LANCIA

LANCIA k

Volume 4

Workshop
Manual

COPYRIGHT FIAT AUTO

The reproduction, even partial, of the text and illustrations is prohibited.

The information contained in this publication is purely indicative and could be out of date following modifications made by the Manufacturer, at any time, for technical or commercial reasons or in order to conform to legal requirements in the various countries.

Fiat Auto S.p.A.
D.M.C. - M.P.S.
Servizi Post Vendita - Tecnologie Assistenziali
Largo Senatore G.Agnelli, 5 - 10040 Volvera - **To (Italia)**
Publication no. 506.475/23 - Maggio 1998 - **400**
Printed by Satiz S.p.A. - Turin (Italy)
order no. 60445996

TECHNICAL SERVICE MANUAL COMPOSITION

At present, July 1999, the **LANCIA k 4th volume** manual is composed as follows:

Print N°	Sections	Page Nos	Versions	Notes
506.475/23 (V/98)	**00**	1÷109	98 range versions	Technical data
	10	1÷56	1998 20V turbo	Engine: Fuel system
		1÷28	2387 JTD	Engine: Fuel system
	33	1÷3	98 range versions	Brakes: ABS0Bosch 5.3 anti-lock brakes with EBD-active sensors
	55	1÷8	98 range versions	Electrical equipment: Radio navigation system-Air Bag
		1÷71	98 range versions	Electrical equipment: Wiring diagrams
506.475/24 (IX/98)	**10**	1÷17	1998 20V turbo 98 range versions	Engine: R.R. on vehicle
	21 - 27	1÷29	2959 V6 24V 98 range versions	ZF4HP 20 automatic transmission and differential: Composition and operation
	33	1÷4	98 range versions	Brake: Anti-lock brakes update
		1÷5	1998 20V turbo 2959 V6 24V	Brakes: Brembo brake calipers
	55	1÷94	98 range versions	Electrical equipment: Radio navigation system - Side Bag - Exhaust gas headlamps
		1÷220	98 range versions	Electrical equipment: Wiring diagrams
506.475/25 (II/99)	**00**	3÷22 31÷32 35÷36 49÷52 63÷64 67÷74 77÷80 83÷120	98 range versions	Technical data: Update
		1÷12	1998 20V 2959 V6 24V 98 Update	Technical data

Copyright Fiat Auto

Print N°	Sections	Page Nos	Versions	Notes
506.475/25 (II/99)	10	Index 1÷2 7÷8 13÷18 33÷34 55÷56	1998 20V turbo 98 range	Fuel system: Update
	21 - 27	29÷40	2959 V6 24V 98 range	ZF4HP20 automatic transmission and differential: Overhauling and adjustments
	50	1÷19	98 range versions	Auxiliary units: Automatic climate control system
	55	69÷120	98 range versions	Update: Electrical equipment
		132/1÷132/24	98 range versions	Wiring diagrams: Update
506.475/28 (VII/99)	21 - 27	29÷59	2959 V6 24V 98 range versions	ZF4HP20 automatic transmission and differential: Operations on vehicle
		1÷4	1998 20V 98 Update 2446 20V 99 Update	Aisin automatic transmission and differential: Variants for 98 - 99 update

Print N°	Sections	Page Nos.	Versions	Notes
506.475/25 (II/99)	10	Index 1-2 7-8 13-18 33-34 55-56	1998 20V turbo 98 Range	Fuel system: Update
	21 - 27	29-40	2959 V6 24v 98 Range	ZF4HP20 automatic transmission and differential: Overhauling and adjustments
	50	1÷19	98 range versions	Auxiliary units: Automatic climate control system
	55	69÷120	98 range versions	Update: Electrical equipment
		132/1-132/24	98 range versions	Wiring diagrams: Update
506.475/28 (VII/99)	21 - 27	29-59	2959 V6 24v 98 range versions	ZF4HP20 automatic transmission and differential: Operations on vehicle
		1-4	1998 20v 98 Update 2446 20v 99 Update	Aisin automatic transmission and differential: Variants for 98 - 99 update
506.475/30 (V/2000)	21 - 27	57-60	2959 V6 24v 99 Update	Update: automatic transmission and differential

SERVICE MANUAL COMPOSITION

At present, January 1999, the **LANCIA k 4th volume** manual is composed as follows:

Print N°	Sections	Page Nos.	Versions	Comments
506.475/23 (V/98)	00	1-109	98 range versions	Technical Data
	10	1-56	1998 20V turbo	Engine: Fuel system
		1-28	2387 JTD	Engine: Fuel system
	33	1-3	98 range versions	Brakes: Bosch 5.3 ABS anti-lock brake with EBD - Active sensors
	55	1-8	98 range versions	Electrical equipment: Radio navigation system - Air Bag
		1-71	98 range versions	Electrical equipment: Wiring diagrams
506.475/24 (IX/98)	10	1-17	1998 20V turbo 98 range versions	Engine: R.R. on vehicle
	21 - 27	1-29	2959 V6 24V 98 range versions	ZF4HP Automatic gearbox and differential: Composition and operation
	33	1-4	98 range versions	Brakes: Anti-lock brakes up-date
		1-5	1998 20V turbo 2959 V6 24V	Brakes: Brembo brake calipers
	55	1-94	98 range versions	Electrical equipment: Radio navigation system - Side Bag - Exhaust gas headlamps
		1-220	98 range versions	Electrical equipment: Wiring diagrams
506.475/25 (II/99)	00	3-22 31-32 35-36 49-52 63-64 67-74 77-80 83-120	98 range versions	Technical data: Update
		1-12	1998 20V 2959 V6 24V 98 Update	Technical Data

Copyright by Fiat Auto

Print N°	Sections	Page Nos.	Versions	Comments
506.475/25 (II/99)	10	Index 1-2 7-8 13-18 33-34 55-56	1998 20V turbo 98 range	Fuel system: Update
	21 - 27	29-40	2959 V6 24V 98 range	ZF4HP20 automatic gearbox and differential: Overhauls and adjustments
	50	1-19	98 range versions	Auxiliary units: Automatically operated climate control system
	55	69-120	98 range versions	Update: Electrical equipment
		132/1-132/24	98 range versions	Electrical equipment wiring diagrams: Update

WORKSHOP MANUAL COMPOSITION

As of September 1998, the **LANCIA k manual, volume 4** is made up as follows:

Publication no.	Sections	Page numbers	Versions	Notes
506.475/23 (V/98)	**00**	1-109	1998 range versions	Technical data
	10	1-56	1998 20V turbo	Engine: Fuel system
		1-28	2387 JTD	Engine: Fuel system
	33	1-3	1998 range versions	Braking system: Bosch 5.3 anti-lock braking system (ABS) with EBD - Active sensors
	55	1-8	1998 range versions	Electrical equipment: navigation system - Air Bag
		1-71	1998 range versions	Electrical equipment: Wiring diagrams
506.475/24 (IX/98)	**10**	1-17	1998 20V turbo	Engine: R&R on vehicle
	21-27	1-29	2959 V6 24V	Automatic transmission and differential ZF 4HP20: Components and operation
	33	1-4	All versions	Braking system: Antilock braking system update
		1-5	1998 20V turbo 2959 V6 24v	Braking system: Brembo brake calipers
	55	1-94	All versions	Electrical equipment: Navigation system - Side Bag -Gas discharge headlamps
		1-220	All versions	Electrical equipment: Wiring diagrams

Copyright Fiat Auto

Lancia K Service Manual 4th volume
Operations on vehicle relating to the automatic transmission for the 2959 V6 24v version ('98 range) and automatic transmission variants for the 1998 20v - 2446 20v versions (98 - 99 update)
Print no. 506.475/28 – (VII/1999) - order n° *604.46.958*

Update the manual, as follows:
- Replace the Summary with the one provided in this booklet;
- Replace the index and pages 29-40 of Section 21-27 relating to the automatic transmission for the 2959 V6 24v version (98 range) with the pages provided in this booklet and insert pages 41-59;
- Inser the index and the pages relating to the variants for the automatic transmission for the 1998 20v - 2446 20v versions (98 - 99 update) in Section 21-27 of the manual after the pages it currently contains.

Lancia K Service Manual 4th volume
Operations on vehicle relating to the automatic transmission for the 2959 V6 24v version ('98 range) and automatic transmission variants for the 1998 20v - 2446 20v versions (98 - 99 update)
Print no. 506.475/28 – (VII/1999) - order n° *604.46.958*

Update the manual, as follows:
- Replace the Summary with the one provided in this booklet;
- Replace the index and pages 29-40 of Section 21-27 relating to the automatic transmission for the 2959 V6 24v version (98 range) with the pages provided in this booklet and insert pages 41-59;
- Inser the index and the pages relating to the variants for the automatic transmission for the 1998 20v - 2446 20v versions (98 - 99 update) in Section 21-27 of the manual after the pages it currently contains.

This manual contains several pages which update the LANCIA k manual 2nd volume.
The pages involve Sec. 55 - Wiring diagrams 96 range versions and should be inserted as described below:

- Replace the Summary for the LANCIA k manual 2nd volume with the one supplied.
- Replace the index for Sec. 55 for the 96 range version wiring diagrams with the one supplied.
- Insert sheet 26/13-26/14 after the wiring diagrams currently in the section.
- Replace the wiring diagrams key with the one supplied.

SERVICE MANUAL COMPOSITION

At present, May 1998, the **LANCIA k 2nd volume** manual is composed as follows:

Print N°	Sections	Page Nos.	Versions	Comments
506.475/01 With binder (IX/94)	**50**	1 ÷ 50	All versions	Automatic climate control Automatic heater
	55	1 ÷ 178	All versions	Electrical equipment
		1 ÷ 143	All versions	Wiring diagrams
	55D	1 ÷ 83	All versions	Electrical equip. fault diagnosis
	70	1 ÷ 82	All versions	Removing-refitting Replacing body panels
506.475/02 (X/94)	**55**	101 ÷ 118	All versions	Electrical equip.: Lancia CODE
		1	All versions	Wiring diagrams index
506.475/04 (XII/94)	**70**	35 ÷ 36	All versions	I.S. 12/94
506.475/05 (III/95)	**70**	35 ÷ 36	All versions	Replacing rear window: update
506.475/07 (V/95)	**55**	31 ÷ 54 117 ÷ 118 175 ÷ 176 176/1 ÷ 176/1	All versions	Infocenter - Lancia CODE Air-Bag: update
		13 ÷ 14		Lancia CODE: wiring diagram update
506.475/09 (VII/95)	**50**	28/1-28/2	All versions	I.S. 6/95
506.475/11 (XI/95)	**55**	3 - 3/1 3/2 - 4	1998 20V 2446 20V 2387 TD	I.S. 11-12/95
	70	34/1-34/2	All versions	

Cont'

Copyright by Fiat Auto

Print N°	Sections	Page Nos.	Versions	Comments
506.475/08 (IV/96)	**55**	117-117/1 117/2-117/3 117/4-118	All versions	Lancia CODE emergency starting procedure with accelerator pedal (96 range)
506.475/14 (VI/96)	**55**	18	All versions	Update: electrical equipment
		1÷17	96 range versions	Radiofrequency alarm
		1÷43	All versions	Wiring diagrams update
	55	34/1-34/2 72/1	All versions	Update: fitting front door hinges and sticking interior rear view mirror support plate
506.475/16 (VIII/96)	**50**	19÷20	All versions	Update
	55	176/3÷176/6	All versions	Update: Passenger Air Bag - New Air Bag
		23÷24 29÷32	All versions	Wiring diagrams update
		1÷30	96 range versions	Wiring diagrams
506.475/18 (X/96)	**55**	53÷54	All versions	Update: Infocenter
	70	32/1	All versions	Replacing glove compartment flap lock barrel
506.475/13 (XII/96)	**55**	Index 26/1÷26/4 29	96 range versions	Wiring diagrams update: Radio phone
506.475/19 (VI/97)	**55**	53÷54	All versions	Update: Infocenter
		79÷80 80/1		Update: Headlamp alignment
		26/5÷26/10 29	96 range versions	Update: Wiring diagrams
	70	83÷84	All versions	Update: Sound insulation panels
506.475/20 (XI/97)	**55**	57÷58	All versions	Update: I.G.E. control unit
		Index 26/11÷26/12	96 range versions	Update: Wiring diagrams

Cont'

Print N°	Sections	Page Nos.	Versions	Comments
506.475/22 (II/98)	**55**	147 ÷ 176	All versions	Update: Air-Bag
506.475/23 (V/98)	**55**	Index 26/13 ÷ 26/14	96 range versions	Update: Wiring diagrams

Copyright by Fiat Auto

SERVICE MANUAL COMPOSITION

At present, May 1998, the **LANCIA k 4th volume** manual is composed as follows:

Print N°	Sections	Page Nos.	Versions	Comments
506.475/23 (V/98)	**00**	1 ÷ 109	98 range versions	Technical data
	10	1 ÷ 56	1998 20V turbo	Engine: Fuel system
		1 ÷ 28	2387 JTD	Engine: Fuel system
	33	1 ÷ 3	98 range versions	Brakes: Anti-lock brakes ABS-- Bosch 5.3 with EBD - Active sensors
	55	1 ÷ 8	98 range versions	Electrical equipment Radio-navigation system - Air Bag
		1 ÷ 71	98 range versions	Electrical equipment: Wiring diagrams

Copyright by Fiat Auto

page

INTRODUCTION

- Car exterior 1
- Identification data 4
- Performance-Fuel consumption 7
- Weights 14
- Dimensions 18
- Capacities 20
- Characteristics of Fiat Lubricant products 21

TECHNICAL DATA

ENGINES 1998 *20v* 2446 *20v* 1998 *20v turbo*

- Characteristics 22
- Typical curves 23
- Cylinder block/crankcase, crankshaft and associated components 24
- Counter balance shafts 28
- Cylinder head assembly and valve gear components 29
- Lubrication 33
- Cooling system - Fuel system 34
- Fuel system 35
- Supercharging 37

ENGINE 2959 V6 *24v*

- Characteristics 38
- Typical curves 39
- Cylinder block/crankcase, crankshaft and associated components 40
- Cylinder head assembly and valve gear components 44
- Lubrication 48
- Cooling system - Fuel system 49
- Fuel system 50

ENGINE 2387 *JTD*

- Characteristics 52
- Typical curves 53
- Cylinder block/crankcase, crankshaft and associated components 54
- Cylinder head assembly and valve gear components 58
- Counter balance shafts 61
- Lubrication 62
- Cooling system - Fuel system 63
- Fuel system 64
- Supercharging 65

page

CLUTCH 66

GEARBOX AND DIFFERENTIAL 67

AUTOMATIC TRANSMISSION – DIFFERENTIAL (AISIN) 69

AUTOMATIC TRANSMISSION – DIFFERENTIAL (Z.F.) 70

BRAKING SYSTEM 71

STEERING 72

WHEELS 73

FRONT SUSPENSION 75

REAR SUSPENSION 76

ELECTRICAL EQUIPMENT 78

- Starting 80
- Recharging 82
- Electronic injection/ignition 84

SPECIAL TOOLS 86

TIGHTENING TORQUES 100

Copyright by Fiat Auto

COPYRIGHT FIAT AUTO

The reproduction, even partial, of the text and illustrations is prohibited.

The information contained in this publication is purely indicative and could be out of date following modifications made by the Manufacturer, at any time, for technical or commercial reasons or in order to conform to legal requirements in the various countries.

Fiat Auto S.p.A.
D.M.C. - M.P.S.
Servizi Post Vendita - Tecnologie Assistenziali
Largo Senatore G.Agnelli, 5 - 10040 Volvera - To (Italia)
Publication no. 506.475/23 - Maggio 1998 - 400
Printed by Satiz S.p.A. - Turin (Italy)
order no. 60445996



P3U01LA01

3/4 front view

Copyright by Fiat Auto

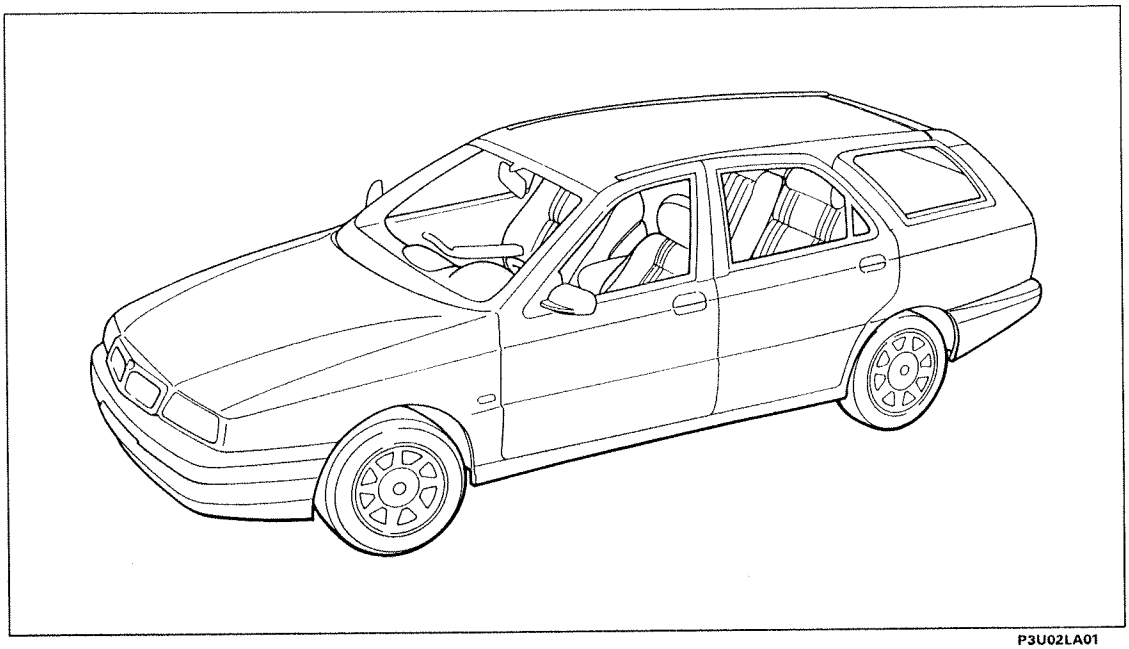

P3U02LA01

3/4 front view

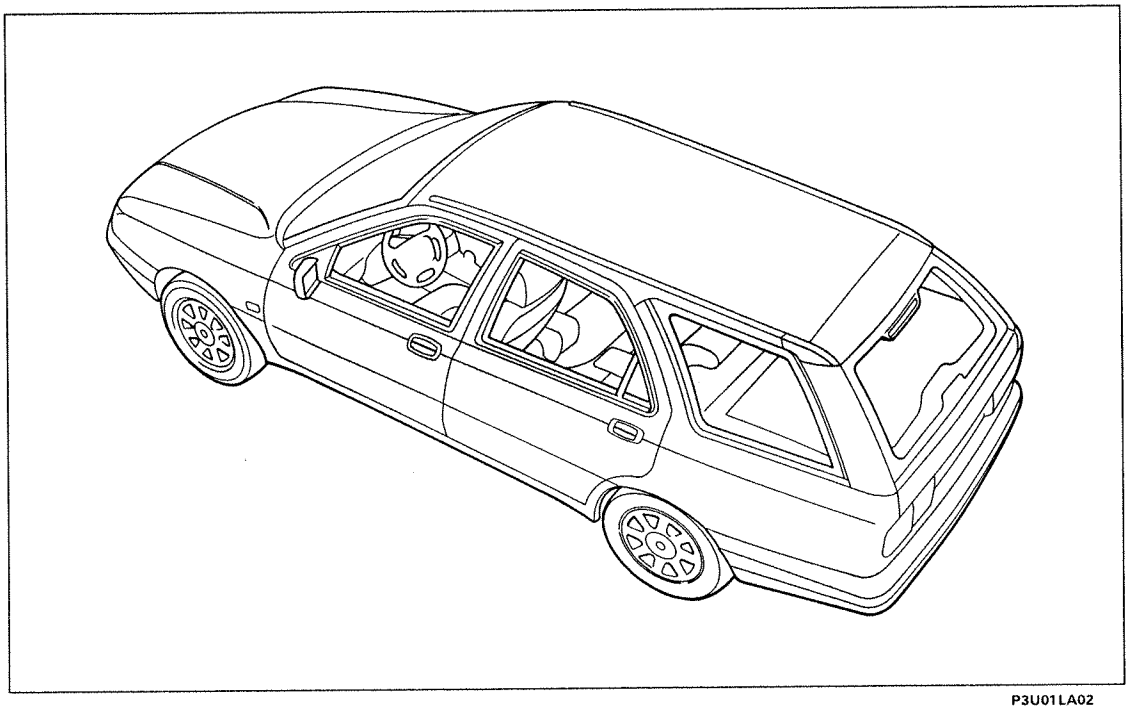

P3U01LA02

3/4 rear view

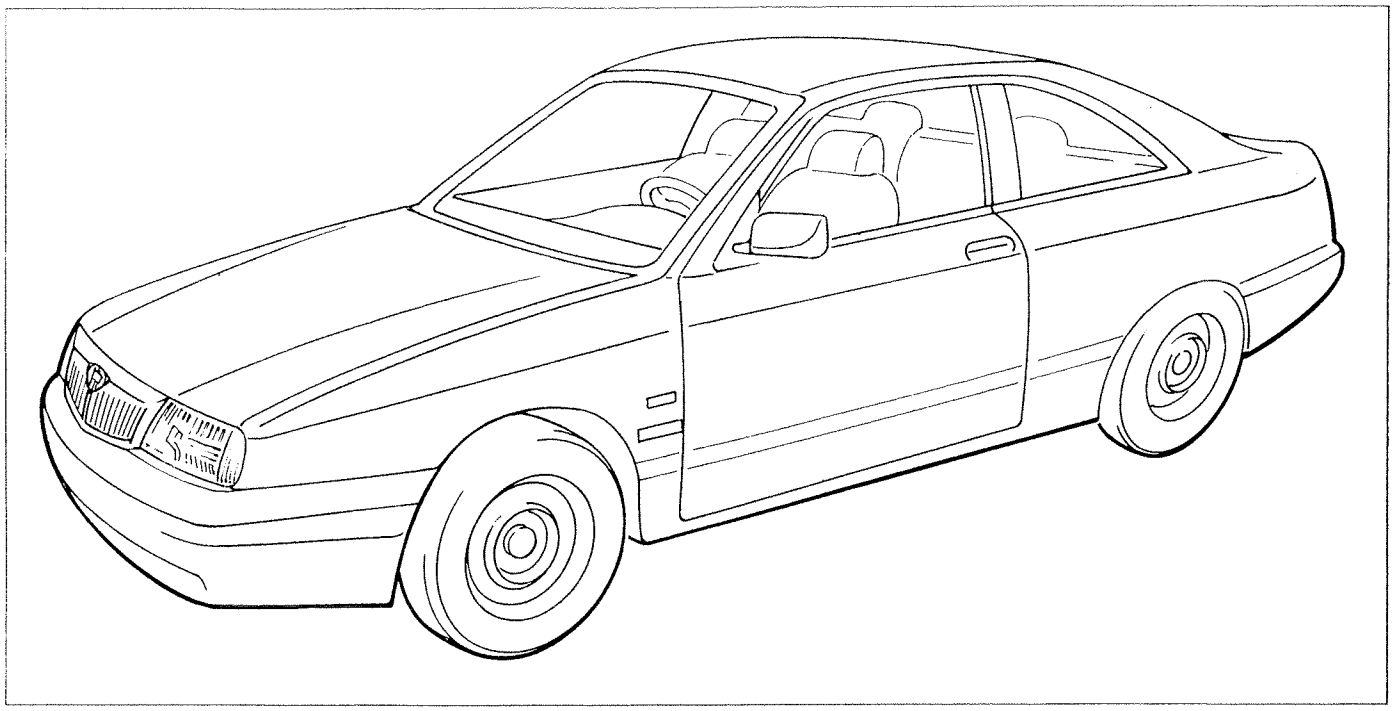

P3U03LA01

3/4 front view

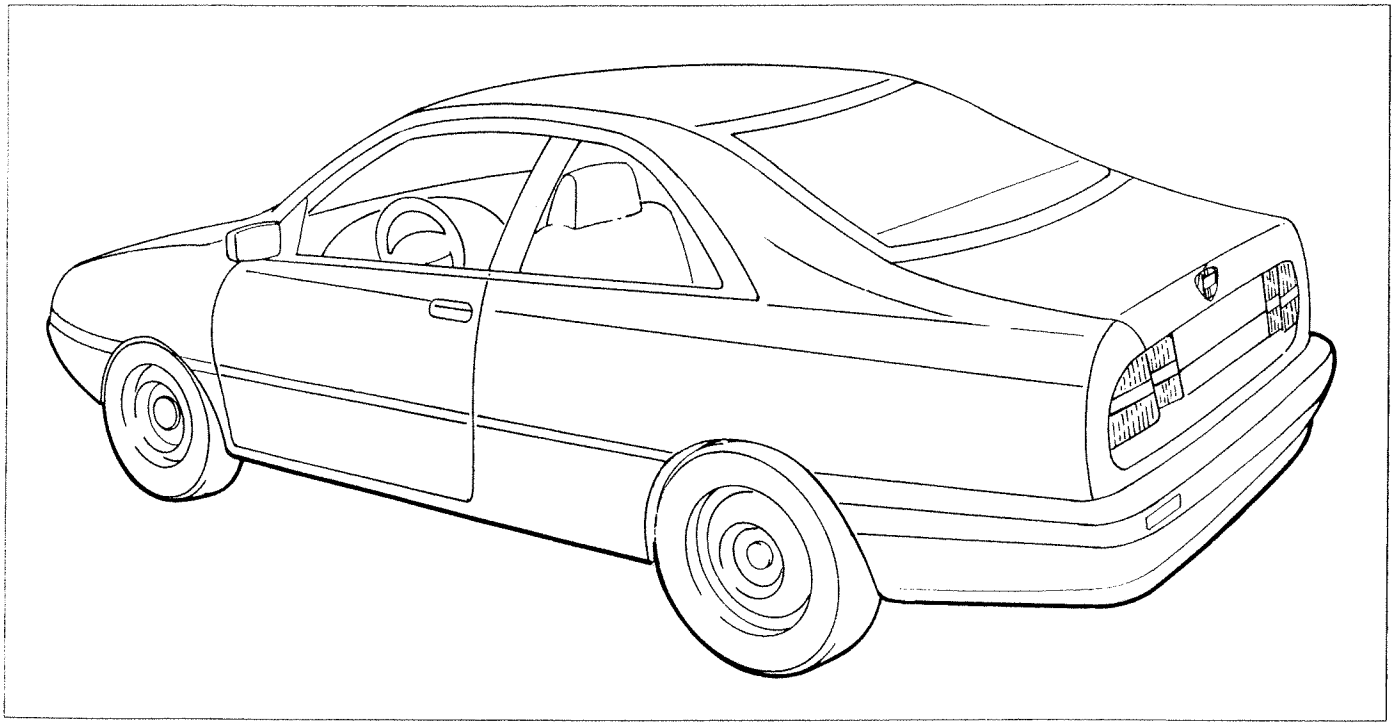

P3U03LA02

3/4 rear view

Copyright by Fiat Auto

	CHASSIS	ENGINE	VERSION	GEARBOX	
			SALOON	1 3 5 / 2 4 6	
1998 20v Comfort Drive	ZLA 838.000	838 A6.000	838 AG 1AA 00	●	
1998 20v Power Drive			838 AG 1AA 00B	●	
1998 20v			838 AG 11A 01		●
2446 20v		838 A2.000	838 AC 1AA 03	●	
			838 AC 11A 15		●
1998 20v turbo		175 A3.000	838 AM 1AA 19	●	
2959 V6 24v		838 B.000	838 AD 1AA 04	●	
			838 AD 11A 05		●
2387 JTD Comfort Drive (■)		838 A8.000	838 AL 1AA 17	●	
2387 JTD Power Drive					

(■) Version for specific markets (France)

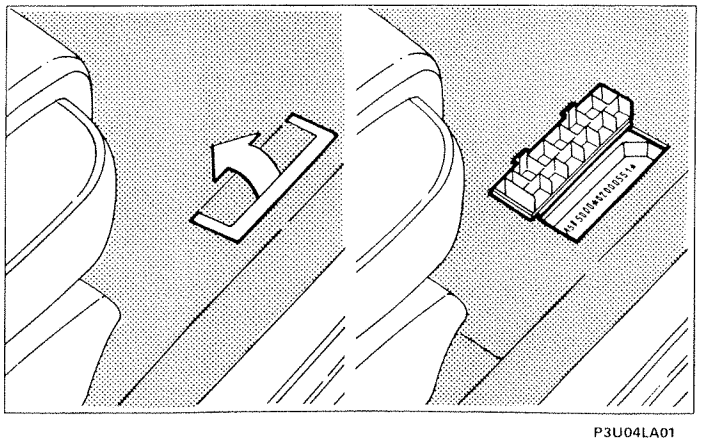

P3U04LA01

Vehicle type identification code and chassis manufacture number

Stamped on the floor panel of the passenger compartment, near the right front seat.
Access is gained by lifting the appropriate flap.

	CHASSIS	ENGINE	VERSION			GEARBOX	
			SW	COUPÉ	CODE	1 3 5 / 2 4 R	
1998 20v Comfort Drive	ZLA 838.000	838 A6.000	●		838 AG 1AA 00	●	
1998 20v Power Drive			●		838 AG 1AA 00B	●	
2446 20v		838 A2.000	●		838 BC 1AA 09	●	
				●	838 CC 1AA 13	●	
			●		838 BC 11A 16		●
1998 20v Turbo		175 A3.000	●		838 BM 1AA 20	●	
				●	838 CM 1AA 21	●	
2959 V6 24v		838 B.000	●		838 BD 11A 10		●
				●	838 CD 11A 14		●
2387 JTD Comfort Drive (■)		838 A8.000	●		838 BL 1AA 18	●	
2387 JTD Power Drive							

(■) Version for specific markets (France)

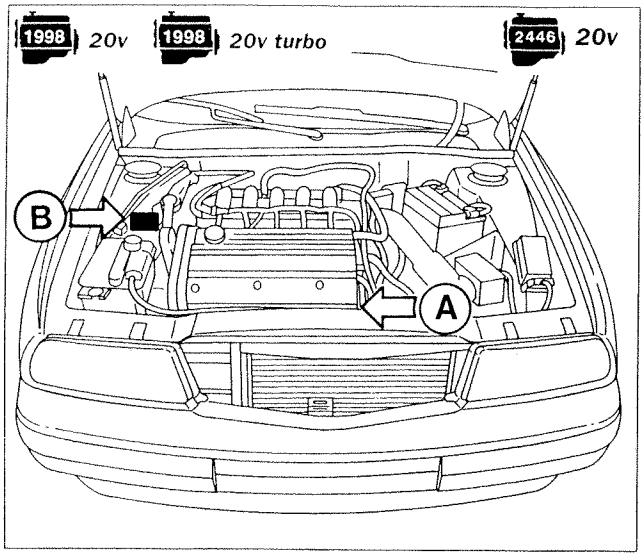

P3U06LA01

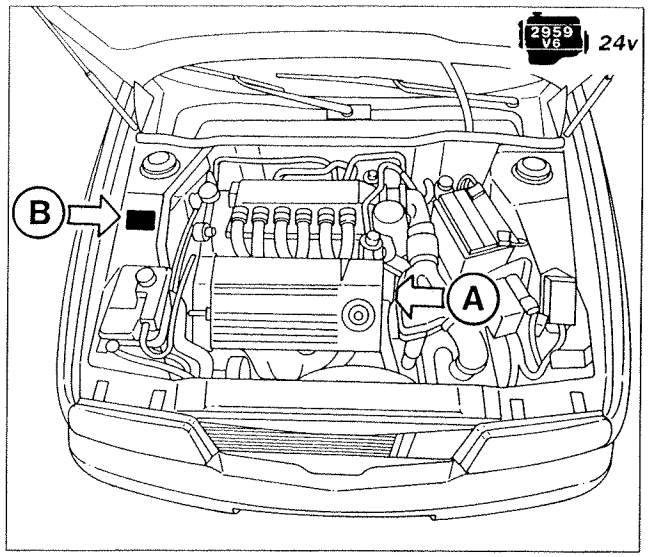

P3U06LA02

A Engine type and number

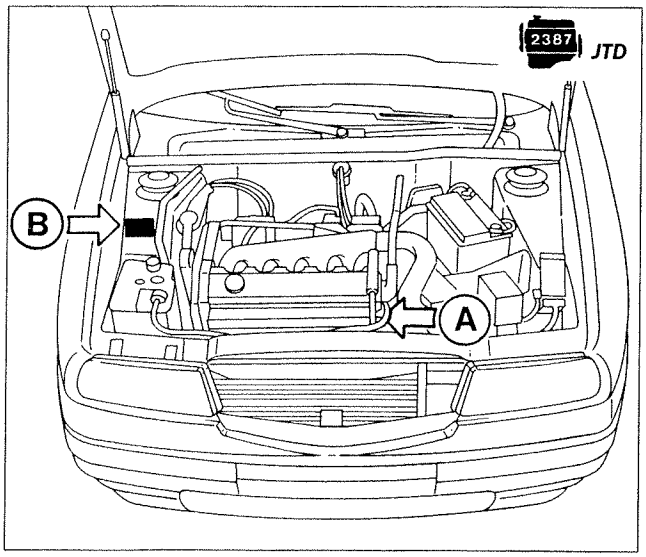

P3U06LA03

B V.I.N. Plate (EEC regulations)

A. Name of manufacturer
B. Homologation number
C. Vehicle type identification code
D. Chassis Manufacture Number
E. Maximum authorized weight of vehicle fully laden
F. Maximum authorized weight of vehicle fully laden plus tow
G. Maximum authorized weight on first axle (front)
H. Maximum authorized weight on second axle (rear)
I. Engine type
L. Bodywork version code
M. Spares number
N. Correct value of smoke absorption coefficient (Diesel engines only)

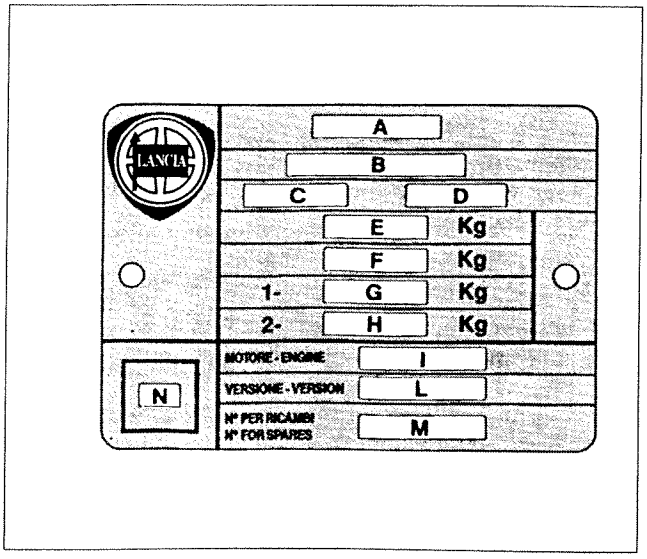

P3U06LA04

ENGINE TYPE	1998 20v	2446 20v	1998 20v turbo
GEARBOX	1 3 5 / 2 4 R	1 3 5 / 2 4 R	1 3 5 / 2 4 R
Speed kph (average load) — 1	60 (○) 54 (●)	56	51
Speed kph (average load) — 2	101 (○) 92 (●)	94	85
Speed kph (average load) — 3	167 (○) 136 (●)	139	141
Speed kph (average load) — 4	212 (○) 178 (●)	183	198
Speed kph (average load) — 5	197 (○) 212 (●)	215	243
Speed kph (average load) — R	64 (○) 58 (●)	60	54
Maximum climable gradient fully laden		37	
Fuel consumption directive 93/116/CE (litres/100 km) — **Urban**	13,8 (○) 14,8 (●)	14,4	17,5
Fuel consumption directive 93/116/CE (litres/100 km) — **Extra-urban**	7,3 (○) 8,3 (●)	7,9	8,9
Fuel consumption directive 93/116/CE (litres/100 km) — **Combined**	9,7 (○) 10,7 (●)	10,3	12,1
CO_2 exhaust emissions (g/km)	230 (○) 255 (●)	245	288

(●) Power Drive Version
( ) Comfort Drive Version

The fuel consumption figures in accordance with directive 93/116/CE have been defined during homologation tests which involve:
- an urban cycle which includes a cold start followed by a varied urban cycle simulation.
- an extra-urban cycle which includes frequent acceleration in all gears simulating normal out of town usage. The speed varies between 0 and 120 kph.
- The combined average consumption includes 37% of the urban cycle and 63% of the extraurban cycle.

The type of journey, traffic conditions, driving styles, atmospheric conditions, trim level/equipment/accessories, whether a roof rack is fitted, the presence of special equipment and the general state of the vehicle can lead to fuel consumption figures which differ from those obtained through the above mentioned procedures.
The CO_2 exhaust emissions (in g/km) are measured during the average combined cycle

00.0

ENGINE TYPE	2959 V6 24v	2387 JTD
GEARBOX	1 3 5 / 2 4 R	1 3 5 / 2 4 R

Speed kph (average load) 	1	66	32-37 (■)
	2	104	55-62 (■)
	3	152	91-103 (■)
	4	200	129-144 (■)
	5	225	202
	R	66	34-40 (■)
Maximum climable gradient fully laden		37	
Fuel consumption directive 93/116/CE (litres/100 km) 	**Urban**	17,5	10,2-11,2 (■)
	Extra-urban	8,9	6,2-6,4 (■)
	Combined	12,1	7,7-8,2 (■)
CO_2 exhaust emissions (g/km)		288	203

(■) Version for specific markets

The fuel consumption figures in accordance with directive 93/116/CE have been defined during homologation tests which involve:
- an urban cycle which includes a cold start followed by a varied urban cycle simulation.
- an extra-urban cycle which includes frequent acceleration in all gears simulating normal out of town usage. The speed varies between 0 and 120 kph.
- The combined average consumption includes 37% of the urban cycle and 63% of the extraurban cycle.

The type of journey, traffic conditions, driving styles, atmospheric conditions, trim level/equipment/accessories, whether a roof rack is fitted, the presence of special equipment and the general state of the vehicle can lead to fuel consumption figures which differ from those obtained through the above mentioned procedures.
The CO_2 exhaust emissions (in g/km) are measured during the average combined cycle

ENGINE TYPE	1998 20v	2446 20v	2959 V6 24v
GEARBOX			
Speed kph (average load) — 1st	-	-	-
2nd	-	-	-
3rd	-	-	-
4th	max 210	max 215	max 220
5th	-	-	-
R	-	-	-
Max. climable gradient fully laden	37		
Fuel consumption directive 93/116/CE (litres/100 km) — **Urban**	14,9	15,4	17,5
Extra-urban	8,8	9,0	9,7
Combined	11,0	11,3	12,6
CO_2 exhaust emissions (g/km)	263	270	300

The fuel consumption figures in accordance with directive 93/116/CE have been defined during homologation tests which involve:
- an urban cycle which includes a cold start followed by a varied urban cycle simulation.
- an extra-urban cycle which includes frequent acceleration in all gears simulating normal out of town usage. The speed varies between 0 and 120 kph.
- The combined average consumption includes 37% of the urban cycle and 63% of the extraurban cycle.

The type of journey, traffic conditions, driving styles, atmospheric conditions, trim level/equipment/accessories, whether a roof rack is fitted, the presence of special equipment and the general state of the vehicle can lead to fuel consumption figures which differ from those obtained through the above mentioned procedures.
The CO_2 exhaust emissions (in g/km) are measured during the average combined cycle

Copyright by Fiat Auto

ENGINE TYPE	1998 20v	2446 20v
GEARBOX	1 3 5 / 2 4 R	1 3 5 / 2 4 R
Speed kph (average load) — 1st	54	56
2nd	92	94
3rd	136	139
4th	178	183
5th	205	212
R	58	60
Max. climable gradient fully laden	36	
Fuel consumption directive 93/116/CE (litres/100 km) — **Urban**	15,0	15,3
Extra-urban	8,4	8,4
Combined	10,8	11,0
CO_2 exhaust emissions (g/km)	258	263

The fuel consumption figures in accordance with directive 93/116/CE have been defined during homologation tests which involve:
- an urban cycle which includes a cold start followed by a varied urban cycle simulation.
- an extra-urban cycle which includes frequent acceleration in all gears simulating normal out of town usage. The speed varies between 0 and 120 kph.
- The combined average consumption includes 37% of the urban cycle and 63% of the extraurban cycle.

The type of journey, traffic conditions, driving styles, atmospheric conditions, trim level/equipment/accessories, whether a roof rack is fitted, the presence of special equipment and the general state of the vehicle can lead to fuel consumption figures which differ from those obtained through the above mentioned procedures.
The CO_2 exhaust emissions (in g/km) are measured during the average combined cycle

		ENGINE TYPE	1998 20v turbo	2387 JTD
		GEARBOX	1 3 5 / 2 4 R	1 3 5 / 2 4 R
Speed kph (average load) 		1	52	32-37 (■)
		2	87	55-62 (■)
		3	143	91-103 (■)
		4	201	129-144 (■)
		5	235	200
		R	55	34-40 (■)
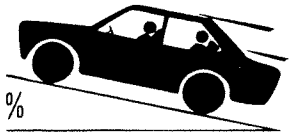	Max. climable gradient fully laden		36	37
Fuel consumption directive 93/116/CE (litres/100 km) 	**Urban**		15,0	10,3-11,6 (■)
	Extra-urban		8,3	6,3-6,6 (■)
	Combined		10,8	7,6-8,4 (■)
CO_2 exhaust emissions (g/km)			256	207-208,8 (■)

(■) Version for specific markets (France)

The fuel consumption figures in accordance with directive 93/116/CE have been defined during homologation tests which involve:
- an urban cycle which includes a cold start followed by a varied urban cycle simulation.
- an extra-urban cycle which includes frequent acceleration in all gears simulating normal out of town usage. The speed varies between 0 and 120 kph.
- The combined average consumption includes 37% of the urban cycle and 63% of the extraurban cycle.

The type of journey, traffic conditions, driving styles, atmospheric conditions, trim level/equipment/accessories, whether a roof rack is fitted, the presence of special equipment and the general state of the vehicle can lead to fuel consumption figures which differ from those obtained through the above mentioned procedures.
The CO_2 exhaust emissions (in g/km) are measured during the average combined cycle

Copyright by Fiat Auto

ENGINE TYPE	2959 V6 24v	2446 20v
GEARBOX		
Speed kph (average load) — 1	–	–
2	–	–
3	–	-
4	max 218	max 210
5	–	–
R	–	–
Max. climable gradient fully laden	36	
Fuel consumption directive 93/116/CE (litres/100 km) — **Urban**	17,6	15,6
Extra-urban	9,8	9,2
Combined	12,7	11,6
CO_2 exhaust emissions (g/km)	304	275

The fuel consumption figures in accordance with directive 93/116/CE have been defined during homologation tests which involve:

- an urban cycle which includes a cold start followed by a varied urban cycle simulation.
- an extra-urban cycle which includes frequent acceleration in all gears simulating normal out of town usage. The speed varies between 0 and 120 kph.
- The combined average consumption includes 37% of the urban cycle and 63% of the extraurban cycle.

The type of journey, traffic conditions, driving styles, atmospheric conditions, trim level/equipment/accessories, whether a roof rack is fitted, the presence of special equipment and the general state of the vehicle can lead to fuel consumption figures which differ from those obtained through the above mentioned procedures.
The CO_2 exhaust emissions (in g/km) are measured during the average combined cycle

	ENGINE TYPE	1998 20v turbo	2446 20v	2959 V6 24v
	GEARBOX	1 3 5 / 2 4 R	1 3 5 / 2 4 R	
Speed kph (average load)	1	52	56	-
	2	87	94	-
	3	143	139	-
	4	201	183	220
	5	243	218	-
	R	58	60	-
Max. climable gradient fully laden (%)		37		
Fuel consumption directive 93/116/CE (litres/100 km)	**Urban**	14,5	15,0	17,4
	Extra-urban	8,0	8,2	9,4
	Combined	10,7	10,7	12,3
CO_2 exhaust emissions (g/km)		247	255	294

The fuel consumption figures in accordance with directive 93/116/CE have been defined during homologation tests which involve:

- an urban cycle which includes a cold start followed by a varied urban cycle simulation.
- an extra-urban cycle which includes frequent acceleration in all gears simulating normal out of town usage. The speed varies between 0 and 120 kph.
- The combined average consumption includes 37% of the urban cycle and 63% of the extraurban cycle.

The type of journey, traffic conditions, driving styles, atmospheric conditions, trim level/equipment/accessories, whether a roof rack is fitted, the presence of special equipment and the general state of the vehicle can lead to fuel consumption figures which differ from those obtained through the above mentioned procedures.
The CO_2 exhaust emissions (in g/km) are measured during the average combined cycle

Copyright by Fiat Auto

WEIGHTS (in kg)

ENGINE TYPE	1998 20v turbo	2959 V6 20v		2387 JTD
GEARBOX	1 3 5 / 2 4 R	1 3 5 / 2 4 R		1 3 5 / 2 4 R
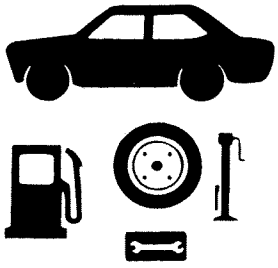	1500	1510	1540	1510
+500 = 	2000	2010	2040	2020
Max. permissible loads on the axles ■ 	1180	1180	1180	1180
	1180	1180	1180	1180
Maximum permissible load on the roof	100	100	100	100
Load on the tow hook (trailer with braking system)	90	90	90	90
 Trailer without braking system	500	500	500	500
Trailer with braking system	1500	1500	1500	1500

■ Loads which must never be exceeded

NOTE FOR VERSIONS WITH ACCESSORIES: in the presence of special equipment (non standard air conditioner, sun roof, trailer towing device), the empty weight increases and therefore the carrying capacity may decrease, in relation to the maximum permissible loads.

ENGINE TYPE	1998 20v		2446 20v	
GEARBOX	1 3 5 / 2 4 R		1 3 5 / 2 4 R	1 3 5 / 2 4 R

WEIGHTS (in kg)

		1440	1470	1450	1480
	+500 = 	1940	1970	1950	1980
Max. permissible loads on the axles ■		1180	1180	1180	1180
		1180	1180	1180	1180
Maximum permissible load on the roof		100	100	100	100
Load on the tow hook (trailer with braking system)		90	90	90	90
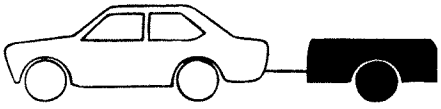	Trailer without braking system	500	500	500	500
	Trailer with braking system	1500	1500	1500	1500

■ Loads which must never be exceeded

NOTE FOR VERSIONS WITH ACCESSORIES: in the presence of special equipment (non standard air conditioner, sun roof, trailer towing device), the empty weight increases and therefore the carrying capacity may decrease, in relation to the maximum permissible loads.

Copyright by Fiat Auto

WEIGHTS (in kg)

ENGINE TYPE	1998 20v	2446 20v		1998 20v turbo	2959 V6 24v	2387 JTD
GEARBOX	1 3 5 2 4 R	1 3 5 2 4 R		1 3 5 2 4 R		1 3 5 2 4 R
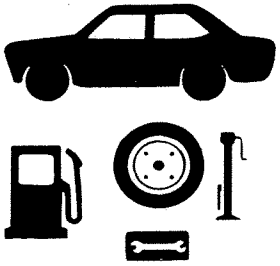	1510	1520	1550	1560	1610	1580
+500 = 	2010	2020	2050	2060	2110	2080
Max. permissible loads on the axles ■ 	1180	1180	1180	1180	1180	1180
	1180	1180	1180	1180	1180	1180
Maximum permissible load on the roof	100	100	100	100	100	100
Load on the tow hook (trailer with braking system)	90	90	90	90	90	90
 Trailer without braking system	500	500	500	500	500	500
Trailer with braking system	1500	1500	1500	1500	1500	1500

■ Loads which must never be exceeded

NOTE FOR VERSIONS WITH ACCESSORIES: in the presence of special equipment (non standard air conditioner, sun roof, trailer towing device), the empty weight increases and therefore the carrying capacity may decrease, in relation to the maximum permissible loads.

ENGINE TYPE	2446 20v turbo	2446 20v	2959 V6 24v
GEARBOX	1 3 5 / 2 4 R	1 3 5 / 2 4 R	

WEIGHTS (in kg)

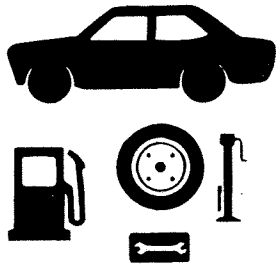		1475	1425	1515
	+500 = 	1975	1925	2015
Max. permissible loads on the axles ■		1160	1160	1160
		1160	1160	1160
Load on the tow hook (trailer with braking system)		90	90	90
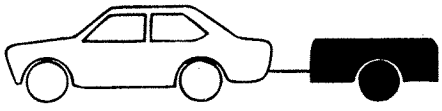	Trailer without braking system	500	500	500
	Trailer with braking system	1500	1500	1500

■ Loads which must never be exceeded

NOTE FOR VERSIONS WITH ACCESSORIES: in the presence of special equipment (non standard air conditioner, sun roof, trailer towing device), the empty weight increases and therefore the carrying capacity may decrease, in relation to the maximum permissible loads.

SALOON

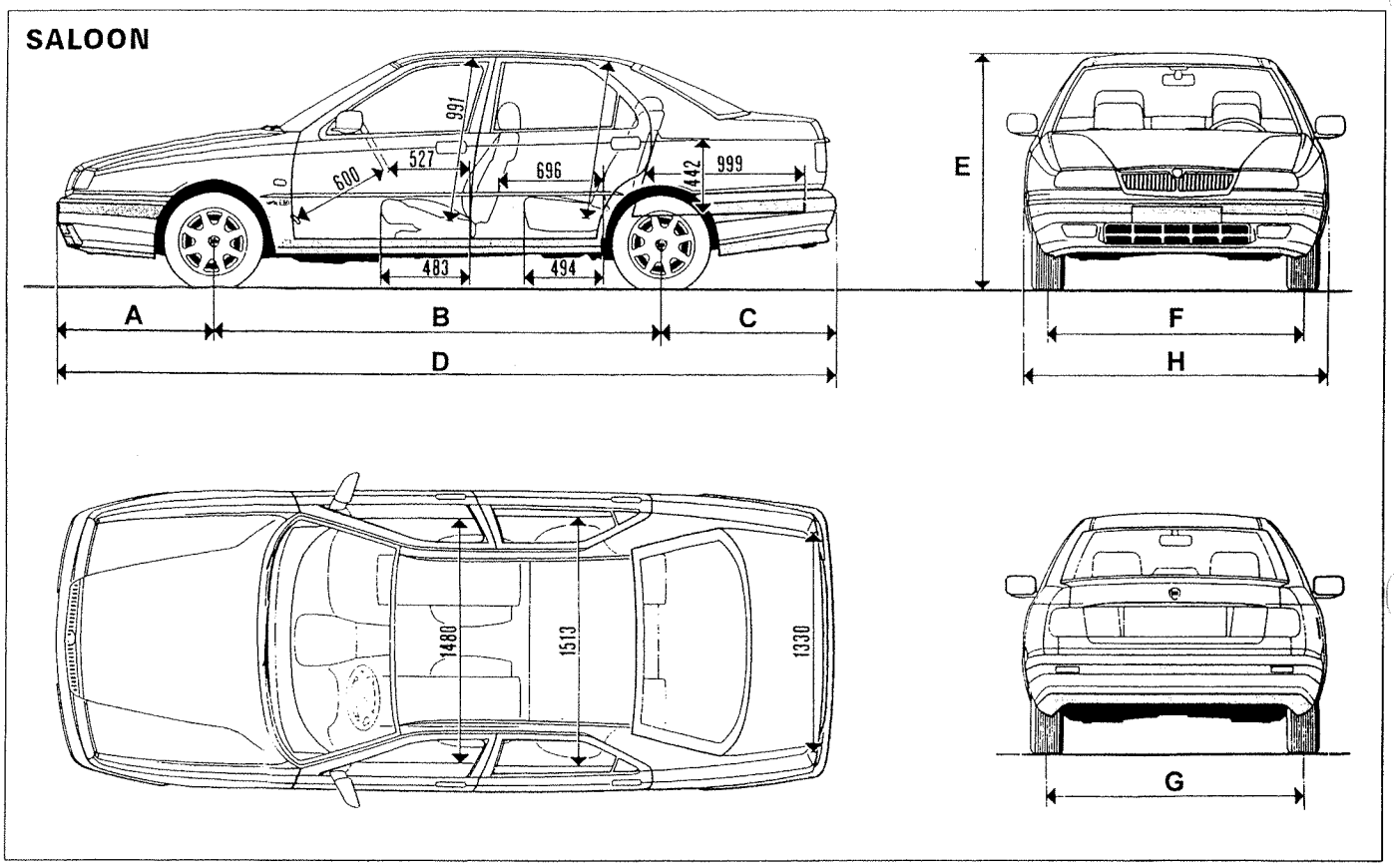

P3U18LA01

SW

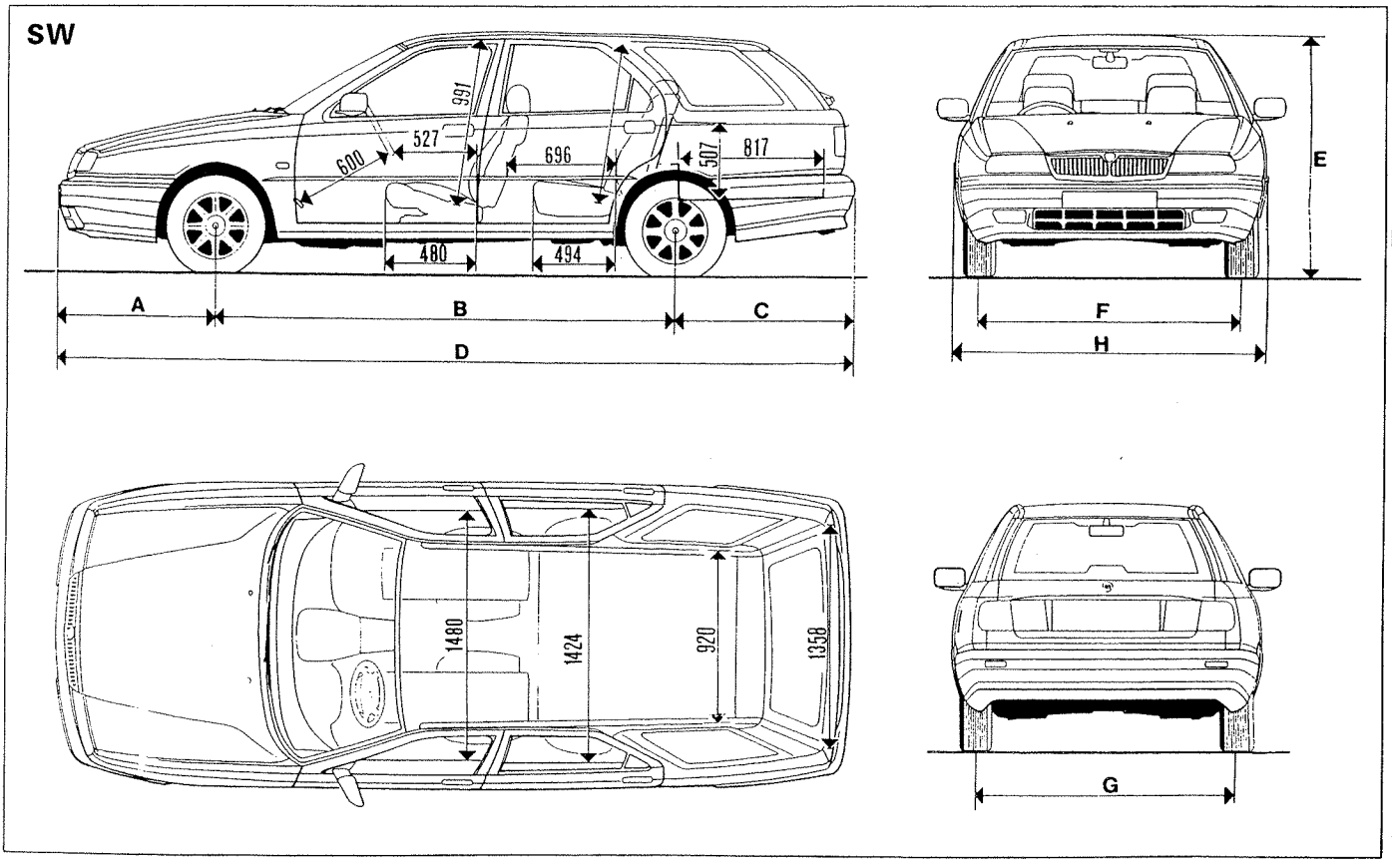

P3U18LA02

COUPÉ

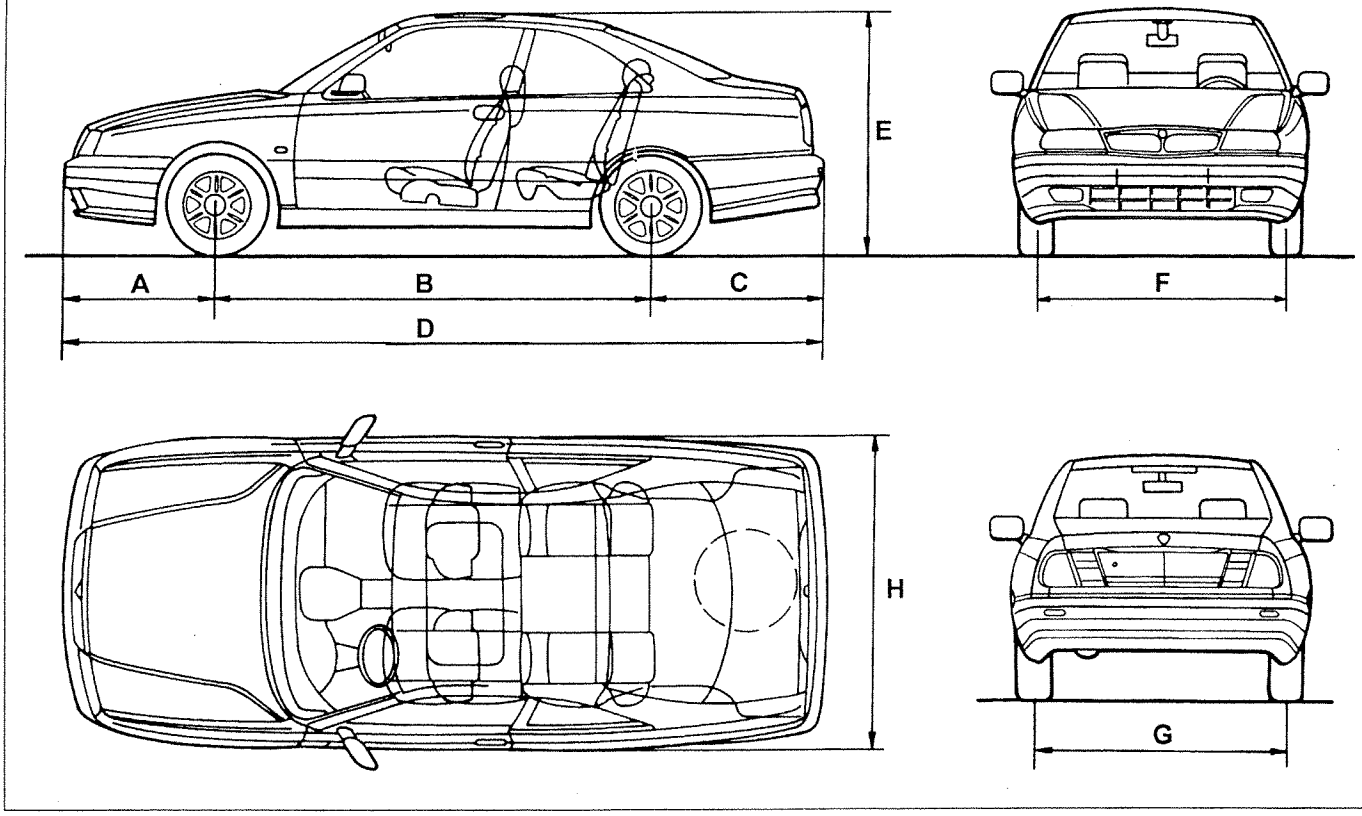

P3U19LA01

DIMENSIONS

		SALOON	SW	COUPÉ
A	Front projection	947		
B	Wheelbase	2700		2580
C	Rear projection	1040		
D	Maximum length	4687		4567
E	Maximum height	1462	1464	1425
F	Front track	1530		1547
G	Rear track	1527		1533
H	Maximum width	1826		1830
Luggage compartment capacity (VDA STANDARDS)		525 dm³	505 dm³	500 dm³

The height E refers to an unladen car

Capacities	Unit		Quantity dm³(l)	Quantity (kg)
Petrol O.R. 95 (●)		1998 20v - 2446 20v 1998 20 v turbo - 2959 V6 24v	70	–
Diesel		2387 jtd	70	–
50% + (▲)	Total capacity of cooling system	1998 20v 2446 20v 1998 20v turbo 2387 jtd	8,3	–
		2959 6V 24v	9	-
Petrol engines: SELENIA 20 K (SAE 10 W/40)	Total capacity	1998 20v - 2446 20v	6,5	5,8
		1998 20v turbo	7	6,25
		2959 V6 24v	7,5	6,7
		2387 td	5,8	5,1
Diesel engines: SELENIA Turbo Diesel (SAE 10 W/40)	Partial capacity (periodic replacement)	1998 20v - 2446 20v 1998 20v turbo	5,4 5*	4,85 4,45*
		2959 V6 24v	6,9 6,5*	6,2 5,85*
		2387 jtd	5,3 5,0*	4,7 4,44*
a = TUTELA ZC 75 SYNTH			a	2	1,80
b = TUTELA GI/A		2959 V6 24v	b	9,1 5**	8,2 4,5**
		1998 20v 2446 20v		7,5 3,0**	6,8 2,7**
a = TUTELA GI/A	a	1998 20v - 2446 20v 1998 20v turbo - 2387 TD	a	-	0,80
		2959 V6 24v		-	1,80
b = TUTELA MRM2	b		b	-	0,080
TUTELA TOP 4 270 °C	Tot. capacity of braking system and hydraulically op. clutch			-	0,5
AREXONS + DP1		3%		8	-
	– 20°C	50%			
	< - 20°C	100%		3	-

(▲) Distilled water
(*) Engine sump only
(**) Periodic replacement
(●) Unleaded petrol only should be used

Name of product	Description International designation	Application
SELENIA 20 K SAE 10 W/40	Semi-synthetic multigrade engine oil. Exceeds specifications ACEA A3-96/CCMC G5 and API SH	Temperature - 25°C ÷ 40°C
VS MAX SAE 15 W/40	Mineral based multigrade engine oil. Exceeds specifications API SG, CCMC-G4 and UNI 20153	Temperature - 15°C ÷ 40°C
SELENIA Turbo Diesel SAE 10 W/40	Semisynthetic, multigrade engine oil. Exceeds specifications ACEA B3-96/CCMC PD2, API CD	Temperature - 25°C ÷ 40°C
VS MAX Diesel SAE 15 W/40	Multigrade, mineral based engine oil. Exceeds specifications API CD, CCMC and UNI 20153	Temperature - 15°C ÷ 40°C
TUTELA ZC 80S	SAE 80W EP oil. Satisfies standards MIL-L-2105 and API GL4	Manual gearboxes and differentials
TUTELA ZC 90	Non EP SAE 80 W/90 oil, for manual gearboxes, containing anti-wear additives.	Gearboxes and non hypoid differentials
TUTELA ZC 75 SYNTH	SAE 75 W EP synthetic oil. Satisfies standards API GL.5 and MIL-L-2105 D	Manual gearboxes and differentials
TUTELA W 90/M DA	Special SAE 80 W/90 EP oil for normal and self-locking differentials. Satisfies standards MIL–L–2105 D and API GL5	Hypoid differentials Self-locking differentials Steering boxes
TUTELA GI/A	"DEXRON II" type oil for automatic transmissions.	Automatic gearboxes Power assisted steering
TUTELA CVT Universal	Oil for continuous variation automatic transmissions.	Continuous variation automatic transmissions
TUTELA JOTA 1	Lithium soap based grease, consistency NLGI = 1	Greasing the vehicle except for components particularly exposed to water requiring special greases
TUTELA MRM2	Water-repellant, lithium soap based grease containing molybdenum disulphide, consistency NLGI = 2	Constant velocity joints
TUTELA MR3	Lithium soap based grease, consistency NLGI= 3	Wheel hub bearings, st. rod, various comps.
TUTELA PLUS 3 (240 °C)	Synthetic fluid, F.M.V.S.S. n° 116 DOT 3 ISO 4925, CUNA NC 956-01	Hydraulic brakes and hyd. op. clutches
TUTELA TOP 4 (270 °C)	Synthetic fluid, F.M.V.S.S. n° 116 DOT 4 ISO 4925, CUNA NC 956-01	Hydraulic brakes and hydraulically op. clutches
K 854	Lithium soap based grease, consistency NLGI = 000, containing molybdenum disulphide	Rack and pinion steering boxes
SP 349	Special grease compatible with brake fluid	Load proportioning valve Load proportioning valve rod bush
Arexons DP1	Mix. of alcohol, H20 & surf. act. agents CUNA NC 956-11	To be used neat or diluted in windscreen washer systems
Paraflu[11]	Monoethylene glycol based anti-freeze for cooling systems, CUNA NC 956 - 16	Cooling circuits Percentage to be used 50% up to - 35°C
Diesel Mix Arexons	Additive for diesel fuel with protective action for diesel engines (to be used at outside temperatures below -10 °C).	To be mixed with diesel fuel (25 cc per 10 litres)

Copyright by Fiat Auto

CHARACTERISTICS

		1998 20v	2446 20v	1998 20v turbo
	Cycle	OTTO 4 stroke		
	Timing	twin overhead camshaft		
	Engine balancing	through 1 counter-balance shaft		
	Type of fuel system	Bosch Motronic M3.1 integrated electronic injection/ignition	Bosch Motronic M3.1 integrated electronic injection/ignition	Bosch Motronic M2.10 integrated electronic injection/ignition
	Number of cylinders	5 in line		
	Cylinder liner (bore) mm	82	83	82
	Stroke mm	75,65	90,4	75,65
	Capacity cc	1998	2446	1998
	Compression ratio	10,4 :1	10 :1	8 :1
	Max power kW (CEE)	114	129	162
	Max power (CV) (CEE)	(155)	(175)	(220)
	Max power rpm	6500	6100	5750
	Max torque daNm (CEE)	18,6	23	31
	Max torque (kgm) (CEE)	(19)	(23,5)	(31,6)
	Max torque rpm	4000	3750	2500

1998 *20v*

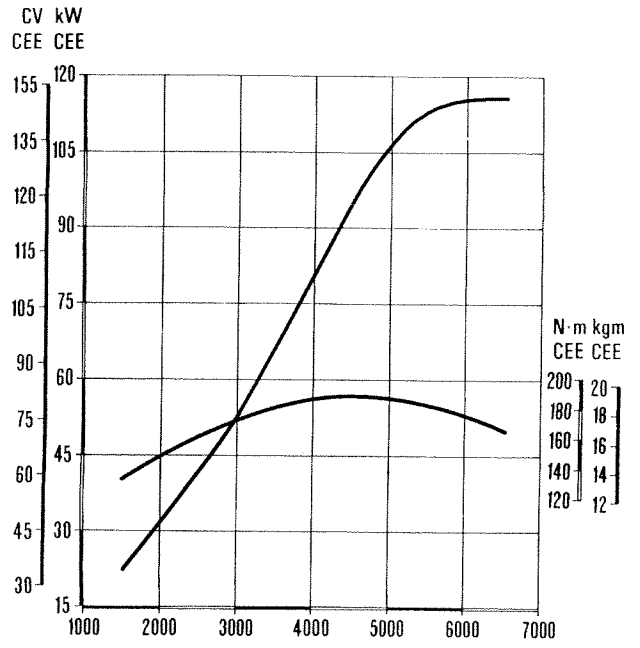

P3U23LA01

1998 *20v turbo*

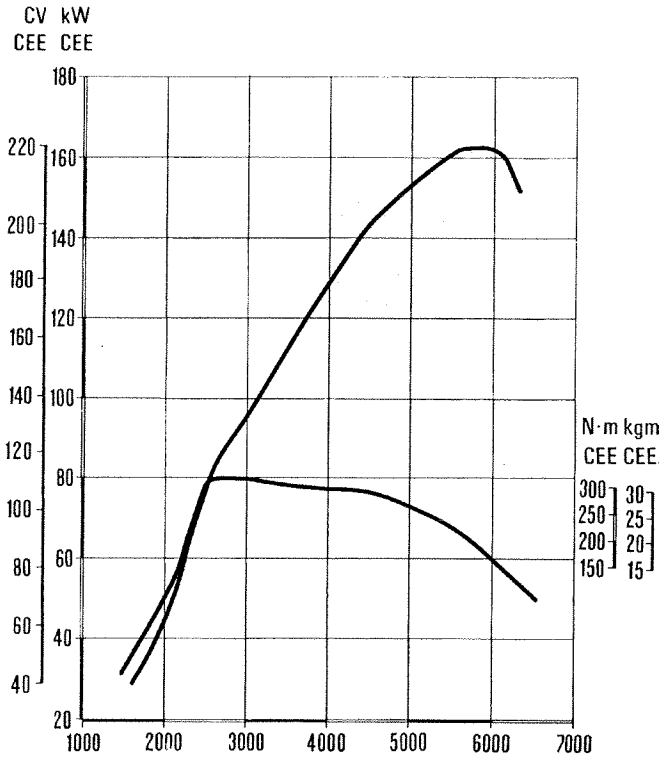

P3U23LA03

2446 *20v*

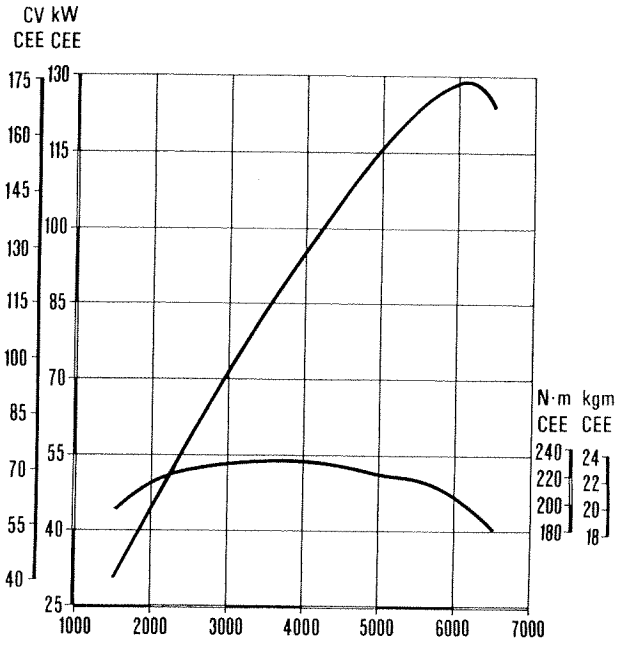

3U23LA02

Typical engine curves

The power and torque curves illustrated can be obtained with the engine overhauled and run in (50 hours of operation) without a fan, with a silencer and air filter fitted at sea level.

Copyright by Fiat Auto

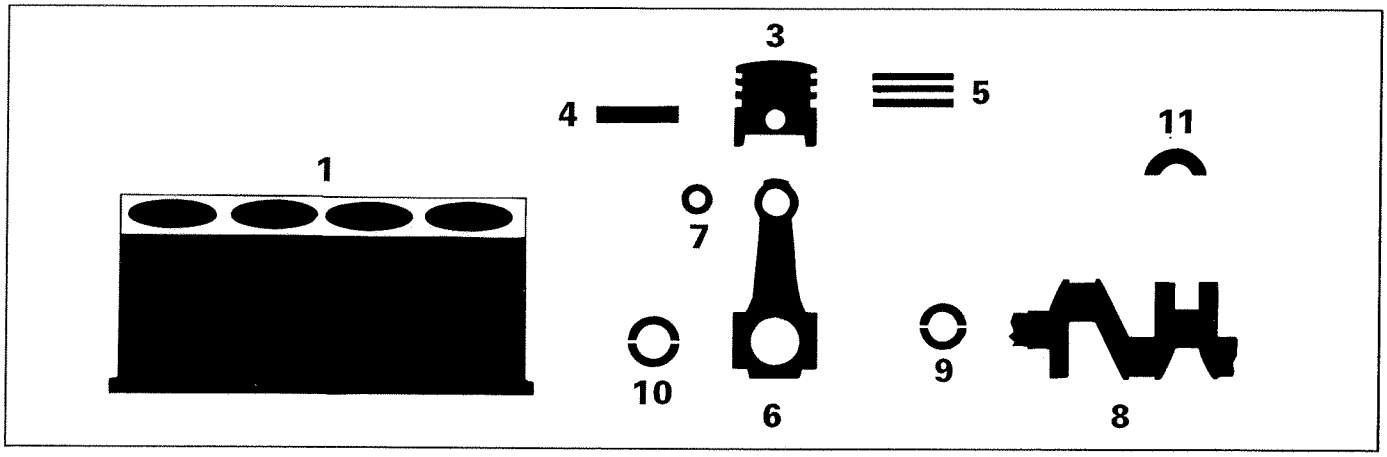

DESCRIPTION		1998 20v	2446 20v	1998 20v turbo
		Values in mm		
1 Main bearing supports	L_1	21,720÷21,800		
	1	63,705÷63,718		
	2			
	3			
Cylinder bore	A	82,000÷82,010	83,000÷83,010	82,000÷82,010
	B	82,010÷82,020	83,010÷83,020	82,010÷82,020
	C	82,020÷82,030	83,020÷83,030	82,020÷82,030
3 Piston	Y	12,5		
	A	81,952÷81,962	82,952÷82,962	81,952÷81,962
	B	81,959÷81,971	82,959÷82,971	81,959÷81,971
	C	81,968÷81,978	82,968÷82,978	81,968÷81,978
Ø LANCIA >		0,4		
3 Diff. in weight between pistons		± 5 g		
3-1 Piston Cylinder bore	A	0,038÷0,058		
	B	0,039÷0,061		
	C	0,042÷0,062		

DESCRIPTION		1998 20v	2446 20v	1998 20v turbo
		Values in mm		
3 Gudgeon pin housing	1	20,002÷20,007		
	2			
3 Piston ring grooves	1	1,520÷1,540	1,220÷1,240	1,220÷1,240
	2	1,510÷1,530		
	3	3,010÷3,030		
4 Gudgeon pin	1	19,996÷20,000		21,996÷22,000
	2			
	⌀ LANCIA >	0,2		
4-3 Gudgeon pin - Housing		0,002 ÷ 0,011		
5 Piston rings	1	1,475÷1,490	1,170÷1,190	1,170÷1,190
	2	1,475÷2,490		1,470÷1,490
	3	2,975÷2,990		
	⌀ LANCIA >	0,4		
5-1 Opening at end of piston rings in cylinder liner	1	0,300÷0,500	0,250÷0,500	0,200÷0,350
	2	0,300÷0,500		0,250÷0,500
	3	0,250÷0,500		
5-3 Piston rings Piston ring grooves	1	0,030÷0,065	0,030÷0,070	0,030÷0,070
	2	0,020÷0,055		0,020÷0,060
	3	0,020÷0,055		

Copyright by Fiat Auto

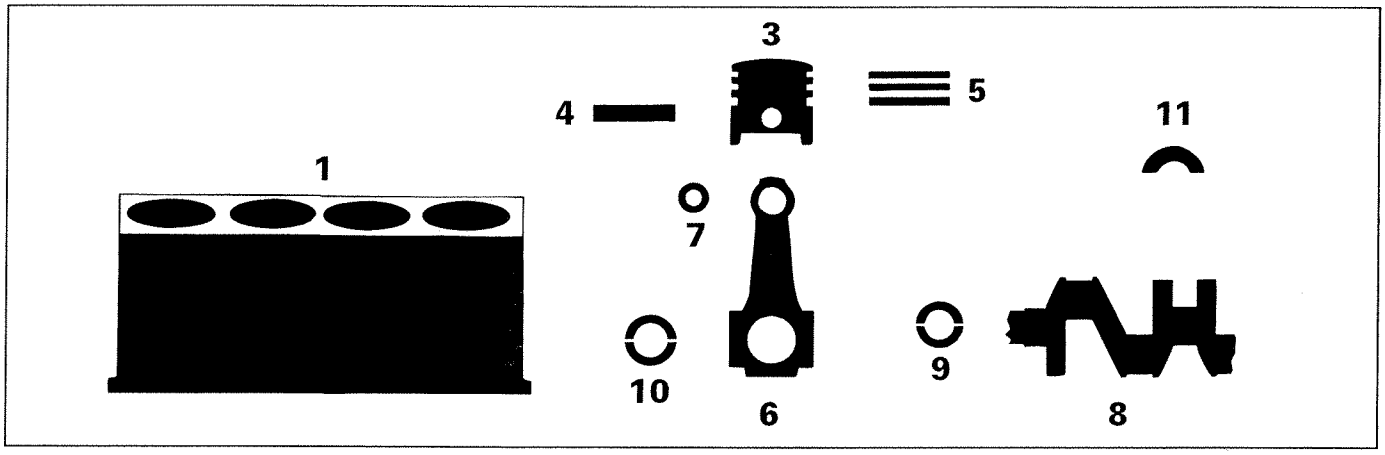

DESCRIPTION			1998 20v	2446 20v	1998 20v turbo
			Values in mm		
6	Small end bush or pin housing Ø1	Ø1	22,939÷22,972		
	Big end bearing housing Ø2	1	51,354÷51,366	53,897÷53,909	51,354÷51,366
		2			
		3			
7	Small end bush	Ø1	23,007÷23,027		25,003÷25,023
		Ø2 1	22,004÷22,007		22,006÷22,012
		Ø2 2			
4-7	Gudgeon pin / Small end bush		0,006÷0,016		
7-6	Small end bush / Bush housing		0,034÷0,073		0,031÷0,084
8	Main journals Ø1	A	59,994÷60,000		
		B	59,988÷59,994		
		C	59,982÷59,988		
	Crank pins Ø2	A	48,238÷48,244	50,799÷50,805	48,238÷48,244
		B	48,232÷48,238	50,793÷50,799	48,232÷48,238
		C	48,226÷48,232	50,787÷50,793	48,266÷48,232
	L1		26,575÷26,625		

DESCRIPTION		1998 20v	2446 20v	1998 20v turbo
		Values in mm		
9 Crankshaft bearings	L A	1,836÷1,840		1,836÷1,837
	L B	1,839÷1,843		1,836÷1,844
	L C	1,842÷1,846		1,843÷1,849
	⌀ LANCIA <	0,254 - 0,508		
9–8 Crankshaft bearing - Main journals		0,025÷0,052		0,031÷0,062
10 Big end bearings	L A	1,536÷1,540	1,527÷1,531	1,536÷1,540
	L B	1,539÷1,543	1,530÷1,534	1,539÷1,543
	L C	1,542÷1,546	1,533÷1,537	1,542÷1,546
	⌀ LANCIA <	0,254÷0,508		
10–8 Big end bearings - Main journals		0,030÷0,056		
11 Thrust washers	S	2,342÷2,358		
	S LANCIA >	0,127		
11–8 Crankshaft end float		0,059÷0,211		

Copyright by Fiat Auto

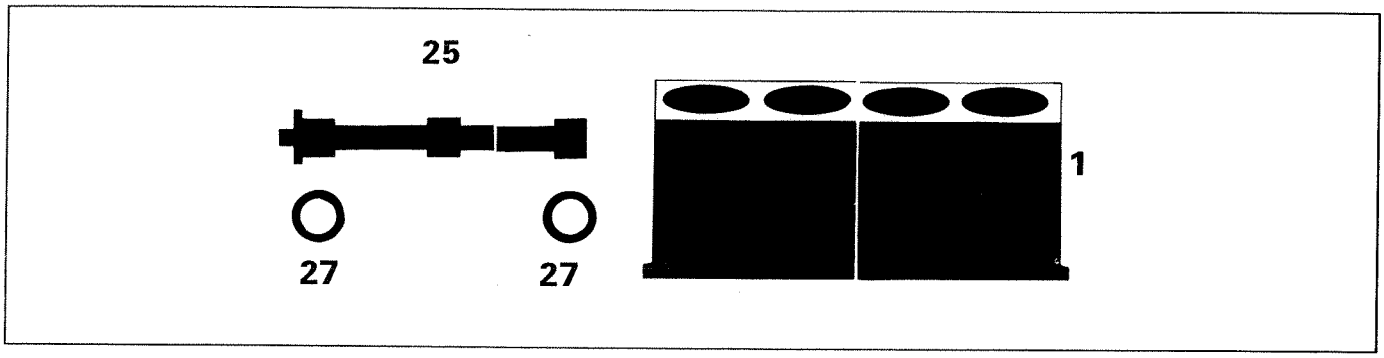

1998 20v	2446 20v	1998 20v turbo

DESCRIPTION		Values in mm	
15 Operation of counter balance shafts		by oil pump driven gear	through toothed belt
27 Ball bearings for counter balance shafts	$\varnothing_1$	19,900 ÷ 20,000	
	$\varnothing_2$	46,989 ÷ 47,000	
25 Counter balance shaft bearings	$\varnothing$	19,980 ÷ 19,993	
1 Bearing seats in cylinder block/crankcase	$\varnothing$	46,975 ÷ 47,000	
27-1 Ball bearings / Cylinder block seats		+0,011 ÷ – 0,025	
25-27 Shaft bearings / Ball bearings		+0,020 ÷ – 0,003	

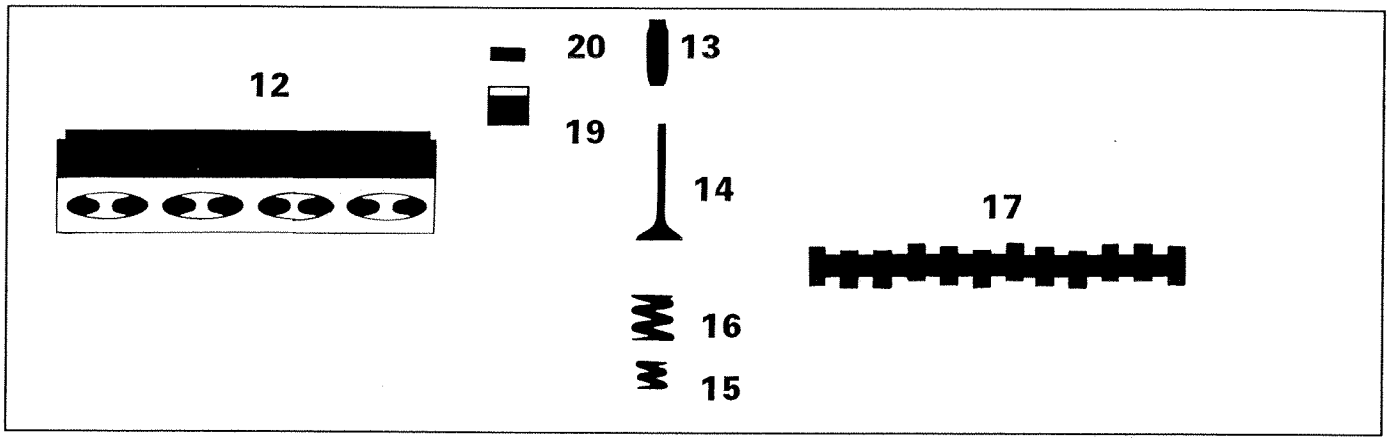

DESCRIPTION			1998 20v	2446 20v	1998 20v turbo
			Values in mm		
	Valve guide bore in cylinder head	∅	12,950÷12,977		
12 a	Valve seat	α intake	45° ± 5′		
		α exhaust	45° ± 5′		
		L	about 2		
	Volume of combustion chamber in cylinder head	cm^3	39	38,2	39
13	Valve guide	∅1	7,022÷7,040		
		∅2 intake	13,010÷13,030		
		∅2 exhaust	0,05 - 0,10 - 0,25		
13-12 a	Valve guide Bore in cylinder head	intake / exhaust	0,033÷0,080		
14	Valves	intake ∅1	6,975÷6,990		
		intake ∅2	29,900÷30,200	33,400÷33,700	29,900÷30,200
		intake α	45° 30′ ± 5′		
		exhaust ∅1	6,960÷6,975		
		exhaust ∅2	25,900÷26,200	27,900÷28,200	25,900÷26,200
		exhaust α	45°30′ ± 5′		

Copyright by Fiat Auto

DESCRIPTION		1998 20v	2446 20v	1998 20v turbo
		Values in mm		
14-13 Valve / Valve guide	Valve	0,032÷0,065		
	Valve guide	0,047÷0,080		
15 Internal valve spring	P_1	11,08÷12,07 daN		9,61÷10,6 daN
	H_1	29,5		
	P_2	21,58÷23,54 daN		20,11÷22,07 daN
	H_2	20		
16 External valve spring	P_1	27,07÷29,43 daN		
	H_1	34		
	P_2	48,46÷53,38 daN		48,46÷52,38 daN
	H_2	24,5		
17 Camshaft bearings	∅	26,000÷26,015		
	L_1 (●)	19,250÷26,015		19,250÷19,330
Cam lift	Valve	8	8,75	9,3
	Valve guide	8	8,75	9
12 Camshaft supports in cylinder head	∅	26,045÷26,070		
	L_1*	19,100÷19,150		
	∅	33,000÷33,025		
17-12 Camshaft bearings / Camshaft housing supports	radial	0,030÷0,070		
	axial	0,100÷0,230		

* Measurement of cap

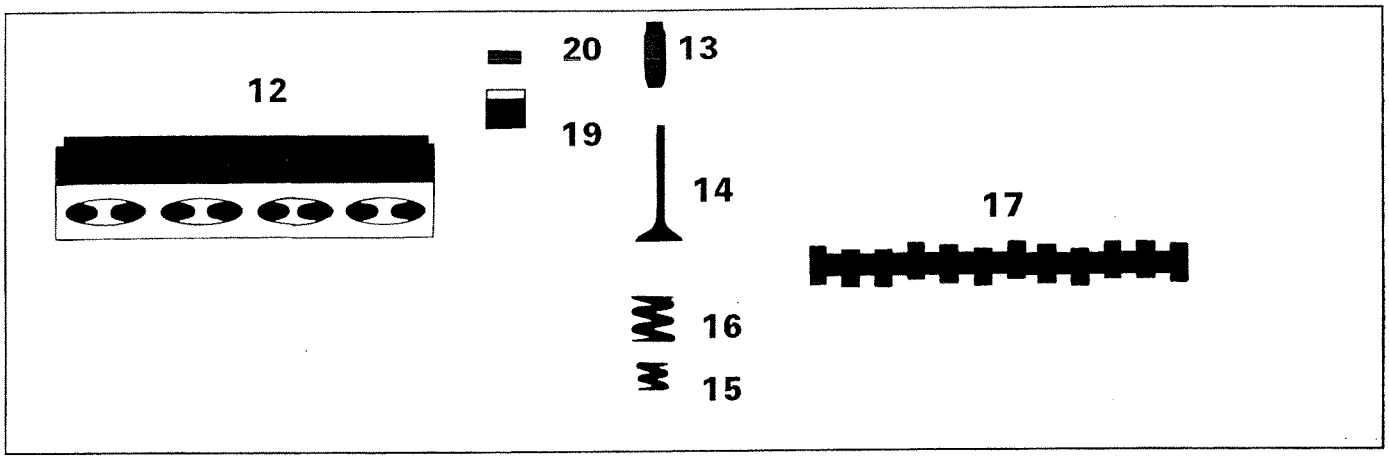

1998 20v	2446 20v	1998 20v turbo

DESCRIPTION		Values in mm
19	Tappet ∅	32,959÷32,975
19-12	Tappet Bore in cylinder head	0,025÷0,066
20	Shim S (0,05)	–
17-20	clearance for timing check	0,45
		0,45
		Hydraulic tappets
	operational clearance	Hydraulic tappets

Copyright by Fiat Auto

TIMING DIAGRAMS

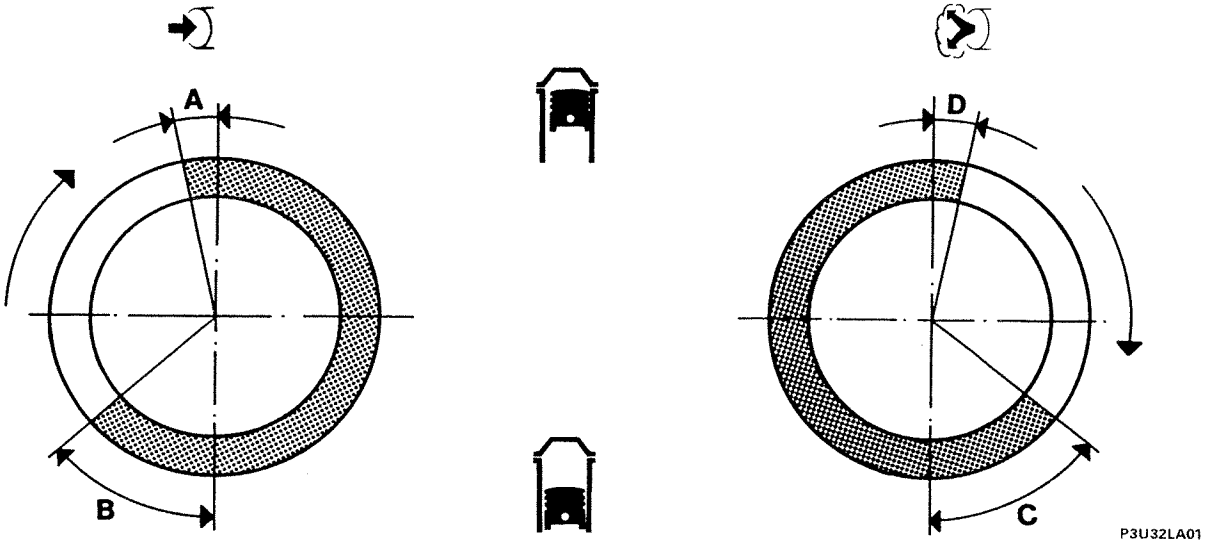

TIMING ANGLES

		1998 20v	2446 20v	1998 20v turbo
A — Inlet	opens BTDC	9° after TDC (*) 9° (**)	1° after TDC (*) 17° (**)	8° after TDC 10° (*)
B	closes ABDC	49° (*) 31° (**)	47° (*) 29° (**)	54° 36° (*)
C — Exhaust	opens BBDC	40°	44°	40°
D	closes ATDC	0°	2°	0°

(*) At high engine loads, high speeds (starting stage).

(**) At high engine loads, low-medium speeds and with the consequent operation of the phase transformer (torque stage).

	1998 20v	1998 20v turbo	2446 20v
LUBRICATION	Values in mm		
Engine lubrication system	forced circulation via geared pump with cartridge oil filter in series		
Oil pump	geared, located in the crankshaft front cover		
Pump operated	through chain controlled by crankshaft		
Oil pressure relief valve	incorporated in crankshaft front cover		
Full flow filter	cartridge		
Insufficient oil pressure sender unit	electrical		
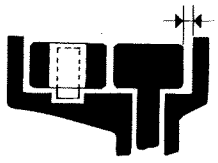 between the edge of the gears and the pump casing	0,110 ÷ 0,180		
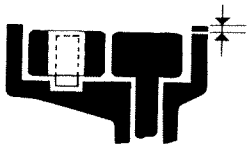 between the upper side of the gears and the pump cover	0,016 ÷ 0,086		
 between the drive gear and the driven gear	0,30		
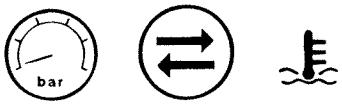 Operating pressure at a temperature of 100°C	when idling 1 bar at 4000 rpm 4 bar		
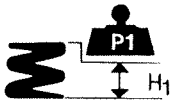 Oil pressure relief valve spring	P_1	11,73 ÷ 12,51	
	H_1	35	

Copyright by Fiat Auto

COOLING SYSTEM

			1998 20v	2446 20v	1998 20v turbo
Cooling circuit			coolant circulation via centrifugal pump, radiator and two speed electrical fan operated by thermostatic switch		
Water pump operation			through belt		
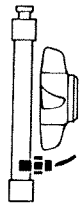 Thermal switch to engage fan	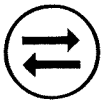	1st stage	90° ÷ 94°C		90° ÷ 94°C
		2nd stage			95° ÷ 99°C
		1st stage	85° ÷ 89°C		85° ÷ 89°C
		2nd stage			90° ÷ 94°C
Engine coolant thermostat		opening	81° ÷ 85°C		86° ÷ 90°C
		max opening	99° ÷ 103°C		101° ÷ 105°C
		valve travel	9,5 mm		
Fitting clearance between the impeller vanes and pump casing 			-		
Pressure for checking syst. water tightness			0,98 bar		
Pressure for checking exhaust valve on expansion tank cap			0,98 bar		

FUEL SYSTEM

	Bosch Motronic M2.10 integrated electronic injection/ignition	Bosch Motronic M2.10 integrated electronic injection/ignition	Bosch Motronic M2.10 integrated electronic injection/ignition
Type			
Pump	electrical		
Capacity	⩾ 120 l/h		about 140 l/h
Fuel pressure regulator setting	3 bar		

Checking idle concentration of pollutant emissions

	CO (%)	HC (p.p.m)	CO_2 (%)
Upstream of the catalytic converter	0,4 ÷ 1	⩽ 600	⩾ 12
Downstream of the catalytic converter	⩽ 0,35	⩽ 90	⩾ 13

BOSCH INTEGRATED INJECTION/IGNITION SYSTEM COMPONENTS FOR 1998 20v AND 2446 20v ENGINE TYPES

	1998 20v	2446 20v
Injection/ignition system electronic control unit	B.261.623.053	0.261.203.669
Butterfly casing	60 NCFL 5	
Fuel pressure regulator	0.280.160.515	
Injector	B.280.709.744	0.280.150.443
Idle adjustment actuator	B.582.001.263	0.280.140.553
Electric fuel pump	0.580.453.979	
Air flow meter	0.280.217.111	
Fuel filter	A.450.044.239	
Butterfly valve position sensor (potentiometer)	0.280.122.001	
Coolant temperature sensor	0.280.130.026	
Lambda sensor	0.258.003.772	
Fuel vapour solenoid valve	0.280.142.300	
Detonation sensor	0.261.231.007 0.261.231.095	
Injection timing sensor	B.232.070.023	0.232.101.026
Intake air temperature sender unit	0.280.130.073	
TDC and rpm sensor	0.261.210.119	

BOSCH INTEGRATED INJECTION/IGNITION SYSTEM COMPONENTS FOR 1998 20v TURBO ENGINE TYPE

	1998 20v turbo
Injection/ignition system electronic control unit	0.261.204.483
Butterfly casing	60 NCFL 5
Fuel pressure regulator	0.280.160.515
Injector	0.280.150.450
Idle adjustment actuator	0.280.140.553
Electric fuel pump	0.580.453.427
Air flow meter	0.280.217.514
Fuel filter	0.450.905.231
Butterfly valve position sensor (potentiometer)	0.280.122.001
Coolant temperature sensor	0.280.130.055
Lambda sensor	0.258.003.770
Fuel vapour solenoid valve	0.280.142.301
Detonation sensor	0.261.231.095 0.261.231.007
Injection timing sensor	0.232.101.026
Intake air temperature sender unit	0.280.130.060
TDC and rpm sensor	0.261.210.119
Atmospheric pressure sensor	0.280.101.001
Supercharging pressure solenoid valve (Pierburg)	7.21493.00

SUPERCHARGING

Turbocharger operated by exhaust gases, cooled by engine coolant with waste gate valve and air/air heater exchanger

	1998 20v turbo
Turbocharger: type	Garrett TB28
Maximum supercharging pressure	1,20 bar

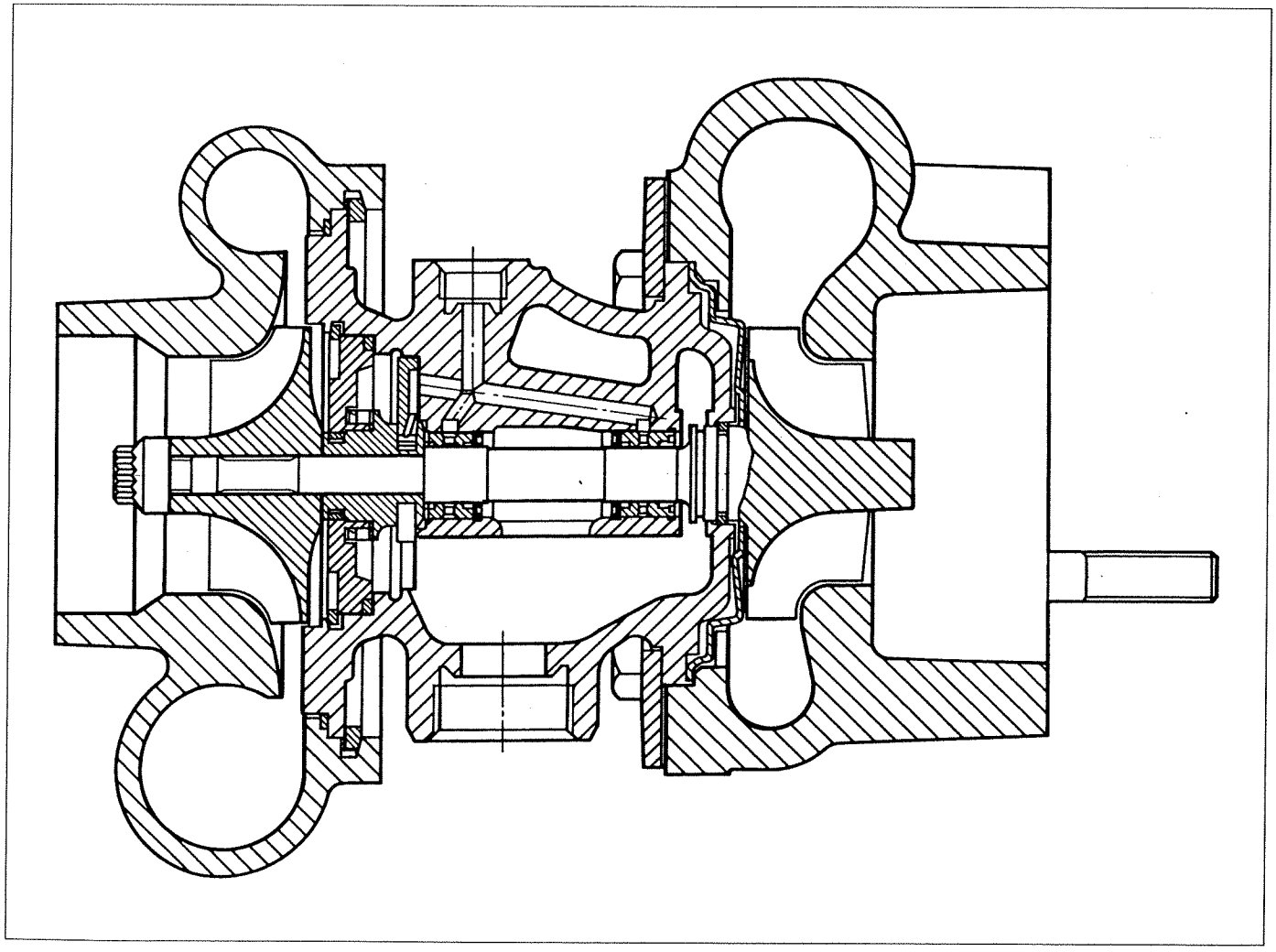

P3U37LA01

CROSS SECTION OF TURBOCHARGER

Copyright by Fiat Auto

CHARACTERISTICS

		2959 V6 24v
	Cycle	OTTO 4 stroke
	Timing	2 camshafts for each cylinder head
	Type of fuel system	Bosch Motronic M3.7 injection/ignition
	Number of cylinders	6 in 60° V
	Cylinder liner (bore) mm	93
	Stroke mm	72,6
	Capacity cc	2959
	Compression ratio	10
Max power	kW (CEE) (CV) (CEE)	150 (204)
	rpm	6300
Max torque	daNm (CEE) (kgm) (CEE)	27 (27,5)
	rpm	4500

2959 V6 24v

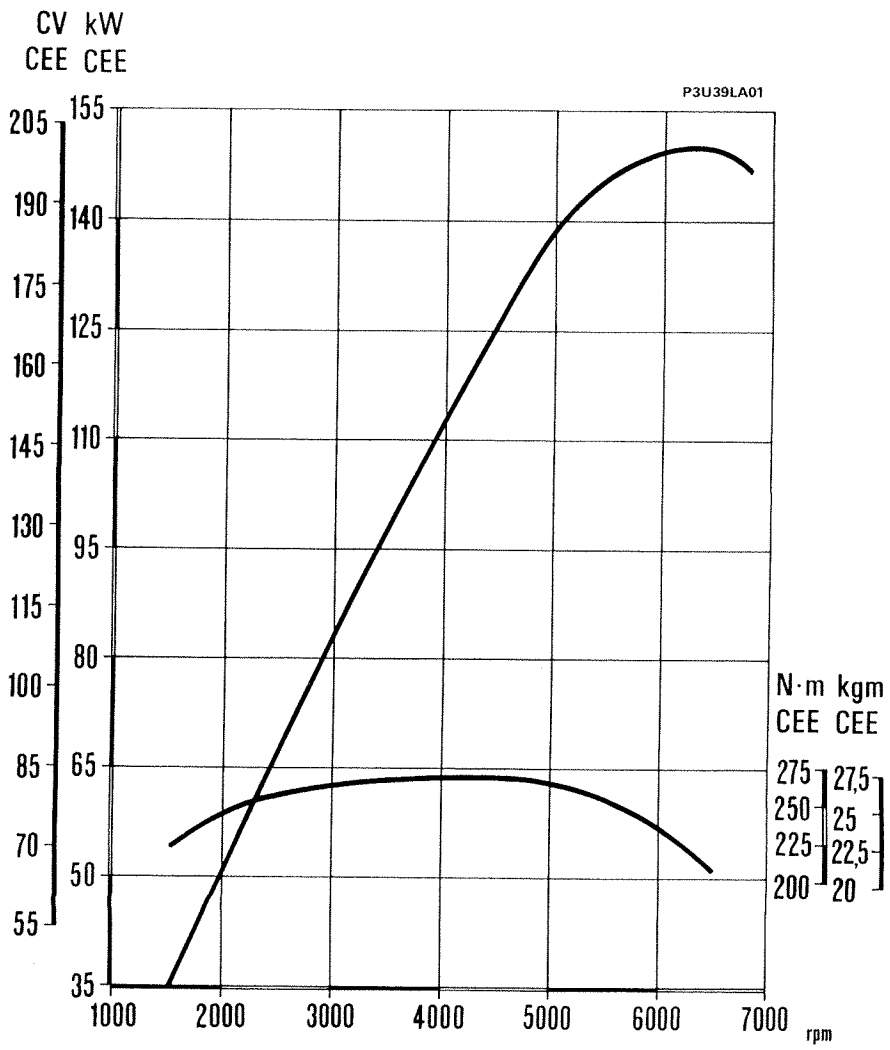

Typical engine curves

The power curve illustrated can be obtained with the engine overhauled and run in (50 hours of operation), without a fan, with a silencer and air filter fitted, at sea level.

Copyright by Fiat Auto

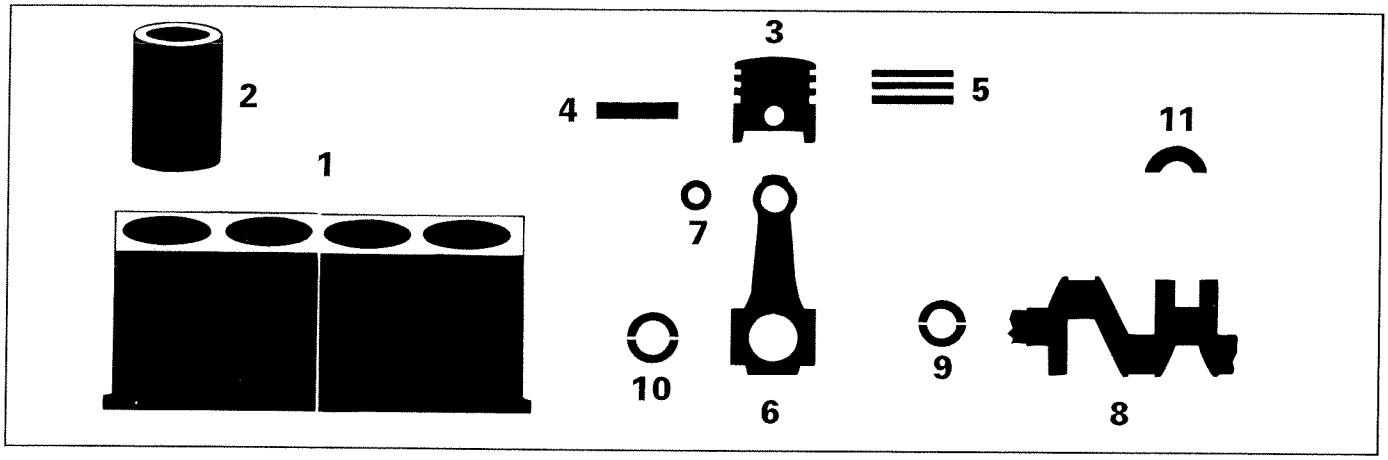

DESCRIPTION		Values in mm
1 Main bearing supports	L	26,450 ÷ 26,500
	A red	63,657 ÷ 63,663
	B blue	63,663 ÷ 63,669
	C green	63,669 ÷ 63,675
1 Cylinder housing	Ø	99,034 ÷ 99,058 liner
2 Cylinder liner	A blue	92,985 ÷ 92,994
	B pink	92,995 ÷ 93,004
	C green	93,005 ÷ 93,014
	Ø2	98,975 ÷ 99,000
2-1 Cylinder liner projection	Ø	0,01 ÷ 0,06

DESCRIPTION		Values in mm
3 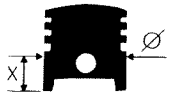 Piston	X	14
	⌀ A blue	92,925 ÷ 92,935
	⌀ B pink	92,935 ÷ 92,945
	⌀ C green	92,945 ÷ 92,955
	⌀ LANCIA >	–
3 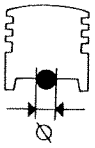 Gudgeon pin housing	Black	22,003 ÷ 22,006
	White	22,006 ÷ 22,009
3  Piston ring grooves 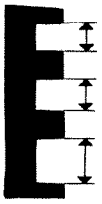	1	1,525 ÷ 1,545
	2	1,525 ÷ 1,545
	3	3,515 ÷ 3,535
3  Difference in weight between pistons		⩽ 4 g
3-2  Piston - Cylinder liner		0,050 ÷ 0,069
4 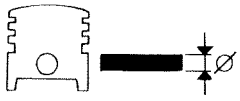 Gudgeon pin	Black	21,994 ÷ 21,997
	White	21,997 ÷ 22,000
	⌀ LANCIA >	–
4-3  Gudgeon pin - Housing		0,006 ÷ 0,012
5 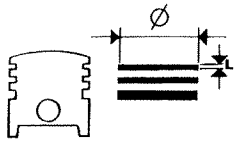 Piston rings	L 1	1,475 ÷ 1,490
	L 2	1,475 ÷ 1,490
	L 3	3,475 ÷ 3,490
	⌀ LANCIA >	–

Copyright by Fiat Auto

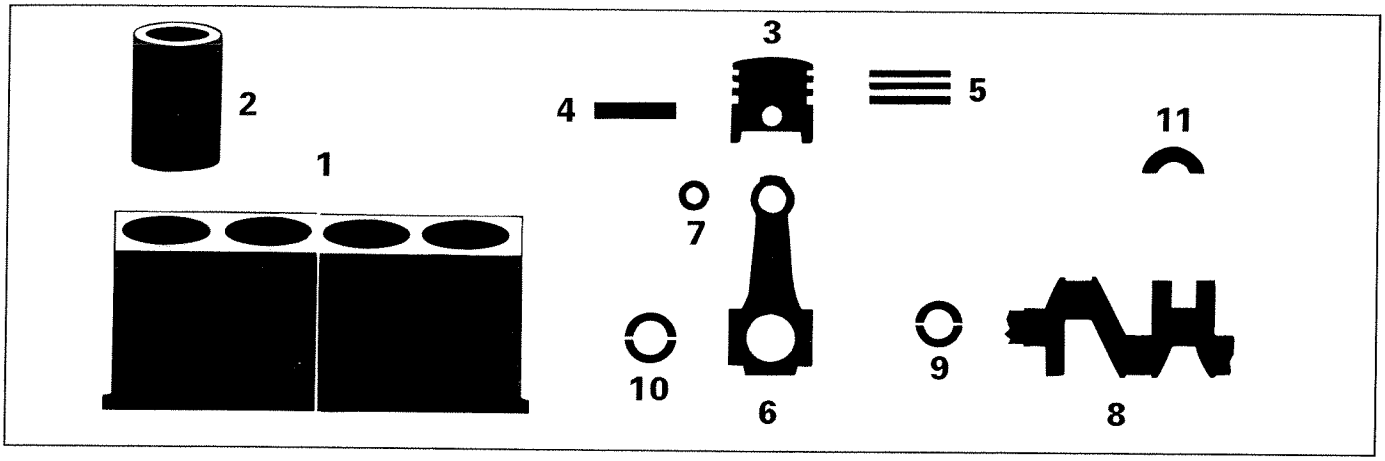

DESCRIPTION			Values in mm
5-2 Opening at end of piston rings in cylinder liner		1	0,40 ÷ 0,65
		2	0,40 ÷ 0,65
		3	0,30 ÷ 0,60
5-3 Piston rings Piston ring grooves	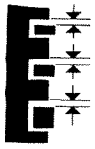	1	0,035 ÷ 0,067
		2	0,035 ÷ 0,070
		3	0,025 ÷ 0,060
6 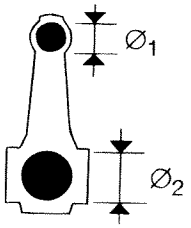 Small end bush or pin housing		$Ø_1$	25,120 ÷ 25,145
Big end bearing housing		$Ø_2$	55,511 ÷ 55,524
7 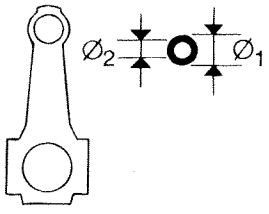 Small end bush		$Ø_1$	25,197 ÷ 25,222
		$Ø_2$	22,005 ÷ 22,015
4-7 Gudgeon pin Small end bush		Black	0,008 ÷ 0,021
		White	0,005 ÷ 0,018
7-6 Small end bush Bush housing			0,052 ÷ 0,102

DESCRIPTION		Values in mm
8 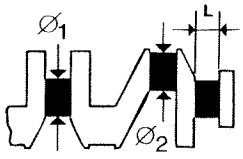 Main journals Ø1	A red	59,973 ÷ 59,979
	B blue	59,967 ÷ 59,973
	C green	59,961 ÷ 59,967
Crank pins Ø2	red	51,990 ÷ 52,000
	blue	51,980 ÷ 51,990
L		31,300 ÷ 31,335
9 Crankshaft bearings 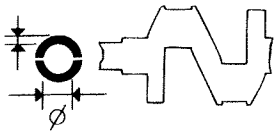 L	A red	1,833 ÷ 1,839
	B blue	1,839 ÷ 1,845
	C green	1,845 ÷ 1,851
Ø LANCIA <		–
9-8 Crankshaft bearings – Main journals		0,000 ÷ 0,024
10 Big end bearings 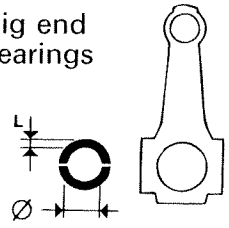 L	red	1,737 ÷ 1,745
	blue	1,741 ÷ 1,749
Ø LANCIA <		–
10-8 Big end bearings - Main journals	red	0,021 ÷ 0,060
	blue	0,023 ÷ 0,062
11 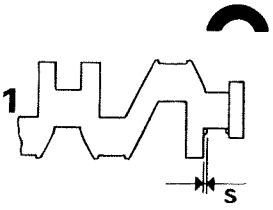 Thrust washers	S	2,310 ÷ 2,360
S LANCIA >		–
11-8 Crankshaft end float		0,080 ÷ 0,265

Copyright by Fiat Auto

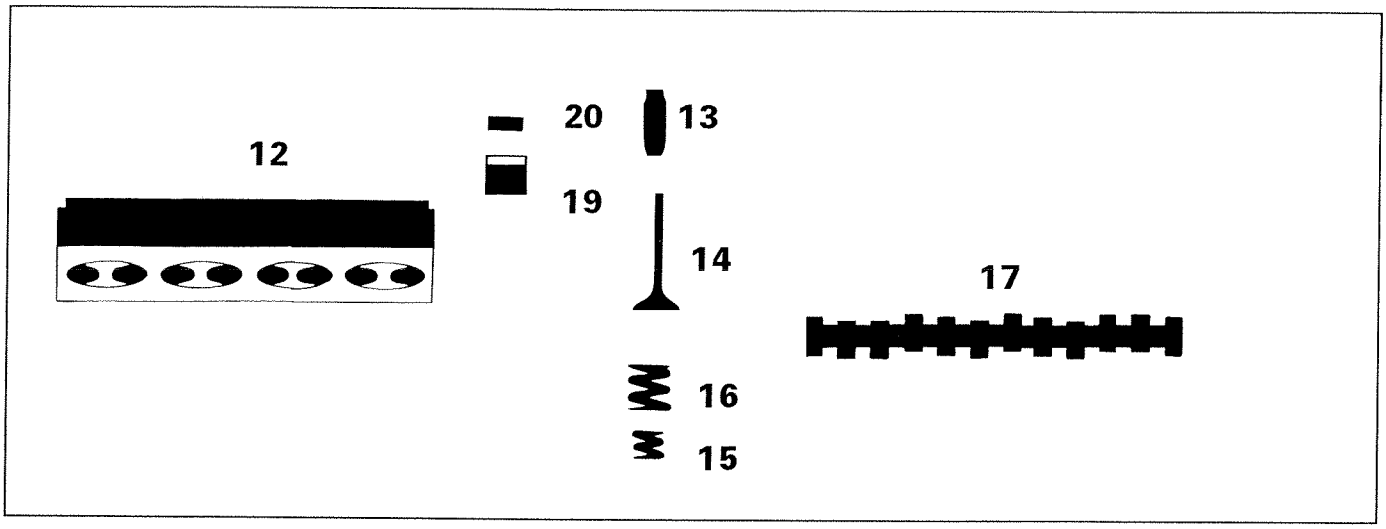

DESCRIPTION		Values in mm
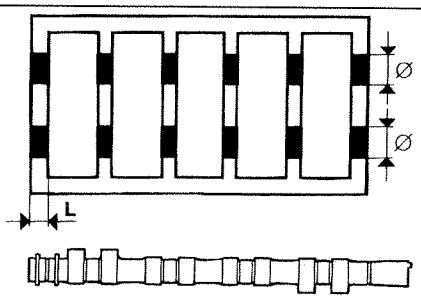 Camshaft supports	∅	27,010 ÷ 27,036
12	L	19,902 ÷ 19,935
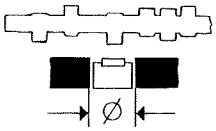 Tappet housing in cylinder head	∅	33,000 ÷ 33,025
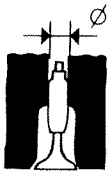 Valve guide bore in cylinder head	∅	12,000 ÷ 12,018
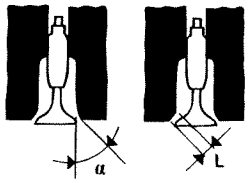 12 Valve seats	α	45° ± 10′
	α	45° ± 10′
	L	about 2
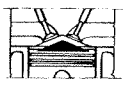 Volume of combustion chamber in cylinder head	cc	45,5

DESCRIPTION			Values in mm
13 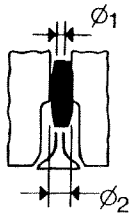	Valve guide	Ø1	7,000 ÷ 7,015
		Ø2	12,053 ÷ 12,064
		Ø2 LANCIA >	12,064 ÷ 12,082
			0,2
13-12	Valve guide Bore in ylinder head		0,035 ÷ 0,064
			0,046 ÷ 0,082
14 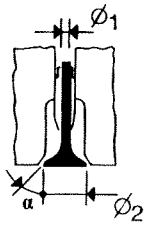	Valves	Ø1	6,965 ÷ 6,980
		Ø2	35,500 ÷ 35,700
		α	45°30' ± 5'
		Ø1	6,965 ÷ 6,980
		Ø2	31,000 ÷ 31,200
		α	45°30' ± 5'
14-13	Valve Valve guide		0,020 ÷ 0,050
15 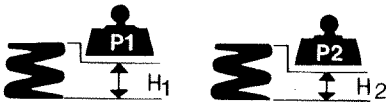	Internal valve spring	P1	12,36÷ 13,14 daN
		H1	30,5
		P2	24,02 ÷ 25,09 daN
		H2	21
16 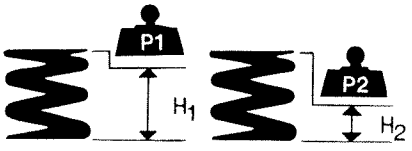	External valve spring	P1	21,91 ÷ 23,09 daN
		H1	32,5
		P2	43,07 ÷ 45,03 daN
		H2	23,5
17 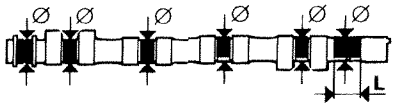	Camshaft bearings	Ø	26,949 ÷ 26,980
		L	20,000 ÷ 20,033
17 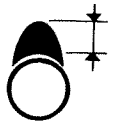	Cam lift		9,3
			9,3

Copyright by Fiat Auto

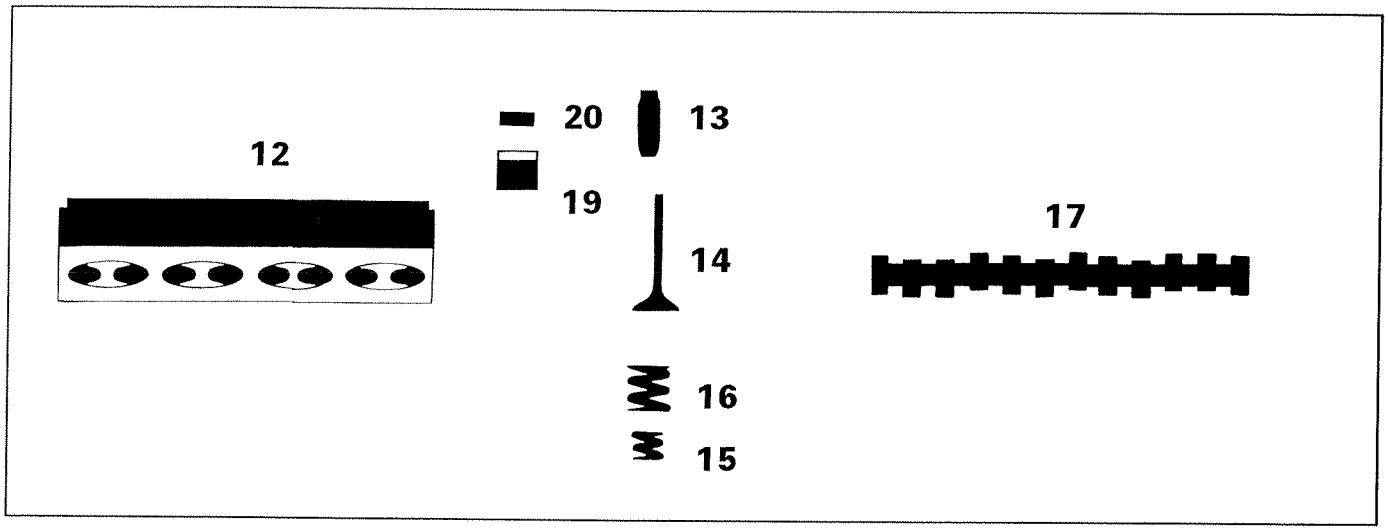

DESCRIPTION			Values in mm
17 - 12	Camshaft bearings - Housing	radial	0,030 ÷ 0,077
		axial	0,065 ÷ 0,131
19	Tappet	⌀	32,959 ÷ 32,975
19-12	Tappet - Housing in cylinder head		0,025 ÷ 0,066
17-20	clearance for timing check		0,25
			0,25
	operational clearance		Hydraulic tappets

TIMING DIAGRAMS

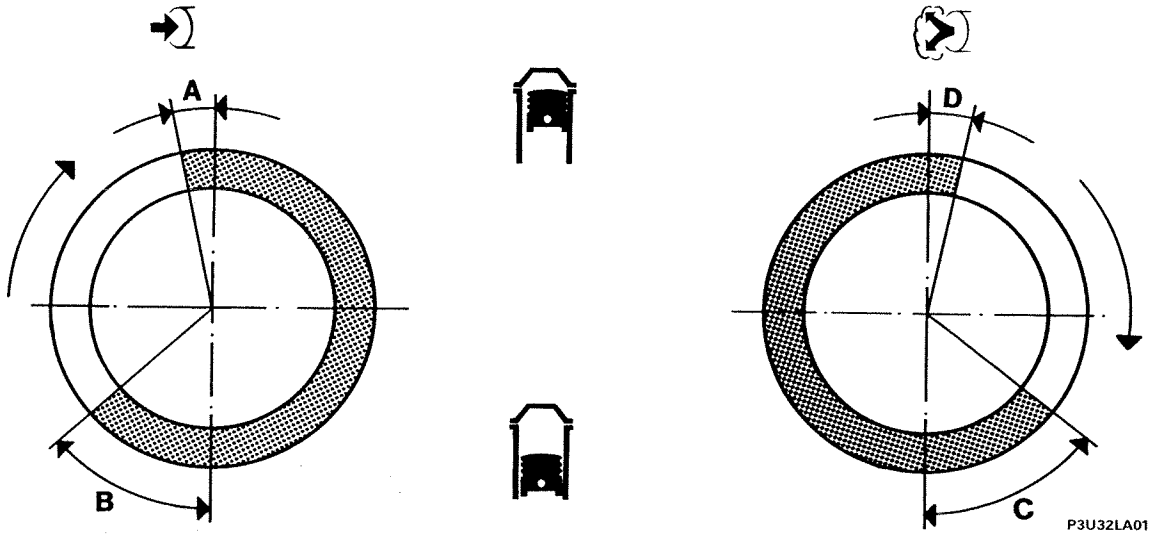

TIMING ANGLES

A	Inlet	opens before TDC	5°
B		closes after BDC	43°
C	Exhaust	opens before BDC	46°
D		closes after TDC	10°

Copyright by Fiat Auto

LUBRICATION		Values in mm
Engine lubrication system		forced circulation, via lobe geared pump with cartridge oil filter in series
Oil pump		lobe gears
Pump operated		–
Oil pressure relief valve		incorporated in oil pump
Full flow filter		cartridge
Insufficient oil pressure sender unit		electrical
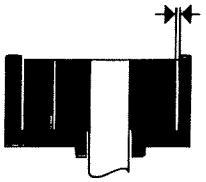 between the edge of the gear and the pump casing		0,170 ÷ 0,275
 between the upper edge of the gear and the cover		0,025 ÷ 0,075
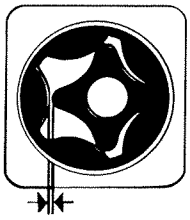 between the drive gear and the driven gear		0,040 ÷ 0,290
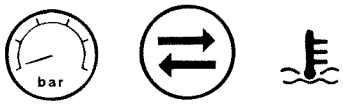	idle speed	> 0,8 bar
Operating pressure at a temperature of 100°C	at 4000 rpm	> 4,5 bar
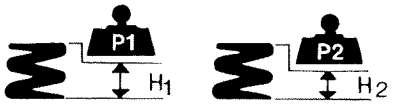 Oil pressure relief valve spring	P_1	20,13 ÷ 21,13
	H_1	28
	P_2	13,81 ÷ 14,81
	H_2	36

COOLING SYSTEM

Cooling circuit		coolant circulation via centrifugal pump, radiator and two speed electrical fan operated by thermostatic switch
Water pump operation		through belt
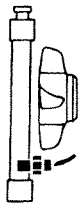 Thermal switch to engage fan	1st stage	86° ÷ 90°C
	2nd stage	90° ÷ 94°C
	1st stage	81° ÷ 85°C
	2nd stage	85° ÷ 89°C
Engine coolant thermostat	opening	85° ÷ 89°C
	max opening	95°C
	valve travel	⩾ 7,5 mm
Fitting clearance between impeller vanes and pump casing 		0,5 ÷ 0,8 mm
Pressure for checking rad. water tightness		0,98 bar
Pressure for checking calibration of exhaust valve on expansion tank		0,98 bar

FUEL SYSTEM

Type	Bosch Motronic M 3.7 integrated electronic injection/ignition
Pump	electrical
Capacity	⩾ 120 l/h
Fuel pressure regulator setting	3 bar

Checking idle concentration of pollutant emissions	CO (%)	HC (p.p.m.)	CO_2 (%)
Upstream of the catalytic converter	0,4 ÷ 1	⩽ 600	⩾ 12
Downstream of the catalytic converter	⩽ 0,35	⩽ 90	⩾ 13

Copyright by Fiat Auto

00.10

BOSCH MOTRONIC M3.7 INTEGRATED INJECTION/IGNITION SYSTEM COMPONENTS	2959 V6 24v
Injection/ignition system electronic control unit	B.261.203.482
Butterfly casing	–
Fuel pressure regulator	0.280.160.758
Injector	0.280.150.701
Idle adjustment actuator	0.280.140.505
Electric fuel pump	0.580.453.980
Air flow meter	0.280.217.514
Fuel filter	0.450.905.231
Butterfly valve position sensor (potentiometer)	0.280.122.001
Coolant temperature sensor	0.280.130.026
Electric fuel pump relay feed	0.332.014.140
Injection/ignition control unit relay feed	0.332.014.140
Air temperature sender unit	0.280.130.073
Lambda sensor	B.258.003.390
TDC and rpm sensor	0.261.210.104
Impulse damper	0.280.161.217
Fuel vapour solenoid valve	0.280.142.300
Injection timing sensor	0.232.103.009
Detonation sensor	0.261.231.095 0.261.231.007
EGR valve (Pierburg)	7.22083.01
Pressure modulating valve for EGR (Pierburg)	7.21483.00

CROSS SECTION OF ENGINE 2387 JTD

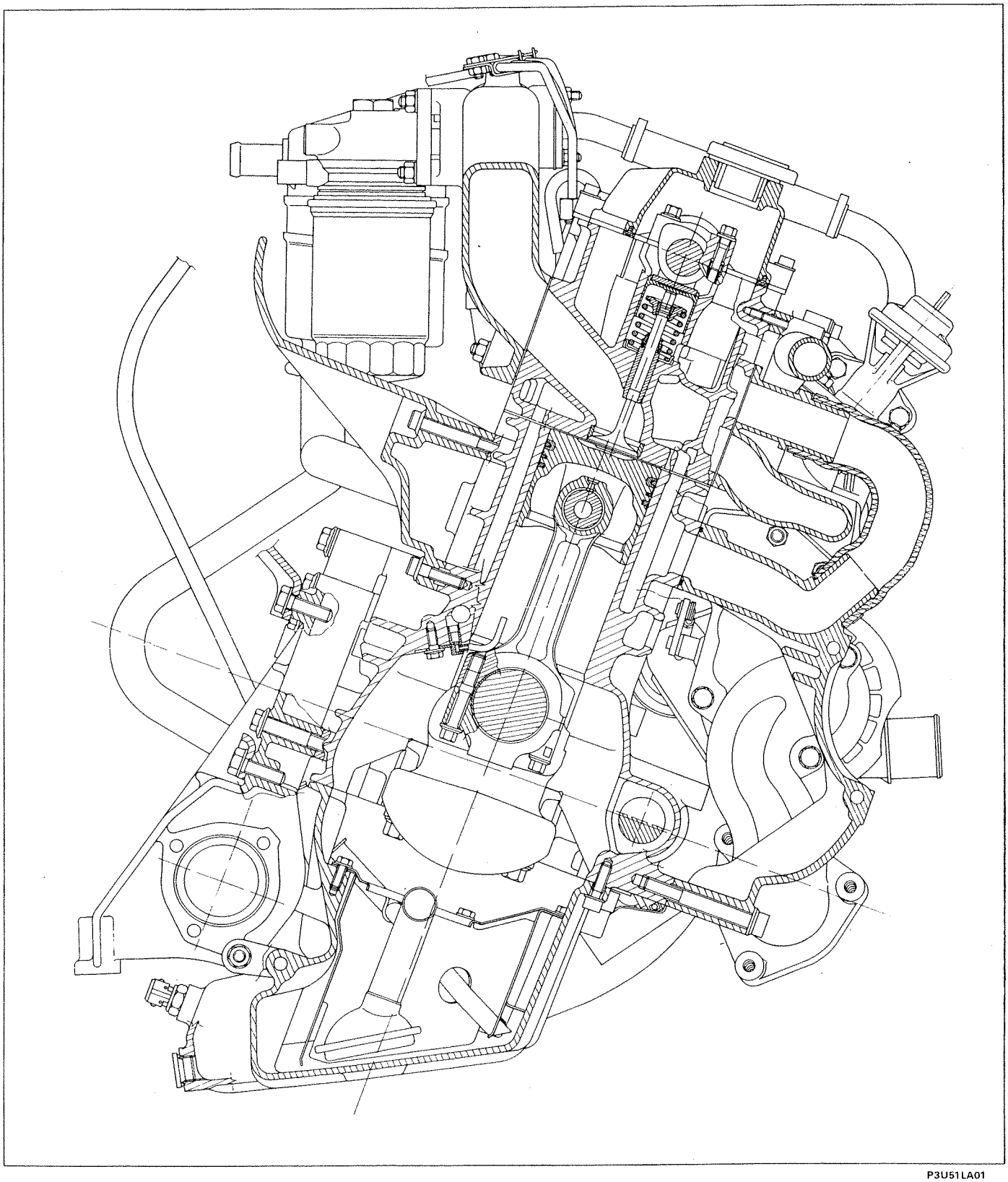

P3U51LA01

Copyright by Fiat Auto

CHARACTERISTICS

		2387 JTD
	Cycle	Diesel 4 stroke
	Timing	single overhead camshaft
	Engine balancing	through 1 counter-balance shaft
	Type of fuel system	Electronically controlled indirect injection
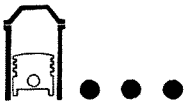	Number of cylinders	5 in line
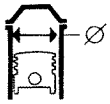	Cylinder liner (bore) mm	82
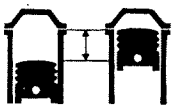	Stroke mm	90,4
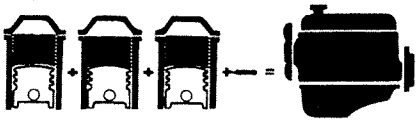	Capacity cc	2387
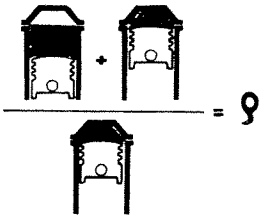	Compression ratio	18,45 ÷ 1
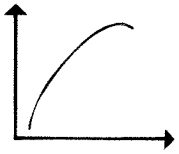	Max power kW (CEE) (CV) (CEE)	100 (136)
	rpm	4000
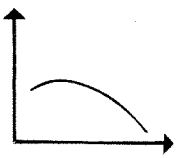	Max torque daNm (CEE) (kgm) (CEE)	30,4 (31)
	rpm	2000

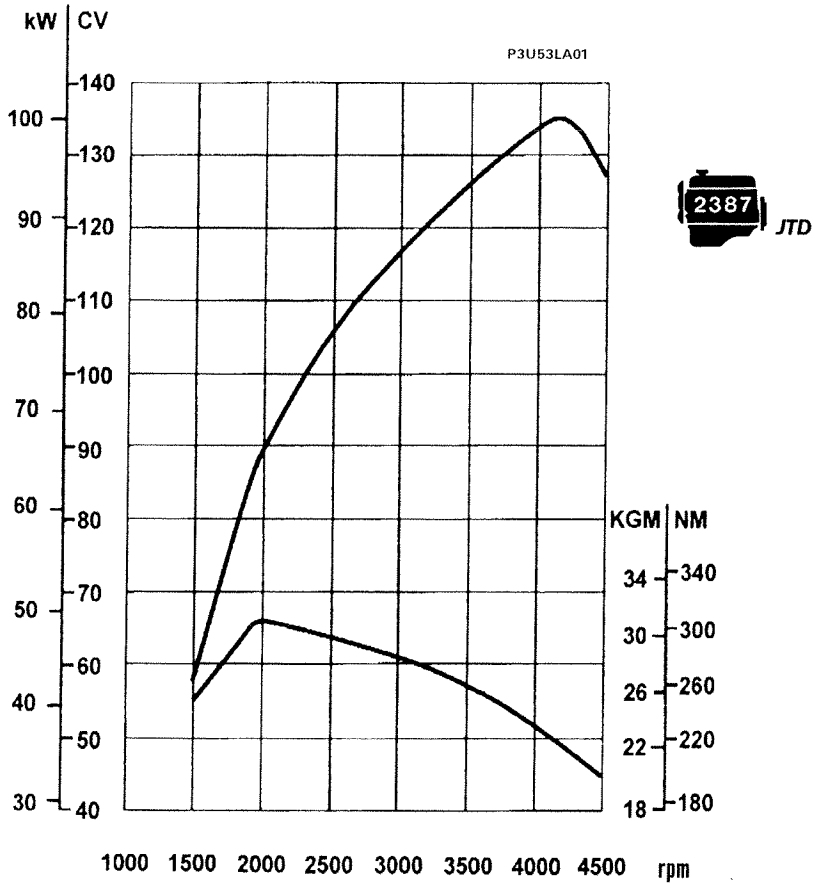

Typical engine curves

The power curve illustrated can be obtained with the engine overhauled and run in (50 hours of operation), without a fan, with a silencer and air filter fitted, at sea level.

Copyright by Fiat Auto

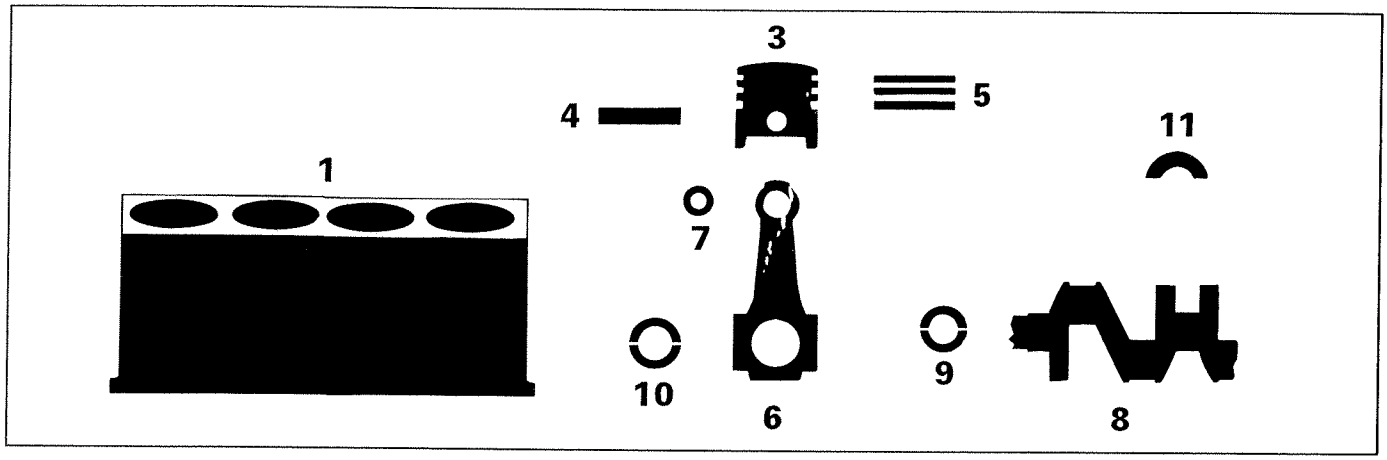

DESCRIPTION			2387 JTD
			Values in mm
1 Main bearing supports	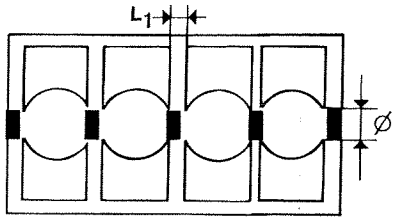	L	21,720 ÷ 21,800
		⌀	63,691 ÷ 63,732
Cylinder liner	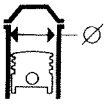 	A	82,000 ÷ 82,010
		B	82,010 ÷ 82,020
		C	82,020 ÷ 82,030
3 Piston	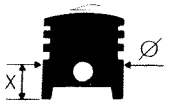	X	10
		A	81,930 ÷ 81,940
		B	81,940 ÷ 81,950
		C	81,950 ÷ 81,960
	⌀ LANCIA >		0,4
3-1	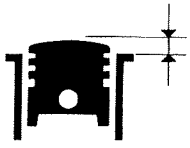 Piston projection		0,637 ÷ 1,162
3	 Diff. in weight between pistons		± 5 g
3-1	 Piston Cylinder liner		0,060 ÷ 0,080

DESCRIPTION			2387 JTD
			Values in mm
3	Gudgeon pin housing	∅	25,991 ÷ 25,996
3	Piston ring grooves	1	2,675 ÷ 2,705 (*)
		2	2,010 ÷ 2,030
		3	3,020 ÷ 3,040
4		∅	25,982 ÷ 25,988
	Gudgeon pin	∅ LANCIA	0,2
4-3	Gudgeon pin - Housing		0,003 ÷ 0,014
5		L 1	2,575 ÷ 2,595 (**)
		L 2	1,970 ÷ 1,990
		L 3	2,975 ÷ 2,990
	Piston rings	∅ LANCIA	0,4
5-3	Piston rings Piston ring grooves	1	–
		2	0,020 ÷ 0,060
		3	0,030 ÷ 0,065
5-1	Opening at end of piston rings in cylinder liner	1	0,250÷ 0,400
		2	0,250 ÷ 0,500
		3	0,250 ÷ 0,500

(*) Measured at the 79 mm diameter

(**) Measured 1.5 mm from the outside edge

Copyright by Fiat Auto

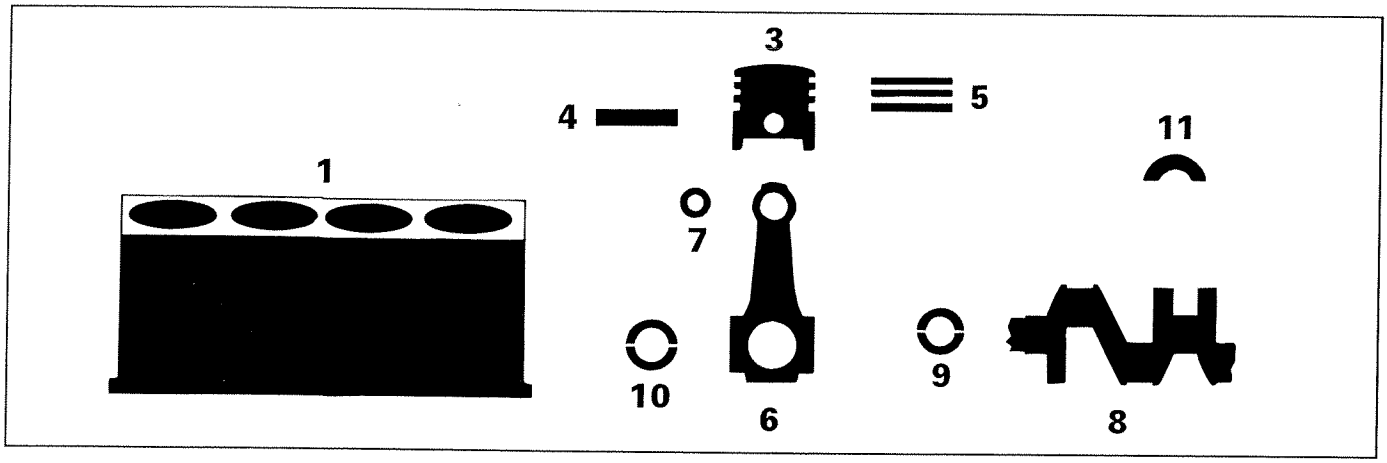

2387 JTD

DESCRIPTION			Values in mm
6	Small end bush or pin housing	$\varnothing_1$	28,939 ÷ 28,972
	Big end bearing housing	$\varnothing_2$	53,883 ÷ 53,923
6	Difference in weight between con rods		± 2,5 g
7		$\varnothing_1$	29,018 ÷ 29,038
	Small end bush	$\varnothing_2$	26,006 ÷ 26,012
4-7	Gudgeon pin Small end bush		0,018 ÷ 0,030
7-6	Small end bush Bush housing		0,046 ÷ 0,099
8	Main journals	$\varnothing_1$ A	59,994 ÷ 60,000
		$\varnothing_1$ B	59,988 ÷ 59,994
		$\varnothing_1$ C	59,982 ÷ 59,988
	Crank pins	$\varnothing_2$ A	50,799 ÷ 50,805
		$\varnothing_2$ B	50,793 ÷ 50,799
		$\varnothing_2$ C	50,787 ÷ 50,793
		L	26,575 ÷ 26,625

			2387 JTD
DESCRIPTION			Values in mm
9	Crankshaft bearings	A	1,836 ÷ 1,840
		B	1,839 ÷ 1,843
		C	1,842 ÷ 1,846
	⌀ LANCIA <		0,254 - 0,508
9–8	Crankshaft bearing - Main journals		0,025 ÷ 0,052
10	Bid end bearings	A	1,527 ÷ 1,531
		B	1,530 ÷ 1,534
		C	1,533 - 1,537
	⌀ LANCIA <		0,254 - 0,508
10–8	Big end bearings - Main journals		0,016 ÷ 0,070
11	Thrust washers	S	2,342 ÷ 2,358
	S LANCIA >		0,127
11–8	Crankshaft end float		0,059 ÷ 0,221

Copyright by Fiat Auto

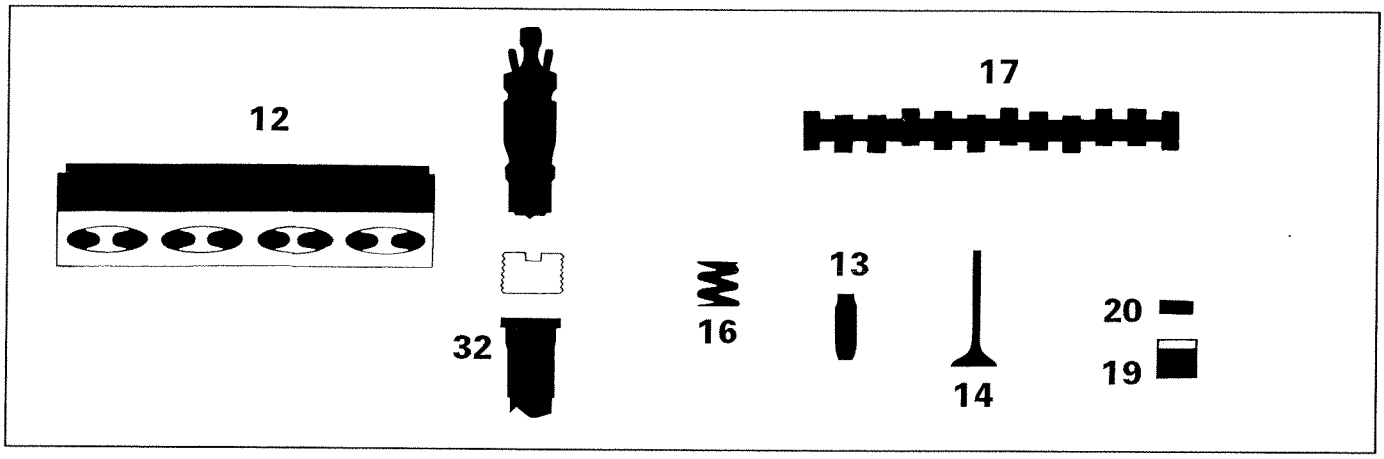

2387 JTD

DESCRIPTION		Values in mm
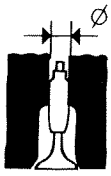 Valve guide bore in cylinder head	Ø	13,950 ÷ 13,977
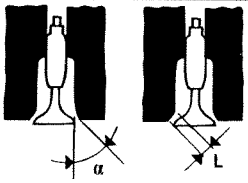	α	45° ± 5'
	α	45° ± 5'
Valve seats	L	about 2,7
Camshaft supports		
12 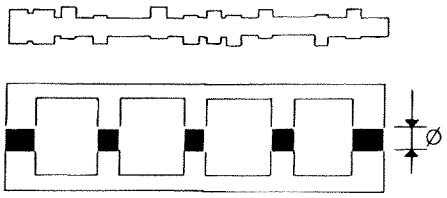	Ø	26,045 ÷ 26,070
(*)	(*)	19,100 ÷ 19,150
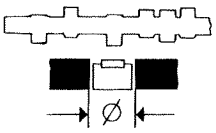 Tappet housing	Ø	37,000 ÷ 37,025
13 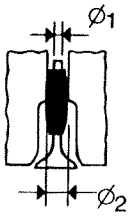 Valve guide	$Ø_1$	8,022 ÷ 8,040
	$Ø_2$	14,010 ÷ 14,030
	$Ø_2$ LANCIA >	0,05 - 0,10 - 0,25

(*) Front cap measurement

DESCRIPTION			2387 JTD
			Values in mm
13-12	Valve guide Bore in cylinder head		0,033 ÷ 0,080
14 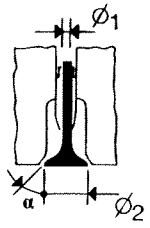	Valve	$\varnothing_1$	7,974 ÷ 7,992
		$\varnothing_2$	37,40 ÷ 37,70
		α	45°30' ± 5'
		$\varnothing_1$	7,974 ÷ 7,992
		$\varnothing_2$	30,90 ÷ 31,20
		α	45°30' ± 5'
14-13	Valve - Valve guide		0,030 ÷ 0,066
16 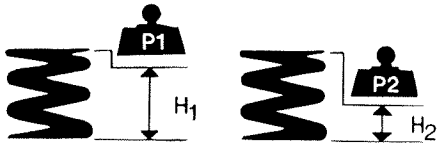	Valve spring	P_1	36,7 ÷ 39,6 daN
		H_1	36
		P_2	56 ÷ 61 daN
		H_2	26,5
17 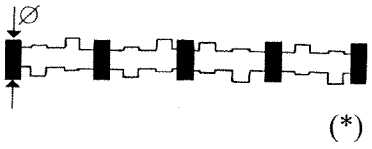	Camshaft bearings	$\varnothing$	26,000 ÷ 26,015
		(*)	19,250 ÷ 19,330
17-12		radial	0,030 ÷ 0,070
		axial	0,100 ÷ 0,230
17 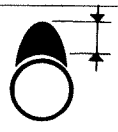	Cam lift		8,5
			8,5
19 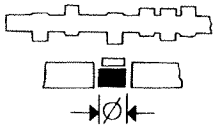	Tappet	$\varnothing$	36,975 ÷ 36,995
19-12	Tappet - Cylinder head		0,005 ÷ 0,050

Copyright by Fiat Auto

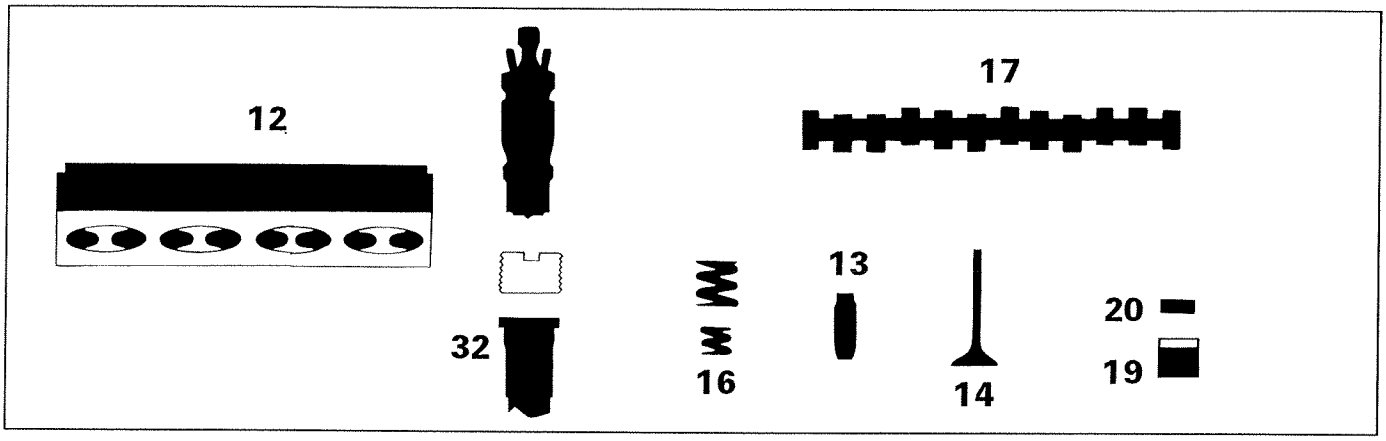

2387 JTD

DESCRIPTION		Values in mm
20 (s) Shim	S (0,05)	3,25 ÷ 4,70
17-20 clearance for timing check		0,50
		0,50
operational clearance		0,30 ± 0,05
		0,35 ± 0,05
Timing angles — Inlet	opens before TDC	6°
	closes after BDC	26°
Exhaust	opens before BDC	26°
	closes after TDC	6°

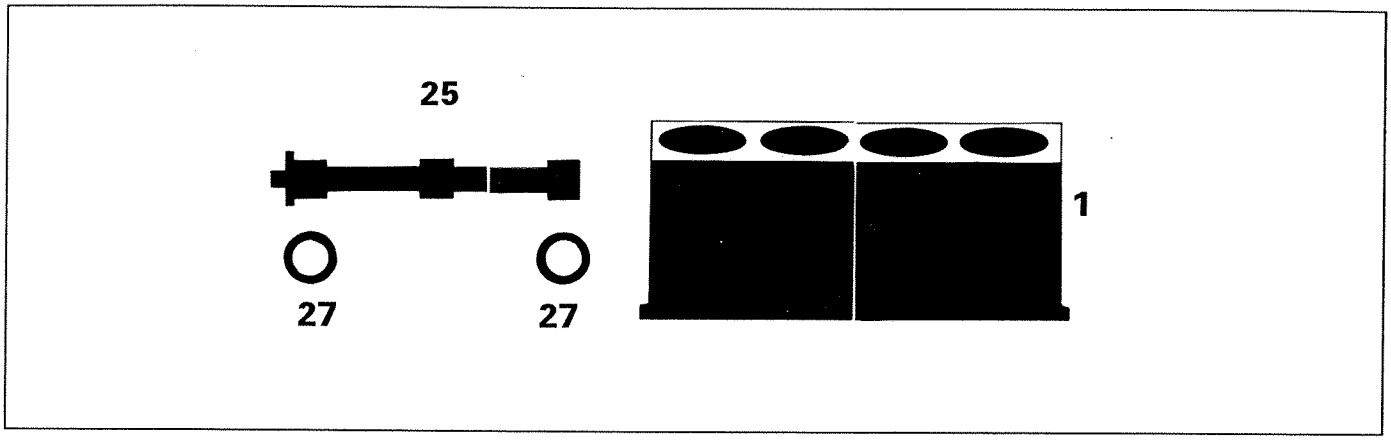

2387 JTD

DESCRIPTION		Values in mm
25 Counter balance shafts		n° 1
Shaft operation		through oil pump driven gear
27 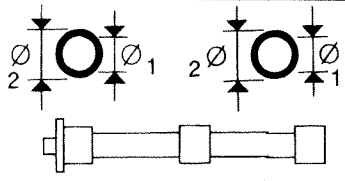 Ball bearings for counter balance shafts	$\varnothing_1$	19,900 ÷ 20,000
	$\varnothing_2$	46,989 ÷ 47,000
25 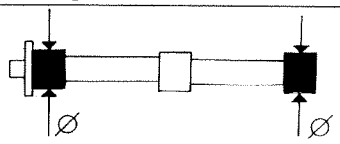 Counter balance shaft bearings	$\varnothing$	19,980 ÷ 19,993
1 Bearing seats in cylinder block-/crankcase	$\varnothing$	46,975 ÷ 47,000
27-1 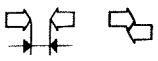 Ball bearings Cylinder block seats		+0,011 ÷ – 0,025
25-27 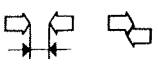 Shaft bearings Ball bearings		+0,020 ÷ – 0,003

Copyright by Fiat Auto

LUBRICATION	2387 JTD
	Values in mm
Engine lubrication system	forced circulation, via lobe gear pump with cartridge filter in series
Oil pump	gears, located in the crankshaft front cover
Pump operated	through chain controlled by the crankshaft
Oil pressure relief valve	incorporated in the crankshaft front cover
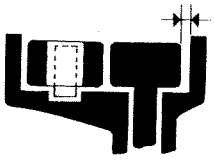 between the edge of the gears & the pump casing	0,110 ÷ 0,180
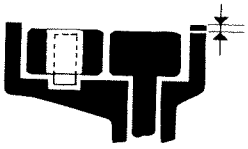 between the upper edge of the gears and the pump cover	0,016 ÷ 0,086
Full flow filter	cartridge
Insufficient oil pressure sender unit	electrical
 between drive gear and driven gear	0,30
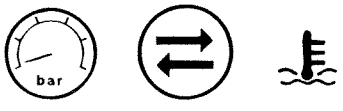 at 4000 rpm Operating pressure at a temperature of 100°C	5 ÷ 5,5 bar
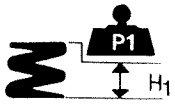 P_1	11,73 ÷ 12,51 daN
Oil pressure relief valve spring H_1	35

COOLING SYSTEM

		2387 JTD	
Cooling circuit		coolant circulation via centrifgual pump, radiator, expansion tank and two speed electric fan controlled by thermostatic switch	
Water pump operation		through belt	
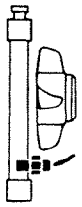 Thermal switch to engage fan		1st speed	2nd speed
		86° ÷ 90°C	90° ÷ 94°C
	stop	81° ÷ 85°C	85° ÷ 89°C
Engine coolant thermostat	opening	78° ÷ 82°C	
	max opening	86° ÷ 90°C	
	valve travel	7,5 mm	
Pressure for checking sys. water tightness		0,98 bar	
Pressure for checking exhaust valve on expansion tank cap		0,98 bar	

FUEL SYSTEM

Firing order	1 - 2 - 4 - 5 - 3
Rotary type injection pump	RADIALJET
Nozzle type	–
Injector setting pressure	⩽ 1300 bar
Injection pump timing: with piston for cylinder n°1 at TDC (compression stroke)	piston stroke = 0,7 mm
Engine idle speed	–
Maximum free running engine speed	–

Copyright by Fiat Auto

INJECTION SYSTEM COMPONENTS	2387 JTD
Injection system electronic control unit	COMMON RAIL-EDC 15C
Supercharging pressure sender unit	0.281.002.215
Fuel temperature sensor	0.281.002.209
Electric fuel pump	0.580.464.984
Air flow meter	0.280.218.019
Fuel pressure sensor	0.281.002.210
Coolant temperature sensor	0.281.002.209
Timing sensor	0.281.002.213
TDC and rpm sensor	0.281.002.214
Potentiometer on accelerator pedal	0.281.002.202
Pressure regulator (DRV)	–
E.G.R. solenoid valve	BORGWARNER - BITRON

SUPERCHARGING (with turbocharger operated by exhaust gases with waste gate valve)

Variable geometry compressor	GARRET VNT25
Maximum supercharging pressure	1,05 bar

Air supply circuit diagram

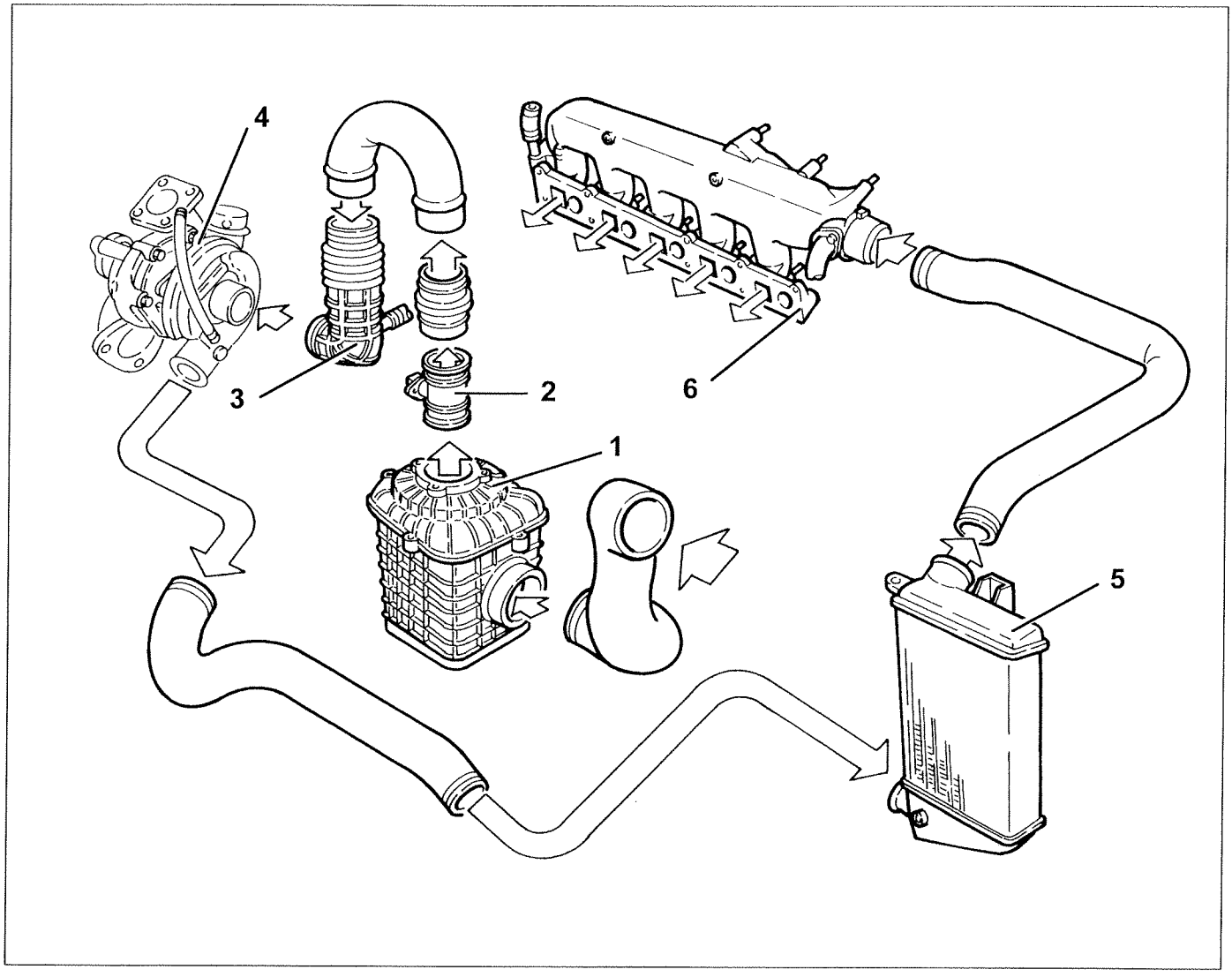

P3U65LA01

1. Complete air filter
2. Intake air flow meter
3. Hose
4. Turbocharger
5. Air-air heat exchanger (inter-cooler)
6. Inlet manifold

Copyright by Fiat Auto

	1998 20v	2446 20v	1998 20v turbo / 2959 V6 24v	2387 JTD
	Values in mm			
Type	dry, single plate			
Operating mechanism	diaphragm spring			
Spring loading daN	485	525	650	620
Driven disc Ø1	228,6		235	
Driven disc Ø2	155		155	
Distance between pedal in end of travel position and rest position	132,7 ÷ 138,7			
Clutch release	hydraulic			
Clutch pump operation Ø	18,75 (3/4")			
Operating cylinder Ø	25,4 (1")			

	1998 20V	2446 20V	1998 20V	2959 V6 24V	2387 JTD
	1 3 5 / 2 4 R				
Type	C.530.5.24	C.530.5.24	C.530.5.31	C.530.5.31	C.530.5.31

GEARBOX

Synchronizers	spring ring (Porsche type)	–				
	baulk ring type	1 3 5 / 2 4				
Gears	straight toothed	1 3 5 / 2 4 R				
	helical toothed	1 3 5 / 2 4				
Gear ratios	1	3,800	3,800	3,800	3,500	3,800
	2	2,235	2,235	2,235	2,235	2,235
	3	(1,360) ○ (1,520) ●	1,520	1,360	1,520	1,360
	4	(0,971) ○ (1,156) ●	1,156	0,971	1,156	0,971
	5	(0,811) ○ (0,914) ●	0,914	0,811	0,914	0,707
	R	3,545	3,545	3,545	3,545	3,545

DIFFERENTIAL

Ratio	crown wheel and pinion reduction	(16/57) ○ (3,563)	16/57 (3,563)	16/57 (3,563)	17/57 (3,353)	16/57 (3,563)
		(16/63) ● (3,937) ●				

● For Power Drive Version (Saloon)
○ Comfort Drive Version (Saloon)

Copyright by Fiat Auto

GEARBOX DIFFERENTIAL		1998 20v	2446 20v	1998 20v turbo	2959 V6 24v	2387 JTD
Ratio at the wheels	1 (13,539) ○ / (14,961) ●	13,539	13,539	11,735	13,539	
	2 (7,963) ○ / (8,799) ●	7,963	7,963	7,494	7,963	
	3 (4,846) ○ / (5,984) ●	5,416	4,846	5,096	4,846	
	4 (3,459) ○ / (4,551) ●	4,119	3,459	3,876	3,459	
	5 (2,889) ○ / (3,598) ●	3,257	2,889	3,065	2,519	
	R (12,631) ○ / (13,957) ●	12,631	12,631	11,886	12,631	
Differential internal casing bearing		conical roller bearings				
Adjustment of bearing pre-loading		by shims				
Thickness of shims	mm	1,25 ÷ 1,60				
Bearing rolling torque	daNm	0,10 ÷ 0,14				
Clearance between planet & sat. gears	mm	0,10 ÷ 0,20				
Adjust. of clrnce btwn planet & sat. gears		by shims				
Thickness of shims	mm	1,8 ÷ 2,2				

(○) For Comfort Drive Version (Saloon)
(●) For Power Drive Version (Saloon)

AISIN AUTOMATIC TRANSMISSION

ENGINE TYPE	1998 20v	2446 20v
Gears	❶❷❸❹Ⓡ	
Gear ratios ❶	3,606:1	3,606:1
Gear ratios ❷	2,060:1	2,060:1
Gear ratios ❸	1,366:1	1,366:1
Gear ratios ❹	0,982:1	0,982:1
Gear ratios Ⓡ	3,949:1	3,949:1
Idler ratio	56/57 (0,982)	
Torque converter ∅ mm	241	
Ratio (multiplication) drive torque	1,99	
Quantity of oil GI/2● — 1st filling	7,5 l (6,8 Kg)	
Quantity of oil GI/2● — periodic replacement	3 l (2,7 Kg)	

(●) "DEXRON II" type oil for automatic transmissions

DIFFERENTIAL

Ratio crown wheel and pinion reduction	61/23 2,652:1	69/26 2,654
Ratio at the wheels ❶	9,563:1	9,570:1
Ratio at the wheels ❷	5,463:1	5,467:1
Ratio at the wheels ❸	3,623:1	3,625:1
Ratio at the wheels ❹	2,604:1	2,606:1
Ratio at the wheels Ⓡ	10,473:1	10,481:1

Copyright by Fiat Auto

Z.F. AUTOMATIC TRANSMISSION

ENGINE TYPE	2959 V6 24v
Gears	1 2 3 4 R
Gear ratios 1	2,579:1
Gear ratios 2	1,407:1
Gear ratios 3	1:1
Gear ratios 4	0,742:1
Gear ratios R	2,882:1
Idler ratio	55/56 (0,982)
Torque converter ⌀ mm	260
Ratio (multiplication) drive torque	2,296
Quantity of oil — total, with gearbox converter, radiator and pipes empty	8,2 kg
Quantity of oil — for replacement only	4,5 Kg

GI/A

DIFFERENTIAL

	SW	SALOON	COUPÉ
Ratio crown wheel and pinion reduction	75/22 (3,409)		
Final ratio	55/56 × 75/22 (3,348)		
Ratio at the wheels 1	8,634 :1		
Ratio at the wheels 2	4,711 :1		
Ratio at the wheels 3	3,348 :1		
Ratio at the wheels 4	2,484 :1		
Ratio at the wheels R	9,649 :1		

FRONT BRAKES

		1998 20v	2446 20v / 2387 JTD	1998 20v / 2959 V6 24v
		Values in mm		
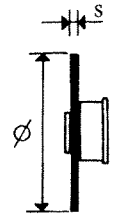 Disc	ø	280,800 ÷ 281,200		309,800÷310,200
	s	21,900÷22,100	25,900÷26,100	27,900÷28,100
	s (worn)	20,55	24,55	26,90
	s allowed	20,2	24,2	26,20
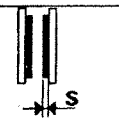 Brake pads	s allowed	1,5		
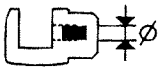 Caliper	ø	54	57	Twin caliper with 4 pistons ø1=38 ø2=42
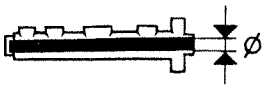 Master cylinder (pump)	ø	23,812 (15/16")		
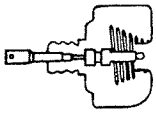 Brake servo		LUCAS 10" pneumatic vacuum servo on all four wheels	LUCAS 10" pneumatic vacuum servo acting on all four wheels	LUCAS 10" (●) LUCAS 8"+9" (■) pneumatic vacuum servo acting on all four wheels

● For 1998 20v version
■ For 2959 V6 24v version

REAR BRAKES

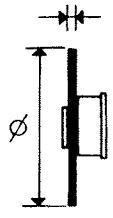 Disc	ø	275,800 ÷ 276,200
	s	9,80 ÷ 10,10
	s (worn)	9,35
	s allowed	9
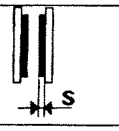 Brake pads	s allowed	1,5
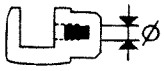 Caliper	ø	38

00.41

Type		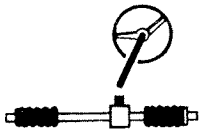 rack and pinion power assisted	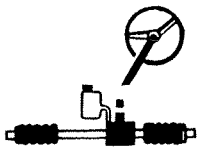 electronically controlled rack (servotronic)
 Ratio	  no. of turns lock to lock	3	
	 rack travel	153 mm (144,5 mm)*	
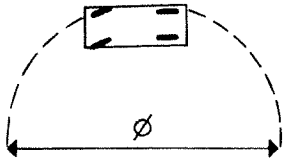 Turning circle		10,90 m	12,20 m
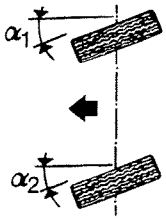 Steering angle	outer wheel α_1	32° 28′ (28° 43′)*	
	inner wheel α_2	36° 56′ (31° 46′)*	
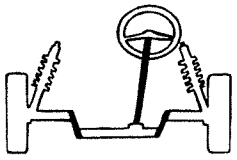	Steering col.	 with 2 universal joints	

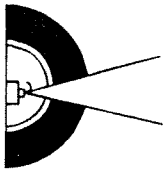



unladen car (*)

WHEEL GEOMETRY		SALOON	SW	COUPÉ
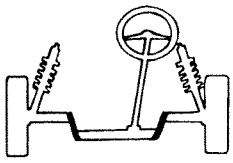 Front suspension	camber (**) 	-0° 35′ ÷ -1° 15′		-1° 20′÷ -0° 40′
	caster (**) 	2° 50′ ÷ 3° 30′		3°÷3° 40′
	toe in 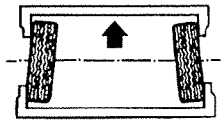	-1 ÷ 1		
	front wheel offset ▲	0°		
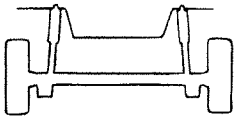 Rear suspension	camber (**) 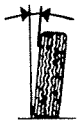	-0° 25′ ÷ -1° 5′		-1° 5′÷ -0° 25′
	caster (**) 	–		1° 45′÷ 2° 25′
	toe in 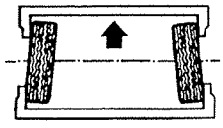	1,5 ÷3,5 mm		2 ÷ 4 mm
	rear wheel thrust angle ▲	0°		

(*) With tyres inflated to the correct pressure and vehicle in running order
(**) Angles cannot be adjusted
(▲) Angular values which cannot be adjusted, used for the correct alignment of the vehicle

Copyright by Fiat Auto

TYRES

ENGINE TYPE	 Radial, tubeless type tyre		  Inflation pressure			
			Front		Rear	
	fitted as standard	available on request	average load	heavy load	average load	heavy load
1998 20v	195/65 R15 91V	205/60 R15 91V	2,2 bar	2,3 bar	2,2 bar	2,3 bar
2446 20v	205/55 R16 89W (■)		2,2 bar	2,3 bar	2,2 bar	2,3 bar
1998 20v turbo	205/55 ZR16 99W 205/55 R16 89W (■)		2,2 bar	2,3 bar	2,2 bar	2,3 bar
2959 V6 24v	205/60 R15 91W 205/55 R16 89W (■)		2,2 bar	2,3 bar	2,2 bar	2,3 bar
2387 JTD	195/65 R15 91V	205/60 R15 91V	2,2 bar	2,3 bar	2,2 bar	2,3 bar

WHEEL RIMS

ENGINE TYPE	 Wheel rim
1998 20v 2446 20v 2387 JTD 2959 V6 24v	6½ J15 H2 - 6½J16 H2 31 (■)
1998 20v turbo	6½ J16 H2 - 6½J16 C31 (■)
	7 J16 H2 - 7J16 C31 (■)

(■) For Coupé version

NOTE *All versions have a spare wheel with a 4B×15 H rim and T 125/90 R15 96M tyre. Speed limit: 80 Kph. Inflation pressure: 4,2 bar*

Front suspension independent. Lower track control arms; dampers incorporated with the double acting, hydraulic shock absorbers, coil springs and anti-roll bar.

Coil springs

ENGINE TYPE		1998 20v	2446 20v / 1998 20v (●)	1998 20v turbo / 2387 JTD / 2446 20v (●)	2959 V6
Diameter of wire mm		14,25÷14,35			
Number of turns		3,6			
Direction of coil		clockwise			
Height of spring released mm		374	385	395	406
Height of spring under a load of:	412 daN mm	185	-	-	-
	436 daN mm	-	185	-	-
	458 daN mm	-	-	185	-
	483 daN mm	-	-	-	185
The springs are subdivided into two categories, identifiable by a mark					
yellow (1) for those under a load of:	412 daN height of mm	>185	-	-	-
	436 daN height of mm	-	>185	-	-
	458 daN height of mm	-	-	>185	-
	483 daN height of mm	-	-	-	>185
green (1) for those under a load of:	412 daN height of mm	⩽185	-	-	-
	436 daN height of mm	-	⩽185	-	-
	458 daN height of mm	-	-	⩽185	-
	483 daN height of mm	-	-	-	⩽185

(1) Springs of the same category must be fitted.

Shock absorbers

Type:	hydraulic telescopic, double acting
Open (start of damping action)	505 ÷ 511
Closed (metal against metal) mm	351 ÷ 357
Travel mm	154

(●) Vehicles with air conditioning

Anti-roll bar

Diameter of anti-roll bar mm	21

Copyright by Fiat Auto

00.44

Rear suspension independent. Longitudinal and transverse rods, telescopic dampers incorporated with the double acting, hydraulic shock absorbers, coil springs and anti-roll bar.

		1998 20v	2446 20v	1998 20v turbo	2959 V6 24v	2387 JTD
Coil springs		**SALOON**				**SW**
Diameter of wire	mm	12,35÷12,45				12,25÷12,35
Number of turns		4,93				3,20
Direction of coil		clockwise				
Height of spring released	mm	336,19				228
Height of spring under a load of: 5 daN	mm	195				
The springs are subdivided into two categories, identifiable by a mark yellow (1) for those under a load of: 279,5 daN	height of mm	> 195				
green (1) for those under a load of: 279,5 daN	height of mm	⩽ 195				

(1) Springs of the same category must be fitted.

Shock absorbers

Type		hydraulic, telescopic, double acting	
Open (start of damping action)	mm	721 ÷ 727	
Closed (metal against metal)	mm	529,2 ÷ 535,2	
Travel	mm	191,8	194,7

Rear suspension independent. Longitudinal and transverse rods, telescopic dampers incorporated with the double acting, hydraulic shock absorbers, coil springs and anti-roll bar.

Coil springs

			2446 20v / 1998 20v turbo / 2959 V6 24v
			COUPÉ
Diameter of wire		mm	11,95÷12,05
Number of turns			3,83
Direction of coil			clockwise
Height of spring released		mm	327,60
Height of spring under a load of:	254,9 ±10 dN	mm	195
The springs are subdivided into two categories, identifiable by a mark			
yellow (1) for those under a load of:	254,9 dN	height of mm	> 195
green (1) for those under a load of:	254,9 dN	height of mm	⩽ 195

(1) Springs of the same category must be fitted.

Shock absorbers

Type		hydraulic telescopic, double acting
Open (start of damping action)	mm	724
Closed (metal against metal)	mm	532,2
Travel	mm	191,8

Copyright by Fiat Auto

	 1998 20v	 2446 20v	 1998 20v turbo	 2959 V6 24v
STARTER MOTOR	M.Marelli E 70R-12V-1,4 kW (with reduction gear)			Bosch ⌀74,5-12V-1,4kW (with reduction gear)
ALTERNATOR	M.Marelli A 127I-14V-55/100A Bosch NC-14V-60/120A (*)			Bosch NC-14V-60/120A
VOLTAGE REGULATOR	BUILT IN ELECTRONIC			
BATTERY	12V - 60Ah		12V - 60Ah - 380A	12V - 60Ah - 320A
IGNITION SYSTEM	Bosch Motronic M3.1 integrated electronic injection/ignition	Bosch Motronic M3.1 integrated electronic injection/ignition	Bosch Motronic M2.10 integrated electronic injection/ignition	Bosch Motronic M2.1 integrated electronic injection/ignition
IGNITION COIL	0.221.504.006 (1 per spark plug)		Bosch 0.221.504.006	Bosch 0.221.504.456 (1 per spark plug)
POWER MODULE	–	–	–	–
SPARK PLUGS	LANCIA 7GBMSR Champion RCBBYC	LANCIA 7GBMSR Champion RC8BYC	Bosch FRGKTC	NGK PFR6B

(*) For vehicles equipped with air conditioning

	2387 JTD
STARTER MOTOR	M. Marelli E 70R - 12V - 1,4kW (with reduction gear)
ALTERNATOR	Bosch NC - 14V - 60/120A
VOLTAGE REGULATOR	BUILT IN ELECTRONIC
BATTERY	12V - 70Ah - 450A
PRE-HEATING ELECTRONIC CONTROL UNIT	Bosch 0.281.003.015
HEATER PLUGS	Bosch 0.250.202.028

Copyright by Fiat Auto

STARTER MOTOR		1998 20v	2446 20v	1998 20v turbo	1998 20v turbo	2959 V6 24v	2387 JTD
Type		M.MARELLI E70R - 12V - 1,4kW (with reduction gear)			BOSCH ø74,5 - 12 V - 1,4 kW (with reduction gear)		M. Marelli E 95R - 12 V - 2,2 kW (with reduction gear)
Voltage	V	12					
Nominal power	kW	1,4					2,2
Rotation, pinion side		clockwise					
No. of poles		4			6		4
Field coil windings		series			permanent magnets		series - parallel
Engagement		free wheel					
Operation		solenoid					
End float of armature shaft	mm	0,15 ÷ 0,45					
Data for bench test							
Operating test (*):							
current	A	360 ÷ 380			360		600
speed	rpm	1150			1800		1400
voltage	V	8,15			8,5		7,9
torque developed	daNm	1,30			0,98		1,6
Engagement test (*):							
current	A	680 ÷ 700			690 ÷ 730		1110 ÷ 1150
voltage	V	4,9			4,8 ÷ 5,2		4,4 ÷ 4,6
torque developed	daNm	3,11			2,15		⩾3,9
Free running test (*):							
current	A	60 ÷ 80			25 ÷ 40		120 ÷ 140
voltage	V	11,1			11,8 ÷ 12		11
speed	rpm	4040			3000 ÷ 4000		4500 ÷ 4750
Relay							
Winding resistance (*)	pull in Ω	0,33 ÷ 0,37			0,32 ÷ 0,36		0,23 ÷ 0,27
	hold in Ω	1,13 ÷ 1,27			1,65 ÷ 1,95		0,93 ÷ 1,07
Lubrication Internal splines and shaft bushes		VS⁺ SAE 10 W					
Engagement sleeve and intermediate disc		TUTELA MR3					

(*) Data obtained at an ambient temperature of 20°C.

NOTE *When overhauling it is not advisable to undercut the insulator between the commutator bars*

STARTER MOTOR - TYPICAL CURVES

M. Marelli E 70R - 12 V - 1,4 kW

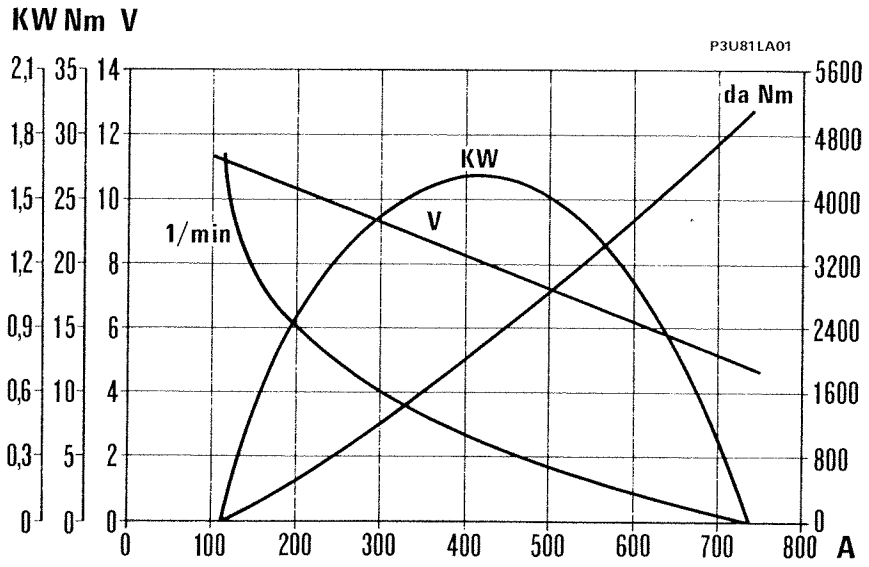

Bosch ø 74,5 - 12 V - 1,4 kW

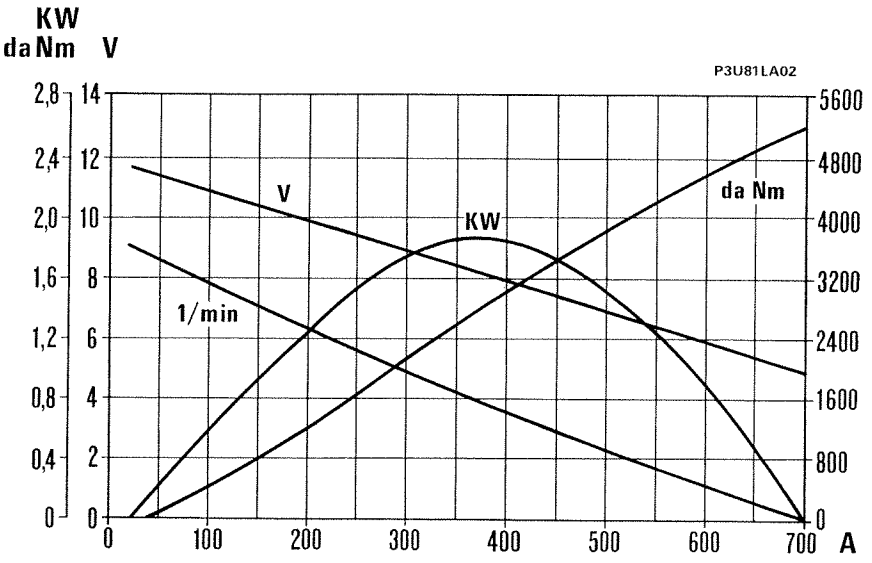

M. Marelli E 95R - 12 V - 2,2 kW

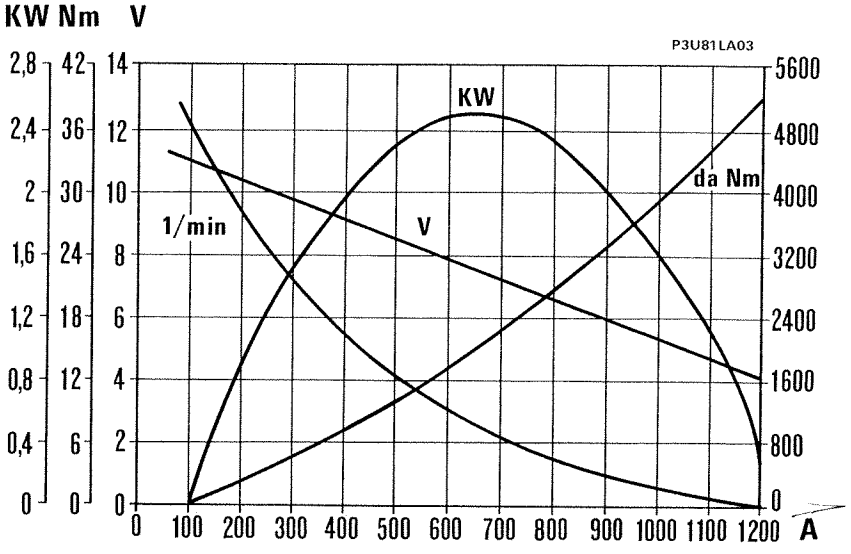

Copyright by Fiat Auto

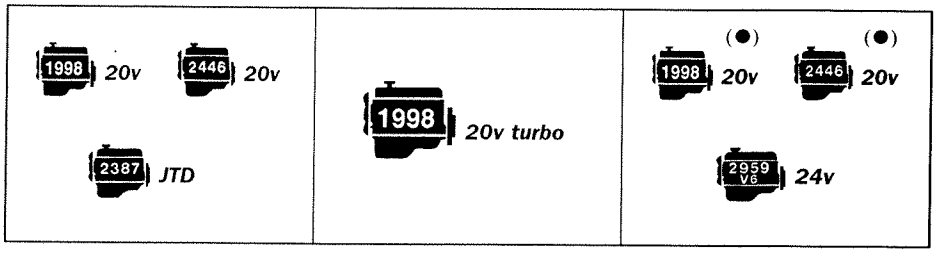

ALTERNATOR

Type		M. Marelli A127I-14V-55/100A	M. Marelli A127IR-14V-55/100A N1-14V-40/115A	Bosch NC - 14V - 60/120A
Nominal voltage	V	14		
Nominal current at 1800 rpm	A	55	55	60
Cut in speed when warm	rpm	–	⩽ 1100	⩽ 1100
Current delivery on the battery at 7000 rpm at operating temperature	A	100	100	> 120
Field winding resistance between the slip rings (*)	Ω	2,47 ÷ 2,73 (*)	2,587 ÷ 2,613	–
Direction of rotation (seen from control side)		clockwise		
Diode rectifiers		bridge		

(*) Data obtained at an ambient temperature of 20°C.
(●) For vehicles with air conditioning
(**) Data obtained at an ambient temperature of 25°C

VOLTAGE REGULATOR

Type		Built in electronic		
		24 TR/B RTM 151 B	Bosch EL - 14V - 4C	Bosch
Alternator speed for test	rpm	7000	6000	6000
Thermal stabilization current	A	50 ÷ 55	40 ÷ 45	55 ÷ 60
Test current	A	50 ÷ 55	40 ÷ 45	55 ÷ 60
Regulation voltage (*)	V	14,35 ÷ 14,55 (*)	14 ÷ 14,3 (*)	14,35 ÷ 14,65 (**)

(*) Data obtained at an ambient temperature of 20°C.
(**) Data obtained at an ambient temperature of 25°C.

ALTERNATORS - WIRING DIAGRAMS AND TYPICAL OUTPUT CURVES
(at operating temperature at a constant voltage of 13.5 V with bedded in brushe)

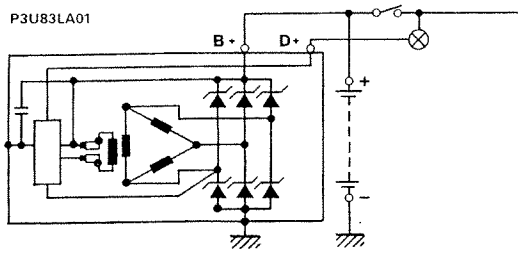

M. Marelli A 127I - 14V - 55/100A
M. Marelli A 127IR - 14V - 55/100A

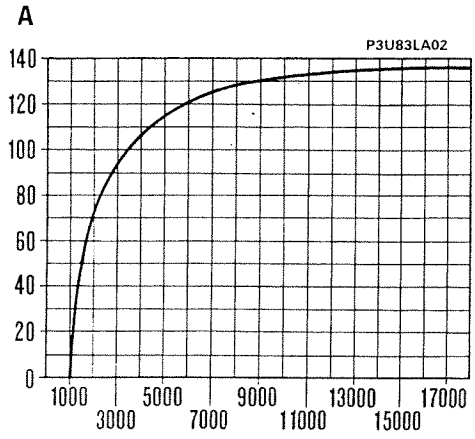

Bosch NC - 14 V - 60/120 A

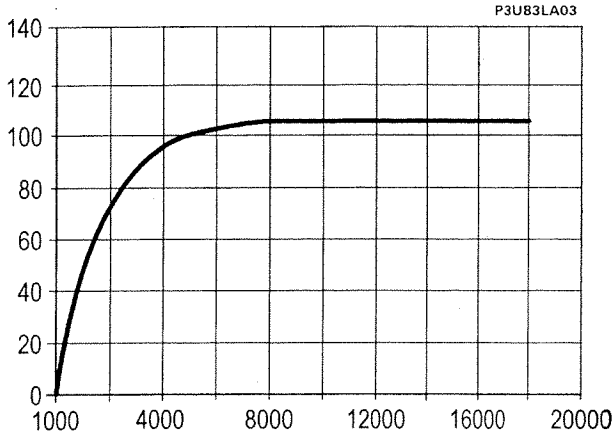

M. Marelli A 127IR - 14V - 55/100A
M. Marelli A 127I - 14V - 55/100A

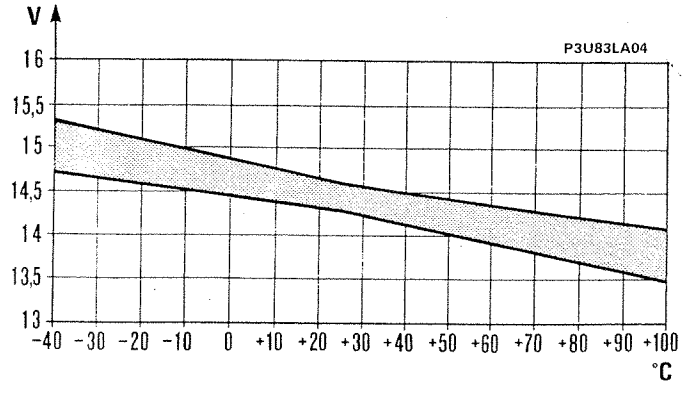

Typical voltage regulator curve for Bosch NC - 14V -60/I20A alternator

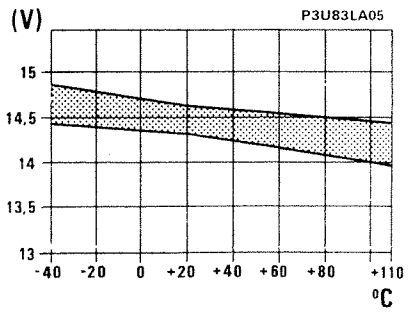

Typical voltage regulator curve for M. Marelli A 127IR - 14V-55/100A - A127I-14V-55/100A alternator

Copyright by Fiat Auto

00.55

CONTROL MODULE BOSCH MOTRONIC INTEGRATED ELECTRONIC INJECTION/IGNITION

	1998 20v	2446 20v	1998 20v turbo
Make Bosch	0.261.203.670	0.261.203.669	0.261.204.483
Firing order	1 - 2 - 4 - 5 - 3		

IGNITION COIL (1 PER SPARK PLUG)

Make	Bosch	
Type	0.221.504.014	0.221.504.006
Ohmic resistance of primary winding at 20 °C Ω	0,4	
Ohmic resistance of secondary winding at 20 °C Ω	9600	8500

TDC AND RPM SENSOR

Make and type	Bosch 0.261.210.119
Sensor winding resistance at 20 °C Ω	774 ÷ 946
Distance (gap) between sensor and crankshaft pulley tooth mm	0,8 ÷ 1,5

DETONATION SENSOR

Make	Bosch	
Type	0.261.231.007	0.261.231.095

SPARK PLUGS

Make and type	Champion RC8BYC	Bosch FR6KTC
Thread	M 14 x 1,25	
Electrode gap mm	0,8 ÷ 1	0,7 ÷ 0,9

BOSCH MOTRONIC M3.7 INTEGRATED ELECTRONIC INJECTION/IGNITION CONTROL MODULE	
Make and type	Bosch 0.261.203.482
Firing order	1 - 4 - 2 - 5 - 3 - 6

IGNITION COIL (1 PER SPARK PLUG)

Make		Bosch
Type		0.221.504.456
Ohmic resistance of primary winding at 20 °C	Ω	-
Ohmic resistance of secondary winding at 20 °C	Ω	-

T.D.C. SENSOR

Make and type		Bosch 0.261.210.104
Sensor winding resistance at 20 °C	Ω	–
Distance (gap) between sensor and crankshaft pulley tooth	mm	–
Distance (gap) between sensor and engine flywheel tooth	mm	0,8 ÷ 1,5

DETONATION SENSORS

Make and type	Bosch 0.261.231.095 Bosch 0.261.231.007

ENGINE RECOGNITION AND TIMING SENSOR

Make and type	Bosch 0 232.103.009

ADVANCE ON ENGINE

With engine idling (700±50 rpm)	–

SPARK PLUGS

Make and type		NGK PFR6B
Thread		M14 × 1,25
Electrode gap	mm	0,6 ÷ 0,7

Copyright by Fiat Auto

Tool number	DESCRIPTION OF TOOL	ENGINE TYPE				
		1998 20v	2446 20v	1998 20v turbo	2959 V6 24v	2387 JTD
ENGINE						
1846011000	Tool for extracting rear bearing cap (to be used with 1860782000)				●	
1850132000	Spanner (13 mm), with 1/2" socket, for removing inlet manifold fixings	●	●	●	●	●
1850184000	Spanner for removing and refitting spark plugs	●	●	●	●	
1852154000	Spanner for cylinder head tightening	●	●	●		●
1852159000	Spanner for removing and refitting belt tensioner	●	●	●		●
1852160000	Spanner for ante-chamber plug					●
1852161000	Spanner for phase transformer	●	●	●		
1852162000	Spanner for puleggia alternatore	●	●	●	●	
1852163000	Spanner for alternator pulley					●
1852164000	Spanner for adjusting timing pullies				●	
1854050000	Spanner for speedometer sensor	●	●		●	●
1857511000	Spanner for refrigerant gas pipe connector	●	●		●	●
1860162000	Pressure gauge with unions for checking engine oil pressure (scale 0-9,81 bar)				●	
1860183000	Pliers (⌀ 75-110 mm) for removing and refitting piston rings	●	●	●	●	●
1860251000	Drift for extracting connecting rod pin				●	
1860224000	Tool for fitting gasket on camshaft					●
1860303000	Tool for fitting gudgeon pin circlips on piston				●	
1860313000	Drift for fitting oil seal on valve guides	●	●	●		●

Tool number	DESCRIPTION OF TOOL	ENGINE TYPE				
		1998 20v	2446 20v	1998 20v turbo	2959 V6 24v	2387 JTD
1860395000	Drift for fitting oil seal on valve guides	●	●	●	●	●
1860443000	Lever to insert tappet retainer during valve clearance adjustment					●
1860454000	Drift for fitting oil seal on valve guides	●	●	●	●	
1860470000	Tool for supporting cylinder head whilst overhauling	●	●	●		●
1860490000	Tool for retaining valve leakage test equipment 1895868000 (to be used with 1860470000)					●
1860644000	Tool for removing and refitting valves					●
1860662000	Tool to remove oil filter	●	●	●	●	●
1860700000	Piston ring compressor (60-125 mm dia) for standard and oversize piston fitting into cylinders	●	●	●	●	●
1860724000	Tool for retaining tappets whilst replacing shims					●
1860757000	Tool to remove oil filter				●	●
1860758000	Tool to remove oil filter	●	●	●		
1860765000	Tool for retaining camshaft drive pulley or auxiliary shaft pulley whilst adjusting fixing bolt					●
1860779000	Flywheel lock (at the bench)				●	
1860780000	Tool for fitting seal on crankshaft (timing side)				●	
1860782000	Fork for extracting rear bearing cap (to be used with 1846011000)				●	
1860783000	Adjustable support for overhauling cylinder head (to be used with 1860784000)				●	
1860784000	Fork for supporting cylinder head whilst overhauling (to be used with 1860783000)				●	
1860785000	Tool for fitting oil pump drive shaft seal				●	

Tool number	DESCRIPTION OF TOOL	ENGINE TYPE				
		1998 20v	2446 20v	1998 20v turbo	2959 V6 24v	2387 JTD
1860786000	Tool for supporting valves whilst removing				●	
1860787000	Tool for supporting valves whilst removing (to be matched with 1860786000)				●	
1860788000	Hook for fixing lever 1860790000 for removing valves				●	
1860790000	Lever for removing valves (to be used with 1860788000)	●	●	●	●	
1860794000	Tool for fitting rear bearing support pipes (flywheel side)				●	
1860804000	Support for cylinder head whilst removing- refitting valves					●
1860810000	Dummy reference spark plug for ante-chamber					●
1860812000	Drift for removing valve guide	●	●	●	●	●
1860813000	Drift for fitting oil seal on valve guides	●	●	●		
1860814000	Drift for fitting oil seal on valve guides					●
1860815000	Tool for rotating crankshaft	●	●	●	●	●
1860816000	Drift for fitting oil pump gasket	●	●	●		●
1860817000	Tool for centering crankshaft cover	●	●	●		●
1860818000	Tools for camshaft timing	●				
1860819000	Tools for camshaft timing		●			
1860820000	Tools for timing camshaft				●	
1860821000	Tools for removing small end bush			●	●	●
1860822000	Tools for timing oil pump	●	●	●		●

Tool number	DESCRIPTION OF TOOL	ENGINE TYPE				
		1998 20v	2446 20v	1998 20v turbo	2959 V6 24v	2387 JTD
1860823000	Tool for removing and refitting power unit	●	●		●	●
1860823001	Set of adapators for tool	●	●		●	●
1860824000	Tool for fitting camshaft element	●	●	●		●
1860825000	Bracket with counter-weight for tensioning timing drive belt		●		●	●
1860826000	Bush for tensioning auxiliary shaft drive belt		●		●	●
1860827000	Bush for tensioning timing drive belt				●	
1860828000	Tool for removing SUBAKI tensioner (auxiliary shaft drive belt)				●	
1860829000	Adjustable tools for securing cylinder liners/bores				●	
1860830000	Pin for SUBAKI tensioner				●	
1860831000	Spanner for rotating timing pullies	●	●	●	●	●
1860832000	Spanner for tightening cylinder head fixing nuts				●	
1860833000	Spanner for removing-refitting oil sump	●	●	●		●
1860834000	Spanner for removing-refitting oil sump	●	●	●		●
1860835000	Tool for extracting oil seal on valve guide	●	●	●	●	●
1860836000	Tool for locking crankshaft rotation	●	●	●		●
1860839000	Pin for timing drive belt tensioner				●	
1860840000	Tool for dismantling valves (to be fitted to lever 1860790000)			●	●	
1860841000	Flywheel lock (on vehicle)				●	

Copyright by Fiat Auto

Tool number	DESCRIPTION OF TOOL	ENGINE TYPE				
		1998 20v	2446 20v	1998 20v turbo	2959 V6 24v	2387 JTD
1860842000	Tool for removing oil pump ilder bushes				●	
1860843000	Tool for fitting crankshaft seal (flywheel side)				●	
1860844000	Tool for fitting timing side crankshaft seal	●	●	●		
1860846000	Engine flywheel lock	●	●	●		
1860854000	Tool for extracting pressure pump pulley					●
1860856000	Spanner for adjusting timing pulley inlet side	●	●	●		
1860859000	Supports for removing-refitting power unit (to be used with 1860860000)	●	●			
1860859002	Adaptor for removing-refitting power unit (to be used with 1860859000 and 1860860000)	●	●			
1860860002	Support for removing-refitting power unit	●	●			
1860884000	Tool for removing-refitting ante-chamber fixing bush					●
1860888000	Tool for extracting/introducing power assisted steering pump support bearing	●	●			
1860893000	Spanner for fuel pump cover	●	●			
1860892000	Tool for timing camshafts	●	●	●		
1860894000	Spanner for air conditioning compressor adjustment nut	●	●			
1860895000	Support for dial gauge for determining T.D.C.			●	●	
1860898000	Flywheel lock (on vehicle)	●	●			●
1860905000	Tool for deteriming T.D.C.					●
1860942000	Torque wrench for angular tightenings	●	●	●	●	●

Tool number	DESCRIPTION OF TOOL	ENGINE TYPE				
		1998 20v	2446 20v	1998 20v turbo	2959 V6 24v	2387 JTD
1860947000	Tool for fittting valve guides		●			
1860948000	Tool for fitting camshaft seals		●			
1860949000	Tool for fitting seal on crankshaft (timing side)		●			
1860950000	Tool for tensioning timing drive belt		●			
1860951000	Tool for extracting/fitting small end bush		●			
1860952000	Studs for cylinder head support whilst overhauling (to be used with 1860783000/1860784000)		●			
1860953000	Tool for extracting rear bearing cap (to be used with 186011000/186782000)		●			
1860954000	Tool for extracting camshaft pullies		●			
1860961000	Tools for camshaft timing	●	●			
1860962000	Tools for camshaft timing			●		
1861001038	Pair of brackets for fixing engine to rotating stand				●	
1861001039	Pair of brackets for fixing engine to rotating stand	●	●	●		●
1867029000	Flywheel lock	●	●	●		
1870404000	Support for dial gauge for measuring cylinder liner recess or projection	●	●	●	●	●
1870726000	Spanner for tightening camshaft pulley, extraction side, to torque			●		
1870739000	Tool for extracting injectors					●
1890385000	Reamer for valve guide openings	●	●	●	●	
1895762000	Dynamometer for checking auxiliary shaft drive belt tension	●		●		

Copyright by Fiat Auto

Tool number	DESCRIPTION OF TOOL	ENGINE TYPE				
		1998 20v	2446 20v	1998 20v turbo	2959 V6 24v	2387 JTD
1895868000	Valve leakage test equipment	●	●	●		●
1895879000	Tool for checking T.D.C. for piston for cylinder no. 1 (to be used with 1895881000)	●	●	●	●	
1895882000	Dial gauge for measurements (to be used with support 1870404000)	●	●		●	●
1895890000	Fuel pump delivery pressure gauge with unions	●		●		
1895897000	Graduated disc for angular tightening of cylinder head fixing nuts	●	●		●	●

CLUTCH

1870081000	Guide pin for centering clutch disc			●		●
1870447000	Guide pin for centering clutch disc				●	
1875029000	Guide pin for centering clutch disc	●	●			
1875084000	Tool for removing thrust bearing from clutch engagement mechanism	●	●	●	●	●

Tool number	DESCRIPTION OF TOOL	ENGINE TYPE				
		1998 20v	2446 20v	1998 20v turbo	2959 V6 24v	2387 JTD

GEARBOX AND DIFFERENTIAL

1840005001	Universal extractor	●	●	●	●	●
1840005103	Tool for universal extractor 1840005001	●	●	●	●	●
1840005400	Clamp	●	●	●	●	●
1840206001	Element	●	●	●	●	●
1840207814	Tool for extracting fork pin bush (to be used with 1840206001)	●	●	●	●	●
1846001001	Pair of drive shafts for extracting main shaft bearings	●	●	●	●	●
1847017001	Basic for drive shaft extractors	●	●	●	●	●
1847017004	Flange for removing inner part of left drive shaft (to be used with 1840206001)	●	●	●	●	●
1870007000	Tool for fitting fork pin bush	●	●	●	●	●
1870644001	Tool for removing-refitting gearbox from vehicle	●	●	●	●	●
1870647000	Plate for gauges 1870648000	●	●	●	●	●
1870648000	Gauges for determining thicknesses	●	●	●	●	●
1870649000	Reference crossmember (to be used with 1870648000)	●	●	●	●	●
1870652000	Bush for rotating main shaft	●	●	●	●	●
1870654000	Tool for removing-refitting gear engagement rod guide bushes	●	●	●	●	●
1870655000	Tool for extracting bearing outer races	●	●	●	●	●
1870656000	Tool for introducing main and lay shaft lower bearing outer races	●	●	●	●	●
1870657000	Tool for introducing main and lay shaft upper bearing outer races	●	●	●	●	●

Copyright by Fiat Auto

Tool number	DESCRIPTION OF TOOL	ENGINE TYPE				
		1998 20v	2446 20v	1998 20v turbo	2959 V6 24v	2387 JTD
1870658000	Tool for removing-refitting shafts (in three stages)	●	●	●	●	●
1870659000	Tool for fitting main shaft bearings and layshaft rear bearing	●	●	●	●	●
1870660000	Reaction base for removing layshaft front bearing	●	●	●	●	●
1870675000	Half-rings for removing-refitting gearbox shafts	●	●	●	●	●
1870676000	Half-rings for dismantling main shaft	●	●	●	●	●
1871000000	Rotating column for overhauling gearboxes and differentials	●	●	●	●	●
1871001014	Support for gearbox-differential unit whilst overhauling (to be fitted to 1861000000 or 1871000000)	●	●	●	●	●
1874290000	Plate for removing-refitting gearbox shafts	●	●	●	●	●
1874365000	Grip for tool 1870656000	●	●	●	●	●
1895655000	Tool for determining thickness of differential bearing adjustment shims (to be used with 1895844000)	●	●	●	●	●
1895655000	Tool for determining thickness of differential bearing adjustment shims (to be used with 1895844000)	●	●	●	●	●
1895881000	Dial gauge to be used with specific tools (measuring capacity 25 mm, shank length 17 mm)	●	●	●	●	●
1895884000	Dial gauge to be used with specific tools (measuring capacity 5 mm, shank length 16,5 mm)	●	●	●	●	●

BRAKES

1856132000	Spanner (10-11 mm) for adjusting brake fluid pipe unions	●	●	●	●	●
1856134000	Spanner, with ½" socket, for adjusting rear brake caliper self-adjusting device	●	●	●	●	●

Tool number	DESCRIPTION OF TOOL	ENGINE TYPE				
		1998 20v	2446 20v	1998 20v turbo	2959 V6 24v	2387 JTD
STEERING						
1840207814	Tool for removing rubber bearing	●	●	●	●	●
1847035000	Tool for extracting steering track rod ends	●	●	●	●	●
1847218000	Tool for removing steering wheel	●	●	●	●	●
1870296000	Tool for fitting bearings	●	●	●	●	●
SUSPENSION WHEELS						
1846018000	Tool for extracting flexible bush at end of rear suspension anti-roll bar	●	●	●	●	●
1860973000	Spanner for tightening shock absorber mounting	●	●	●	●	●
1857168000	Spanner for tightening shock absorber mounting	●	●	●	●	●
1857509000	Spanner for removing nut on mounting	●	●	●	●	●
1860838000	Tool for fitting rear bush	●	●	●	●	●
1867013000	Tool for fitting hub	●	●	●	●	●
1870294000	Drift for fitting bearing	●	●	●	●	●
1874555000	Pneumatic tool for compressing suspension springs	●	●	●	●	●
1875055000	Drift for fitting wheel hub bearings	●	●	●	●	●

Copyright by Fiat Auto

00.A

Tool number	DESCRIPTION OF TOOL	ENGINE TYPE				
		1998 20v	2446 20v	1998 20v turbo	2959 V6 24v	2387 JTD
ORDINARY TOOLS						
1840005000	Universal extractor	●	●	●	●	●
1840206000	Tool for removing counter-balance shaft front bearing (to be used with 1840207184)	●	●	●	●	●
1846017000	Base for puller half-rings	●	●	●	●	●
1847017001	Percussion extractor (to be used with specific tools)	●	●	●	●	●
1861000000	Rotating stand for overhauling engine (also used for gearboxes and differentials)	●	●	●	●	●
1861000001	Pair of sections for brackets supporting the engine on rotating stand 1861000000	●	●	●	●	●
1870007000	Universal handle	●	●	●	●	●
1870404000	Support for measuring recesses and projections (to be used with 1895881000)	●	●	●	●	●
1871000000	Rotating column for overhauling gearboxes and differentials	●	●	●	●	●
1876048000	Tool for extracting MINI HYLOK CONTACT (MHF) type terminals ⌀ 2,15 mm	●	●	●	●	●
1881138000	Adjustable pliers for restriction bands	●	●	●	●	●
1882002010	Tool panel to be fixed to wall or stand 1882003000 (with hooks)	●	●	●	●	●
1882003000	Stand to hold two tool panels	●	●	●	●	●
1882011000	Set of additional hooks (50) for tool panel	●	●	●	●	●
1895113000	Feeler gauge (0.05-0.10 ... 0.80 mm) for checking various clearances	●	●	●	●	●
1895881000	Dial gauge to be used with specific tools (measuring capacity mm 10; shank length mm 16,7)	●	●	●	●	●
1895882000	Dial gauge to be used with specific tools (measuring capacity mm 10; shank length mm 88)	●	●	●	●	●
1895884000	Dial gauge to be used with specific tools (measuring capacity mm 5; shank length mm 16,5)	●	●	●	●	●

Tool number	DESCRIPTION OF TOOL	ENGINE TYPE				
		1998 20v	2446 20v	1998 20v turbo	2959 V6 24v	2387 JTD
1840005001	Universal extractor	●	●	●	●	●
1840005301	Tool for universal extractor 1840005001	●	●	●	●	●
1840005400	Clamp	●	●	●	●	●
1847017004	Flange for removing inner part of left drive shaft (to be used with 1840206001)	●	●	●	●	●
1840206001	Battery earth	●	●	●	●	●
1840207814	Tool for extracting fork pin bush (to be used with 1840206001)	●	●	●	●	●
1846001001	Torque of half-rings for extracting main shaft front bearing	●	●	●	●	●
1860974000	Tool for adjusting gearbox cables	●	●	●	●	●
1870595000	Crossmember for supporting power unit	●	●	●	●	●
1870647000	Plate for gauges 1870648000	●	●	●	●	●
1870648000	Gauges for determining thicknesses	●	●	●	●	●
1870649000	Reference crossmember (to be used with 1870648000)	●	●	●	●	●
1870651000	Set of bracket for supporting engine whilst removing/refitting gearbox-differential unit	●	●	●	●	●
1870652000	Bush for rotating main shaft	●	●	●	●	●
1870654000	Tool for extracting/fitting gear engagement rod housing bushes on bell housing	●	●	●	●	●
1870655000	Tool for extracting bearing outer races (to be used with 1840206001)	●	●	●	●	●
1870656000	Tool for fitting bearing outer races (to be used with 1874365000)	●	●	●	●	●
1870657000	Tool for fitting gear engagement rod housing bushes on gearbox casing	●	●	●	●	●

Copyright by Fiat Auto

Tool number	DESCRIPTION OF TOOL	ENGINE TYPE				
		1998 *20v*	2446 *20v*	1998 *20v turbo*	2959 V6 *24v*	2387 *JTD*
1870658000	Tool for removing-refitting shafts (in three pieces)	●	●	●	●	●
1870659000	Tool for fitting main shaft bearings and layshaft rear bearing	●	●	●	●	●
1870660000	Reaction base for removing layshaft front bearing	●	●	●	●	●
1870675000	Half-rings for removing-refitting gearbox shafts	●	●	●	●	●
1870676000	Half-rings for removing main shaft	●	●	●	●	●
1870681000	Tool for supporting gearbox during extraction	●	●	●	●	●
1870719000	Tool for manually moving front seats	●	●	●	●	●
1871001014	Support for gearbox-differential unit whilst overhauling (to be fitted to 1871000000)	●	●	●	●	●
1874290000	Plate for removing-refitting gearbox shafts	●	●	●	●	●
1874365000	Grip for tool 1870656000	●	●	●	●	●
1895655000	Tool for determining thickness of differential bearing adjustment shim (to be used with 1895884000)	●	●	●	●	●

DESCRIPTION	Thread	Tightening torques daNm	ENGINE TYPE 1998 20v	2446 20v	2387 JTD	1998 20v turbo
ENGINE						
Main bearing cap fixing, bolt	M12	2,5+100°	●	●	●	●
(Dust) shield fixing, bolt	M6	0.9	●	●	●	●
Sump oil drain plug	M18x1.5	2	●	●	●	●
Oil sump fixing, bolt	M6	99	●	●	●	●
	M8	2.5				
Alternator, power assisted steering, connecting rod mounting to the crankcase fixing, bolt	M8	2.5	●	●	●	●
	M10x1.5	5				
Lytens moving belt tensioner fixing, nut for bolt	M8	2.5	●	●	●	●
Engine mounting and air conditioning compressor to the crankcase fixing, bolt	M10x1.25	5	●	●		●
		7			●	
Automatic tensioner to alternator mounting fixing, bolt	M8	2.5	●	●		●
		3.2			●	
	M10x1.5	5	●	●		●
		6			●	
Static belt tensioner to air conditioning mounting fixing, bolt	M10x1.25	5	●	●	●	●
Fixed belt tensioner to alternator mounting fixing, bolt	M8	2.5	●	●	●	●
Complete belt tensioner to mounting fixing, bolt (for versions with air conditioning)	M10x1.25	5	●	●		●
Belt tensioner to engine mounting fixing, bolt	M8	2.5	●	●		●
Fixed belt tensioner to engine mounting fixing, bolt	M10x1.25	5	●	●		●
Connecting rod plate to crankcase fixing, bolt	M10x1.25	5	●	●		●
	M8	2.5				
Engine mounting to crankcase fixing, bolt	M10x1.25	5	●	●	●	●
Cylinder head to cylinder block/crankcase fixing, bolt	M10x1.25	4+270°	●	●		●
	M12x1.25	6.5+270°			●	●
Caps to cylinder head fixing, bolt	M7	1.5	●	●	●	●
Tappet cover to cylinder head fixing, bolt	M6	0.9	●	●		●
		1			●	

00.

DESCRIPTION	Thread	Tightening torques daNm	ENGINE TYPE 1998 20v	2446 20v	2387 JTD	1998 20v turbo
Coil cover to tappet cover fixing, bolt	M6	0.9	●	●		●
Multi-polar mounting bracket to cover fixing, bolt	M6	0.9	●	●		●
Inlet manifold to cylinder head and centre section fixing, nut	M8	2.5		●	●	
Reaction bracket to manifold and driveshaft support fixing, bolt	M8	2.5	●	●	●	●
Upper section of manifold to lower section fixing, bolt	M8	2.5	●	●		●
Inlet manifold and cable duct mounting bracket, nut	M8	2.5	●	●		●
Exhaust manifold to cylinder head fixing, nut	M8	2.5	●	●	●	●
Caps fixing, bolt	M9	2.5+60°	●	●	●	●
Engine flywheel fixing, bolt	M12	16	●	●	●	●
Crankshaft gear fixing, left bolt	M16	34			●	
		36	●	●		●
Exhaust gear to camshaft fixing, bolt	M12	12	●	●		●
Timing belt tensioner fixing, bolt	M10	5	●	●	●	●
Inlet gear to phase transformer fixing, bolt	M6	0.9	●	●		●
Electric sensor to cylinder block/crankcase and Hall effect sensor to cylinder head, fixing bolt	M6	0.9	●	●	●	●
Oil pump to crankcase fixing, bolt	M6	0.9	●	●		●
		1			●	
Complete nozzle to crankcase fixing, bolt	M6	0.9	●	●	●	●
Connector for fixing heat exchanger	M20	3.6	●	●	●	●
Water pump to cylinder head fixing, bolt	M8	2.5	●	●	●	●
Coolant return pipe from the heater to the cylinder head fixing, bolt	M10x1.25	5	●	●		●

DESCRIPTION	Thread	Tightening torques	ENGINE TYPE			
			1998	2446	2387	1998
		daNm	20v	20v	JTD	20v turbo
Coolant supply pipe to the crankcase fixing, bolt	M12x1.25	5	●	●		●
Coolant supply hose to the crankcase and exhaust manifold fixing, bolt	M8	2.5	●	●	●	●
Coolant inlet pipe to the cylinder head fixing, bolt	M8	0.9	●	●		●
	M10	5				
Thermostat to cylinder head fixing, bolt	M8	2.5	●	●		●
	M7	1.5		●		
Air conditioning compressor to engine mounting fixing, bolt	M10	5	●	●	●	●
Alternator fixing, nut	M10	5	●	●	●	●
	M12	7				
Driveshaft support fixing, bolt	M10x1.25	5	●	●	●	●
Alternator reaction brackets to driveshaft fixing, bolt	M10x1.,25	5	●	●	●	●
Nut for bolt between sump and driveshaft support	M8	2.5	●	●	●	●
Power assisted steering pump to connecting rod support fixing, bolt	M8	2.5	●	●	●	●
Pulley to power assisted steering pump fixing, bolt	M8	2.5	●	●	●	●
Coolant temperature sender unit fixed to the cylinder head	M16x1.25	3	●	●	●	●
Oil pressure switch fixed to the crankcase	M14x1.5	3	●	●	●	●
Injection oil level sender unit fixed to the oil sump	M12x1.5	3	●	●		●
Coolant temperature sender unit fixed to the thermostat	M12x1.5	3	●	●	●	●
Coolant temperature sender unit fixed to the thermostat (version with automatic transmission)	M12x1.5	3	●	●		
Detonation sensor to the cylinder block/crankcase fixing, bolt	M8	2.5	●	●		●
Ignition coil fixing, bolt	M6	0.9	●	●		●
Spark plug	M14x1.25	2.7	●	●		●

00.

DESCRIPTION	Thread	Tightening torques daNm	ENGINE TYPE 1998 20v	2446 20v	2387 JTD	1998 20v turbo
Ring nut fixing injectors	M35	12			●	
Auxiliary shaft drive pulley to crankshaft fixing, bolt	M8	2.5			●	
Drive gear to camshaft fixing, bolt	M12	12			●	
Injection pump to mounting fixing, bolt	M8	2.5			●	
Injection pump to crankcase fixing, bolt	M8	2.5			●	
Injection pump to inlet manifold fixing, bolt	M8	2.5			●	
Reaction bracket to injection pump fixing, nut	M8	2.5			●	
Injection pump gear fixing, nut	M14	5			●	
Complete injector	M24	6			●	
Fuel filter to inlet manifold fixing, nut	M8	2.5			●	
Turbocharger to exhaust manifold fixing, nut	M8	2.5			●	
Exhaust manifold connector to turbocharger fixing, nut	M8	2.5			●	
Filler for fixing oil supply pipe to turbocharger	M10	1.5			●	
	M12					●
Connector for fixing thermostatic valve	M20	6			●	
Air vacuum unit to cylinder head fixing, bolt	M8	2.5			●	
EGR valve to exhaust manifold fixing, nut	M8	2.5			●	
Pipe to EGR valve fixing, bolt	M8	2.5			●	
Air pressure switch on turbocharger	M12	2			●	
Sender unit signalling oil level on engine sump	M12x1.25	3			●	

DESCRIPTION	Thread	Tightening torques daNm	ENGINE TYPE 1998 20v	2446 20v	2387 JTD	1998 20v turbo
Heater plug	M12x1.25	1.5			●	
Flywheel side cover fixing, bolt	M6	0.9	●	●	●	●
Timing belt shields (lower cover) fixing, bolt	M6	0.9	●	●	●	●
Oil inlet to cap fixing, bolt	M6	0.9	●	●		●
		1			●	
Oil dipstick fixing, bolt	M6	0.9	●	●	●	●
Oil vapour separator fixing, nut	M6	0.9			●	
Reaction bracket to exhaust manifold fixing, nut	M8	2.5			●	
Oil filter	M20	1.5	●	●	●	●
Cylinder head front water outlet filler fixing, bolt	M6	0.9	●	●	●	●
Pipe to inlet manifold fixing, nut	M6	0.9			●	
Electrical connections for heater plug fixing, nut	M4	0.3			●	
Heat shield flanged bolt	M6	0.9				●
Oil connector from turbine	M16	1.5				●
Filler for adjustable connector fixing turbine water connector	M14	1.5				●
Water inlet pipe to cylinder head special fixing, bolt	M10	5				●
Oil sump-driveshaft connection fixing, flanged bolt	M8	2.5				●
Air temperature sender unit on inlet duct	M12	3				●
Oil pressure sender unit	M14	3				●
Oil sender unit connector special fixing, bolt	M14	2.5				●

Copyright by Fiat Auto

00.

DESCRIPTION	Thread	Tightening torques daNm	ENGINE TYPE 1998 20v	2446 20v	2387 JTD	1998 20v turbo
Rod to oil sump fixing, flanged bolt	M8	2.5				●
Oil separator mounting bracke to crankcase fixing, flanged bolt	M10	5				●
Oil separator to bracket fixing, flanged bolt	M6	0.9				●
Turbocharger to exhaust manifold fixing, nut with spring	M8	2.5				●
Reaction bracket to bracket on turbocharger fixing, flanged bolt	M10	5				●
Reaction bracket to crankcase fixing, flanged bolt	M8	2.5				●
Bracket to turbocharger fixing, flanged bolt	M8	2.5				●

DESCRIPTION	Thread	Tightening torques daNm

ENGINE

Oil duct plug in crankcase	M16x1.5 M17x1.5	3.2
Bearing caps fixing, nut (*)	M12x1.5	■
Oil filter casing connector	M20x1.5	8
Coolant drain plug in crankcase	M14x1.5	3
Oil sump fixing, bolt	M7	1.5
Oil sump internal partition fixing, bolt	M6	0.6
Camshaft supports fixing, bolt	M8	1.9 (**)
Engine lifting hook fixing, bolt	M10x1.25	3
Engine support fixing, nut	M8	2.2
Connecting rod attachment plate fixing, nut	M10x1.25	4
Cylinder head fixing, nut	M12x1.5	2.5+240°
Sump oil drain plug	M22x1.5	7.5
Front cover fixing, bolt	M10x1.25	4
	M6	0.87
Electro-magnetic sensor mounting fixing, bolt	M6	0.75
Electro-magnetic sensor to mounting fixing, bolt	M6	0.75
Timing belt covers fixing, bolt	M6	0.75
Timing belt covers, nut	M6	0.51
Detonation sensor fixing, bolt	M8	2.2

(*) The tightening should be carried out after having lubricated the components with engine oil
(**) Value related to the fitting
■ When refitting the crankshaft, carry out the following stages:
1 – Tighten to 6 daNm
2 – Undo
3 – Tighten to 2.5 daNm +77°

Copyright by Fiat Auto

00.

DESCRIPTION	Thread	Tightening torques daNm
Cylinder head cover fixing, bolt	M7	1.23
Inlet chamber fixing, bolt	M6	0.51
Supply ducts fixing, bolt	M6	0.75
Left and right plate fixing, bolt	M6	0.75
Injector holder manifolds fixing, bolt	M8	2.2
Exhaust manifolds fixing, self-locking nuts	M8	2.55
Centre frame and right sector fixing, bolt	M6	0.75
Bearing caps fixing, bolt (*)	M9x0.75	5.62
Crankshaft flywheel fixing, bolt for vehicles with manual and automatic transmission	M12x1.25	12.25
Pulley to crankshaft fixing, nut (**)	M28x1.5	23.54
Pulley to camshaft fixing, bolt	M12x1.25	8
Timing cover fixing, bolt	M8	2.2
Left head cover fixing, bolt	M6	0.75
Butterfly casing fixing, bolt	M7x1	1.4
Accelerator cable attachment fixing, bolt	M6	0.51
Oil separator mounting bracket fixing, bolt	M6	0.75
Fuel pressure regulator fixing, bolt	M6	0.51
Bearing on fixed belt tensioner plate fixing, nut	M10x1.25	5
TSUBAKI tensioner fixing, nut	M8	2.2
TSUBAKI tensioner bearing fixing, nut	M12x1.25	7.5

(*) The tightening should be carried out after having lubricated the components with engine oil

(**) Use Loctite 270

DESCRIPTION	Thread	Tightening torques daNm
Moving belt tensioner plate fixing, nut	M8	2.2
Moving belt tensioner plate fixing, bolt	M8	2.2
Complete belt tensioner support fixing, self-locking nut with flange	M10x1.25	5
Tensioner bearing fixing, bolt	M10x1.25	5
Fixed tensioners support fixing, bolt	M8	2.2
Complete tensioner bearing fixing, bolt	M8	2.2
Tensioner piston fixing, nut	M8	2.2
Tensioner bearing to cylinder head fixing, bolt	M10x1.25	5
Cam angle sensor fixing, bolt	M6	0.75
Left and right fuel manifold fixing, bolt	M6	0.75
Ignition coil fixing, bolt	M6	0.75
Spark plugs	M14x1.25	2.75
Oil pump to crankcase fixing, bolt	M8	2.2
Oil pump shaft upper fixing, self-locking nuts	M6	0.51
Element to pump casing fixing, bolts	M6	0.75
Element bracket to oil sump fixing, bolts	M6	0.75
Oil pump cover fixing, bolts	M7	1.1
Connector on crankcase for oil dipstick	M14x1.25	8
Oil filter	3/4"	1
Dipstick to crankcase connector fixing, nut	M16x1.5	2.5
Thermostatic valve	M30x1.5	8.8

00.

DESCRIPTION	Thread	Tightening torques daNm
By-pass valve plug	M22x1.5	3.5
Oil filter mounting to crankcase fixing, nut	M8	2.2
Oil mounting to crankcase fixing, bolt	M8	2.2
Timing idler pulley fixing, bolts	M8	2.11
Oil pump driven gear fixing, nut	M14x1.5	9.3
Alternator mounting, bolt	M10x1.25	5
Alternator to mounting fixing, bot	M8	2.2
Power assisted steering pump mounting fixing, bolt	M8	2.2
Power assisted steering pump to mounting fixing, bolts	M8	2.2
Power assisted steering pump bracket fixing, bolt	M8	2.2
Power assisted steering pump pulley fixing, bolt	M6	0.75
Oil pressure sender unit	M10x1	1.1
Oil pressure switch	M14x1.5	2.4
Engine coolant temperature sender unit with alarm contact	M18x1.5	2.85
Water pump fixing, bolt	M6	0.87
Engine coolant inlet filler fixing, bolt	M6	0.87
Cover with thermostat fixing, bolt	M7	1.1
Engine coolant pipe mounting bracket fixing, bolt	M8	1.42
Engine coolant pipe fixing, bolt	M6	0.75
Engine coolant supply connector to heater fixing, bolt	M6	0.51
Water pump pulley fixing, bolt	M6	0.51

DESCRIPTION	Thread	Tightening torques daNm
Engine coolant temperature sender unit	M12x1.5	1.4
Idle actuator mounting fixing, bolt	M6	0.6
Bracket with belt tensioner pulley fixing, nut	M10x1.25	5
Lambda sensor	M18x1.5	5.8
Complete front and rear bracket for air conditioning compressor fixing, bolt	M10x1.25	3.35
Air conditioning compressor to brackets fixing, nut	M10x1.25	4.3
Air chamber and right head cover fixing, bolt	M6	0.51
Earth cable between coil and left head cover fixing, nut	M8	2.2
Spacer between left head and cover	M6	0.75

ENGINE EXHAUST

Rear shield centre fixing, bolt	M6	0.55
Tank shield fixing, nut	M6	0.55
Centre silencer and rear silencer fixing, bolt	M8	2.4
Rear shield left and right side fixing, bolt with flange	M6	0.55
Centre silencer shield and brake pipe retaining bracket fixing, nut with flange	M6	0.55
Front pipe to exhaust manifold fixing, self-locking nut	M8	2.4
Catalytic converter mounting bracket to bodyshell fixing, nut	M6	0.6
Bracket for front pipe to oil sump fixing, bolt	M10x1.25	2.8
Front pipe bracket collar fixing, nut with flange	M8	1.5
Front pipe to catalytic converter fixing, bolt	M8	2.4
Centre silecner shield fixing, bolt	M6	0.55

Copyright by Fiat Auto

00.

DESCRIPTION	Thread	Tightening torques daNm
Catalytic silencer to centre silencer fixing, bolt	M8	2.4
Centre shield fixing, nut with flange	M8	2.2
Front shield for catalytic converter fixing, nut with flange	M6	0.55
Exhaust pipe CO plug	M14x1.5	4
Exhaust pipe bracket fixing, bolt (versions with automatic transmission)	M8	2.5
Bracket with silentbloc to gearbox fixing, nut	M10	3.5
Front pipe to bracket on gearbox and crankcase fixing, nut	M8	2.4
U-bolt connecting front pipe fixing, nut (for 2459 V6 24v)	M8	0.8
Bracket to oil sump fixing, nut (for 2387 JTD)	M8	2.4
Connecting bracket to front pipe fixing, nut (for 2387 JTD)	M8	2.4
Front pipe fixing, nut (for 2387 JTD)	M8	2.4
Pipe to turbo fixing, nut (for 2387 JTD)	M10	2.8

DESCRIPTION	Thread	Tightening torques daNm

POWER UNIT MOUNTING

Bracket, gearbox side, to gearbox cover fixing, nut	M10x1.25	5
Flexible mounting to bracket fixing, nut	M10x1.25	4.5
Front and rear mounting to engine support fixing, nut	M10x1.25	4.5
Front and rear mounting to frame fixing, bolt with tapered and flat washer	M10x1.25	5.8
Gearbox mounting to frame fixing, bolt with tapered and flat washer	M8	2.8
Intermediate shaft mounting, self-locking nu	M8	2.5
Connecting rod to bodyshell support fixing, nut	M10X1.25	5
Connecting rod to engine support fixing, bolt	M10x1.25	5
Connecting rod support to bodyshell fixing, bolt with tapered and flat washer	M10x1.25	5.8
Track control arm rear bush to bodyshell fixing, bolt with tapered, flat unlosable washer	M12x1.25	11
Front and rear frame to bodyshell fixing, bolt with tapered, flat unlosable washer	M12x1.25	11
Shield under engine fixing, bolt	M8	1.5
	M6	0.55

PEDALS ASSEMBLY

Brake and clutch pedals to pedals assembly fixing, self-locking nut with polyamide seal for bolt	M10x1.25	6
Accelerator control lever hinge fixing, bolt	M6	0.5
Brake fluid reservoir bracket fixing, bolt	M6	0.55
Pedals assembly to bodyshell fixing, bolt	M8	1.4
Hydraulic clutch pump to pedals assembly fixing, self-locking nut	M8	1.6
Connector for rigid pipe on hydraulic clutch pump	M12x1	1.8
Connector for clutch pipe intermediate connection	M12x1	1.8

Copyright by Fiat Auto

00.

DESCRIPTION	Thread	Tightening torques daNm
Clutch pipe connection mounting bracket fixing, bolt	M6	0.6
Connector for clutch pipe on operating cylinder	M12x1	1.8
Bracket for clutch operating cylinder to gearbox fixing, bolt	M8	1.4
Clutch fluid reservoir fixing, bolt	M6	0.55
Accelerator cable adjustment, nut	M16x1	1.6
Idler mounting fixing, self-locking nut (right hand drive only)	M8	1.4
Shield for idler controls fixing, nut (right hand drive only)	M8	1.4
Shield for idler controls fixing, nut (right hand drive only)	M6	0.74
Accelerator shield fixing, bolt	M5	0.26

EXTERNAL GEARBOX CONTROLS

Reaction rod support to bracket on gearbox fixing, self-locking nut	M6	0.8
Gearbox control reaction rod fixing, nut	M8	1.5
Coupling to gearbox output rod fixing, bolt	M8	2.5
Gear engagement rod selector fork to gear lever fixing, self-locking nut	M6	0.45
Gear engagement lever joint to support fixing, bolt	M6	0.8
Flexible mounting fixing, bolt	M6	0.8
Reaction rod to engine bracket fixing, bolt with two diameters	M6	0.8
Sound insulating partition and seal fixing, self-locking nut with flange	M6	0.55
Gearbox control shaft to flexible mounting fixing, self-locking nut with flange for bolt	M8	2.5
Gearbox control rod to flexible mounting fixing, self-locking nut with flange	M8	2.5
Gearbox control shaft to flexible mounting fixing, bolt with flange	M8	2.5

DESCRIPTION	Thread	Tightening torques daNm
Reaction rod bracket to engine fixing, bolt	M8	1.8
Self-locking nut for automatic transmission	M8	2.5
Connector for automatic transmission flexible pipe	M8	1.5
Bolt for automatic transmission	M6	0.8
Nut for automatic transmission	M5	0.26

GEARBOX AND DIFFERENTIAL

Left side cover fixing, bolt	M8	2.5
Right side cover to casing fixing, bolt	M8	2.5
Gearbox casing to support fixing, bolt	M10x1.25	2.5
	M8	
Rear cover to gearbox casing fixing, bolt	M8	2.5
Gearbox oil threaded drain plug	M18x1.5 (tapered)	2.5
Gearbox casing oil threaded filler plug	M16x1.5 (tapered)	2.2
Differential casing to engine-gearbox support fixing, bolt	M8	2.5
	M10x1.25	5
Gearbox control rod spring retaining, bolt	M8	2.5
Magnetic plug	M22x1.5	4.6
Ring nut for securing main shaft gear	M22x1.5	17
Ring nut for securing layshaft gear	M22x1.5	17
Main shaft rear bearing retaining plate fixing, bolt	M8	2.5
Layshaft rear bearing retaining plate fixing, bolt	M8	2.5
1st and 2nd speed selector fork fixing, self-locking bolt	M8	2.5
3rd and 4th speed selector fixing, self-locking bolt	M8	2.5

Copyright by Fiat Auto

00.

DESCRIPTION	Thread	Tightening torques daNm
3rd and 4th speed selector fork fixing, self-locking bolt	M8	2.5
5th speed and reverse selector fixing, self-locking bolt	M8	2.5
Complete reverse gear lever fixing, bolt	M8	2.5
5th speed selector fork fixing, self-locking bolt	M8	2.5
Gearbox control lever on internal shaft fixing, self-locking nut	M8	2.5
External gearbox shaft control lever fixing, bolt	M8	2.5
Ring gear fixing, self-locking bolt	M10x1.25	9
Differential side constant velociy joint to flange fixing, bolt	M8	3.7
Ring nut fixing impulse generator	M18x1.5	5
Gearbox to engine fixing, flange with bolt (automatic transmission)	M10x1.25	3.5
Gearbox to engine lower fixing, nut with flange (automatic transmission)	M10x1.25	3.5
Gearbox to engine upper fixing, bolt with regular flange	M12x1.25	8
Gearbox to engine lower fixing, nut with flange (automatic transmission)	M12x1.25	5.5
Gearbox casing to engine mounting fixing, bolt (automatic transmission)	M10	4.3
Gearbox casing to engine mounting fixing, bolt (automatic transmission)	M10	4.3
Flywheel to torque converter fixing, bolt (automatic transmission)	M8	3.2
Flywheel to torque converter fixing, bolt (automatic transmission)	M10x1.25	5
Starter motor fixing, bolt (automatic transmission)	M8	1.8
Starter motor to gearbox casing mounting fixing, bolt (automatic transmission)	M8	2.1
Dust cover to gearbox casing support fixing, bolt (automatic transmission)	M6	0.57
Gear selector pin fixing, nut	M4	0.38

DESCRIPTION	Thread	Tightening torques daNm
Complete speedometer idler support to gearbox casing fixing, bolt	M6	0.4

BRAKES

Front brake disc fixing, bolt with centering pin	M10x1.25	2
Rear brake disc fixing, bolt with centering pin	M8	1.2
Front brake caliper to steering knuckle fixing, bolt with flange	M14x1.5	16
Rear brake caliper to stub axle fixing, bolt	M10x1.25	5.7
Connector for rigid pipe on brake servo pump	M10x1	1.4
Connector for securing rigid pipe to front and rear flexible pipes	M10x1	1.8
Connector for securing rigid pipes to load proportioning valve (for unit with cast iron casing)	M10x1 M12x1	1.4
Connector for securing flexible pipes to brake calipers	M10x1	1.8
Load proportioning valve to rear crossmember fixing, bolt	M6	0.8
Load proportioning valve bar control levers fixing, self-locking nut	M6	0.8
Bleed screw on front and rear brake calipers	M7	0.7
Handbrake lever to bodyshell fixing, bolt	M8	2.4
Rpm sensor for anti-lock brakes fixing, bolt	M6	1
Electro-hydraulic control unit for anti-lock brakes to bracket fixing, self-locking nut with polyammide seal	M6	0.6
Connector for rigid pipe on electro-hydraulic control unit for anti-lock brakes	M10 M12	1.4
Brake pipes fixing, nut with flange	M6	0.4
Brake servo to pedals assembly fixing, nut with polyammide seal	M8	1.4
Brake caliper shield fixing, bolt with unlosable washer	M6	0.5
Handbrake cable mounting bracket to bodyshell fixing, nut	M6	0.55

Copyright by Fiat Auto

00.

DESCRIPTION	Thread	Tightening torques daNm
Handbrake cable to bodyshell fixing, nut	M6	0.55
Handbrake bracket fixing, bolt	M10	5.5
Handbrake mounting fixing, bolt	M8	2.4

STEERING

Steering wheel mounting fixing, self-locking nut	M8	2
Steering shaft lower universal joint fork to steering box pinion fixing, bolt	M8	3
Steering wheel to steering column fixing, self-locking nut	M16x15	3
Steering wheel height adjustment device self-locking nut	M8	1
AIR-BAG module to steering wheel fixing, bolt	M6	0.65
Lower shaft shield to bodyshell fixing, bolt	M6	0.55
AIR-BAG sound insulation fixing, nut with flexible, tapered washer	M6	0.55
Flange securing bearing on steering column support fixing, bolt	M6	0.55
Passenger AIR-BAG to dashboard fixing, bolt with tapered washer	M6	0.7
Steering wheel adjustment device self-locking nut	M8	2

POWER ASSISTED STEERING

Power assisted steering box to frame fixing, bolt	M12x1.25	12
Power assisted steering box to frame fixing, bolt (2446 20v - 2959 V6)	M12x1.25	11
Power assisted steering box rod to steering knuckle fixing, self-locking nut	M10x1.25	3.8
Coupling to power assisted steering box rod fixing, nut	M14x1.5	5
Power assisted steering fluid reservoir bracket to bodyshell fixing, nut	M6	0.5
Power assisted steering box to rigid supply pipe fixing, nut	M8	1.5

DESCRIPTION	Thread	Tightening torques daNm
High pressure pipe closure bracket fixing, bolt	M6	0.5
Connector for fixing high pressure pipe to power assisted steering box	M16x1.5	3.6
Filler for fixing adjustable connector on power assisted steering pump (2446 20v - 2959 V6)	M18x1.5	3.4
Filler for fixing high pressure pipe to pump (2446 20v - 2959 V6)	M16x1.5	4
Shield to power assisted steering box fixing, bolt (2446 20v - 2959 V6)	M8	1.5
Power assisted steering fluid recovery pipe mounting bracket fixing, nut (2446 20v - 2959 V6)	M6	0.5
High pressure pipe mounting bracket fixing, bolt (versions with Servotronic)	M6	0.5
Filler for fixing adjustable connector for power assisted steering fluid (versions with Servotronic)	M14x1.5	3.4
Power assisted steering box rod to steering knuckle fixing, nut (2446 20v - 2959 V6)	M10x1.25	3.8
Rigid supply pipe to power assisted steering box fixing, nut (2446 20v - 2959 V6)	M8	1.5
Coupling to power assisted steering box rod fixing, nut (2446 20v - 2959 V6)	M14x1.5	5
Connector for fixing high pressure pipe to power assisted steering box (2446 20v - 2959 V6)	M16x1.5	3.6
Steering wheel to steering column fixing, nut (AIR-BAG)	M16x1.5	5
Steering wheel adjustment device nut	M8	1
Steering wheel mounting fixing, nut (AIR-BAG)	M8	2.8
Steering shaft lower universal joint fork to steering box pinion fixing, bolt	M8	3

FRONT SUSPENSION

Front wheel hub to stub axle fixing, nut	M24x1.5	6+52°
Front wheel to hub fixing, bolts	M12x1.25	9.8
Differential side coupling to flange fixing, bolt (1998 20v)	M8	4.2
Differential side coupling to flange fixing, bolt (2446 20v – 1995 16v – 2959 V6 – 2387 TD)	M10x1.25	5.5

00.

DESCRIPTION	Thread	Tightening torques daNm
Rear flexible bush to track control arm fixing, self-locking nut	M10x1.25	5
Track control arm rear flexible bush to frame fixing, bolt	M6	0.6
Shock absorber to steering knuckle (stub axle) fixing, nut	M12x1.25	10
Shock absorber to flexible mounting fixing, self-locking nut	M14x1.5	7
Ball joint to steering knuckle fixing, self-locking nut with flange	M12x1.25	5.5
Track control arm front bush to frame fixing, bolt with tapered, flat washer	M10x1.25	4.5
Shock absorber mounting to bodyshell fixing, bolt with tapered, flat washer	M8	2.8
Ball joint flange to track control arm fixing, nut	M10x1.25	4.5
Anti-roll bar U-bolt to chassis fixing, bolt with tapered, flat, unlosable washer	M8	2.8
Anti-roll bar connecting rod to track control arm fixing, self-locking nut	M10x1.25	4.5

REAR SUSPENSION

Rear wheel hubs to stub axle fixing, nut	M24x1.5	32
Rear wheel to hub fixing, bolts	M12x1.25	9.8
Shock absorber to steering knuckle (stub axle) fixing, nut	M12x1.25	9
Shock absorber to flexible mounting fixing, self-locking nut	M14x1.5	7
Shock absorber mounting to bodyshell fixing, self-locking nut	M8	2.5
Longitudinal rod for anti-roll bar to steering knuckle (stub axle) fixing, bolt	M12x1.25	10
Longitudinal rod support to bodyshell fixing, bolt with tapered, flat, unlosable washer	M10x1.25	6
Longitudinal rod to support fixing, nut	M10x1.25	6
Longitudinal rod to anti-roll bar fixing, bolt	M10x1.25	6
Crossmember to bodyshell fixing, bolt with tapered, flat unlosable washer	M10x1.25	6

DESCRIPTION	Thread	Tightening torques daNm
Transverse rods to crossmember and shock absorber fixing, self-locking nut	M12x1.25	9
Rear transverse rods adjustment hose securing, bolt	M8	1.5
Transverse rods fixing, nut	M12x1.25	9
INLET AND FUEL SYSTEM		
Plastic reservoir fixing, bolt	M8	1.2
Filler fixing, bolt	M6	0.5
Flow meter fixing, bolt	M6	0.5
Vacuum system bolt with tapered washer	M8	2.2
Connector for fixing pipes on fuel filter	M14x1.5	3.5
BODYWORK		
Bonnet lid stay, bolt with pin	M8	1.7
Bonnet lid hinges to bodyshell fixing, bolt	M8	2.7
Windscreen wiper arm fixing, nut	M10x1.25	1.5
Rear flap lock fixing, bolt	M6	0.8
Lock striker fixing, bolt	M8	2.5
Front pillar frame fixing, nut with flange	M8	1.6
Front headlamp holder upper crossmember fixing, bolt with flat washer	M8	2.5
Tow hook support fixing, bolt with flange	M6	2.4
Front wheel arch liner fixing, nut with flange	M8	1.6
Rear wing frame fixing, bolt	M8	1.8
Rear wing frame fixing, nut with flange	M8	1.6
Centre pillar fixing, bolt	M8	2.4

Copyright by Fiat Auto

00.

DESCRIPTION	Thread	Tightening torques daNm
Door hinges fixing, self-locking nut	M8	2
Dashboard and console fixing, nut	M8	2
Windscreen wiper fixing, bolt with flange	M8	2
Windscreen wiper fixing, nut with flange	M8	2
Front seat belt idler to regulator on door pillar fixing, bolt	7/16"	5
Front seat belt reel to pillar and side member fixing, bolt	7/16"	5
Seat belt buckle to front seat, inner side fixing, bolt	7/16"	5
Front seat belt regulator to door pillar fixing, bolt	M8	2.4
Rear centre seat belt buckle to floor fixing, bolt	7/16"	5
Rear side seat belt to floor fixing, bolt	7/16"	5
Front seat belt reel to upper partition fixing, bolt	7/16"	5
Lower rear seat backrest fixing, flanged bolt	M8	2.6
Seat backrest bracket fixing, bolt with flange	M6	0.8
Door lock fixing, bolt	M8	1.4
Carier fixing, nut	M6	0.55
Carier fixing, bolt	M6	2
Carier fixing, nut	M6	0.55
Internal crossmember to bodyshell fixing, bolt	M12	5.5
Carier fixing, bolt	M8	0.5
Carier fixing, bolt	M6	2
Earth on roof frame fixing, bolt with flange	M8	2.4

page

INTRODUCTION

- Performance - Fuel consumption 1

TECHNICAL DATA

ENGINES 1998 *20v* 2959 cc *24v*

- Cylinder block/crankcase, crankshaft and associated components 2
- Cylinder head assembly and valve gear components 3
- Cooling system - Fuel system 4
- Fuel system 5

GEARBOX AND DIFFERENTIAL 7

STEERING 8

WHEELS 9

REAR SUSPENSION 10

ELECTRICAL EQUIPMENT 11

- Electronic injection/ignition 12

Copyright by Fiat Auto

COPYRIGHT by Fiat Auto S.p.A.

Total or partial reproduction of the text or illustrations is forbidden.

The information in this publication is intended as a guide and could be superseded as a result of modifications adopted by the Manufacturer at any time due to technical and commercial reasons and in accordance with local regulations.

Fiat Auto S.p.A.

D.M.C. – M.D.S.
Servizi la Cliente – Post vendita
Largo Senatore G. Agnelli, 5 – 10040 Volvera – To – (Italia)
Print no. 506.475/25 – Marzo 1999 – 400
Printed by Satiz S.p.A. – Turin (Italy)
order n° *604.46.450*

ENGINE TYPE		1998 20v	2959 V6 24v
GEARBOX		1 3 5 / 2 4 R	1 3 5 / 2 4 R
Speed kph (average load) 	1	60 (○) 54 (●)	66
	2	101 (○) 92 (●)	104
	3	167 (○) 136 (●)	152
	4	212 (○) 178 (●)	200
	5	212	225
	R	64 (○) 58 (●)	66
Maximum climable gradient fully laden		37	
Fuel consumption directive 93/116/CE (litres/100 km) 	**Urban**	14,8	17,5
	Extra-urban	8,3	8,9
	Combined	10,7	12,1
CO_2 exhaust emissions (g/km)		255	288

(●) Power Drive Version
(○) Comfort Drive Version

The fuel consumption figures in accordance with directive 93/116/CE have been defined during homologation tests which involve:
- an urban cycle which includes a cold start followed by a varied urban cycle simulation.
- an extra-urban cycle which includes frequent acceleration in all gears simulating normal out of town usage. The speed varies between 0 and 120 kph.
- The combined average consumption includes 37% of the urban cycle and 63% of the extraurban cycle.

The type of journey, traffic conditions, driving styles, atmospheric conditions, trim level/equipment/accessories, whether a roof rack is fitted, the presence of special equipment and the general state of the vehicle can lead to fuel consumption figures which differ from those obtained through the above mentioned procedures.
The CO_2 exhaust emisssions (in g/km) are measured during the average combined cycle

Copyright by Fiat Auto

DESCRIPTION		1998 20v
		Values in mm
3	Gudgeon pin housing ⌀	1: 20,002÷20,007
		2:
3	Piston ring grooves	1: 1,22 ÷ 1,235
		2: 1,21 ÷ 1,23
		3: 2,01 ÷ 2,03
4	Gudgeon pin ⌀	1: 19,996 ÷ 20,000
		2:
	Gudgeon pin ⌀ LANCIA >	0,2
4-3	Gudgeon pin - Housing	0,002 ÷ 0,011
5	Piston rings L	1: 1,165 ÷ 1,18
		2: 1,17 ÷ 1,19
		3: 1,97 ÷ 1,99
	Piston rings ⌀ LANCIA >	0,4
5-1	Opening at end of piston rings in the cylinder liner	1: 0,200 ÷ 0,350
		2: 0,250 ÷ 0,500
		3: 0,250 ÷ 0,500
5-3	Piston rings Piston ring grooves	1: 0,04 ÷ 0,07
		2: 0,02 ÷ 0,06
		3: 0,02 ÷ 0,06

DESCRIPTION			1998 20v
			Values in mm
	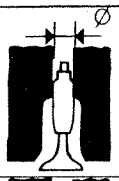 Valve guide bore in cylinder head	∅	12,950÷12,977
12 a	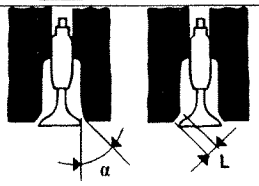 Valve seat	α →	45° ± 5′
		α ↷	45° ± 5′
		L	about 2
	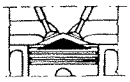 Volume of combustion chamber in cylinder head	cm^3	38,2
13	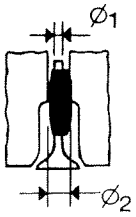 Valve guide	$∅_1$	7,022 ÷ 7,040
		$∅_2$ →	13,010 ÷ 13,030
		$∅_2$ LANCIA >	0,05 - 0,10 - 0,25
13-12 a	Valve guide Bore in cylinder head	→	0,033 ÷ 0,080
		↷	
14	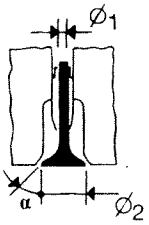 Valves	→ $∅_1$	6,975 ÷ 6,990
		→ $∅_2$	33,400 ÷ 33,700
		→ α	45° 30′ ± 5′
		↷ $∅_1$	6,960 ÷ 6,975
		↷ $∅_2$	27,900 ÷ 28,200
		↷ α	45°30′ ± 5′
15	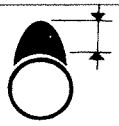 Cam lift	→	9
		↷	

Copyright by Fiat Auto

1998 20v

COOLING SYSTEM

Cooling circuit			coolant circulation via centrifugal pump, radiator and two speed electrical fan operated by thermostatic switch
Water pump operation			through belt
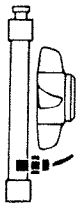 Thermal switch to engage fan		1st stage	90° ÷ 94°C
		2nd stage	
	stop	1st stage	85° ÷ 89°C
		2nd stage	
Engine coolant thermostat		opening	81° ÷ 85°C
		max opening	99° ÷ 103°C
		valve travel	9,5 mm
Fitting clearance between impeller vanes and pump casing 			–
Pressure for checking sys. water tightness			0,98 bar
Pressure for checking exhaust valve in expansion tank cap			0,98 bar

FUEL SYSTEM

Type	Bosch Motronic M3.1 integrated electronic injection/ignition
Pump	electrical
Capacity	⩾ 120 l/h
Fuel pressure regulator setting	3,5 bar

Checking idle concentration of pollutant emissions	CO (%)	HC (p.p.m)	CO_2 (%)
Upstream of the catalytic converter	0,4 ÷ 1	⩽ 600	⩾ 12
Downstream of the catalytic converter	⩽ 0,35	⩽ 90	⩾ 13

BOSCH INTEGRATED INJECTION/IGNITION SYSTEM COMPONENTS FOR 1998 20v ENGINE TYPES

	1998 20v
Injection/ignition system electronic control unit	0.261.206.069
Butterfly casing	0.205.003.052
Injector	0.280.155.770
Electric fuel pump	0.580.313.020
Air flow meter	0.280.217.108
Coolant temperature sensor	269 0350 402 183 01
Lambda sensor	0.258.006.072 0.258.006.193
Fuel vapour solenoid valve	0.280.142.340
Detonation sensor	0.261.231.131
Injection timing sensor	0.232.101.036
TDC and rpm sensor	0.260.210.160
Potentiometer on accelerator pedal	0.281.002.202

Copyright by Fiat Auto

BOSCH MOTRONIC ME2.1 INTEGRATED INJECTION/IGNITION SYSTEM COMPONENTS

	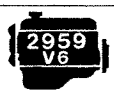 24v
Injection/ignition system electronic control unit	0.261.206.167
Butterfly casing	0.280.750.701
Injector	0.280.150.450
Electric fuel pump	0.580.313.080
Air flow meter	0.280.217.531
Coolant temperature sensor	2690350 402 183 01
Electric fuel pump relay feed	465 204 12
Injection/ignition control unit relay feed	465 204 12
Lambda sensor	0.258.006.021 0.258.006.190
TDC and rpm sensor	0.261.210.163
Fuel vapour solenoid valve	0.280.142.300
Injection timing sensor	0.232.103.009
Detonation sensor	0.261.231.095 0.261.231.007
Potentiometer on accelerator pedal	0.280.752.005

AISIN AUTOMATIC TRANSMISSION

	ENGINE TYPE	1998 20v
Gears		❶❷❸❹Ⓡ
Gear ratios	❶	3,606:1
	❷	2,060:1
	❸	1,366:1
	❹	0,982:1
	Ⓡ	3,949:1
Idler ratio		56/57 (0,982)
Torque converter	∅ mm	241
Ratio (multiplication) for drive torque		1,99
Quantity of oil GI/2●	1st filling	7,5 l (6,8 Kg)
	periodic replacement	3 l (2,7 Kg)

(●) "DEXRON II" type oil for automatic transmissions

DIFFERENTIAL

Ratio crown wheel and pinion reduction		69/26 (2,654)
Ratio at the wheels	❶	9,570:1
	❷	5,467:1
	❸	3,625:1
	❹	2,606:1
	Ⓡ	10,480:1

Copyright by Fiat Auto

Type	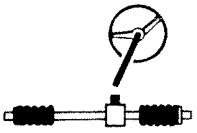 rack and pinion power asssited	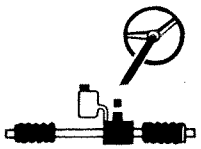 electronically controlled rack (servotronic)
 Ratio —  no. of turns lock to lock	3	
 rack travel	153 mm (144,5 mm)*	
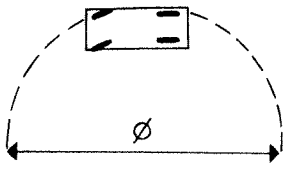 Turning circle	10,90 m	12,20 m
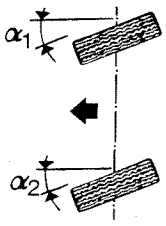 Steering angle — outer wheel α_1	32° 29' - 28° 44' (*)	
inner wheel α_2	36° 57' - 31° 47' (*)	
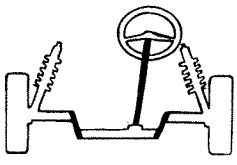 Steering column	 with 2 universal joints	

* For version with automatic transmission

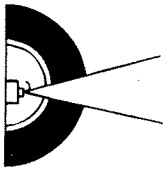



unladen car (*)

WHEEL GEOMETRY

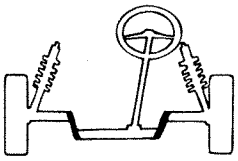 Front suspension	camber (*)	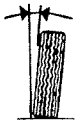	-0° 35′ ÷ -1° 15′
	caster (*)		2° 50′ ÷ 3° 30′
	toe in	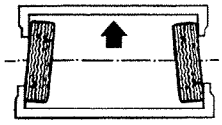	0 ÷ 2 mm
	front wheel offset ▲		0°
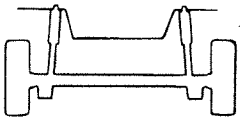 Rear suspension	camber (*)	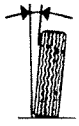	-0° 25′ ÷ -1° 5′
	caster (*)		–
	toe in	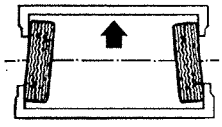	1,5 ÷3,5 mm
	rear wheel thrust angle ▲		0°

(*) Angles cannot be adjusted
(▲) Angular values which cannot be adjusted, used for the correct alignment of the vehicle

Copyright by Fiat Auto

Rear suspension independent. Longitudinal and transverse rods, telescopic dampers incorporated with the double acting, hydraulic shock absorbers, coil springs and anti-roll bar.

Coil springs

			2959 V6 24v
			COUPÈ
Diameter of wire		mm	12,55 ÷ 12,65
Number of turns			4,23
Direction of coil			clockwise
Height of spring released		mm	361
Height of spring under a load of:	268 ±10 dN	mm	195
The springs are subdivided into two categories, identifiable by a mark			
yellow (1) for those under a load of:	268 dN	height of mm	> 195
green (1) for those under a load of:	268 dN	height of mm	⩽ 195

(1) Springs of the same category must be fitted.

Shock absorbers

Type		hydraulic telescopic, double acting
Open (start of damping action)	mm	724
Closed (metal against metal)	mm	532,2
Travel	mm	191,8

	1998 20v	2959 V6 24v
STARTER MOTOR	M.Marelli E 70R-12V-1,4 kW (with reduction gear)	Bosch ⌀ 74,5-12V-1,4KW (with reduction gear)
ALTERNATOR	M.Marelli A 127I-14V-55/100A Bosch NC-14V-60/120A (*)	Bosch NC-14V-60/120A
VOLTAGE REGULATOR	BUILT IN ELECTRONIC	
BATTERY	12V - 60Ah - 320A	
IGNITION SYSTEM	Bosch Motronic M3.1 integrated electronic injection/ignition	Bosch Motronic M2.1 integrated electronic injection/ignition
IGNITION COIL	0.221.504.014 (1 per spark plug)	Bosch 0.221.504.456 (1 per spark plug)
POWER MODULE	–	–
SPARK PLUGS	LANCIA 7G BM SR Champion RC8BYC	NGK PFR6B

(*) For vehicles equipped with air conditioning

Copyright by Fiat Auto

CONTROL MODULE BOSCH MOTRONIC INEGRATED ELECTRONIC INJECTION/IGNITION

	1998 20v	2959 V6 24v
Make Bosch	0.261.206.069	0.261.206.167
Firing order	1 - 4 - 2 - 5 - 3 - 6	

IGNITION COIL (1 PER SPARK PLUG)

Make	Bosch	
Type	0.221.504.014	0.221.504.456
Ohmic resistance of primary winding at 20 °C Ω	0,73	
Ohmic resistance of secondary winding at 20 °C Ω	9600	

T.D.C. SENSOR

Make Bosch		0.261.210.119	0.261.210.104
Sensor winding resistance at 20 °C	Ω	774 ÷ 946	–
Distance (gap) between sensor and crankshaft pulley tooth	mm	0,8 ÷ 1,5	–
Distance (gap) between sensor and engine flywheel tooth	mm	–	0,8 ÷ 1,5

DETONATION SENSOR

Make Bosch	0.261.231.007	0.261.231.095 0.261.231.007

CYLINDER RECOGNITION AND TIMING SENSOR

Make and type	–	Bosch 0.232.103.009

ADVANCE ON ENGINE

With engine idling (700±50 rpm)	–

SPARK PLUGS

Make and type		Champion RC8BYC	NGK PFR 6B
Thread		M 14 x 1,25	
Electrode gap	mm	0,8 ÷ 1	0,6 ÷ 0,7

BOSCH MOTRONIC M 2.10.4 M.P.I. INTEGRATED INJECTION/IGNITION SYSTEM 1
- Introduction 1
- General description of the injection system 1
- General description of the ignition system 1
- Injection/ignition system functional diagram 2
- Functions of the system 3

SYSTEM MANAGEMENT STRATEGIES 4
- Adjustment of the injection times 4
- Adjustment of the ignition advances 4
- Controlling cold starting 4
- Controlling enrichment during acceleration 4
- Fuel cut off during overrun 4
- Controlling engine idle speed management 5
- Restriction of the maximum engine speed (protection outside of revs) 5
- Controlling combustion through the Lambda sensor 5
- Fuel vapour recovery 6
- Control of the detonation 6
- Control of the phase transformer 6
- Self-adjustment of the system 6
- Autodiagnosis 6
- Connection with engine immobilizer device (Lancia CODE) 7
- Management of the climate control system 7
- Management of the radiator fan 7

Diagram showing information entering/leaving the control unit and sensors/actuators 8
Diagram showing fuel supply circuit 9
Diagram showing air intake circuit 10
Diagram showing anti-evaporation circuit 11
System for recirculating gases coming from the engine crankcase 12
Engine exhaust assembly diagram 13
Injection/ignition system wiring diagram 14
Connection between control unit/ignition coils and injectors 15

INJECTION/IGNITION SYSTEM COMPONENTS 16
- Injection/ignition system wiring diagram 16
- Injection/ignition electronic control unit 16
- Ignition coils 18
- Rpm and TDC sensor 20
- Detonation sensors 21
- Timing sensor 22
- Electric fuel pump 23
- Fuel supply manifold and pressure regulator 24
- Injectors 25
- Fuel filter 26
- Butterfly casing 26
- Butterfly valve position sensor 27
- Engine idle speed actuator 28
- Air temperature sensor 29
- Flow meter 29
- Atmospheric pressure sensor 31
- Supercharging pressure solenoid valve 31
- Phase transformer 34
- Coolant temperature sensor 36
- Inertia switch 37
- Lambda sensor 38
- Active charcoal filter 40
- Fuel vapour cut out solenoid valve 41
- Removing-refitting active charcoal filter and fuel vapour solenoid valve 41
- Safety and ventilation valve 42
- Fuel vapour separator 42
- Multi-purpose valve 43
- Fuel vapour recirculation pneumatic valve 44
- Air/air heat exchanger (intercooler) 44
- Mechanical by-pass valve 45
- Turbocharger 45

CHECKS, ADJUSTMENTS AND REPAIR OPERATIONS ON THE BOSCH MOTRONIC M 2.10.4 INJECTION/IGNITION SYSTEM IN ADDITION TO THE FAULT DIAGNOSIS 46
- Removing-refitting fuel filter 46
- Removing-refitting electric fuel pump 47
- Removing-refitting fuel manifold complete with injectors and pressure regulator 48
- Checks on the fuel supply circuit 49
- Check on fuel consumption using flowtronic equipment 51
- Controlling the engine idle speed 52
- Checking concentration of pollutant emissions 52

DIAGNOSTICS 54

Copyright by Fiat Auto

COPYRIGHT by Fiat Auto S.p.A.

Total or partial reproduction of the text or illustrations is forbidden.

The information in this publication is intended as a guide and could be superseded as a result of modifications adopted by the Manufacturer at any time due to technical and commercial reasons and in accordance with local regulations.

Fiat Auto S.p.A.

D.M.C. – M.D.S.
Servizi la Cliente – Post vendita
Largo Senatore G. Agnelli, 5 – 10040 Volvera – To – (Italia)
Print no. 506.475/25 – Marzo 1999 – 400
Printed by Satiz S.p.A. – Turin (Italy)
order n° *604.46.450*

BOSCH MOTRONIC M 2.10.4 M.P.I. INTEGRATED INJECTION/IGNITION SYSTEM 1
- Introduction 1
- General description of the injection system 1
- General description of the ignition system 1
- Diagram showing the operation of the injection/ignition system 2
- Functions of the system 3

SYSTEM MANAGEMENT STRATEGIES 4
- Adjustment of the injection times 4
- Adjustment of the ignition advance 4
- Controlling cold starting 4
- Controlling enrichment during acceleration 4
- Fuel cut-off 4
- Controlling engine idle speed management 5
- Limiting the maximum number of revs 5
- Controlling combustion through the Lambda sensor 5
- Fuel vapour recovery 6
- Controlling detonation 6
- Controlling the phase transformer 6
- Self-adjustment of the system 6
- Autodiagnosis 6
- Connection with engine immobilizer device (Lancia CODE) 7
- Management of the climate control system 7
- Management of the radiator fan 7

Diagram showing information arriving at-/leaving the control unit and sensors/actuators 8

Diagram showing fuel supply circuit 9

Diagram showing the air intake circuit 10

Diagram showing the anti-evaporation circuit 11

System for recirculating gases coming from the engine crankcase 12

Engine exhaust assembly diagram 13

Injection/ignition system wiring diagram 14

Connection between control unit/ignition coils and injectors 15

INJECTION/IGNITION SYSTEM COMPONENTS 16
- Injection/ignition system wiring 16
- Injection/ignition electronic control unit 16
- Ignition coils 18
- Rpm and TDC sensor 20
- Detonation sensors 21
- Timing sensor 22
- Electric fuel pump 23
- Fuel supply manifold and pressure regulator 24
- Injectors 25
- Fuel filter 26
- Butterfly casing 26
- Butterfly valve position sensor 27
- Engine idle speed actuator 28
- Air temperature sensor 29
- Flow meter 29
- Atmospheric pressure sensor 31
- Supercharging pressure solenoid valve 31
- Speedometer sensor 33
- Phase transformer 34
- Coolant temperature sensor 36
- Inertia switch 37
- Lambda sensor 38
- Active charcoal filter 40
- Fuel vapour cut out solenoid valve 41
- Removing-refitting active charcoal filter and fuel vapour solenoid valve 41
- Ventilation and safety valve 42
- Fuel vapour separator 42
- Multi-purpose valve 43
- Fuel vapour recirculation pneumatic valve 44
- Air-air heat exchanger (intercooler) 44
- Mechanical by-pass valve 45
- Turbocharger 45

CHECKS-ADJUSTMENT AND REPAIR OPERATIONS TO THE BOSCH MOTRONIC M 2.10.4 INJECTION/IGNITION SYSTEM IN ADDITION TO THE FAULT DIGANOSIS 46
- Removing-refitting fuel filter 46
- Removing-refitting electric fuel pump 47
- Removing-refitting fuel manifold complete with injectors and pressure regulator 48
- Checks on the fuel supply circuit 49
- Checking fuel consumption using flowtronic equipment 51
- Checking the engine idle speed 52
- Checking concentration of pollutant emissions 52

DIAGNOSIS 54

Copyright by Fiat Auto

COPYRIGHT FIAT AUTO

The reproduction, even partial, of the text and illustrations is prohibited.

The information contained in this publication is purely indicative and could be out of date following modifications made by the Manufacturer, at any time, for technical or commercial reasons or in order to conform to legal requirements in the various countries.

Fiat Auto S.p.A.
D.M.C. - M.P.S.
Servizi Post Vendita - Tecnologie Assistenziali
Largo Senatore G.Agnelli, 5 - 10040 Volvera - To (Italia)
Publication no. 506.475/23 - Maggio 1998 - 400
Printed by Satiz S.p.A. - Turin (Italy)
order no. 60445996

BOSCH MOTRONIC M 2.10 M.P.I. INTEGRATED INJECTION/IGNITION SYSTEM

Introduction

The Bosch Motronic system fitted on the 1998 5 cylinder 20 valve turbo engine belongs to the category of static advance, inductive discharge, digital electronic ignition systems integrated with phased, sequential type electronic fuel injection systems.
This system has a single electronic control unit, one set of wiring and one joint set of sensors.
Its function is to inject the exact quantity of petrol into the inlet manifold, upstream of the inlet valves, designed to mix with the air introduced into the cylinder to produce the correct mixture strength.

The Motronic M 2.10.4 system guarantees efficient operation making it possible to achieve optimum performance and consumption and reduce harmful exhaust emissions through a prompt response to the different engine operating conditions.

General description of the injection system

There are basically two essential conditions which must always be satisfied in the preparation of the air/fuel mixture for the smooth running of ignition engines:

1. the metering (air/fuel ratio) should be kept as constant as possible and close to the stoichiometric value to ensure sufficiently rapid combustion and avoid unnecessary fuel consumption;
2. the mixture should be composed of petrol vapours dispersed as finely and evenly as possible in the air.

In the Bosch Motronic M 2.10.4 system the injector nozzles perform the task of atomizing the petrol into the most minute droplets.
Since the air introduced may find itself in absolute pressure conditions, the quantity of petrol to be injected must be varied so that the weight ratio between the air and the petrol is not altered.
The above ratio is kept constant by altering the value of the fuel supply pressure, by means of a regulator, according to the vacuum of the air in the inlet manifold, so that the difference between the two pressures is constant for all engine operating conditions.

As far as the optimum metering, on the other hand, is concerned, it is calculated according to the following measurements:

- exact quantity of intake air through the flow meter;
- engine rotation speed through the rpm sensor;
- acceleration required through the butterfly valve position sensor;
- engine coolant temperature through the sensor on the thermostat mounting;
- measuring the oxygen content of the exhaust gases through the Lambda sensor.

This information is processed by a micro-calculator in the injection/ignition electronic control unit which determines the basic injection time through these experimentally obtained values which are stored in a special memory in the above mentioned control unit.

General description of the ignition system

The ignition system is the static advance, inductive discharge type (i.e. there is no high tension distributor) with power modules inside the electronic control unit.
There is a single coil in the system for each spark plug; the advantages of this solution are:

- less electrical overloading
- guarantee of constant discharge at each spark plug

The electronic control unit contains a memory in which the entire series of optimum advance values which the engine can adopt throughout its operating range according to the engine speed and load conditions is stored.

Copyright by Fiat Auto

INJECTION/IGNITION SYSTEM FUNCTIONAL DIAGRAM

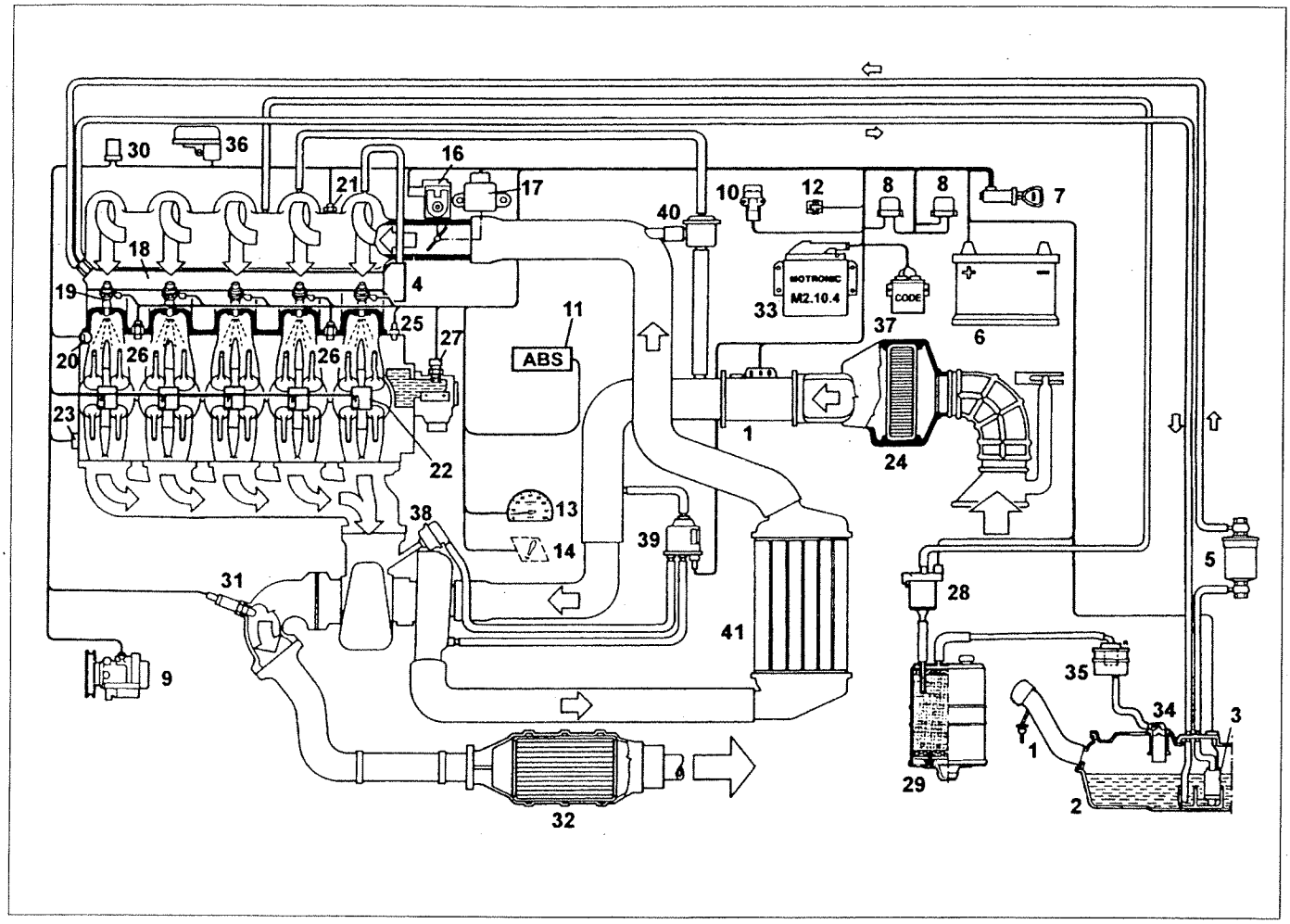

P3U02EW01

1. Safety valve
2. Fuel tank
3. Electric fuel pump
4. Fuel pressure regulator
5. Fuel filter
6. Battery
7. Ignition switch
8. System relay feeds
9. Climate control compressor
10. Inertia switch
11. ABS control unit (vehicle speed signal)
12. Diagnostic socket
13. Rev counter
14. Infocenter system failure indication
15. Air flow meter
16. Engine idle speed actuator
17. Butterfly valve position sensor
18. Fuel manifold
19. Injectors
20. Phase transformer solenoid valve
21. Intake air temperature sensor
22. Ignition coils
23. Engine timing sensor
24. Air filter
25. Engine rpm sensor
26. Detonation sensors
27. Coolant temperature sensor
28. Fuel vapour solenoid valve
29. Charcoal filter
30. Phase transformer solenoid valve relay
31. Lambda sensor
32. Catalytic silencer
33. Injection/ignition control unit
34. Multi-purpose valve
35. Fuel vapour separator
36. Atmospheric pressure sensor
37. Lancia CODE control unit
38. Waste gate valve
39. Pierburg solenoid valve
40. By-pass valve
41. Intercooler

These values have been obtained experimentally, by means of a long series of practical tests carried out on prototypes at the engine test bench to identify the advances which allow the best compromise between the conflicting demands of maximum power and minimum consumption and harmful exhaust emissions.
The optimum advances have then been memorized in the system control unit. During the operation of the engine, the control unit is constantly informed of the engine speed and load conditions and, on this basis, it "selects" the necessary advance value from its memory for the spark at the spark plug in the cylinder in the explosion stroke with the optimum advance.

In addition, the control unit corrects this value depending on other factors such as the engine coolant temperature, intake air temperature, detonation and butterfly valve position, so that the ignition is always optimum.

The information required by the control unit to operate the single coils is transmitted by means of electrical signals produced by the following sensors:

a. **An rpm sensor** which produces a single phase alternating signal whose frequency indicates the engine speed.

b. **An air flow meter** which, on the basis of the quantity of air drawn in by the engine, transforms this value into an electrical signal, sending it to the electronic control unit.

c. **An air temperature sensor** which transforms the value of the intake air temperature into an electrical signal, sending it to the electronic control unit.

d. **Two detonation sensors** which, located on the upper part of the cylinder block/crankcase, one between cylinders 1 and 2 and other between cylinders 4 and 5, allow the control unit to recognize the cylinder where detonation is taking place (or is about to) and correct the ignition advance for the spark plug for the cylinder involved only.

e. **A butterfly valve position sensor** which transforms the angular value of the butterfly into an electrical signal allowing the control unit to recognize the minimum, partial or full load conditions.

Functions of the system

In addition to electronically controlling the moment of ignition and the air flow rate during idling, in order to allow the smooth operation of the engine as the environmental parameters and the load conditions vary, the control unit must also control and manage the injection so that the stoichiometric ratio (air/fuel) is always within the optimum value.
The electronic control unit establishes the operating «time» for the injectors using a simple rule which can be summed up as follows.

Taking the physical properties of the fuel (viscosity and density) as constant and the difference in pressure between the pressure of the fuel and the pressure in the inlet manifolds, the quantity of fuel to be injected only depends on the injector «opening time».
The injection/ignition system basically carries out the following functions:

- adjusting the injection times;
- adjusting ignition advances;
- controlling cold starting;
- controlling enrichment during acceleration;
- fuel cut-off;
- controlling and managing the engine idle speed;
- limiting the maximum number of revs;
- controlling combustion via the Lambda sensor;
- fuel vapour recovery;
- controlling detonation;
- controlling the phase transformer;
- self-adjustment of the system;
- connection with the engine immobilizer device (Lancia CODE);
- autodiagnosis;
- management of the climate control system;
- management of the radiator fans.

Copyright by Fiat Auto

SYSTEM MANAGEMENT STRATEGIES

Adjustment of the injection times

Digital technology has made it possible to ensure optimum fuel economy and performance using maps stored inside the electronic control unit memory of the engine speed and load conditions.
The control unit operates the injectors with great speed and precision, calculating the opening time on the basis of the engine load (number of revs and air flow rate) also taking into account the battery voltage and the temperature ofthe engine coolant.
The injection is sequential and timed for each cylinder (the moment of injection is not simultaneous for all cylinders) and takes place at the optimum injection point.

Adjustment of ignition advance

Thanks to a map stored in its memory, the control unit is capable of calculating the advance according to the engine load (minimum, partial, full on the basis of the engine speed and air flow rate), the temperature of the intake air and the temperature of the engine coolant.
It is possible to selectively delay the ignition at the necessary cylinder which is recognized from the combination of the values recorded by the detonation and cam angle sensors.

Controlling cold starting

Under these circumstances there is a natural weakening of the mixture as a result of the poor turbulence of the particles of fuel at low temperatures and reduced evaporation and condensation on the internal walls of the inlet manifold, all of which is exacerbated by the increased viscosity of the lubricating oil.

The electronic control unit recognizes this condition and corrects the injection time on the basis of the signal for the coolant temperature, the intake air temperature, the batatery voltage and the engine speed.

The ignition advance depends entirely on the number of revs and the temperature of the engine coolant.

During starting the control unit controls an initial simultaneous injection for all the injectors (full group injection) and after recognizing the reference on the flywhell it switches to the normal sequential timed operation.

Whilst the engine is warming up, the electronic control unit controls the idle speed actuator which determines the quantity of air needed to guarantee that the engine does not cut out.

The rotation speed decreases proportionally as the temperature increases until the nominal value is reached when the engine reaches operating temperature.

Controlling enrichment during acceleration

When there is an acceleration request, if the variation in the air flow meter signal exceeds a pre-set increase, the control unit not only adjusts the injection to the new requirements, but it also further increases it to reach the required speed more quickly.

As the pre-set number of revs is approached, the increase in injection is gradually eliminated.

NOTE *The acceleration request is also determined by the potentiometer on the butterfly; it makes it possible to ensure optimum driving if the air flow meter fails until a Service Centre is reached.*

Fuel cut off

The fuel cut off is the adjusted type.

When the closed butterfly condition is recognized and the engine speed exceeds 1700 rpm (the cut off is not operational below speeds of 1700 rpm to maintain optimum driveability) the fuel injection is deactivated.

With no fuel supply, the number of revs starts to decrease more or less quickly depending on the vehicle driving conditions.

Before the idle speed is reached, the dymanics of the decrease in revs is checked.

If it is above a certain value, the fuel supply is partly restored on the basis of a special logic involving the engine idle speed.

When this condition is reached, all normal idle functions are restored and the cut off is only reactivated when the fuel cut off threshold is reached to avoid the irregular operation of the engine. The levels for reinstating the fuel supply and the fuel cut off vary according to the engine temperature.

The control unit contains another fuel cut off logic which intervenes in partial decelaration conditions, i.e. when the engine load conditions requested are lower.

This function is only activated if the new condition persists for a pre-set time and after the ignition advance angle has adjusted to the new situation.

Controlling engine idle speed management

The adjustment of the idle speed is carried out in all operating conditions by means of an idle speed actuator which acts on the butterfly by-pass valve.

In addition to controlling the actual idle speed, it also carries out the functions of a supplementary air valve for switching on the various consumers (e.g. the climate control compressor); with the butterfly in the end of travel position, the actuator regulates the opening of the by-pass compensating for the power required by the consumers in order to ensure an idle speed of 750 rpm.

The actuator on this version guarantees prompt adjustments because the opening and closing of the by-pass are both controlled by magnetic windings.

The correction of the idle is not only carried out by the actuator, but also by the adjustment of the ignition angle (advance) because the effect of the latter is quicker.

NOTE *The auto-adjustment function makes it possible to eliminate all adjustments of the idle speed with the butterfly sensor recognizing the "butterfly in the end of travel position" and thereby also correcting any possible wear which may occur in time and be recognized from the butterfly closing position.*

Limiting the maximum number of revs

When the engine speed exceeds 6800 rpm, the electronic control unit reduces the injector operating times so that the figure is not exceeded.

If the engine speed exceeds 7013 rpm, the control unit activates the fuel cut off strategy, restoring the operation of the injectors when the speed returns to below 6800 rpm.

Controlling combustion through the Lambda sensor

The Lambda sensor informs the control unit of the quantity of oxygen present at the exhaust and consequently the correct air/fuel metering.

The optimum mixture occurs when the Lambda coefficient = 1 (optimum stoichiometric mixture). The electrical signal which the sensor sends to the control unit undergoes sharp variations when the composition of the mixture diverges from Lambda = 1. When the mixture is "poor" ($\lambda > 1$) the control unit increases the quantity of fuel, when the mixture is "rich" ($\lambda < 1$) it decreases it: in this way the engine operates as close as possible to the ideal Lambda value.

The Lambda sensor signal is processed, inside the control unit, by a special integrator which prevents sharp variations in the injection times to correct the mixture strength.

The sensor is heated by an electrical resistance in order to reach the correct operating temperature rapidly (about 300 °C).

It is possible, through this sensor, to precisely regulate the engine carburation. This allows, amongst other things, corresponding operation within the regulations governing emissions.

Copyright by Fiat Auto

Fuel vapour recovery

The fuel vapours (pollutant in terms of legislation) are sent to an active charcoal filter and from there to the engine where they are burnt; this takes place by means of a solenoid valve which is only operated by the control unit when the engine load conditions allow correct combustion without the operation of the engine being "disturbed": in effect, the control unit compensates for the quantity of petrol entering with a reduction in the supply to the injectors.

Controlling detonation

This function has the task of detecting the presence of detonation (engine knock) by processing the signal coming from the appropriate sensors. The control unit constantly compares the signals coming from the sensors which a limit value which, in turn, is constantly updated, to take into account basic noise and the ageing of the engine.

The control unit is therefore capable of detecting the presence of detonation (or the onset of detonation) and reduces the ignition advance (from 3° to a maximum of 9.7°), until the phenomenon disappears. Afterwards, the advance is gradually restored to the basic value.

In acceleration conditions, a higher level is used, to take into account the increased noise of the engine under these circumstances. The detonation control strategy is also equipped with an auto-adjustment function which memorizes the reductions in the advance which should be continuously repeated to adjust the map to the different conditions which the engine finds itself in.

Controlling the phase transformer

The control unit controls the phase transformer solenoid valve according to the engine load conditions. When the temperature of the coolant exceeds 40 °C and when the engine speed is above idling and below 4800 rpm with the butterfly angle greater than around 8°, the control unit sends a signal to the solenoid valve which, when activated, allows the transformer to decrease the timing diagram in the inlet stage by 18°.

When the engine is idling or the speed exceeds 4800 rpm, the control unit deactivates the solenoid valve and the transformer restores the inlet timing to the former basic values.

Obviously there is a hysteresis field for the operation of the phase transformer, i.e. the activation level for the solenoid valve is always higher than the deactivation level; this is designed to avoid balancing conditions and too rapid a succession of shifts from one timing diagram to another with obvious operating problems.

Self-adjustment of the system

The control unit has an auto-adjustment function which has the task of recognizing the changes which take place in the engine due to the processes of bedding in over a period of time and the ageing of both the components and the engine itself.

These changes are memorized in the form of modifications to the basic mpa and have the task of adjusting the operation of the system to the gradual alterations to the engine and components compared with when they are new.

This adjustment function also makes it possible to compensate for the inevitable differences (due to production tolerances) in components which are replaced. This means that optimum results are possible for all vehicles without special adjustment and checking operations.

The self-adjustment parameters are lost if the control unit is disconnected.

Autodiagnosis

The M 2.10.4 injection/ignition system M 2.10.4 is also equipped with an "**autodiagnosic**" function which memorizes any faults with the sensors and actuators, making their identification and correction easier. A possible fault is signalled by the appropriate warning light in the instrument panel.

Connection with engine immobilizer device (Lancia CODE)

To improve protection against theft attempts, the vehicle has been equipped with an engine immobilizer device (Lancia CODE) which only allows the activation of the injection/ignition control unit through an electronic code.
Each time the key is turned to the OFF position, the Lancia CODE system completely deactivates the injection/ignition control unit.
When the ignition key is turned from OFF to ON, the following operations take place in order:

1. The injection/ignition control unit sends the Lancia CODE control unit a request for the secret code in order to deactivate the immobilizer function.
2. The Lancia CODE control unit responds by only sending the secret code after having, in turn, received the recognition code transmitted by the ignition key which contains a special transponder.
3. The recognition of the secret code allows the de-activation of the immobilizer function and the injection/ignition control unit can activate the normal system management programme.

A special two-way serial line allows the exchange of data between the injection/ignition control unit and the Lancia CODE control unit.
If there is a failure with the Lancia CODE system the vehicle can be started using the emergency procedures.



Given the presence of the Lancia CODE system **DO NOT**, *during the fault diagnosis and/or functional checks, carry out any tests using another injection/ignition control unit. In such a case the Lancia CODE control unit would transfer the (unrecognized) code to the test control unit which could then no longer be used on any other vehicles.*

Management of the climate control system

The injection/ignition control unit is functionally connected to the climate control system, in that:

1. it receives the request to switch on the compressor from the climate control unit via pin 41 and operates the appropriate interventions (additional air);
2. it gives the go ahead to switch on the compressor via pin 32, when the conditions for the following strategies are verified;
3. it receives information on the status of the three stage pressure switch from pins 40 and 44 and operates the appropriate interventions (operation of radiator fan).

As far as point 1 is concerned, if the engine is not idling, the control unit increases the flow rate of the air from the idle actuator before the compressor is switched on and, conversely, it returns the actuator to its normal position after the compressor is switched off.

On the other hand, as far as point 2 is concerned, the control unit automatically controls the switching off of the compressor:

- for several seconds (timed switching off):
  - in high engine power requirement conditions (fierce acceleration);
  - during engine take off;
- as long as the following critical conditions persist:
  - at engine coolant temperatures above 115°C;
  - at engine speeds below 750 rpm.

Management of the radiator fans

The control unit directly controls the operation of the radiator fans according to the temperature of the engine coolant and the engagement of the climate control system.
The fans come on when the temperature exceeds 98°C (1st speed) and 101°C (2nd speed). The fans switch off with a hysteresis of 2°C below the temperature level.
The high or low speed functions are managed by the intervention of specific relays in the climate control system control unit operated by the control unit.

Copyright by Fiat Auto

DIAGRAM SHOWING INFORMATION ENTERING/LEAVING THE INJECTION/IGNITION CONTROL UNIT AND SENSORS/ACTUATORS

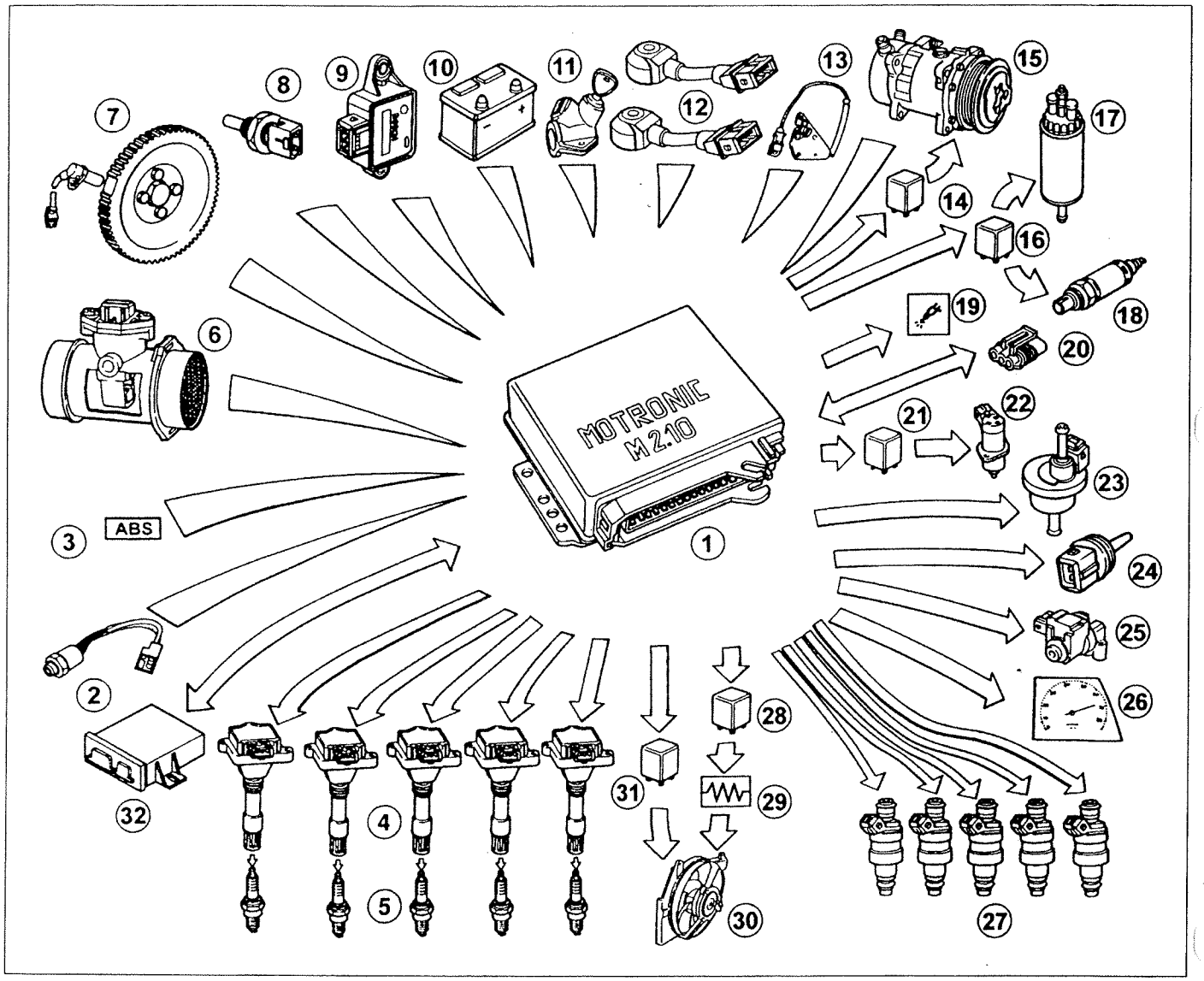

P3U08EW01

1. Electronic control unit
2. Three stage pressure switch
3. Vehicle speed signal (from ABS control unit)
4. Atmospheric pressure sensor
5. Supercharging pressure solenoid valve
6. Flow meter
7. Rpm sensor
8. Coolant temperature sensor
9. Butterfly potentiometer
10. Battery
11. Ignition switch
12. Detonation sensors
13. Timing sensor
14. Air conditioning compressor relay
15. Climate control system signal
16. Electric fuel pump and Lambda sensor relay
17. Electric fuel pump
18. Lambda sensor
19. Infocenter system failure indication
20. Diagnostic socket
21. Relay for phase transformer
22. Phase transformer solenoid valve
23. Fuel vapour solenoid valve
24. Intake air temperature sensor
25. Engine idle speed actuator
26. Rev counter signal
27. Injectors
28. Fan 1st speed relay
29. Fan 1st speed resistance
30. Electric fans
31. Fan 2nd speed relay
32. Coils
33. Spark plugs
34. Lancia CODE control unit

DIAGRAM SHOWING FUEL SUPPLY CIRCUIT

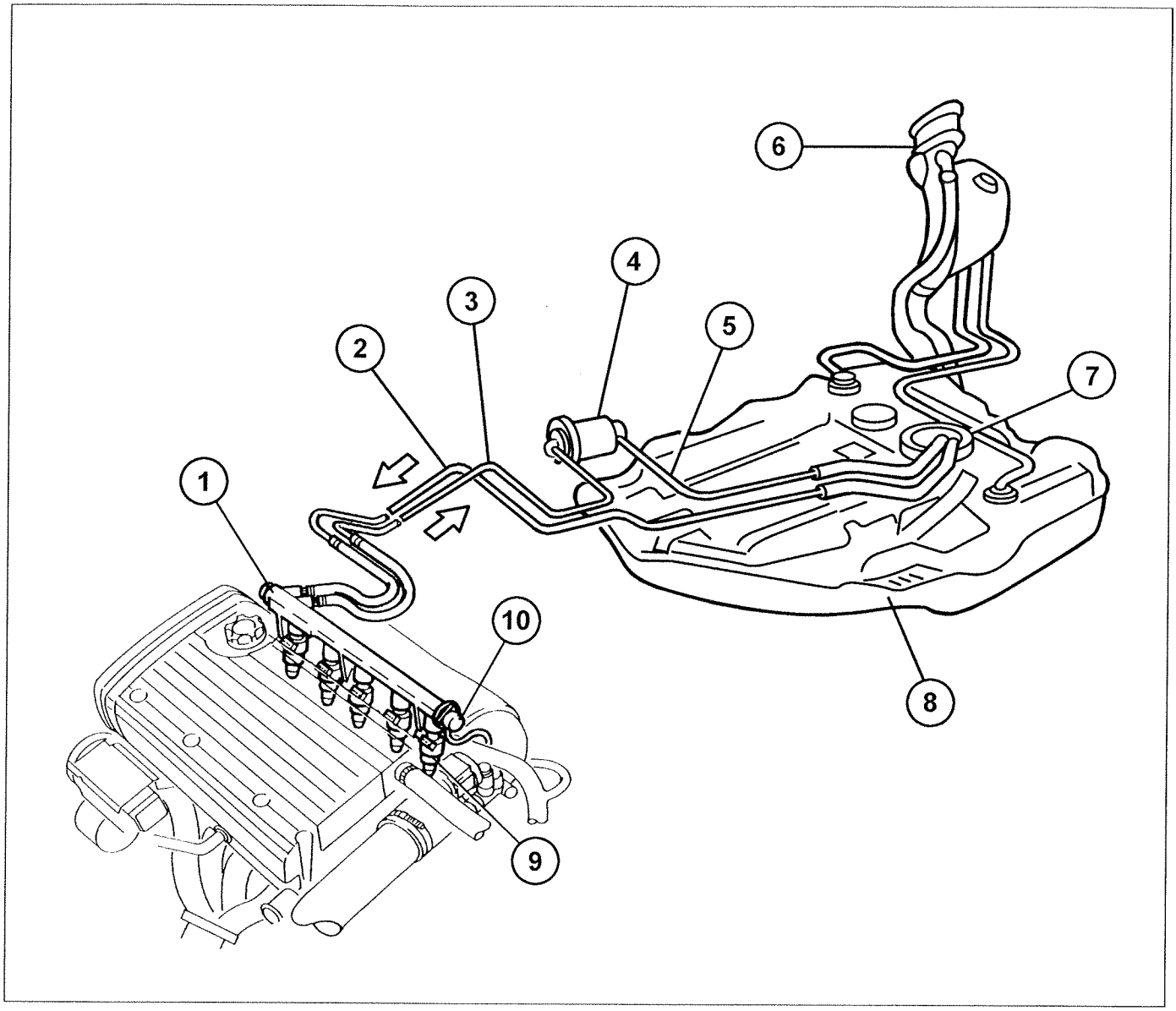

P3U09EW01

1. Fuel supply manifold
2. Return pipe
3. Supply pipe from filter to injectors
4. Filter
5. Supply pipe from tank to filter
6. Filler
7. Electric pump
8. Tank
9. Injectors
10. Pressure regulator

The fuel is supplied by means of an electric pump immersed in the tank which draws in the fuel and sends it to the filter and then to the injectors.

The fuel supply pressure at the injectors is kept constant and proportional to the value of the pressure in the inlet manifold by means of the pressure regulator which acts on the fuel flow rate in order to keep the rise in pressure at the injectors constant.

The excess fuel flows, from the pressure regulator, not under pressure, to the tank.

Copyright by Fiat Auto

DIAGRAM SHOWING AIR INTAKE CIRCUIT

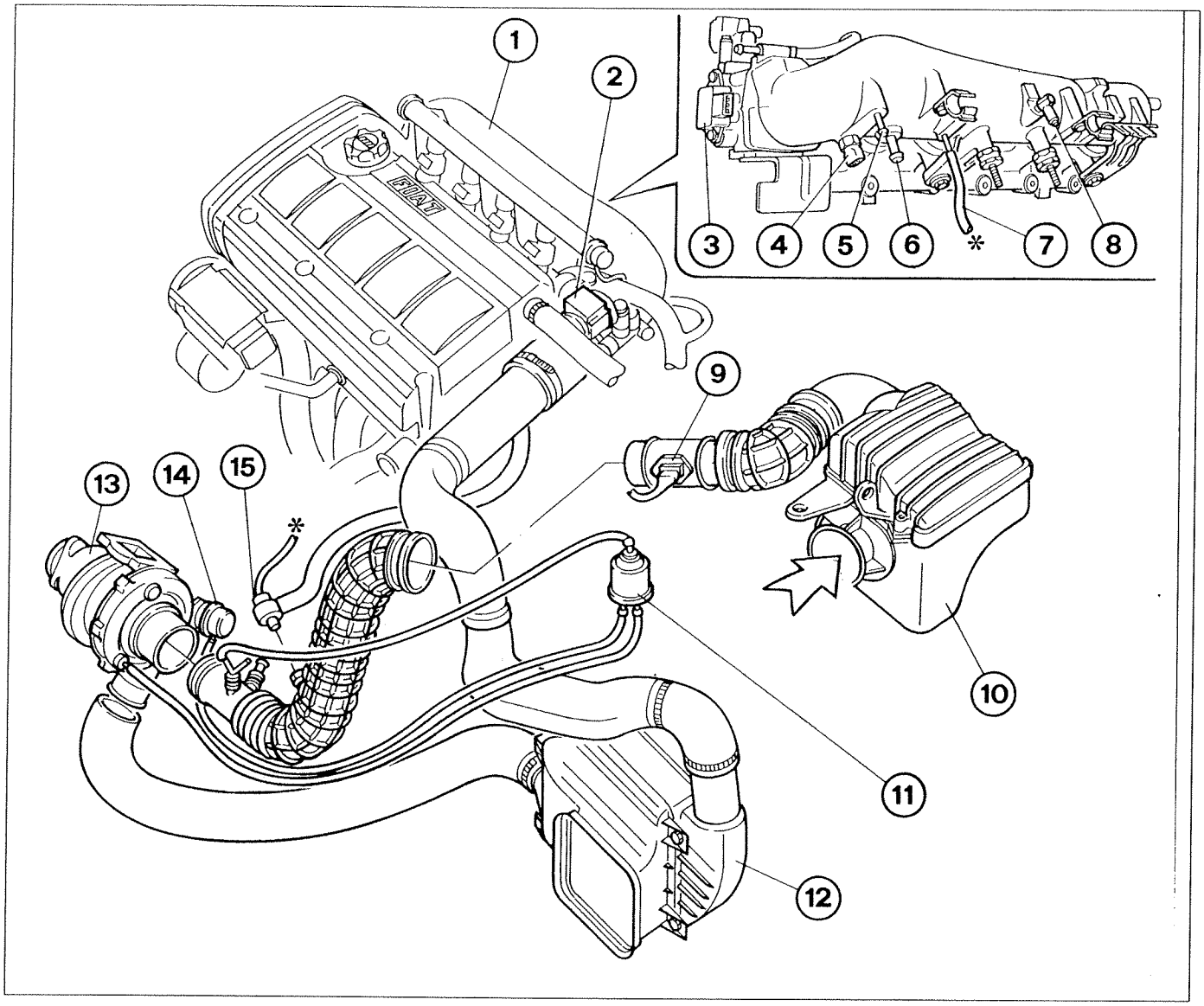

P3U10EW01

(*) Pipe connecting by-pass valve to inlet manifold

1. Inlet manifold
2. Engine idle speed actuator
3. Butterfly valve position sensor
4. Air temperature sensor
5. Intake for anti-evaporation system
6. Intake for brake servo
7. Intake for by-pass valve
8. Intake for inlet gas coming from the engine crankcase
9. Flow meter
10. Air filter
11. Pierburg solenoid valve
12. Intercooler
13. Turbocharger
14. Waste gate valve
15. By-pass valve

DIAGRAM SHOWING FUEL ANTI-EVAPORATION CIRCUIT

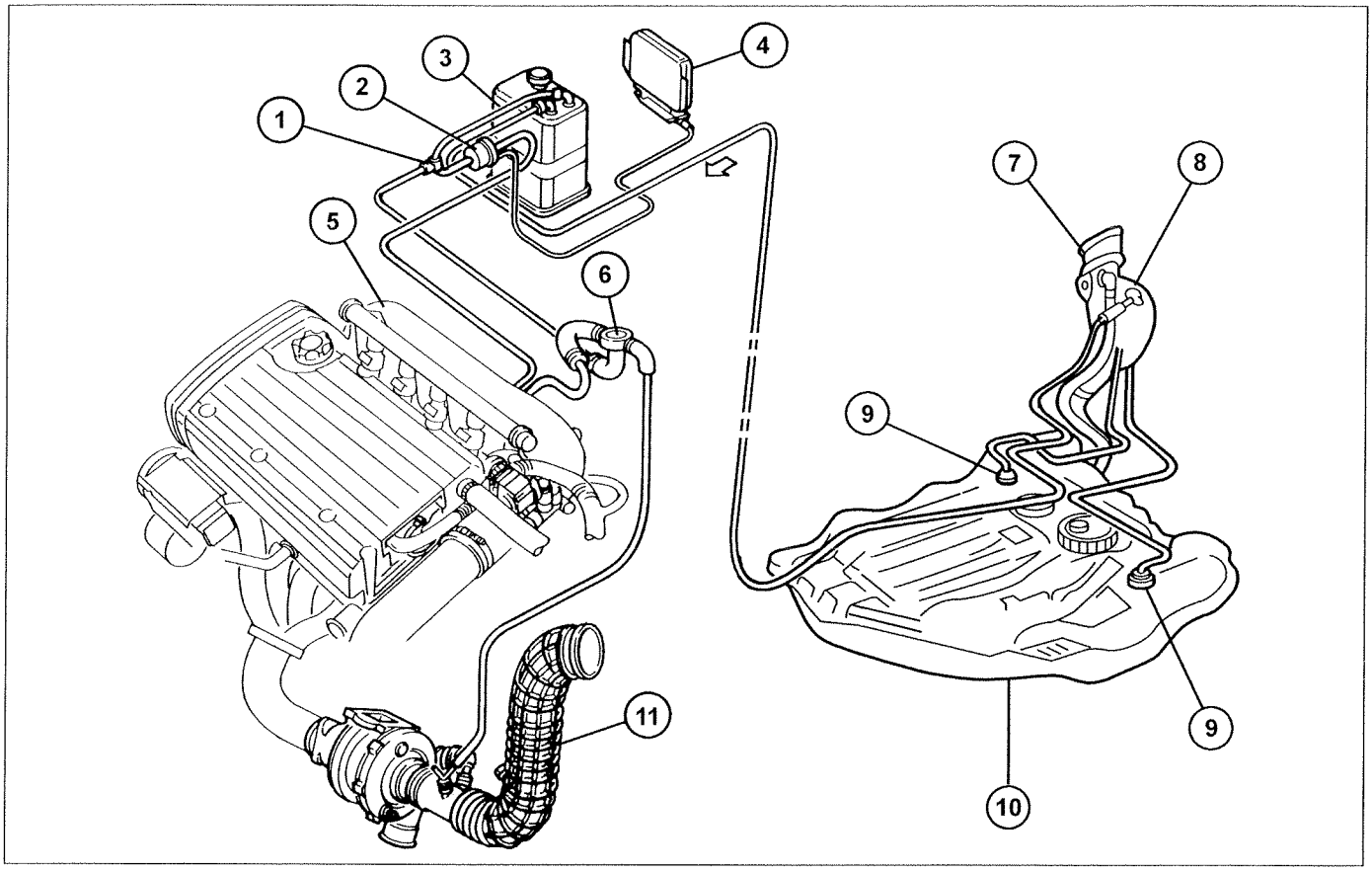

P3U11EW01

1. T connector
2. Fuel vapour cut out solenoid valve
3. Charcoal filter
4. Injection/ignition control unit
5. Inlet manifold
6. Vapour recirculation pneumatic valve
7. Filler with safety and ventilation valve
8. Fuel vapour separator
9. Multi-purpose valves
10. Tank
11. Inlet duct to the turbocharger

The anti-evaporation system is designed to prevent the fuel vapours, made up of the lighest particles of hydrocarbons which basically form in the tank, from being discharged into the atmosphere.
The system operates, above all, at high outside temperatures, when the temperature of the fuel increases and consequently the tendency for evaporation increases; in this situation, there is an increase in the pressure inside the tank (10).
In particular, even with the tank (10) full, with the vehicle stationary, the multi-purpose valves (9) remain open and therefore allow the vapours to reach the separator (8) from where, on condensing, they mainly return to the tank (10).
If, on the other hand, there is a lot of splashing around whilst driving or the vehicle overturns, the valves (9) close preventing the escape of fuel.
When the pressure inside the tank reaches around 30-40 mbar, the multi-purpose valves (9) open and the fuel vapours reach the charcoal filter (3). The valves (9) also allow an intake of air into the tank through the charcoal filter, for example following the lowering of the fuel level with the consequent vacuum which is created inside the tank.
The vapours then reach the inlet manifold (5) when the electronic control unit (4) operates the opening of the solenoid valve (2) or when the pressure which forms in the inlet manifold is sufficient to open the pneumatic valve (6).
If the pressure inside the tank (10) increases and exceeds the limit, the safety valve (7) intervens and allows the excess pressure to be discharged outwards. If necessary, the valve (7) can open in the opposite direction to ventilate the tank (10) if the vacuum becomes to great.

Copyright by Fiat Auto

SYSTEM FOR RECIRCULATING GASES COMING FROM THE ENGINE CRANKCASE (BLOW-BY)

This system controls the emissions, from the engine crankcase, of the breather gases made upof air/petrol mixtures and unburnt gases which escape through the piston seals as well as the lubricant oil vapours, recirculating them to the inlet.

The breather gases, directed by special partitions, rise above the engine oil filler and then pass through coils, under the tappet cover, where they lose part of the oil which they contain which goes to the camshafts.

The remaining gases come out of the intake (1) which contains a spark-out (2) (to prevent combustion due to flame returns from the butterfly casing) and reach the separator (6).

When the breather gases pass through the separator (6) they lose part of the oil they contain which returns to the sump via the pipe (5) in the form of droplets. The remaining gases reach the inlet hose through the pipe (3).

A second pipe (8), with a one-way valve (7), which is connected to the inlet manifold downstream of the butterfly valve, ensures that, when the engine is idling, the vacuum in the manifold, lifts the valve (7) diaphragm and draws in the vapours coming from the crankcase.

When the engine is supercharged, the pressure in the manifold closes the valve; this avoids placing the crankcase under pressure.

The valve is made up of a plastic casing containing a calibrated spring **(the word crankcase is written on the black part of the valve so that it can be fitted correctly)**

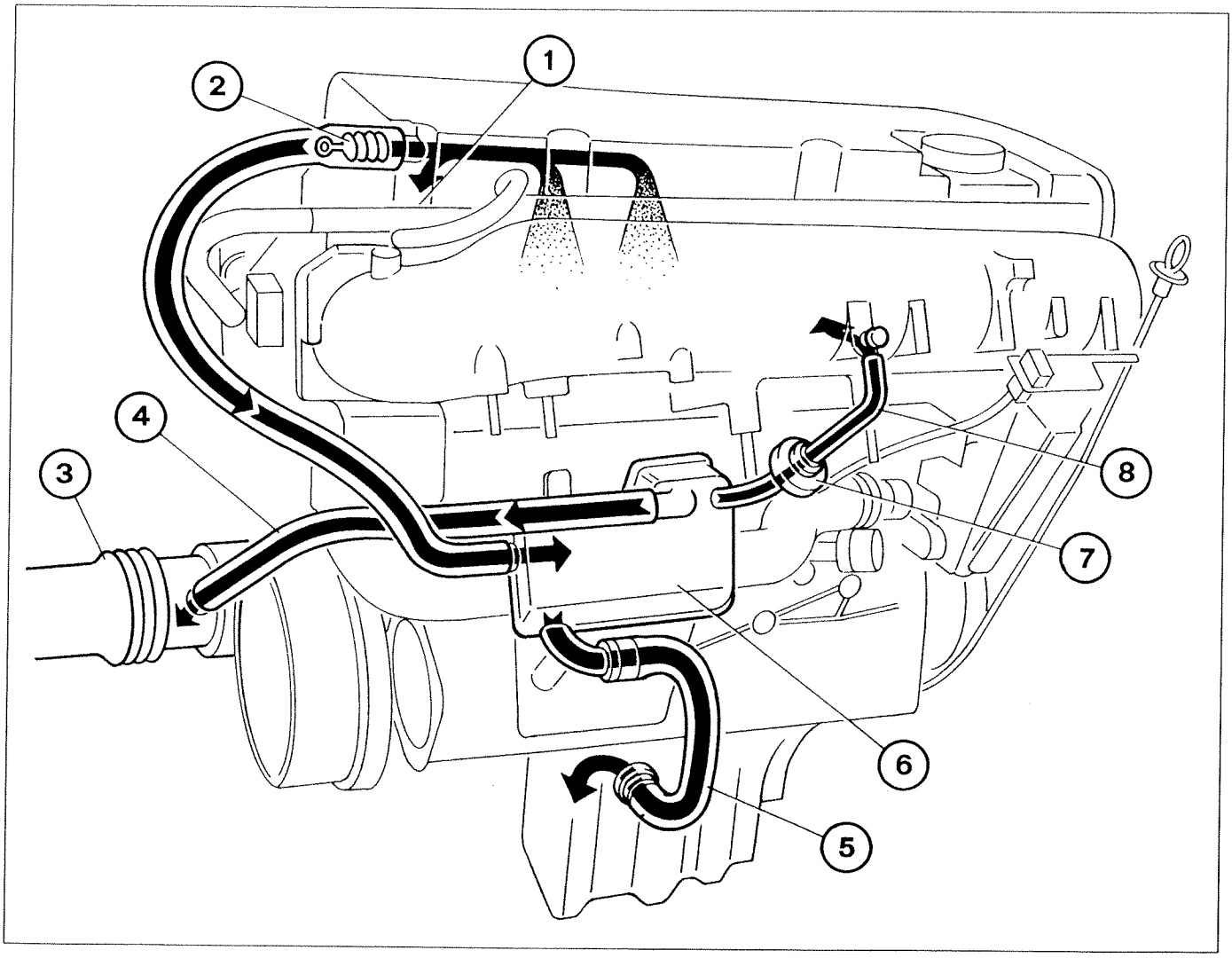

P3U12EW01

ENGINE EXHAUST ASSEMBLY DIAGRAM

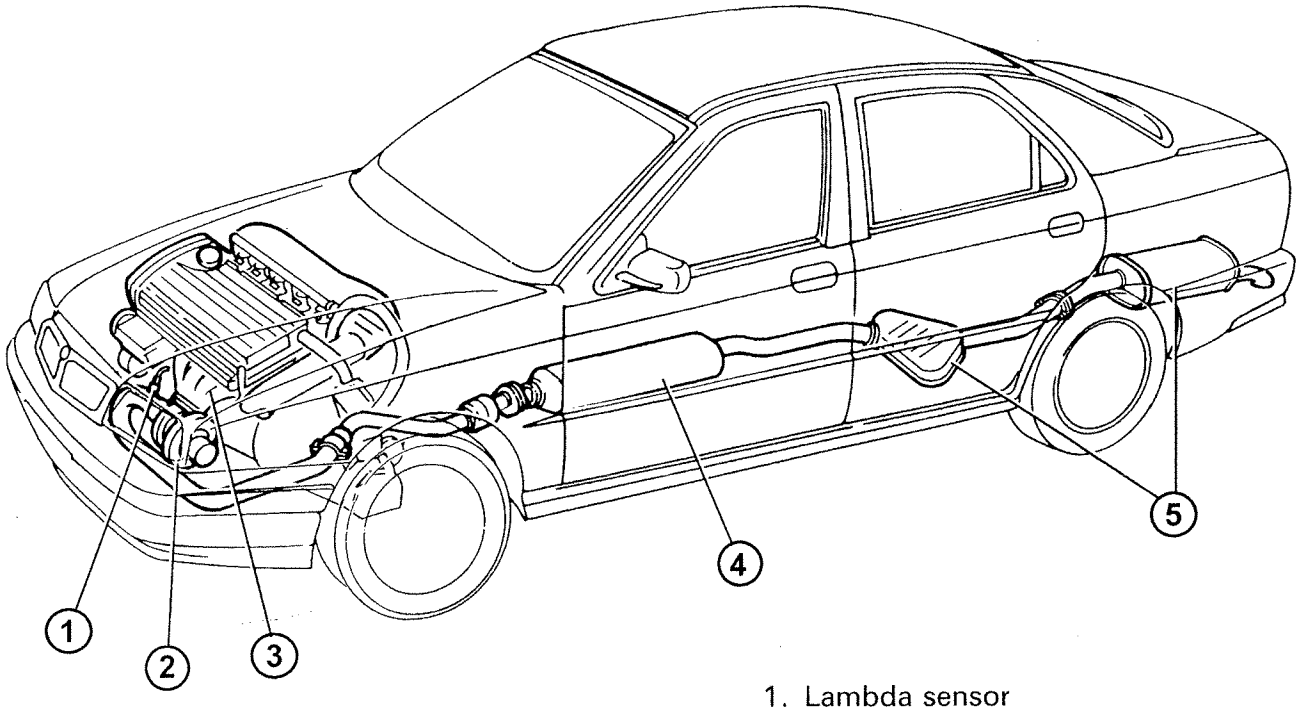

1. Lambda sensor
2. Turbocharger
3. Exhaust manifold
4. Catalytic silencer
5. Silencers

P3U13EW01

The closed loop control of the mixture strength is activated by the Lambda sensor which detects the oxygen content in the exhaust gases upstream of the catalytic silencer.

The Lambda sensor measurements allow the electronic control unit to continuously correct the quantity of petrol injected thereby keeping the air/fuel ratio constant.

In this way the harmful exhaust emissions are controlled, a task completed by the three way catalytic converter (catalytic silencer).

The efficient operation of the catalytic silencer and, consequently, the containing of the toxic exhaust gases, depends on the ratio of the engine/fuel mixture received by the engine.

The three-way catalytic converter makes it possible to simultaneously keep down the levels of the three pollutant gases in the exhaust gases: unburnt hydrocarbons (HC), carbon monoxide (CO), nitrogen oxides (NOx).

Two types of chemical reaction take place inside the converter;

- oxidation of the CO and the HC, converted into carbon dioxide (CO2) and water (H2O);
- reduction of the NOx, converted into Nitrogen (N2).

The following causes can rapidly put the catalytic converter out of action and make it irreparable:

- the presence of lead in the petrol which lowers the degree of conversion to such an extent as the make the presence of the catalytic converter in the system useless;
- the presence of unburnt petrol in the converter: in effect, a flow of petrol lasting 30s in an ambient of 800 °C (temperature inside the silencer) is sufficient to cause the catalyzer to melt and break.

It is vital for the injection/ignition system to be working perfectly, therefore **the spark plug leads should not be disconnected with the engine running and, in the case of tests, the catalytic converter should be replaced with an equivalent length of pipe.**

Copyright by Fiat Auto

INJECTION/IGNITION SYSTEM WIRING DIAGRAM

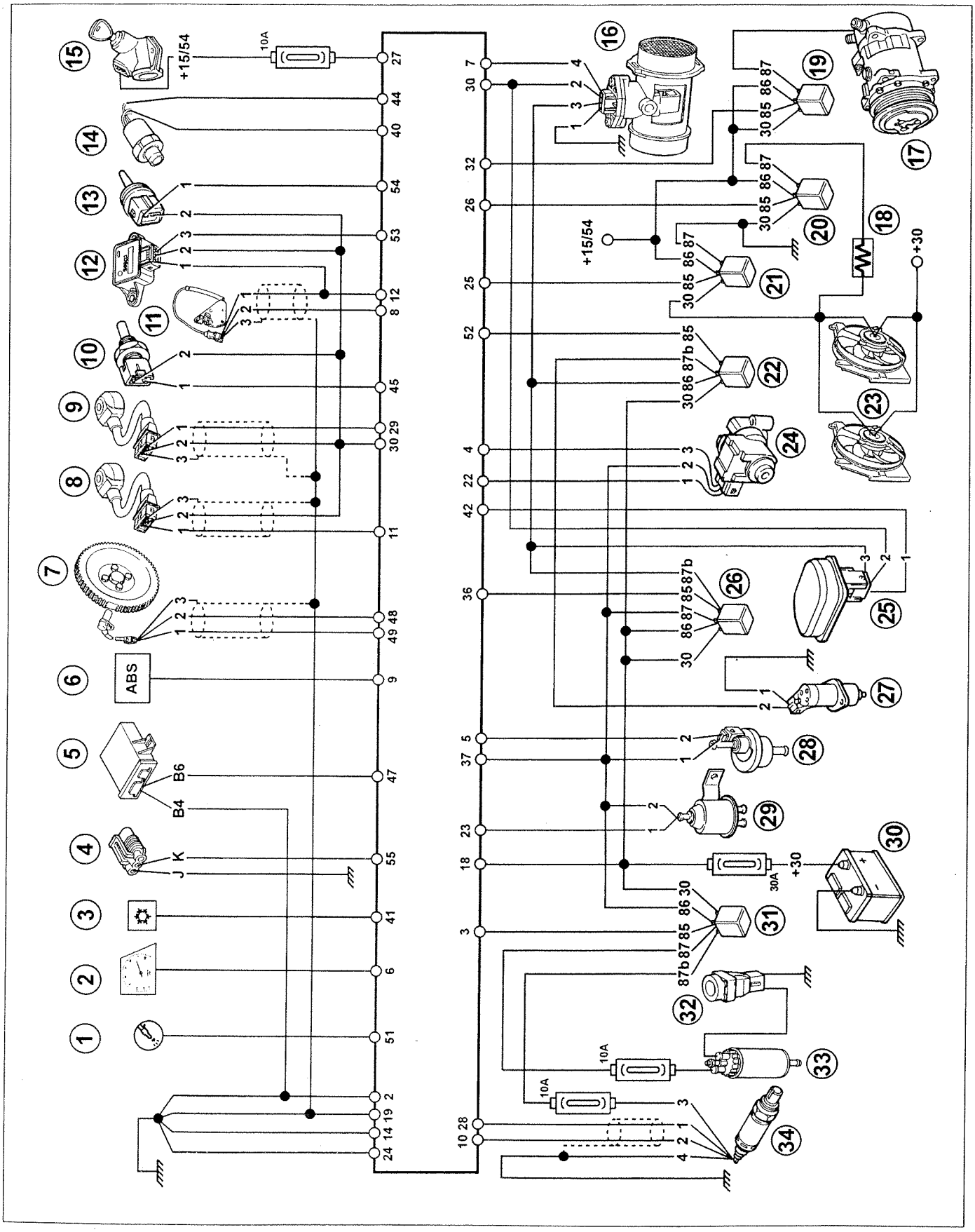

Connection between control unit/ignition coils and injectors

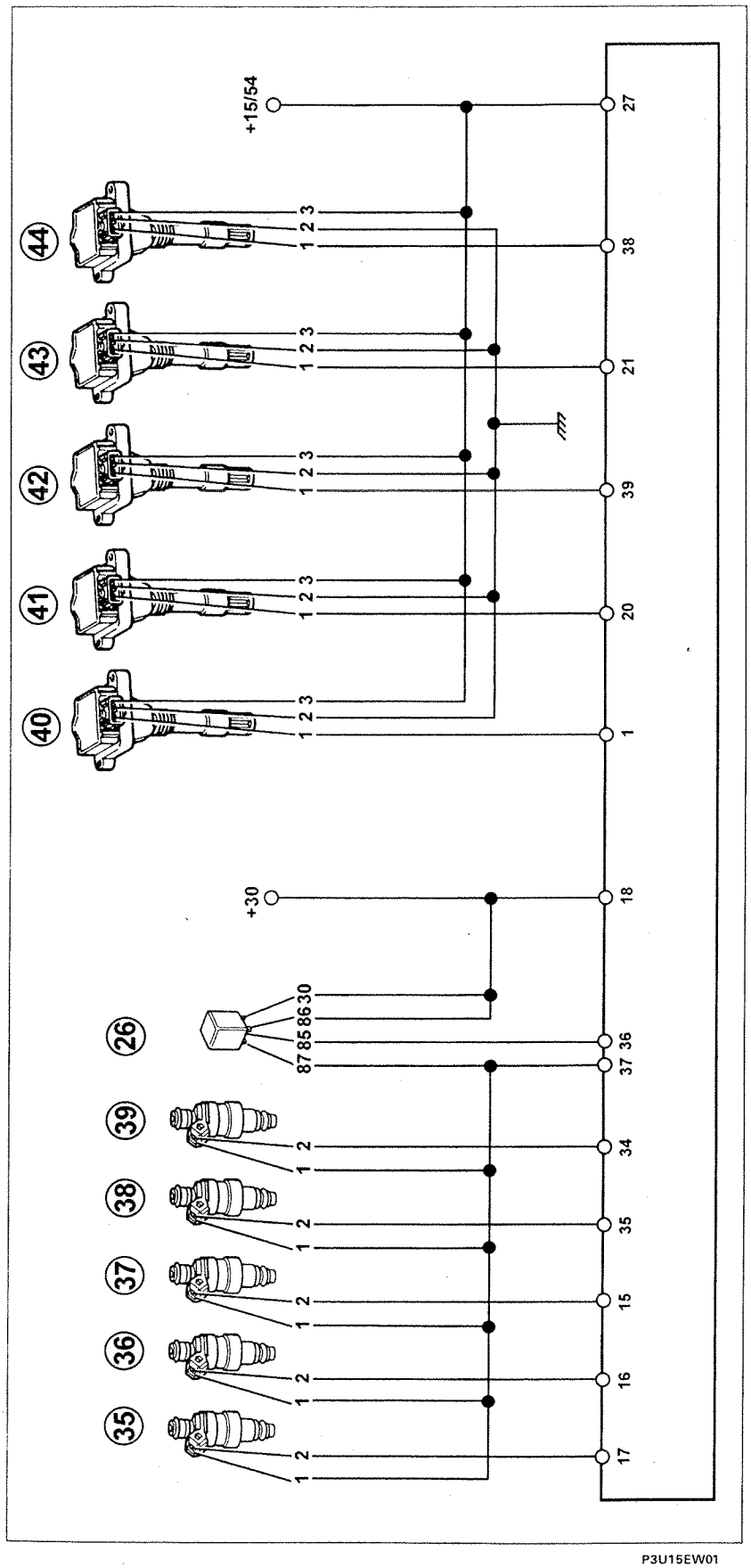

P3U15EW01

Key:

1. Injection/ignition system failure indication (at Infocenter)
2. Rev counter signal
3. Climate control engagement
4. Diagnostic socket
5. Lancia CODE control unit
6. Vehicle speed signal (from ABS control unit)
7. Rpm and TDC sensor
8. Detonation sensor 1
9. Detonation sensor 2
10. Coolant temperature sensor
11. Timing sensor
12. Butterfly valve position sensor
13. Intake air temperature sensor
14. Three stage pressure switch
15. Ignition switch
16. Flow meter
17. Air conditioning compressor
18. Radiator fan 1st speed resistance
19. Air conditioning compressor electro-magnet coupling relay
20. Radiator fan 1st speed relay
21. Radiator fan 2nd speed relay
22. Phase transformer solenoid valve relay
23. Radiator fans
24. Engine idle speed actuator
25. Atmospheric pressure sensor
26. Injection/ignition system relay feed
27. Phase transformer solenoid valve
28. Fuel vapour solenoid valve
29. Supercharging pressure solenoid valve
30. Battery
31. Electric fuel pump and Lambda sensor relay
32. Inertia switch
33. Electric fuel pump
34. Lambda sensor

35 to 39. Injectors for cylinders N°1 to 5

40 to 44. Ignition coils for cylinders N° 1 to 5

Copyright by Fiat Auto

INJECTION/IGNITION SYSTEM COMPONENTS

The injection/ignition system basically consists of wiring, an (injection/ignition) electronic control unit and the following sensors and actuators:

Sensors

- Rpm and T.D.C. sensor
- Detonation sensors
- Atmospheric pressure sensor
- Coolant temperature sensor
- Timing sensor
- Butterfly valve position sensor
- Intake air temperature sensor
- Intake air flow rate sensor (flow meter)
- Lambda sensor

Actuators

- Engine idle speed actuator
- Phase transformer solenoid valve
- Fuel vapour cut out solenoid valve
- Supercharging pressure solenoid valve
- Electric fuel pump
- Injectors
- Ignition coils
- Spark plugs

INJECTION/IGNITION SYSTEM WIRING

The connection between the different system components is achived through a single set of wiring with various type connectors grouped in special ducts fitted on the engine (pre-wiring).

INJECTION/IGNITION ELECTRONIC CONTROL UNIT

The electronic unit is located under the glove compartment (right side) and consists of thick film hybrid circuits and is connected to the electrical wiring by means of a **55 way** (or pole) multiple connector.

It receives all the information concerning the engine operating conditions transmitted by the various sensors.

Using this data and, with the aid of programmes indelibly stored in its memory, the control unit is capable of achieving the following objectives:

1. It manages the injection time and frequency; it supplies the quantity of fuel calculated for each cylinder through a phased, sequential operation (1-2-4-5-3).
   In practice, the air/fuel ratio should always remain within the optimum value, defined during the tuning, in order to limit fuel consumption, reduce harmful exhaust gas emissions and ensure optimum engine thermal efficiency.
2. It electronically controls the moment of ignition (ignition advance)
3. It controls the air flow rate at the rotation speed through the specific sensor in order to allow the smooth running of the engine as the environmental parameters and loads applied vary.
4. By implementing particular programmes, it detects any operating defects in the various sensors recorded in the RAM and replaces the incorrect or not received data with replacement values to ensure the operation of the engine even in emergency conditions (RECOVERY).
5. Through the serial line (diagnostic socket) it supplies the diagnostic equipment, if connected, with the data relating to operating faults detected and memorized.

Identification of connections at the control unit (Pin-out)

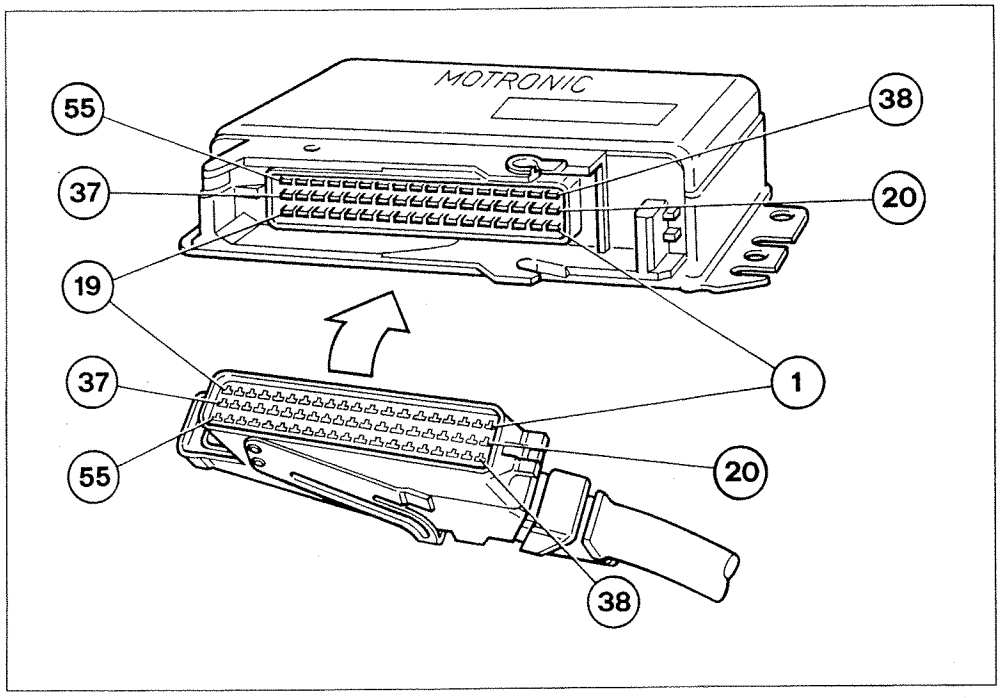

P3U17EW01

1. Ignition coil for cylinder N°1
2. Engine earth
3. Electric fuel pump and Lambda sensor relay feed
4. Engine idle speed actuator
5. Fuel vapour solenoid valve
6. Rev counter signal
7. Intake air flow meter
8. Timing sensor
9. Vehicle speed signal (from ABS control unit)
10. Lambda sensor
11. Detonation sensor
12. Timing sensor
13. Not connected
14. Engine earth
15. Injector for cylinder N°3
16. Injector for cylinder N°2
17. Injector for cylinder N°1
18. Supply (+30)
19. Engine earth
20. Ignition coil for cylinder N°2
21. Ignition coil for cylinder N°4
22. Engine idle speed actuator
23. Supercharging pressure solenoid valve
24. Engine earth
25. Radiator fan 2nd speed relay
26. Radiator fan 1st speed relay
27. Supply (+15/54)
28. Lambda sensor
29. Detonation sensor
30. Supply for various sensors
31. Not connected
32. Climate control activation go ahead sensor
33. Not connected
34. Injector for cylinder N°5
35. Injector for cylinder N°4
36. Injection/ignition system relay
37. Supply (+30)
38. Ignition coil for cylinder N°5
39. Ignition coil for cylinder N°3
40. Three stage pressure switch
41. Not connected
42. Atmospheric pressure sensor
43. Not connected
44. Pressure switch
45. Coolant temperature sensor
46. Not connected
47. Lancia CODE control unit
48. Rpm and TDC sensor
49. Rpm and TDC sensor
50. Not connected
51. System failure indication
52. Phase transformer solenoid valve relay
53. Butterfly valve position sensor
54. Intake air temperature sensor
55. Fiat/Lancia Tester diagnostic socket

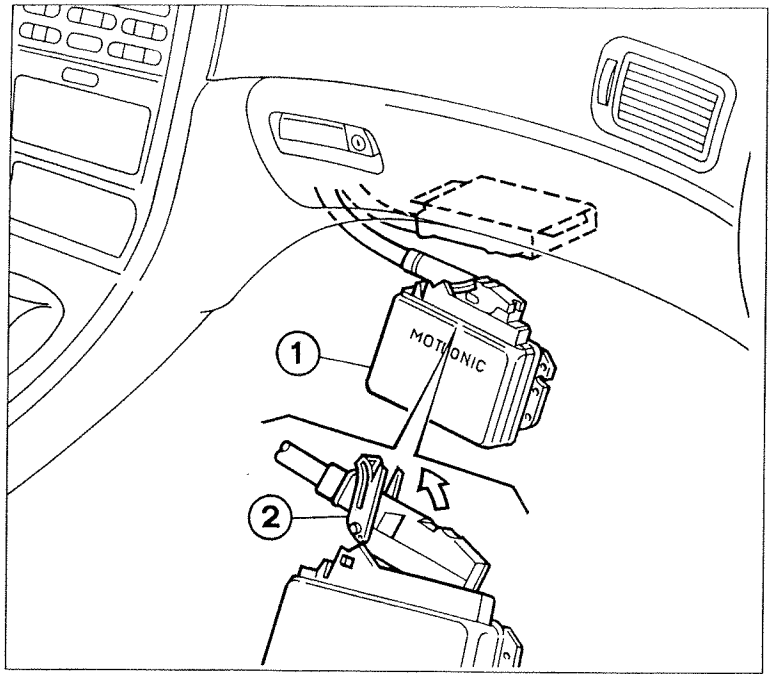

P3U18EW01

Removing - refitting electronic control unit

The electronic control unit is located under the glove compartment. To remove the control unit, proceed as follows:

- remove the cover under the dashboard
- undo the bolts fixing the control unit (1) to the mounting bracket;
- to remove the multiple connector, pull the connector clip (2) upwards.

There may be voltage at the terminals which are not connected, therefore no connections should be made as there is a risk of damaging the control unit.
The operations of fitting and extracting the multiple connector should be carried out with the ignition switched off.

IGNITION COILS (0 221 504 006)

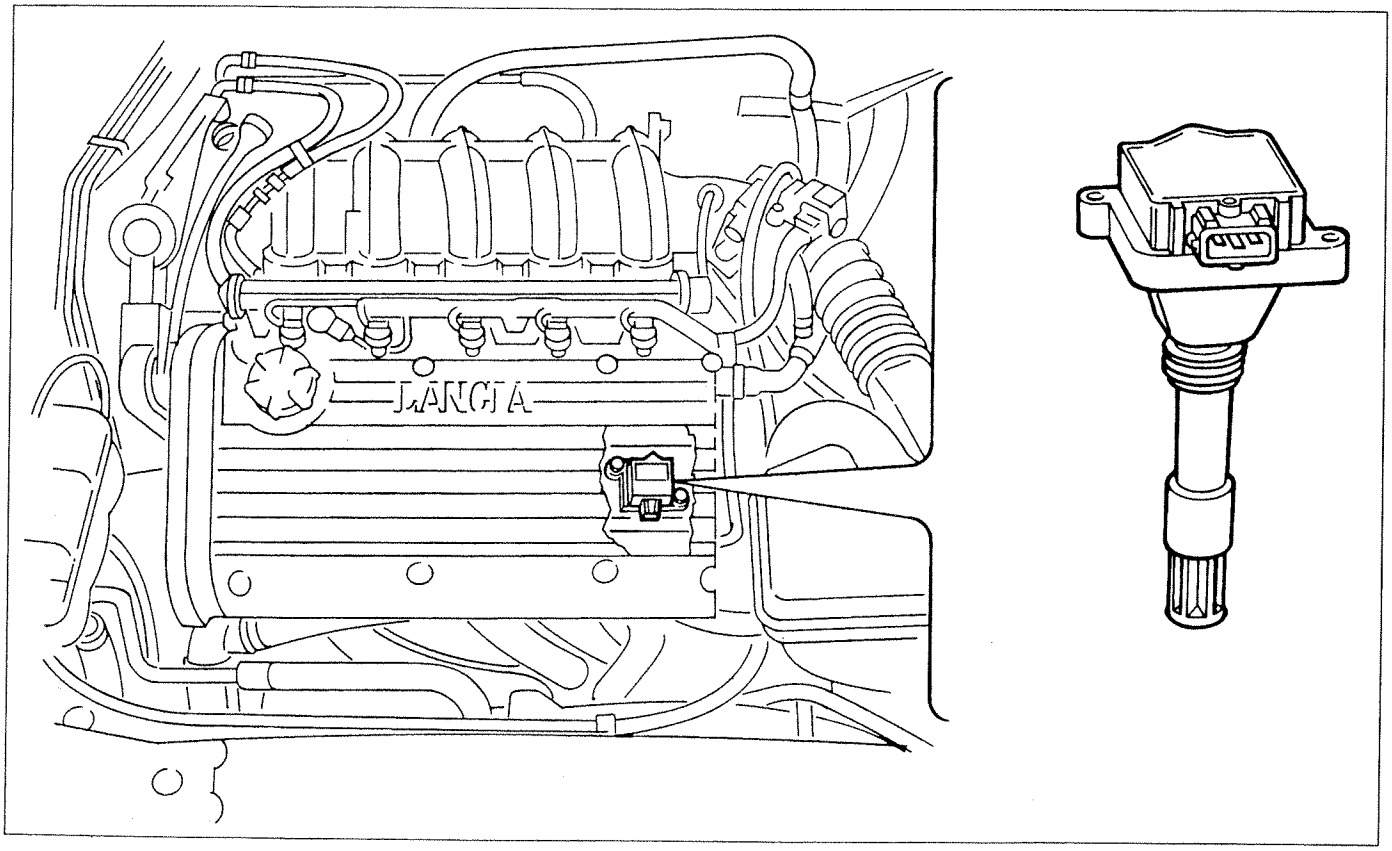

P3U18EW02

The ignition is the static advance electronic type with a single coil for each spark plug; this solution eliminates the high tension circuit, increasing reliability and safety and decreasing the risk of interference due to high tension leads and connections.

It involves a normal coil which increases the voltage of the impulse sent to the spark plugs: each individual coil, located in the cylinder head, supplies a spark plug directly without intermediate cables.

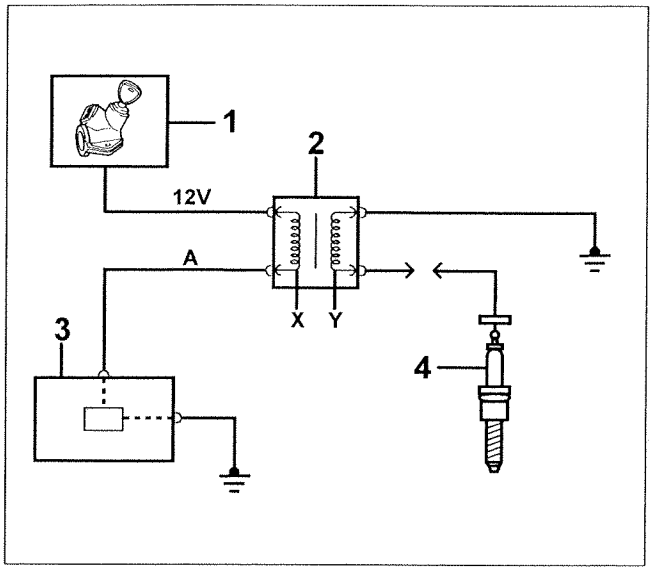

P3U19EW01

Electrical features

Primary winding inductance	3 mH
Primary winding resistance	0,4 Ω
Anti-interference resistance	1 KΩ

Electrical connections diagram

A. Operating signal
X. Primary winding
Y. Secondary winding
1. Supply through ignition switch
2. Single coil
3. Electronic control unit
4. Spark plug

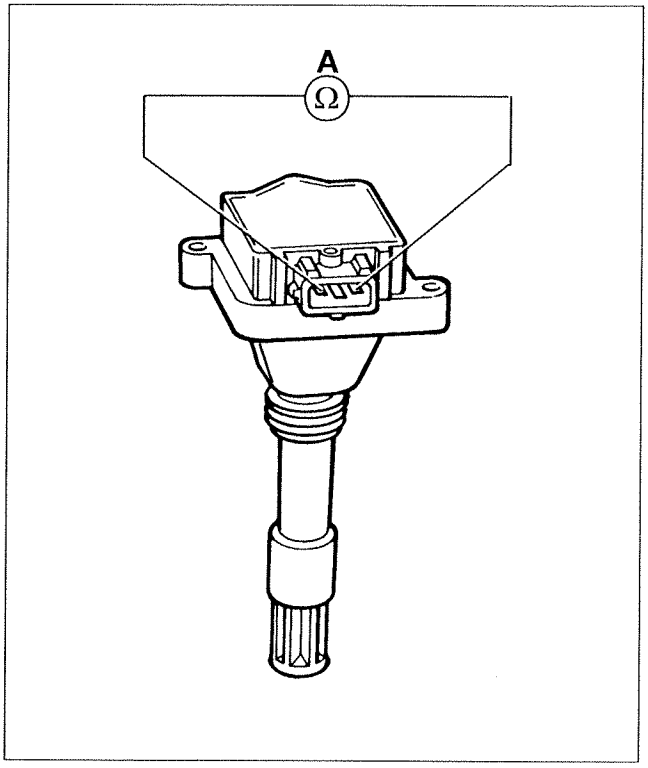

P3U19EW02

Checking coil primary circuit resistance

The resistance is checked by connecting an ohmmeter to the external pins of the conector, as shown in the diagram.

Primary resistance: 0.4 ohm

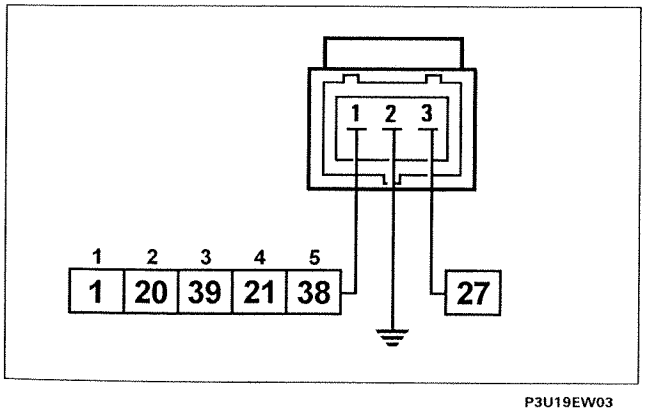

P3U19EW03

Wiring connector

The numbers indicate the corresponding control unit pins arranged in the order of the number of cylinders.

Copyright by Fiat Auto

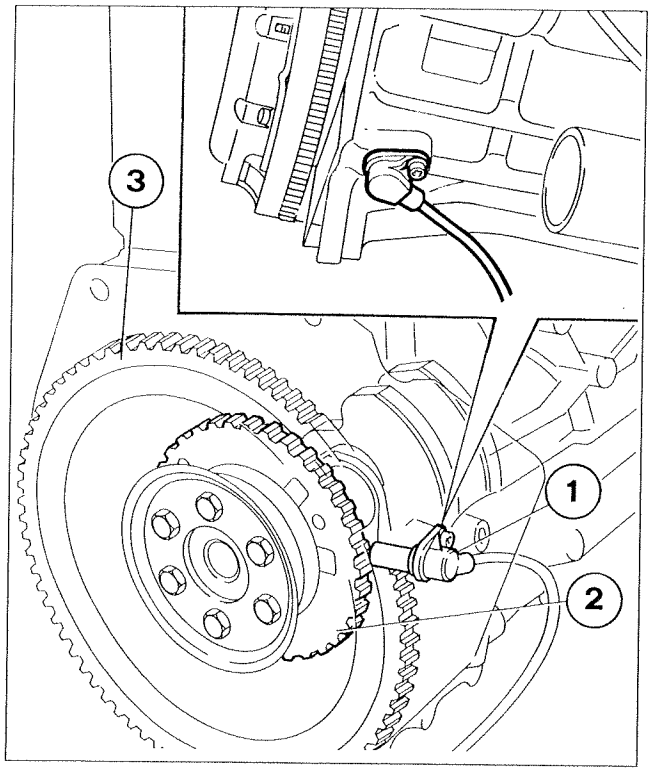

P3U20EW01

1. Rpm sensor
2. Toothed pulley
3. Engine flywheel

RPM AND TDC SENSOR (0.261.210.119)

The sensor for measuring the rpm and TDC is the inductive type, in other words it operates through the variation in the magnetic field creating by the teeth of the pulley (flywheel) inside the crankcase which is fixed to the crankshaft rear counter-weight. In this way the sensor is fixed to the crankcase and checks and adjustments to the gap and the angular position are no longer required.

The teeth which pass in front of the sensore alter the gap between the pulley and the sensor; the flow, which varies as a result, creates an alternating voltage whose range depends on the number of revs.

The flywheel is made up of 58 teeth plus a space equivalent in size to the missing two teeth.

The reference defined by the space for the missing two teeth makes up the basis for measuring the point of synchronism (TDC).

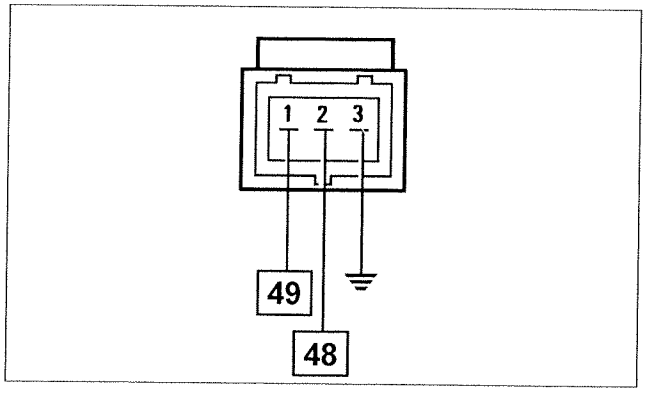

P3U20EW02

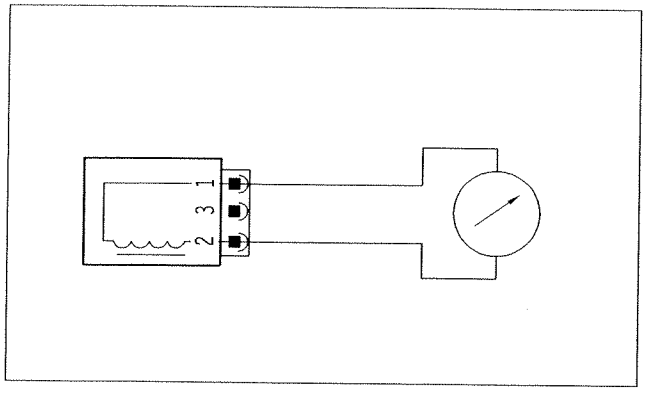

P3U20EW03

Removing-refitting

Position the vehicle on a lift then, working from underneath the vehicle:

- Disconnect the electrical connector;
- undo the bolt fixing the sensor and remove it from its housing.

Wiring connector

The sensor is connected to the electronic control unit (pins 48 and 49) by means of twisted cables covered by a protective outer casing connected to earth.

NOTE *The numbers indicate the corresponding control unit pins*

Checking the resistance

The resistance of the sensor can be measured by by disconnecting the connector and connecting an ohmmeter to the sensor.

Resistance: 774-946 ohm at 20°C

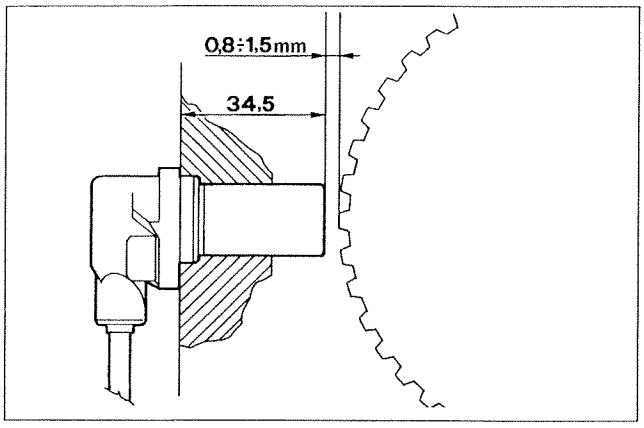

P3U21EW01

When measuring the distance, it is necessary to be at a right angle with the flywheel and to be by a tooth and not a gap.

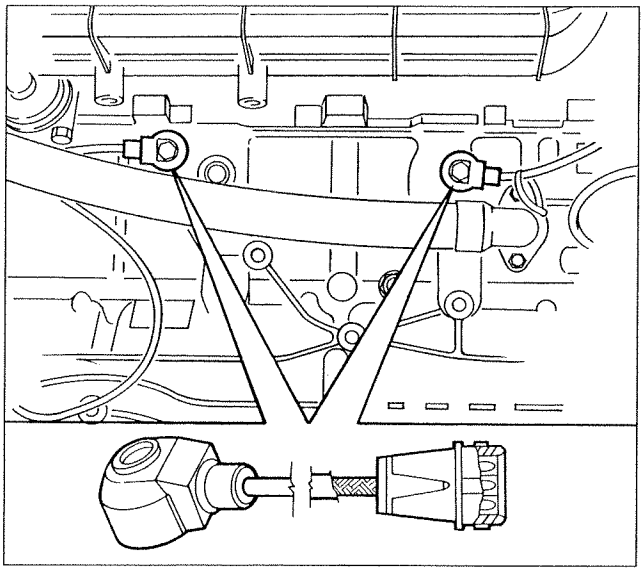

P3U21EW02

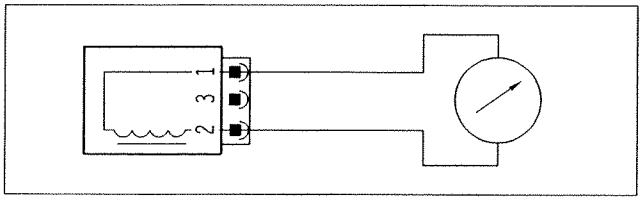

P3U21EW04

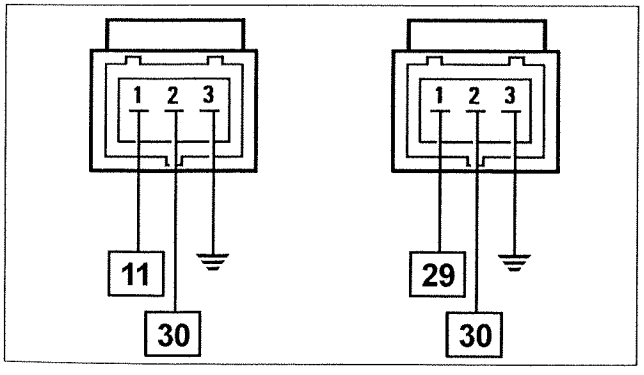

P3U21EW03

Checking the gap

The rpm and TDC sensor is fixed directly on the crankcase and therefore the gap and the angular position do not require any adjustment. If a fault is suspected, it is possible to check the gap, proceeding as follows:

- remove the rpm and TDC sensor;
- check that the distance between the surface of the sensor and the flywheel tooth corresponds to the sum of the length of the sensor probe (34.5 mm) and the gap (0.8 - 1.5 mm).

DETONATION SENSORS (0.261.231.095)

The detonation sensors are located on the mono bloc underthe inlet manifolds and between cylinders 1-2 and 4-5.
These sensors have a bush to prevent inappropriate torque tightening. **If they are replaced, do not place shims or washers between the engine crankcase and sensor contact surfaces.**
When the engine is knocking (detonation), vibrations of a certain frequency are produced in the cylinder block/crankcase.
This phenomenon has mechanical repercussions on a piezoelectric crystal which sends a signal to the control unit; on the basis of this signal the control unit reduces the ignition advance (by 3° up to a maximum of 9.7°) until the phenomenon disappears. Afterwards, the advance is gradually restored to the basic value.

Checking the resistance

The resistance of the sensor can be measured by by disconnecting the connector and connecting an ohmmeter to the sensor.

Resistance 532 - 588 ohm at 20 °C

Wiring connector

The numbers indicate the corresponding control unit pins.

Removing-refitting

Disconnect the electrical connector, undo the bolt fixing the detonation sensor and remove it.

Recovery

The ignition advance is calculated according to the temperature of the engine coolant and the temperature of the intake air.

Copyright by Fiat Auto

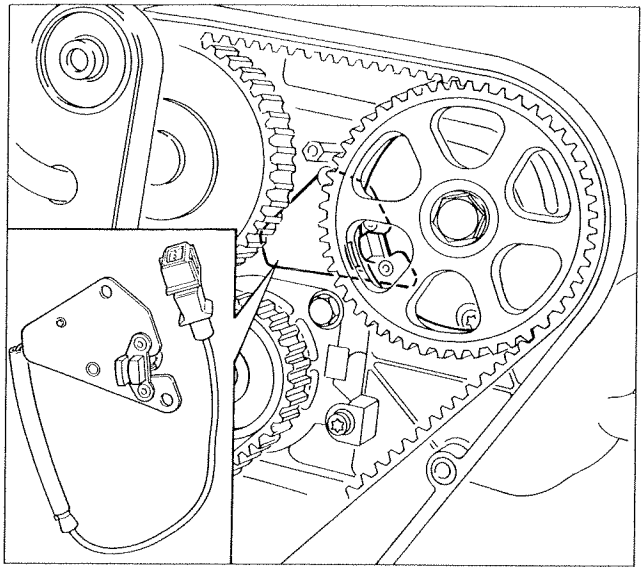

P3U22EW01

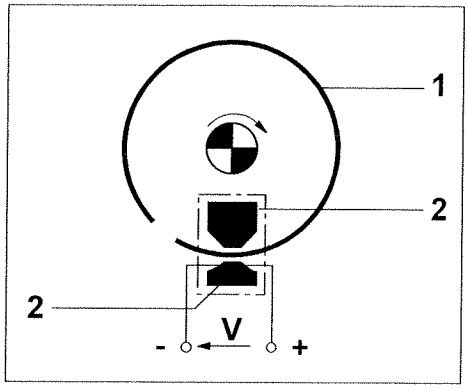

P3U22EW02

1. Deflector (pulley seal)
2. Magnetic material

TIMING SENSOR (0.232.101.026)

The injection in the Bosch Motronic M 2.10.4 system is the sequential, timed type, in other words the injection of the fuel takes place sequentially for each cylinder during the inlet stroke.
To achieve this, in addition to the rpm and TDC signal, the electronic control unit also uses a timing signal to determine the injection point.
The signal sent to the control unit is produced by a Hall effect sensor fitted by the camshaft drive pulley, exhaust side.

Operating principle

A semi-conductor layer through which the current passes, immersed in a normal magnetic field (lines of force perpendicular to the direction of the current) creates a difference in power, known as "HALL" tension.
If the intensity of the current remains constant, the voltage produced only depends on the intensity of the magnetic field; it is therefore sufficient if the intensity of the magnetic field varies periodically in order to obtain a modulated electrical signal whose frequency is proportional to the speed at which the magnetic field changes.
To achieve this change, the sensor has a metal seal with an opening passing through it (the inner part of the pulley). As it moves, the metal part of the seal covers the sensor blocking the magnetic field with a resulting low output signal; conversely, at the opening where the magnetic field is present, the sensor produces a high signal.

As a result the high signal alternates with the low signal once for every two revolutions of the engir e, namely when cylinder N°1 is 78° before TDC.
This signal, jointly with the rpm and TDC signal, allows the control unit to recognize the cylinders and determine the injection point. The control unit checks that the timing signal is present for each engine revolution; if this signal is missing for two consecutive revolutions, the control unit signals the fault (with the warning light in the dashboard coming on) and does not allow the engine to be started.

Wiring connector

The numbers indicate the corresponding control unit pins

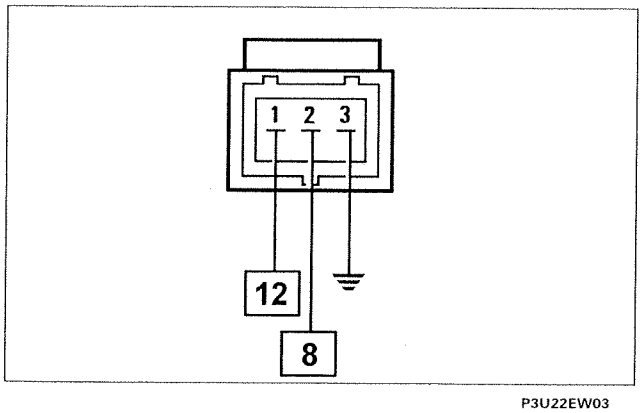

P3U22EW03

Removing-refitting

This operation involves removing the timing drive belt and the camshaft toothed pulley, exhaust side.
When these operations have been carried out it is necessary to:
- disconnect the electrical connector;
- Undo the fixing bolts and remove the sensor.

When refitting, reverse the procedure, following the instructions for refitting and tensioning the drive belt.

NOTE *The sensor does not require any type of adjustment.*

ELECTRIC FUEL PUMP (0.580.453.427)

The electric fuel pump is located inside the tank, housed in a mounting which also includes the fuel gauge.
The electric pump is the cell type with rollers, operated by an electric motor with permanent magnets, immersed in the fuel.
A disc rotor (1) positioned eccentrically in the pump casing contains metal rollers (2) in the cells arranged around its circumference which are thrust by centrifugal force against the outer race with the effect of ensuring the hydraulic seal.

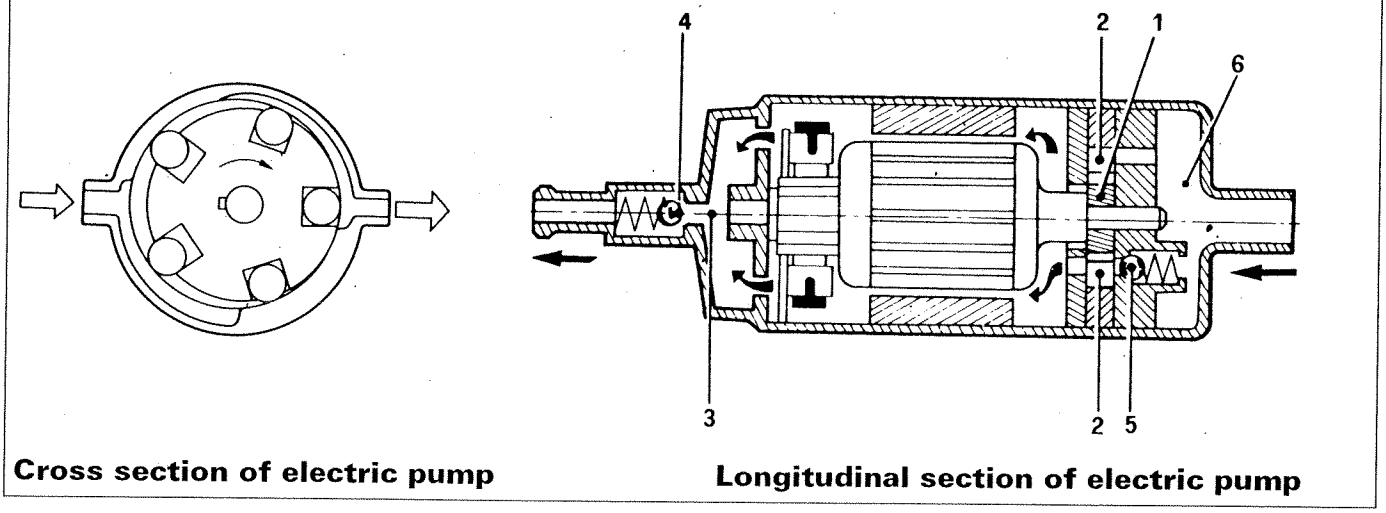

Cross section of electric pump **Longitudinal section of electric pump**

P3U23EW01

The fuel flows in the empty compartments and is compressed in the supply duct (3). A one-way valve (4) prevents the supply pipe from draining with the engine switched off.
An excess pressure valve (5) short circuits the supply in the inlet chamber (6) when the pressure exceeds 7.5 bar.
The electric pump starts to operate when the ignition switch is placed in the AVV position. When the starting stage is over, the electric pump continues to operate with the ignition switch in the ON position unless the engine speed goes below 225 rpm or the ignition is switched OFF.
If the engine switches off for any reason, with the ignition switch in the ON position, the operation of the pump is automatically interrupted for safety reasons.

Longitudinal diagrammatic section and external view of the electric fuel pump

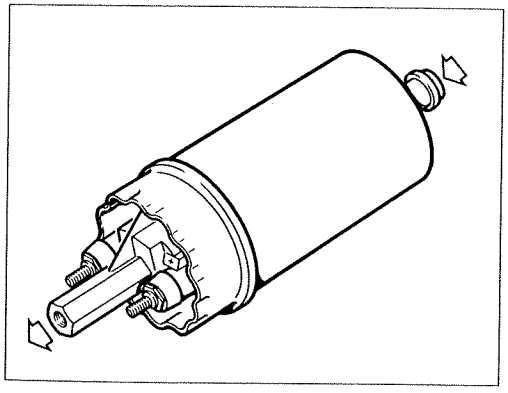

P3U23EW02

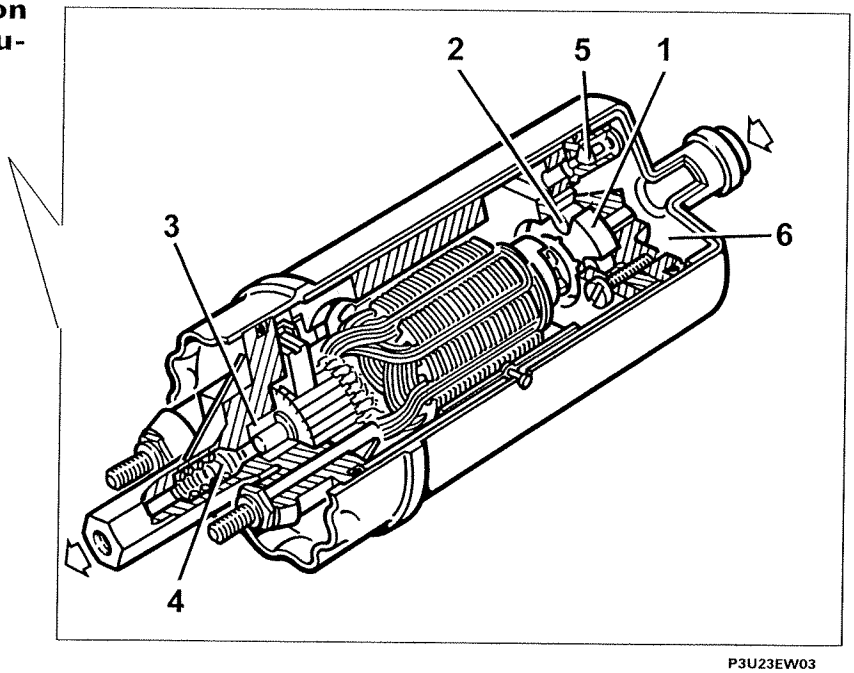

P3U23EW03

Copyright by Fiat Auto

FUEL SUPPLY MANIFOLD AND PRESSURE REGULATOR

The fuel supply manifold, whose function is to distribute the actual fuel to the injectors, is made from steel plate and is equipped with seats for the injectors and the pressure regulator and with fuel inlet and outlet connectors.

The fuel manifold is fixed to the inlet manifold by four brackets.

The pressure regulator is necessary for keeping the rise in pressure at the injectors constant.

It is a differential, diaphragm type device, regulated at a pressure of around 3 bar.

The pressure regulator is made up of a metal casing which contains a moving element comprising a metal casing (8) and the diaphragm (4) with a spring (5) loading. When the pre-set force, made up of the vacuum on the opposite part of the diaphragm and the spring (5) loading, is overcome, the fuel thrust by the pump opens a valve (7) which allows the excess fuel to flow through the pipe (2) to the tank.

The chamber housing the spring is in contact with the engine inlet duct (6) (vacuum signal). This keeps the difference between the pressure of the fuel and the vacuum in the inlet manifold constant in all engine operating conditions.

Longitudinal section of fuel supply manifold and pressure regulator

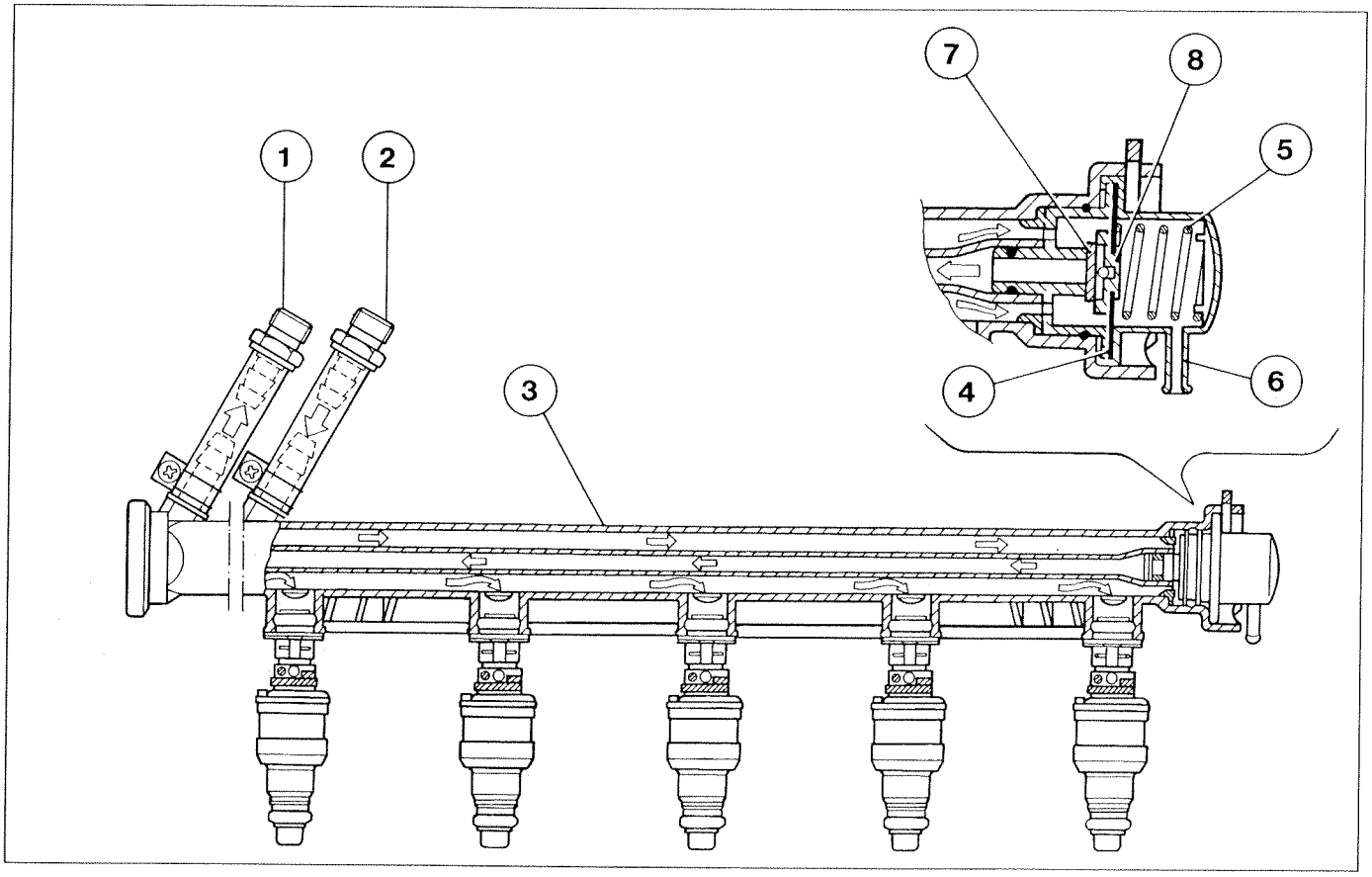

P3U24EW01

1. Fuel return connector
2. Fuel supply connector
3. Support for injectors and fuel manifold
4. Diaphragm with valve
5. Adjustment spring
6. Connection to the inlet manifold
7. Valve
8. Metal casing

INJECTORS (0.280.150.450)

The twin jet type injectors are fitted on the inlet manifolds, immediately before the inlet valves.
These injectors are specially designed for engines with 4 valves per cylinder, in effect making it possible to direct the jets towards the two inlet valves.

The jets of fuel at a differential pressure of 3 bar which come out of the injector are instantly atomized forming two cones of about 10° each.

The operation of the injectors is the «sequential, timed» type, i.e. the five injectors are operated according to the inlet sequence of the engine cylinders, whilst the supply can already start for each cylinder during the expansion sstroke until the inlet stroke has already begun.
The injectors are fixed by the fuel manifold, which presses them, into the seats in in the inlet ducts. They are also secured to the fuel manifold by means of «safety clips». Two rubber seals (10) and (11) ensure the seal on the inlet manifold and the fuel manifold.

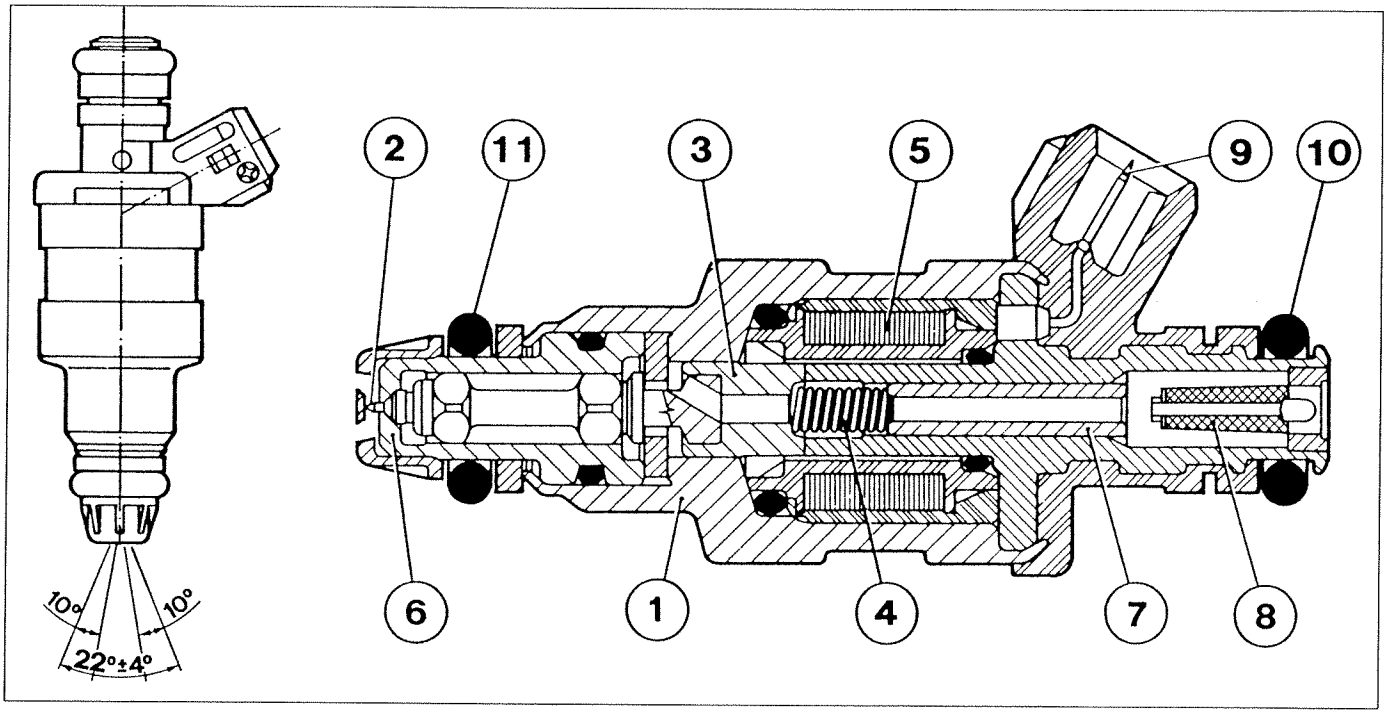

P3U25EW01

1. Injector body
2. Needle
3. Magnetic core
4. Coil spring
5. Winding
6. Injector nozzle
7. Spingi-molla registrabile
8. Filtro carburante
9. Presa collegamento elettrico
10. Anello di tenuta carburante
11. Anello di tenuta depressione

Wiring connector

NOTE *The numbers indicate the corresponding control unit pins arranged in the order of the cylinder numbers.*

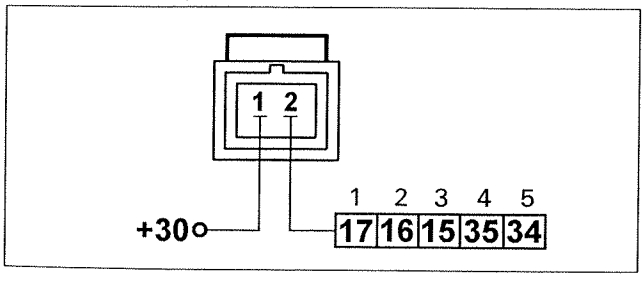

P3U25EW02

Checking resistance

The resistance of the injector can be measured by disconnecting the connector and connecting an ohmmeter as shown in the diagram.

Resistance value 16,2 ohm

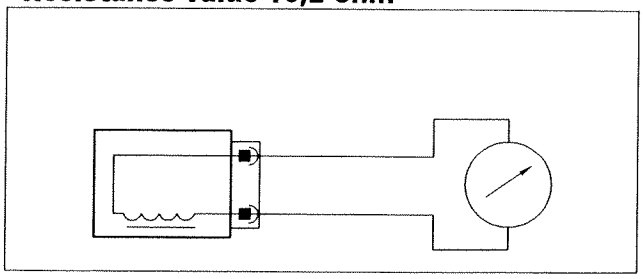

P3U25EW03

Copyright by Fiat Auto

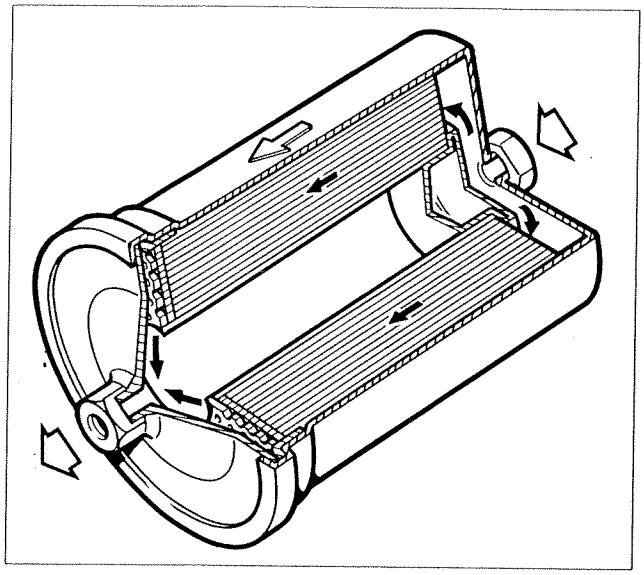

P3U26EW01

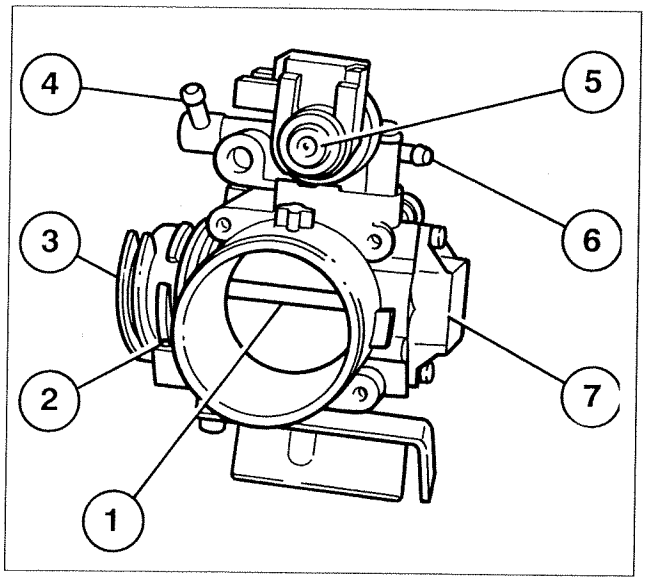

P3U26EW02

1. Butterfly valve
2. Butterfly valve adjustment and anti-tamper screw
3. Butterfly opening control levers
4. Attachment for engine coolant supply pipe
5. Engine idle speed actuator
6. Attachment for engine coolant return pipe
7. Butterfly valve position sensor

FUEL FILTER (0.450.905.231)

The filter is inserted in the fuel supply pipe; it is made up of a steel plated casing and an internal support which contains a high filtering capacity element.

NOTE *On the outer casing there is an arrow which indicates the direction of the fuel flow and allows it to be fitted correctly.*

BUTTERFLY CASING

The quantity of air drawn in is determined by the opening of the butterfly at the beginning of the inlet manifold. The butterfly casing is fixed to the inlet manifold by four bolts; the butterfly is operated by the accelerator pedal by means of levers which produce an opening system where small butterfly opening angles correspond to the pedal slightly depressed and viceversa larger opening angles correspond to the pedal very depressed.
The air required to support the engine whilst idling and with the butterfly valve closed, is regulated and by-passed by the engine idle speed actuator.
A special screw (1), allows the correct adjustment of the butterfly closure to avoid sticking with the surrounding duct; this screw is not used for adjusting the idle as it is adjusted by fluxing during production and should not be tampered with under any circumstances.
The engine coolant arriving from the thermostat passes through the inlet and outlet ducts (3) and (5) in the area of the butterfly valve and has the task of avoiding condensation and the formation of ice which could form in certain conditions when the outside temperatures are low and/or the humidity is high.
The gases which flow from the engine crankcase are drawn into the inlet manifold downstream of the butterfly through the PCV valve (4).

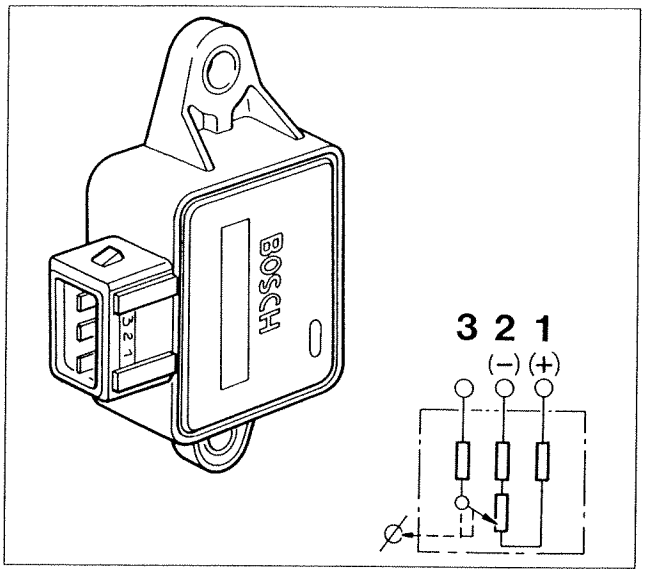

P3U27EW01

BUTTERFLY VALVE POSITION SENSOR (0.280.122.001)

This sensor is made up of a potentiometer fitted in a plastic container with two tabs which contain two NON SLOTTED openings which have the task of ensuring that the sensor is secured and position in relation to the butterfly valve. One socket with three pins on the container guarantees the electrical connection with the electronic control unit.

During operation, the injection/ignition control unit provides the potentiometer with a 5 Volt supply at pins (1) and (2).

The voltage at pin 3 is inversely proportional to the opening position of the butterfly valve. According to the voltage sent by pin 3, the control unit recognizes the butterfly valve opening condition and suitably corrects the mixture strength.

With the butterfly closed, an electric voltage signal of around 0.5 Volt reaches the control unit which recognizes the idle and cut off conditions (distinguishing them on the basis of the engine speed).

The potentiometer automatically recognizes the butterfly minimum end of travel position by means of an "auto-adjustment" function. This eliminates the adjustment operations and makes it possible to deal with any wear which occurs over a period of time for the butterfly valve closed position.

Recovery

If there is a fault with the sensor, the control unit establishes the following parameters:

Butterfly opening angle = 10°

idle state: air flow rate < 12,8 m^3/h;

exit from idle state: air flow rate > 8 m^3/h;

full load state: engine load > 6,5 ms and simultaneous revs > 2000 RPM;

exit from full load state: engine load < 6,5 ms or revs < 2000 RPM.

Additional provisions

The gradual decrease strategies for the engine idle speed (dashpot) and the idle auto-adjustment are stopped.

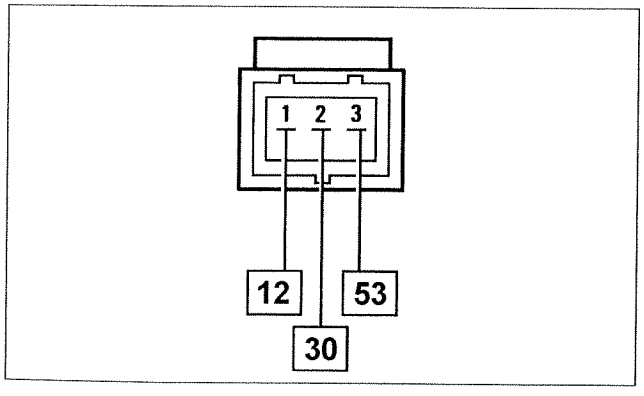

P3U27EW02

Wiring connector

NOTE *The numbers indicate the corresponding control unit pins*

Copyright by Fiat Auto

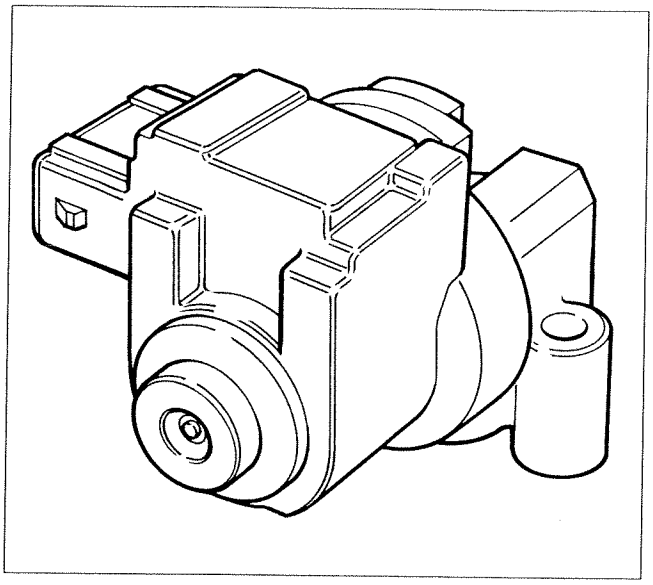

P3U28EW01

ENGINE IDLE SPEED ACTUATOR (0.280.140.553)

This is made up of an electric motor which, opening the flow of additional air to a greater or lesser extent (in parallel to the air flowing from the butterfly with the accelerator released) in the butterfly casing, automatically keeps the engine idle speed constant, irrespective of the load conditions (additional consumers switched on or not, engine hot or cold, etc.).
The opening of the passage created by the rotation of the distributor, is operated by electrical impulses processed by a special section of the injection control unit which makes the distributor rotate in one direction or another depending on the rpm at which the engine is rotating.

Recovery

If there is a fault with the actuator, the control unit activates different recovery strategies according to the butterfly valve opening angle.

Recovery 1: valve in recovery position, close to the idle air flow rate for:

- short circuit battery V at opening or closing winding;
- open circuit at opening or closing winding;
- short circuit battery V at opening winding and open circuit at opening winding
- short circuit battery V at closing winding and open circuit at opening winding.

Recovery 2: valve open 0% for:

- short circuit battery V at opening winding and short circuit to GND at closing winding;
- open circuit at opening winding and short circuit to GND at closing winding.

Recovery 3: valve open 50% for:

- short circuit to GND at opening or closing winding

Recovery 4: valve open 100% for:

- short circuit to battery V at closing winding and short circuit to GND at opening winding;
- open circuit at closing winding and short circuit to GND at opening circuit.

Additional provisions

Stopping of the auto-adjusting during idling at current values and stopping of the idle check.

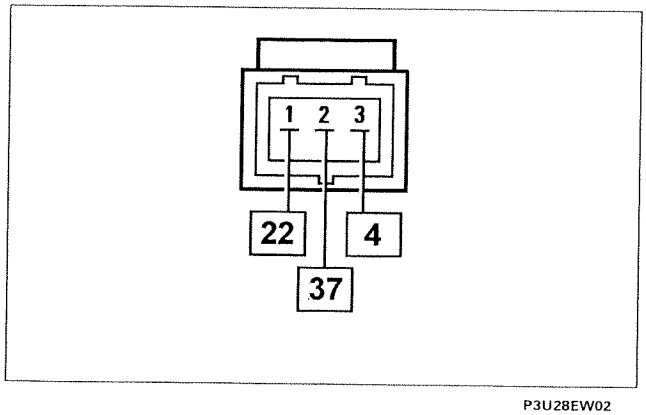

P3U28EW02

Wiring connector

NOTE *The numbers indicate the corresponding control unit pins.*

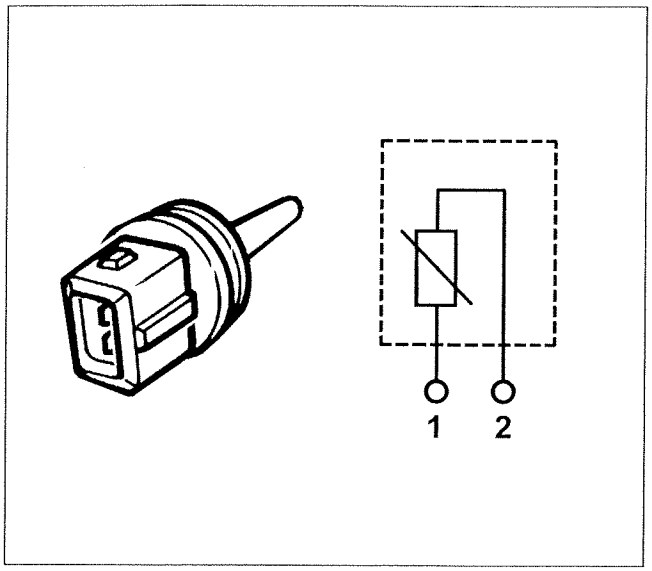

P3U29EW01

AIR TEMPERATURE SENSOR (0.280.130.060)

The intake air temperature sensor on this version is separated by the air flow meter: it is a normal NTC sensor (Negative Temperature Coefficient) whose electrical resistance decreases as the temperature increases.

Since the inlet circuit in the control unit is designed as a voltage divider, this voltage is divided between a resistance in the control unit and the sensor NTC resistance. As a result the control unit is capable of evaluating the resistance variations for the sensor through the changes in voltage and thereby obtaining information on the temperature.

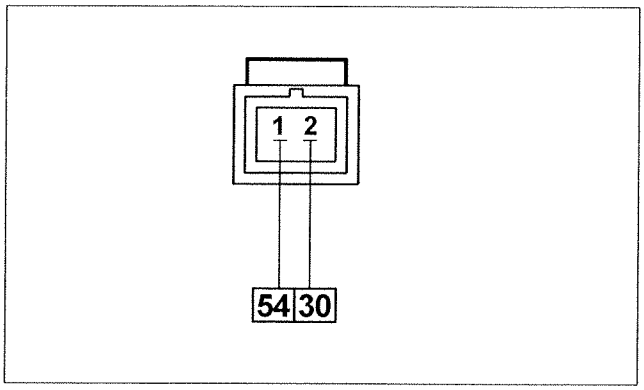

P3U29EW02

Recovery

If, 3 minutes after starting, the control unit detects a temperature (air T) of < -35 °C of > 130 °C for 30 seconds, it assumes air T as a fixed parameter = 20.4 °C

Additional provisions

Fixing the auto-adjustment of the mixture strength at current values.

Wiring connector

NOTE *The numbers indicate the corresponding control unit pins.*

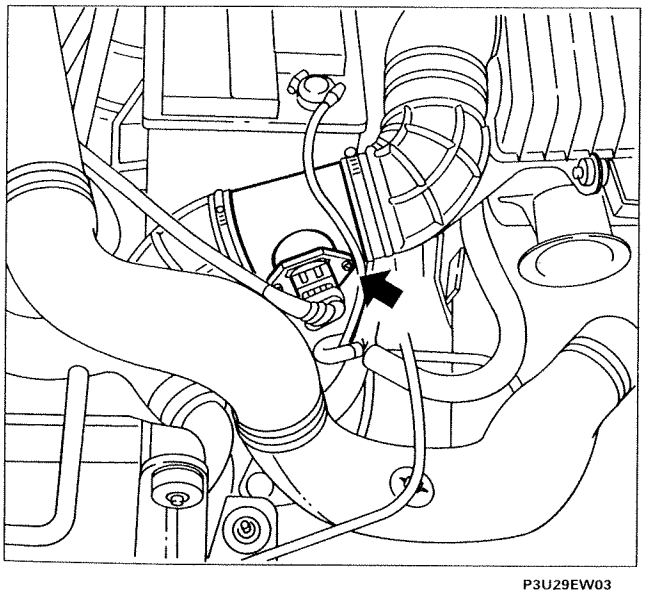

P3U29EW03

FLOW METER (0.280.217.514)

The air flow meter is the "heated film" type; the operating principle is based on a heated diaphragm which is positioned in a measuring duct through which the inlet air entering the engine flows.

The film diaphramg is kept at a constant temperature (~120 °C higher than the temperature of the air) by the heating resistance in contact with it.

The mass of air which passes through the measuring duct tends to detract head from the diphragm therefore, in order to keep the latter at a constant temperature, a certain current should flow through the heating resistance; this current is measured by a suitable Wheatstone bridge.

The current measured is therefore proportional to the mass of air.

Copyright by Fiat Auto

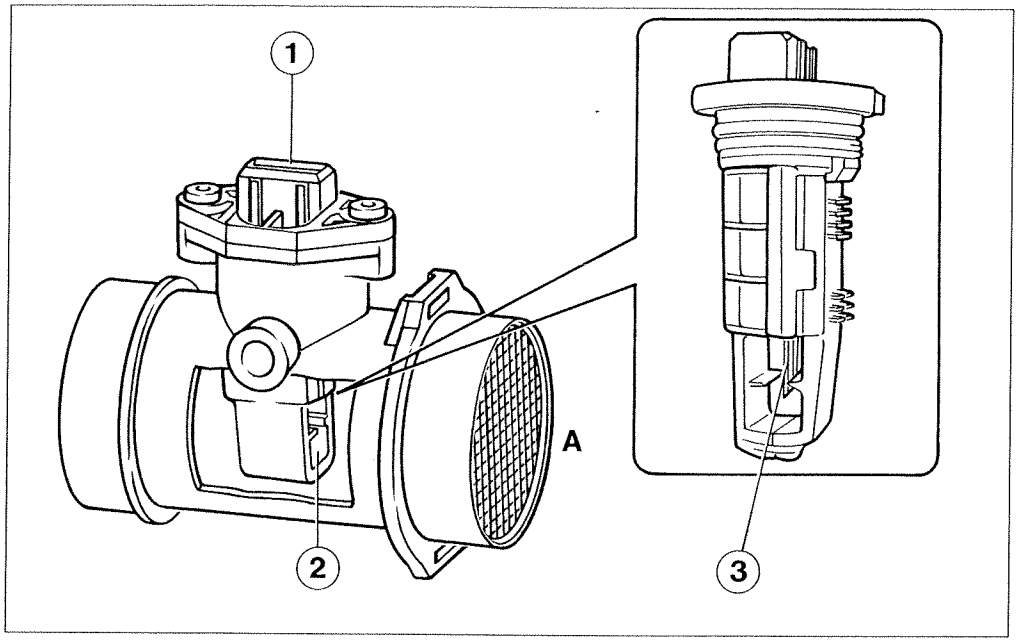

P3U30EW01

1. Connector
2. Measuring duct
3. Hot film sensor

A= Air inlet

NOTE *This flow meter directly measures the mass of air (and not the volume) thereby eliminating problems of temperature, altitude, pressure etc.*

Description of operation

The Wheatstone bridge (made up of R3, R2, Rs, Rt+R1) is in equilibrium when Rs is about 120 °C higher than the temperature of the air. The air which passes through the diaphragm removes heat from Rs, therefore the bridge is unbalanced. This situation is detected by the circuit at IC1 which operates the transistor T1, proportionally to the bridge imbalance, which, as a result, causes more current to pass through Rh to heat Rs and therefore restore the balance to the bridge. Circuit IC2 measures the current passing through Rh. This current makes it possible to keep the bridge in equilibrium and is therefore proportional to the mass of air passing through the air flow meter.

Recovery

If there is no error at the same time at the butterfly potentiometer, the engine idle load is calculated on the basis of the engine speed if the engine is idling, otherwise a fixed engine load figure is attributed. If there is an error at the same time at the butterfly potentiometer, the engine load and advance values are allocated by means of a table which depends on the number of revs.

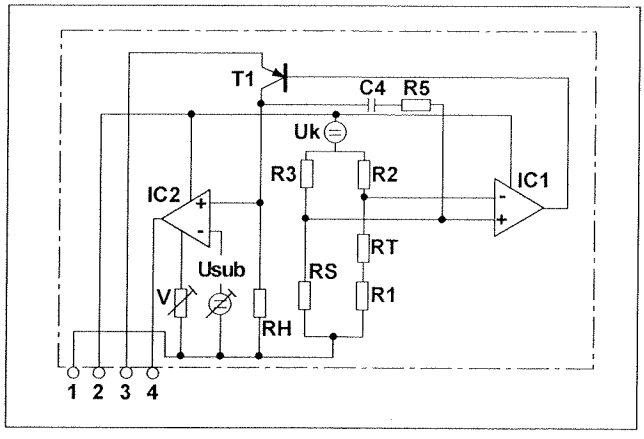

P3U30EW02

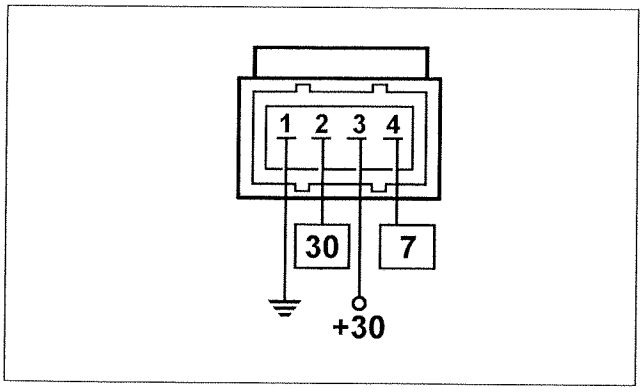

P3U30EW03

Additional provisions

Keeping the auto-adjustment of the mixture strength and idle at current values.

Wiring connector

NOTE *The numbers indicate the corresponding control unit pins.*

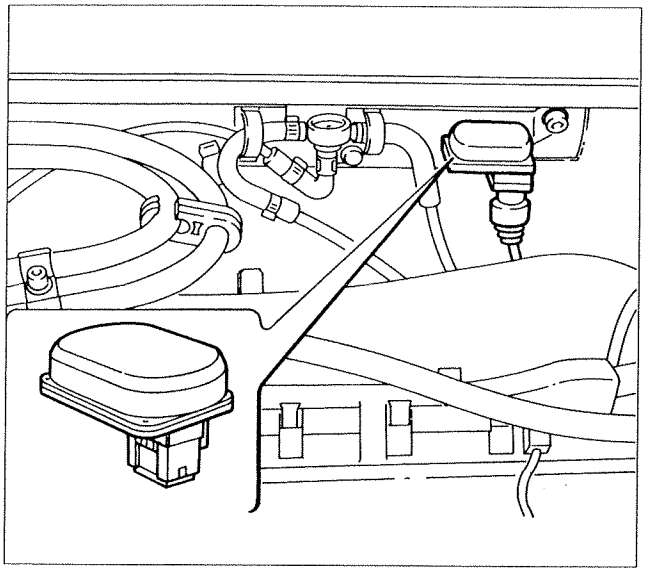

P3U31EW01

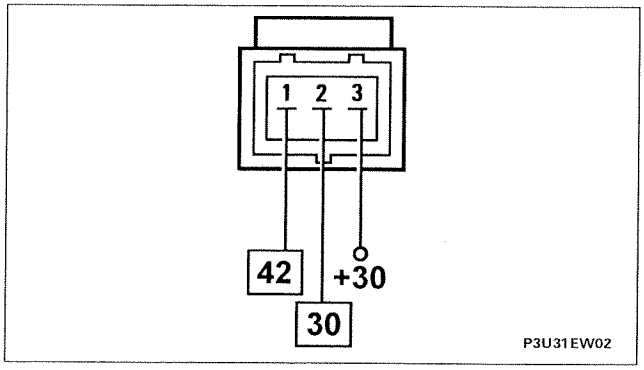

P3U31EW02

ATMOSPHERIC PRESSURE SENSOR (barometric capsule) (0.280.101.001)

The atmospheric pressure sensor has the function of informing the injection/ignition electronic control unit of the changing barometric pressure conditions whilst the vehicle is in use.

This information is used to limit the turbocharger supercharging pressure at high altitudes.

This strategy is necessary to safeguard dangerous turbocharger speeds because when the air is rarefied at altitude an excessive request for performance by the driver would force the turbine to a speed which is too high before the required supercharging pressure is reached.

Wiring connector

NOTE *The numbers indicate the corresponding control unit pins*

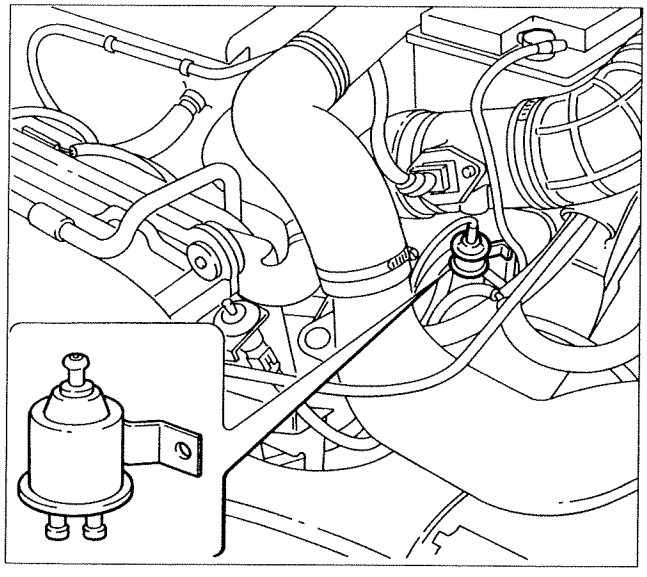

P3U31EW03

SUPERCHARGING PRESSURE SOLENOID VALVE (PIERBURG) (7.21493.00)

This solenoid valve, permanently operated by the injection/ignition control unit, directly and constantly manages the supercharging pressure according to the engine speed and the position of the butterfly valve.

In addition the control unit is capable of correcting the pressure values if further factors such as intake air temperature, detonation and barometric pressure are present.

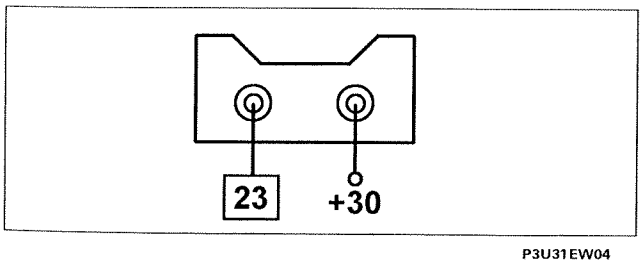

P3U31EW04

Wiring connector

NOTE *The numbers indicate the corresponding control unit pins*

Copyright by Fiat Auto

Diagram showing connection of supercharing pressure solenoid valve

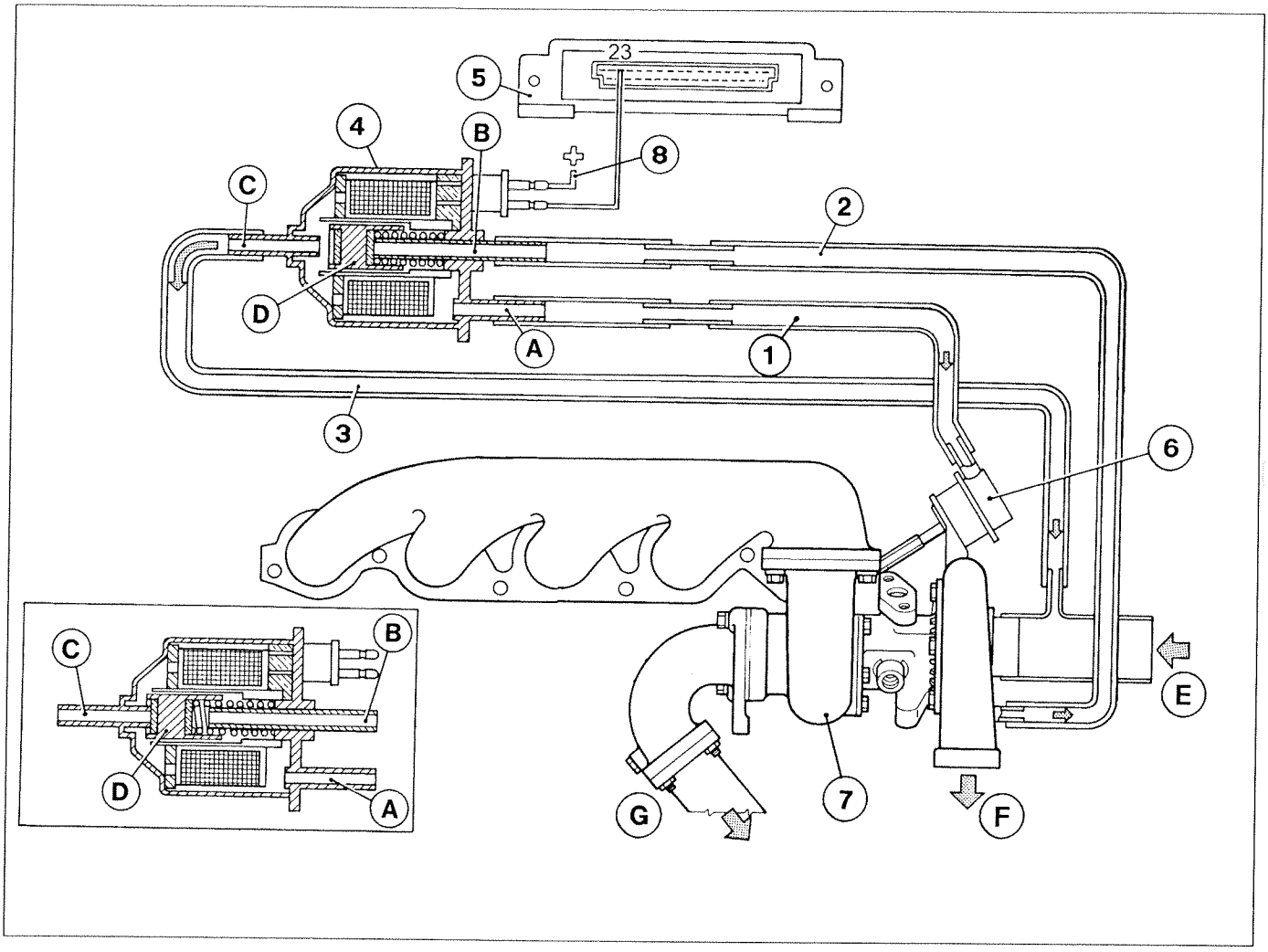

P3U32EW01

A - Connecting duct between hose and waste gate valve.
B - Connecting duct between hose and turbocharger, supercharging side.
C - Connecting duct between hose and turbocharger, inlet side.
D - Cylinder
E - From the inlet filter
F - To the heat exchanger
G - To the gas exhaust

1. Connecting hose
2. Connecting hose
3. Connecting hose
4. Three-way solenoid valve (in open condition in the diagram and closed in the inset)
5. Electronic control unit
6. Waste gate valve
7. Turbocharger
8. To the injection/ignition system relay

Operation

The supercharging is ensured by the turbocharger (7) with the supercharging pressure controlled by means of a three-way Pierburg solenoid valve (4) (A.B.C.) with a 12V supply from the injection system relay, permanently managed by the injection/ignition electronic control unit (5) via pin (23).
The duct (A) is connected by the hose (1) to the waste gate valve actuator (6).
The duct (B) is connected to the turbocharger (7) excess pressure duct via the hose (2).

Duct (C) is connected by the hose (3) to the turbocharger inlet manifold.

- When the solenoid valve (4) is not activated by the control unit (5), the cylinder (D) closes the duct (C), leaving ducts (A) and (B) in contact as a result of which the excess supply pressure arriving from duct (B) acts on the waste gate actuator (6). In this way the excess supply pressure is only regulated by the waste gate valve mechanical setting.
- When the solenoid valve (4) is activated by the electronic control unit (5) the cylinder (D), magnetized by the coil winding, starts to pulse, operated by a duty cycle signal; in this way it opens duct (C) for varying lengths of time. These opening times vary according to curves memorized in the control unit which take into account the pressure in the inlet manifold, the engine revs and the position of the butterfly valve.
- The opening of duct C) makes it possible, through the hose (3), to discharge part of the pressure which was formerly acting on the waste gate valve actuator (6) in the turbocharger inlet manifold (7) thereby increasing the supercharing pressure.

NOTE *Ducts A and B of the three-way solenoid valve are marked with blue coloured paint for duct A and red for duct B.*

In case of service operations on this device, take great care over the correct fitting, i.e.:
- *duct A (blue mark) should be connected to the actuator (6);*
- *duct B (red mark) should be connected to the turbocharger excess pressure valve.*

PHASE TRANSFORMER

In order to achieve a good compromise between high performance in terms of power at high engine speeds and good torque at low speeds, this engine is equipped with an (electronically controlled and hydraulically operated) phase transformer for the inlet camshaft.

This device makes it possible to alter the timing diagram (inlet stroke) according to the engine load required; this parameter is processed by the MOTRONIC control unit on the basisof the electrical signals received from the air flow meter and the rpm sensor and is sent as a command to the phase transformer solenoid valve.

The construction of the device consists of a main assembly on the inlet camshaft which has the task of altering the angular position of the shaft in relation to the drive pulley.

In addition there is an implementation valve, controlled by a solenoid, both located on the inlet manifold and hydraulically connected to the main assembly by means of appropriate ducts.

The operating principle is as follows:

- with the temperature of the coolant below 40 °C and when the engine is idling or the speed exceeds 4800 rpm, the solenoid (1) is de-energized, therefore the valve body (2), thrust by the opposing spring (3), remains raised not allowing the oil, arriving from duct (A), to reach the transformer.

  In this case the inlet valve timing remains unalatered.
  With the coolant temperature above 40 °C and the engine speed above idling and below 4800 rpm with the butterfly angle greater than about 8°, the solenoid (1) is energized, pushing the valve body (2) downwards. In this position the oil, coming from duct (A), enters the piston chamber (B) and from there, through a special port, duct (C) inside the latter.

  The oil can only leave the above duct through the upper port (in contact with duct (D) supplying oil to the transformer) because, with the valve body (2) lowered, the lower port is not in contact with the drainage duct (E).
  Through ducts (D) and (F), the oil reaches chamber (G), moving the piston (4), axially towards the engine; because the piston has outer helical teeth, as a result of the above axial movement, it rotates in a clockwise direction (as seen from the timing side).
  This rotation is transmitted, by means of a straight toothed splined profile, to the pinion (5) which, bolted onto the threaded end of the camshaft (6), transmits the rotation to the shaft, thereby altering the inlet valve timing by a 9° advance.

When the solenoid is de-energized, the valve body (2) returns to the original position, interrupting the flow of oil under pressure to chamber (G), but allowing the return of oil to the drain, thanks to the force of the opposing spring (7).

An additional duct ensures the lubrication of the camshaft bearing even when the device is not activated.

The oil which reaches chamber (H) of the solenoid valve is drained through drainage duct (E).

Recovery

If the solenoid valve fails, the final stage (driver) in the control unit is deactivated.

Diagram showing operation of the phase transformer

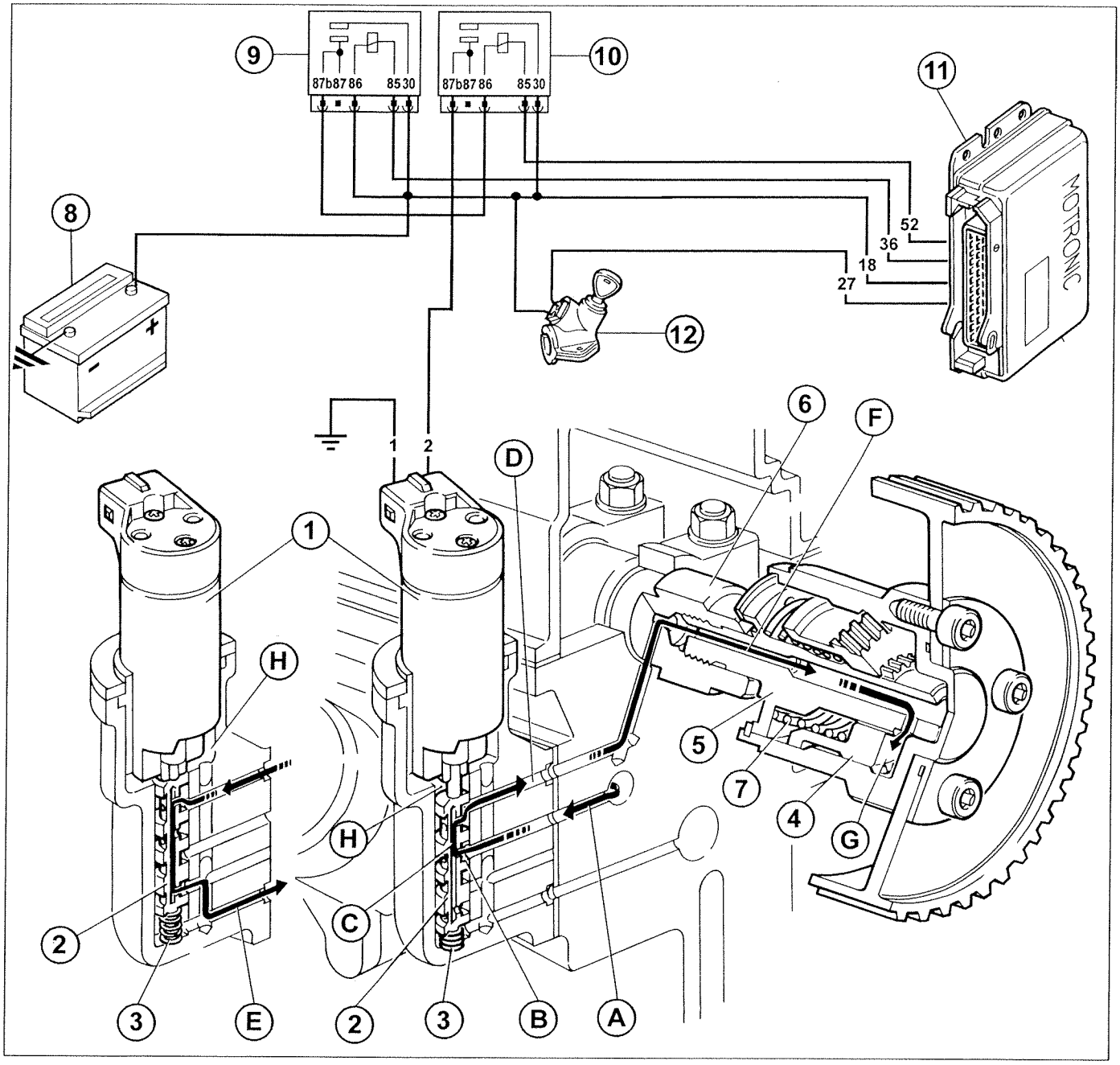

P3U35EW01

1. Electro-magnet
2. Valve body
3. Valve body spring
4. Piston
5. Pinion
6. Camshaft element
7. Piston spring
8. Battery
9. Injection/ignition system relay
10. Phase transformer solenoid valve relay feed
11. Injection/ignition control unit
12. Ignition switch

Copyright by Fiat Auto

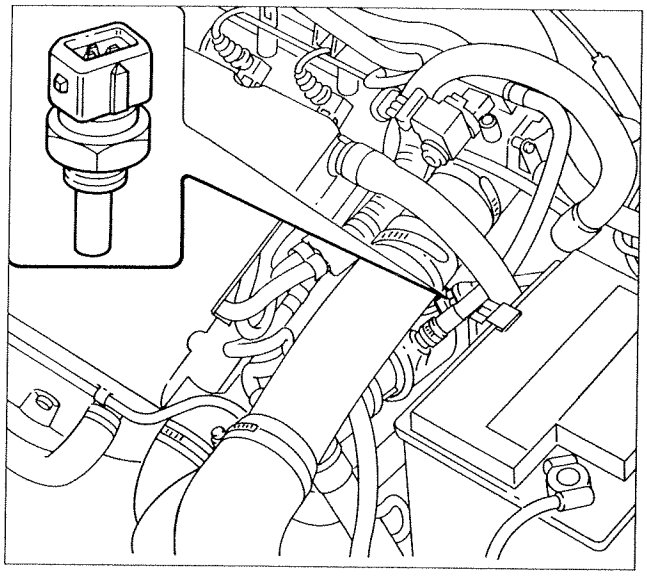

P3U35EW01

COOLANT TEMPERATURE SENSOR (0.280.130.055)

This sensor is fitted near the themostat casing with the sensitive element in contact with the coolant. It is made up of a brass casing which protects the actual resistive element which comprises an NTC type «thermistor» (Negative Temperature Coefficient, where the electrical resistance of the sensor decreases as the temperature increases).

It provides the control unit with a voltage which varies according to the temperature of the engine so that it can correct the air flow rate information from the air flow meter so that, on the basis of the signal received from the sensor, the control unit can operate the fuel injection for a longer time, enriching the mixture when necessary when the engine is operating at lower temperatures.

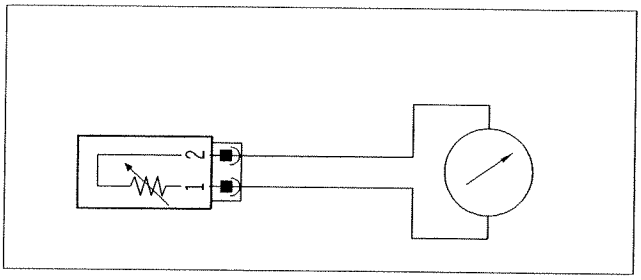

P3U35EW02

Checking resistance

The graph shows the progress of the sensor resistance which can be measured by by disconnecting the connector and connecting an ohmmeter as shown in the diagram at the side.

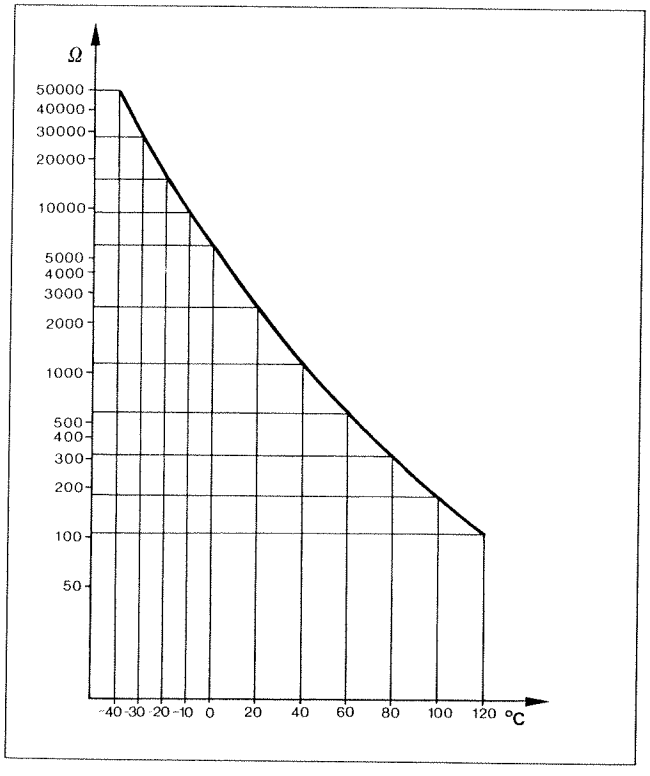

P3U35EW03

Recovery

If T air ⩽ 19.9 °C, T engine is assumed = T air for three minutes, then T engine is assumed = 80 °C. If T air ⩾ 19.9 °C, T engine = 80 °C immediately.

Additional provisions

Keeping the auto-adjustment of the mixture strength and idling at current values.

Wiring connector

The numbers indicate the corresponding control unit pins

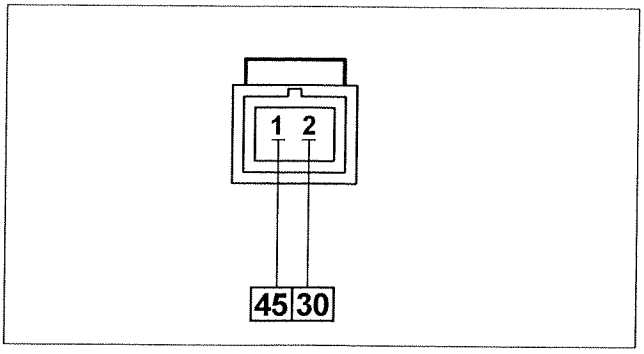

P3U36EW04

INERTIA SAFETY SWITCH

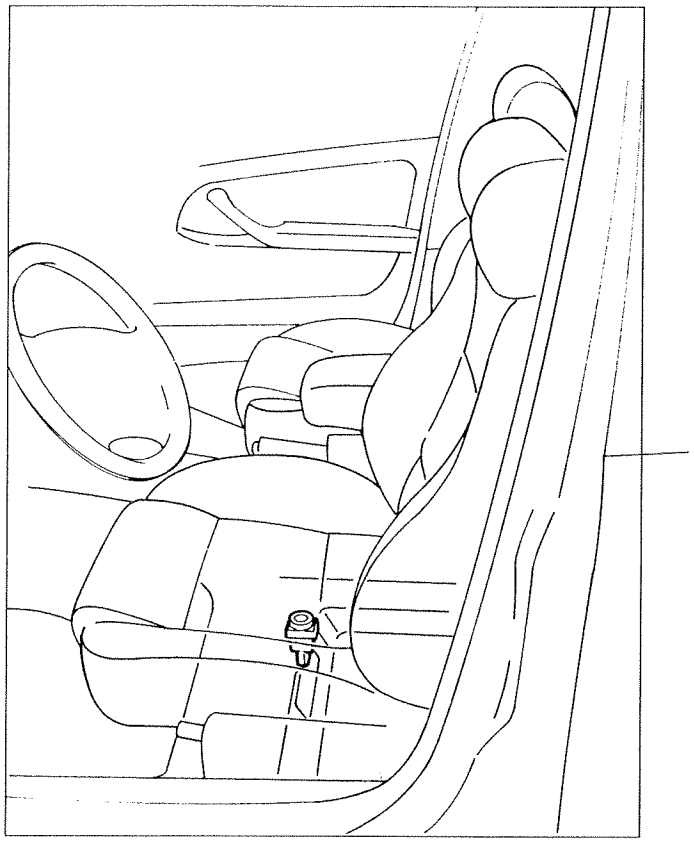

P3U37EW01

In order to improve the safety of the occupants of the vehicle in the case of an impact, the vehicle is fitted with an inertia switch located inside the passenger compartment, under the driver's seat on the right hand side.
This sensor reduces the risk of fire (as a result of fuel escaping from the injection system) de-activating the electric pump which supplies the injection circuit.
The switch is made up of a steel ball fitted in a (conical shaped) housing and is kept in position through the attraction force of a permanent magnet.
If the vehicle suffers a violent impact, the ball is released by the magnetic clip and the normally closed (N.C.) circuit is opened interrupting the connection to earth of the electric fuel pump and consequently the supply to the injection system.
To restore the connection to earth of the electric pump, the seat must be moved backwards and the switch pressed until it is heard to click.

After even an apparently slight impact, if there is a smell of fuel or there are leaks in the fuel system, do not turn the switch back on, but search for the fault first and remedy it to avoid the risk of fire.

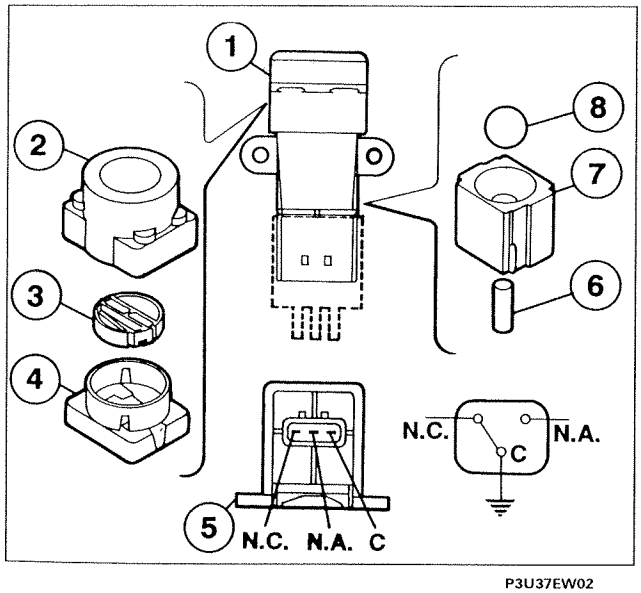

P3U37EW02

Inertia switch components

1. Complete inertia sensor
2. Outer casing
3. Button
4. Upper side
5. Engagement side
6. Permanent magnet
7. Permanent magnet housing
8. Steel ball

C= Joint terminal
N.C. Normally closed
N.A. Normally open

Copyright by Fiat Auto

LAMBDA SENSOR (0.258.003.579)

This sensor measures the oxygen content in the exhaust gases.

The sensor output signal is sent to the electronic control unit to adjust the air/petrol mixture in order to keep the stoichiometric ratio as close as possible to the theoretical value.

In order to obtain an optimum mixture it is therefore necessary for the quantity of fuel injected to be as close as possible to the theoretical quantity required to be completely burnt in relation to the quantity of air drawn in by the engine.

It is said that in this case the Lambda factor (λ) is equal to 1; in effect:

$$\lambda = \frac{\text{QUANTITY OF INTAKE AIR}}{\text{THEORETICAL QUANTITY OF AIR REQUIRED TO BURN ALL THE FUEL INJECTED}}$$

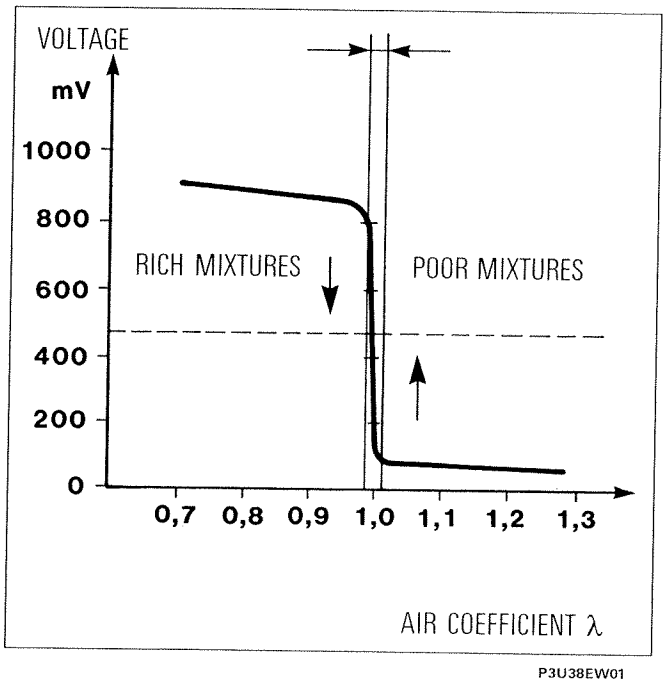

$\lambda = 1$ Ideal mixture
The CO is within the legal limits

$\lambda \geqslant 1$ Lean mixture
Excess air; the CO values tend to be low

$\lambda \leqslant 1$ Richmixture
Lack of air; the CO values tend to be high

NOTE *Whilst the coefficient λ expresses the excess or deficient air supplied to the engine in relation to the theoretical requirement, the air/petrol mixture is a ratio between these two substances which, combined together, react chemically. In modern engines 14.7-14.8 parts of air are needed to burn 1 part of petrol.*

The sensor is fixed upstream of the catalyzer.

It is made up of a ceramic casing (1), with a zirconium dioxide base, covered in a thin layer of platinum, closed at one end and inserted in a protective tube (2); it is housed in a metal casing (3) which affords further protection and allows it to be fitted on the exhaust manifold. The outer part (B) of the ceramic casing is exposed to the current of exhaust gases, whilst the inner part (A) is in contact with the ambient air.

The operation of the sensor is based on the fact that, at temperatures above 300 °C, the ceramic material used becomes a conductor of the oxygen ions. Under these circumstances, if the quantity of oxygen at the two sides (A and B) of the sensor is in differing percentages, a variation in voltage is produced between the two ends which is an index for measuring the difference in the quantity of oxygen in the two ambients (air side and exhaust gas side).

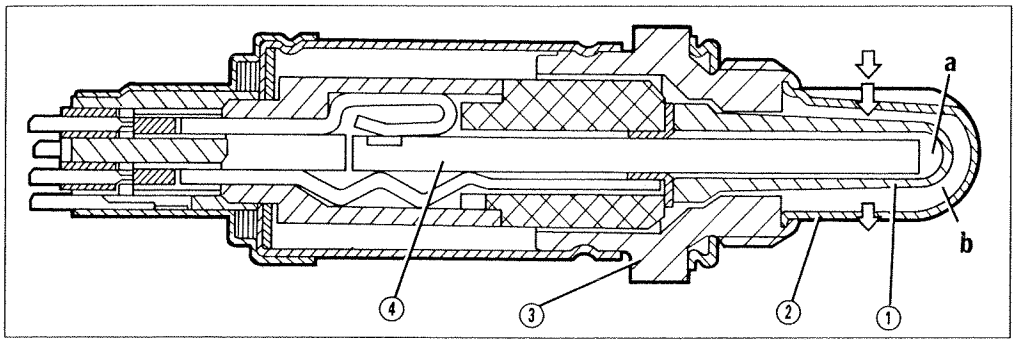

P3U39EW01

a. Electrode (+) in contact with the outside air
b. Electrode (-) in contact with the exhaust gases
1. Ceramic casing
2. Protective tube
3. Metal casing
4. Electrical resistance

When the sensor provides a low voltage level (lower 200 mV) the control unit recognizes that the mixture strength is lean (Lambda > 1) and increases the quantity of fuel injected. When the sensor provides a high voltage level (above 800 mV) the control unit recognizes that the mixture strenght is grease (Lambda < 1) and decreases the quantity of fuel injected.

The Lambda sensor varies the injection times so that the engine operates with a Lambda coefficient constantly oscillating between around 0.980 and 1.020.

At temperatures below 300° C, the ceramic material is not activated, therefore the sensor does not send signals which can be used and a special circuit, in the control unit, keeps the adjustment of the mixture strength in closed loop conditions whilst the sensor is warmin up.

To ensure that operating temperature is reached quickly, the sensor is fitted with an electrical resistance (4) supplied by the battery.

The sensor can be rapidly put out of action by the presence of even slight amounts of lead in the petrol.

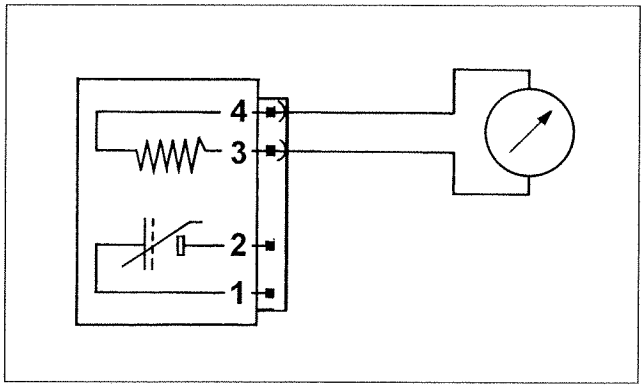

P3U39EW02

Checking resistance

The resistance of the heater and the sensor can be measured by disconnecting the connector and connecting an ohmmeter as shown in the diagram.

Heater resistance = 4,3 ÷ 4,7 ohm

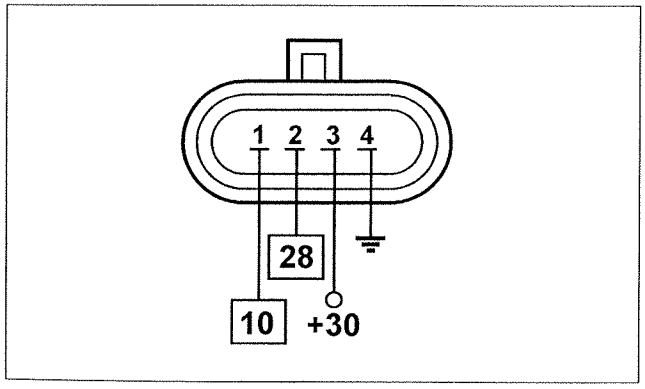

P3U39EW03

Wiring connector

The numbers indicate the corresponding control unit pins.

Copyright by Fiat Auto

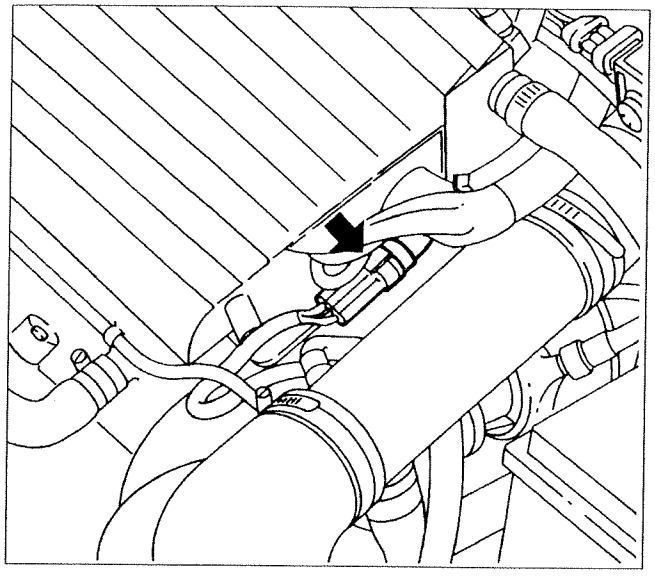

P3U40EW01

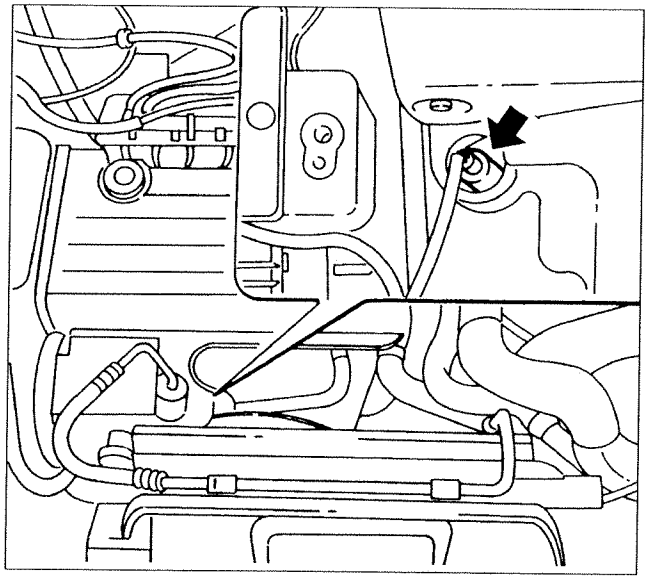

P3U40EW02

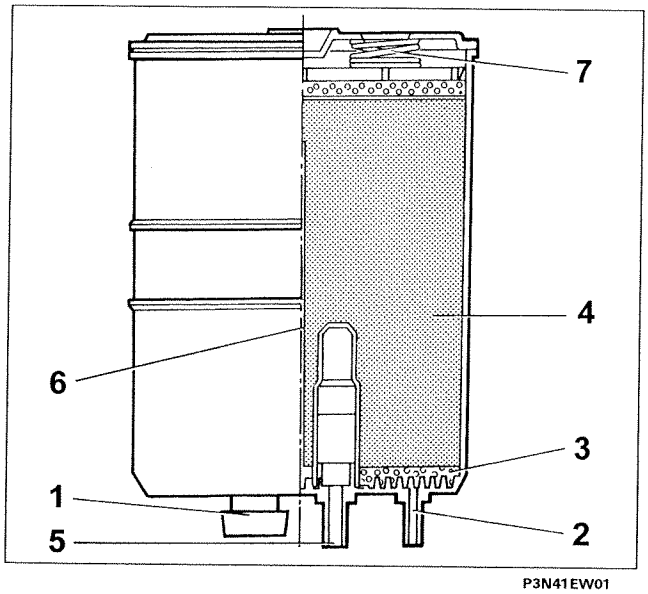

P3N41EW01

Removing-refitting

- Disconnect the negative lead from the battery.
- Disconnect the electrical connection to the side of the cylinder head.
- Remove the Lambda sensor from its housing.
- When tightening, do not exert force on the component in order not to damage it irreparably.

If the Lambda sensor is being replaced, when refitting, apply anti-seizing graphite grease to the thread (e.g. Bosch VS 14016- FT).

Tightening torque 5 ÷ 6 daNm

Recovery

The Lambda data is ignored (open loop) for sensor voltages > 1,099 V or between 0,400 and 0,518 V for more than 2,55 s.

Keeping auto-adjust. of mix. strength for sensor volt. < 0,0879 V for more than 2,55 s.

Open loop and considered the maximum Lambda integrator value (FR) the last good reading for the sensor voltage < 0,0879 V and simultaneously FR=1,4.

Keeping FR at the limit reached for FR > 1,25 or < 0,75 for at least 15 s.

ACTIVE CHARCOAL FILTER

This is made up of charcoal granules (4) which trap the petrol vapours entering through the inlet (5).

The scavenging air which enters the inlet (1), passess through the paper filter (3), comes into contact with the charcoal granules which remove the petrol vapours and convey them towards the outlet (2) and from there to the cut out valve.

The air, having entered through the inlet (5), can be recalled by the vacuum in the tank to ventilate it.

The partition (6) ensures that the hot scavenging air drawn in comes into contact with all the granules of charcoal assisting the release of petrol vapours towards the inlet manifold.

There are also two springs (7) which allow the expansion of the mass of granules when the pressure increases.

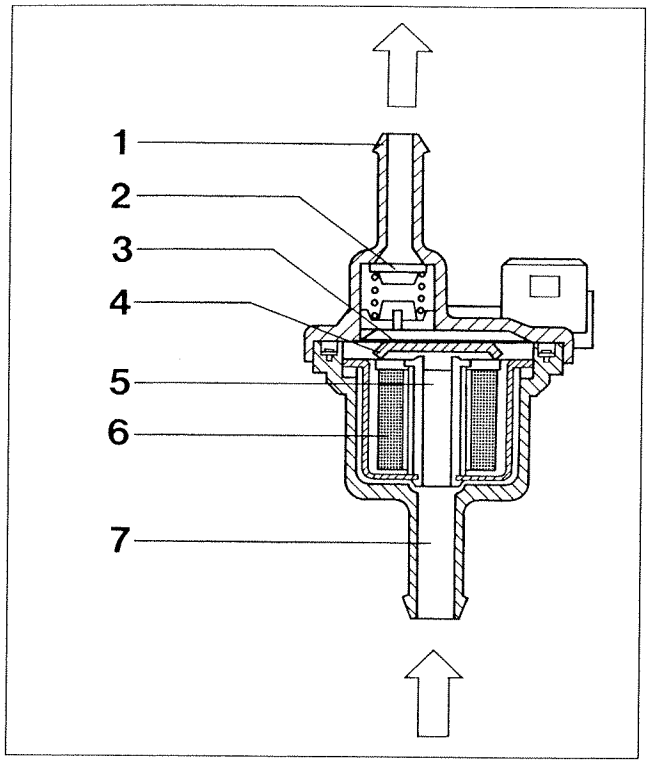

P3U41EW02

1. Inlet connector (from the active charcoal filter)
2. One-way valve
3. Spring
4. Shutter
5. Outlet port
6. Solenoid valve
7. Outlet union (towards the inlet manifold)

FUEL VAPOUR CUT OUT SOLENOID VALVE

The function of this valve is to control the quantity of petrol vapours drawn in by the active charcoal filter and directed to the inlet manifold by means of the electronic control unit.
If this valve is not supplied, it is in the open position; when the key is in the ON position, it closes, preparing for operation. In effect, if energized, the solenoid valve (6) attracts the shutter (4) which, overcoming the spring (3) loading, closes the opening (5) preventing the flow of petrol vapours.
The operation is controlled by the electronic control unit as follwos:

- during starting the solenoid valve remains closed, preventing the petrol vapours from enriching the mixture excessively;
- with the engine started up, the electronic control unit sends the solenoid valve a signal which modulates the opening according to the signal full/empty ratio.

In this way the control unit controls the quantity of the petrol vapours sent to the inlet, preventing substantial variations (above all during idling) in the mixture strength.

NOTE *The solenoid valve must be fitted in the correct position: the arrow on its casing should be positioned pointing towards the vacuum inlet on the inlet manifold.*

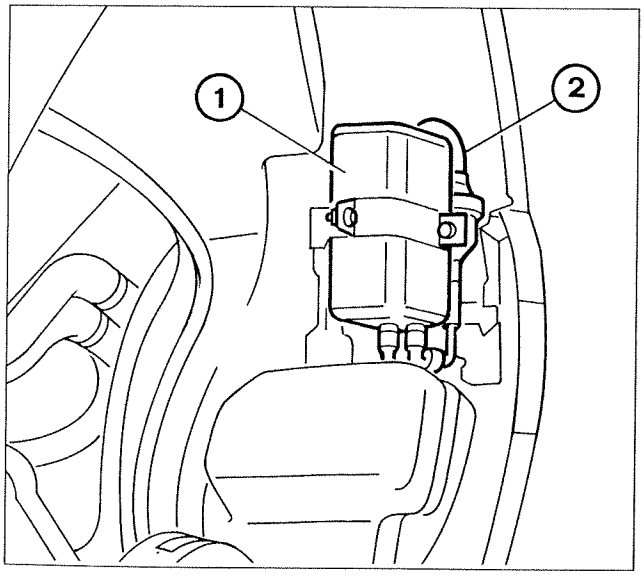

P3U41EW03

REMOVING-REFITTING ACTIVE CHARCOAL FILTER AND FUEL VAPOUR CUT OUT SOLENOID VALVE

The procedure is valid for both the active charcoal filter (1) and the solenoid valve (2).

- Raise the vehicle;
- remove the right front wheel;
- remove the right front wheel arch liner;
- extract the filter and the solenoid valve from the housing, separate them and remove the electrical connection and the pipes connected to them.

Copyright by Fiat Auto

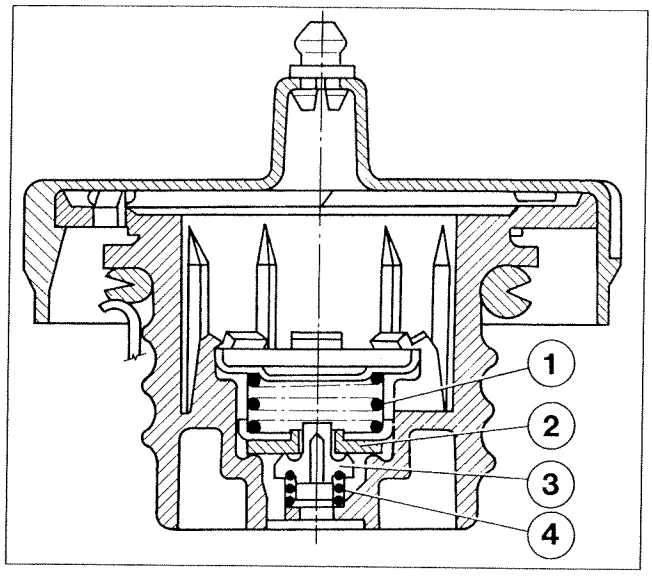

P3U42EW01

SAFETY AND VENTILATION VALVE

This valve is located in the fuel filler cap and, depending on the pressure in the tank, it carries out the following functions:

- discharging the excess pressure which forms inside the tank outwards (safety function); the pressure acts on the shim (2) and, overcoming the spring (1) loading, allows the excess vapours to be discharged outwards.
- Allowing the flow of outside air into the tank when the vacuum inside it is too great as a result of the effect of the fuel consumption (ventilation function). In this case, when the vacuum overcomes the spring (4) loading, the valve (3) is moved allowing the intake of air.

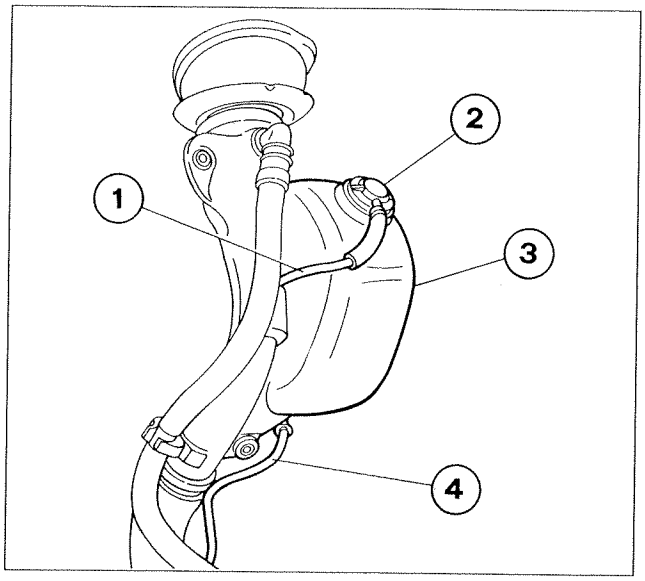

P3U42EW02

FUEL VAPOUR SEPARATOR (EXPANSION TANK)

The fuel vapours coming from the tank reach the vapour separator (3), positioned at the side of the fuel filler, through the pipe (4).

Part of the vapours condense and return to the tank via the same pipe (4), whilst the remaining vapours leave the separator through the multi-purpose valve (2) and are directed to the active charcoal filter via the pipe (1).

1. Pipe connecting fuel vapour separator to active charcoal filter
2. Multi-purpose valve
3. Fuel vapour separator
4. Pipe connecting vapour separator to fuel tank

MULTI-PURPOSE VALVE

This valve is used for carrying out different functions, namely:
- preventing the flow of liquid fuel when the tank is too full or if there is an accident and the vehicle overturns;
- allowing the breathing of petrol vapoursto the active charcoal filter;
- allowing the ventilation of the tank if there is a vacuum inside.

The valve is made up of a float (2), a heavy ball (3), a shim (4) kept in contact with the valve body (5) and a shim (8) kept in contact with the valve (9) shim (4). The operation of the multi-purpose valve can be summarized in the following cases, depending on how full the fuel tank is:

a. if the tank is full, the float (2) shutters the opening (1) preventing the liquid fuel from reaching the active charcoal filter avoiding damage;

b. if the level of the fuel in the tank decreases, the float (2) descends and rests on the ball (3) opening the port (1); when the pressure exerted by the petrol vapours on the shim (4) overcomes the spring (5) loading, a ring section opens between the actual shim and the valve body which allows the petrol vapours to leave via the duct (6) and reach the active charcoal filter.

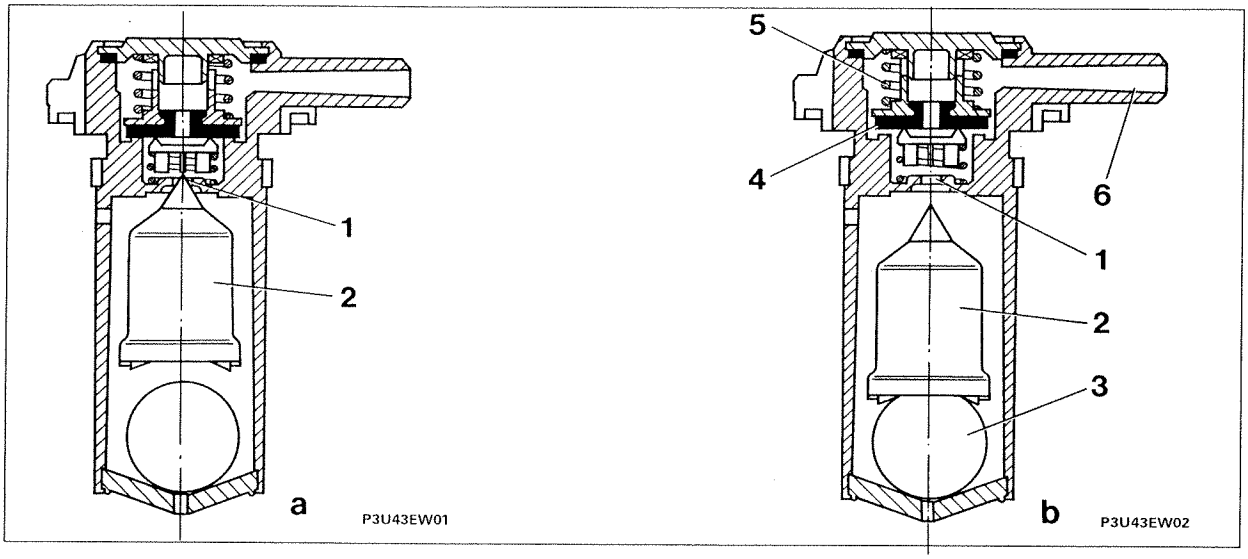

c. if the reduction in the level of the fuel in the tank is such that a vacuum is produced, it acts on the shim (8) and, overcoming the spring (9) loading moves the valve downwards allowing the ventilation of the tank through the port (7);

d. if the vehicle overturns, irrespective of how full the tank is, the ball (3), weighing on the float (2), pushes it against the port (1) preventing the dangerous flow of petrol to the inlet manifold with the consequent risk of fire.

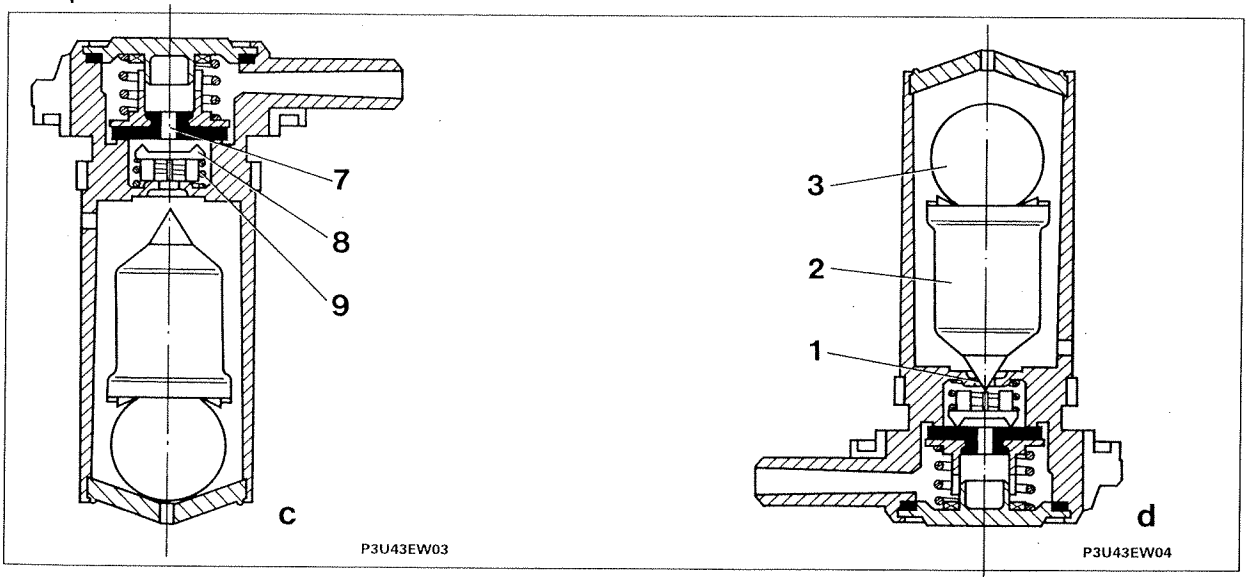

Copyright by Fiat Auto

SIEMENS FUEL VAPOUR RECIRCULATION VALVE

Introduction

The function of this valve is to allow the recirculation of the vapours and consequently the scavenging of the active charcoal when the (Bosch) vapour solenoid valve is inhibited and the inlet manifold is pressurized.

Operation

The valve is connected at three points by means of pipes.

Duct (A) is connected by means of a T connector to the active charcoal filter; duct (B) is connected to the turbocharger inlet manifold; duct (C) is connected to the engine inlet manifold.

The pressure which forms in the inlet manifold reaches the valve via duct (C).

When this pressure exceeds a certain value (added to the vacuum which, in turn, forms in duct (B) connected to the turbocharger inlet manifold) it acts on the diaphragm valve (D), placing duct (A) in contact with duct (B).

Therefore the petrol vapours which reach the valve from duct (A) can be drawn in through the turbocharger duct (B).

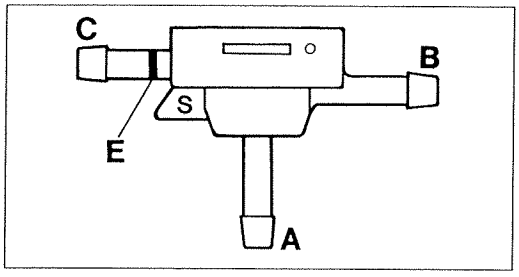

P3U44EW01

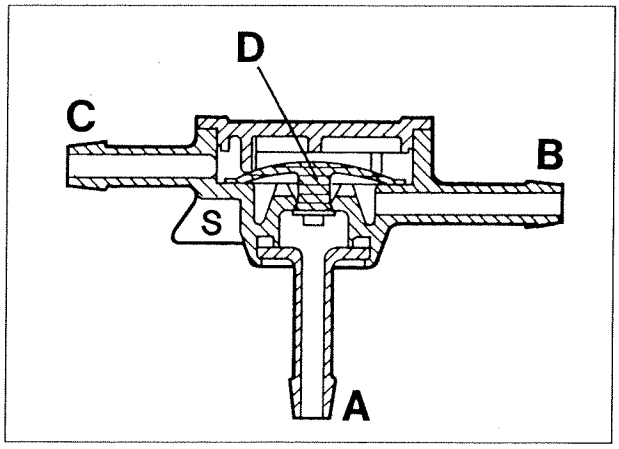

P3U44EW02

A - To the three-way connector (charcoal filter)
B - To the turbocharger inlet manifold
C - To the inlet manifold
D - Diaphragm valve
E - Paint section for fitting reference

AIR/AIR HEAT EXCHANGER (INTERCOOLER)

The heat exchanger between the compressor and the inlet manifold is designed to cool the air drawn into the cylinders so that its weight increases and the power developed by the engine during combustion is greater.

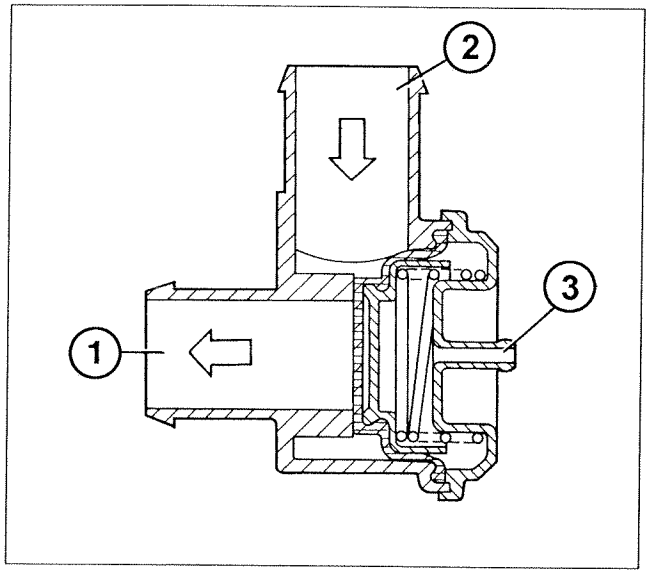

P3U45EW01

MECHANICAL BY-PASS VALVE (0.280.142.102)

There is a by-pass valve, between the low pressure (inlet) turbocharger pipe and the high pressure inlet pipe for the butterfly casing, which is controlled by the pressure in the inlet manifold and has the task of reducing the delay for the response of the turbocharger in accelerator shifts (also refer to the air circuit diagram).

1. Side connected to the turbine inlet pipe (vacuum)
2. Side connected to the inlet pipe at the butterfly casing (pressure)
3. Side connected to the inlet manifold

When the butterfly is completely closed, for example during deceleration, even for just a gear change, the counter-pressure exerted on the compressor impeller, could cause it to slow down and, consequently, there would be a long delay in the response to re-open the butterfly (turbo-lag) due to the time required by the impeller to return to the optimum speed.
In order to limit this problem, the by-pass valve opens as soon as there is a decrease in pressure inside the inlet manifold discharging the excess pressure upstream of the compressor: in this way the impeller speed is maintained and it is ready for the subsequent acceleration stage.

TURBOCHARGER

The turbocharger used to supercharge the engine is the Garrett TB28 type; it is basically made up of two impellers fitted on the same shaft.

One impeller, known as the turbine, is fitted on the exhaust manifold and is moved by the kinetic force and pressure of the exhaust gases which are directly towards it.

The turbine, caused to rotate by the gases, moves the other impeller, known as the compressor, on the inlet manifold, at the same speed.

Thanks to the rotation speed and the special shape of its vanes, the compressor draws in outside air and compresses it in the inlet manifold and in each engine cylinder.

MAIN PRECAUTIONS TO BE OBSERVED FOR THE CORRECT USE OF THE ENGINE WITH THE TURBOCHARGER

- *Never let the engine run without an air filter fitted. This could damage the turbocharger, given the high levels of energy which even the smallest foreign body drawn in would acquire.*
- *Never switch off the engine at average - high speeds before the speed returns to idling. In effect, the engine would stop too quickly before the turbine so that it would remain not lubricated for a certain period which would damage it. In addition, after the engine has been used for "sporty" driving, before switching it off, leave it to idle for several minutes, to speed up the cooling of the turbocharger and the exhaust manifold.*

Copyright by Fiat Auto

CHECKS - ADJUSTMENTS AND REPAIR OPERATIONS TO THE MOTRONIC 2.10 INJECTION/IGNITION SYSTEM IN ADDITION TO THE FAULT DIAGNOSIS WITH THE FIAT/LANCIA TESTER

WHEN WORKING ON VEHICLES FITTED WITH MOTRONIC INJECTION/IGNITION SYSTEMS, THE FOLLOWING PRECAUTIONS MUST BE OBSERVED

- *do not start up the engine when the electrical connections are not properly connected or slack at the battery terminals;*
- *do not use a rapid battery charger to start up the engine;*
- *never disconnect the battery with the engine running;*
- *to carry out the rapid charging of the battery, disconnect it first from the system;*
- *if the vehicle is going in a drying oven after painting, at temperatures in excess of 80 °C, the injection/ignition control unit must be removed first;*
- *do not connect or disconnect the electronic control unit multiple connector with the ignition switched ON;*
- *always disconnect the negative battery lead before carrying out electrical welding on the vehicle.*

Remember that this system has a memory which is always supplied (stand-by memory) containing the auto-adjustment figures. Disconnecting the battery will mean that this information is lost and it should therefore be done as infrequently as possible.

REMOVING-REFITTING FUEL FILTER

- Raise the vehicle.
- Undo the fuel inlet and outlet connectors from the filter.
- Collect the fuel which comes out during the operation in a suitable container, then seal the actual connectors without bending or twisting the rigid pipes.
- Remove the band after having undone the fixing bolt.

The fuel filter must be replaced at intervals of 60,000 km.
After replacing the filter, start up the engine and check that the seals are not leaking.

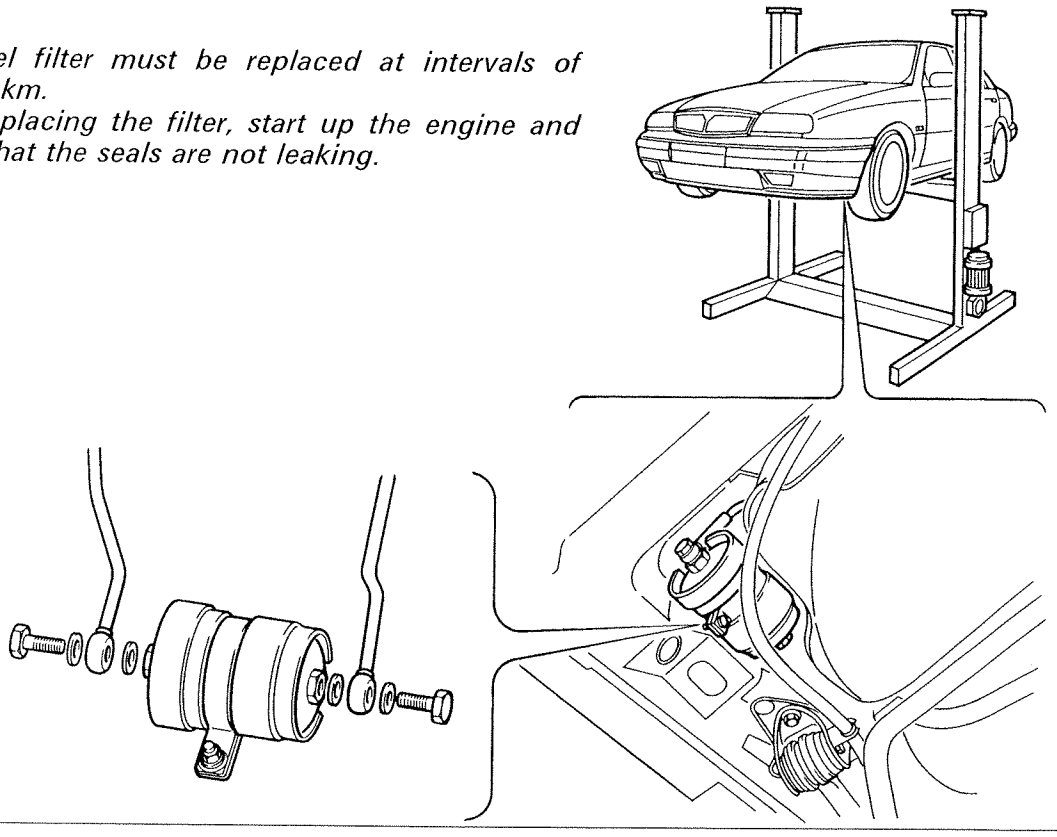

P3U46EW01

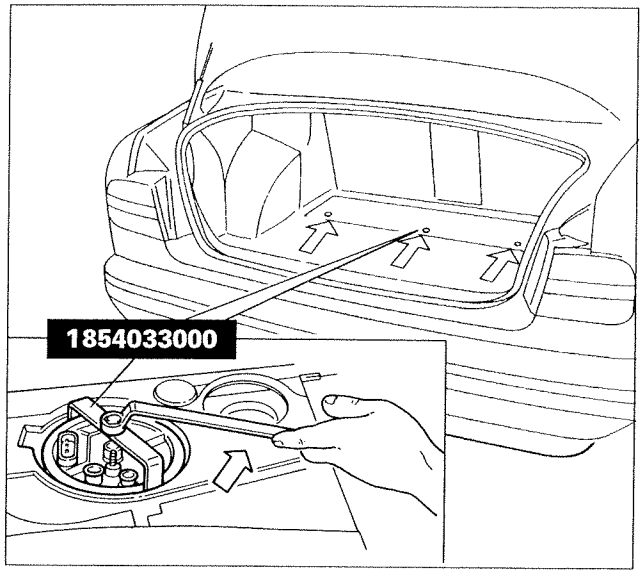

P3U47EW01

REMOVING-REFITTING ELECTRIC FUEL PUMP

The electric pump is located inside the tank. To extract it it is necessary to:

- remove the fixing buttons shown and lift up the luggage compartment carpet;
- remove the dust cover;
- disconnect the electrical connection;
- remove the safety plate;
- disconnect the fuel supply pipe from the pump (white connector);
- disconnect the fuel return pipe from the pump (red connector);
- undo the ring nut fixing the electric pump to the tank using tool 1854033000 and a polygonal spanner;
- extract the electric pump.

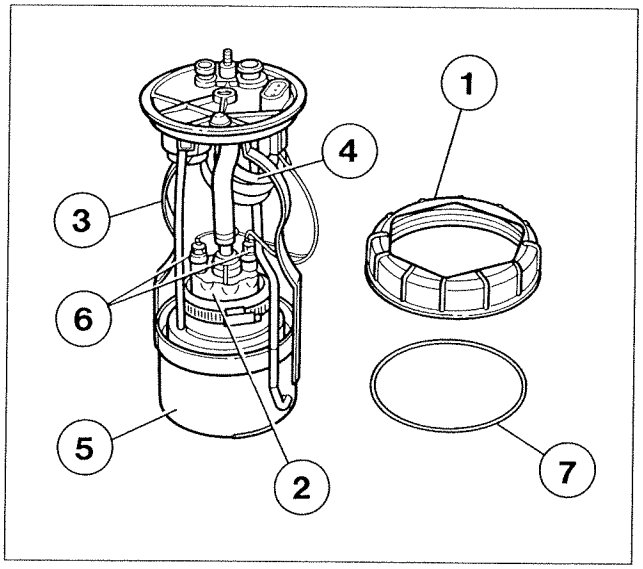

P3U47EW02

1. Fixing ring nut
2. Electric pump
3. Electrical pump flexible mounting
4. Vibration (or noise) damper
5. Gauze pre-filter
6. Electric pump electric supply connection terminals
7. Seal

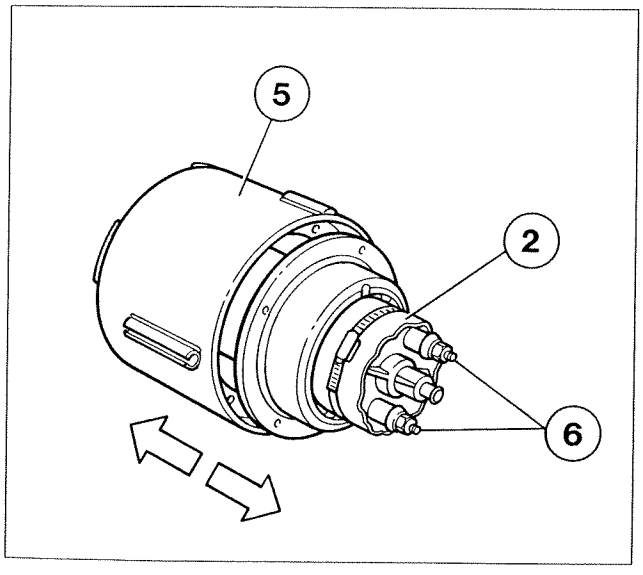

P3U47EW03

Extracting electric pump from gauze pre-filter

When refitting, the electrical cables cannnot be reversed because the terminals have different diameters.

Copyright by Fiat Auto

REMOVING-REFITTING FUEL MANIFOLD COMPLETE WITH INJECTORS AND PRESSURE REGULATOR

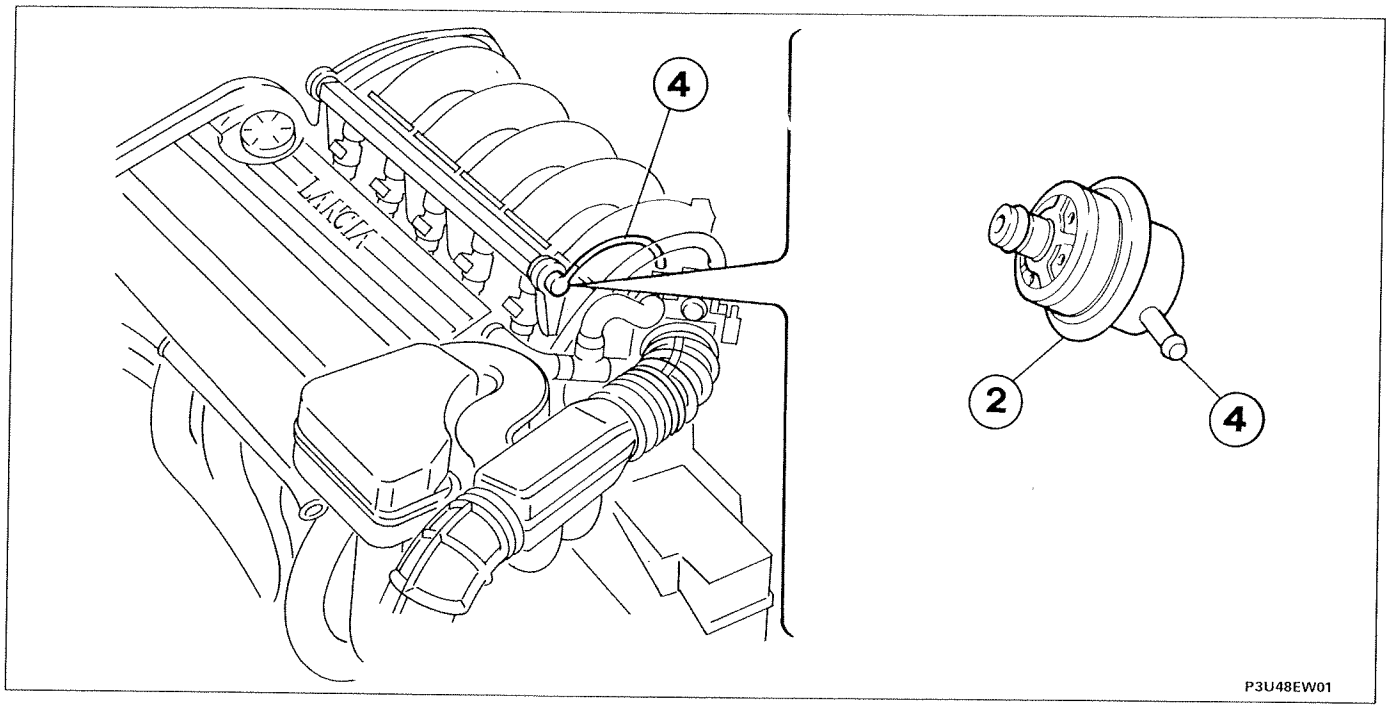

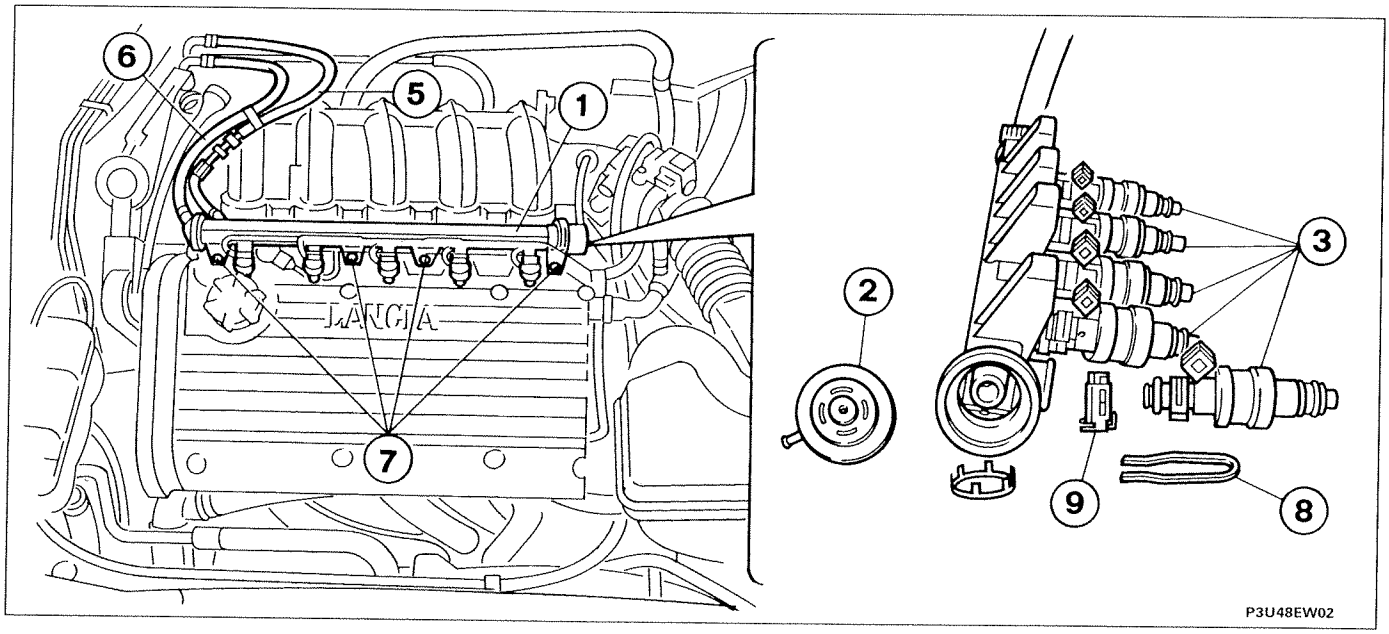

Proceed as follows:

- Disconnect the fuel supply pipe (5) from the connector.
- Loosen the band for the return pipe and disconnect the flexible rubber pipe from the rigid pipe.
- Disconnect the electrical connectors from the injectors.
- Undo the fixing bolts (7).
- Extract the injector manifold assembly.

1. Fuel manifold
2. Fuel pressure regulator
3. Injectors
4. Vacuum intke from engine inlet manifold
5. Fuel supply pipe from electric pump
6. Fuel return pipe to tank
7. Bolts fixing fuel manifold and injectors
8. Pressure regulator clip on fuel manifold
9. Injector clip on fuel manifold

CHECKS ON THE FUEL SUPPLY CIRCUIT

Checking the fuel supply pressure

- Disconnect the fuel supply pipe (2) to the manifold from the connector (6);
- Position equipment 1860955000 connecting it to the fuel supply pipe (2) and the connector (6) on the fuel manifold using the appropriate adaptor.

NOTE *Equipment 1860955000 has adaptors for connection to different types of injection systems; before making the connections, prepare the appropriate adaptors.*

- Place valve (11) in the closed position and valves (3) and (5) in the open position; make sure that the adjustment valvee (4) is completely open.
- Operate the electric fuel pump (1) with the engine switched off.
- The pressure reading on the gauge should stabilize at a pressure of 3 bar ± 0.2 bar.
- If the pressure reading is higher, then it is necessary to:
- disconnect the fuel return pipe (9) from the fuel manifold and connect another free pipe to collect the fuel coming out in a suitable container;
- operate the electric pump again, then check the reading on the pressure gauge:
  a. if it reaches 3 bar then the fuel return pipe to the tank should be checked becaus it is obstructed or bent;
  b. if it exceeds 3 bar then the fuel pressure regulator should be replaced because it is faulty.

Checking maximum fuel supply pressure (or electric pump efficiency)

- Connect equipment 1860955000 as described in the previous test.
- Close valve (5), keep valves (3 and 4) in the fully open position and valve (11) in the closed position.

- Operate the electric pump (1) with the engine switched off; the pressure should not exceed 5 bar (electric pump safety valve calibration). If this is not the case, replace the electric pump because it is defective.

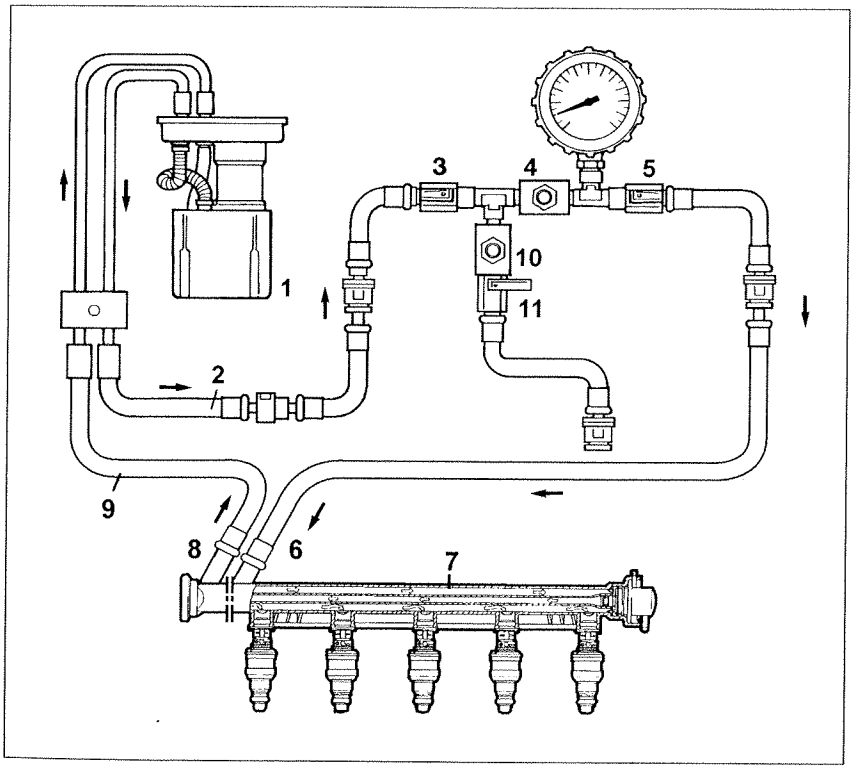

P3U49EW01

1. Electric fuel pump
2. Fuel supply pipe
3. Ball valve
4. Fuel pressure micrometric adjustment valve
5. Ball valve
6. Connector for supply pipe on inlet manifold (7)
7. Fuel manifold
8. Connector for return pipe on inlet manifold (7)
9. Fuel return pipe
10. Fuel pressure micrometric adjustment valve
11. Ball valve

Copyright by Fiat Auto

Checking injector seal

Check the seal of the injectors, proceeding as follows:

- Connect equipment 1860955000 with the fuel supply circuit as described for the previous tests.
- Fit the special plug (12) on the return pipe connector (8) and connect the end of the pipe (9) using the appropriate adaptors, then place the ball valve (11) in the closed position.

NOTE *Equipment 1860955000 has adaptors for connection to the different types of injection systems; before making the connections, have the appropriate adaptors ready.*

- Operate the electric fuel pump (1) with the engine switched off; wait until the nominal pressure (3 bar) is reached, then close the valve (3) and switch off the electric pump (1).
- As soon as the pressure stabilizes (i.e. decreases slightly) observe whether it remains constant for about 60 seconds; if this is not the case, there is a leak from one or more of the injectors or one of the connectors.

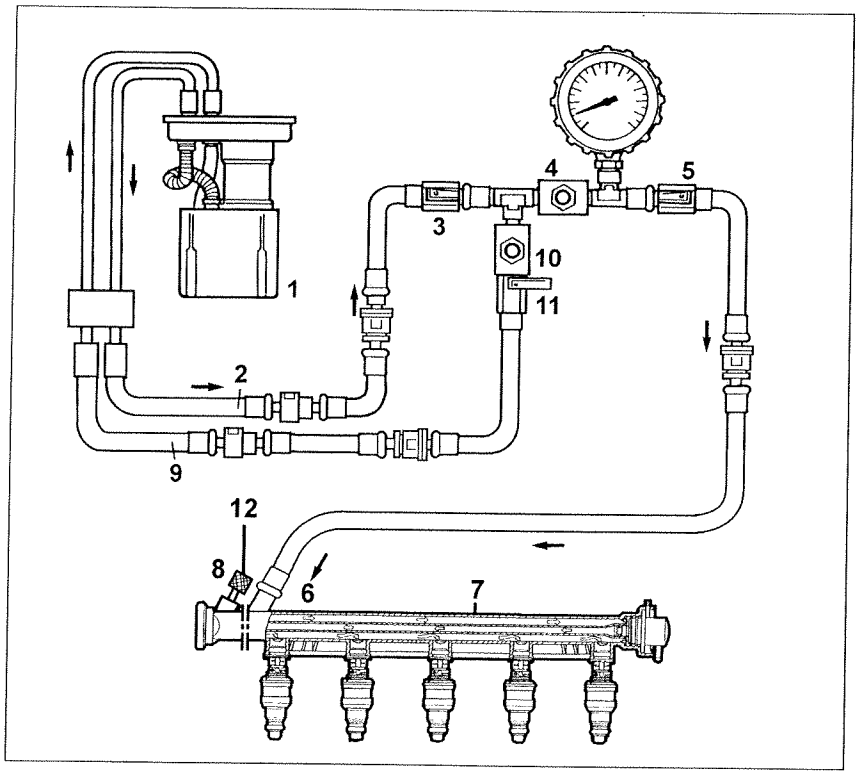

P3U50EW01

1. Electric fuel pump
2. Fuel supply pipe
3. Ball valve
4. Fuel pressure micrometric adjustment valve
5. Ball valve
6. Connector for supply pipe on inlet manifold (7)
7. Fuel manifold
8. Connector for return pipe on inlet manifold (7)
9. Fuel return pipe
10. Fuel pressure micrometric adjustment valve
11. Ball valve
12. Adaptor with plug

CHECKING FUEL CONSUMPTINO USING FLOWTRONIC EQUIPMENT

Check the fuel consumption, proceeding as follows:

- Connect equipment 1860955000 to the fuel injection system as described in the previous paragraph dealing with checking the seal of the injectors.
- Position the FLOWTRONIC equipment on the fuel supply pipe with tool 1860955000 at the manifold (7) after having fitted the the rapid attachments to the inlet and outlet pipes.
- Place the valves (3, 4, 5, 10, and 11) in the open position.
- Place a fuel pressure regulator (15) (part number 7780352) on the fuel return line with the connections as shown in the diagram.
- Disconnect the vacuum inlet pipe from the fuel pressure regulator and connect it to the regulator (15) inlet (14).
- Operate the electric fuel pump (1) as described for the previous tests; then, acting on the adjustment screw (16), set the supply pressure at the nominal value (3 bar).
- Connect the tester for the FLOWTRONIC equipment (n° 1806149001) and road test the vehicle following these instructions:
  a. The road test should be carried out at constant speeds of 90 and 120 kph, on a flat road with no wind.
  b. The tyre inflation pressure should be correct and the vehicle should not be equipped with accessories which alter the aerodynamics.
  c. The air conditioning, if fitted, should be switched off.
  d. It is vital that the speed be kept constant for the entire duration of the test, avoiding modulations of the accelerator as far as possible.
- Check that figures measured correspond with those in Section 00 "Technical Data".

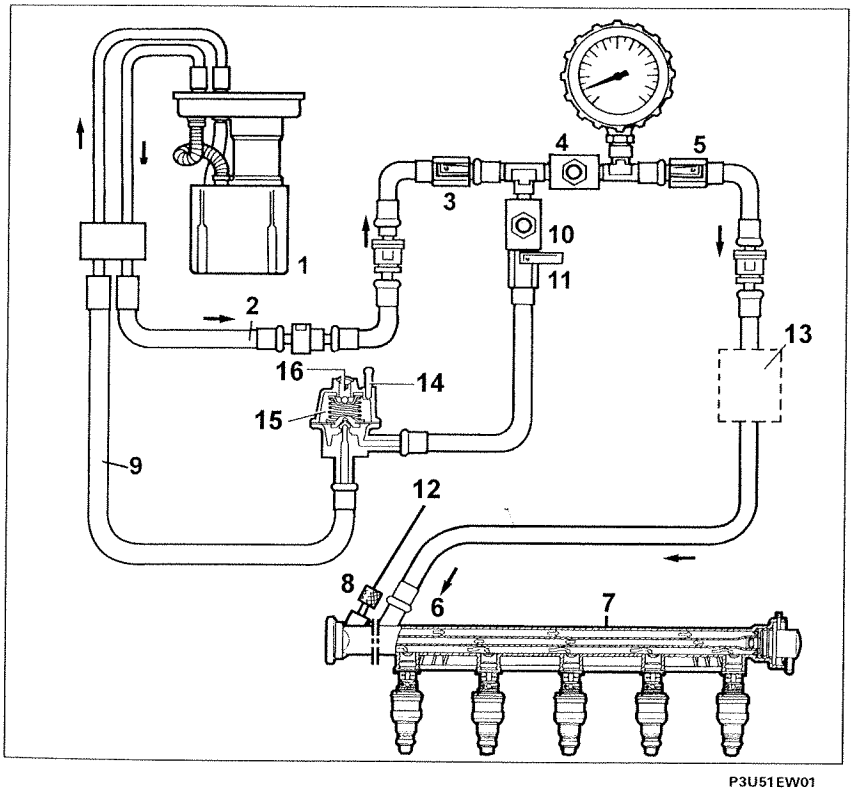

P3U51EW01

1. Electric fuel pump
2. Fuel supply pipe
3. Ball valve
4. Fuel pressure micrometric adjustment valve
5. Ball valve
6. Connector for supply pipe on fuel manifold (7)
7. Fuel manifold
8. Return pipe connector on fuel manifold (7)
9. Fuel return pipe
10. Fuel pressure micrometric adjustment valve
11. Ball valve
12. Plug
13. FLOWTRONIC equipment
14. Vacuum pick up (to be connect to the inlet manifold)
15. Fuel pressure regulator (order n° 7780352)
16. Calibrating screw

Copyright by Fiat Auto

CHECKING ENGINE IDLE SPEED

If the engine idle speed is not 750 ± 50 rpm and the injection-ignition control unit is the self-adjusting type, it is not possible to carry out the adjustment, therefore it is necessary to check that the accelerator control linkage is correctly adjusted and the fault should be sought by carrying out a complete fault diagnosis using the Examiner.

CHECKING CONCENTRATION OF POLLUTANT EMISSIONS

Through the auto-adjustment of the system, the M 2.10.4 Motronic system guarantees a constant check on the idle speed and CO percentage thereby making any outside adjustment operations superfluous (there are no longer any adjustment screws). However, a check on the content of the exhaust gases, downstream of the catalyzer, does provide precious information on the operation of the injection/ignition system, engine parameters and the catalyzer.

Checking idle concentration of CO and HC upstream of the catalytic silencer

In order to check the concentration of carbon monoxide (CO) and unburnt hydrocarbons (HC) upstream of the catalyzer, proceed as follows:

1. Undo the cap or the nut on the exhaust pipe upstream of the catalyzer and tighten the tool in its place.
2. Connect a suitably calibrated CO tester probe to the tool.
3. Start up the engine and let it reach operating temperature.
4. Check that the speed is correct.
5. Check that the idle concentration of CO is within the recommended values given in the table overleaf; if this is not the case, it is necessary to check the following:
   - correct operation of the Lambda sensor;
   - presence of air penetration in the area surrounding the Lambda sensor housing;
   - the injection and ignition system (**in particular the state of wear of the spark plugs**).
6. In the same conditions, check that the concentration of HC is below 600 p.p.m.
7 If these figures are not found, tune the engine, in particular checking:
   the ignition advance angle - the valve clearances - the valve gear timing - the engine compression.

Checking exhaust concentration of CO and HC

The exhaust concentration of carbon monoxide (CO) and unburnt hydrocarbons (HC) is measured by inserting a suitably calibrated CO tester probe at least 30 cm into the end of the exhaust pipe, as illustrated in the diagram.

If the shape of the end section of the exhaust pipe does not allow the sensor to be fully inserted, then an extension pipe must be added ensuring the seal at the join area.

1. Check that the idle CO and HC concentrations correspond with the figures in the table.
2. If the HC value differs from the figure given, whilst that measured previously upstream of the catalyzer was correct, the engine parameters are correct and therefore the cause of the problem should be sought in the decreased efficiency of the catalyzer.

Table summarizing pollutant emission tolerance figures

	CO (%)	HC (p.p.m.)	CO_2 (%)
Upstream of the catalyzer	0,4 ÷ 1	600	⩾ 12
Downstream of the catalyzer	⩽ 0,35	⩽ 90	⩾ 13

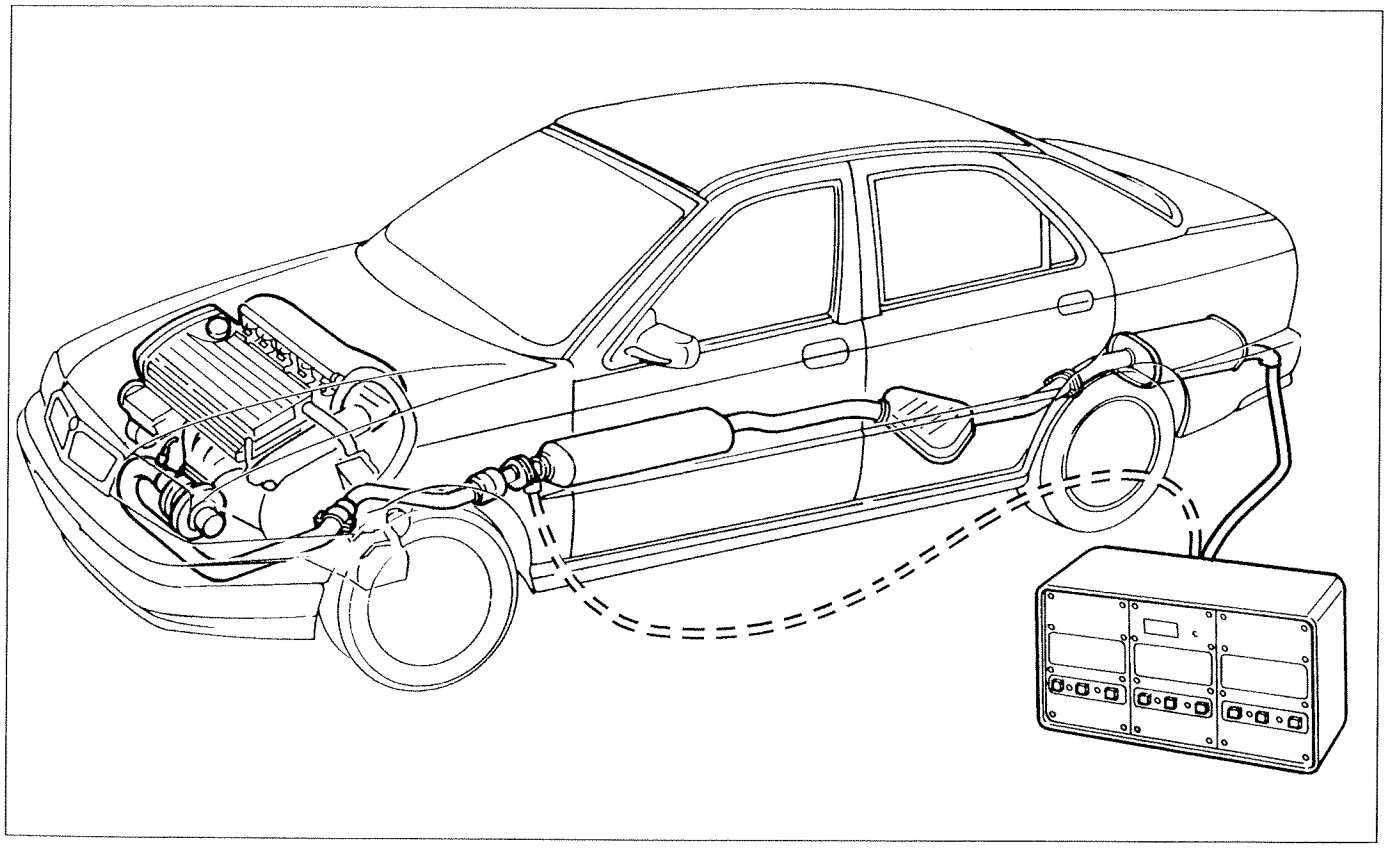

P3U53EW01

Copyright by Fiat Auto

DIAGNOSIS

The complete diagnosis of the system can be carried out through active dialogue with the diagnostic equipment (EXAMINER or SDC station).

If there is a problem with the sensors, the electronic control unit replaces the information coming from the defective sensor with (recovery) data stored in its memory to allow the operation of the engine. If a fault is detected it is memorized permanently and the sensor excluded from the system until the system is compatible once again.

The same procedure applies if the fault involves an actuator or control flap. If a fault is detected and the information replaced with recovery data, this is signalled by the special warning light in the instrument panel coming on.

The following parameters can, in the case of a problem, be managed by the control unit: flow meter, idle adjustment actuator, coolant temperature sensor, butterfly valve position sensor, Lambda sensor, air temperature sensor, battery voltage and detonation sensors. In the case of faults in the control unit, the timing sensor or the injectors, the system does not identify the fault and the vehicle remains stationary. On the operator's request, the faults can be read in the control unit using the diagnostic equipment.

Detecting faults

This is carried out during the basic function which manages the sensor/actuator.

Memorizing an error and structure of the errors memory

The errors are memorized in the control unit in the order in which they arrive in the RAMs. The location and type of error is memorized for each of them with 2 environmental conditions (specific for each type of fault) measured the moment the fault is detected and there is a frequency counter.

Classification of the defect

If a defect is recognized for the first time and the error state persists for a time $t > 0.5s$, the defect is memorized as "permanent". If this defect later disappears, it is memorized as "intermittent" and "not present". If it then reappears, it remains memorized as "intermittent", but becomes "present".
The classification of a defect as "permanent" activates the recovery functions; when the fault disappears the normal reading or implementation function is restored.

Certain types of fault are classified as "important" in accordance with pollution control regulations. The presence of these faults is signalled to the user via the display in the Infocenter.

Frequency counter

A frequency counter is allocated to each error, which is used to determine the moment a fault no longer present was memorized. The first time a fault is detected, the counter is set at 10. If the fault disappears, the counter remains at the current value. If it reappears, it is increased by 1 (with an upper limit of 50). The counter is decreased each time the vehicle is started up without the fault reappearing. If the counter reaches zero, the fault is automatically cancelled from the memory.
If after having decreased the counter, the fault should reappear, the counter is returned to a value of 10 (if, on the other hand, it was already above 10, it is not altered).

Failure signal

The failure signal is displayed when there is a defect memorized as "present" and "important".
The delay time between detecting the fault and the warning light coming on is 0.1 seconds; the delay time between the fault disappearing in the memory and the warning light going out is 4 seconds.
The signal occurs each time the ignition key is turned to the ON position. If there are "important" faults already present, the signal goes out after 4 seconds.

Cancelling the error

When the frequency counter reaches the value 0, the fault and the related parameters are cancelled.

The immediate cancellation of the entire errors memory takes place in the following cases:

- through the "cancel errors memory" command sent by the tester;
- by interrupting the electronic control unit supply (disconnecting the battery or the control unit connector).

Communications between the control unit and the diagnostic equipment

The socket to which the diagnostic equipment is connected is located in the engine compartment.

The exchange of data between the control unit and the diagnostic equipment takes place via a two-way serial line (line K) using the standard Bosch communication protocol.

The diagnostic equipment can supply the following information:

- display of the errors;
- display of the engine parameters;
- active diagnosis

List of errors

Description	Nature of the errors
Rpm sensor	Signal loss
Butterfly potentiometer	C.C.
Air temperature sensor	C.C.
Coolant temperature sensor	C.A-C.C.
Battery	Supply > 16.01V. Supply < 10V.
Lambda sensor	C.A-C.C.- Incorrect CO value
Injector	C.C
Idle speed actuator	C.C.
Petrol vapour solenoid valve	C.C.
Relays actuators	C.C.
Control unit	Operating faults in the microprocessor or control unit memories are signalled.
Flow meter	C.C.
Timing sensor	Signal missing or not plausible
Detonation sensor	Signal missing or not plausible
Vehicle speed signal	Signal missing or not plausible
Phase transformer	C.C.
Electric fuel pump	C.C.
Lancia CODE	Code not recognized or not received

Parameters displayed

Engine rpm
Injection time
Advance
Intake air temperature
Coolant temperature
Butterfly valve opening angle
Battery voltage
Lambda sensor
Self-adjustment
Flow meter
Engine knock (detonation)
Vehicle speed
Petrol vapour cut out solenoid valve
Lancia CODE
Mileage

Active diagnosis

During operation in active diagnosis it is possible to activate the following components/functions using the diagnostic equipment:
- Phase transformer
- Injectors
- Fault indication
- Petrol vapour solenoid valve
- Air conditioning
- Idle speed actuator
- Cancelling errors.

Recovery

In case of failures at the sensors, the control unit replaces the value transmitted by the sensor with a so-called Recovery figure which, according to the different faults, is either stored in the control unit memory or specially reconstructed using other available information to allow the vehicle to reach a service centre.
The detection of a fault involves it being permanently memorized and the exclusion of the sensor from the system until the signal is compatible again.

Permanent memory

The control unit has a «permanent» type memory (EEPROM), i.e. is preserves the record of the error even when the cause of the problem no longer exists and the key has been turned to the OFF position and a «volatile» type memory (RAM), where the error information is lost as soon as the cause of the problem disappears.
This also makes the identification of errors of an occasional nature more effective.

Before ending the fault diagnosis, the contents of the «permanente» memory should be cancelled using the diagnostic equipment in Active diagnosis.

The contents of the «permanent» errors memory can be cancelled in the following ways:

1 - Using the diagnostic equipment in active diagnosis.

If this is not the case, reconnecting the diagnostic equipment will give the signal for the errors already examined.

2 - If the cause of the error is no longer present and the engine has been started 5 times (running for at least 20 minutes) with intervals of at least 2 minutes in between.



Disconnecting the control unit from the system, even for very long periods, does not cancel the contents of the «permanent» memory.

page

FUEL SYSTEM

- Introduction 1
- System management strategies 1
- Diagram showing operation of fuel system 2
- Injection system wiring diagram 6
- Injection electronic control unit 8
- Diagram showing information entering/leaving injection control unit and sensors/actuators 10
- Rpm sensor 11
- Timing sensor 12
- Air flow meter 12
- Injectors 13
- Engine coolant temperature sensor 14
- Fuel temperature sensor 14
- Fuel pressure sensor 14
- Heater plugs control unit 15
- Accelerator pedal potentiometer 15
- Brake pedal switch 16
- Clutch pedal switch 16
- Excess pressure sensor 16
- Atmospheric pressure sensor 16
- Fuel supply circuit 17
- Immersed (auxiliary) electric pump assembly and operation of fuel gauge 18
- Fuel filter 18
- Pressure pump 19
- Fuel pressure regulator 19
- Multi-purpose valve 20
- Supply manifold (rail) 20
- Inertia safety switch 21
- Air supply circuit 22
- Turbocharger 23
- Exhaust gas circuit 24
- Catalytic converter 24
- Exhaust gas recirculation circuit (EGR) 25
- EGR modulating valve 26
- Recirculation circuit for vapours coming from the crankcase (blow-by) 27

Copyright by Fiat Auto

COPYRIGHT FIAT AUTO

The reproduction, even partial, of the text and illustrations is prohibited.

The information contained in this publication is purely indicative and could be out of date following modifications made by the Manufacturer, at any time, for technical or commercial reasons or in order to conform to legal requirements in the various countries.

Fiat Auto S.p.A.
D.M.C. - M.P.S.
Servizi Post Vendita - Tecnologie Assistenziali
Largo Senatore G.Agnelli, 5 - 10040 Volvera - To (Italia)
Publication no. 506.475/23 - Maggio 1998 - 400
Printed by Satiz S.p.A. - Turin (Italy)
order no. 60445996

FUEL SYSTEM

INTRODUCTION

The LANCIA k 2.4 JTD is equipped with a 5 cylinder in line 2387 cc turbo diesel engine with two valves per cylinder, a counter-balance shaft, an overhead camshaft, air supercharging with a geometrically variable turbocharger, an intercooler and electronic injection.

The fuel system ensures the correct operation of the engie and can be summarized into the following circuits:
- fuel supply circuit with "Common Rail" type injection;
- air supply circuit;
- exhaust circuit;
- oil vapour recirculation circuit from the crankcase;
- exhaust gas recirculation circuit (EGR).

The operation of the various "circuits" which make up the fuel system is improved by means of an electronically controlled system witha special control unit.
The main feature of the fuel system is the common rail type fuel injection system. This is a high pressure type electronic injection system for fast diesel engines with indirect injection.

The main characteristics of the common rail system are as follows:
- availability of high injection pressures (up to 1350 bar);
- possibility of modulating these pressures (from a minimum of 150 bar up to a maximum of 1350 bar) independently of the engine rotation speed and load;
- capacity to operate at high engine speeds (up to 6000 rpm);
- precise injection operation (the advance and the duration of the injection);
- reduction of consumption;
- reduction in emissions.

FUEL SYSTEM MANAGEMENT STRATEGIES

The control unit memory contains the management programme (software) which comprises a series of strategies, each of which manages a precise system function.
By using information provided by the various sensors (input), each strategy processes a series of parameters, using data maps stored in special areas of the control unit memory as a basis and then operates the system actuators (output) which are the devices which allow the engine to operate.

The main aim of the management strategies is to determine the exact quantity of fuel which should be injected into the cylinders, the timing (injection advance) and the pressure to obtain the best operation of the engine in terms of power, fuel economy, fumes, emissions and drivèability.

These are the basic system management strategies:

- controlling the quantity of fuel injected;
- controlling the injection advance;
- controlling the injection pressure;
- controlling the auxiliary electric fuel pump;
- controlling the injection during deceleration (cut off);
- controlling the idle speed;
- controlling the maximum speed limit;
- controlling the maximum torque limit;
- controlling the fuel temperature;
- controlling the engine coolant temperature;
- controlling the heater plugs;
- controlling the exhaust fumes;
- controlling the exhaust gas recirculation (EGR);
- controlling the engagement of the climate control system;
- controlling the engine immobilizer function (Lancia CODE);
- autodiagnosis.

Copyright by Fiat Auto

DIAGRAM SHOWING OPERATION OF FUEL SYSTEM

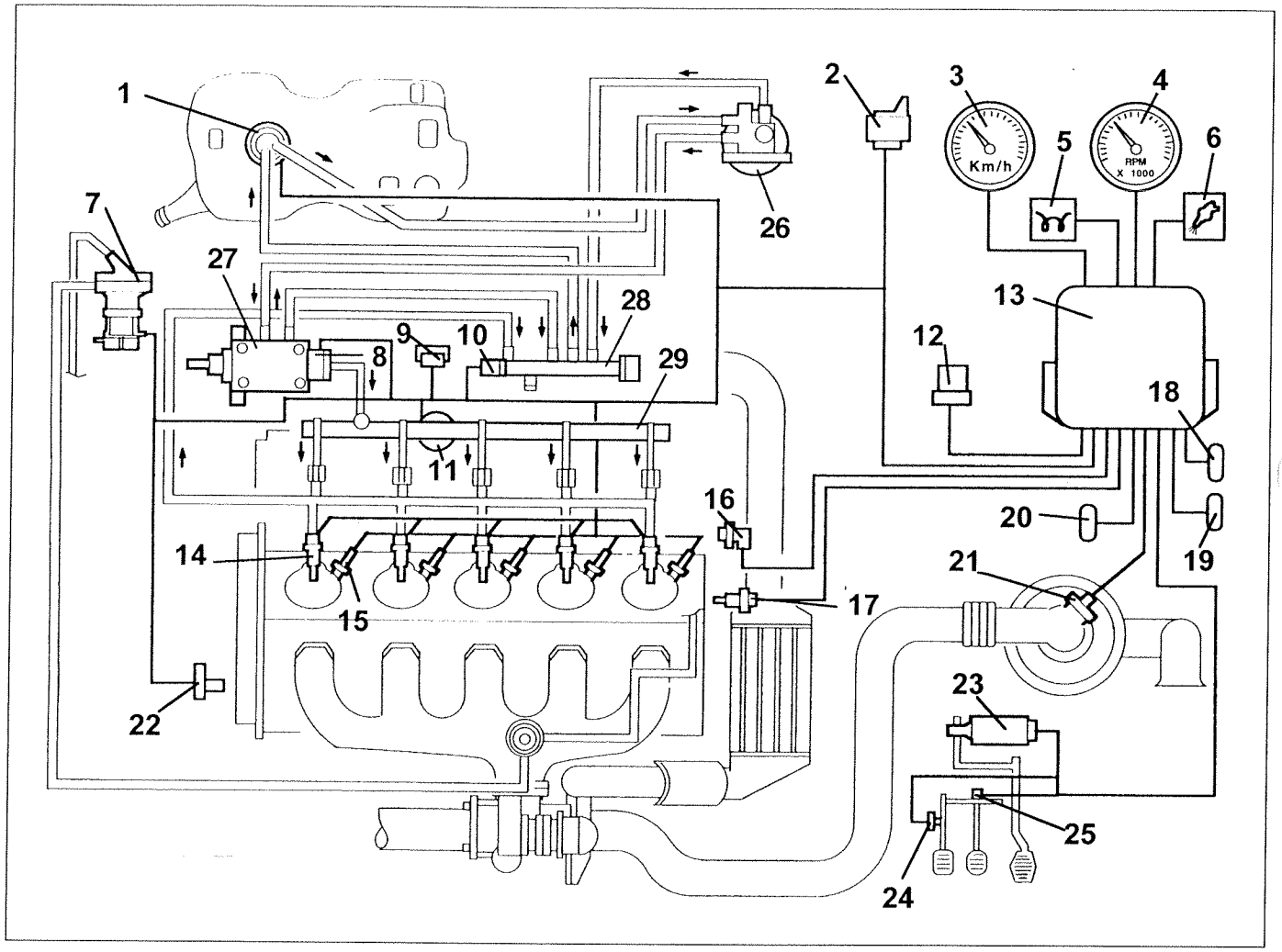

P3U02FW01

1. Auxiliary electric fuel pump
2. Heater plugs control unit
3. Vehicle speed (from ABS system)
4. Rev counter
5. Heater plugs warning light
6. Infocenter (system failure warning)
7. EGR modulating valve
8. Pressure regulator
9. Excess pressure sensor
10. Fuel temperature sensor
11. Fuel pressure sensor
12. Injection system relay
13. Electronic control unit
14. Injectors
15. Heater plugs
16. Rpm sensor
17. Engine coolant temperature sensor
18. Climate control system connector
19. Diagnostic socket
20. Lancia CODE system connector
21. Flow meter
22. Timing sensor
23. Potentiometer on accelerator pedal
24. Switch on clutch pedal
25. Switch on brake pedal
26. Fuel filter
27. Pressure pump
28. Return manifold (low pressure)
29. Supply manifold (high pressure)

Controlling quantity of fuel injected

On the basis of the signals coming from the accelerator pedal potentiometer, the flow meter and the rpm sensor, the control unit operates the fuel pressure regulator and the injectors, as appropriate.
The injection timing and consequently the sequence is determined when the engine is started up using the signals coming from the rpm sensor and the timing sensor (synchronization stage); later on the injection timing is implemented using only the timing sensor signal and the injection sequence 1-2-4-5-3.

The control unit inibits the injection in the following cases:
- fuel pressure value above 1500 bar;
- fuel pressure value below 120 bar;
- engine speed above 6000 rpm.

At operating temperature the maximum duration of the injection (opening time for the injector) is 1500 ns, whilst during starting it can reach up to 3000 ns.

Controlling the injection advance

The electronic control unit determines the injection advance mainly on the basis of the quantity of fuel to be injected.
Subsequently, the injection advance is corrected on the basis of the temperature of the engine coolant and speed in order to compensate, whilst the engine is warming up, for the increase in the delay in ignition due to the low temperatures in the combustion chambers.

Controlling the injection pressure

This is of particular importance given that the injection pressure affects the following parameters:

- the quantity of fuel introduced in the cylinders and the duration of the injection time;
- the atomization of the fuel injected;
- the penetration of the jet;
- the delay between the electrical operation of the injector and the effective start and end of injection.

The above parameters have a considerable effect on the behaviour of the engine, above all as far as the power supplied, exhaust emissions, noise and driveability are concerned.
On the basis of the engine load, the injection control unit operates the pressure regulator, as appropriate, to obtain a constant optimum line pressure.
With the engine cold, the injection pressure is corrected according to the engine coolant temperature and speed in order to satisfy the engine requirements at different operating temperatures.

Controlling the auxiliary electric fuel pump

The auxiliary electric fuel pump, immersed in the tank, is supplied by the injection control unit by means of a relay when the ignition is switched ON.

The supply to the electric pump is inhibited when one of the following conditions occurs:
- after a certain length of time with the ignition switched ON and the engine not running;
- if the inertia switch has been operated.

Controlling the injection during deceleration (cut off)

The fuel cut off strategy is implemented when the injection control unit receives information that the accelerator pedal is released from the relevant potentiometer.
Under these circumstances the control unit cuts off the supply to the injectors and restores it before the idle speed is reached.

Copyright by Fiat Auto

Controlling the idle speed

On the basis of the signals coming from the rpm sensor and the engine coolant temperature sensor, the control unit operates the pressure regulator and varies the operating times for the injectors to keep the idle speed constantly stable.
In certain conditions, in order to control the idle speed, the control unit also takes the battery voltage into account.

Controlling the maximum speed limit

Depending on the number of revs, the injection control unit limits the maximum speed via two types of operation:
- as the maximum speed is neared, it decreases the quantity of fuel injected by reducing the line pressure;
- when 6000 rpm is exceeded, it inhibits the operation of the injectors.

Controlling the maximum torque limit

Depending on the number of revs, the injection control unit calculates the torque limit and maximum permissible fumes parameters based on maps stored in its memory.
It then corrects the above parameters with the engine coolant temperature and vehicle speed data and uses the values obtained in this way to meter the quantity of fuel to be injected involving the pressure regulator and the injectors.

Controlling the fuel temperature

The injection control unit is constantly informed of the temperature of the fuel by the sensor on the return manifold.
If the temperature of the fuel exceeds a certain figure (about 110 °C), the control unit reduces the line pressure using the pressure regulator and leaving the injection times unaltered.

Controlling the engine coolant temperature

The injection control unit is constantly informed of the temperature of the engine coolant by the sensor on the thermostat.

If the temperature of the engine coolant exceeds a certain figure, the control unit implements the following actions:
- it reduces the quantity of fuel injected acting on the pressure regulator and the injectors (power reduction);
- it operates the engine radiator cooling fan.

Controlling the heater plugs

The injection control unit operates the heater plugs control unit so that the temperature in the combustion chamber is such as to facilitate the self-ignition of the fuel and thereby make starting easier.
In effect, the injection control unit commands the operation of the heater plugs control unit for a given period both before (pre-heating) and after (post-heating) the engine is started up and it also controls the warning light in the instrument panel.
The pre and post-heating times and the coming on of the heater plugs warning light all vary according to the temperature of the engine coolant.

Controlling exhaust fumes

The injection control unit uses this function to limit any exhaust fumes which could occur during fierce acceleration.
In order to satisfy this requirement, the control unit processes the signals supplied by the accelerator pedal potentiometer, the rpm sensor and the intake air quantity sensor (flow meter) and operates the fuel pressure regulator the the injectors to suitably meter the quantity of fuel to be injected.

Controlling the exhaust gas recirculation

On the basis of the signals provided by the rpm sensor, the air intake quantity sensor, the engine coolant temperature sensor and the accelerator pedal position sensor, the control unit calculates the operating times for the EGR solenoid valve in order to partly recirculate the exhaust gases in certain engine operating conditions only.

Controlling the engagement of the air conditioning system

The injection control unit manages the operation of the air conditioning system compressor electro--magnet coupling according to a logic to avoid operating conditions which would adverserly affect engine performance.

When the compressor is switched on, the injection control unit increases the quantity of fuel during idling so that the engine can adapt to the greater power requirements and it interrupts the supply to the compressor in the following conditions:
- request for high power for the engine (fierce acceleration);
- engine coolant temperature too high.

Controlling the engine immobilizer function

The system is equipped with an engine immobilizer function. This function has a special control unit (Lancia CODE) capable of communicating with the injection control unit and an electronic key, with a special transmitter for sending a recognition code.
Each time the key is turned to the OFF position, the Lancia CODE system completely deactivates the injection control unit.

When the ignition key is turned to the ON position the following operations take place, in order:
1. the injection control unit (whose memory contains a secret code) sends the Lancia CODE control unit a request for the latter to send the secret code to deactivate the immobilizing function;
2. the Lancia CODE control unit responds by only sending the secret code after having, in turn, received the recognition code transmitted by the ignition key;
3. the recognition of the secret code allows the deactivation of the injection control unit immobilization and normal operation can be resumed.

Autodiagnosis

The complete electronic fault diagnosis of the injection system can be carried out by connecting the special equipment (EXAMINER or SDC station) to the diagnostic socket.

The system is also equipped with an autodiagnostic function which recognizes, memorizes and signals any faults.

If a fault is detected with the sensors or actuators, the signal reconstruction strategies (recovery) are immediately activated to ensure that the engine can operate at an acceptable level. It is therefore possible to drive to a Service Centre to have the repairs carried out.

Copyright by Fiat Auto

INJECTION SYSTEM WIRING DIAGRAM

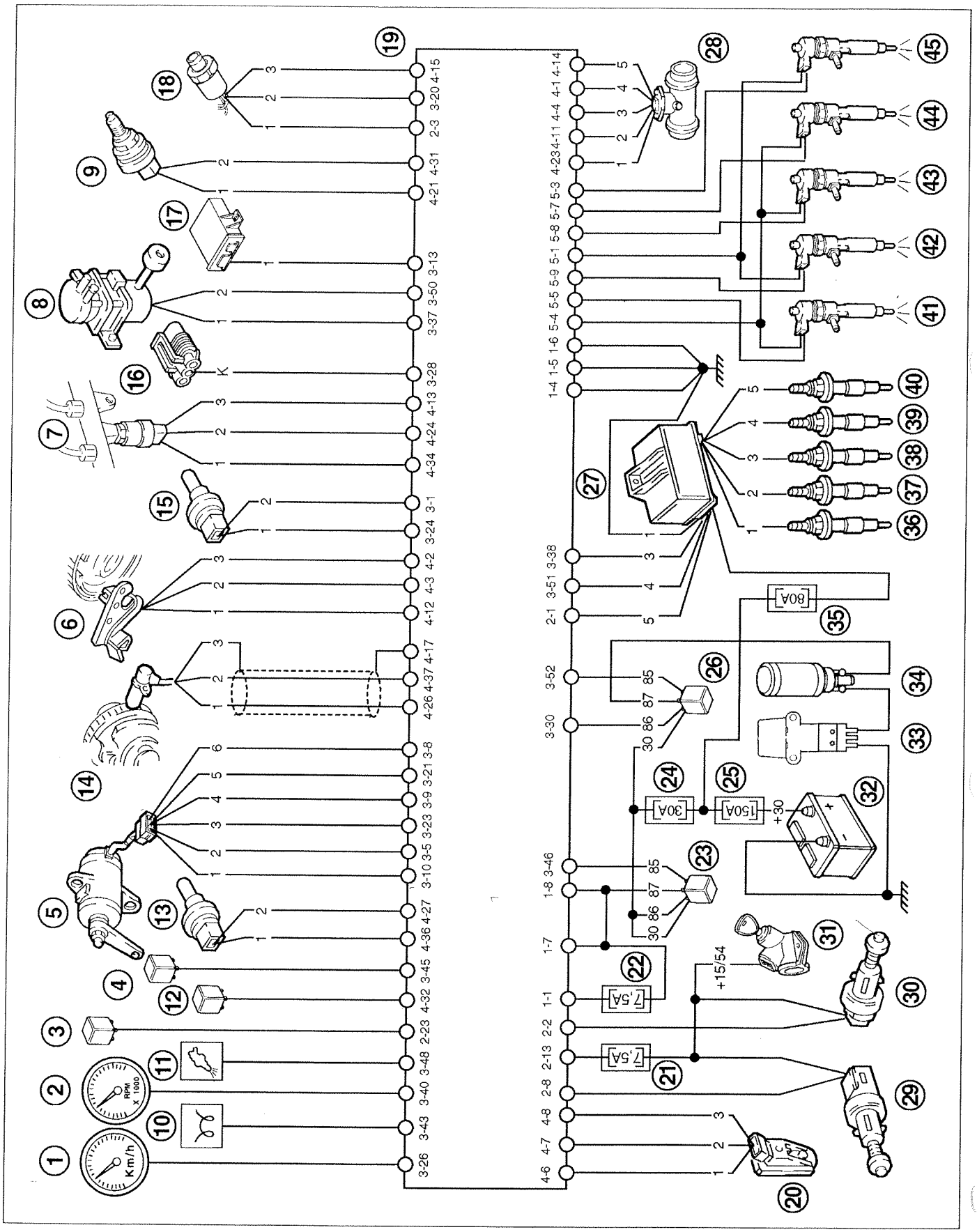

Components key - injection system wiring diagram

1. Vehicle speed (information transmitted to the control unit by the ABS)
2. Rev counter
3. Radiator fan low speed relay feed
4. Radiator fan high speed relay feed
5. Accelerator pedal potentiometer
6. Timing sensor
7. Fuel pressure sensor
8. EGR system modulating solenoid valve
9. Fuel pressure regulator
10. Heater plugs warning light in instrument panel
11. Injection system failure (information displayed at infocenter)
12. Air conditioning system relay feed
13. Engine coolant temperature sensor
14. Rpm sensor
15. Fuel temperature sensor
16. Diagnostic socket
17. Lancia CODE control unit
18. Four stage pressure switch
19. Injection electronic control unit
20. Excess pressure sensor
21. Fuse (7.5A) protecting injection control unit (supply +15 from ignition switch)
22. Fuse (7.5A) protecting injection control unit (supply +30 from battery)
23. Main injection system relay
24. Fuse (30A) protecting injection system
25. General fuse (150A) protecting electrical equipment (MAXI-FUSE)
26. Auxiliary electric fuel pump relay feed
27. Heater plugs control unit
28. Intake air temperature and quantity sensor (flow meter)
29. Switch on brake pedal
30. Switch on clutch pedal
31. Ignition switch
32. Battery
33. Inertia switch
34. Auxiliary electric pump (immersed in the tank)
35. Fuse (80A) protecting heater plugs control unit
36. Heater plug for cylinder no.1
37. Heater plug for cylinder no.2
38. Heater plug for cylinder no.3
39. Heater plug for cylinder no.4
40. Heater plug for cylinder no.5
41. Injector for cylinder no.1
42. Injector for cylinder no.2
43. Injector for cylinder no.3
44. Injector for cylinder no.4
45. Injector for cylinder no.5

Copyright by Fiat Auto

INJECTION ELECTRONIC CONTROL UNIT

The injection electronic control unit processes the signals coming from the various sensors through the application of software algorhythms and controls the operation of the actuators (in particular the injectors and pressure regulator) in order to ensure the optimum operation of the engine.
The control unit is the "flash E.P.R.O.M." type which can be programmed from the outside without operating on the hardware.
The injection control unit contains the absolute pressure sensor and is connected to the wiring by means of a 134 pin connector.

Identification of injection control unit connections (pin-out)

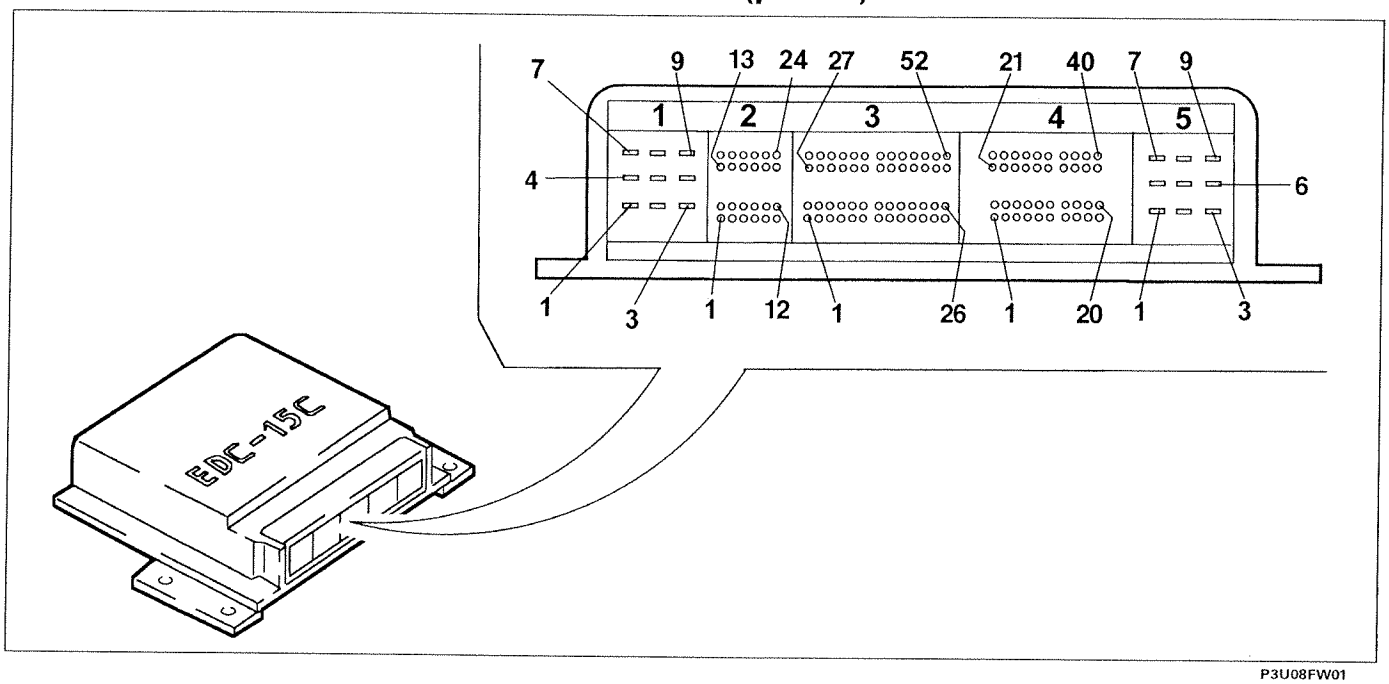

P3U08FW01

1-01 Battery positive (+30) from main relay
1-02 Not connected
1-03 Not connected
1-04 Earth
1-05 Earth
1-06 Earth
1-07 Battery positive (+30) from main relay
1-08 Battery positive (+30) from main relay
1-09 Not connected
2-01 Heater plugs timer signal
2-02 Switch on clutch pedal
2-03 Request to switch on climate control
2-04 Not connected
2-05 Not connected
2-06 Not connected
2-07 Not connected
2-08 Switch on brake pedal
2-09 Not connected
2-10 Not connected
2-11 Not connected
2-12 Not connected
2-13 Positive (+15) from ignition switch
2-14 Not connected
2-15 Not connected
2-16 Not connected
2-17 Not connected
2-18 Not connected
2-19 Not connected
2-20 Not connected
2-21 Not connected
2-22 Not connected
2-23 Request to switch on radiator fan low speed
2-24 Not connected
3-01 Fuel temperature sensor earth
3-02 Not connected
3-03 Not connected

3-04 Not connected
3-05 Supply for accelerator pedal potentiometer 1
3-06 Not connected
3-07 Not connected
3-08 Earth for accelerator pedal potentiometer 2
3-09 Signal for accelerator pedal potentiometer 2
3-10 Signal for accelerator pedal potentiometer 1
3-11 Not connected
3-12 Not connected
3-13 Lancia CODE control unit
3-14 Not connected
3-15 Not connected
3-16 Not connected
3-17 Not connected
3-18 Not connected
3-19 Not connected
3-20 Go ahead for climate control from four stage pressure switch
3-21 Supply for accelerator pedal potentiometer 2
3-22 Not connected
3-23 Earth for accelerator pedal potentiometer 1
3-24 Fuel temperature sensor signal
3-25 Not connected
3-26 Vehicle speed signal (from ABS)
3-27 Not connected
3-28 Diagnostic socket connection (line K)
3-29 Not connected
3-30 Auxiliary electric fuel pump supply (immersed in the tank)
3-31 Not connected
3-32 Not connected
3-33 Not connected
3-34 Not connected
3-35 Not connected
3-36 Not connected
3-37 EGR modulating valve supplyl
3-38 Heater plugs timer operation
3-39 Not connected
3-40 Rpm signal to the rev counter
3-41 Not connected
3-42 Not connected
3-43 Heater plugs warning light
3-44 Not connected
3-45 Request to switch on radiator fan high speed
3-46 Main relay go ahead
3-47 Not connected
3-48 Injection system failure
3-49 Not connected
3-50 EGR modulating solenoid valve earth
3-51 Heater plugs timer operation
3-52 Auxiliary electric pump relay feed go ahead
4-01 Flow meter supply
4-02 Timing sensor earth
4-03 Timing sensor signal
4-04 Flow meter earth
4-05 Not connected
4-06 Excess pressure sensor signal
4-07 Excess pressure sensor earth
4-08 Excess pressure sensor supply
4-09 Not connected
4-10 Not connected
4-11 Flow meter supply
4-12 Timing sensor supply
4-13 Fuel pressure sensor supply
4-14 Flow meter signal
4-15 Four stage pressure switch
4-16 Not connected
4-17 Rpm sensor screen
4-18 Not connected
4-19 Not connected
4-20 Not connected
4-21 Fuel pressure regulator
4-22 Not connected
4-23 Air temperature sensor signal
4-24 Fuel pressure sensor signal
4-25 Not connected
4-26 Rpm sensor signal
4-27 Engine coolant temperature sensor earth
4-28 Not connected
4-29 Not connected
4-30 Not connected
4-31 Fuel pressure regulator
4-32 Climate control system relay
4-33 Not connected
4-34 Fuel pressure sensor earth
4-35 Not connected
4-36 Engine coolant temperature sensor signal
4-37 Rpm sensor earth
4-38 Not connected
4-39 Not connected
4-40 Not connected
5-01 Supply for injectors for cylinders 2 and 5
5-02 Not connected
5-03 Operation of injector for cylinder no.5
5-04 Supply for injectors for cylinders no.1, 3 and 4
5-05 Operation of injector for cylinder no.1
5-06 Not connected
5-07 Operation of injector for cylinder no.4
5-08 Operation of injector for cylinder no.3
5-09 Operation of injector for cylinder no.2

Copyright by Fiat Auto

DIAGRAM SHOWING INFORMATION ENTERING/LEACING THE INJECTION CONTROL UNIT AND SENSORS/ACTUATORS

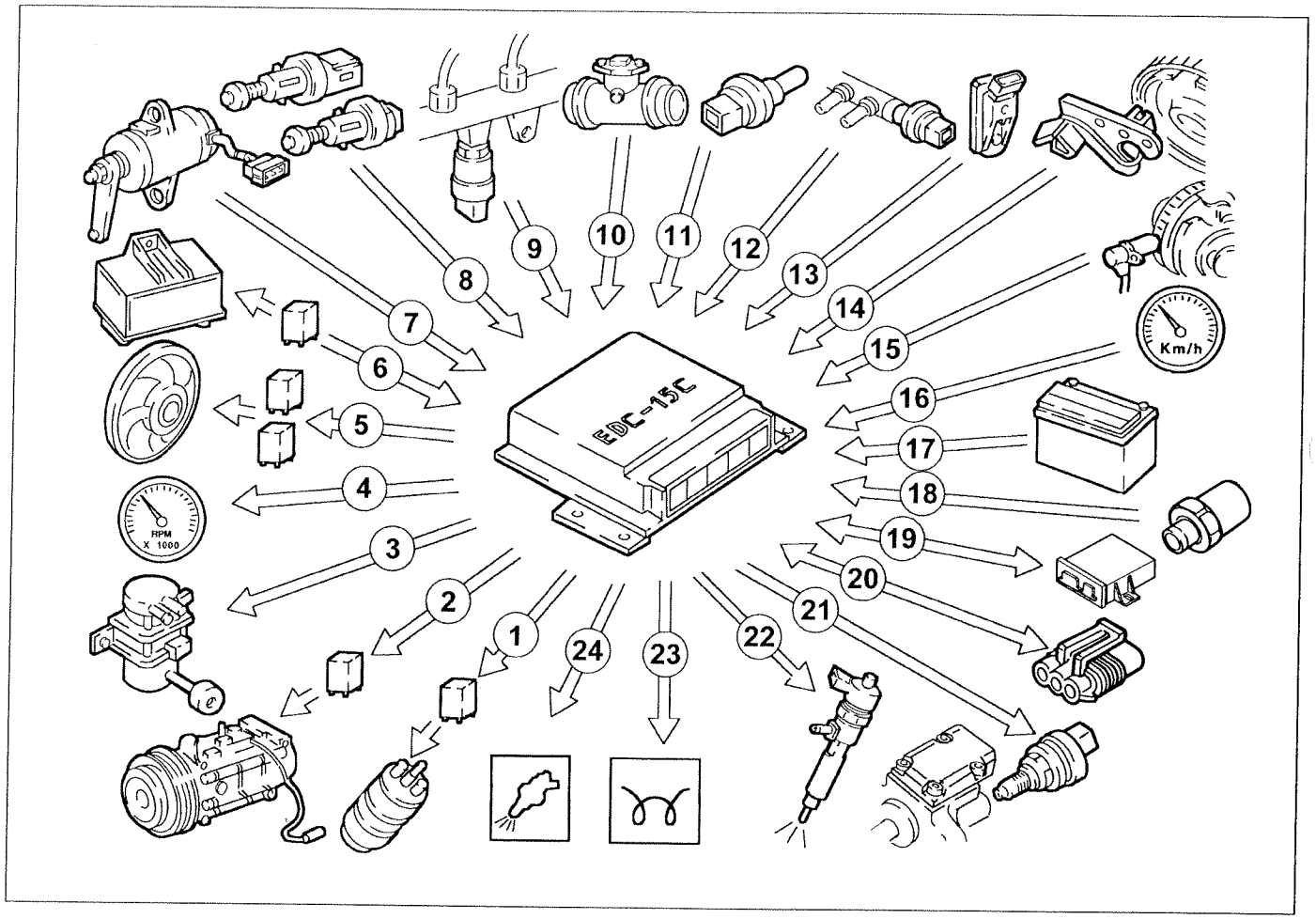

P3U10FW01

1. Auxiliary electric fuel pump
2. Climate control compressor
3. EGR modulating valve
4. Rev counter
5. Radiator fans
6. Heater plugs control unit
7. Accelerator pedal potentiometer
8. Brake and clutch pedal switches
9. Fuel pressure sensor
10. Air intake temperature and quantity sensor (flow meter)
11. Engine coolant temperature sensor
12. Fuel temperature sensor
13. Excess pressure sensor
14. Timing sensor
15. Rpm sensor
16. Vehicle speed (from ABS)
17. Battery
18. Four stage pressure switch
19. Lancia CODE control unit
20. Diagnostic socket
21. Fuel pressure regulator
22. Injectors
23. Heater plugs warning light
24. Injection system failure (information transmitted to the infocenter)

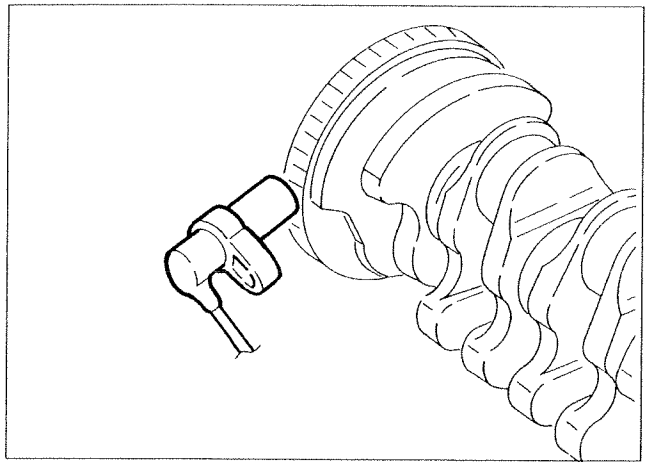

P3U11FW01

RPM SENSOR

The rpm sensor is fitted on the crankcase facing the flywheel on the crankshaft.

The sensor is the inductive type, i.e. operating through the variation in the magnetic field created when the flywheel teeth (60-2) pass in front of the sensor element.

The injection control unit uses the rpm sensor signal to determine the crankshaft angular position and speed.

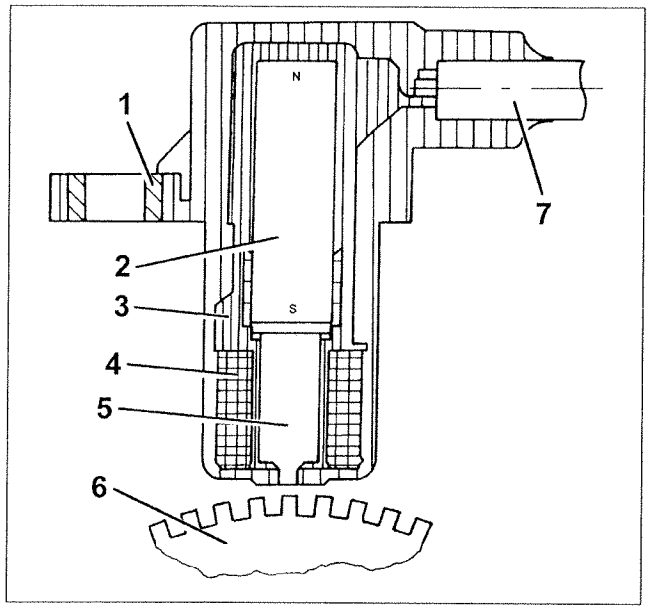

P3U11FW02

Operation

The passage from a full space to an empty space, depending on whether or not there is a tooth, determines a variation in the magnetic flow sufficient to produce an alternating voltage by counting the teeth on the flywheel.

The peak rpm sensor output voltage depends, all things being equal, on the distance between the sensor and the flywheel teeth.

1. Metal bush
2. Permanent magnet
3. Sensor body
4. Winding
5. Core
6. Flywheel
7. Electrical connection

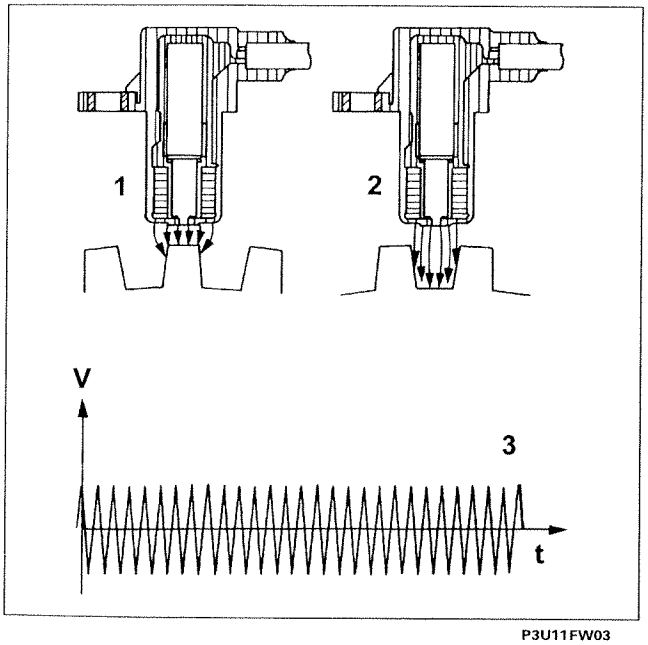

P3U11FW03

To obtain correct signals, the recommended distance between the flywheel and the sensor (gap) should be between 0.8 and 1.5 mm.

This distance cannot be adjusted therefore, if the gap is outside of the tolerance, check the condition of the sensor and the flywheel.

Winding resistance: 860 Ohm ±10% at 20 °C

1. Maximum magnetic flow
2. Minimum magnetic flow
3. Alternating voltage

Copyright by Fiat Auto

TIMING SENSOR

This Hall effect type sensor is fitted on the cylinder head facing the camshaft pulley (exhaust).
There is an opening on the pulley which allows the sensor to detect the engine timing position and signal it to the injection control unit.
The injection control unit uses the timing sensor signal to recognize TDC at the end of the compression stroke.

Operation

A semi-conductor layer, with a current passing through it, immersed in a normal magnetic field (lines of force perpendicular to the direction of the current), produces a difference in power at its terminals known as the Hall effect.
If the intensity of the current remains constant, the tension created only depends on the intensity of the magnetic field; the intensity of the magnetic field therefore only needs to vary periodically to obtain a modulated electrical signal whose frequency is proportional to the speed at which the magnetic field changes.
To achieve this change, the sensor passes through a metal ring (inner part of the pulley) with an opening.
As it moves the metal part of the ring covers the sensor stopping the magnetic field with a consequent low output signal; conversely, by the opening where there is a magnetic field, the sensor produces a high signal.
This signal, together with the signals for the rpm and TDC allow the injection control unit to recognize the position of the pistons and determine the injection point.

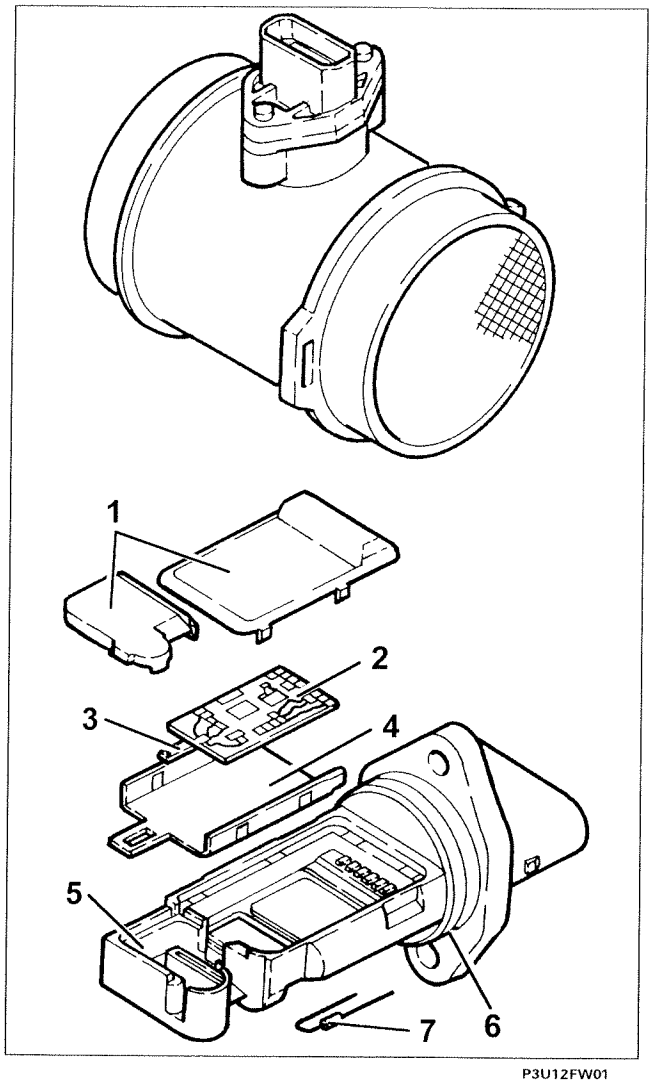

P3U12FW01

AIR FLOW METER

The flow meter is located on the air inlet hose and is the heated film type.
Inside the flow meter is the intake air temperature sensor.

Operation

The operating principle is based on a heated diaphragm in a measuring duct through which the intake air entering the engine flows.
The hot film diaphragm is kept at a constant temperature (about 120 °C higher than the temperature of the air entering) by the heating resistance.
The mass of air passing through the measuring duct tends to remove heat from the diaphragm therefore, in order to keep the latter at a constant temperature, a certain current must pass through the resistance.
This current, being proportional to the mass of air which flows through the engine, is measured using a Wheatstone bridge and the signal obtained is sent to the injection control unit.

1. Covers
2. Electronic chart
3. Sensor
4. Support plate
5. Support
6. Seal (O-Ring)
7. Temperature sensor

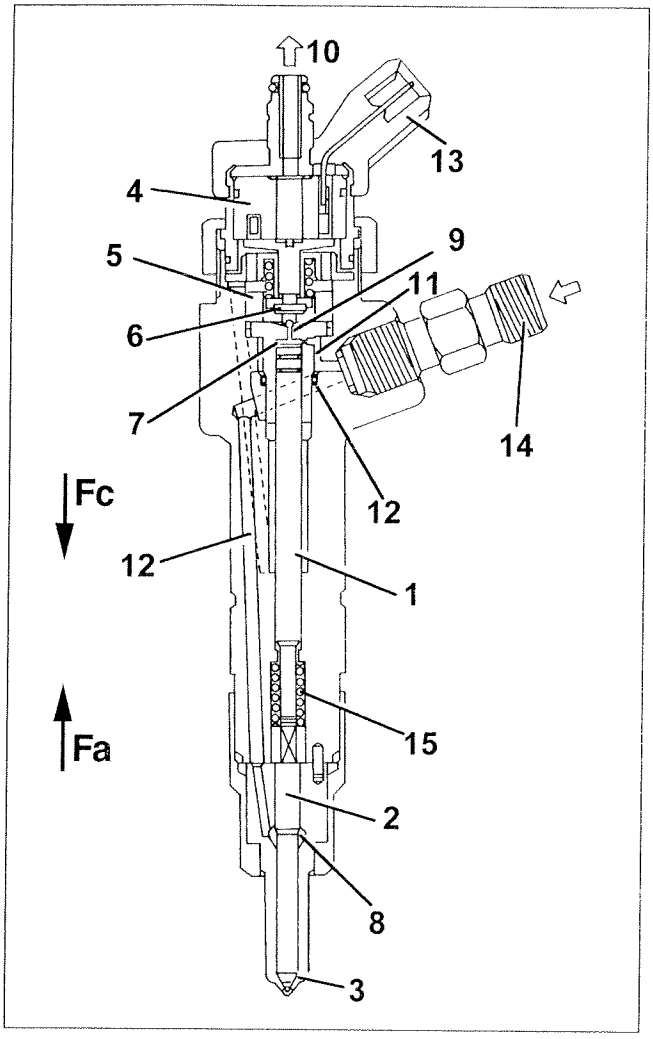

P3U13FW01

1. Pressure rod
2. Pin
3. Nozzle
4. Coil
5. Valve
6. Shutter with ball
7. Control area
8. Supply volume
9. Control volume
10. Fuel outlet connector (low pressure)
11. Control duct
12. Supply duct
13. Electrical connection
14. Fuel inlet connector (high pressure)
15. Spring

INJECTORS

The injectors, fitted on the cylinder head, are the electro-magnetic type operated directly by the injection control unit.
The injectors have a high pressure supply duct and a recirculation pipe at ambient pressure; the supply duct is connected to the supply manifold (rail) with pipes capable of withstanding the high operating pressures.

The injector can be divided into two parts:
- actuator/nozzle composed of a pressure rod (1), pin (2) and nozzle (3);
- solenoid valve composed of a coil (4) and valve (5).

Operation

The operation of the injector can be divided into three stages:

1. rest position

The coil (4) is de-energized and the shutter (6) is in the closed position and does not allow the introduction of fuel into the cylinder: Fc > Fa where Fc is the force created by the pressure acting on the control area (7) of the pressure rod (1) and Fa is the force due to the pressure acting on the supply volume (8).

2. start of injection

The coil (4) is energized and causes the shutter (6) to be raised. The fuel flows from the control volume (9) to the return manifold causing a drop in pressure in the control area (7). At the same time, through the supply duct (12), the line pressure exerts a force Fa > Fc on the supply volume (8), causing the pin (2) to be raised with the consequent introduction of fuel into the cylinders.

3. end of injection

The coil (4) is de-energized and returns the shutter (6) to the closed position; the latter returns the pin (2) to the closed position and the injection consequently is at an end.

Copyright by Fiat Auto

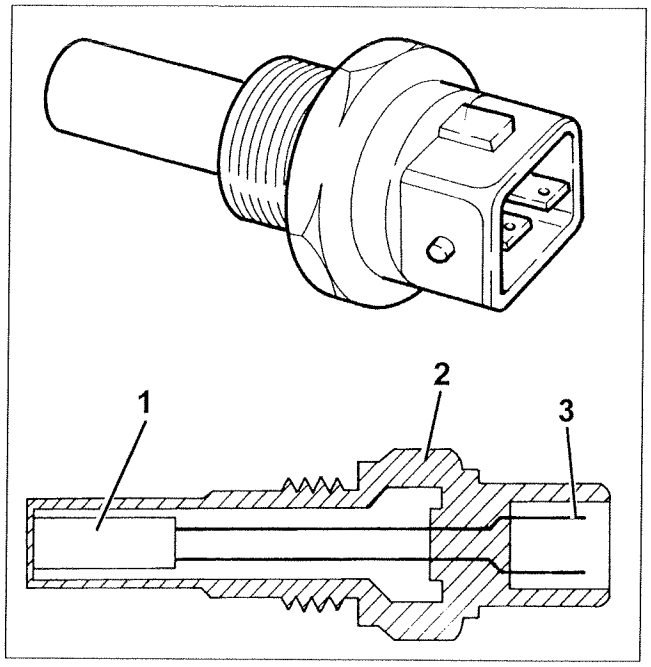

P3U14FW01

ENGINE COOLANT TEMPERATURE SENSOR

This sensor is fitted on the thermostat and measures the temperature of the coolant by means of an NTC thermistor (Negative Temperature Coefficient).

The sensor is produced using semi-conductor technology, therefore if the temperature of the sensor element increases as the temperature of the coolant increases, the resistance value decreases as a result.

As the variation in the resistance is not linear, increasea are higher at low temperatures than at high temperatures.

1. NTC resistance
2. Sensor body
3. Electrical connector

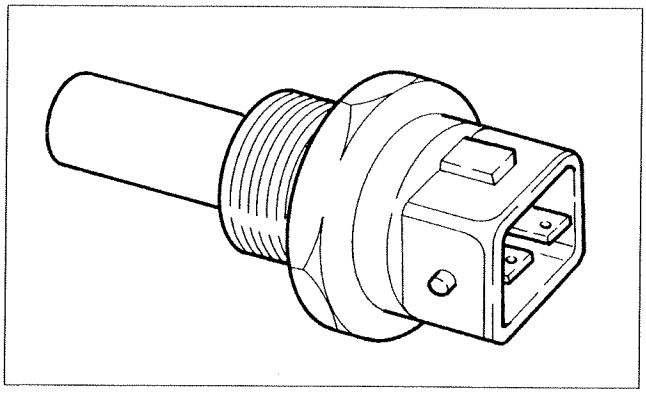

P3U14FW02

FUEL TEMPERATURE SENSOR

This sensor is fitted on the return manifold and measures the temperature of the fuel by means of an NTC thermistor (Negative Temperature Coefficient).

For the operation of the sensor, refer to the previous description for the coolant temperatu'e sensor.

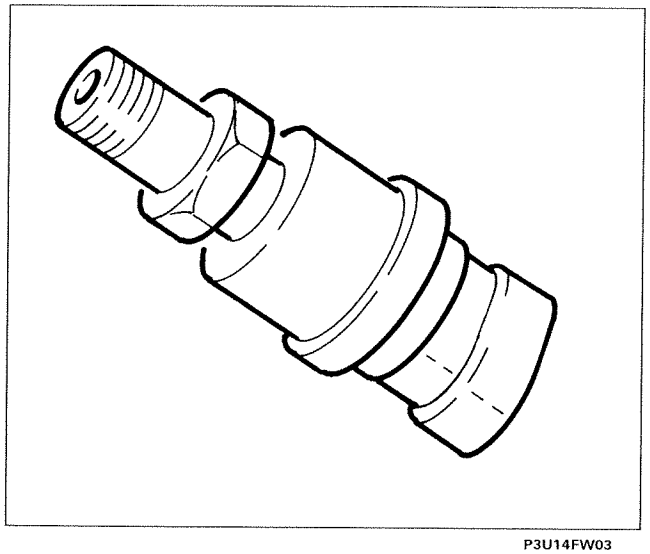

P3U14FW03

FUEL PRESSURE SENSOR

This sensor is fitted in the centre of the fuel supply manifold (rail) and has the task of providing the injection control unit with a feed back signal for:

- regulating the injection pressure;
- regulating the duration of the injection.

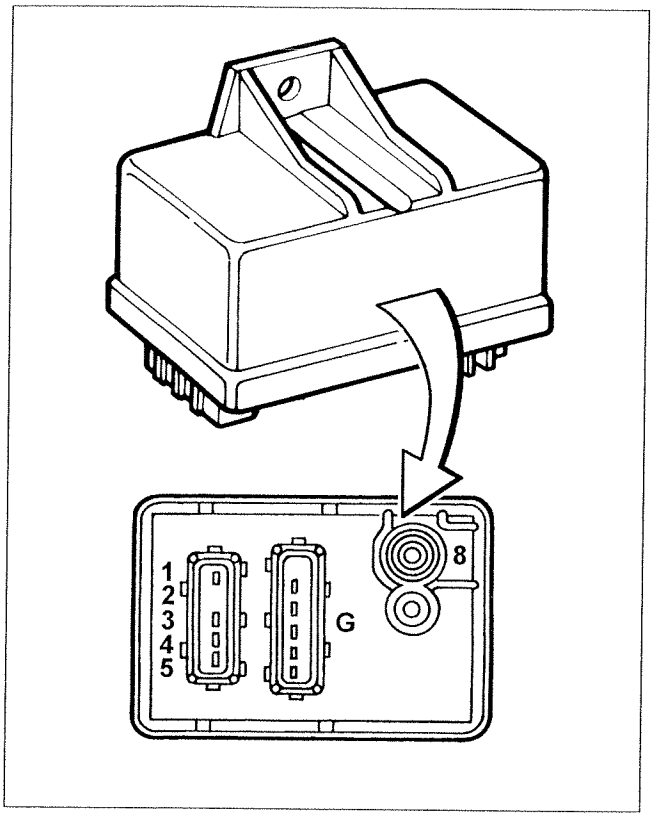

P3U15FW01

HEATER PLUGS CONTROL UNIT

The operation of the heater plugs takes place via the heater plugs control unit under the direct control of the injection control unit.
Inside the heater plugs control unit there is an "intelligent" relay which sends a feed back response to the injection control unit which is thereby informed of any failure in the heater plugs control unit or short circuit to earth of the heater plugs.

The diagram illustrates the connectors at the base of the heater plugs control unit and the pin-out:

1. Earth
2. Not connected
3. Injection control unit (pins 3-38)
4. Injection control unit (pins 3-51)
5. Injection control unit (pins 2-1)
8. Battery positive (+30)
G. Heater plugs

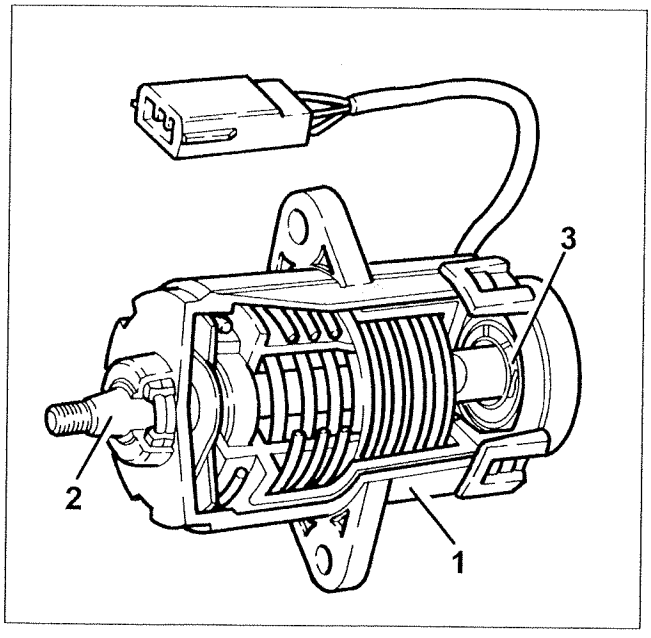

P3U15FW02

ACCELERATOR PEDAL POTENTIOMETER

The position of the accelerator pedal is transformed into an electrical voltage signal and sent is to the injection control unit by the potentiometer connected to the pedal.
The accelerator pedal position signal is processed together with the information on the number of revs to obtain the injection times and pressure.
The sensor is made up of a casing (1) fixed to the pedals by means of a flange, inside which there is a shaft (2), in an axial position, connected to the two potentiometers (3): one main one and one safety one.
There is a coil spring on the shaft which guarantees the correct resistance to the pressure, whilst a second spring ensures the return on release.

Copyright by Fiat Auto

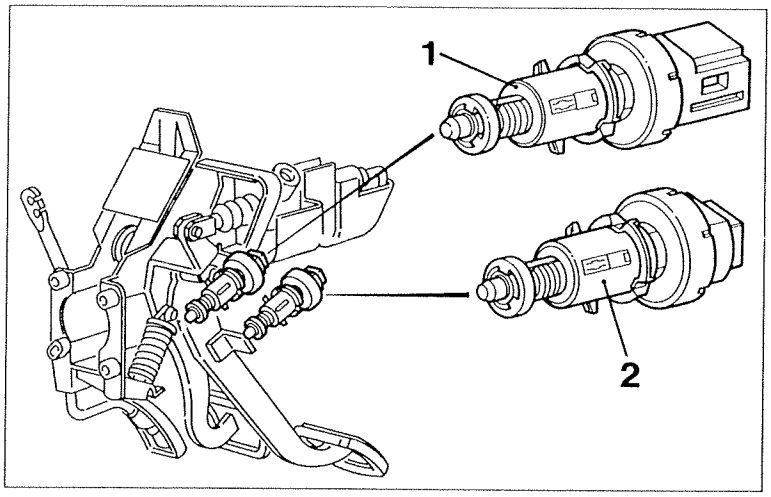

P3U16FW01

BRAKE PEDAL SWITCH

There is a switch (1) on the brake pedal which operates the brake lights; this switch sends a signal to pin 2-8 of the injection control unit.

The "brake pedal pressed" signal is used by the control unit to:

- understand that there is a deceleration situation;
- check the plausibility of the signal coming from the accelerator potentiometer.

CLUTCH PEDAL SWITCH

There is a switch (2) on the clutch pedal connected to pin 2-2 of the injection control unit.
The "clutch pedal operated" signal is used by the injection control unit to differentiate between gear engaged and gear change conditions.

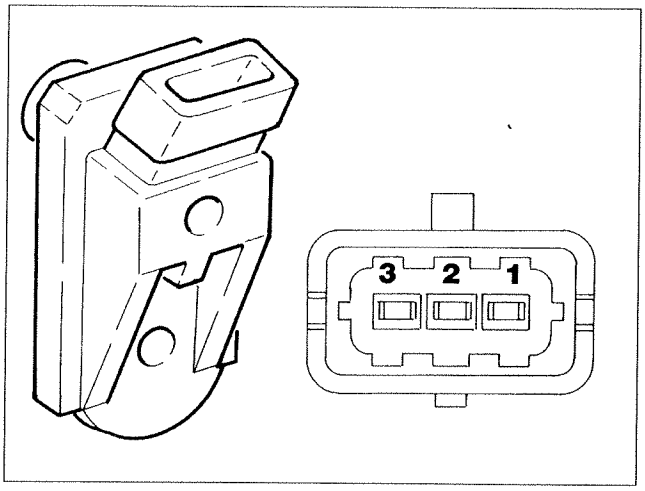

P3U16FW02

EXCESS PRESSURE SENSOR

This sensor is fitted on the inlet manifold and the signal transmitted to the injection control unit is used for:

- regulating the injection pressure;
- regulating the duration of the injection.

The diagram at the side shows the sensor and the electrical connector with the pin-out:

1. Pressure signal
2. Earth
3. Supply

ATMOSPHERIC PRESSURE SENSOR

The atmospheric pressure sensor is inside the injection electronic control unit and is designed to measure the atmospheric pressure in order to correct the air flow rate measured and the reference air flow rate for controlling the EGR function.

FUEL SUPPLY CIRCUIT

The fuel supply circuit is divided, in terms of operation, into a low pressure circuit and a high pressure circuit.
The low pressure circuit is made up of a tank, multi-purpose valve, auxiliary electric pump immersed in the tank and a return manifold.
The high pressure circuit is made up of a radial jet pressure pump, supply manifold and injectors.

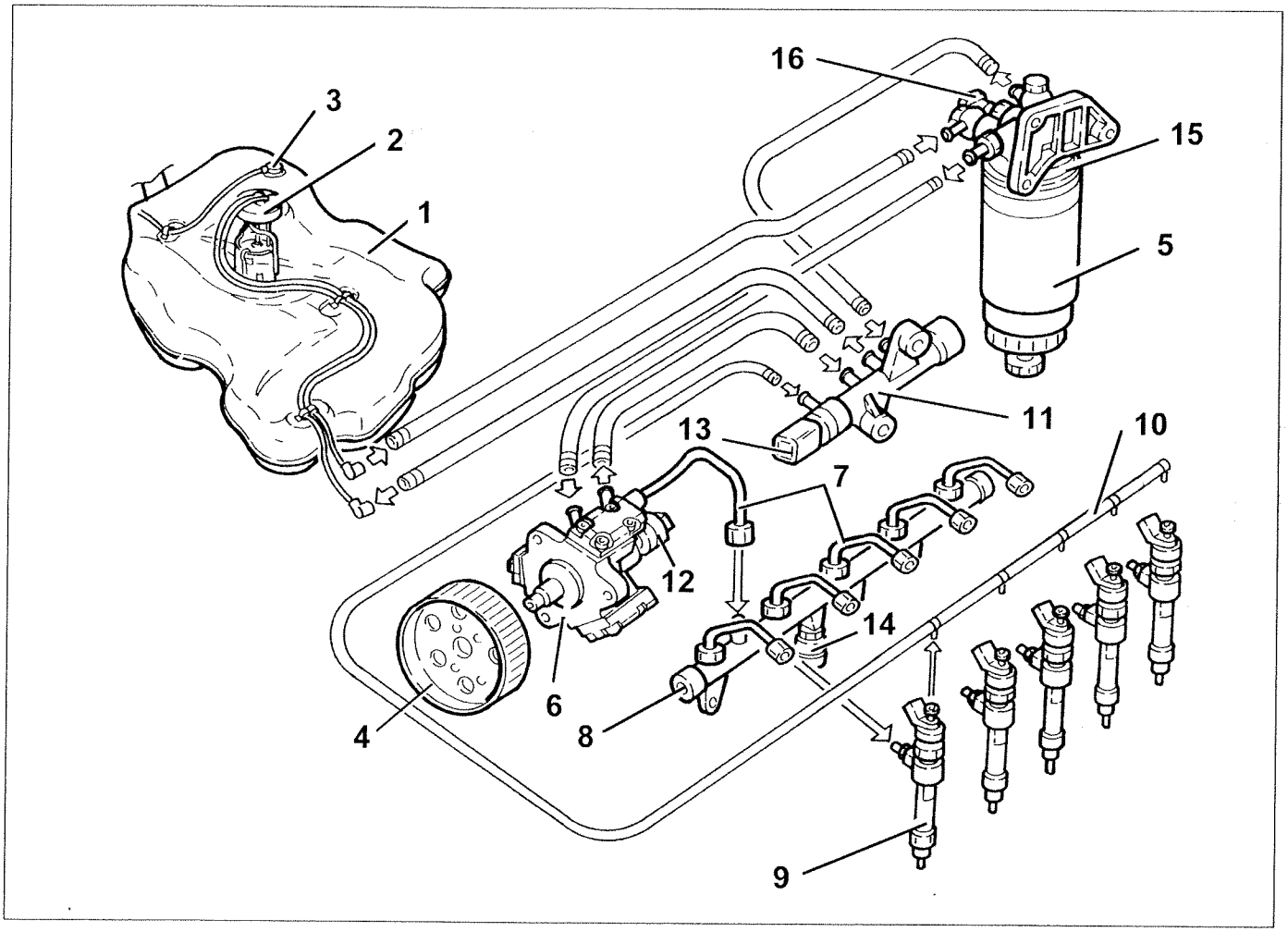

P3U17FW01

1. Fuel tank
2. Immersed (auxiliary) electric pump assembly complete with fuel gauge
3. Multi-purpose valve
4. Pressure pump drive pulley
5. Diesel filter cartridge
6. Pressure pump
7. High pressure pipes
8. Supply manifold (rail)
9. Injectors
10. Fuel recirculation pipe (return from the injectors)
11. Return manifold
12. Pressure regulator
13. Fuel temperature sensor
14. Fuel pressure sensor
15. Diesel heater
16. Thermal switch

Copyright by Fiat Auto

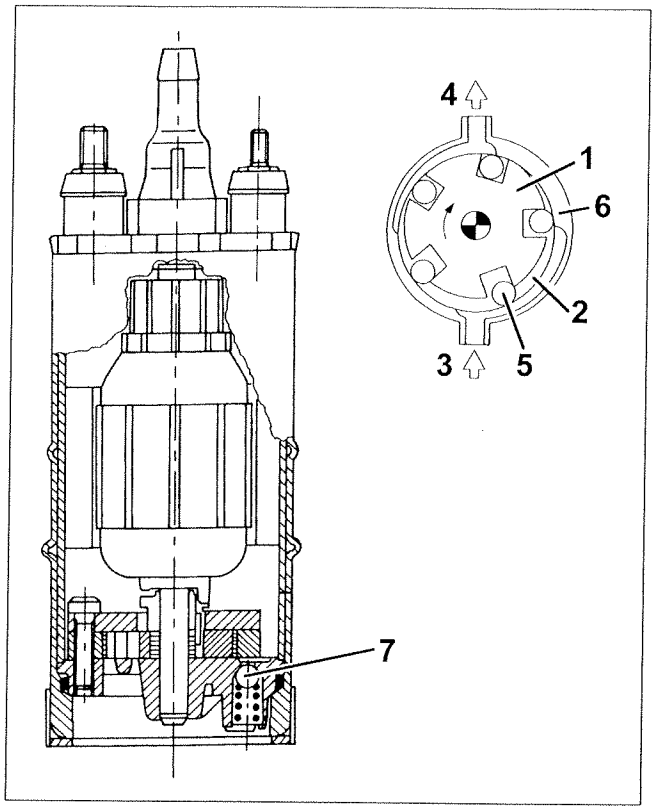

P3U18FW01

1. Impeller
2. Volumes
3. Inlet port
4. Outlet port
5. Rollers
6. Outer seal
7. Excess pressure valve

IMMERSED (AUXILIARY) ELECTRIC PUMP ASSEMBLY AND OPERATION OF FUEL GAUGE

The assembly basically comprises:
- a roller type electric pump;
- a fuel gauge;
- a fuel filter

The electric pump immersed in the fuel is the volumetric, roller type with a motor with brushes and permanent magnet winding.

The impeller (1) rotates, driven by the electric motor, creaating volumes (2) which move from the inlet port (3) to the outlet port (4).

These volumes are defined by the rollers (5) which, during the rotation of the motor, adhere to the outer seal (6).

The electric pump has two valves: one single-acting valve to prevent the fuel circuit from being drained (when the pump is not working); the second excess pressure valve (7) which recirculates the supply with the inlet when the pressure exceeds 5 bar.

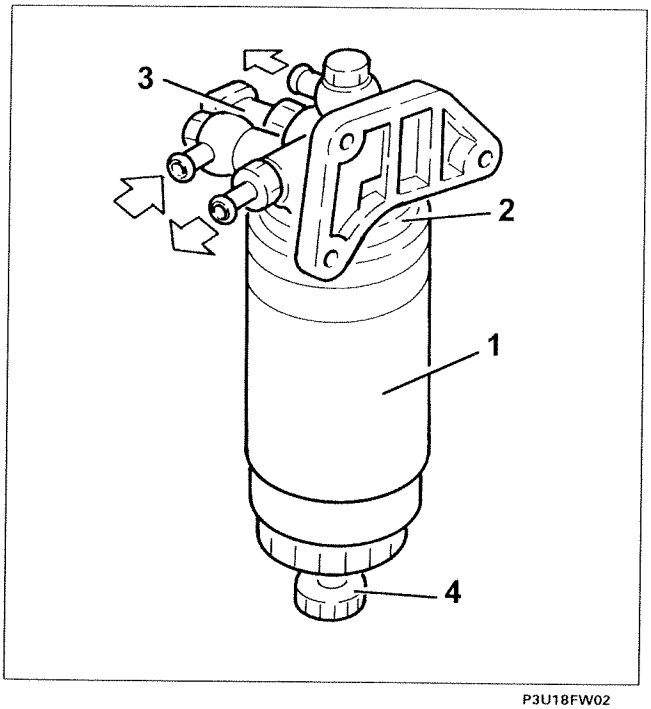

P3U18FW02

FUEL FILTER

The fuel filter is located in the engine compartment, fixed to the inlet manifold.

The filter is the cartridge type with a filter element (1) made up of a pack of paper discs with a filtering surface of around 5300 cc and a filtering grade 4 - 5 mm.

The filter is fitted with a fuel pre-heating device (2) operated by a thermal switch (3) fitted on the actual filter.
When the temperature of the diesel fuel is below 6 °C, an electrical resistance heats it up to a maximum of 15 °C before sending it to the pressure pump.
There is a plug (4), at the base of the fuel filter cartridge, for draining the water.

1. Filter cartridge
2. Diesel pre-heating device
3. Thermal switch
4. Water drain plug

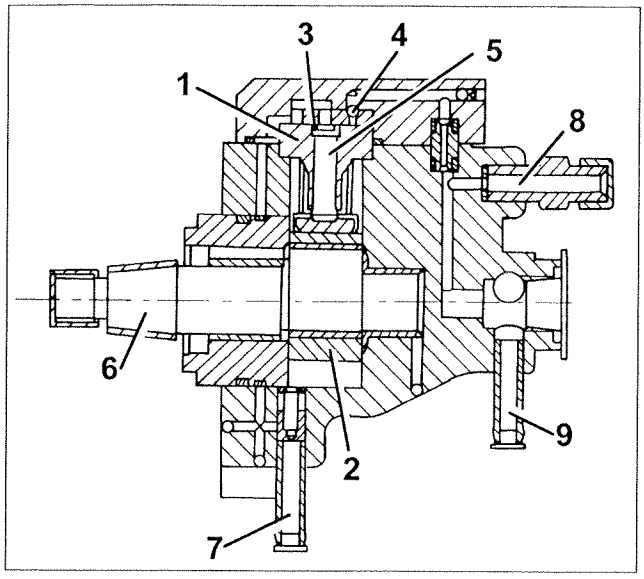

P3U19FW01

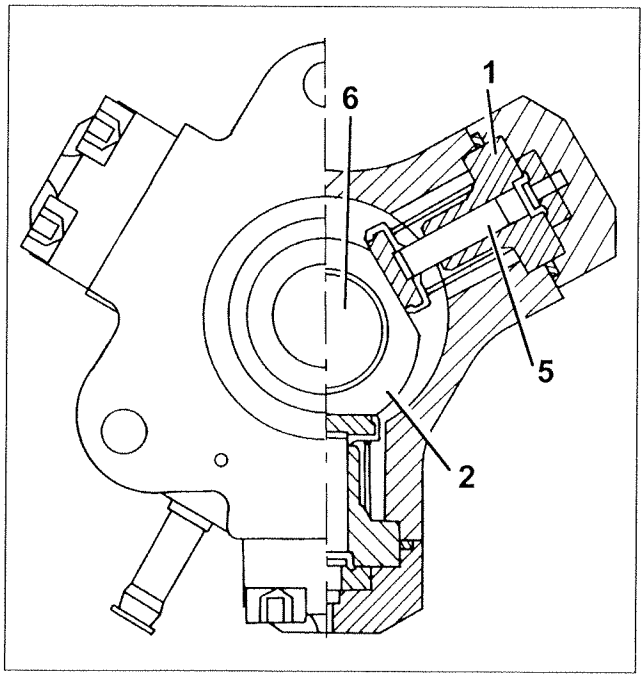

P3U19FW02

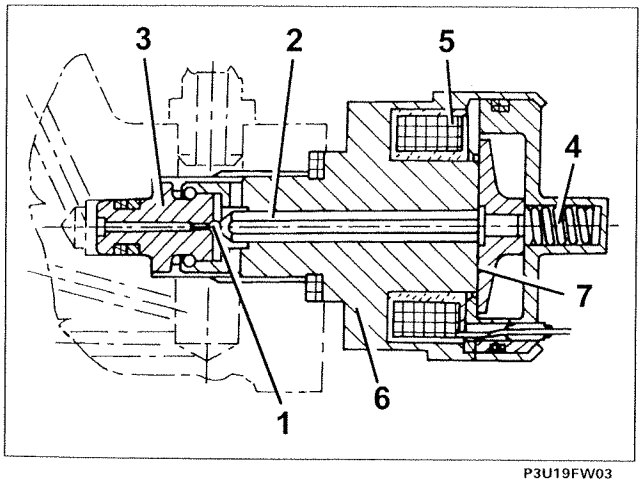

P3U19FW03

PRESSURE PUMP

The pressure pump is the radial jet type with three radial pistons (total capacity 0.657 cc) and is operated by the timing belt without timing obligations.

Each pumping unit comprises:

- a piston (5) operated by a cam (2) fixed to the pump (6) shaft;
- an inlet valve with shim (3);
- a supply ball valve (4).

The pressure pump must receive a pressure of at least 0.5 bar; for this reason the fuel system is fitted with an auxiliary electric pump immersed in the tank.

The pressure pump is lubricated and cooled by the actual diesel fuel via suitable ducts and it is has a maximum pressure output of 1350 bar.

1. Cylinder
2. Cam
3. Inlet valve with shim
4. Supply ball valve
5. Piston
6. Pump shaft
7. Low pressure diesel inlet connector from fuel filter
8. High pressure diesel supply connector to the manifold (rail)
9. Low pressure diesel supply recirculation connector

FUEL PRESSURE REGULATOR

The fuel pressure sensor is fitted on the pressure pump and is operated directly by the injection control unit, regulating the supply pressure of the fuel to the injectors.

The pressure regulator is basically made up of the following components:

1. Ball shutter
2. Pin
3. Valve
4. Pre-loading spring
5. Coil
6. Casing
7. Element

Copyright by Fiat Auto

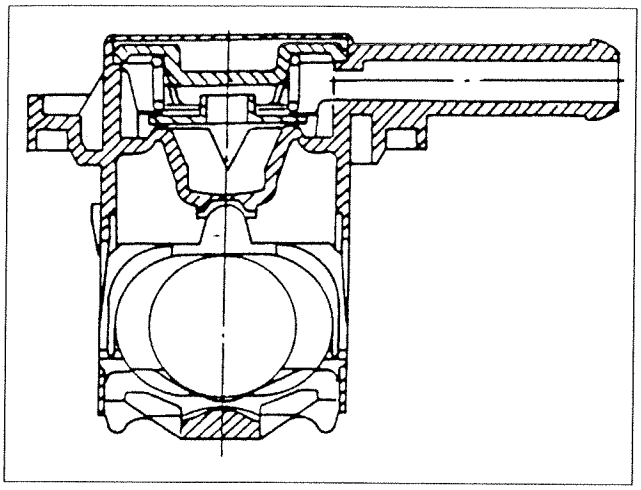

P3U20FW01

MULTI-PURPOSE VALVE

The multi-purpose valve is located on the fuel tank and carries out the following tasks:

- pressurizing the tank
- ventilation
- seal in the case of overturning

Pressurizing the tank

The pressure in the tank is kept at between 55 and 75 bar by means of a small valve resting on the edge.

This value is supported with a steel shim and opposed by a spring.

When the pressure in the tank exceeds the recommended figure, it overcomes the resistance of the spring and allows the valve to lift up, thereby allowing the flow of vapours.

When the pressure returns to the correct values, the valve closes.

Ventilation

In certain vehicle operating conditions, a vacuum may form in the tank as a result of:
- thermal variations;
- fuel consumption.

The function of the valve, in this case, is to restore the pressure inside the tank through the intake of air.

Any problem with this function can cause irregular engine operation or result in the vehicle stopping on account of problems with the supply to the pump.

Seal in the case of overturning (roll-over)

The roll-over function is to prevent fuel escaping from the tank if the vehicle overturns or is at an extreme angle.
During normal operation (bends, accelration, braking, etc.) there could be splashing with fuel possibly coming out.
The extreme sensitivity of this valve to roll-over prevents any fuel from escaping.

SUPPLY MANIFOLD (RAIL)

The supply manifold (rail) is fitted on the cylinder head, inlet side.

With a volume of about 33 cc it dampens the fuel pressure oscillations due mainly to:
- the operation of the pressure pump;
- the opening of the injectors.

The fuel pressure sensor is fitted at the centre of the supply manifold.
There are special steel pipes for the (high pressure) hydraulic connections.

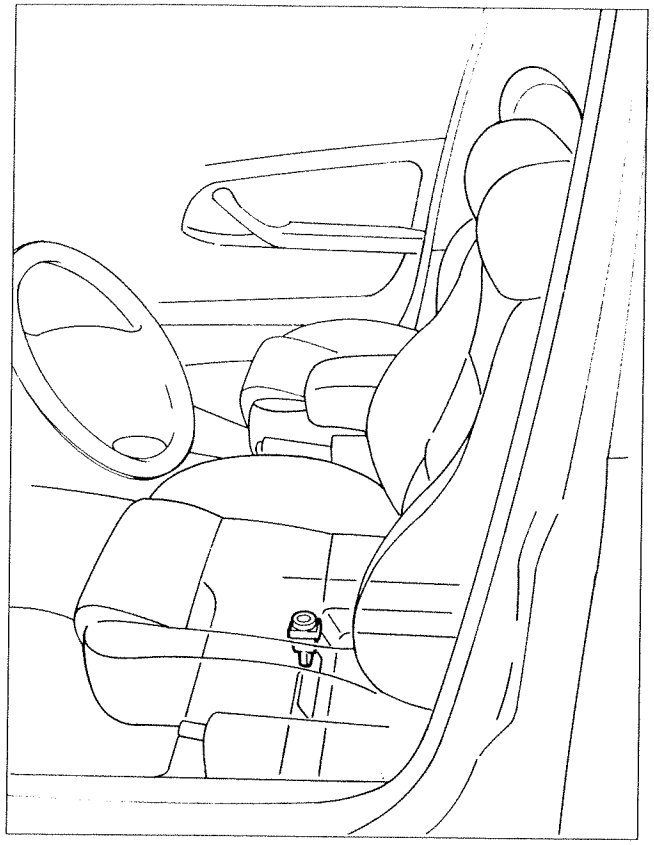

P3U37EW01

INERTIA SAFETY SWITCH

In order to improve the safety of the vehicle occupants in the case of impacts, the vehicle is equipped with an inertia switch located inside the passenger compartment, under the driver's seat on the right hand side.

This sensor reduces the risk of fire (as a result of fuel escaping) by de-activating the auxiliary electric pump which supplies the injection circuit.

The inertia switch is made up of a steel ball fitted in a (conical shaped) housing, kept in position by the attraction force of a permanent magnet.

In the case of a violent impact to the vehicle, the ball is released by the magnetic clip and opens the normally closed (N.C) electric circuit, interrupting the connection to earth of the auxiliary electric pump and the consequent supply to the injection system.

To restore the connection to earth for the auxiliary electric pump it is necessary to move back the seat and press the switch until it is heard to click.

After even an apparently slight impact, if there is a smell of fuel or there are leaks from the fuel system, do not switch the inertia switch back on, but search for the problem first and remedy it to avoid the risk of fire.

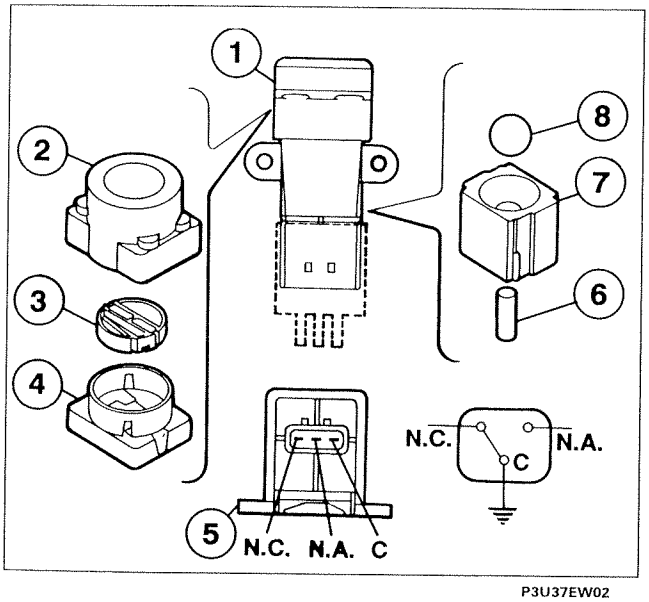

P3U37EW02

Inertia switch components

1. Complete inertia sensor
2. Outer casing
3. Button
4. Upper side
5. Engagement side
6. Permanent magnet
7. Permanent magnet housing
8. Steel ball

C Joint terminal
N.C. Contact normally closed
N.A. Contact normally open

Copyright by Fiat Auto

AIR SUPPLY CIRCUIT

The air supply circuit is supercharged by a variable geometry GARRET turbocharger and intercooler.

The turbocharger is the reduced inertia type, designed with a new supercharging concept where the use of the turbocharger is aimed at increasing torque in the most frequently used range (e.g. at low speeds).

After having passed through the filter (1), the intake air is compressed by the turbocharger (4) operated by exhaust gases, cooled by the heat exchanger (intercooler) (5) and sent to the inlet manifold (6) from where it is distributed to the cylinders.

Diagram showing air supply circuit

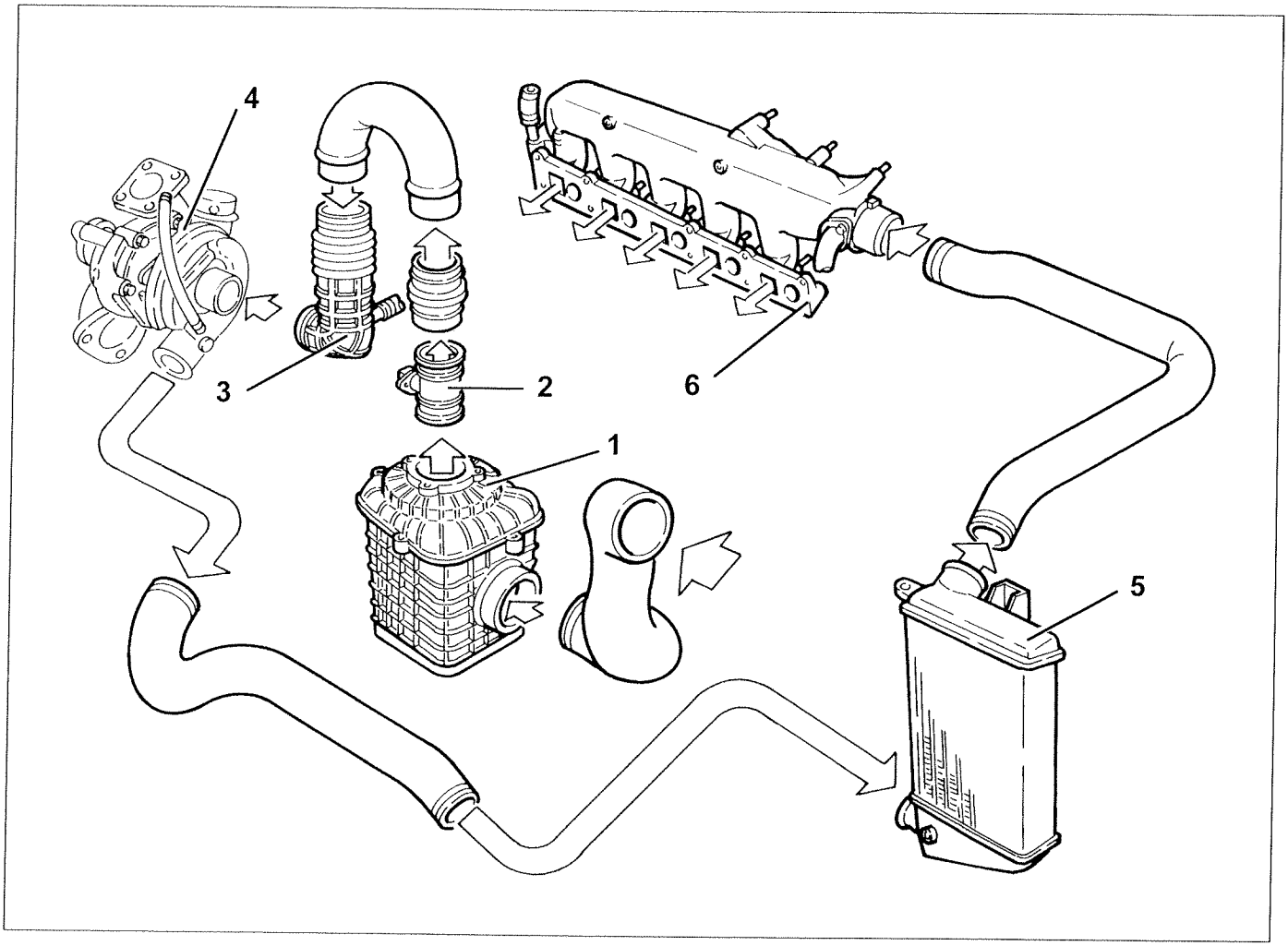

P3U22FW01

1. Complete air filter
2. Intake air flow meter (flow meter)
3. Hose
4. Turbocharger
5. Air-air heat exchanger (intercooler)
6. Inlet manifold

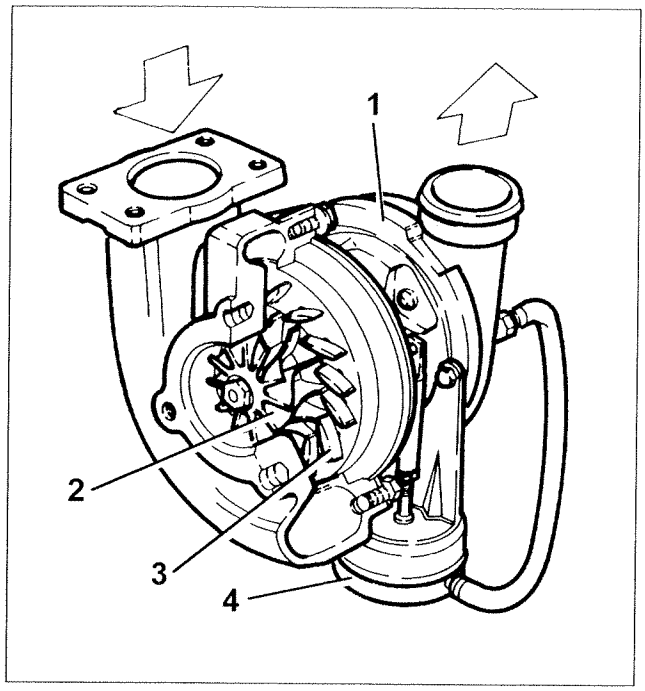

P3U23FW01

TURBOCHARGER

The turbocharger is the variable geometry type and is connected to the exhaust manifold and has the task of increasing the thermal efficiency of the engine.

The variable geometry turbocharger is basically made up of the following components:
- a centrifugal compressor (1);
- a turbine (2);
- a series of moving vanes (3);
- a pneumatic actuator (4) for operating the moving vanes.

The control of the speed (kinetic energy) of the exhaust gases makes it possible to have:
- greater engine torque at low speeds;
- greater max power at high speeds.

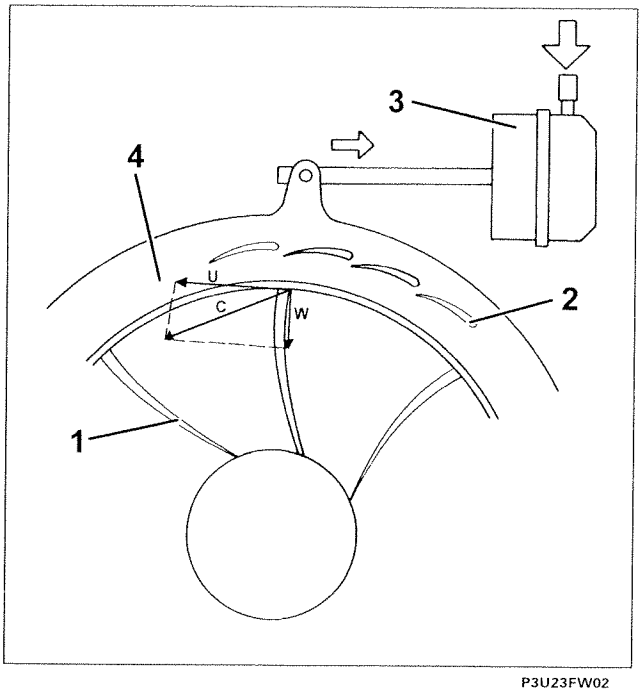

P3U23FW02

1. Turbine
2. Moving vanes
3. Pneumatic actuator
4. Rotor seal

Operation at low rotation speeds

When the engine is operating at low speeds, the exhaust gases possess a small amount of kinetic energy: under these circumstances a conventional turbine rotates slowly providing a limited supercharging pressure.

In the variable geometry turbine (1), on the other hand, the moving vanes (2) are in the maximum closed position and the small sections between the vanes increase the speed (C) of the inlet gases.

Greater inlet speeds involve greater peripheral speeds (U) of the turbine and consequently the compressor.

The speed of the gases inside the impeller is shown in the diagram by the vector (W).

Copyright by Fiat Auto

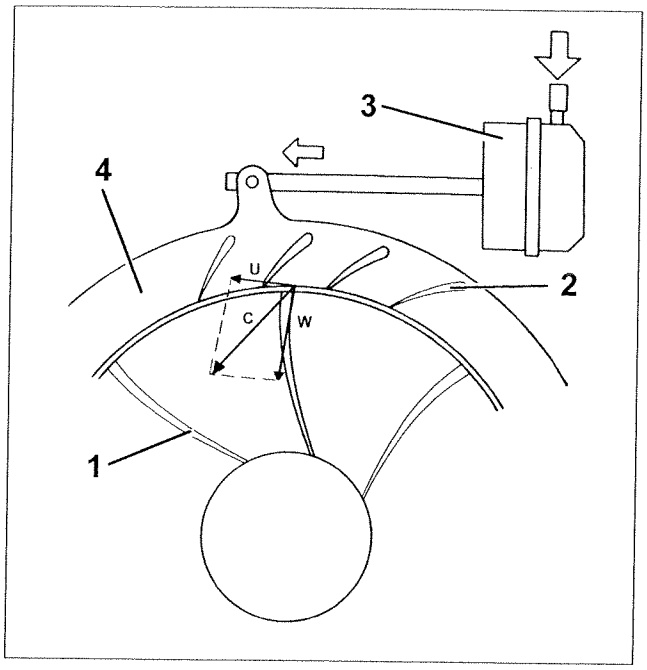

P3U24FW01

1. Turbine
2. Moving vanes
3. Pneumatic actuator
4. Rotor seal

Operation at high rotation speeds

When the engine rotation speed is increased, there is a gradual increase in the kinetic energy of the exhaust gases.
As a result the speed of the turbine (1) increases and consequently also the supercharging pressure acting on the actuator (3)

By means of a rod, the actuator (3) opens the moving vanes (2) according to the supercharging pressure, until the maximum opening position is reached.

There is therefore an increase in the sections and a consequent slowing down of the flow of exhaust gases passing through the turbine (1) at speeds which are the same as or slower than during the low speed conditions.

The speed of the turbine (1) decreases settling down at a suitable value for the correct operation of the engine at high speeds.

EXHAUST GAS CIRCUIT

The exhaust gases flow through the manifold to the turbocharger and, through a pipe, to the catalytic converter and then to the silencer.
Special protection limits the heat radiated towards the bodyshell.

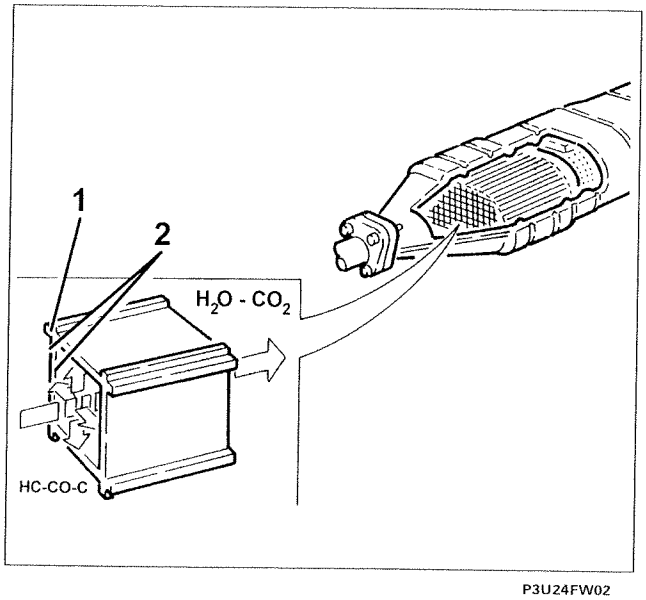

P3U24FW02

CATALYTIC CONVERTER

The catalytic converter is a post-treatment device to oxidize the CO, HC and particles, tranforming them into carbon dioxide (CO2) and water vapour (H2O).

The catalyzer is made up of a ceramic honeycomb structure (1) whose cells are impregnated with platinum (2), a substance which acts as a catalyst for the oxidation reactions.

The exhaust gases which pass through the cells heat the catalyzer, triggering off the conversion of the pollutantsinto inert compounds.

The chemical reaction of oxidizing the CO, HC and particles is effective at temperatures of between 200 °C and 350 °C.

Above 350 °C the sulphur contained in the diesel fuel starts to oxidize, producing sulphur dioxide and other sulphur compounds.

EXHAUST GAS RECIRCULATION CIRCUIT (EGR - Exaust Gas Recirculation)

This system makes it possible to send some of the exhaust gases to the inlet in certain engine operating conditions.

By doing this the fuel mixture is diluted with inert gases lowering the peak temperature in the combustion chamber; this contains the formation of nitrogen oxides (NOx), producing a reduction of 30÷50% at the exhaust.

The recirculation of the burnt gases is only possible at medium-low loads, when the air/fuel raio is very high and the operation of the engine is not penalized by the presence of inert gases in place of air.

The recirculation is controlled by the injection control unit (1) which basically operates on signals from the accelerator pedal potentiometer, the rpm sensor and the engine coolant temperature sensor, providing the output signal for operating the modulating valve (2).

The latter, connected to the atmosphere by means of a filter (3), transmits a lesser or greater vacuum, coming from the brake servo vacuum pump (5), to the EGR valve (4), depending on the command signal received.

If the vacuum is sufficient, the valve (4) opens placing the exhaust manifold in contact with the inlet manifold.

Diagram showing exhaust gas recirculation circuit

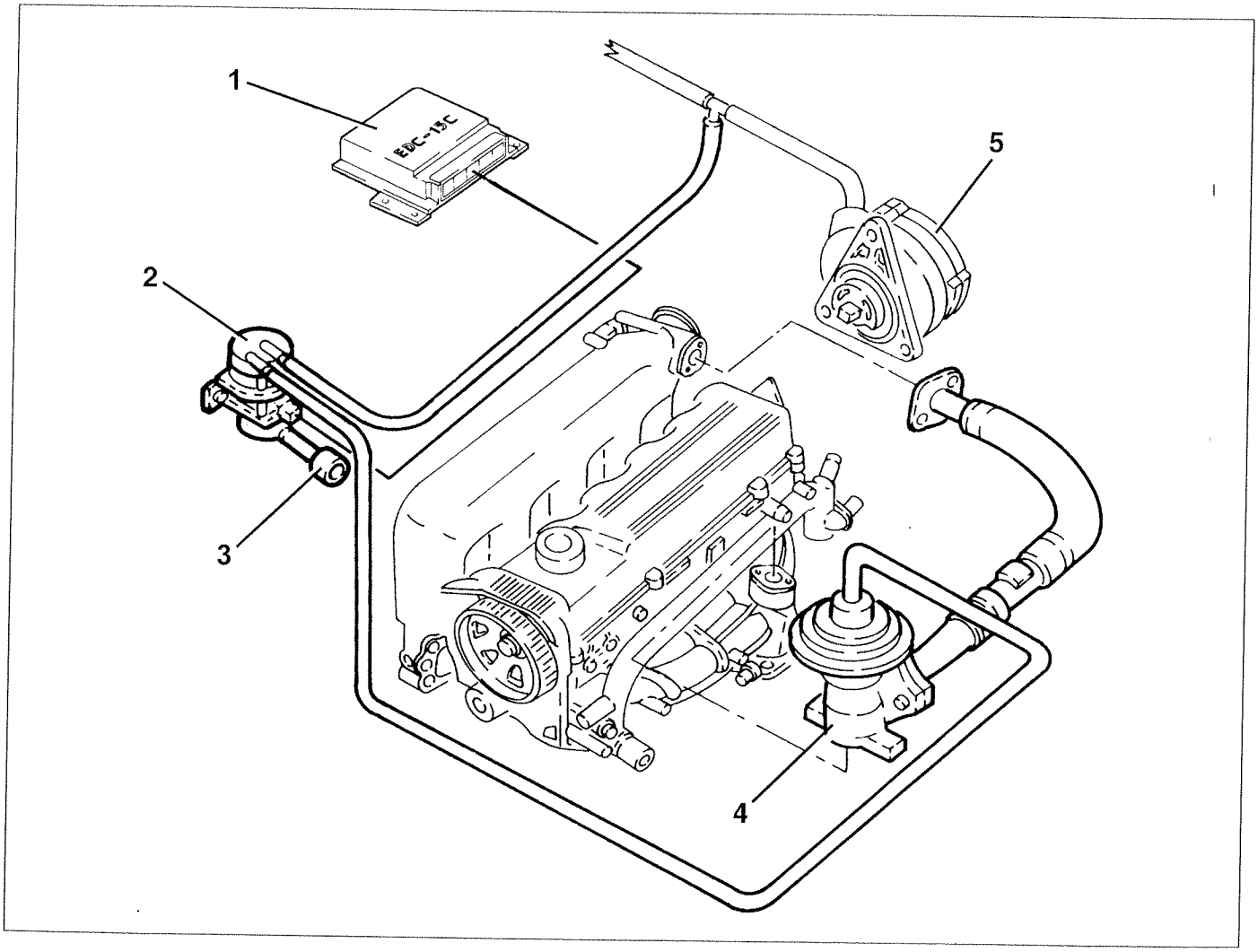

P3U25FW01

Copyright by Fiat Auto

E.G.R. MODULATING VALVE

The vacuum coming from the brake servo vacuum pump reaches the chamber (E) from the duct (F) (case I), because the force of the spring (6) acts on the moving element (4) and the valve (5) allows it to pass.

Via the compensation port (D), the vacuum then affects the chamber (B) and the surface of the disc shutter (3).

When the forces acting on the disc (3) are balanced, the atmospheric pressure in the duct (A) enters the chamber (B), moving the moving element downwards (case II), so thatthevalve (5) shutter closes the duct (F) and places chamber (E) in contact with chamber (C) at atmospheric pressure, decreasing the value of the vacuum in the duct (E).

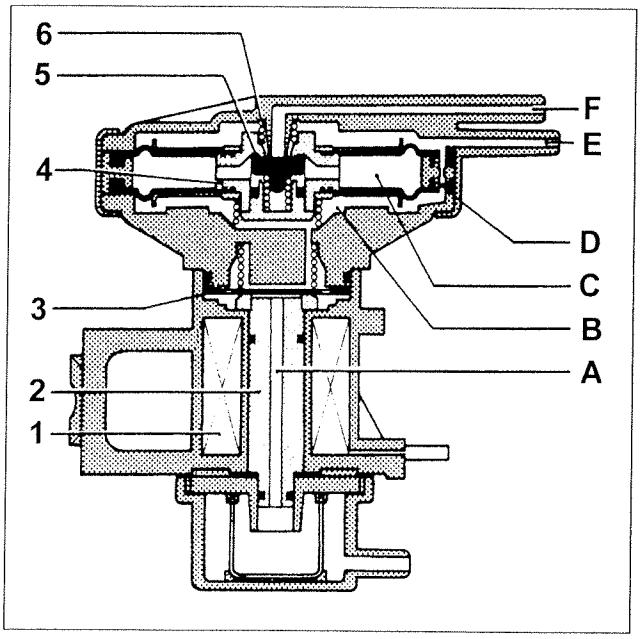

P3U26FW01

The decreased vacuum value or the increase in the absolute pressure in the chamber (E) raises the moving element (4) (case I), closing the port (C) and placing the valve (5) in the ideal position (E in contact with F) to repeat the cycle.

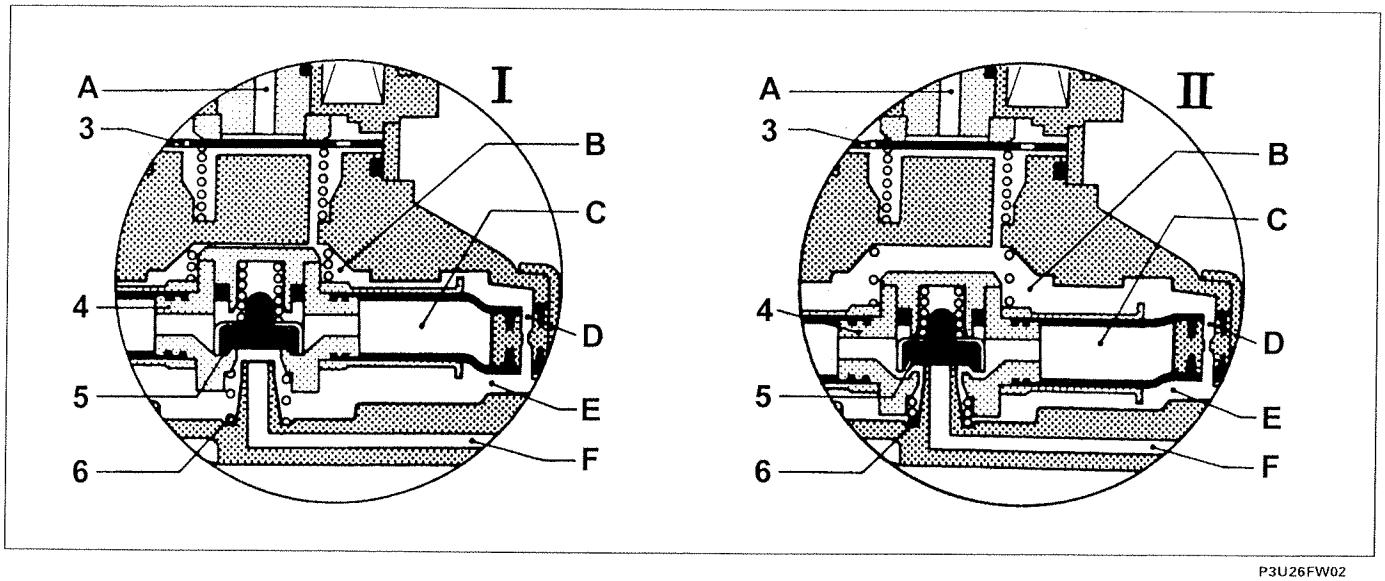

P3U26FW02

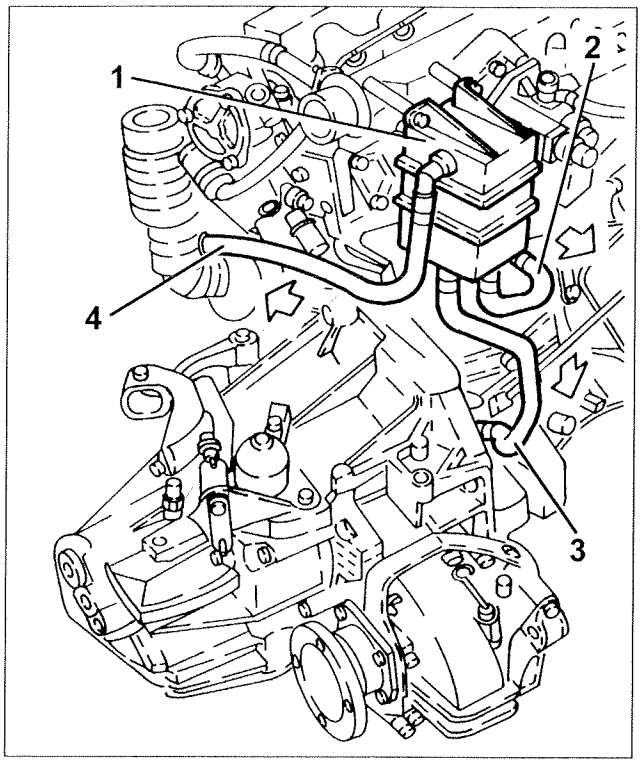

P3U27FW01

RECIRCULATION CIRCUIT FOR VAPOURS COMING FROM THE CRANKCASE (BLOW--BY)

The engine crankcase emissions are made up of mixtures of air/diesel fuel and burnt gases which escape through the piston seals in addition to lubricant oil vapours.

These are defined as blow-by or breather gases.

The breather gases coming from both the crankcase and the cylinder head reach the separator (1) via the pipe (2).

In the separator (1) the gases lose part of the oil dissolved in them which returns to the sump via the pipe (3) in the form of droplets.

The remaining gases, on the other hand, pass through the pipe (4) and are directed to the inlet circuit.

Copyright by Fiat Auto

page

REPLACING AUXILIARY BELT

- Removing-refitting auxiliary drive-belt 1

REPLACING TIMING BELT

- Removing-refitting timing belt 3

REMOVING-REFITTING CYLINDER HEAD

- Removing-refitting cylinder head 7

Copyright Fiat Auto

COPYRIGHT FIAT AUTO

The reproduction, even partial, of the text and illustrations is prohibited.

The information contained in this publication is purely indicative and could be out of date following modifications made by the Manufacturer, at any time, for technical or commercial reasons or in order to conform to legal requirements in the various countries.

Fiat Auto S.p.A.
D.M.C. - M.P.S.
Servizi Post Vendita - Tecnologie Assistenziali
Largo Senatore G.Agnelli, 5 - 10040 Volvera - To (Italia)
Publication no. 506.475/24 - Ottobre 1998 - 400
Printed by Satiz S.p.A. - Turin (Italy)
order no. 60446238

1

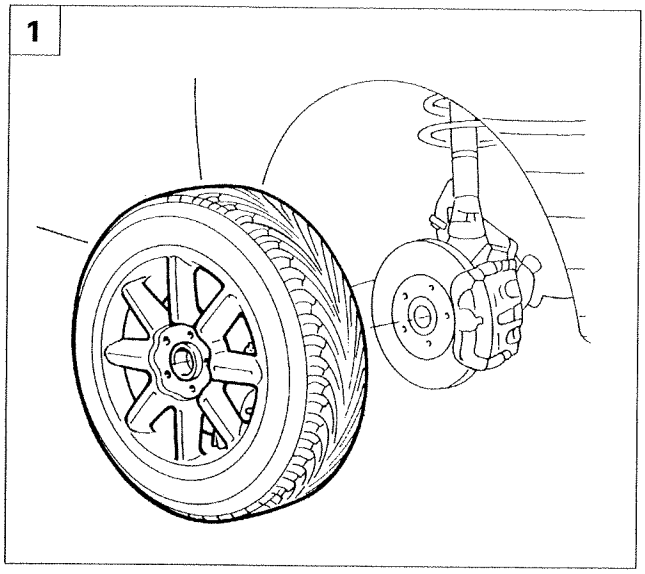

P3U01FJ01

2

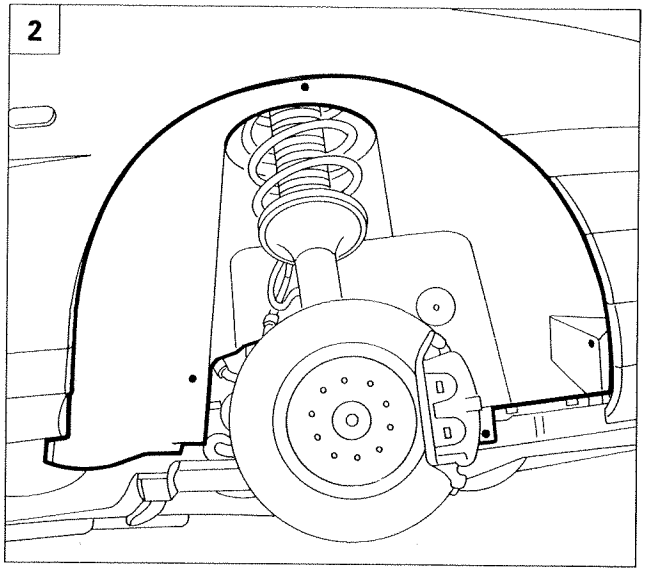

P3U09CJ02

3

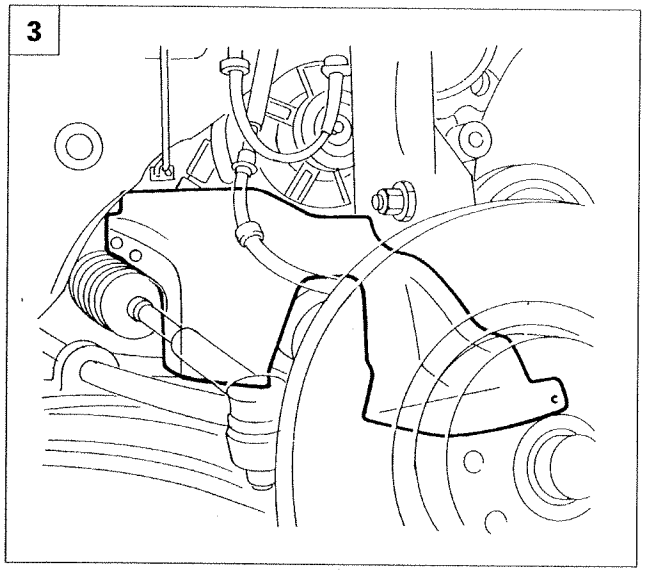

P3U01FJ02

4

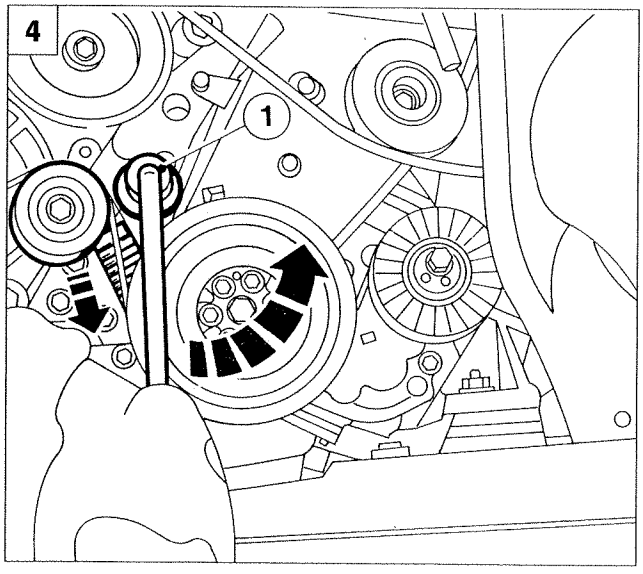

P3U11CJ01

REMOVING-REFITTING AUXILIARY DRIVEBELT

1. Place the vehicle on a lift and remove the right front wheel.
2. Remove the right wheel arch protection.
3. Remove the lower wheel compartment sound shield by unscrewing the retaining bolt.
4. Slacken belt tension by turning the automatic tensioner nut (1) anticlockwise

Check auxiliary drivebelt tension and condition and in particular for: cracks, tears, surface wear (shiny appearance), dry or hardened areas leading to loss of grip. Replace the belt as described below if one of these defects is present.

Copyright Fiat Auto

10.

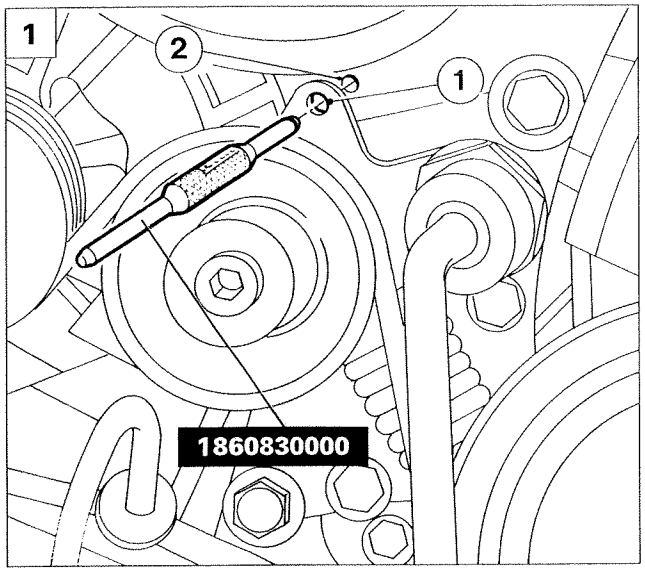

P3U10CJ02

1. Turn the tensioner until hole (1) on the tensioner is aligned with hole (2) on the bracket; then insert tool 1860830000 to secure the tensioner in this position.

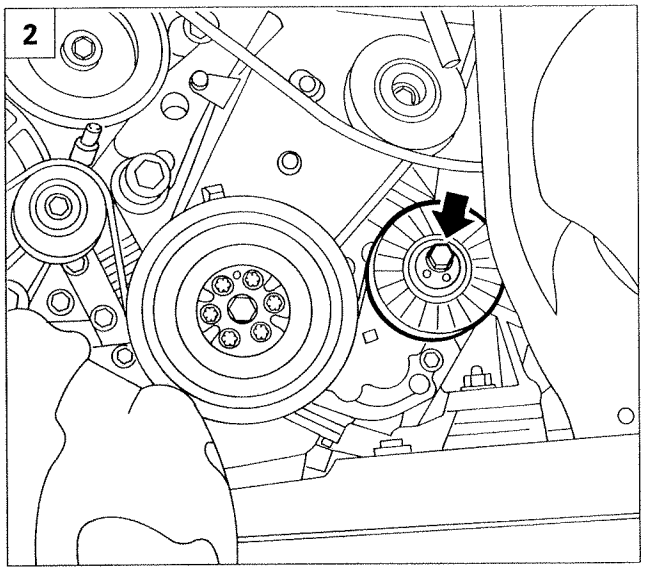

P3U11CJ02

2. Loosen tension in the mobile guide pulley by undoing the retaining bolt: then prise off the auxiliary drivebelt.

Refitting and tensioning auxiliary drivebelt

Prevent the belt coming into contact with oil or solvents which make the rubber less elastic and lead to loss of grip.

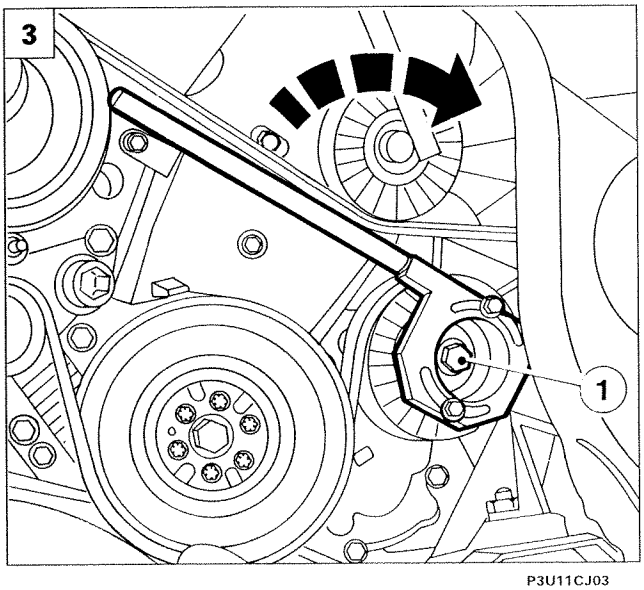

P3U11CJ03

3. Carefully fit the belt. Tension by positioning tools 1860826000 and 1860825000 in the holes on the mobile guide pulley (not locked). Turn the resulting lever upward using the tools until until pin 1860830000 fitted previously can be withdrawn easily. Tighten the mobile guide pulley retaining bolt in this position. The preloaded automatic tensioner spring will ensure belt tension is correct.

1

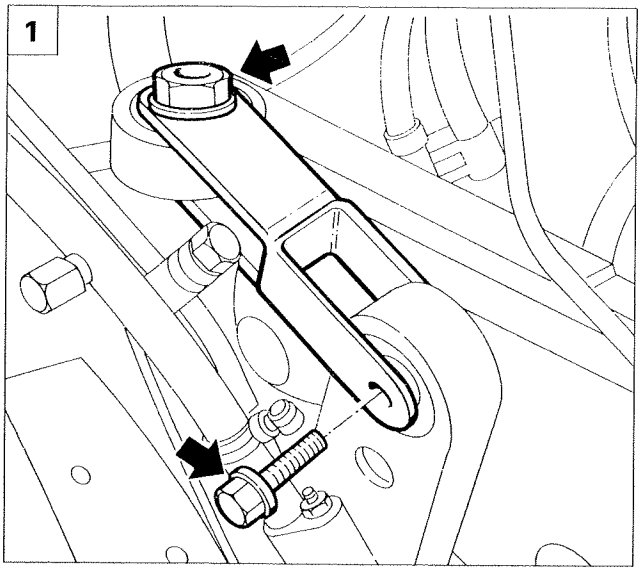

P3U12CJ01

2

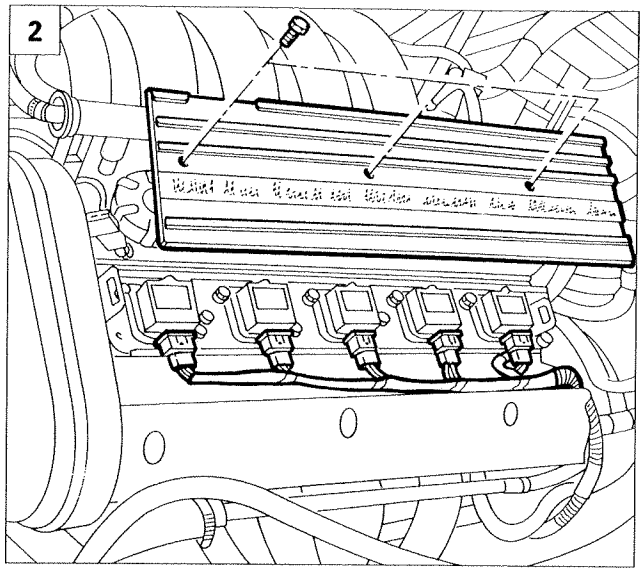

P3U04CJ05

3

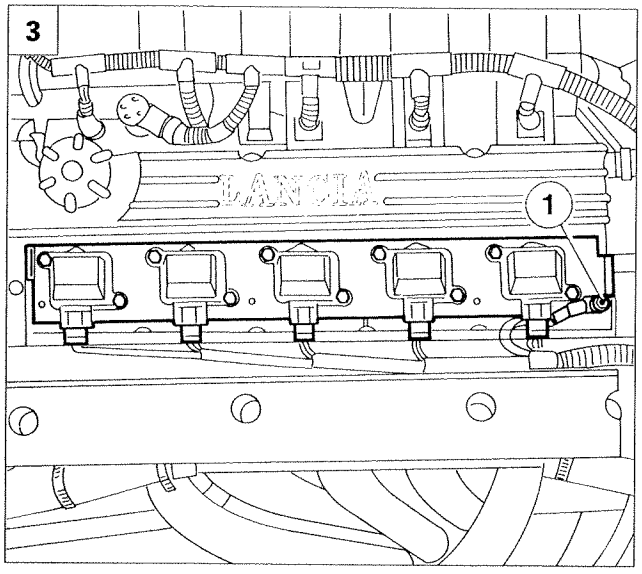

P3U12CJ04

4

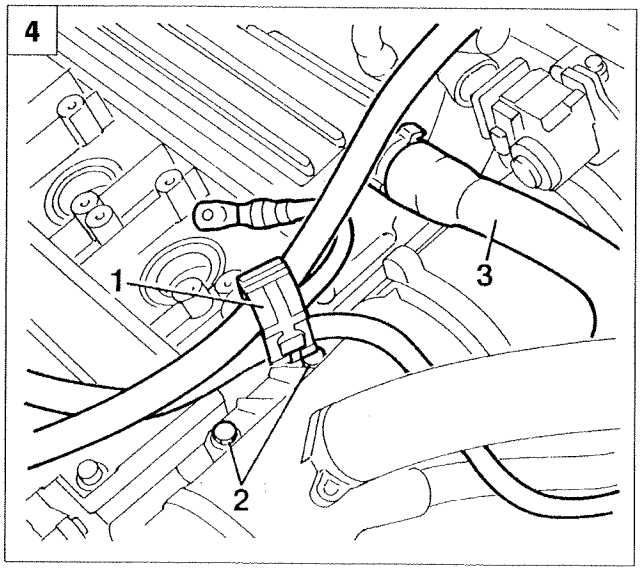

P3U03FJ01

REMOVING-REFITTING TIMING BELT

Before removing the timing belt, take off the auxiliary drivebelt as described in the previous paragraph.

1. Remove the reaction rod by undoing the bolts indicated. This operation is necessary in order to allow subsequent removal of the timing belt guard.

2. Removing the ignition coil protective cover.

3. Disconnect electrical connections from the ignition coils and earth lead (1), then prise up the wiring and remove the coils.

4. Open collar (1), then prise up the wiring and coolant lines; unscrew bolts (2) securing the engine air delivery line, then disconnect the oil vapour recovery line (3) from the cylinder head cover.

Copyright Fiat Auto

10.

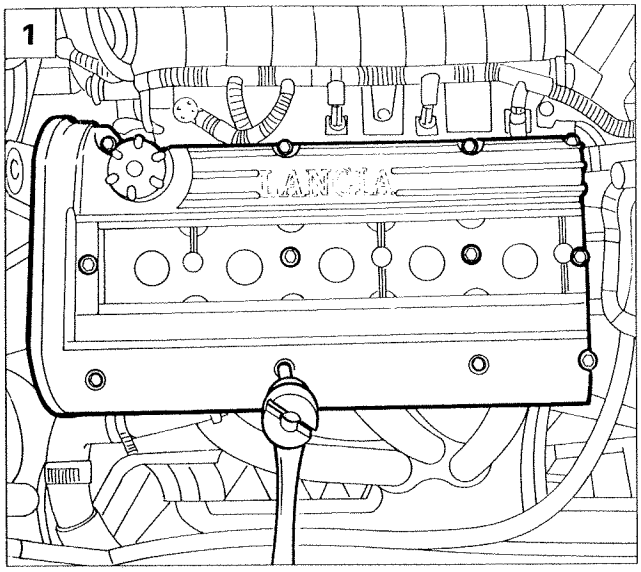

P3U15CJ04

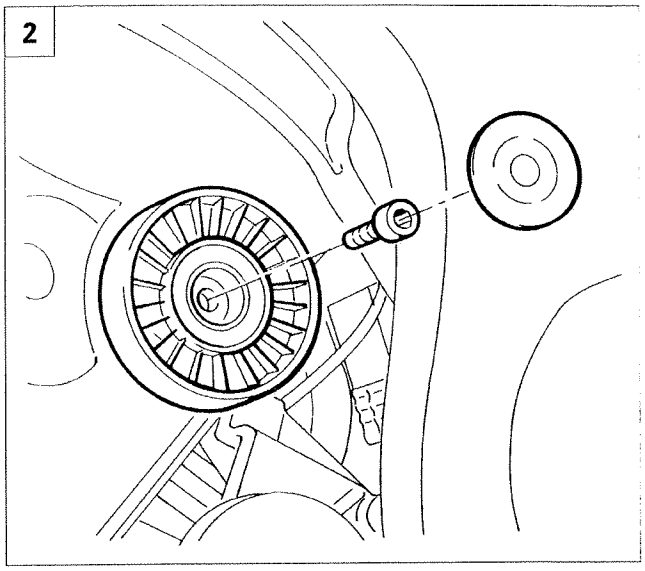

P3U04FJ01

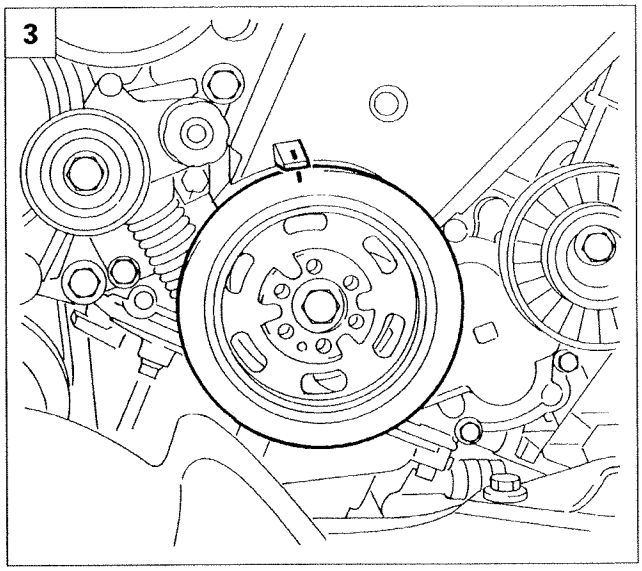

P3U04FJ02

1. Remove the cylinder head cover, use tool 1860833000 to unscrew the bolts.
2. Remove the auxiliary drivebelt idler pulley.
3. Turn the crankshaft (in its normal direction of rotation) until the notch on the auxiliary drive pulley is aligned with the notch on the timing belt guard. Check that cylinder no. 1 is in combustion phase.
4. Remove the timing belt guard.
5. Remove the auxiliary drive pulley, taking care not to turn the crankshaft.

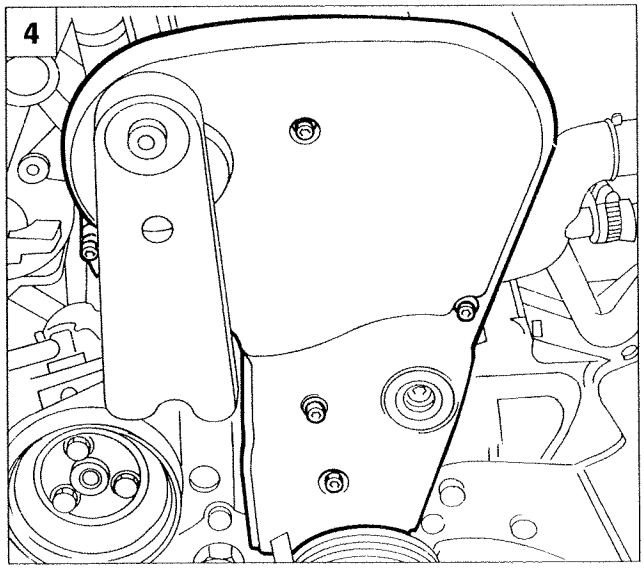

P3U12CJ02

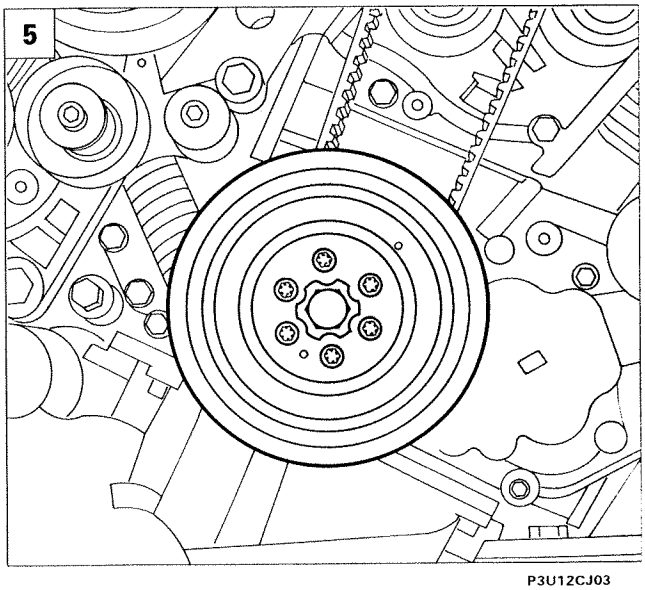

P3U12CJ03

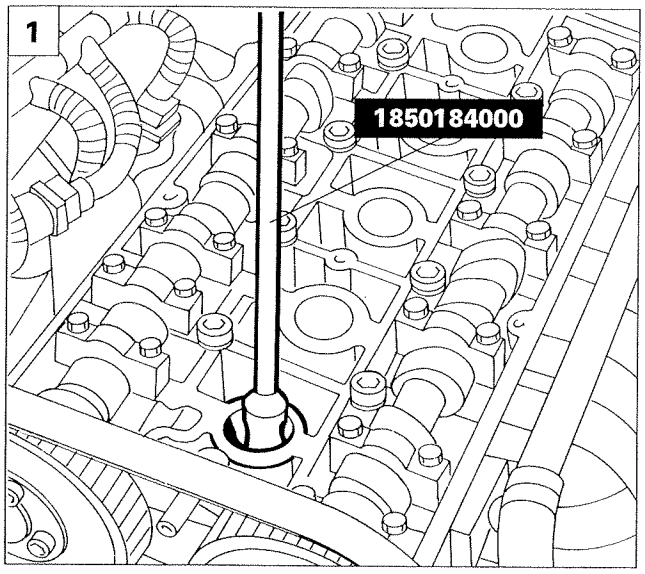

P3U15CJ06

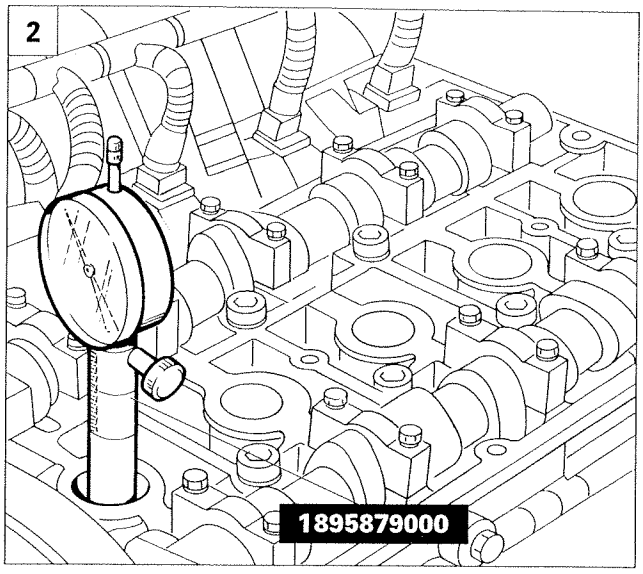

P3U15CJ07

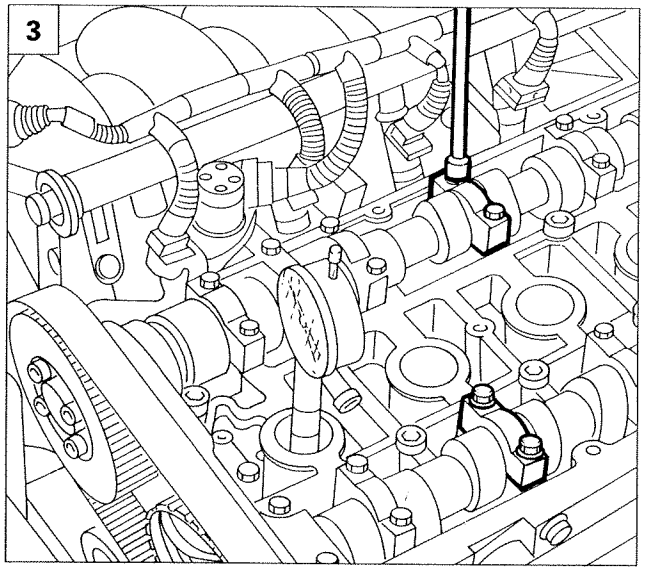

P3U15CJ08

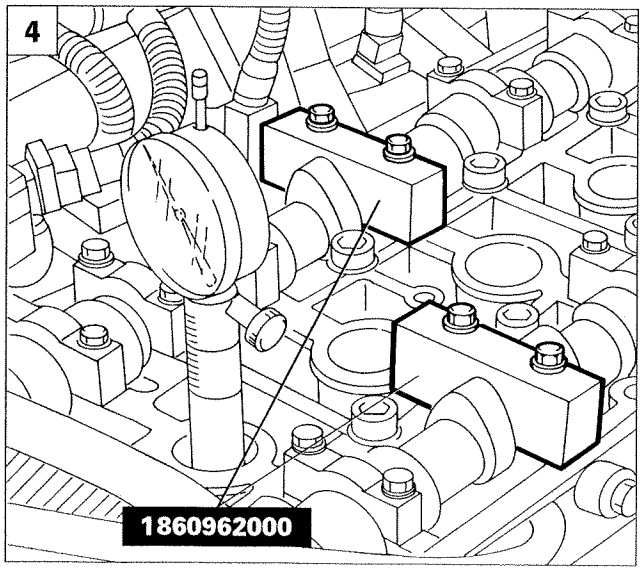

P3U15CJ09

1. Remove the spark plug of cylinder no. 1 using wrench 1850184000.
2. Replace the spark plug of cylinder no. 1 with the gauge using adaptor 1895879000 and check that cylinder no. 1 is at T.D.C.
3. Disconnect the intake end camshaft cap corresponding to cylinder 3 and exhaust end camshaft cap corresponding to cylinder 2.
4. Position and secure the pair of tools in place of the caps removed previously.

The letters "A" and "S" printed on each tool indicate Inlet and Exhaust respectively. Ensure that the tool profile fits the camshaft profiles perfectly

5. Loosen timing belt tension by unscrewing the tensioner nut, then prise off the belt.

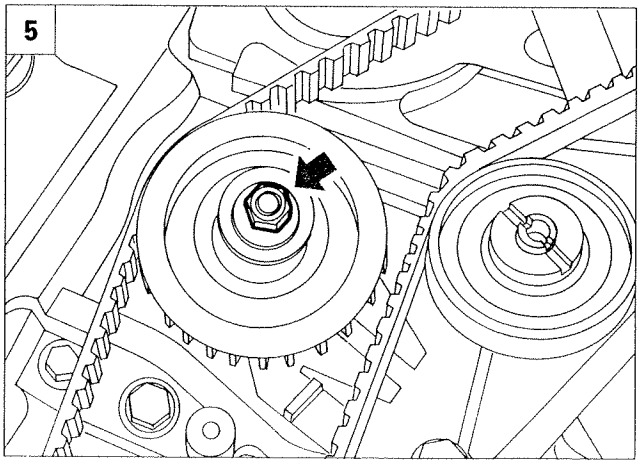

P3U15CJ10

Copyright Fiat Auto

1

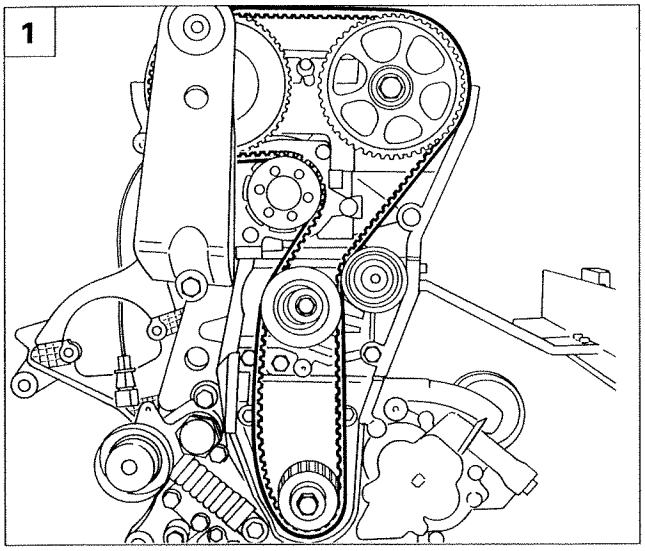

P3U06FJ01

2 4

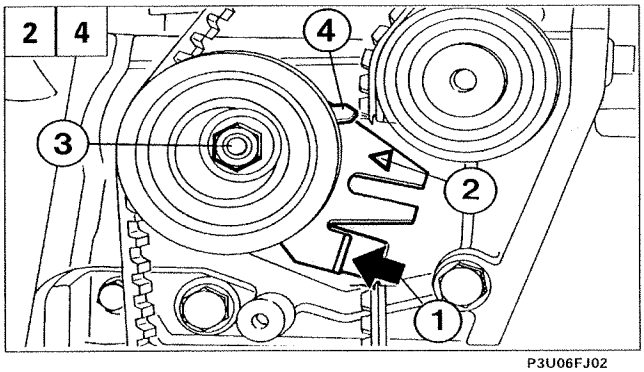

P3U06FJ02

3

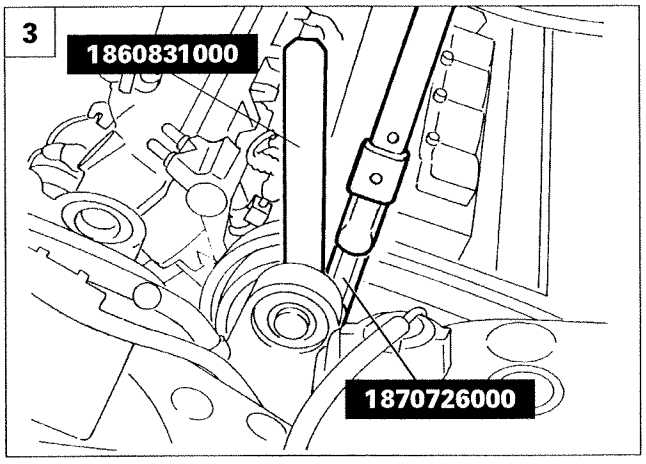

P3U06FJ03

5

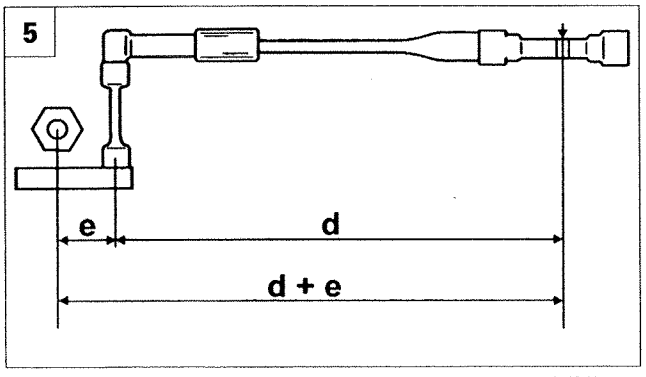

P3U06FJ04

itting and tensioning timing belt

1. Use tool 1860831000 to loosen the bolts retaining camshaft pulleys (use adaptor 1870726000 for the intake side) and remove toothed belt components in the following order:

   - crankshaft gear;
   - fixed guide pulley;
   - exhaust end camshaft pulley;
   - intake end camshaft pulley;

   - automatic tensioner;
   - coolant pump.

An arrow on the timing belt indicates engine direction of rotation.

2. Use a screwdriver to apply force to automatic tensioner (1) in order to move the tensioner to a position of maximum tension, then tighten the tensioner retaining bolt.

3. Use reaction wrench 1860831000 to tighten the bolt retaiing the exhaust end pulley retaining bolt to torque, then use tools 1860831000 and 1870726000 (illustrated) to tighten the intake end pulley retaining bolts.

NOTE *Tighten intake end pulley to torque C1 calculated using equation (see fig. 4):*

$$C1 = \frac{cxd}{d+e}$$

where: C: specified torque; and: extension; d: original lever arm.

Remove the tools on the engine, refit the camshaft caps, tighten the retaining bolts to a torque of 1.5 daNm and turn the crankshaft twice in its normal direction of rotation.

4. Loosen the nut retaining the tensioner and align tensioner mobile indicator (4) with fixed reference (2), then tighten the retaining nut of tensioner (3) to the specified torque.
   Then refit the parts removed previously by following removal instructions in reverse order.

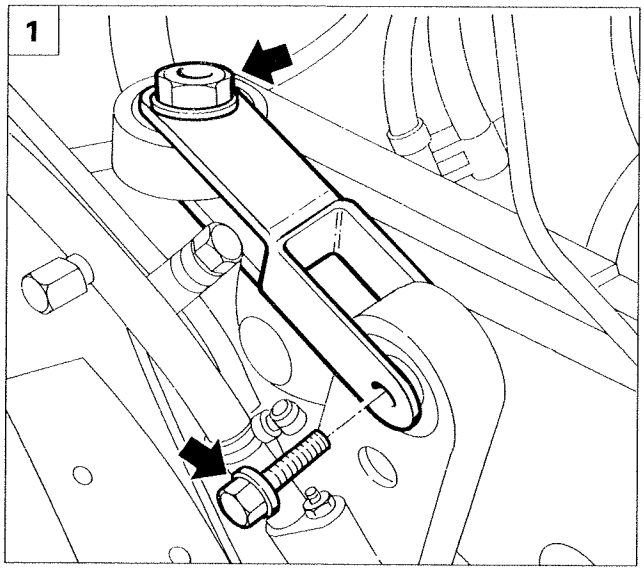

P3U12CJ01

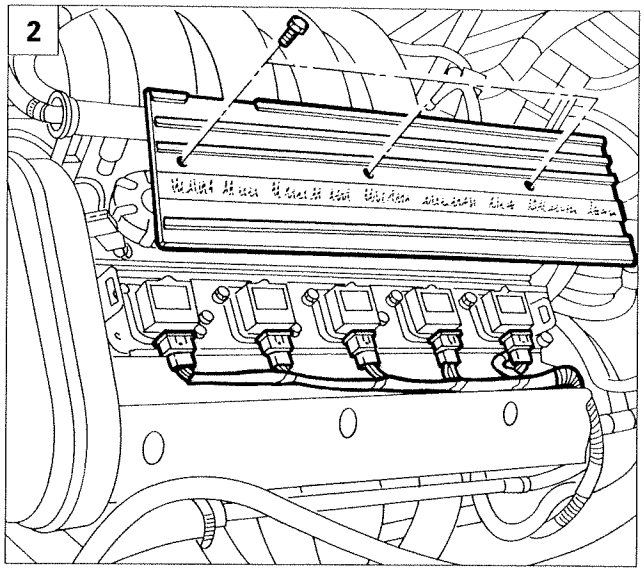

P3U04CJ05

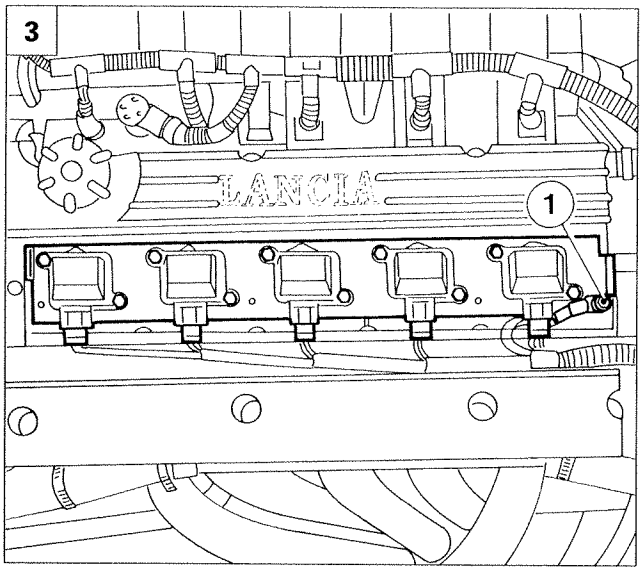

P3U12CJ04

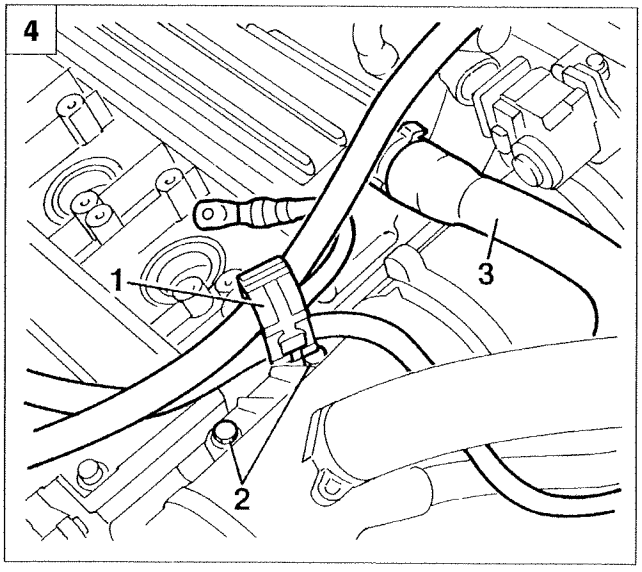

P3U03FJ01

REMOVING-REFITTING CYLINDER HEAD

Before removing the cylinder head, remove the auxiliary drivebelt as described previously.

1. Remove the reaction rod by undoing the bolts indicated. This operation is necessary to allow removal of the timing belt guard.

2. Remove the ignition coil protective covers.

3. Disconnect electrical connections from the ignition coils and earth lead (1), then prise up the wiring and remove the coils.

4. Open collar (1), then prise up the wiring and coolant lines; unscrew bolts (2) retaining the engine air delivery line, then disconnect the oil vapour recovery line (3) from the cylinder head cover.

Copyright Fiat Auto

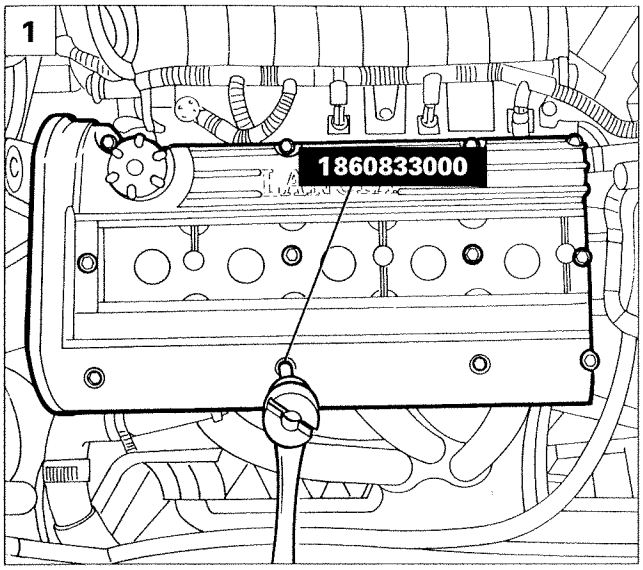

P3U15CJ04

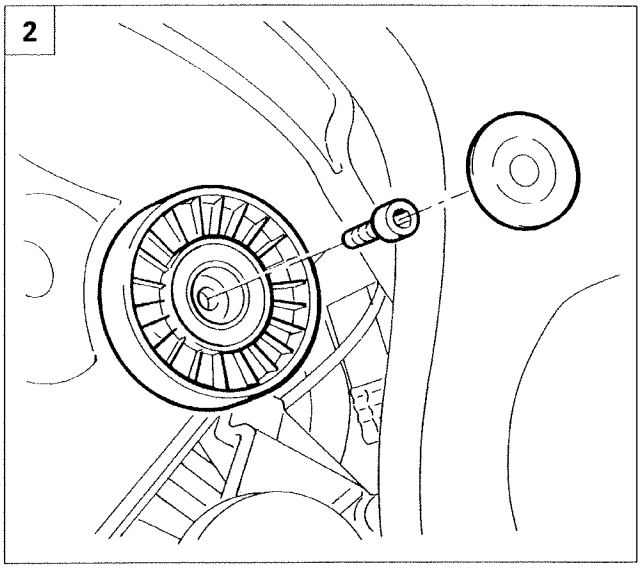

P3U04FJ01

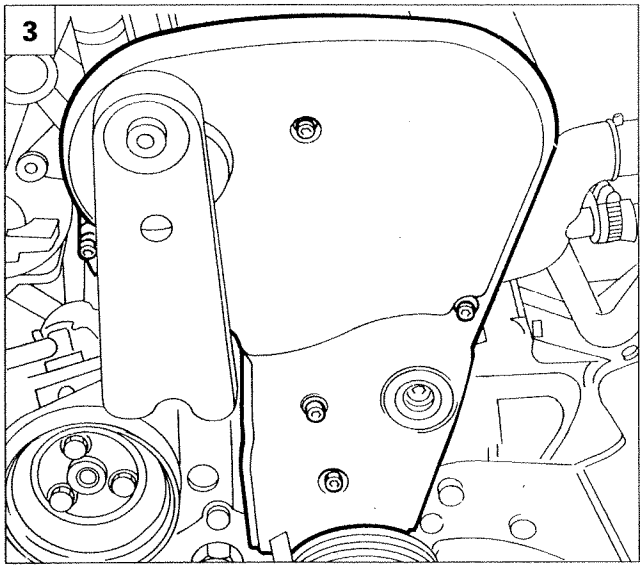

P3U12CJ02

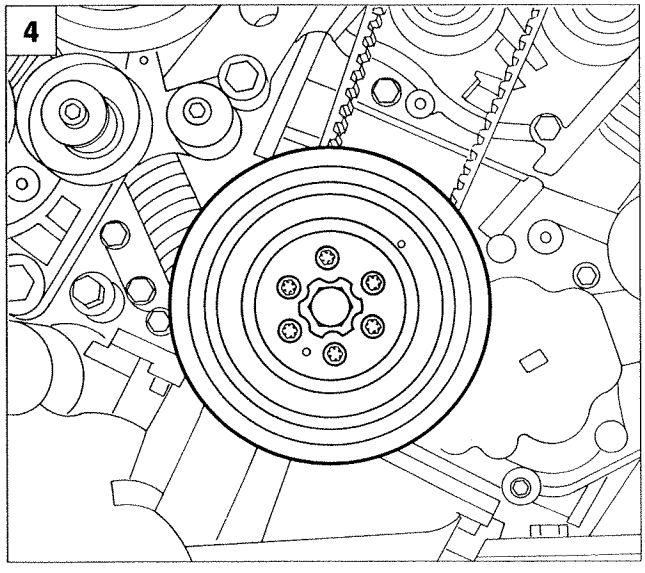

P3U12CJ03

1. Remove the cylinder head cover, use tool 1860833000 to unscrew the retaining bolts.
2. Remove the auxiliary drivebelt idler pulley.
3. Remove the timing belt guard.
4. Remove the auxiliary drive pulley.

If no work is to be carried out on the cylinder head, at this stage position tools 1860962000 (templates) to adjust camshaft timing as described in the previous paragraph.

5. Loosen timing belt tension by adjusting the tensioner retaining nut, then prise off the belt.

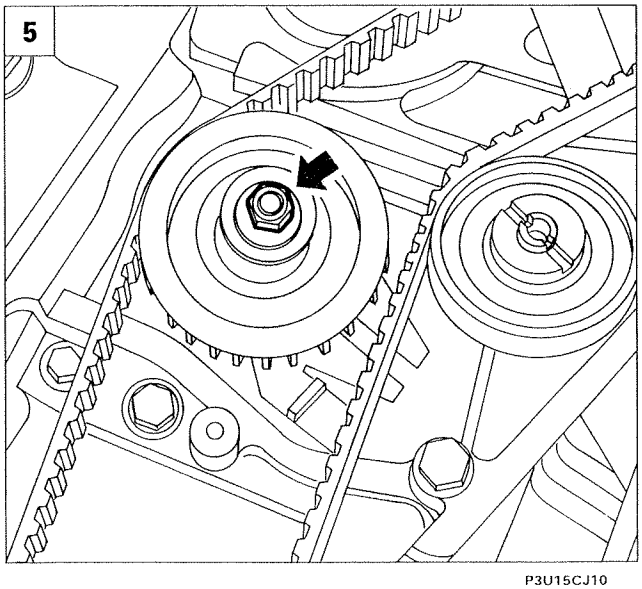

P3U15CJ10

1

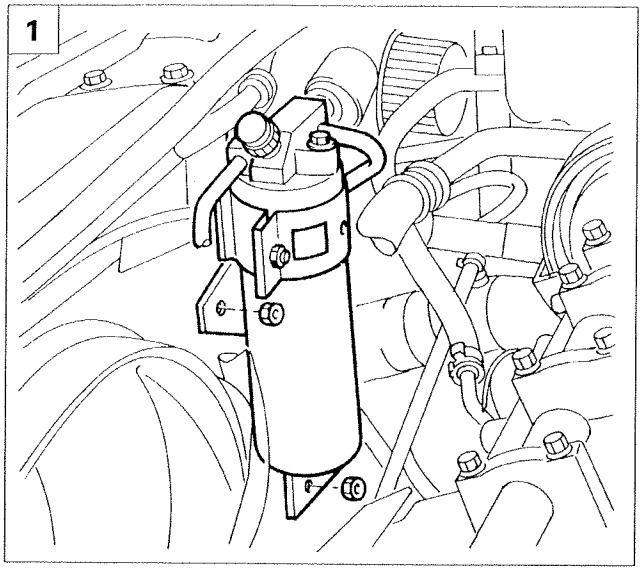

P3U09FJ01

2

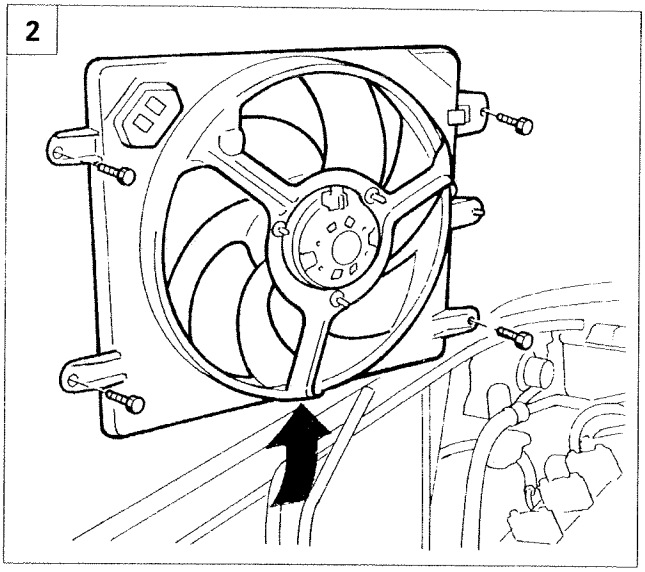

P3U09FJ02

3

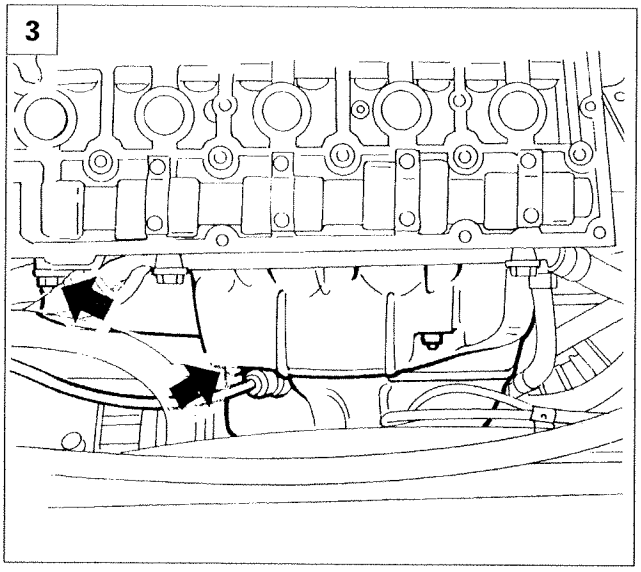

P3U09FJ03





1. Release the dehydrating filter together with mounting bracket and remove the assembly from the radiator without disconnecting the piping.
2. Disconnect electrical connections, unscrew the retaining bolts and remove the radiator fan including shroud.
3. Disconnect electrical connection from the lambda probe and remove the exhaust manifold heat shield (in 2 parts).
4. Unscrew the retaining bolts and remove the underbody protection.
5. Remove the turbocharger oil return pipe protection and disconnect the pipe at the point indicated, after loosening the pipe collar.

4

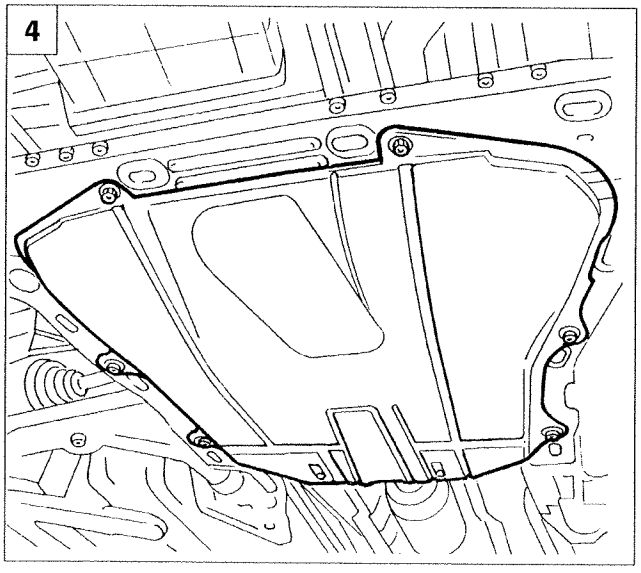

P3U09FJ04

5

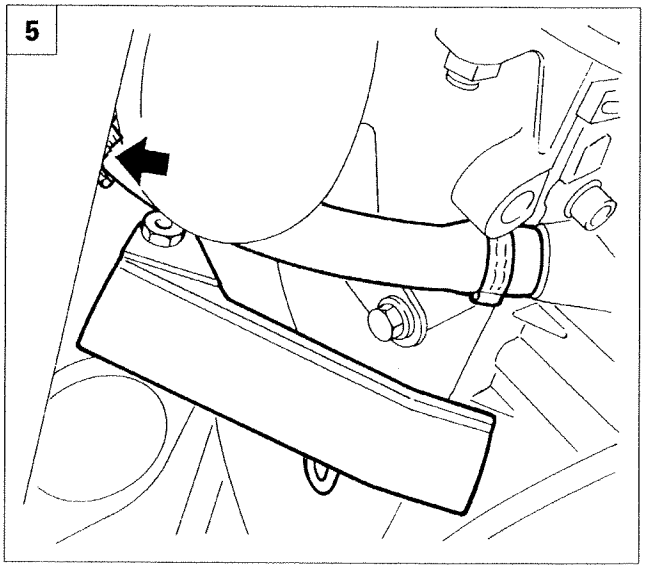

P3U09FJ05

Copyright Fiat Auto

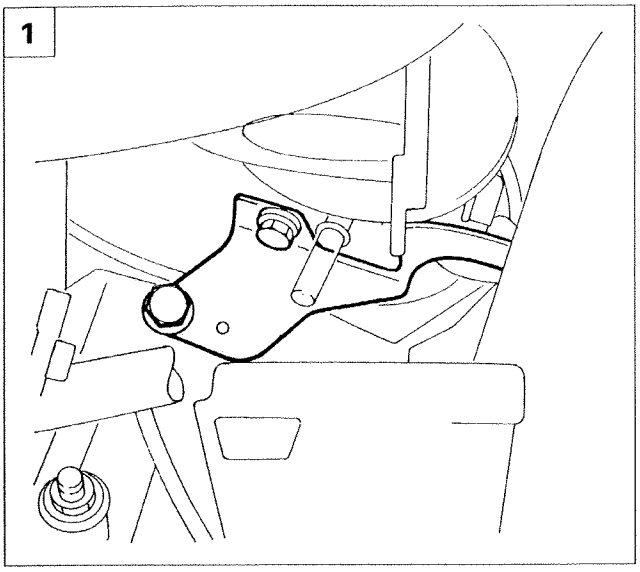

P3U10FJ01

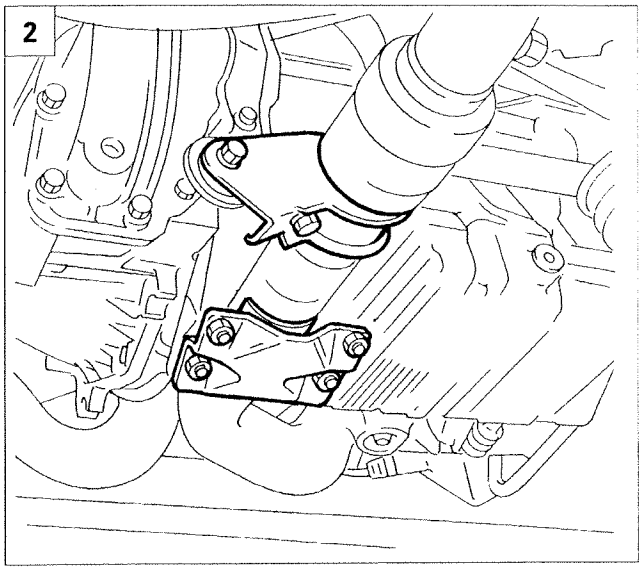

P3U10FJ02

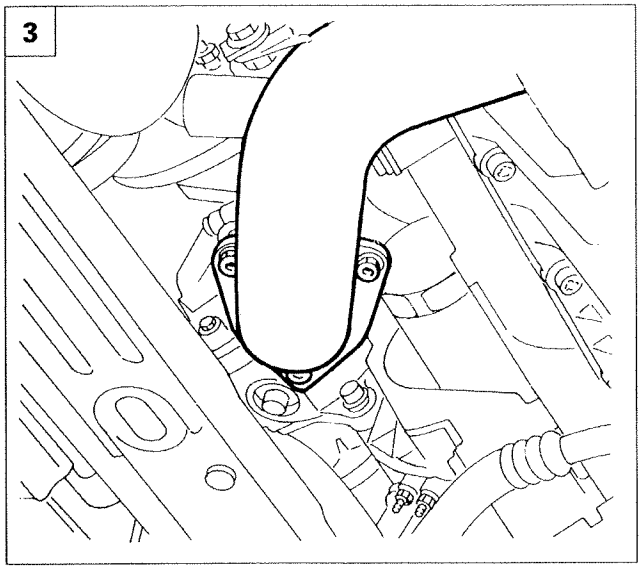

P3U10FJ03

1. Remove the turbocharger bracket.
2. Loosen the front exhaust pipe brackets and remove the retaining bolts/nuts.
3. Disconnect the front exhaust pipe flange from the turbocharger.

5. Unscrew the bolts fastening and move the rigid coolant pipes forward.

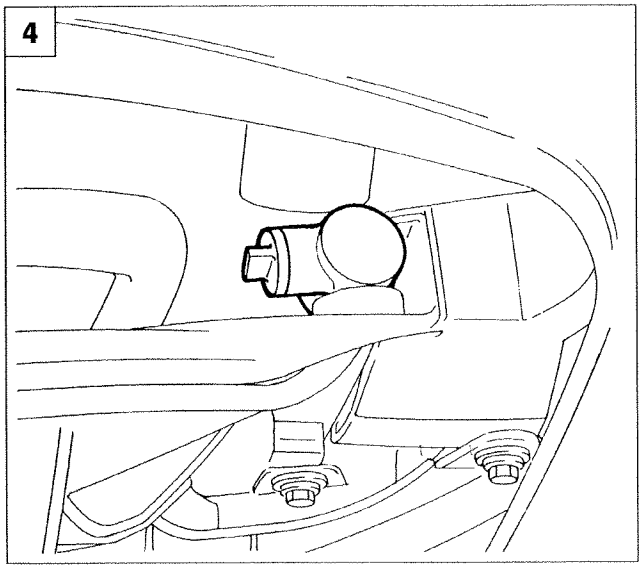

P3U10FJ04

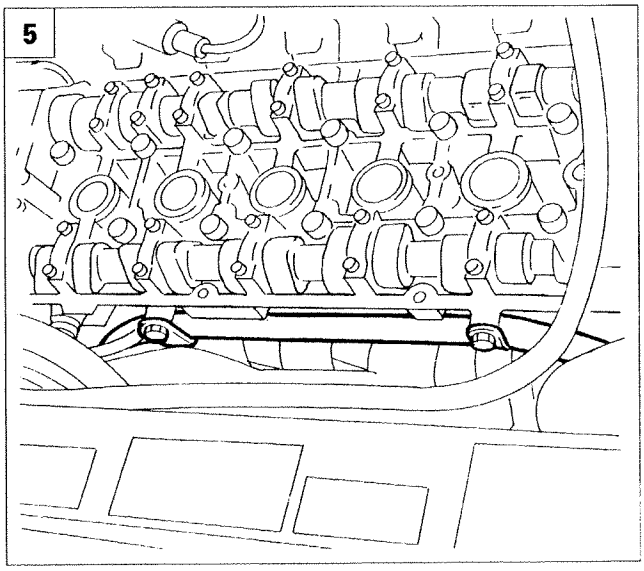

P3U10FJ05

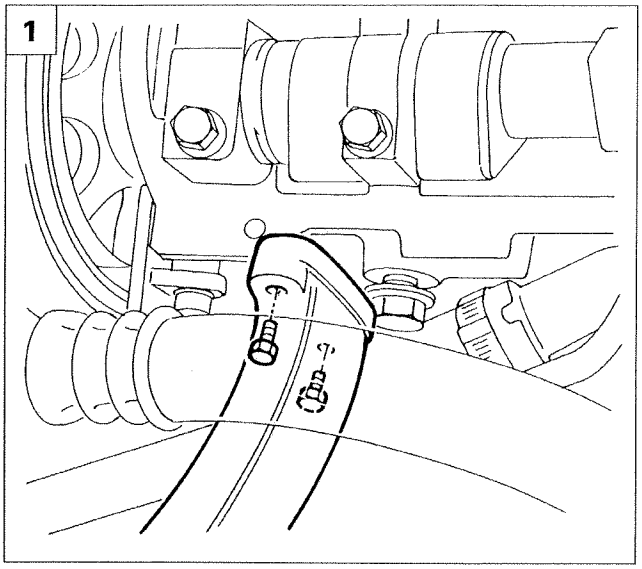

P3U11FJ01

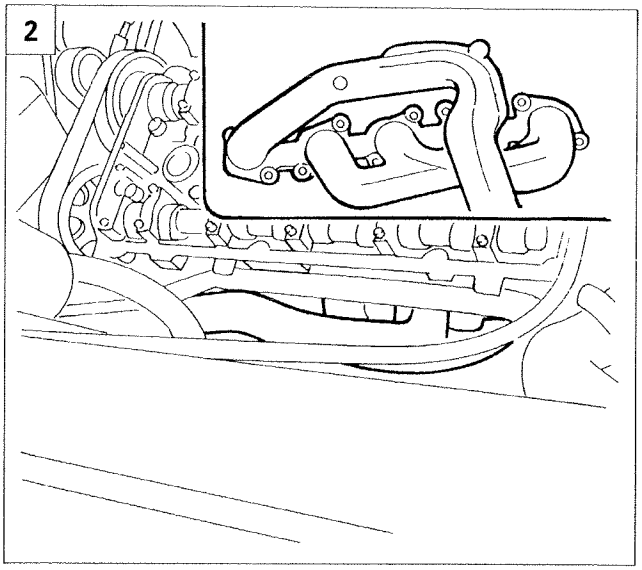

P3U11FJ02

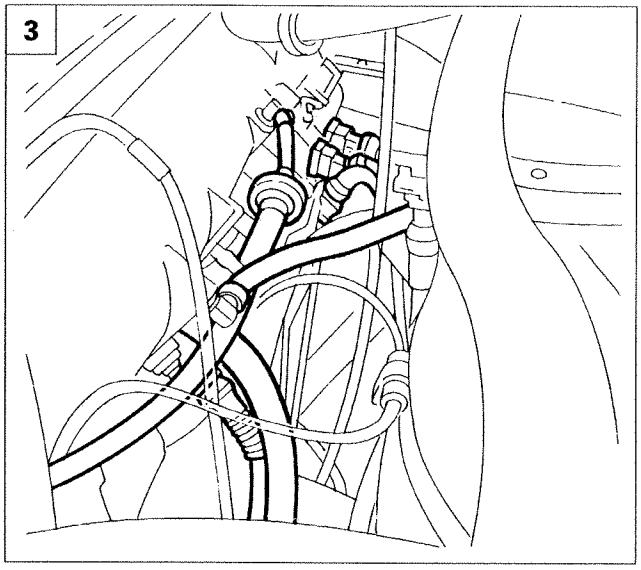

P3U11FJ03

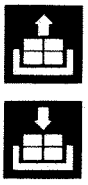

1. Disconnect the rigid coolant pipe from the cylinder head.
2. Unscrew the bolts fastening the exhaust manifold to the cylinder head.
3. Remove right side knock sensor from the crankcase and disconnect the piping and the electrical connections from the intake manifold.
4. Disconnect the upper dipstick bracket
5. Disconnect electrical connections from the variable valve timing system and from the injectors, then move the wiring aside.

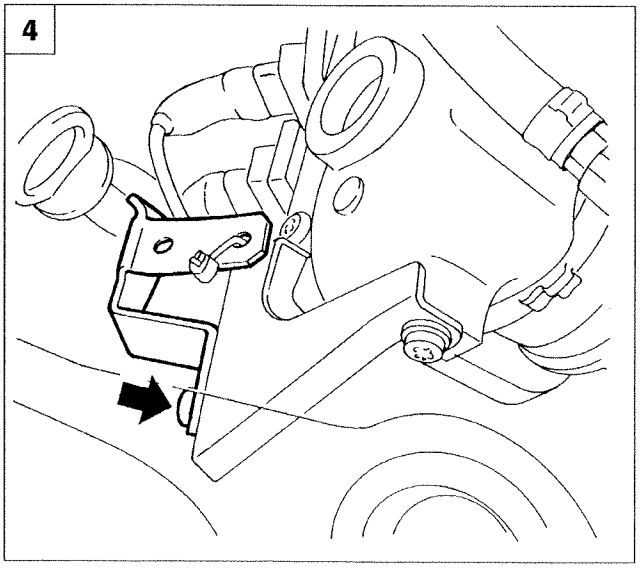

P3U11FJ04

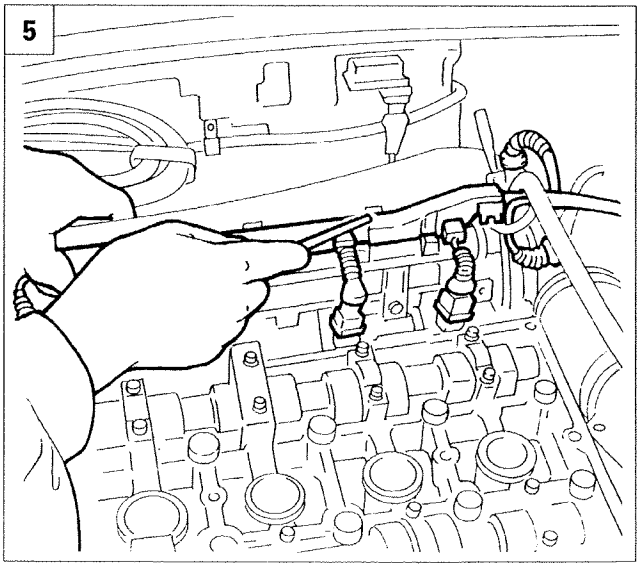

P3U11FJ05

Copyright Fiat Auto

10.

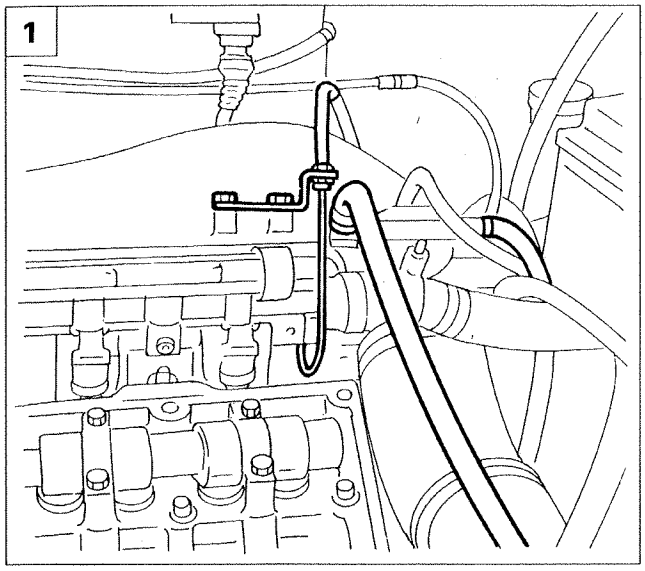

P3U12FJ01

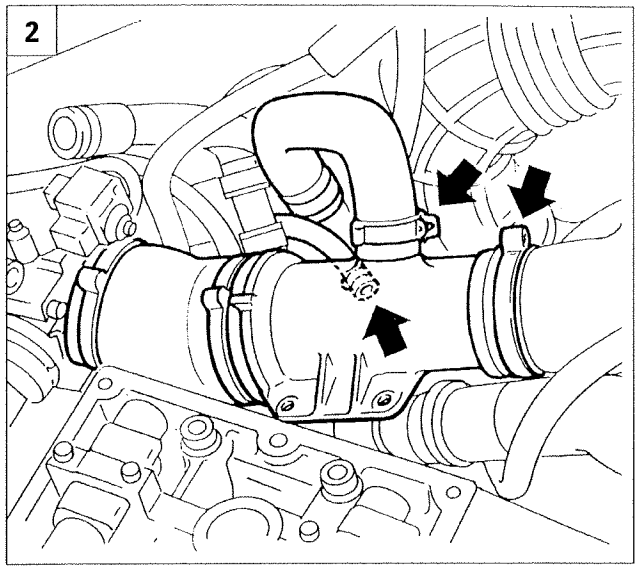

P3U12FJ02

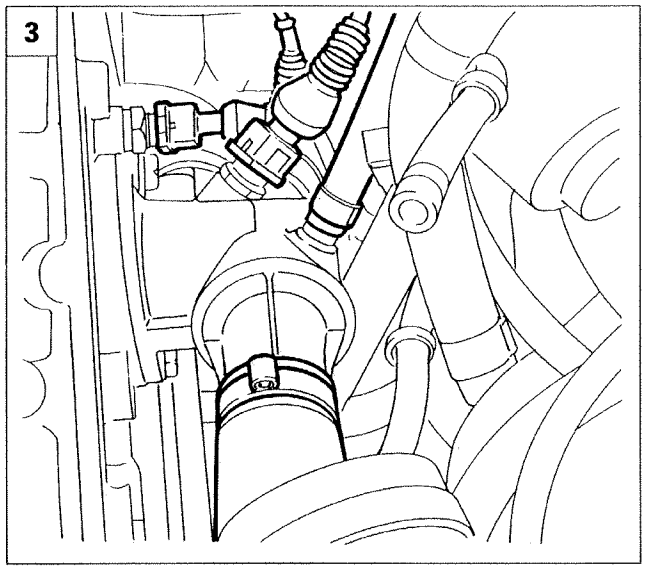

P3U12FJ03

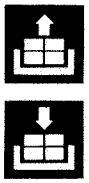

1. Disconnect the throttle valve control lead and remove the bracket, then disconnect the coolant delivery and return lines to the throttle body.
2. Remove the air intake line to the throttle body after loosening the collars indicated.
3. Disconnect electrical connections and sleeves indicated from the thermostat.
4. Remove both upper nuts securingthe inlet manifold to the support bracket and loosen both lower nuts of the bracket, then move the bracket back.
5. Loosen the support collar and disconnect the fuel lines from the manifold.

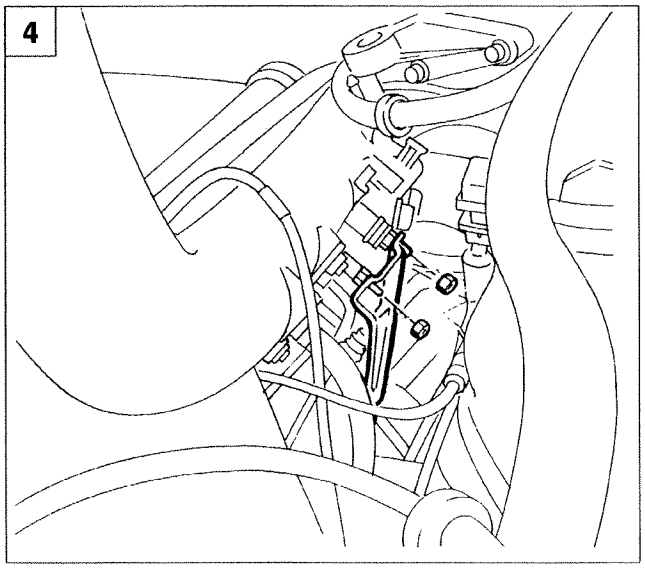

P3U12FJ04

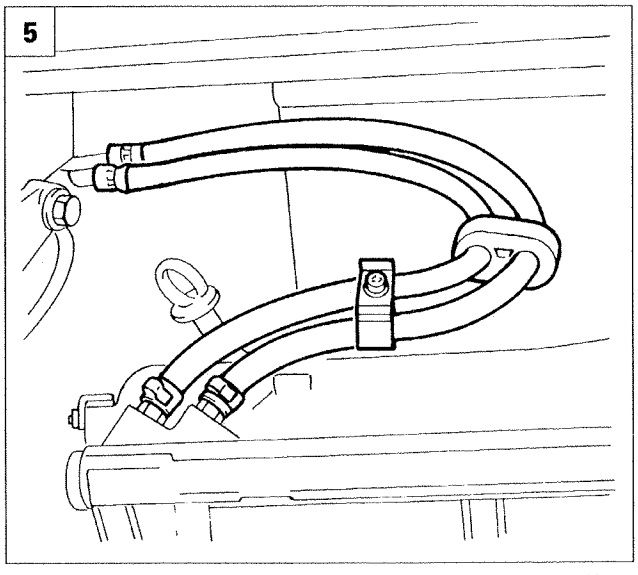

P3U12FJ05

1

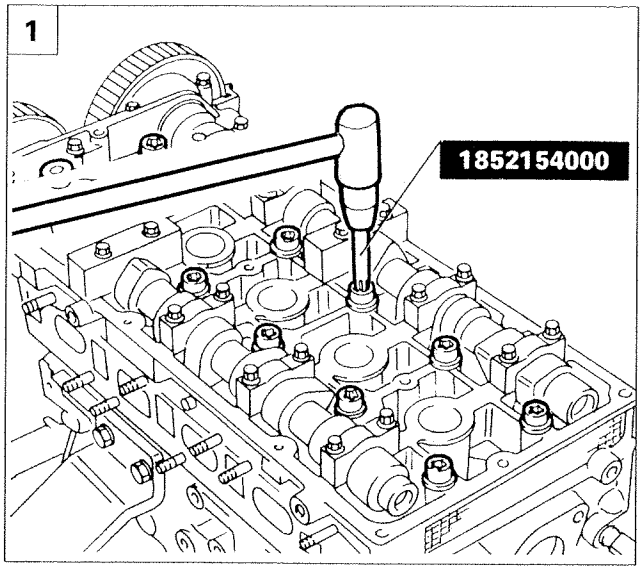

P3U13FJ01

1. Unscrew the bolts fastening and remove the cylinder head together with inlet manifold.

2

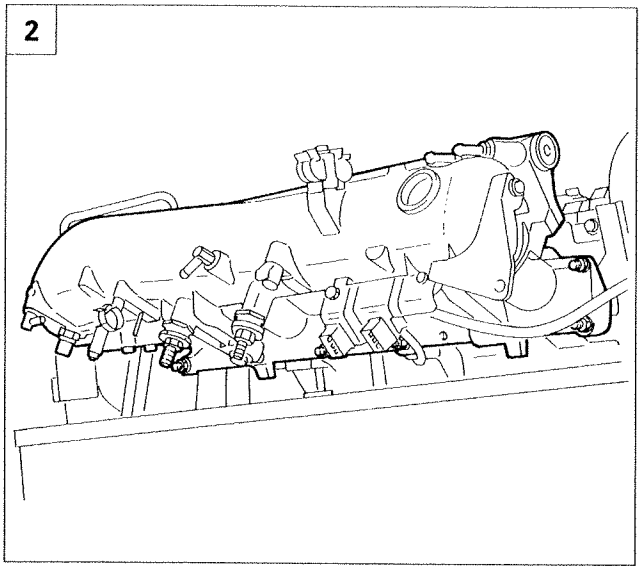

P3U13FJ02

2. Working at the bench separate the inlet manifold from the cylinder head by unscrewing the retaining screws.

Refitting

3. Position the cylinder head gasket with the wording "ALTO" facing the operator.

The cylinder head gasket is ASTADUR type. Because it is made out of special material, this gasket undergoes polymerisation during engine operation, and therefore hardens considerably during service.
Proceed as follows to ensure gasket polymerisation takes place:

- *keep the gasket sealed in its plastic bag;*
- *do not take out of its bag until ready to use;*
- *do not lubricate the gasket or contaminate with oil, ensure the cylinder head and gasket surfaces are thoroughly cleaned.*

3

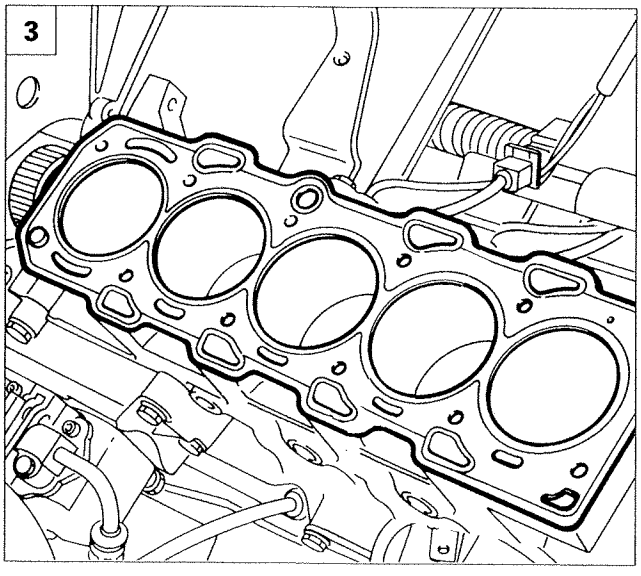

P3U13FJ03

Copyright Fiat Auto

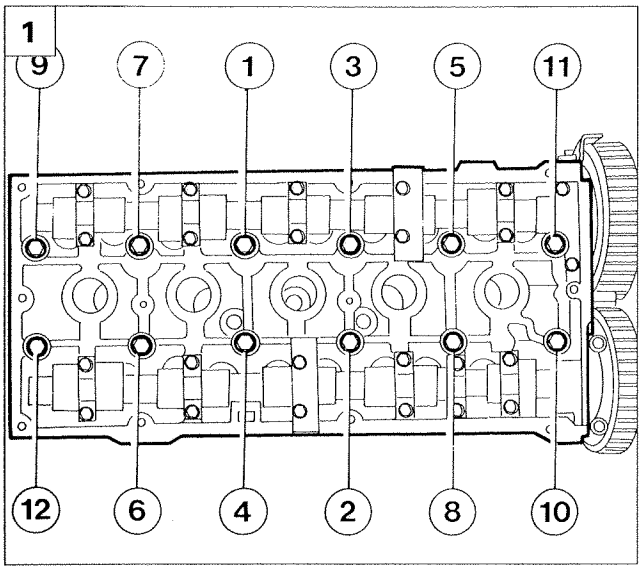

P3U14FJ01

If not present on the cylinder head, fit camshaft timing tools 1860962000 as described in the paragraph on timing belt replacement, before fitting the cylinder head to the engine block.

1. Position the cylinder head together with inlet manifold and tighten the retaining screws to a torque of 2 daNm, following the tightening order shown in the figure.

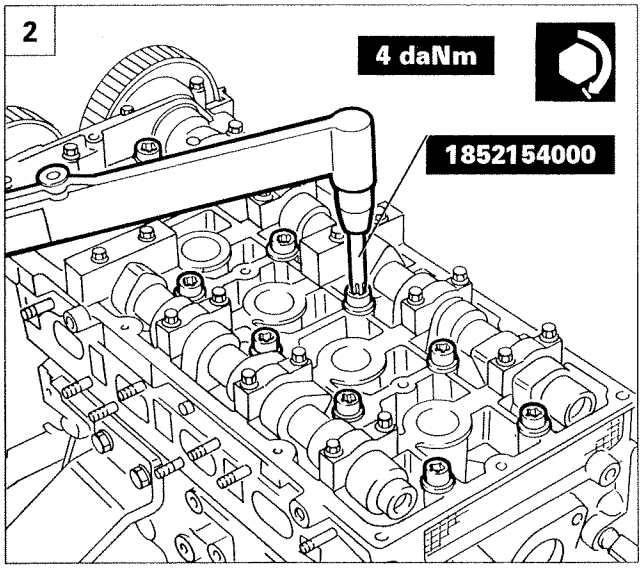

P3U14FJ02

2. stage 1: Following the tightening order indicated previously, tighten the bolts to a torque of 4 daNm.

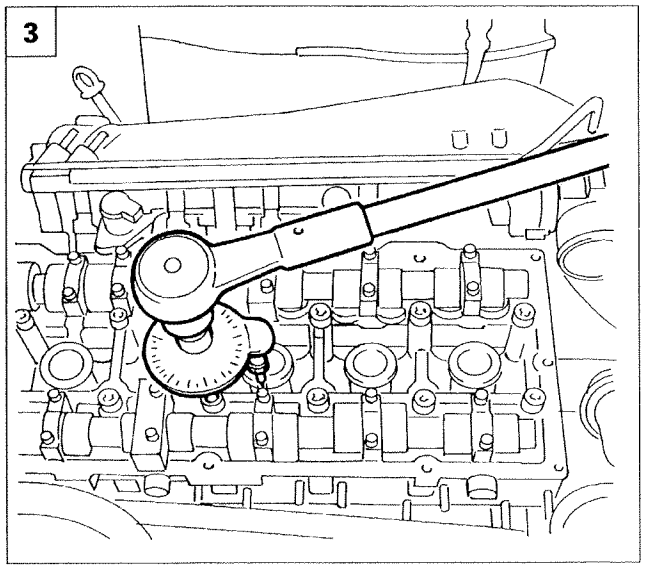

P3U14FJ03

3. stage 2: following the tightening order indicated previously, further tighten all bolts through 90°.

   stage 3: Further tighten all bolts through 90°.

   stage 4: Further tighten all bolts through a further 90°.

Finish refitting by carrying out removal instructions in reverse order.

1

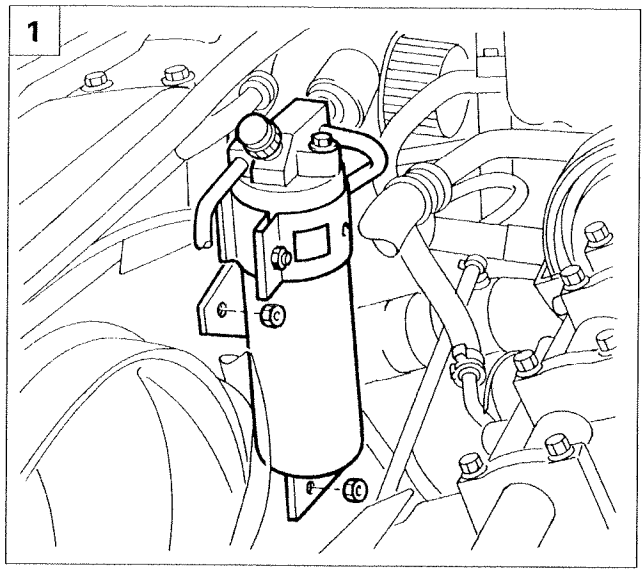

P3U09FJ01

2

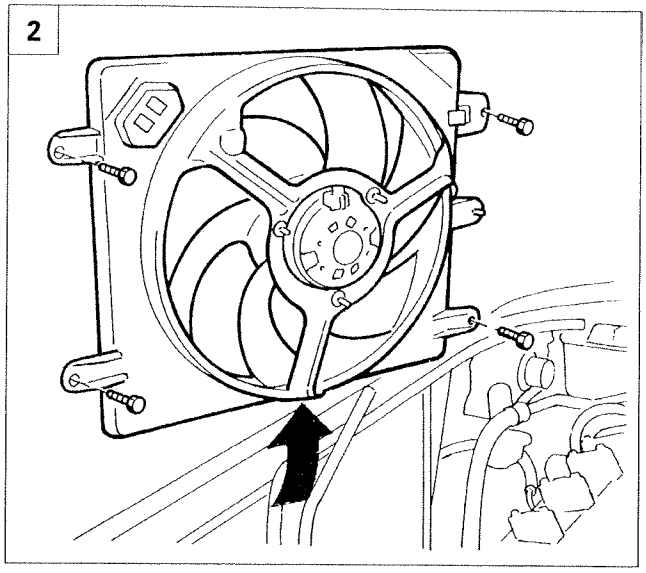

P3U09FJ02

3

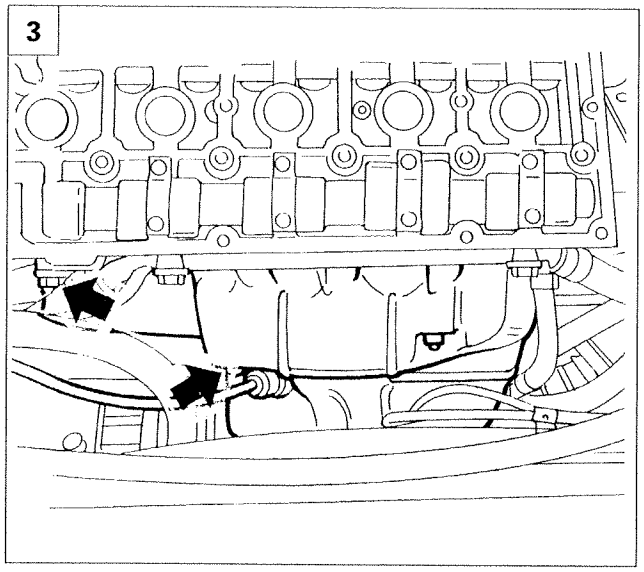

P3U09FJ03

REMOVING-REFITTING TURBOCHARGER

1. Release the dehydrating filter together with mounting bracket and remove the assembly from the radiator without disconnecting the piping.
2. Disconnect electrical connections, unscrew the bolts fastening and remove the radiator fan together with shroud.
3. Disconnect electrical connection of the lambda probe and remove the exhaust manifold heat shield (in 2 parts).
4. Unscrew the retaining bolts and remove the underbody protection.
5. Remove the turbocharger oil return pipe protection and disconnect the pipe at the point indicated, after loosening the pipe collar.

4

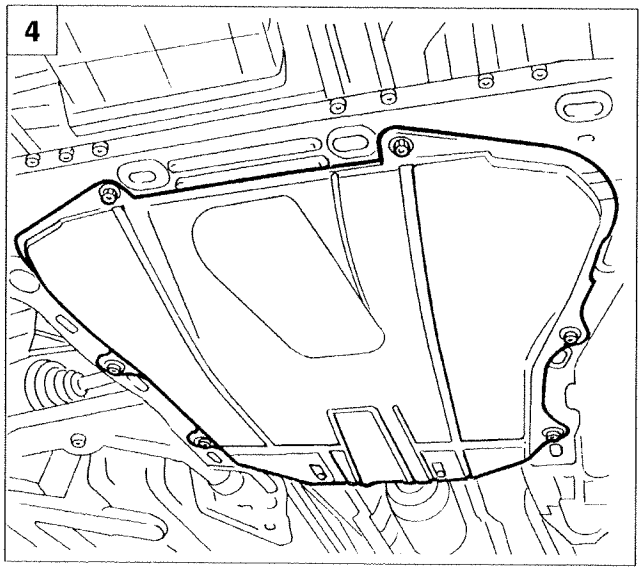

P3U09FJ04

5

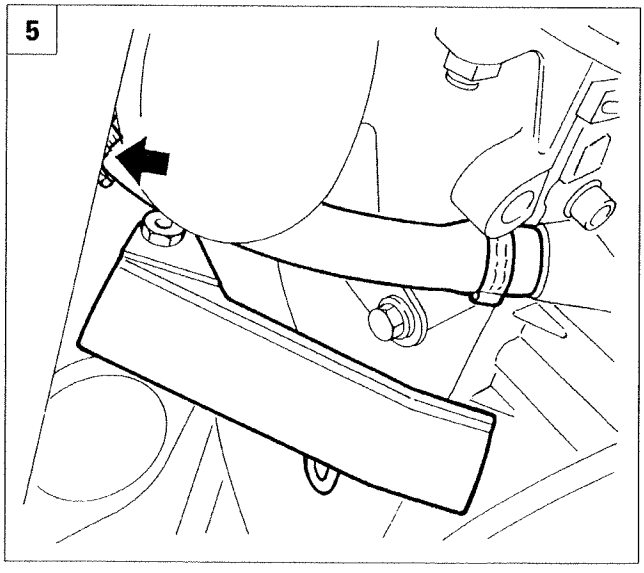

P3U09FJ05

Copyright Fiat Auto

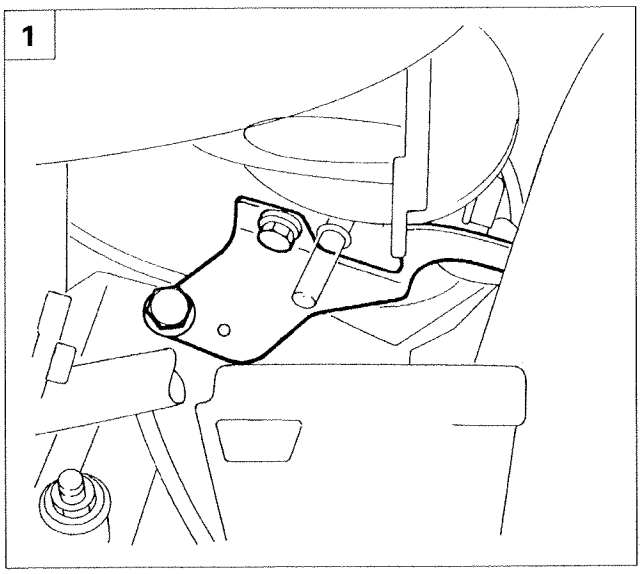

P3U10FJ01

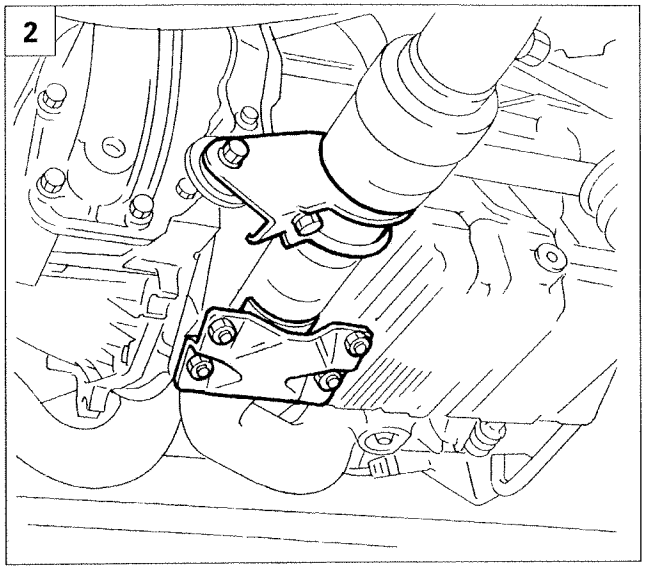

P3U10FJ02

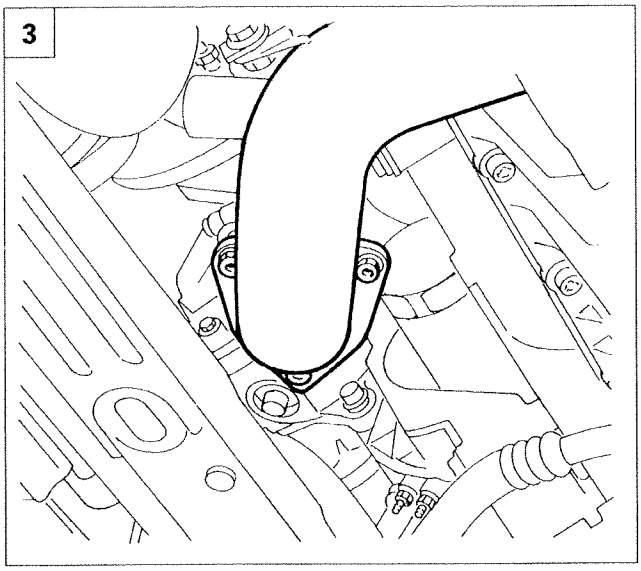

P3U10FJ03

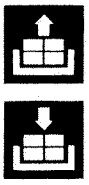

1. Remove the turbocharger bracket.
2. Loosen the front exhaust pipe brackets and remove the retaining bolts/nuts.
3. Disconnect the front exhaust pipe flange from the turbocharger.
4. Disconnect air line from compressor to intercooler and the pipe from the wastegate actuator.
5. Disconnect the air lines from the turbocharger after loosening the pipe collars.

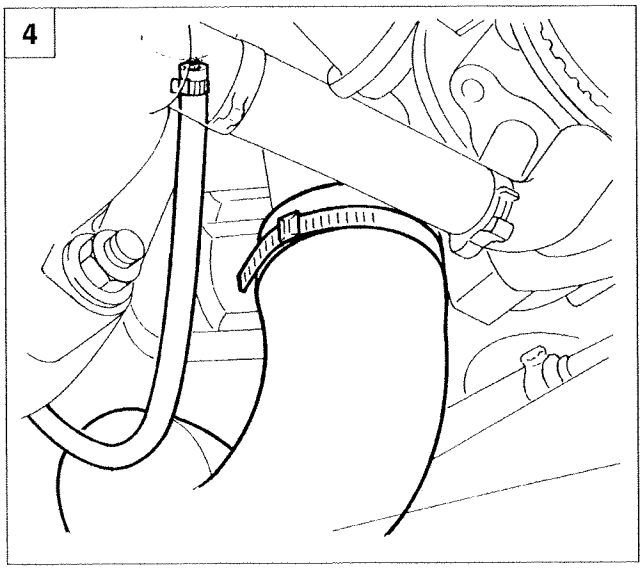

P3U16FJ01

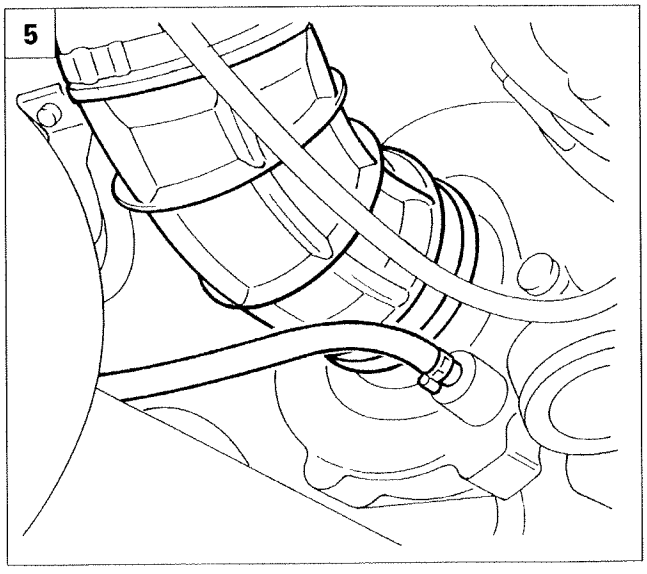

P3U16FJ02

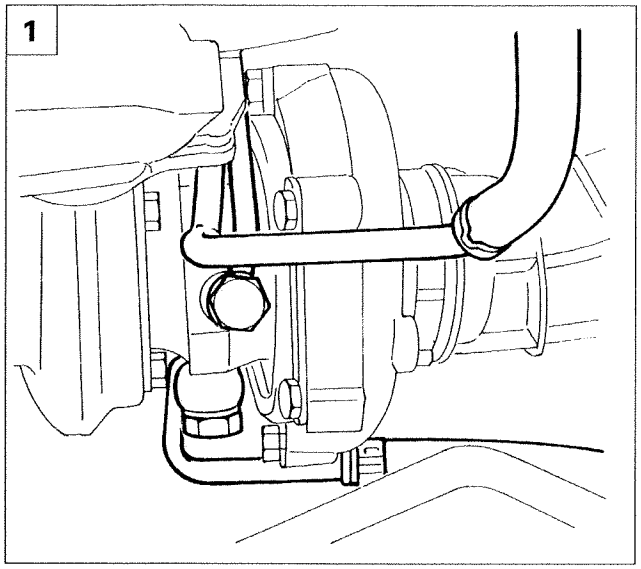

P3U17FJ01

1. Disconnect the coolant lines from the turbocharger and fit plugs to prevent fluid emerging, then disconnect the oil delivery line (not shown).

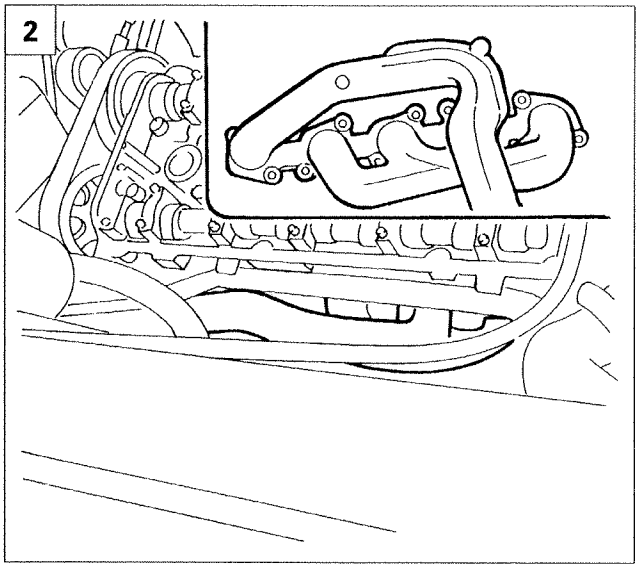

P3U11FJ02

2. Unscrew the bolts fastening the exhaust manifold to the cylinder head.

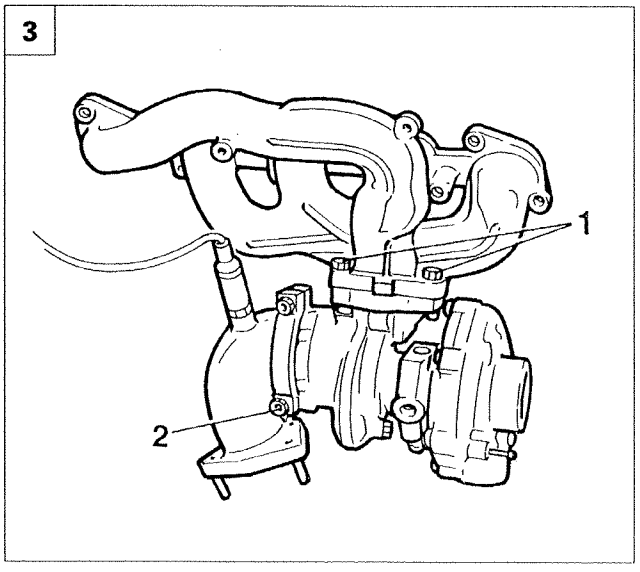

P3U17FJ02

3. Working at the bench, separate the turbocharger from the exhaust manifold by removing nuts (1) retaining the unit to the exhaust manifold and collar (2) retaining the unit to the exhaust pipe.

everse removal instructions to refit.

Copyright Fiat Auto

Automatic transmission and differential

Index

21-27

page

COMPOSITION AND OPERATION

- Description 1
- Section of ZF 4HP20 automatic transmission 2
- Diagram showing ZF 4HP20 automatic transmission and differential 3
- Basic components 4
- Transmission of power 11
- Control system 17
- Gearbox control unit 18
- ZF 4HP20 gearbox control unit pin-out 19
- Diagram showing information entering/leaving TCM gearbox control unit to sensors/actuators 20
- Operating strategies 21
- ZF 4HP20 gearbox control system wiring diagram 26
- Solenoid valves (EV) and pressure relief valves (REG) 28

OPERATIONS AT THE BENCH

- Torque converter – Oil seal for gearbox input shaft 30
- Left differential oil seal 32
- Right differential oil seal 33
- Gear selector 34
- Oil recirculation pipe 34
- Gear selector solenoid valves 35

OPERATIONS ON VEHICLE

- Draining oil 38
- Gear selector solenoid valves cover 39
- Gear selector solenoid valves 39
- Gear selector 40
- Automatic transmission fluid radiator 41
- Fluid pipes from automatic transmission to radiator 45
- Oil recirculation pipe 45
- Drive shafts 46
- Right differential oil seal 48
- Left differential oil seal 49
- Gear engagment cable 50
- Gearbox control lever 56
- Electronic control unit 57
- Bolts fixing torque converter to flywheel 58

CHECKS AND TESTS

- Oil level check 59
- Hydraulic test 60

Copyright Fiat Auto

COPYRIGHT by Fiat Auto S.p.A.

Any reproduction of the text or illustrations is prohibited.

The information contained in this publication is supplied as a guide and may no longer be up to date as a result of modifications made by the Manufacturer, at any time, for reasons of a technical or commercial nature in addition to meet legal requirements in different countries.

Fiat Auto S.p.A.
Direzione Qualità
Assistenza Tecnica
Largo Senatore G. Agnelli, 5 – 10040 Volvera – To – (Italia)
Print n° 506.475/30 – V 2000 – 400
Printed by Satiz S.p.A. – Turin (Italy)
order n° *604.47.413*

DESCRIPTION

Introduction

The LANCIA k 3.0 V6 24v uses a 4-speed AF 4HP20 automatic transmission and differential unit, specially designed for cars with front-wheel drive and transverse-mounted engine, fitted with a highly sophisticated electronic control system.
The TCM gearbox control unit is located under the dashboard, on the passenger side.
The mechanical unit of the automatic transmission consists of:
- a hydraulic fluid torque converter fitted with dynamically-controlled lock-up clutch;
- two epicyclic gears connected to each other in cascade, which obtain different transmission ratios;
- two brakes and three clutches driven by appropriate electrical valves, which interlock the various components as necessary to obtain the four forward gears and reverse gear;
- a parking lock, consisting of a ratchet gear, which locks the gearbox when the selector lever is in the P position;
- an oil pump which supplies the hydraulic pressure.

Selector lever and manual selector

There are two types of gearchage control:
- fully automatic operation;
- manual operation with selection of the gear to be engaged by the manual selector, with supervision by the system to prevent errors.

Fully automatic operation (part A)

The selector lever offers four positions:

P park:	vehicle blocked, the engine can be started
R reverse:	reverse ratio
N neutral:	neutral position, the engine can be started
D drive:	automatic engagement of the various ratios

Manual operation (part B)

The gear changes can be effected manually by means of a two-position manual selector:

- an upward gear change corresponds to every move towards the + sign;
- a downward gear change corresponds to every move towards the - sign.

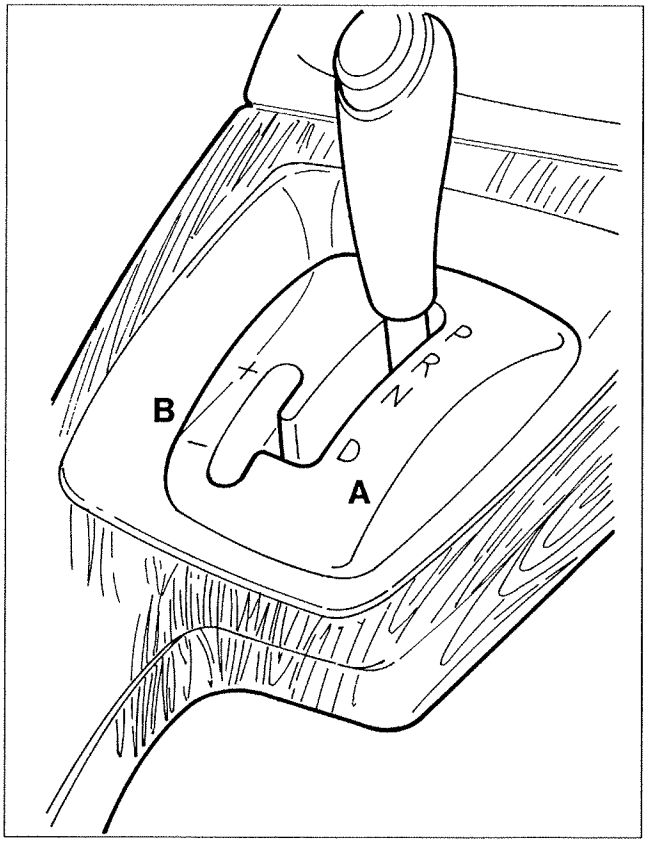

P3U01GB01

Copyright Fiat Auto

CROSS-SECTION OF ZF 20HP4 AUTOMATIC TRANSMISSION AND DIFFERENTIAL

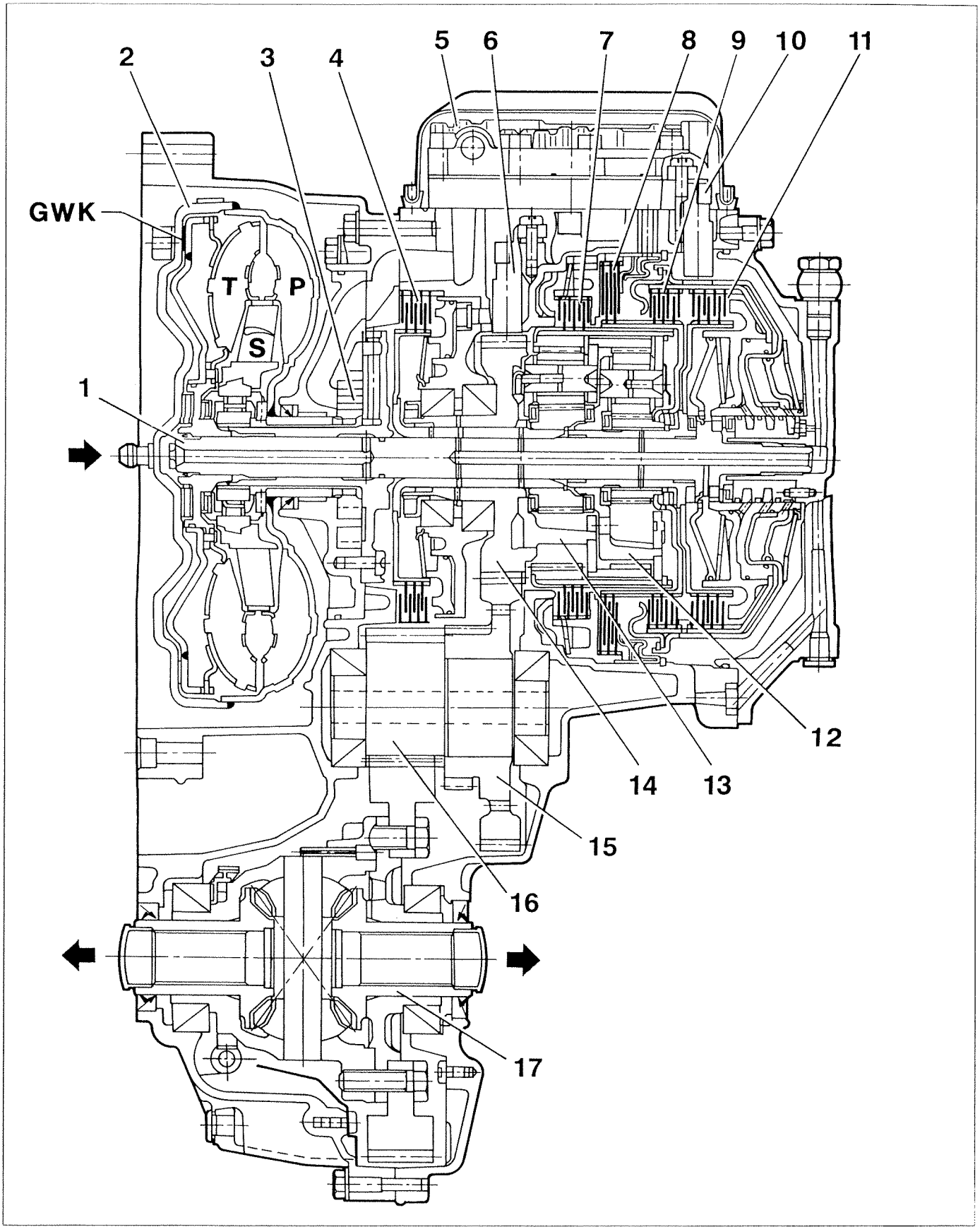

P3U02GB01

DIAGRAM OF ZF 20HP4 AUTOMATIC TRANSMISSION AND DIFFERENTIAL

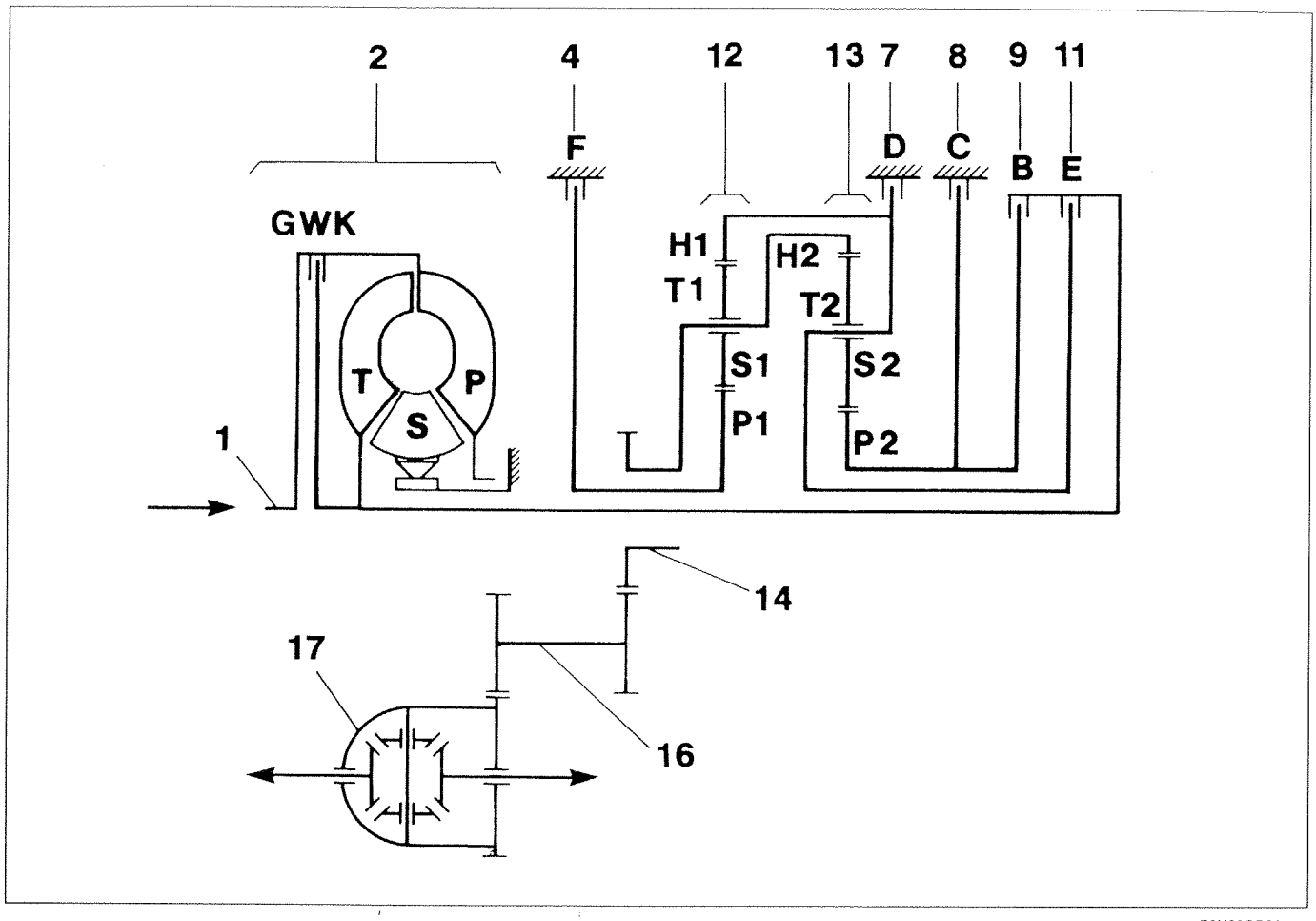

P3U03GB01

1. Input shaft
2. Torque converter
   T = turbine
   P = pump
   S = stator
   GWK = lock-up clutch
3. Oil pump
4. Brake F
5. Hydraulic valves assembly
6. Output shaft speed sensor
7. Brake D
8. Brake C
9. Clutch B
10. Input shaft speed sensor
11. Clutch E
12. Gear set 1
    Crownwheel 1 - H1
    Planet gear 1 - S1
    Gear train carrier 1 - T1
    Sun wheel 1 - P1
13. Gear set 2
    Crownwheel 2 - H2
    Planet gear 2 - S2
    Gear train carrier 2 - T2
    Sun wheel 2 - P2
14. Output pinion
15. Park brake pinion
16. Intermediate shaft
17. Differential

Copyright Fiat Auto

BASIC COMPONENTS

Torque converter

The purpose of the torque converter is to transmit the engine power hydraulically and to increase the torque when the vehicle is accelerating. The rotary motion is transmitted to the epicyclic gears via two transmission shafts:
- the crankshaft connected to the converter pump via the flywheel;
- the gearbox main shaft which engages in the hub of the converter turbine.

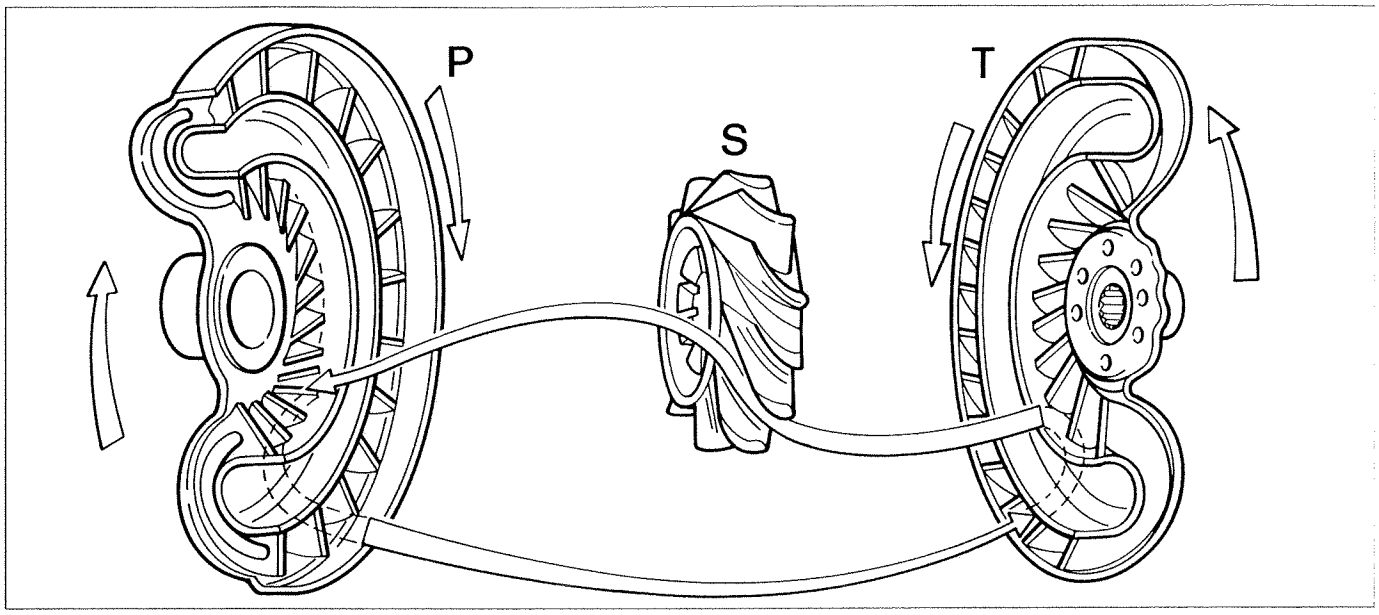

P3U04GB01

P. Pump S. Stator T. Turbine

The converter consists of a pump P joined to the crankshaft, a turbine T joined to the gearbox main shaft, and a stator S joined to the gearbox outer casing. The converter is totally filled with oil which, thanks to the kinetic energy delivered by the pump, transmits the driving torque.

NOTE *The torque converter is not subject to any wear as there is no mechanical connection between the driven part and the driving part.*

The impeller P is connected to the crankshaft and, rotating clockwise, acts as a pump, transmitting its energy to the oil.
Centrifugal force pushes the oil towards the outside of the impeller, where it flows at high speed towards the turbine T. Here the kinetic energy of the oil gives a clockwise rotary movement to the turbine. The oil then passes through the stator S where it is diverted in accordance with an angle which allows it to return to the pump with a high output. The stator is connected to the gearbox casing by means of a roller clutch which prevents anti-clockwise rotation and supplies a reaction torque, proportional to the diverted oil flow, which is added to that of the turbine.
The ratio between the torque acting on the turbine and the torque supplied by the pump is known as the torque multiplication ratio, and is proportional to the difference in speeds of rotation of pump and turbine. When the wheels are stopped, the torque is about double that delivered by the engine.
When the turbine speed is increased, the torque multiplication decreases constantly and tends to reach the ratio 1:1, corresponding to a turbine speed which is 85-90% of that of the pump. When the turbine and pump speeds are virtually the same, the stator is enveloped by a flow of oil inclined at an angle which makes it reverse its direction of rotation and, not being locked by the roller clutch, it rotates in a clockwise direction without impediment and the torque converter simply acts as a hydraulic coupling.

Lock-up clutch

The lock-up clutch is a device which, when activated, provides a mechanical coupling between the input and output of the converter.
When the lock-up clutch is activated, the relative slip between pump (P) and turbine (T) is eliminated, thus transforming the gearbox into a mechanical transmission, with a relative reduction in loss of friction in the converter resulting in lower fuel consumption.

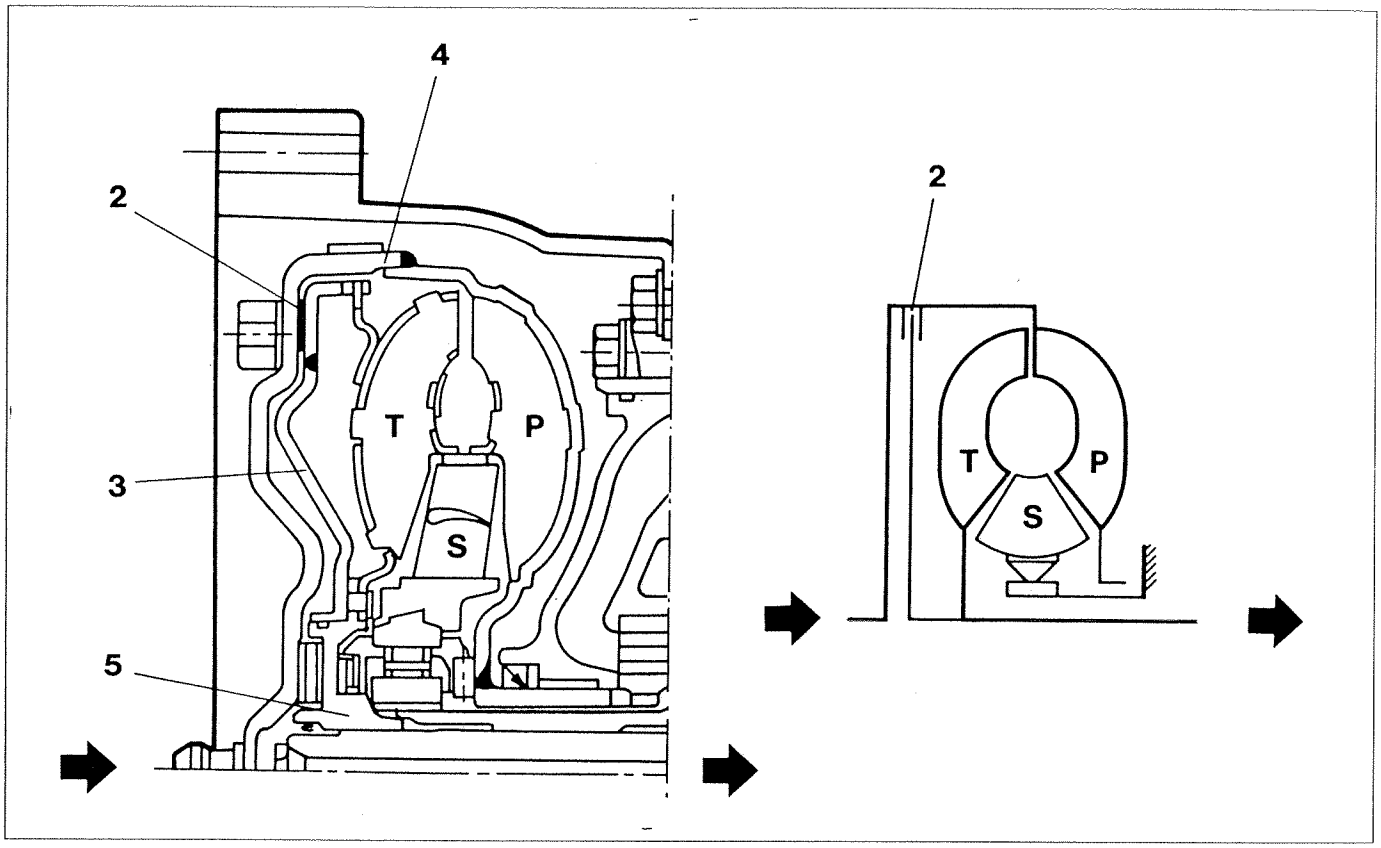

P3U05GB01

1. Converter centring hub
2. Clutch
3. Clutch engagement piston
4. Converter cover
   T = Turbine
   P = Pump
   S = Stator
5. Turbine hub

Copyright Fiat Auto

Clurch off (A)
The oil circulating inside the converter acts with the same pressure on the rear b and front a of the piston (3) which engages the clutch (2): the turbine (T) is free to rotate in relation to the cover (4) of the converter, joined to the pump (P).

Clutch on (B)
The control unit drives a solenoid which causes a reduction in pressure on the rear area b, so the piston (3) slides and locks the clutch (2). In this way the turbine (T) is joined to the convereter cover (4) and the relative slip is eliminated.

During gear changes, the lock-up clutch is controlled in a modulated manner. During this stage, the pressure in the area b is regulated so as to permit a very slight "controlled" slipping between the pump and turbine. This slipping absorbs the irregularities of delivery of the driving torque of the engine without having to use a specific torsional damper, thus ensuring optimum driving comfort.

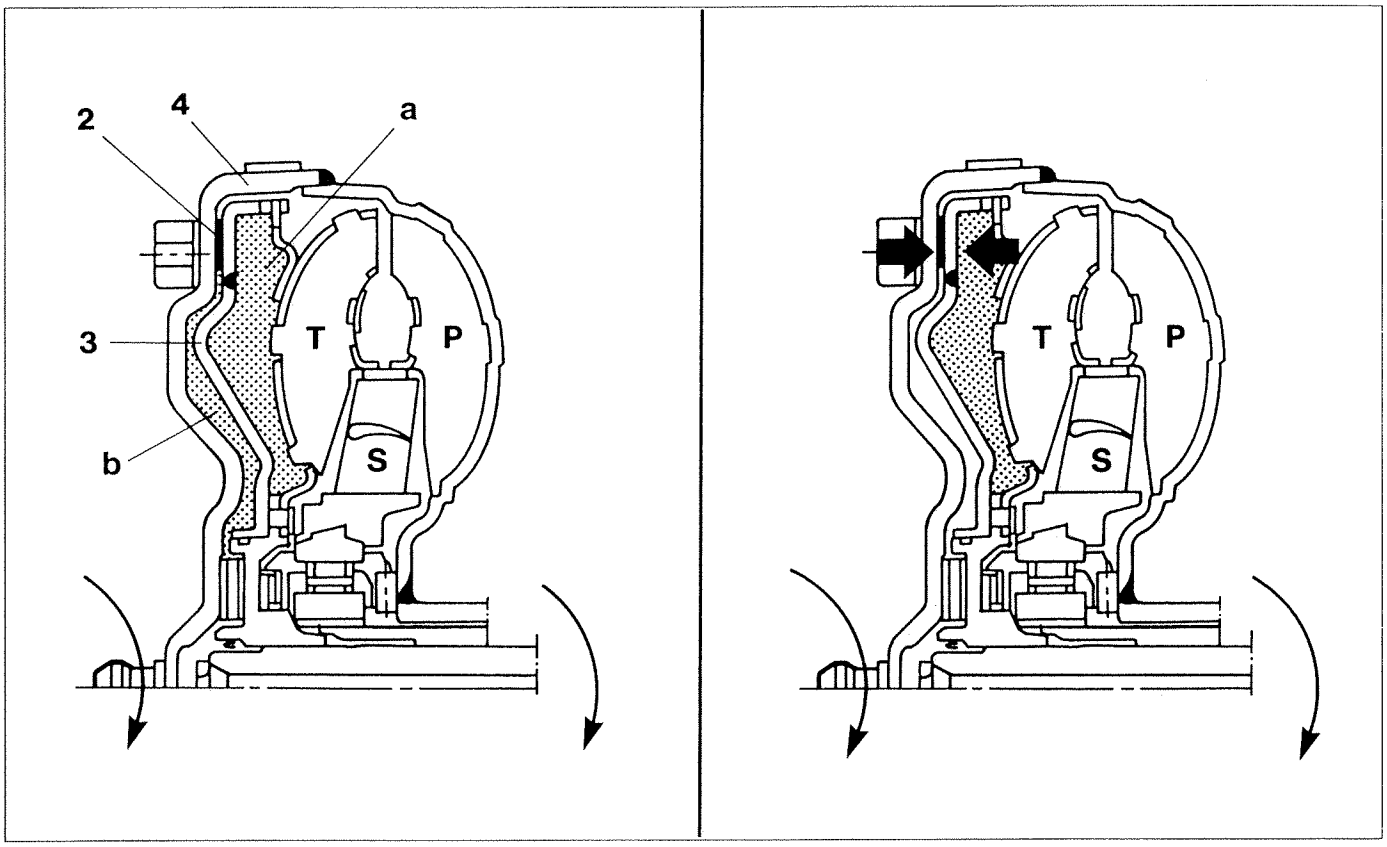

P3U06GB01

2. Clutch
3. Clutch engagement piston
4. Converter cover
   T = Turbine
   P = Pump
   S = Stator

a. space in front of piston (3)
b. space at rear of piston (3)

nM = engine rpm
nT = turbine rpm

Control components

The gearbox control components comprise the brakes, which prevent relative rotation between a gear component and the outer casing, and the clutches, which prevent relative rotation between two gear components. They are controlled in an appropriate manner to obtain the four forward gear ratios and reverse gear.
The multiple disc clutches and brakes are locked hydraulically by the oil under pressure, while they are unlocked by the mechanical action of a Belleville washer which acts on the piston.
The hydraulic operation with oil bath allows the driving torque to be transmitted without wear; these components therefore do not require periodical adjustment.
In particular, the clutches are controlled by the variations in pressure which act on both piston surfaces.

Both the space a at the front of the piston and the space b at the rear of the piston are supplied with oil under pressure, through specific ducts.
The clutch is locked by maintaining in space b a sufficient pressure to overcome the effect of the spring and the pressure existing in the space a.
If this pressure is not present, the spring causes the clutch to unlock.
This technology ensures:
- certainty of clutch unlocking at all speeds;
- particularly smooth gear changes.

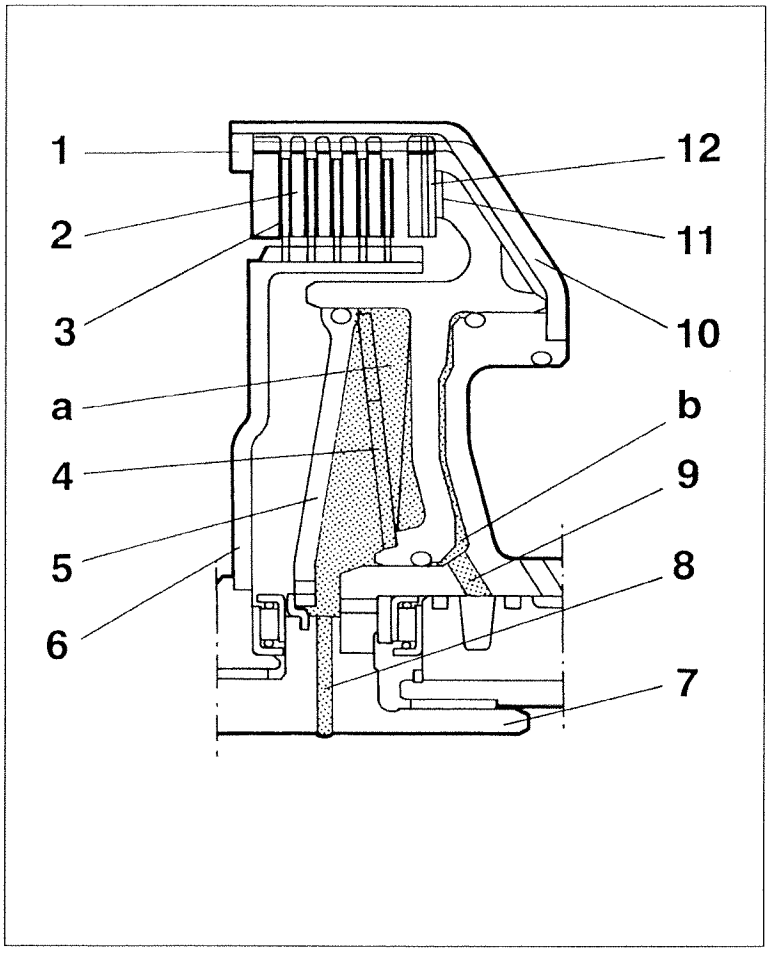

P3U07GB01

1. Stop ring
2. Steel disc
3. Friction disc
4. Belleville washer
5. Stop disc
6. Disc drum
7. Input shaft
8. Oil feed front space a
9. Oil feed rear space b
10. Cylinder (bell)
11. Piston
12. Pressure plate

a. space at front of piston (11)
b. space at rear of piston (11)

21.-27.

Layout and functions of control components

Clutch E: transmits driving torque to gear set 1
Clutch B: transmits driving torque to gear set 2

Brake C: blocks the sun wheel P2
Brake D: blocks the gear train carrier T2 - crownwheel H1
Brake F: blocks the sun wheel P1

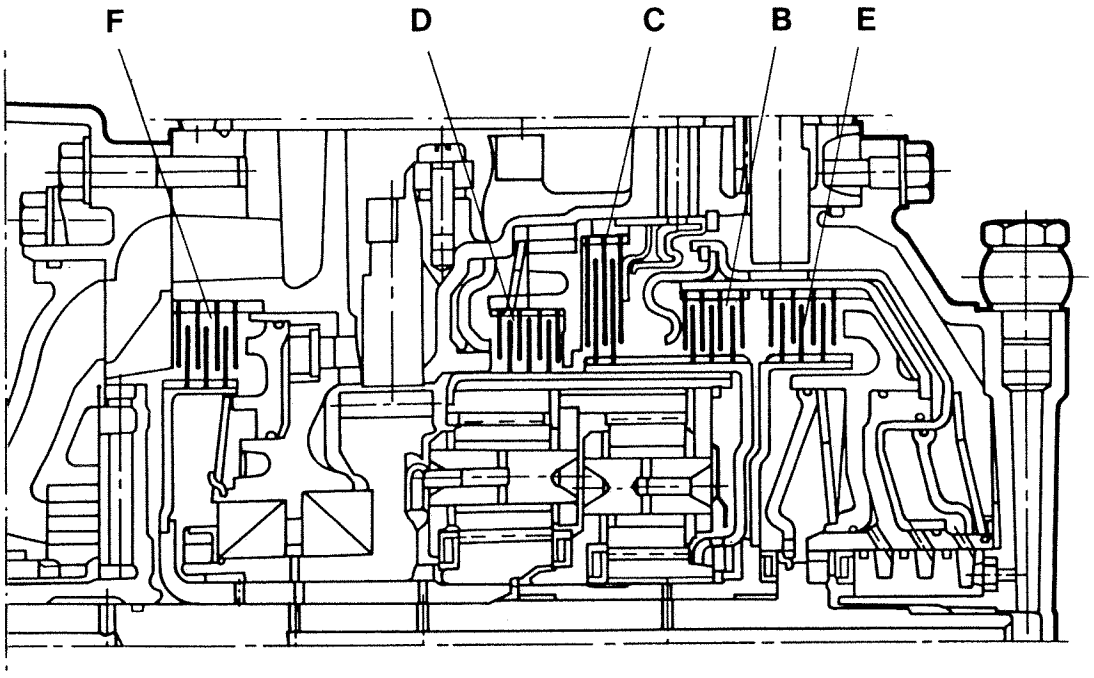

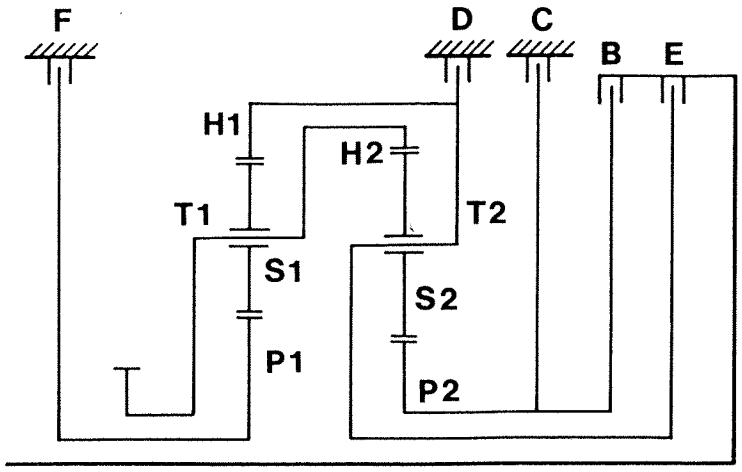

P3U08GB01

Epicyclic gear sets

To obtain five transmission ratios (four forward gears and reverse gear), the gearbox uses two simple epicyclic gear sets, known as gear set 1 and gear set 2.
These gear sets are connected to each other so that the crownwheel H1 is joined to the gear train carrier T2 and the crownwheel H2 is joined to the gear train carrier T1.
The different ratios are obtained by transmitting the driving torque through some components of the assembly, while at the same time locking others.
The torque enters via the gear train carrier T2, the sun wheel P2 or both, while it always emerges through the gear train carrier T1.

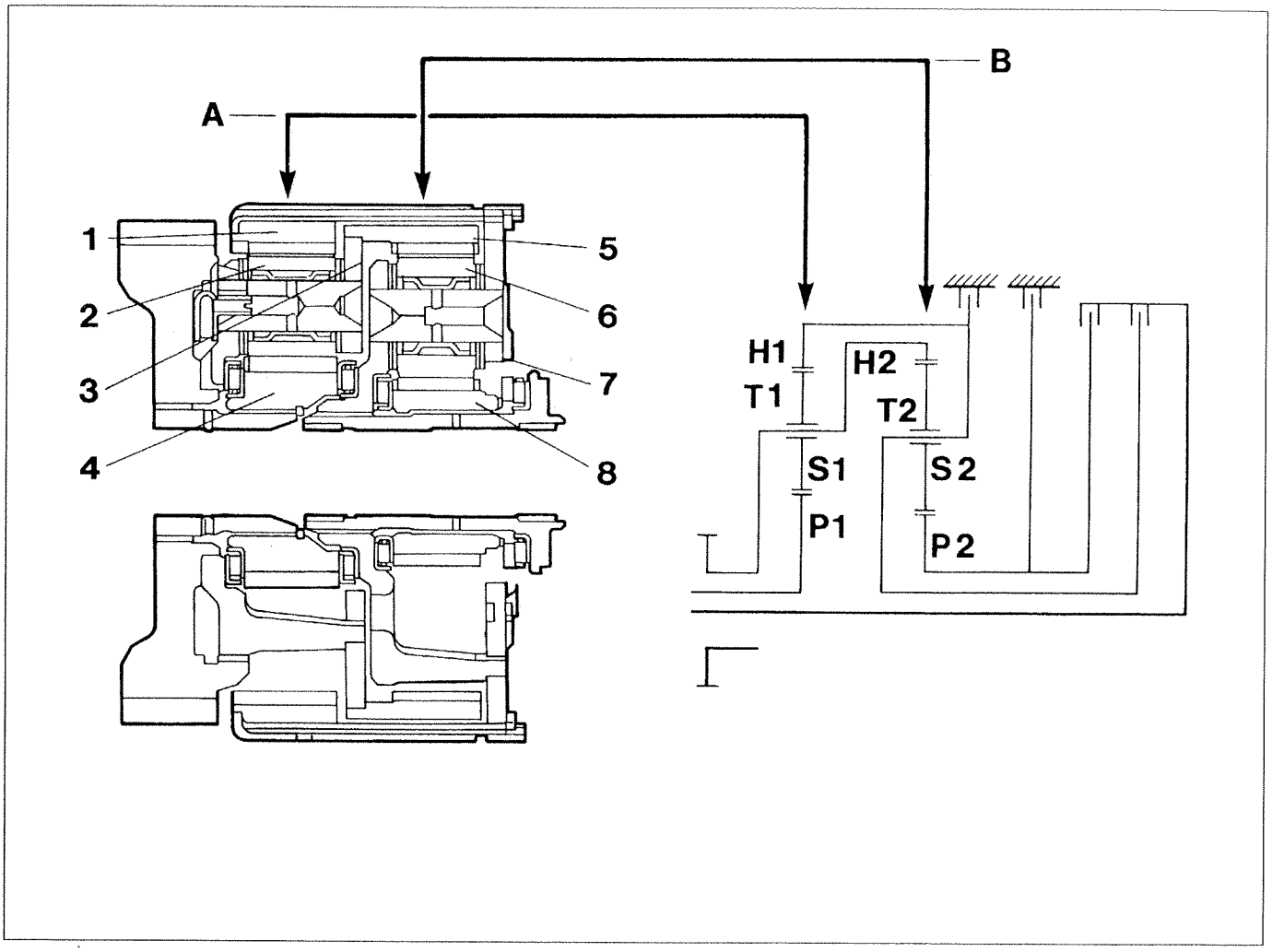

P3U09GB01

A: gear set 1
B: gear set 2

1. Crownwheel H1
2. Planet gear S1
3. Gear train carrier T1
4. Sun wheel P1
5. Crownwheel H2
6. Planet gear S2
7. Gear train carrier T2
8. Sun wheel P2

Copyright Fiat Auto

Parking lock

This is a mechanical lock which acts on the intermediate gearbox output shaft.
It consists of a ratchet (1) which engages in a specific toothed wheel (2), on the same axis as the intermediate output shaft. The ratchet is engaged by means of a linkage (3) connected to the selector lever, whenever the P (parking) position is selected.
The particular shape of the teeth prevents any accidental engagement of the ratchet while the vehicle is moving.

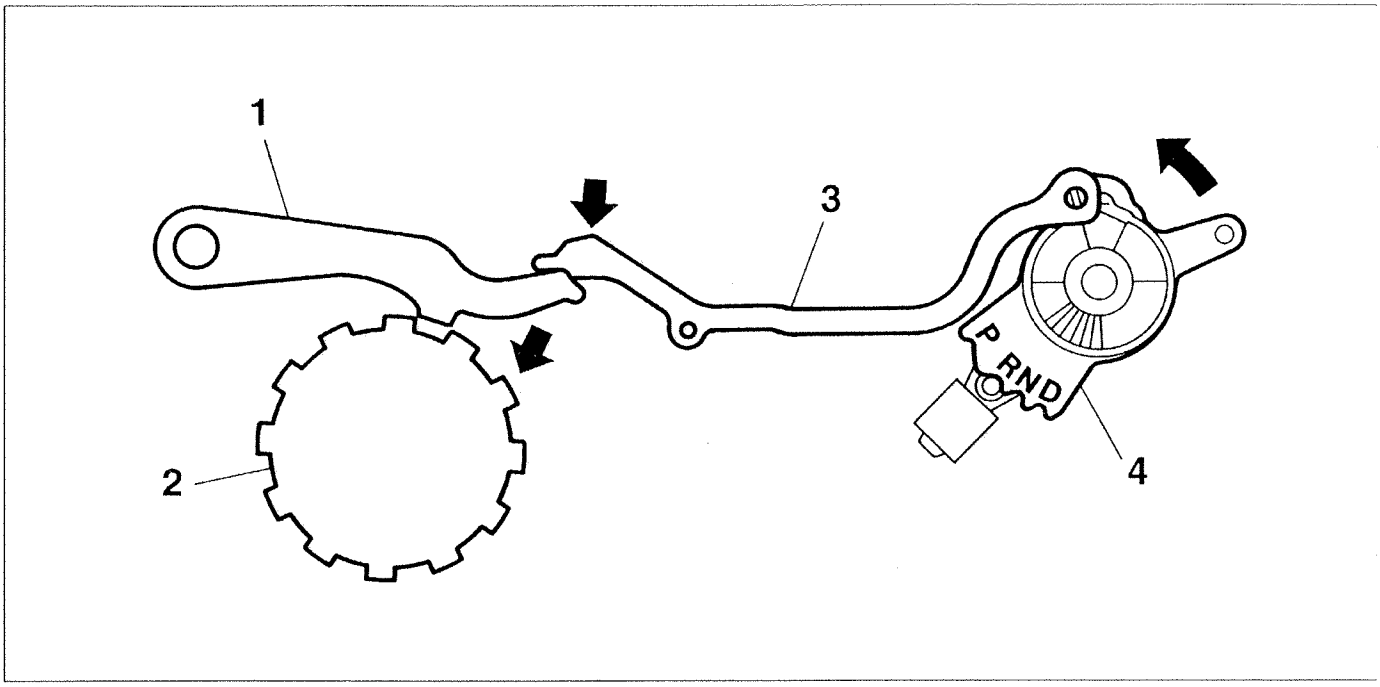

P3U10GB01

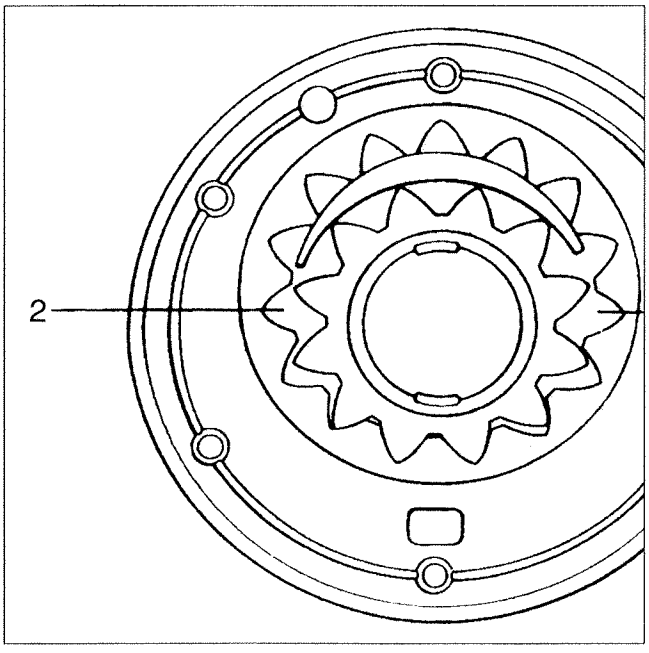

P3U10GB02

Oil pump

The oil pump used for the ZF automatic transmission is of the internal gear type.
It is located between the torque converter and the gearbox casing, and is driven directly by the converter's pump.

The oil pump carries out the following functions:
- it provides the necessary pressure to the hydraulic control system and the gearchange components (clutches and brakes);
- it sends a flow of oil into the torque converter casing to cool it;
- it lubricates the gearbox's moving parts;
- it circulates oil in the cooling system.

1. Inlet side
2. Delivery side

TRANSMISSION OF DRIVE

The following diagrams illustrate the transmission of drive under the various driving conditions, indicating the control and check components necessary for obtaining the different transmission ratios.

The table below gives a summary of the activated components in relation to the gear engaged and the position of the selector lever and/or manual rocker control.

lever position	gear ratio	lock-up clutch	clutch B	clutch E	brake C	brake D	brake F
P							
R			O			O	
N							
D	1		O				O
	2	O (*)		O			O
	3	O (*)	O	O			
	4	O (*)		O	O		

(*) On or off depending on the operating conditions

Neutral (selector lever on position N)

All the clutches and braking system are off, so drive is not transmitted to the epicyclic gear sets and so to the output shaft.

The parking lock is off, so the vehicle can start moving if it is on a slope.

Parking (selector lever on position P)

The only difference in relation to the above condition is that the parking lock (P) is on, preventing any movement of the vehicle.

Copyright Fiat Auto

21.-27.

First gear

The driving torque is transmitted through the torque converter and clutch B to the sun wheel P2 and, through the planet gear S2, to the outer crownwheel H2, which is joined to the gear train carrier T1. As the sun wheel P1 is locked by the brake F, the planet gears S1 rotate on it, driving the gear train carrier T1 and so the output pinion.

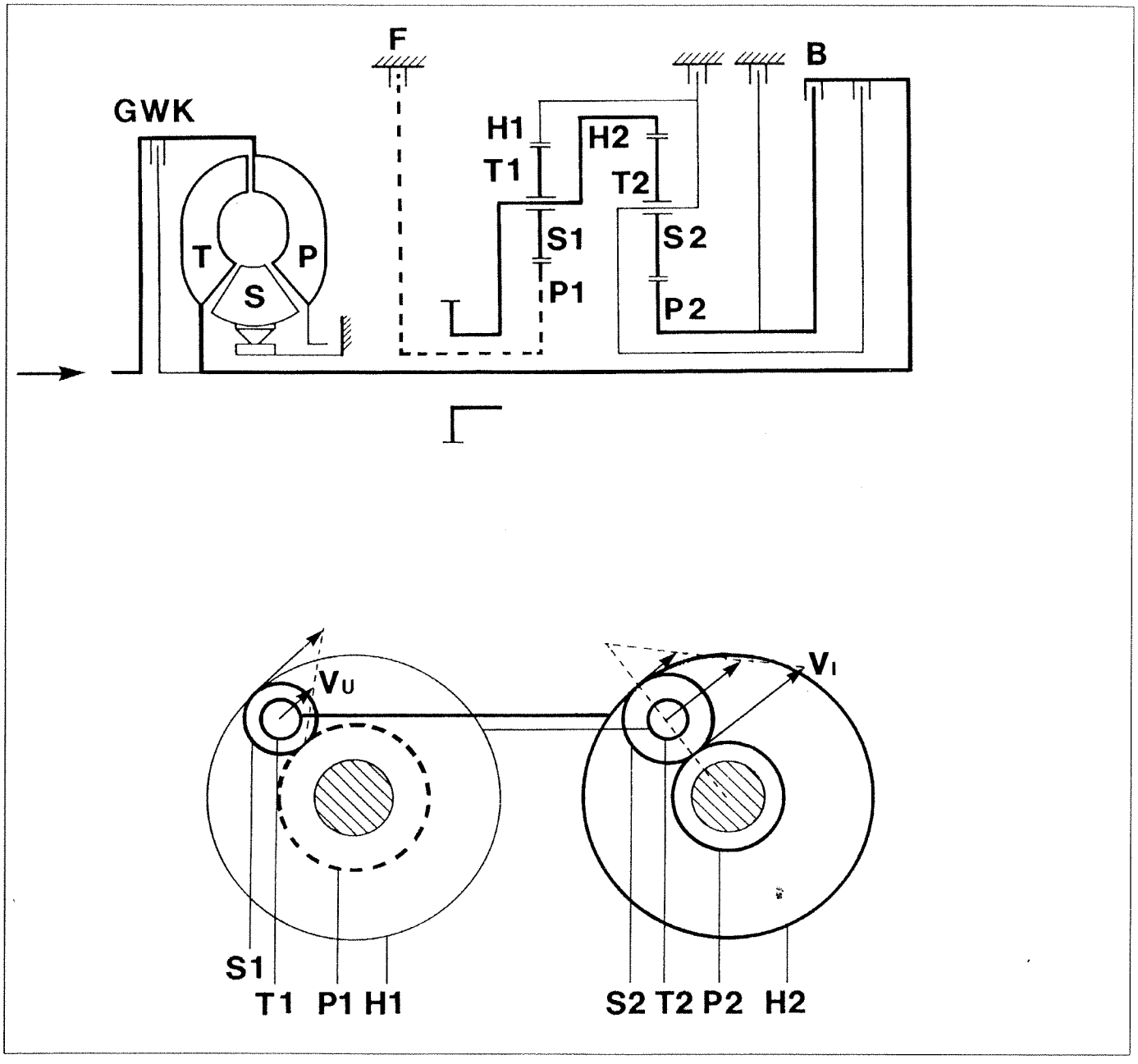

P3U12GB01

lock-up clutch	clutch B	clutch E	brake C	brake D	brake F
off	on	off	off	off	on

Second gear

The driving torque is transmitted through the torque converter or, depending on the conditions, by the lock-up clutch, and the clutch E to the gear train carrier T2, joined to the crownwheel H1.
As the sun wheel P1 is locked by the brake F, the crownwheel H1 rotates the planet gears S1 on it, driving the gear train carrier T1 and so the output pinion.

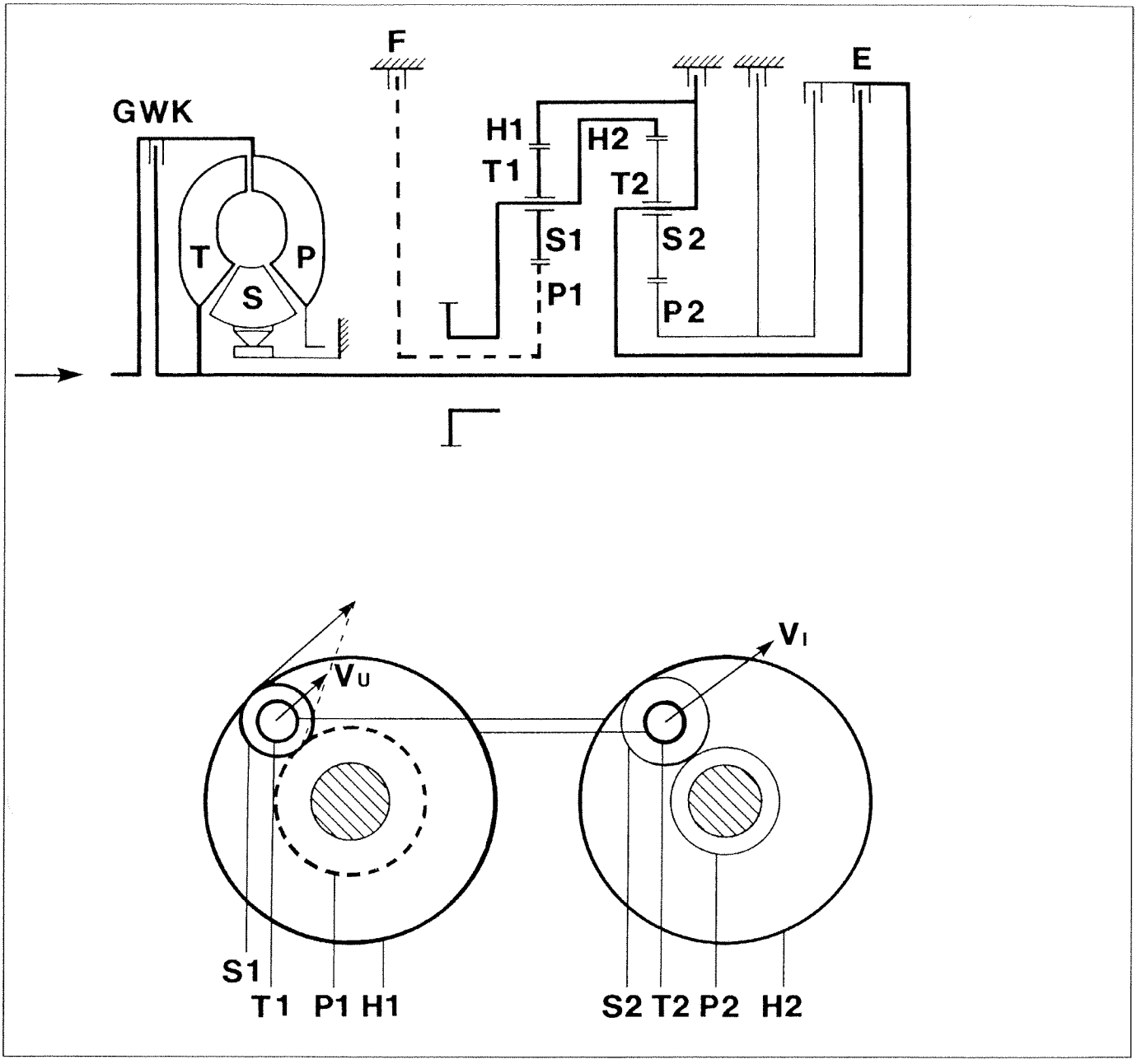

P3U13GB01

lock-up clutch	clutch B	clutch E	brake C	brake D	brake F
off or on	off	on	off	off	on

Copyright Fiat Auto

Third gear

The driving torque is transmitted through the torque converter or, depending on the conditions, by the lock-up clutch, to both clutches B and E.
As these are on, both gear sets, and so the output pinion, rotate as a block at the same speed.

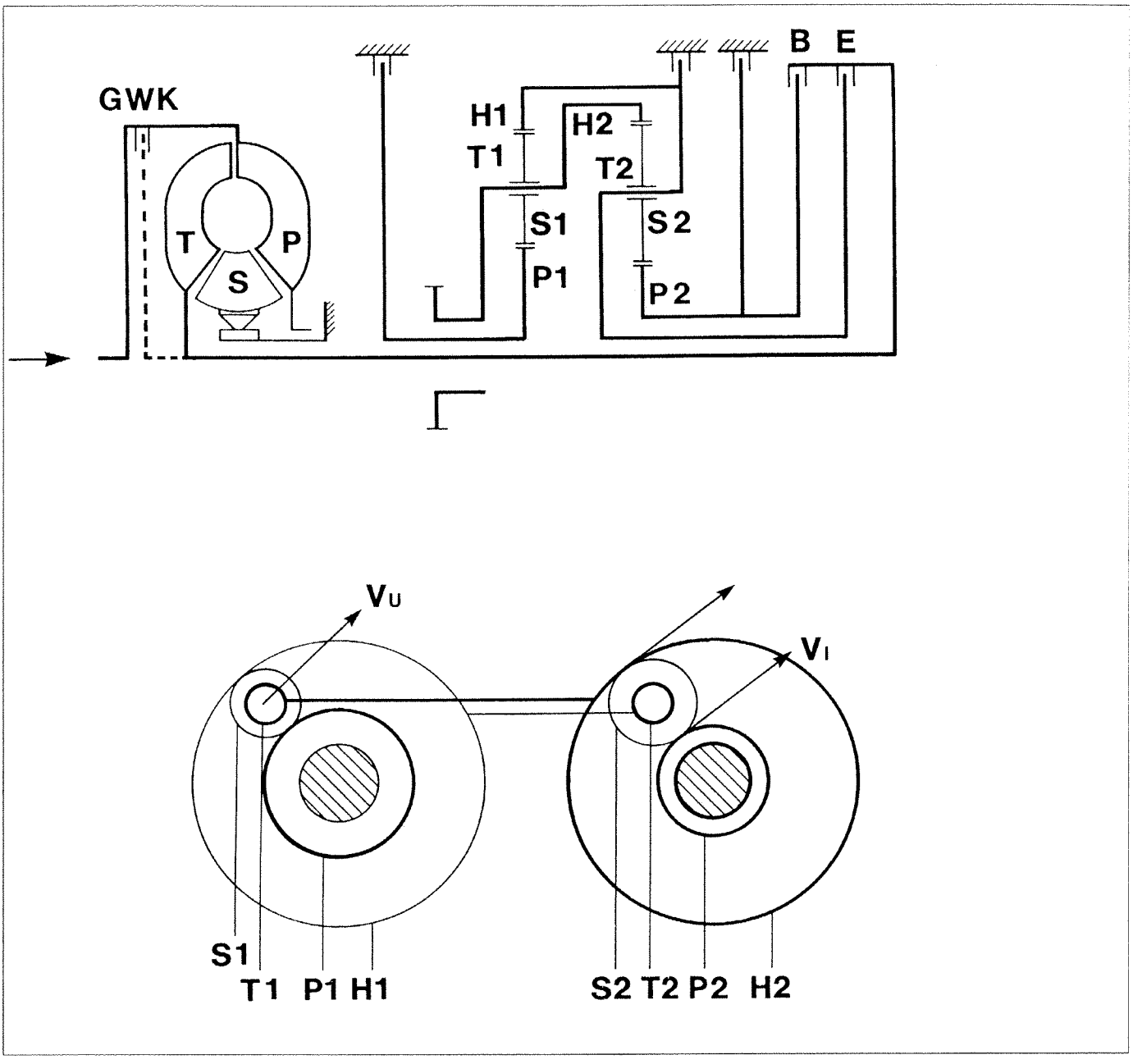

P3U14GB01

lock-up clutch	clutch B	clutch E	brake C	brake D	brake F
on or off	on	on	off	off	off

Fourth gear

The driving torque is transmitted through the torque converter or, depending on the conditions, by the lock-up clutch, and the clutch E to the gear train carrier T2.
As the sun wheel P2 is locked by the brake C, the planet gears S2 rotated on it, driving the crownwheel H2, which is joined to the gear train carrier T1, and so the output pinion.

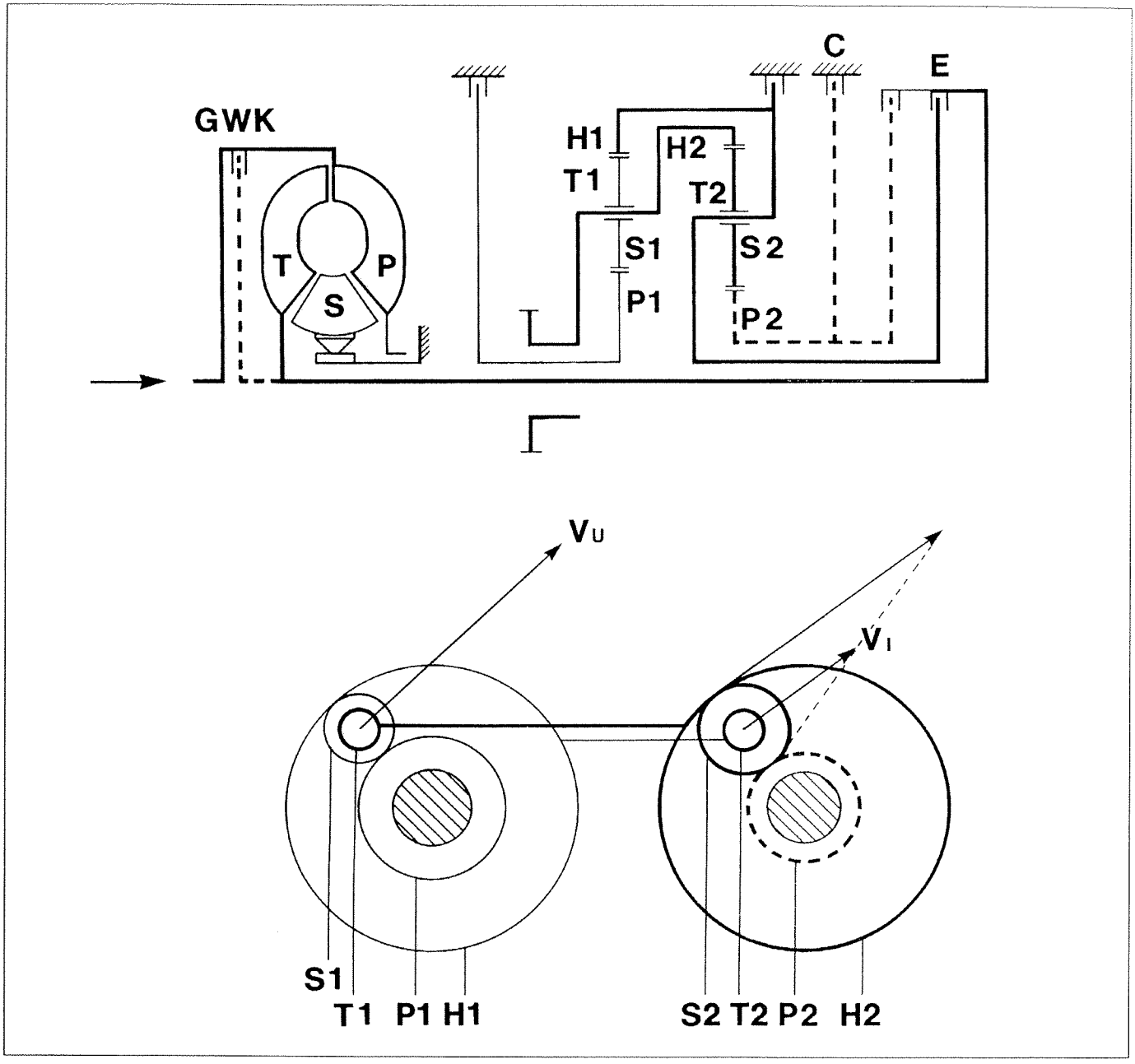

P3U15GB01

lock-up clutch	clutch B	clutch E	brake C	brake D	brake F
off or on	off	on	on	off	off

Copyright Fiat Auto

Reverse

The driving torque is transmitted through the torque converter and the clutch B to the sun wheel P2 which makes the planet gears S2 rotate.
As the gear train carrier T2 is locked by the brake D, the planet gears S2 drive the crownwheel H2, and so the output pinion, in the opposite direction to the sun wheel S2.

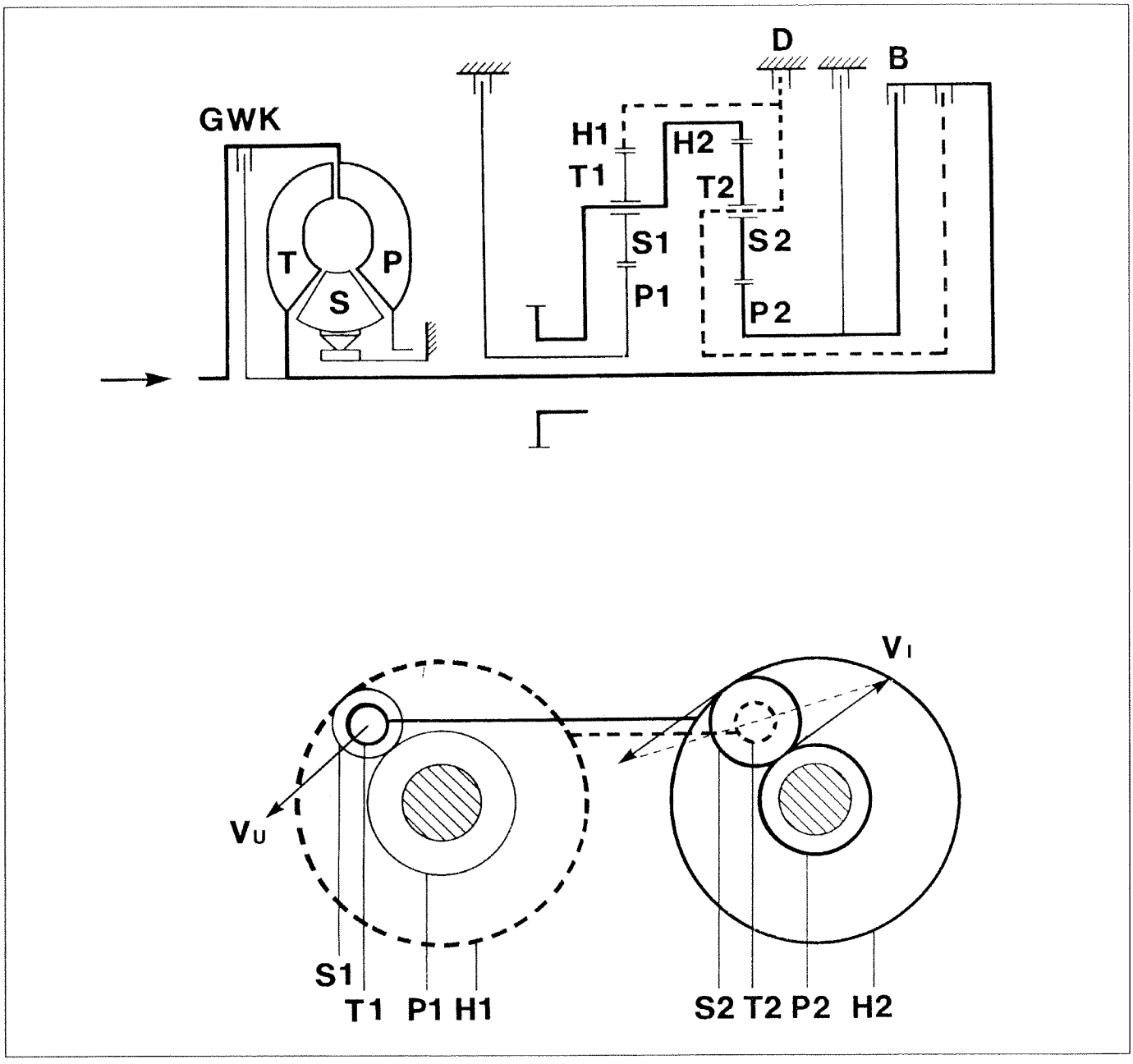

P3U16GB01

lock-up clutch	clutch B	clutch E	brake C	brake D	brake F
off	on	off	off	on	off

CONTROL SYSTEM

The control system consists of a TCM gearbox control unit, a set of sensors and electrical connections which transmit to the control unit the information necessary for identifying the operating conditions, and a set of solenoids (two control and four check) which, controlled by the TCM control unit in accordance with the strategies it contains, drive the hydraulic valves in the hydraulic unit to obtain the desired gearbox operation.
The control system also manages fault diagnosis and transmits a set of information to the instrument panel.

Location on the vehicle of the components of the gearbox control system

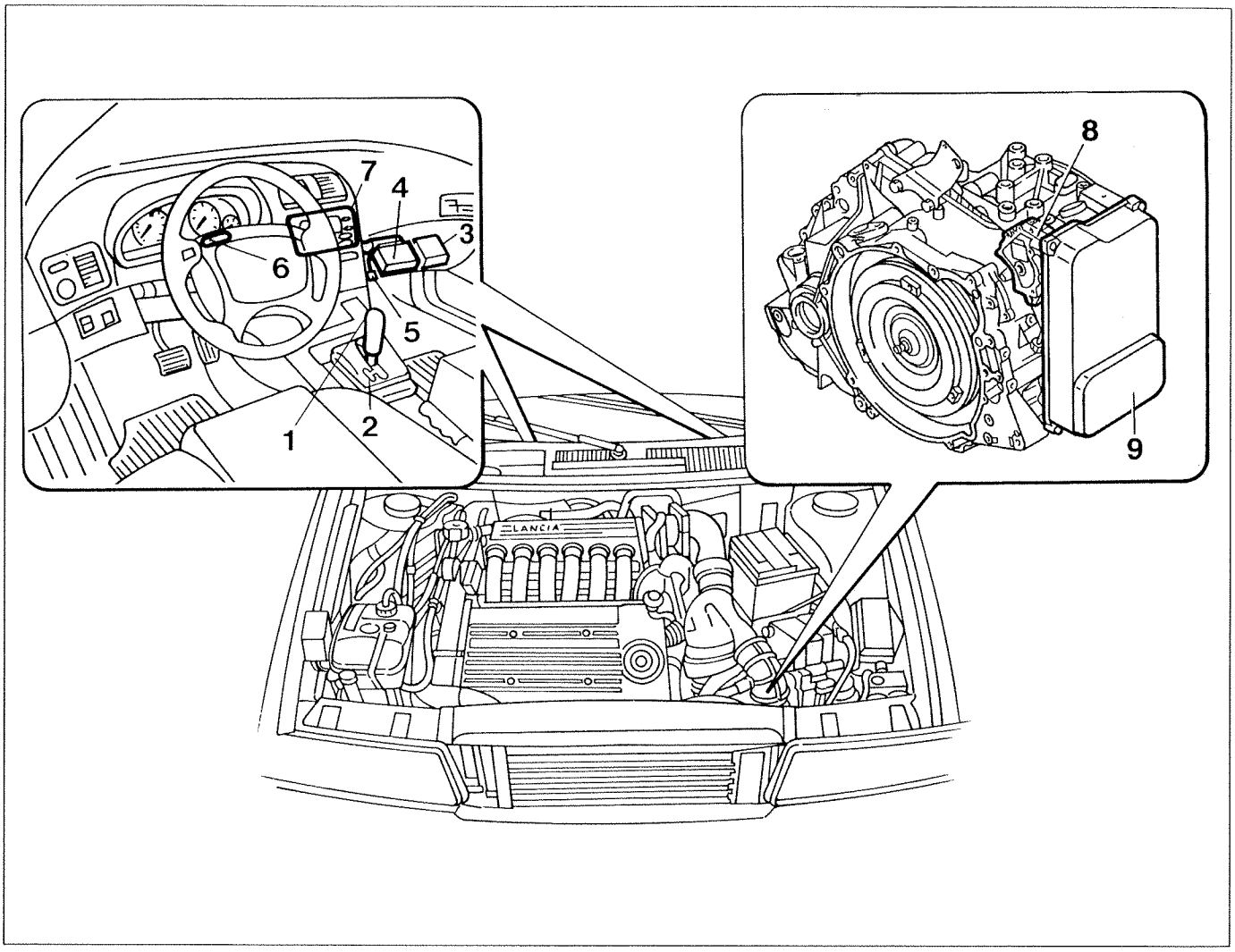

P3U17GB01

1. Selector lever
2. Manual selector
3. Engine control unit
4. Gearbox control unit
5. Diagnostic socket
6. Instrument panel
7. INFOCENTER
8. Selector lever position sensor
9. Hydraulic unit with solenoids

GEARBOX CONTROL UNIT

The (TCM) gearbox control unit contains the logic and control electronics of the automatic transmission, in which the various functions are memorized, and is located under the dashboard, on the passenger side.
The TCM receives information concerning the operation of the automatic transmission from the various switches and sensors located on the gearbox and dashboard, and manages the exchange of information with the fuel injection-ignition system.
On the basis of the signals received, the TCM processes and issues appropriate commands to the solenoids located at the top of the automatic transmission, for carrying out gear changes, and to the electronic fuel injection/ignition control unit for reducing the driving torque.
The TCM also manages the displays on the instrument panel.

Block diagram of gearbox control unit functions

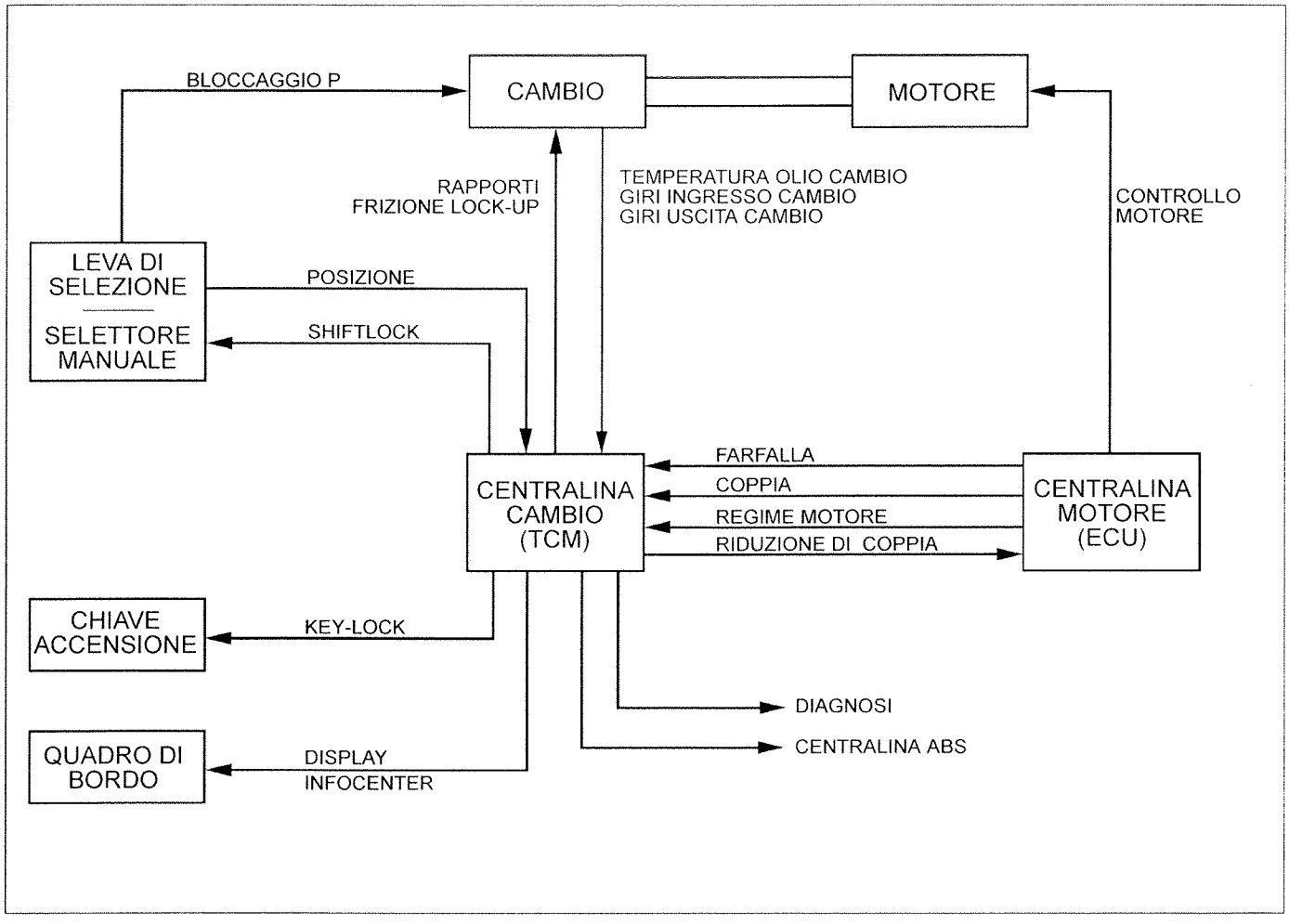

P3U18GB01

ZF 20HP4 GEARBOX CONTROL UNIT PINS

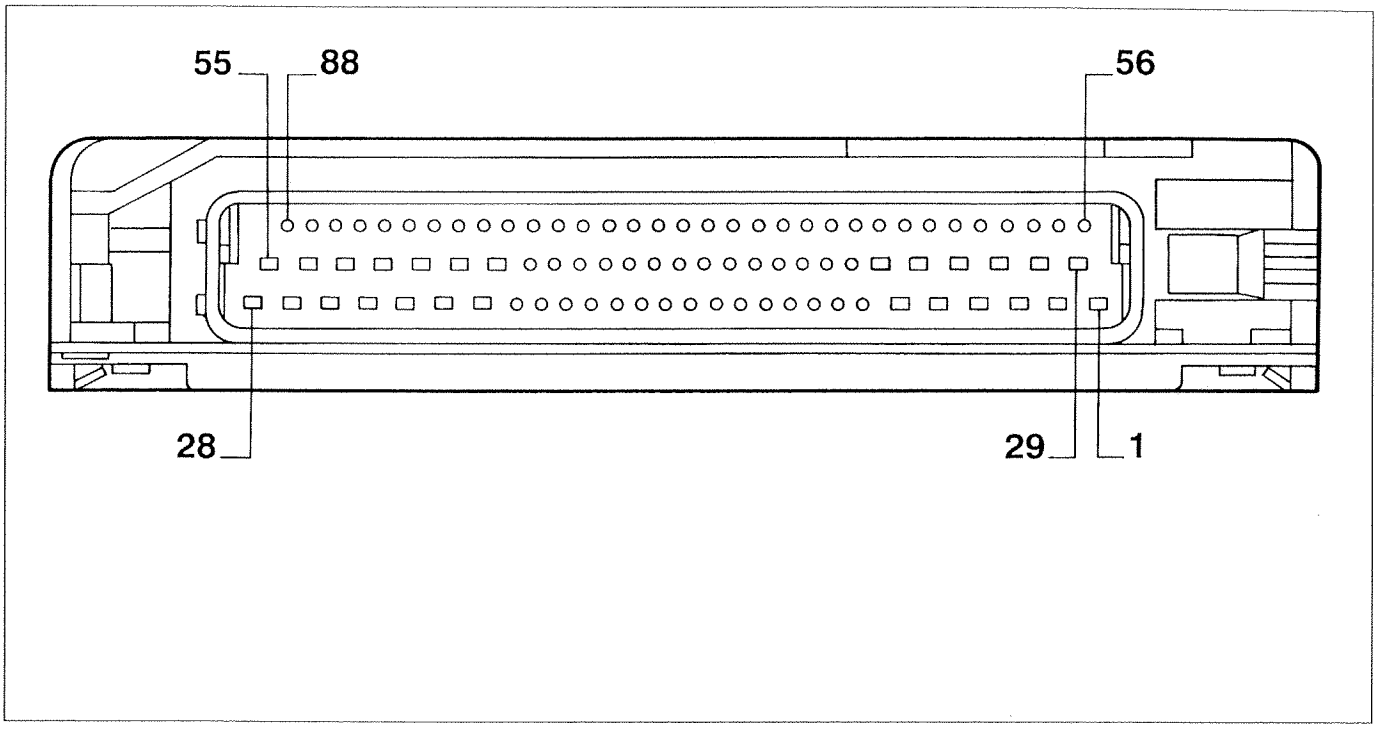

P3U19GB01

1. Earth for pressure regulator REG2
2. Buzzer signal
3. Pressure regulators positive
4. Earth for pressure regulator REG4
5. Earth for pressure regulator REG1
6. Power earth
8. Selector lever position L2
9. Selector lever position L4
12. Manual selector change-up signal
13. Manual selector change-down signal
14. Earth for gearbox output rpm sensor
15. Earth for gearbox output rpm sensor braid
16. Gearbox input rpm sensor signal
21. Oil temperature sensor earth
22. Oil temperature sensor signal
23. Earth for gearbox input rpm sensor braid
25. Instrument panel connection
28. Digital earth
29. Earth for pressure regulator REG3
30. Earth for solenoid EV1
31. Ignition-dependent positive (MAR)
32. Shift lock signal
33. Earth for solenoid EV2
34. Power earth
35. Manual selector enablement signal
36. Selector lever position L1
37. Selector lever position L3
42. Gearbox output rpm sensor signal
44. Earth for gearbox input rpm sensor
45. Driver's door switch
49. Key lock signal
50. K serial line
52. Solenoids positive
54. Ignition-dependent positive (MAR)
55. Battery positive
81. Earth for CAN line shield
82. Linea CAN h2 (ABS)
83. Linea CAN I2 (ABS)
84. Massa schermatura linea CAN
85. Linea CAN I1 (Motronic)
86. Linea CAN h1 (Motronic)

Copyright Fiat Auto

DIAGRAM OF INPUT/OUTPUT INFORMATION BETWEEN THE TCM GEARBOX CONTROL UNIT AND THE SENSORS/ACTUATORS

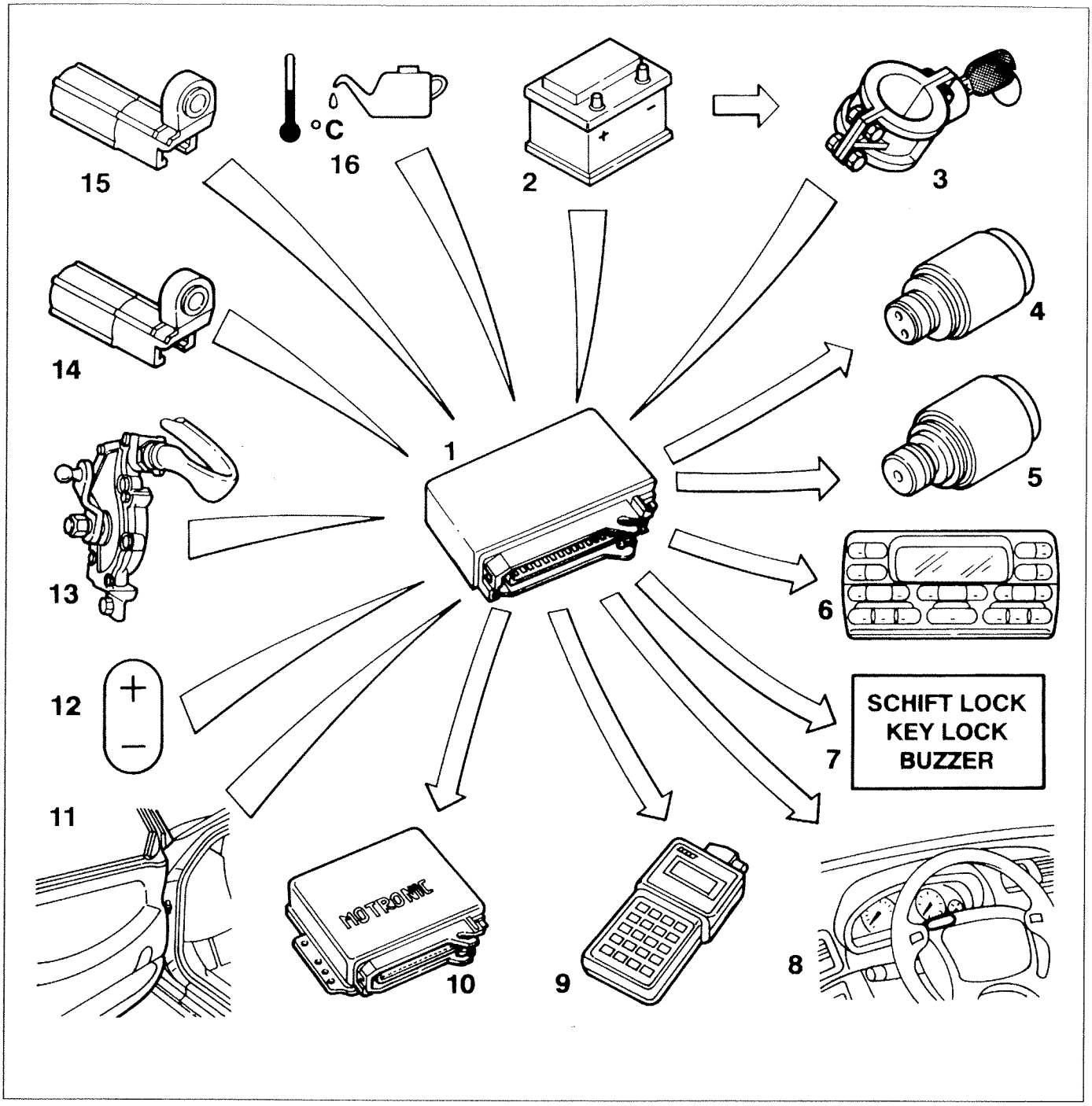

P3U20GB01

1. TCM gearbox control unit
2. Battery
3. Ignition switch
4. Regulating valve (REG)
5. Solenoid (EV)
6. INFOCENTER
7. Safety functions
8. Instrumentation
9. Diagnostic instrument
10. Engine control unit
11. Driver's door switch
12. Manual selector switch
13. Selector lever switch
14. Gearbox input speed sensor
15. Gearbox output speed sensor
16. Gearbox oil temperature sensor

OPERATING STRATEGIES

The TCM gearbox control unit drives the brake and clutch control solenoids and the other actuators thanks to the strategies memorized in it in accordance with the signals received from the system's sensors.
The system is characterized by two operating modes:
A: fully automatic operation, with lever position in D;;
B: manual gear selection with selection of the gear to be engaged by manual selector and with supervision of the system to prevent errors.
For this, the following programs are implemented in the control unit:
1. automatic driving mode (DSP)
2. winter driving mode (WNT)
3. warm-up driving mode (WML)
4. high oil temperature safety feature (SKT)
5. manual driving mode (TIP)

Except for program no. 5 (TIP), all the others are recognized and activated automatically by appropriate recognition strategies.

Automatic driving mode (DSP)

There are twelve mapped settings, in relation to the type of journey and the type of use of the vehicle.

The **type of journey** is divided into four types (factor B): downhill (DOWNHILL, B0), flat (FLAT ROAD, B1), medium uphill (UPHILL, B2), strong uphill (STRONG UPHILL, B3).
The **type of use** of the vehicle is divided into three levels of sportivity (factor S): LOW (S1), MEDIUM (S2) and HIGH (S3) SPORTIVITY.
Each **type of journey-type of use** combination identifies a specific mapped setting which contains the most suitable gear change speeds and lock-up clutch status for optimum operation of the vehicle under those conditions. The following table gives the full picture of the combinations in accordance with the **type of journey** (factor B) and **type of use** (factor S).

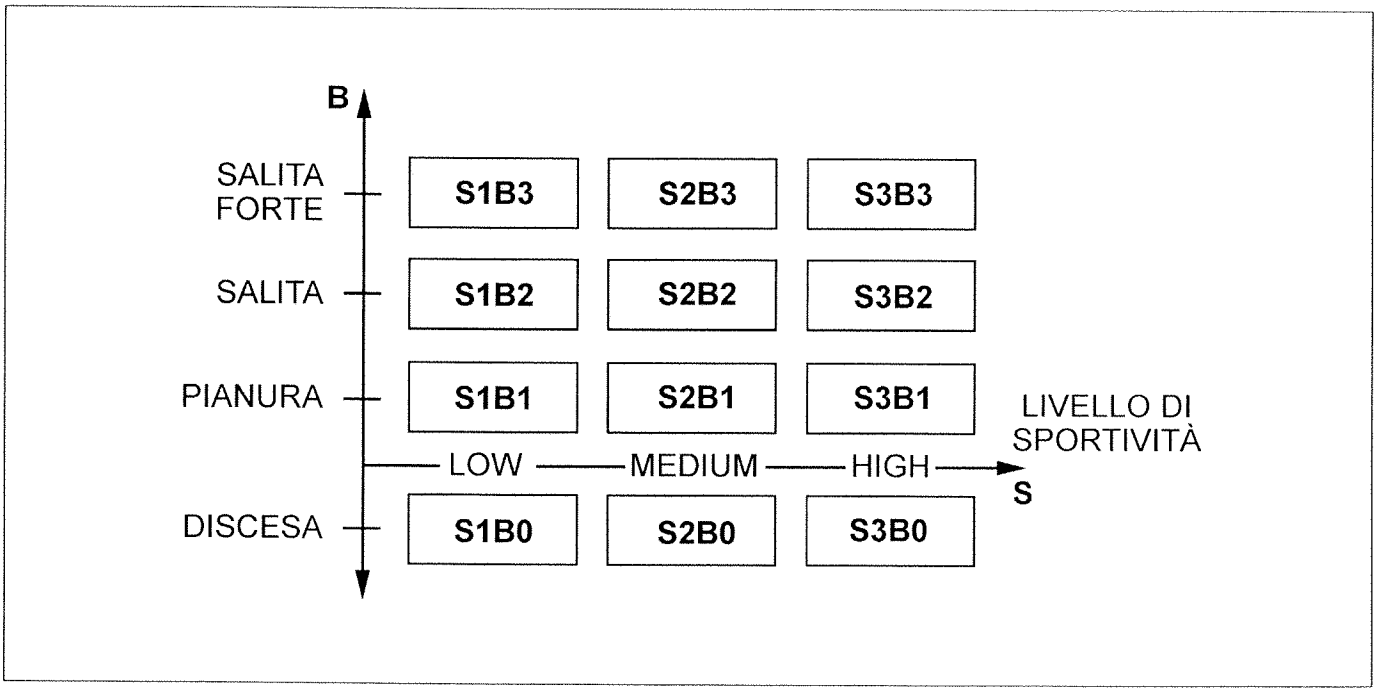

P3U21GB01

Copyright Fiat Auto

After identifying the specific mapped setting corresponding to the vehicle's driving conditions, the gear change program defines the gear change speeds and the lock-up clutch status, interpolating on the mapped setting identified in accordance with the throttle aperture and vehicle speed.

The most suitable mapped setting is identified automatically via the self-adaptation strategies.

Self-adaptation to the load
The system can recognize the type of journey in accordance with the engine load, comparing it with flat road conditions.
Gradient bands are defined, which are associated with the type of journey (factor B). The gradient thresholds are selected so that the vehicle always retains some acceleration capacity.

gradient thrsholds
S–B0 < -4%
-4% < S–B1 < 7%
7% < S–B2 < 14%
S–B3 > 14%

Self-adaptation to type of driving
The system can recognize the driving style by acquiring a set of information (throttle position, speed of operation of accelerator pedal, operation of the brakes, vehicle speed and its acceleration, etc.), assessing the intensity and frequency in time in accordance with appropriate algorithms, deducing a factor S value (sportivity coefficient).

In the automatic driving mode, there are also particular strategies relating to specific operating conditions.

Kick-down
When the accelerator pedal has exceeded an aperture limit (95% of the total), the program recognizes kick-down and selects the specific gear change points on the mapped setting active at that moment.

Inhibition of gear change on bends
The system can recognize whether the vehicle is negotiating a bend under particular critical conditions (lateral acceleration, pedal released, etc.); in these situations, the ratio is kept engaged until the critical situation has ceased to exist.

Fast change-down during braking
The system can recognize the intensity of braking and assess the deceleration of the vehicle. The lowest ratio compatible with the instantaneous driving conditions is thus selected, thus obtaining engine braking.
The rate of change-down is defined in accordance with the intensity of the braking action and with the sportivity factor.

CHANGE 4 - 3

Type of braking	sportivity coefficient		
	S1	S2	S3
repeated	52 km/h	55 km/h	84 km/h
light	52 km/h	65 km/h	100 km/h
medium	52 km/h	125 km/h	115 km/h
strong	90 km/h	155 km/h	160 km/h
emergency	110 km/h	155 km/h	180 km/h

CHANGE 3 - 2

Type of braking	sportivity coefficient		
	S1	S2	S3
repeated	29 km/h	40 km/h	50 km/h
light	35 km/h	40 km/h	70 km/h
medium	50 km/h	80 km/h	110 km/h
strong	50 km/h	100 km/h	110 km/h
emergency	85 km/h	100 km/h	110 km/h

Lock-up clutch
The lock-up clutch is regulated by suitably controlling the relative pump-turbine slip of the converter, until full locking.
The lock-up clutch's operation is managed by a set of parameters which are a function of the operating programme and the gear engaged.
Each mapped setting contains specific management curves which define the activation, control and deactivation of the clutch in accordance with the accelerator position and vehicle speed.
The purpose of controlling the relative slip is to filter the irregularities of the engine; it also ensures an engine braking effect and helps reduce fuel consumption.
If the gearbox oil temperature is high, the lock-up clutch remains deactivated even outside the memorized parameters.

Copyright Fiat Auto

Winter driving mode (WNT)

The winter program is automatically selected in accordance with predefined algorithms.
It imposes set-off in second gear: after start-up, the gears are managed by means of specific mapped settings.

Warm-up driving mode (WML)

The warm-up program is automatically selected if the coolant temperature is below -30°C and the engine speed is below 700 rpm.
The program is deactivated if one of the following conditions arises:
- the engine coolant temperature reaches 34°C
- the driver changes to manual driving mode (TIP)
- after a maximum period of 64 seconds.

It helps speed up engine warming.

High gearbox oil temperature safety (SKT)

The high gearbox oil temperature safety program is automatically selected if the gearbox oil temperatures are over 120°C and is maintained until the temperature falls to below 117°C.
During the activation of this program, particular functions are introduced which can inhibit gear changes or change-downs; however, it is possible to change to manual driving mode (TIP).

Manual driving mode (TIP)

The TIP function allows manual use of the gearbox:
- by operating on the + sign, an upward gear change is obtained (from 1st to 4th);
- by operating on the - sign, a downward gear change is obtained (from 4th to 1st).

Only one gear change is obtained with each action; the gear changes cannot be cumulated.

Gear	Permitted speed range [km/h] for upward gear change	Speed threshold [km/h] for downward gear change
1	0 - 56	-
2	16 - 117	67
3	30 - 176	126
4	41 - max speed	188

The control unit supervises manual actions, limiting the speed range for each change between two thresholds; any action outside the memorized thresholds is not implemented.

In addition, to avoid the engine over-revving or under-revving, the system automatically changes gear upwards or downwards respectively.

Safety functions

Gear change
The control unit supervises manual actions, limiting the speed range for each change between two thresholds; any action outside the memorized thresholds is not implemented.

Engine starting
Engine starting is only permitted with the selector lever on the P or N positions, via the starting enablement relay.

Shift-lock function
To be able to move the selector lever from the P position to another position, press the brake pedal.

Key-lock function
Move the selector lever to the P position to take out the ignition key.

Self-test function

The gearbox control unit has a self-test function.
It constantly monitors the sensors and actuators so as to detect faults and malfunctions immediately; these errors are stored in memory and can be read by means of the diagnostic equipment.

Recovery function

When a fault is detected, the system switches on the red CHECK warning light on the instrument panel to warn the driver, and at the same time it activates some hydraulic and mechanical safety logics so that the gearbox is in a safe condition.
The system assesses the severity of the fault and, if possible, allows the vehicle to be driven so that it can reach a service centre.
For some types of fault, replacement functions are available so as to minimize the reduced functional capacity of the gearbox.

Copyright Fiat Auto

WIRING DIAGRAM OF ZF 20HP4 GEARBOX CONTROL SYSTEM

Key to wiring diagram

1. Multi-purpose switch
2. Gearbox oil temperature sensor
3. Gearbox input speed sensor
4. Gearbox output speed sensor
5. Set of solenoids EV
6. Set of regulating valves REG
7. Reversing lights
8. Starting enablement relay
9. Key-lock signal socket
10. Shift-lock signal socket
11. Buzzer signal socket
12. Instrument panel connection
13. K serial line
14. Driver's door switch
15. Manual selector
16. CAN line low1-high1
17. CAN line low2-high2
18. Vehicle earth
19. Battery positive
20. Ignition-dependent positive (MAR)
21. Gearbox control unit connector

21.-27.

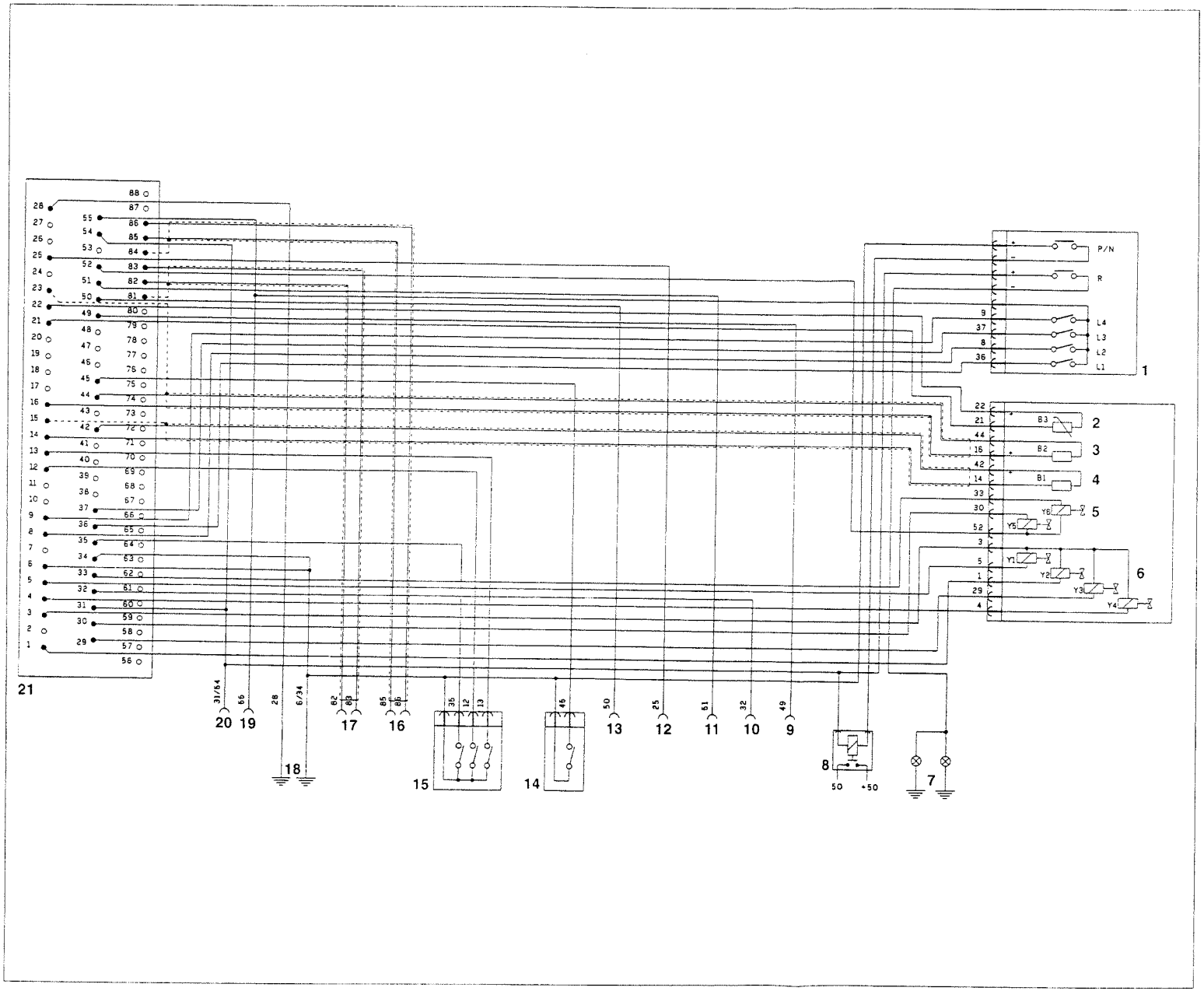

P3U27GB01

SOLENOIDS (EV) AND PRESSURE REGULATING VALVES (REG)

The hydraulic unit has two solenoids and four pressure regulating valves driven electrically by the gearbox control unit.
By combining the commands to the valves and solenoids in an appropriate manner, the gearbox's different operating conditions are obtained, in accordance with the table below.

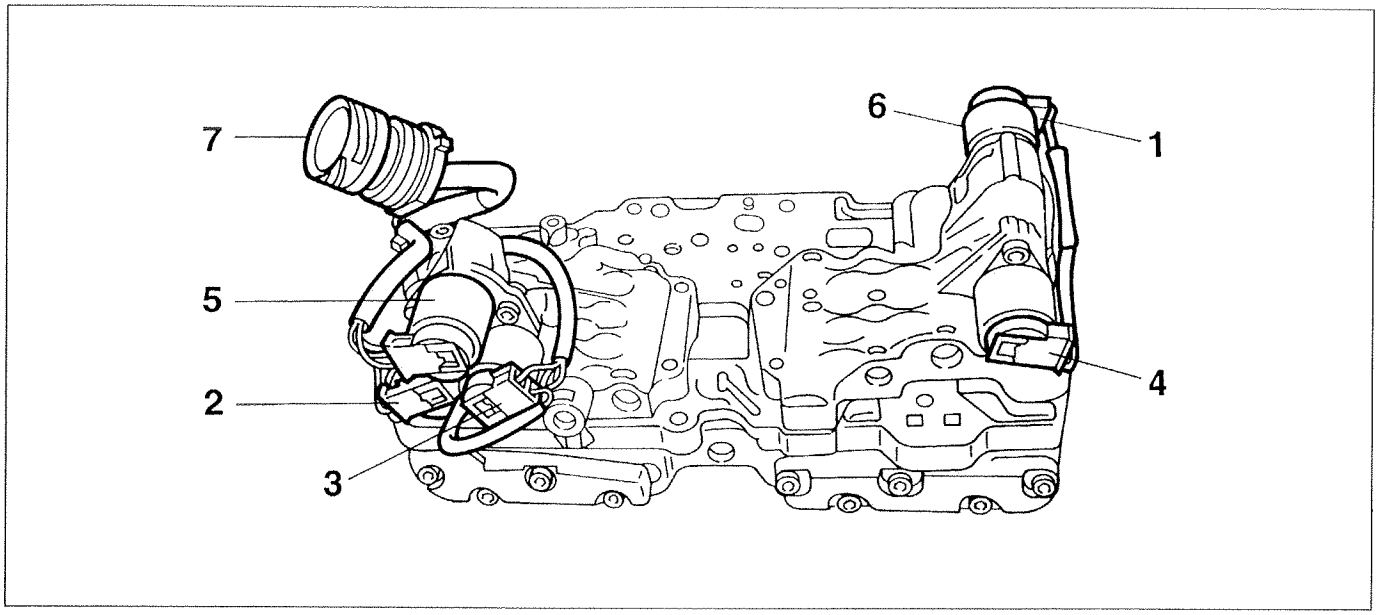

P3U28GB01

Location of solenoids and pressure regulating valves on the hydraulic unit

1. EV1
2. EV2
3. REG1
4. REG2
5. REG3
6. REG4
7. Wiring connector

Lever position	gear	EV1	EV2	REG1	REG2	REG3	REG4
P		O	O		O		O
R		O	O				
N		O	O		O		O
D	1	O	O		O	O	O
	2	O		O (*)	O	O	
	3	O		O (*)	O		O
	4	O		O (*)			

Table summarizing the activated components

O = component ON
(*) Depending on the operating conditions (lock-up clutch control).

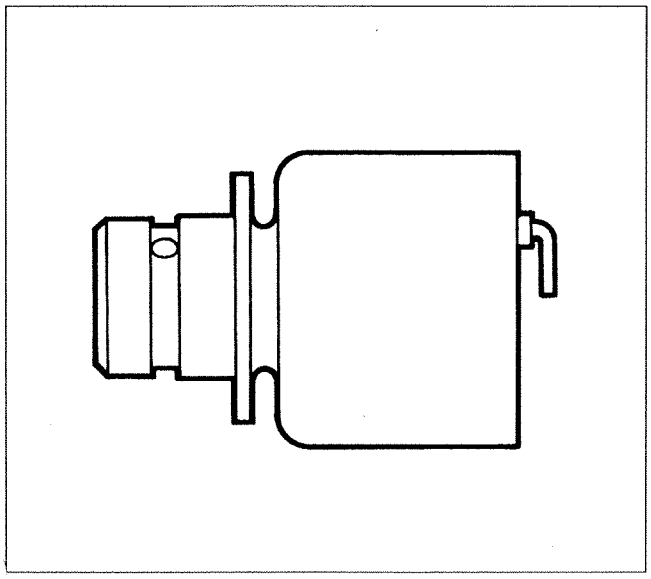

P3U29GB01

Solenoid valves (EV)

The solenoid valves are the NC 3-way type with 2 positions: they open when the control unit earths the winding: their operation is therefore the ON-OFF type.
The solenoid valves are designed to supply the hydraulic valves inside the unit.

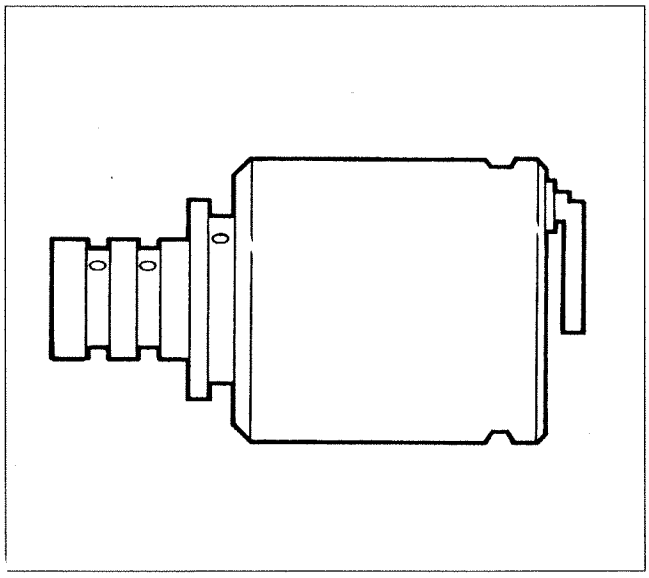

P3U29GB02

Pressure relief valves (REG)

These are proportional valves, which supply a pressure proportional to the intensity of the supply current.
These valves operate the hydraulic valves inside the unit.

NOTE *Valves REG1, REG3 and REG4 are directly proportional, whilst valve REG2 is inversely proportional.*

Copyright Fiat Auto

21-27.

1

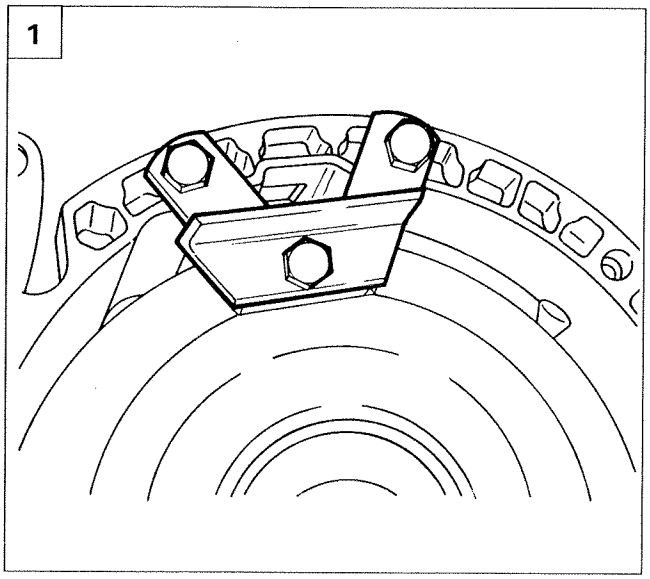

P3U30GB01

2

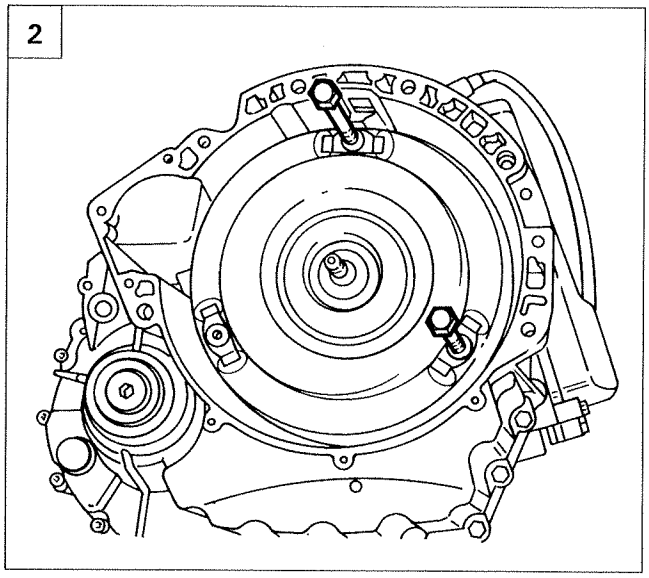

P3U30GB02

3

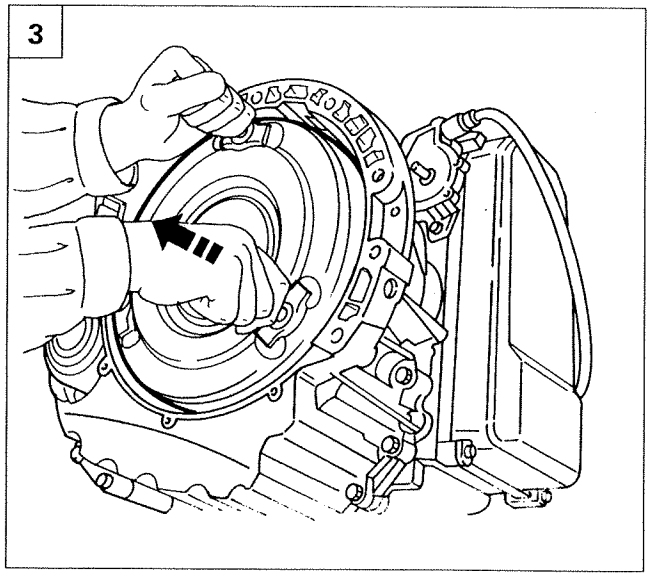

P3U30GB03

TORQUE CONVERTER OIL SEAL FOR GEARBOX INPUT SHAFT

Removing

After having separated the gearbox from the engine, proceed with the removal of the torque converter and the oil seal for the gearbox input shaft, carrying out the following operations:

1. undo the bolt and remove the torque converter retaining tool;
2. tighten the two long bolts in the openings fastening the torque converter;
3. acting on the long bolts, remove the torque converter from the automatic transmission casing;

NOTE *Take care not to spill the oil contained in the torque converter by sealing the oil inlet port using a suitable plug to prevent foreign bodies from entering.*

4. remove the oil seal for the gearbox input shaft.

4

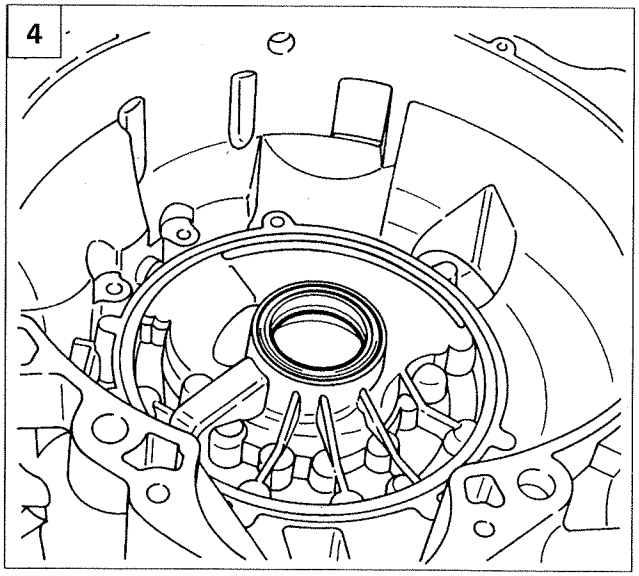

P3U30GB04

1

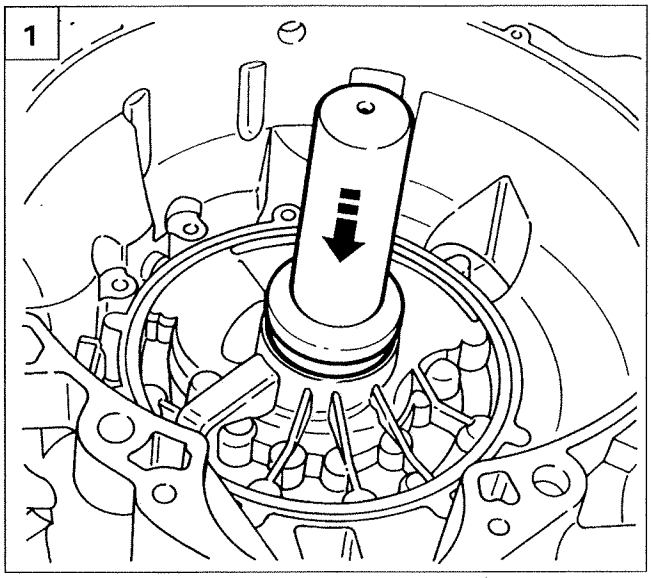

P3U31GB01

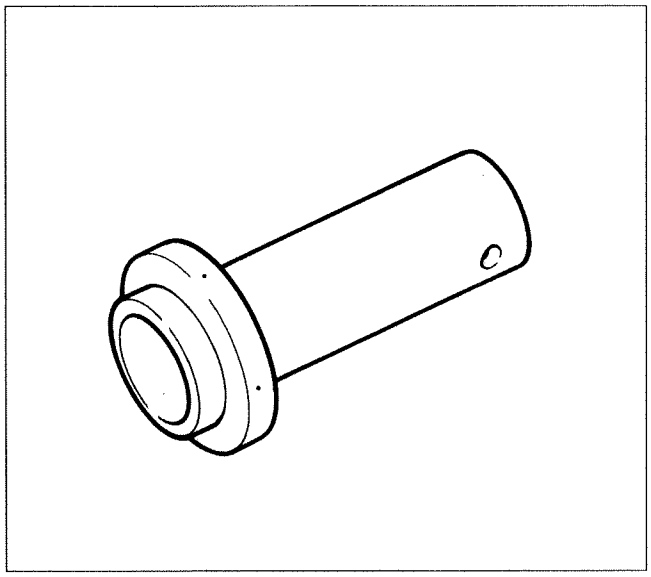

P3U31GB02

Refitting

Carry out the following operations:

1. fit a new oil seal using tool 1870740000;
2. fit the torque converter, making sure that it is completely engaged;
3. fit the retaining tool to prevent the torque converter from slipping.

2

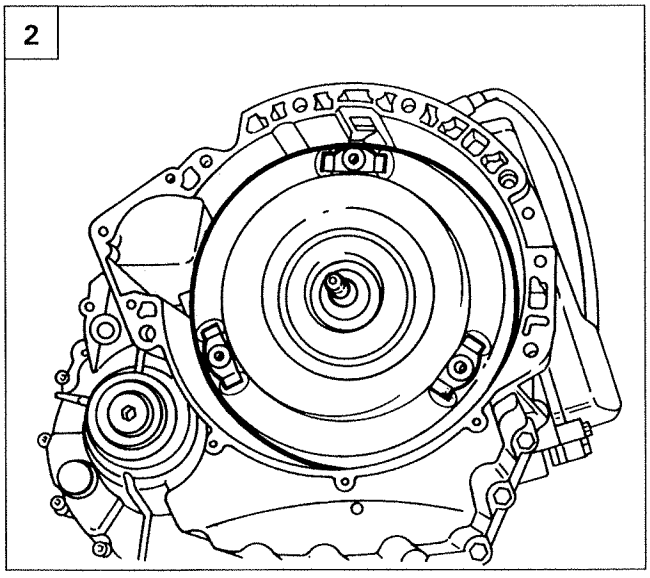

P3U31GB03

3

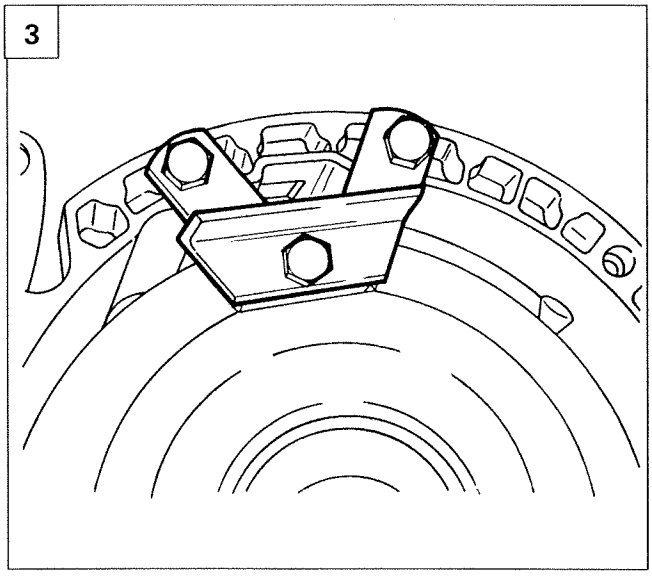

P3U30GB01

21-27.

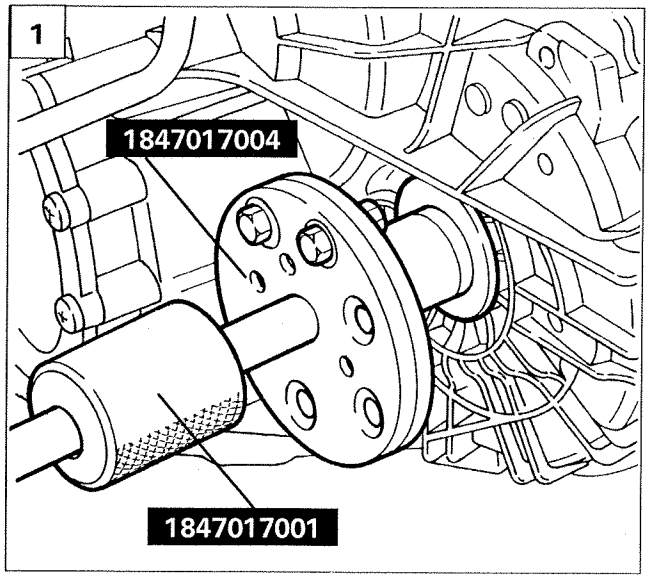

P3U37GB01

LEFT DIFFERENTIAL OIL SEAL

Removing-refitting

Carry out the following operations:

1. Using flange 1847017004 and tool 1847017001, extract the differential internal driveshaft;
2. Remove the oil seal;
3. Fit a new oil seal using tools 1870741000 and 1870740000;
4. Fit the driveshaft attachment flange, making sure that the retaining ring is in the housing.

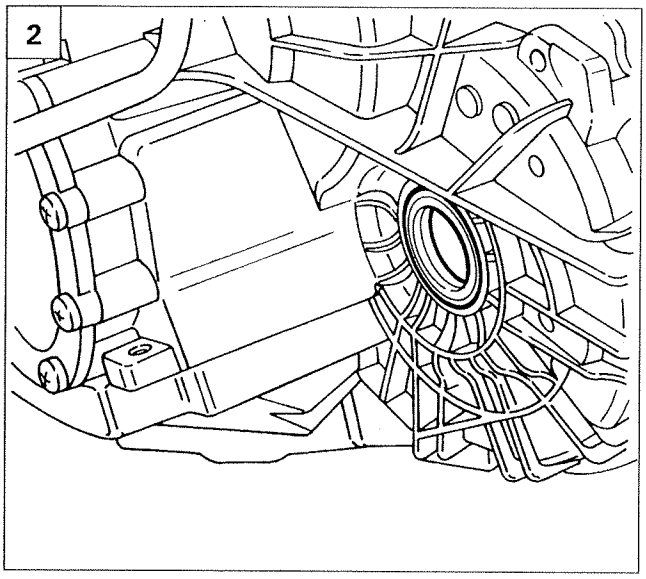

P3U37GB02

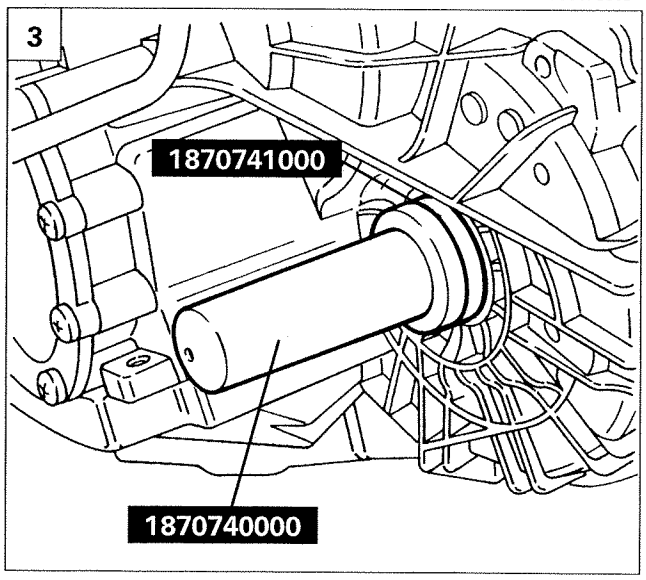

P3U37GB03

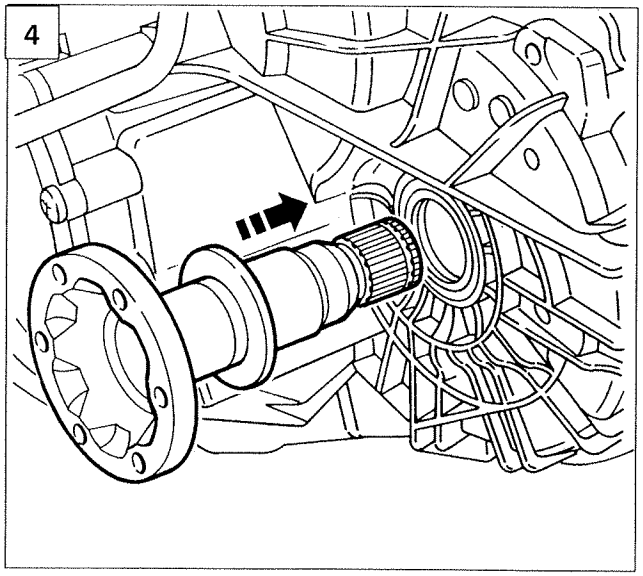

P3U37GB04

RIGHT DIFFERENTIAL OIL SEAL

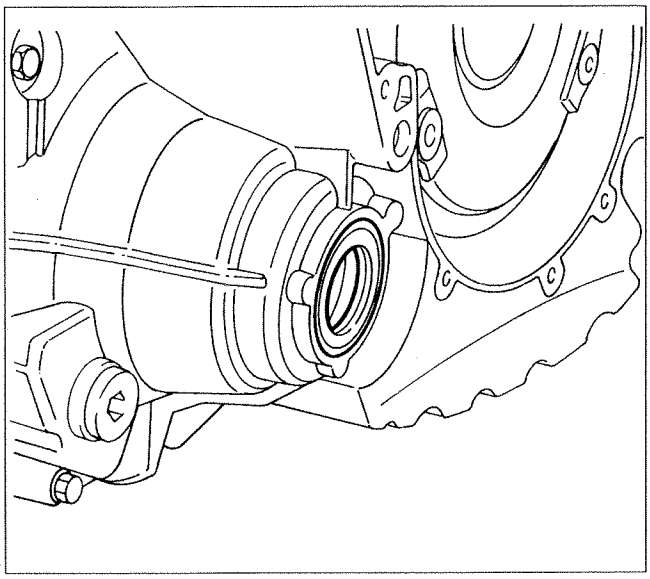

P3U38GB01

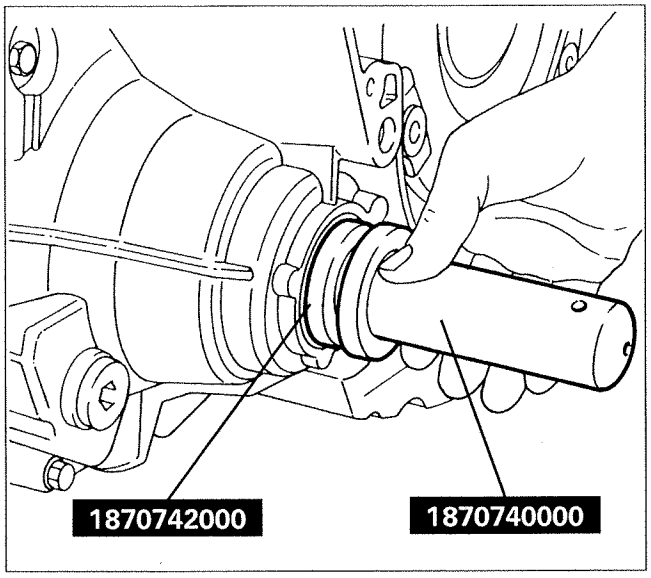

P3U38GB02

Removing-refitting
Remove the oil seal.

Fit a new oil seal using tools 1870742000 and 1870740000.

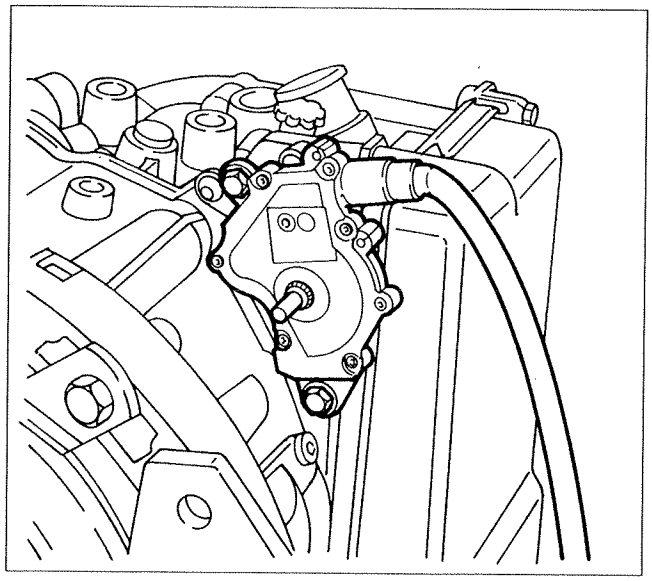

P3U33GB01

GEAR SELECTOR

Removing

Undo the two fixing bolts and remove the gear selector and wiring.

Refitting

NOTE *The gear selector has a timing peg which, when fitting, should enter the housing in the mounting bracket.*

Fit the gear selector and wiring on the automatic transmission, then tighten the fixing bolts to the recommended torque.

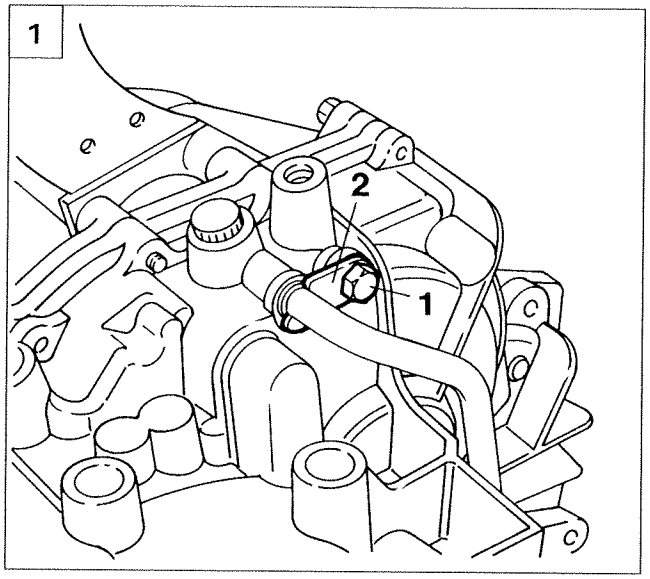

P3U33GB02

OIL RECIRCULATION PIPE

Removing-refitting

Carry out the following operations:

1. undo the bolt (1) and remove the bracket (2);
2. undo the connector, complete with gasket, and remove the oil recirculation pipe;
3. remove the O-Ring.

NOTE *Refit the oil recirculation pipe reversing the order of the operations carried out for the removal.*

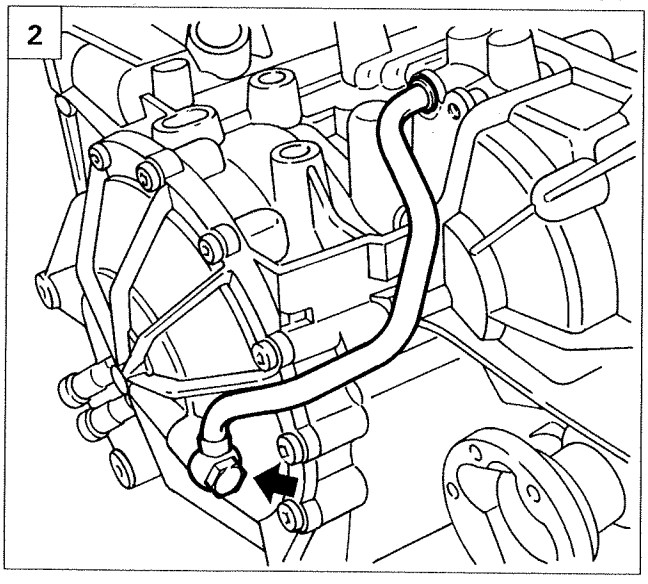

P3U33GB03

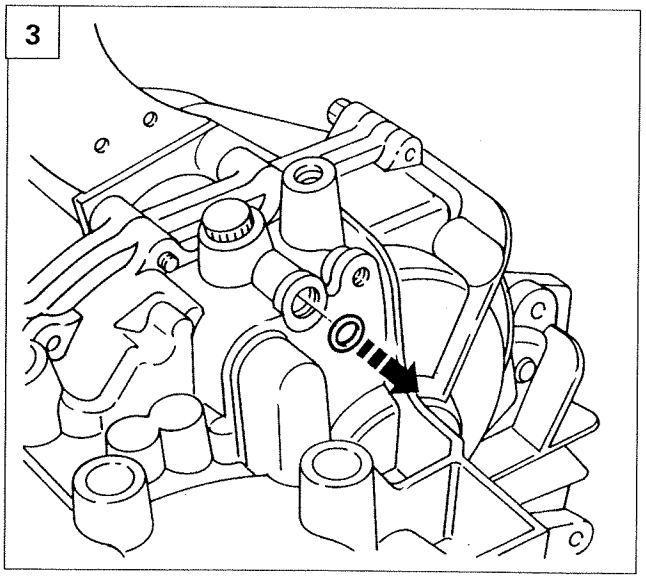

P3U33GB04

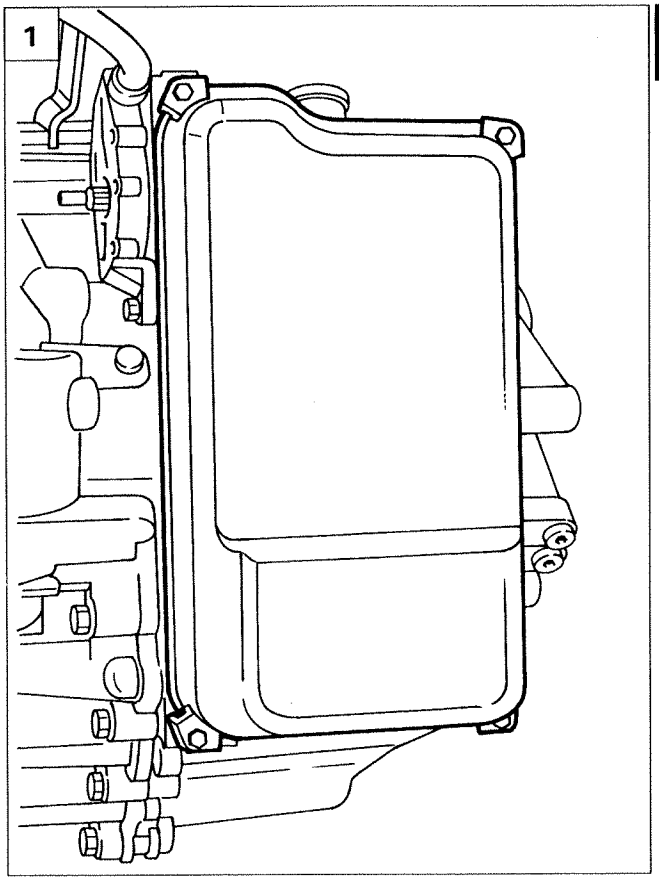

P3U34GB01

GEAR SELECTOR SOLENOID VALVES

Removing

Carry out the following operations:
1. undo the four fixing bolts and remove the solenoid valve cover complete with gasket;
2. remove the electrical connector retaining spring;
3. undo the bolt shown and remove the automatic transmission input rpm sensor from its housing;

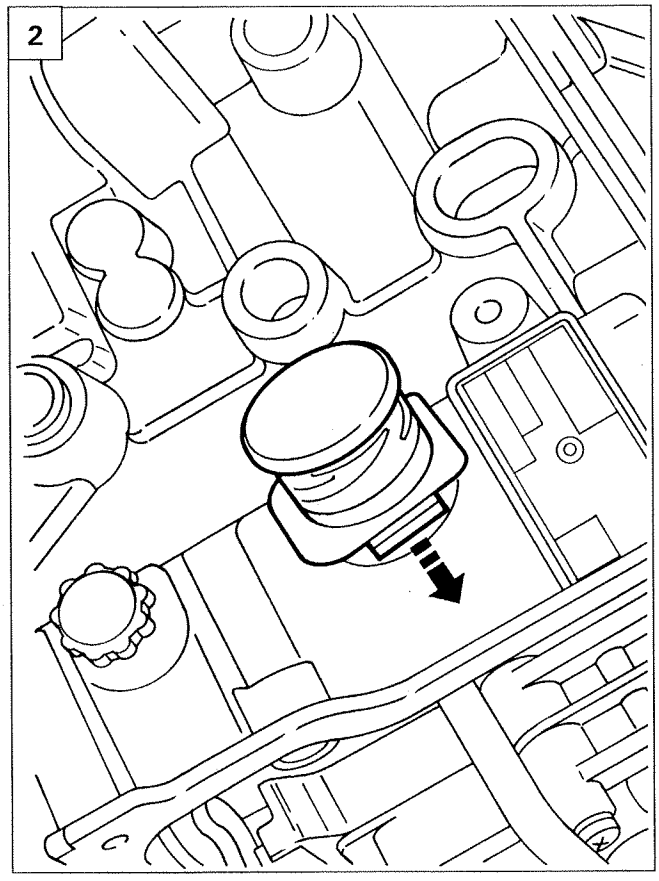

PU34GB02

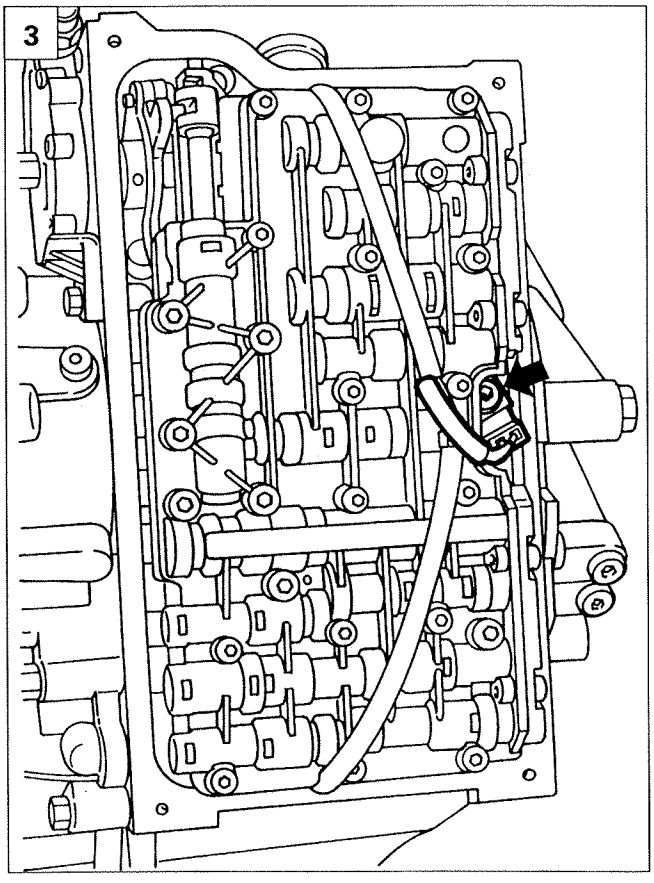

PU34GB03

21-27.

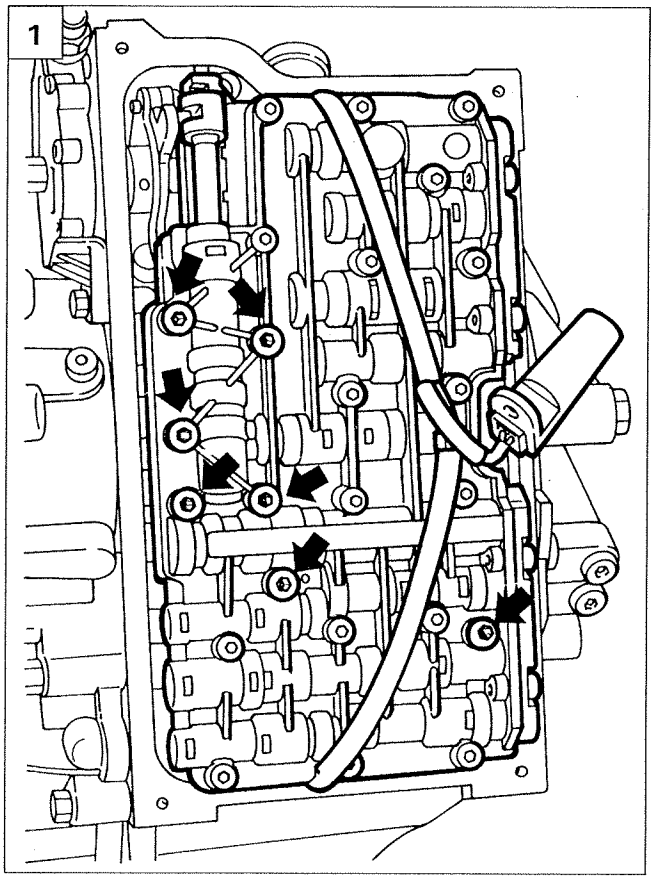

P3U35GB01

1. undo the remaining fixing bolts and move the gear selector solenoid valves, as necessary;
2. undo the bolt shown and extract the automatic transmission output rpm sensor from its housing;
3. remove the gear selector solenoid valves, complete with electrical wiring and automatic transmission input and output rpm sensors.

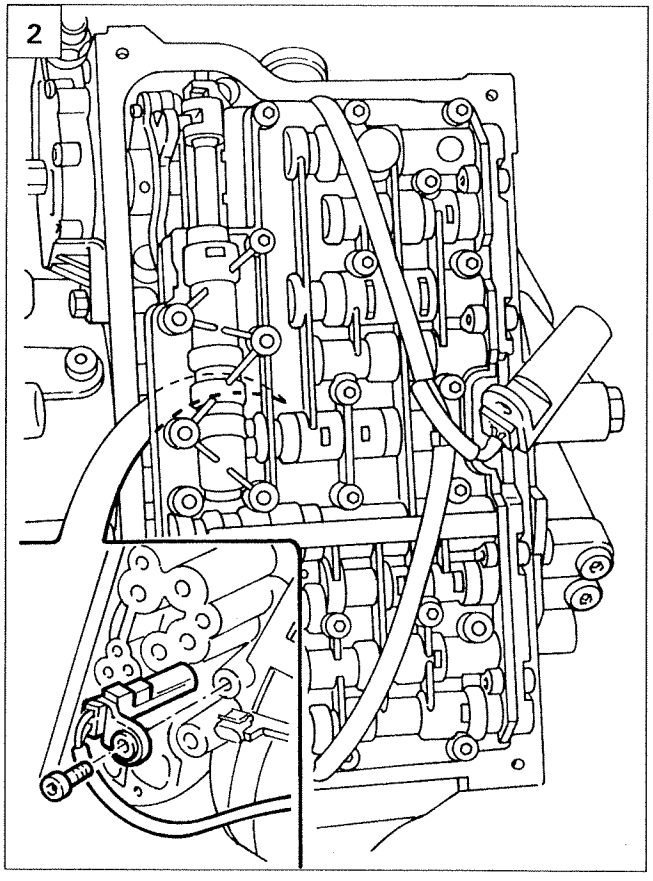

P3U35GB02

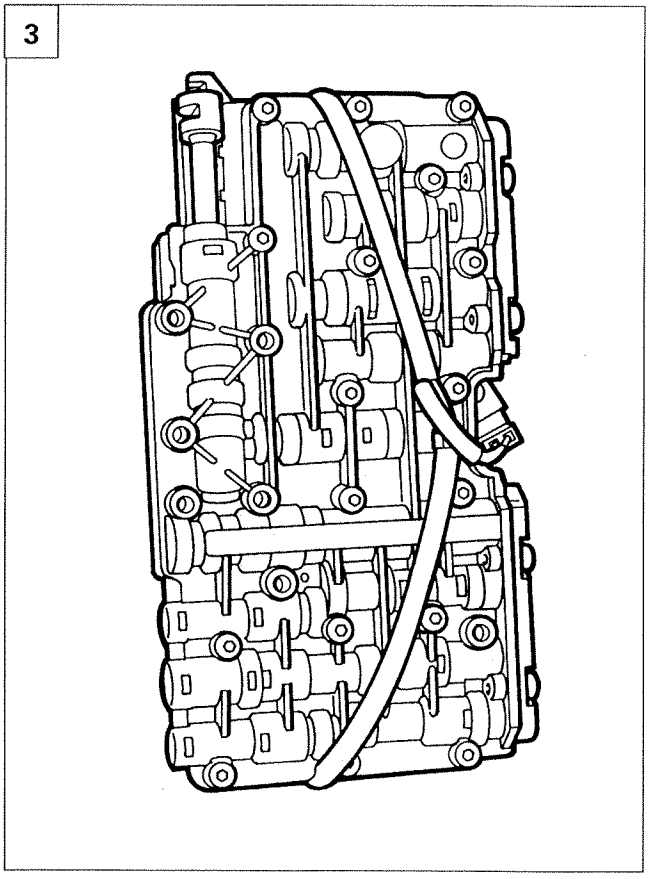

P3U35GB03

1

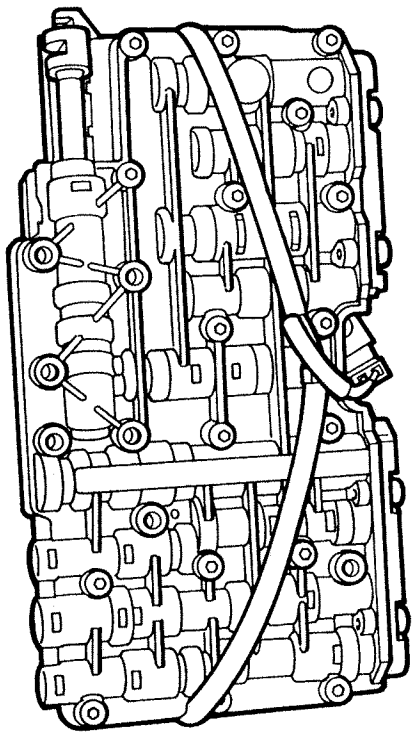

P3U35GB03

2

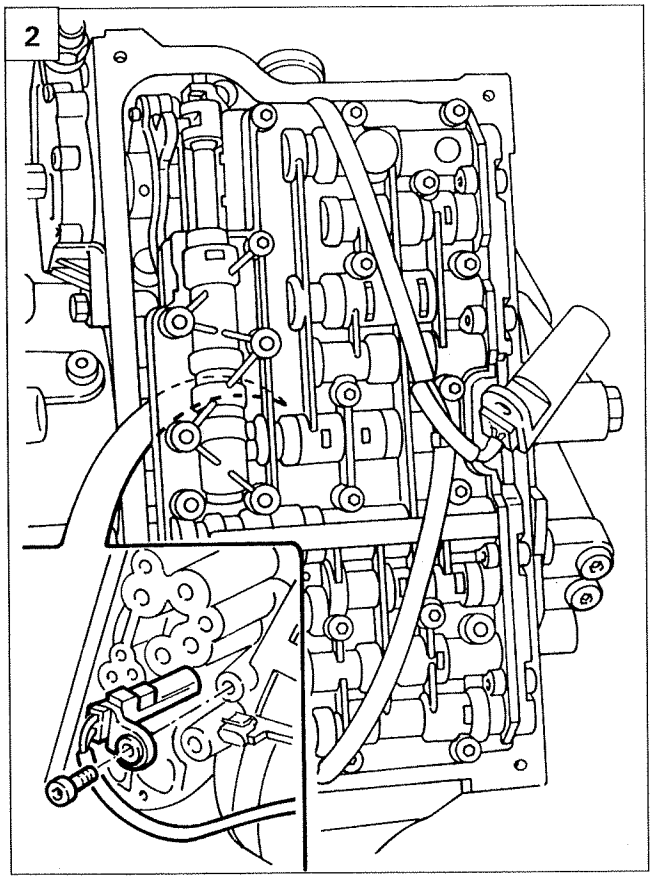

P3U35GB02

Refitting

Carry out the following operations:

1. move the gear selector solenoid valves, complete with electrical wiring and automatic transmission input and output rpm sensors, closer to the housing;
2. fit the automatic transmission output rpm sensor in its housing, then tighten the fixing bolt to the recommended torque.

NOTE *Fit the electric manifold in its housing, then complete the refitting of the gear selector solenoid valves, reversing the order of the operations carried out for the removal.*

Copyright Fiat Auto

21-27.

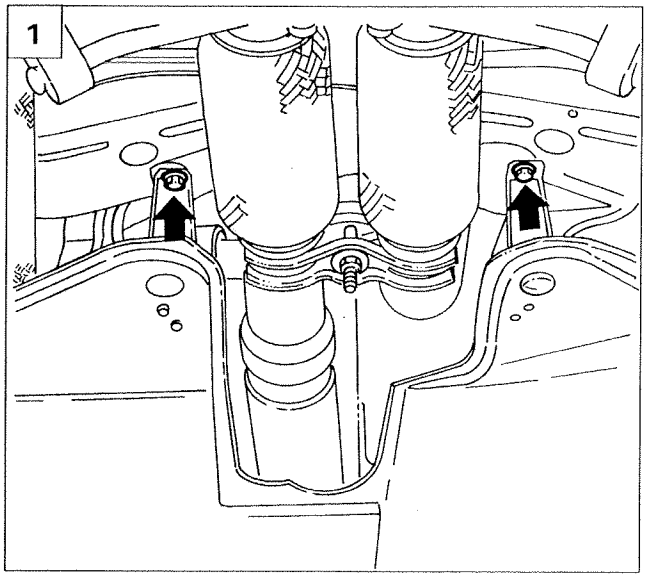

P3U38GB03

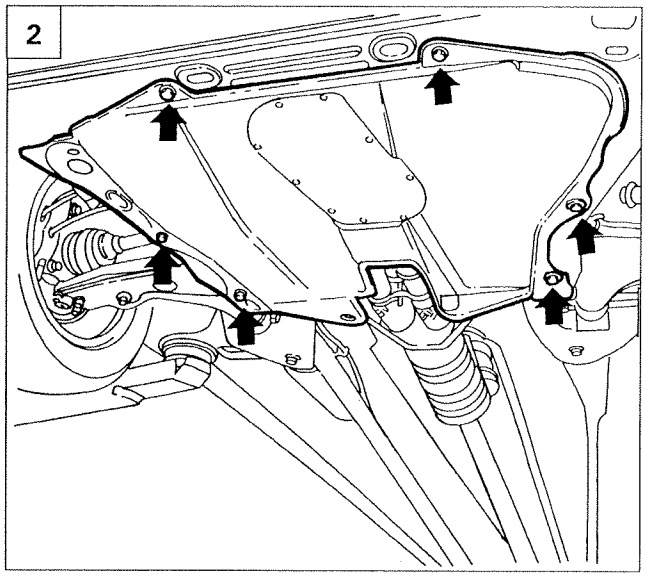

P3U38GB04

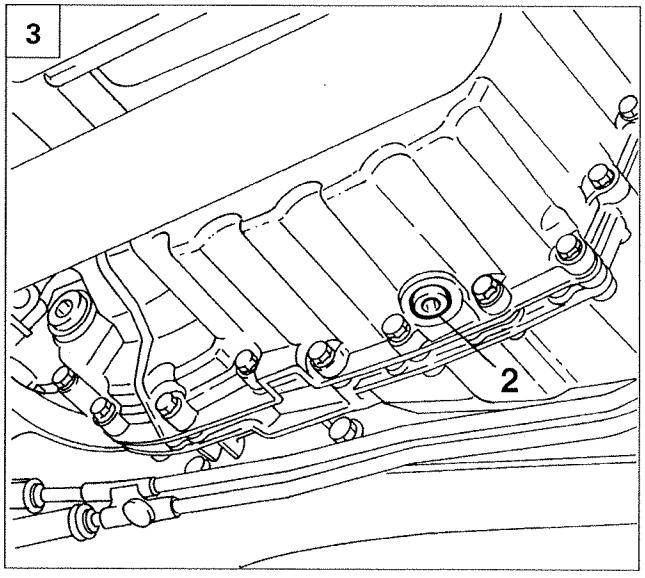

P3U38GB05

DRAINING OIL

NOTE *Before carrying out several of the following operations, the oil must be drained from the automatic transmission. The oil which is drained should be collected in a suitable container and reused for refilling at the end of the operation.*

Position the vehicle on a lift, then carry out the following operations:

1. undo the two rear bolts fixing the protection under the engine;
2. undo the fix bolts fixing the protection under the engine;
3. position a suitable container for recovering the automatic transmission fluid, then undo the sealing plug (2) and let all the fluid drain out; then fit the drain plug and tighten it to the recommended torque.

NOTE *The operations of refilling and checking the transmission fluid level should be carried out via the plug (1) on the differential as described on page 58.*

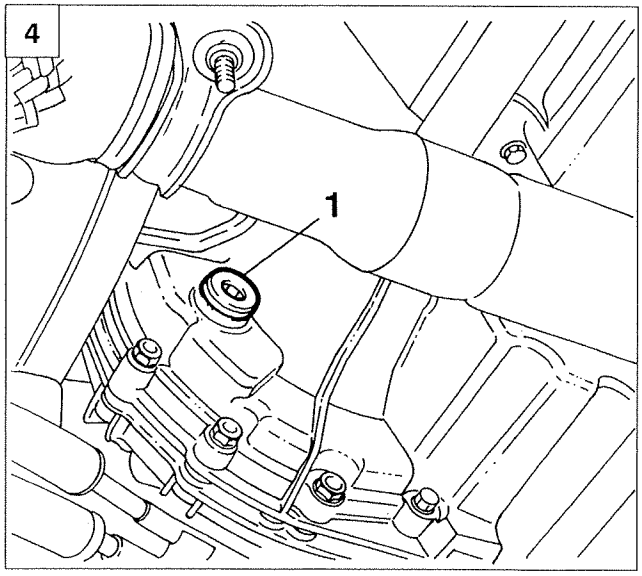

P3U38GB06

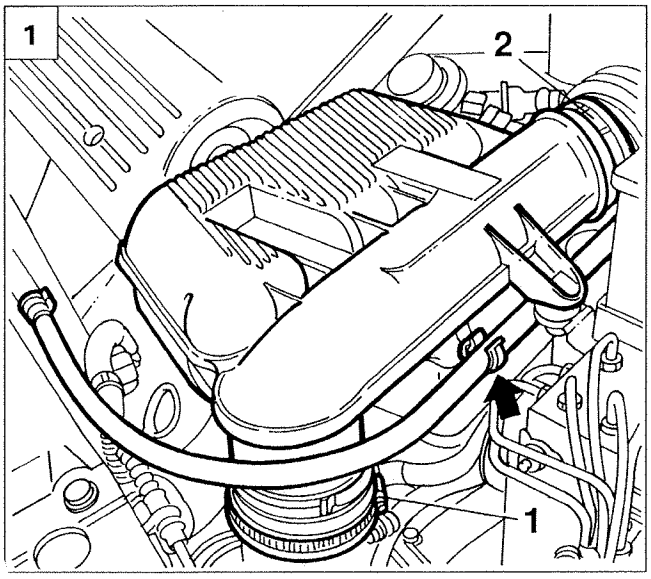

P3U39GB01

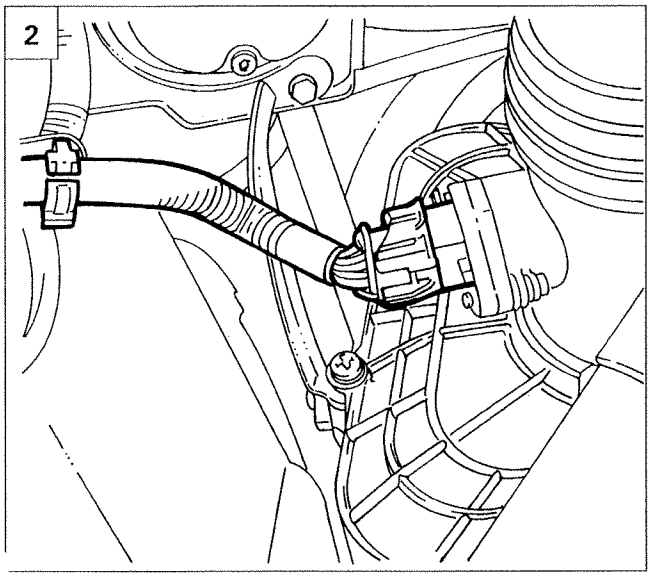

P3U39GB02

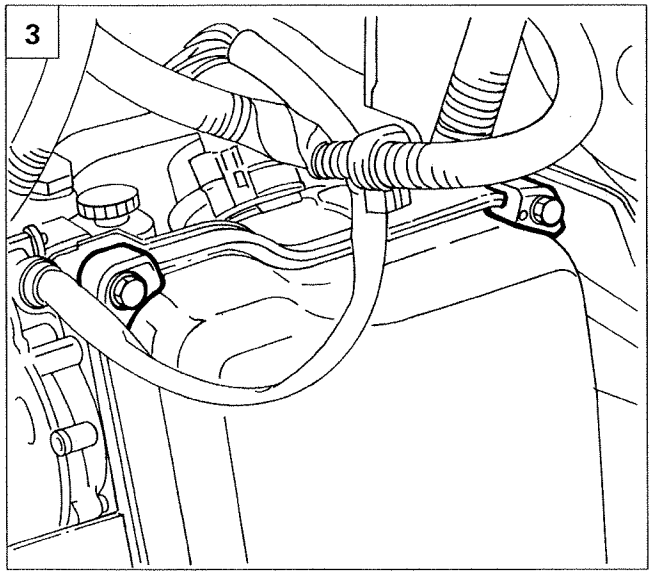

P3U39GB03

GEAR SELECTOR SOLENOID VALVES COVER

Removing-refitting

Carry out the following operations:
1. release the two bands illustrated fastening the resonator to the air filter casing (1) and to the inlet hose (2), move the expansion tank pipe, releasing it from the clip (arrow), then remove the resonator;
2. disconnect the connector for the intake air temperature sensor, undo the two bolts shown and remove the bracket connecting the air filter casing to the A.B.S. control unit mounting, then remove the air filter casing;
3. undo the two upper bolts fixing the cover;
4. undo the two lower fixing bolts and remove the gear selector solenoild valve cover.

When refitting, reverse the order of the operations carried out for the removal.

GEAR SELECTOR SOLENOID VALVES

Removing-refitting

Remove the gear selector solenoid valves, following the procedure described on page 35.
When refitting, reverse the order of the operations carried out for the removal.

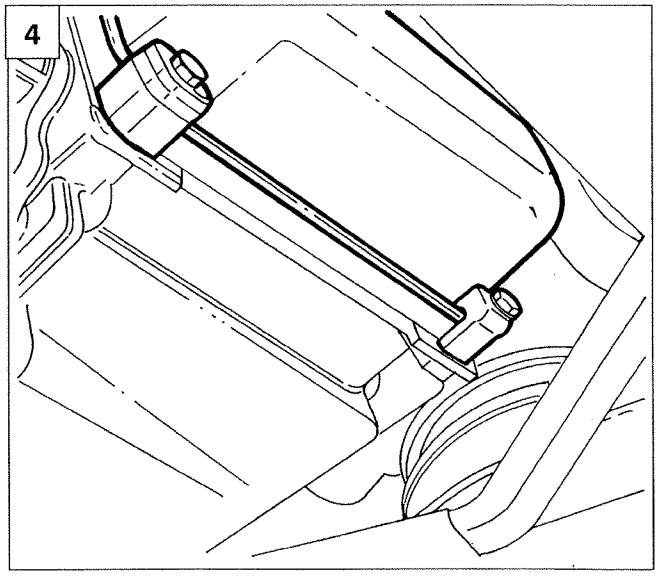

P3U39GB04

21-27.

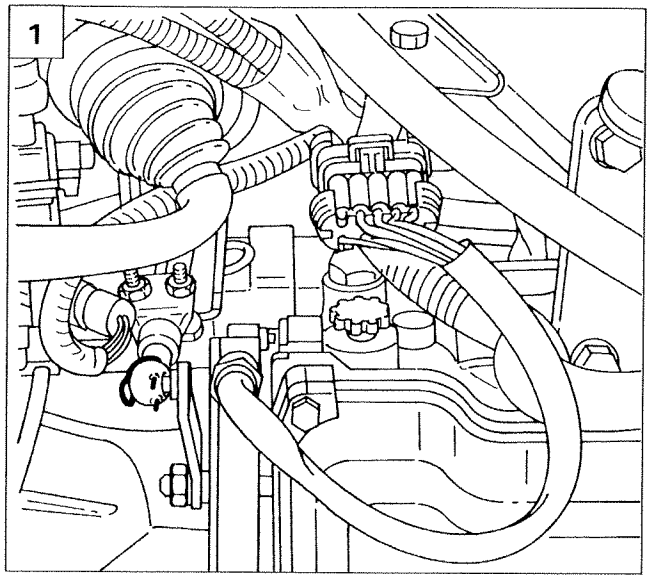

P3U40GB03

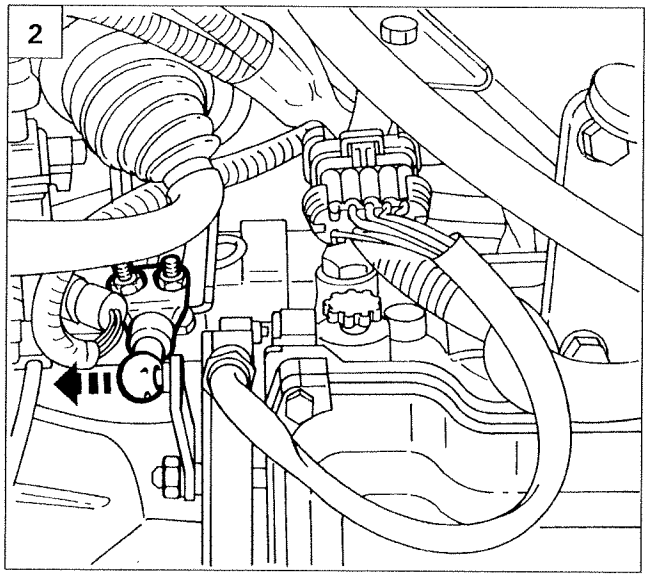

P3U40GB04

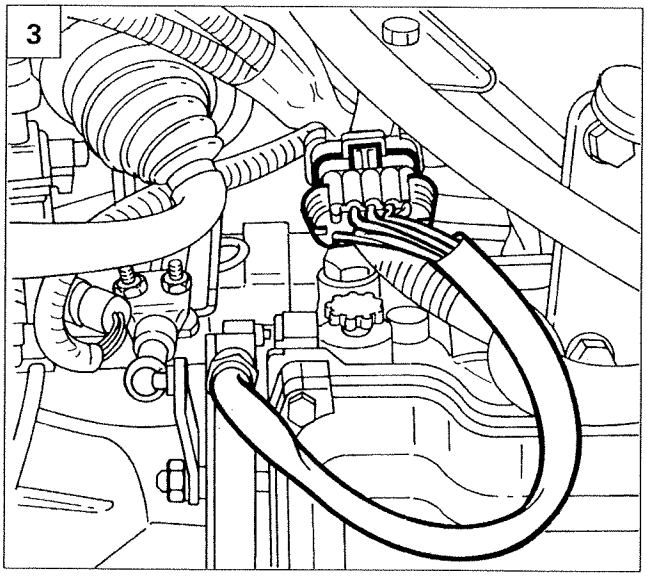

P3U40GB05

GEAR SELECTOR

Removing-refitting

Remove the resonator and the air filter casing as described previously, then carry out the following operations:

1. straighten the ends of the clip, then remove it from the end of the gear engagement cable;
2. disconnect the gear engagement cable from the gear selector lever on the automatic transmission;
3. disconnect the gear selector connector;
4. undo the two fixing bolts and remove the gear selector on the automatic transmission.

When refitting, reverse the order of the operations carried out for the removal.

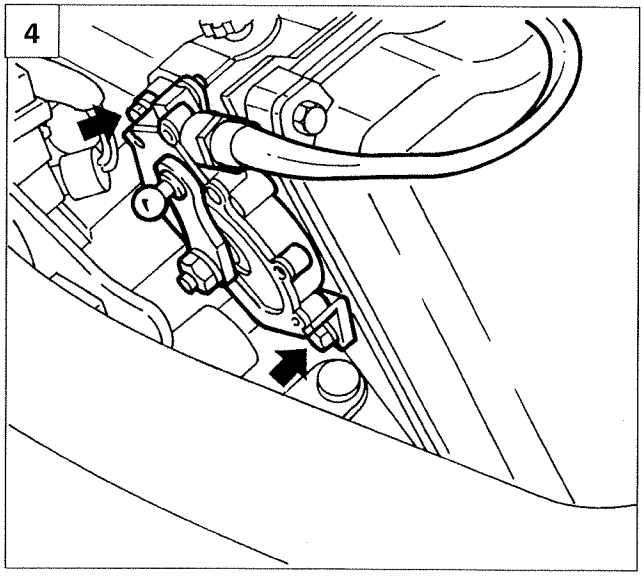

P3U40GB06

2

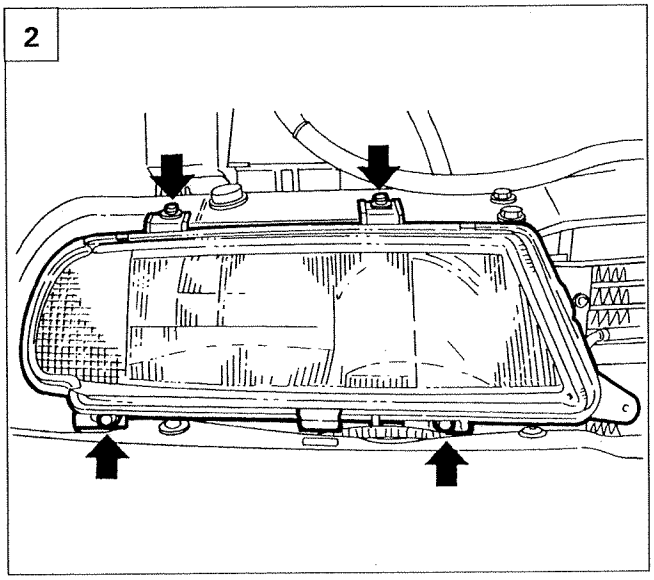

P3U41GB02

1

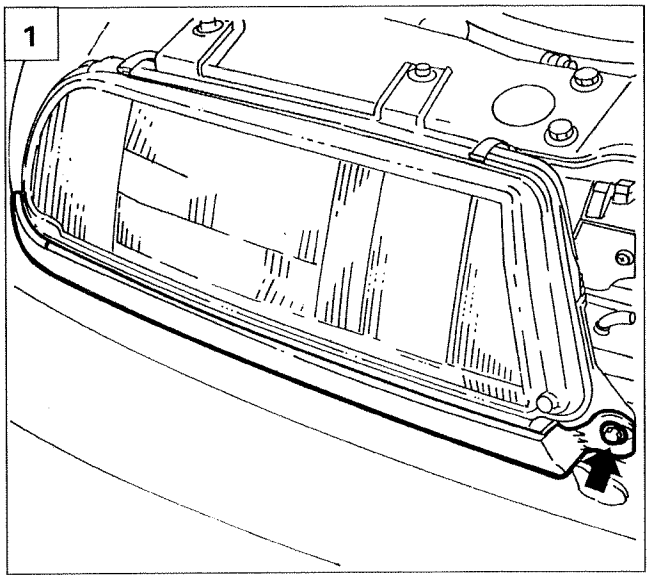

P3U41GB01

3

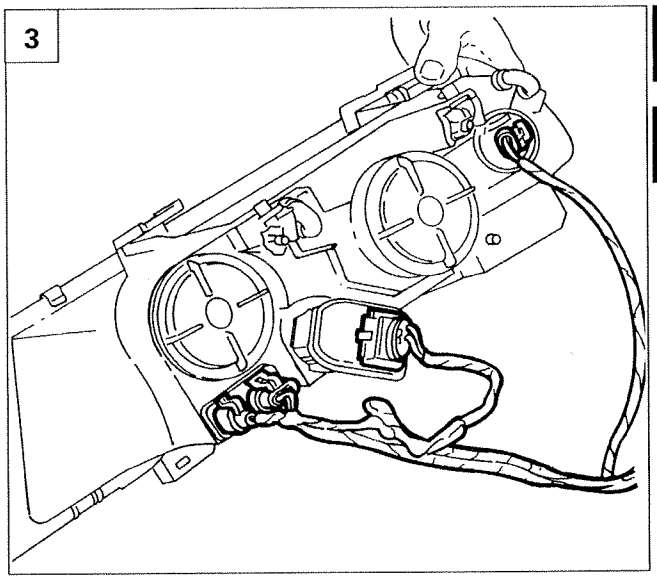

P3U41GB03

AUTOMATIC TRANSMISSION FLUID RADIATOR

Removing-refitting

Carry out the following operations:

1. undo the bolt shown and remove the trim under the headlamp;
2. undo the four fixing bolts and remove the light cluster from its housing;
3. disconnect the four connectors and remove the complete light cluster;
4. undo the two fixing bolts and remove the fog light surround;
5. remove the fog light and disconnect the connector;

4

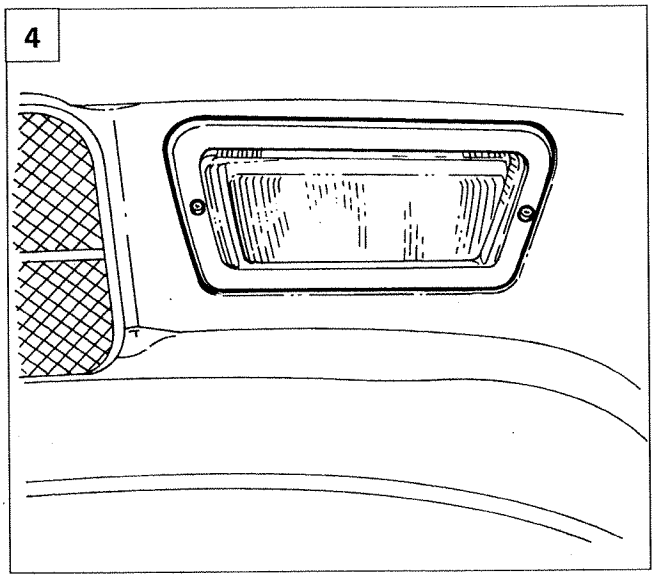

P3U41GB04

5

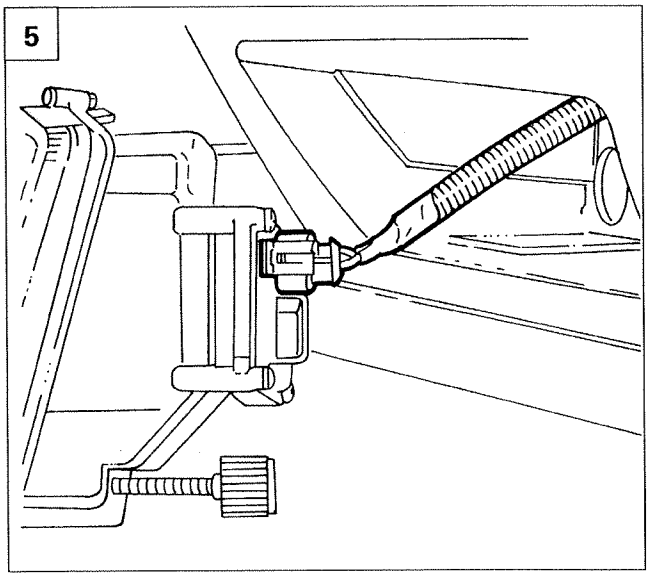

P3U41GB05

Copyright Fiat Auto

21-27.

1

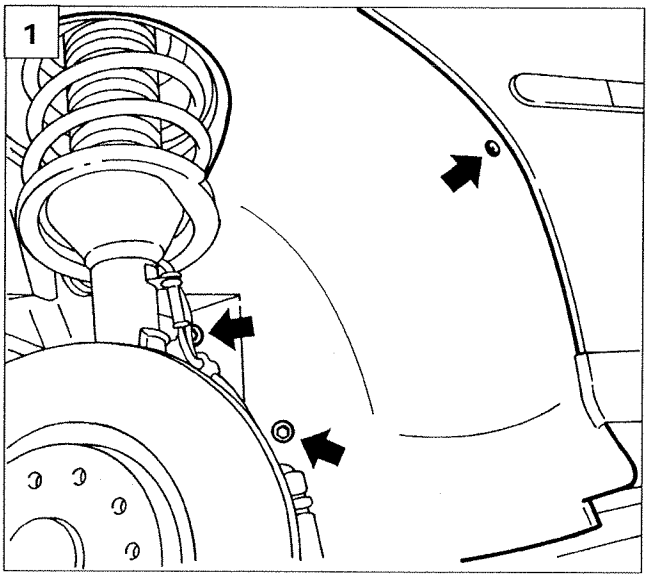

P3U42GB01

2

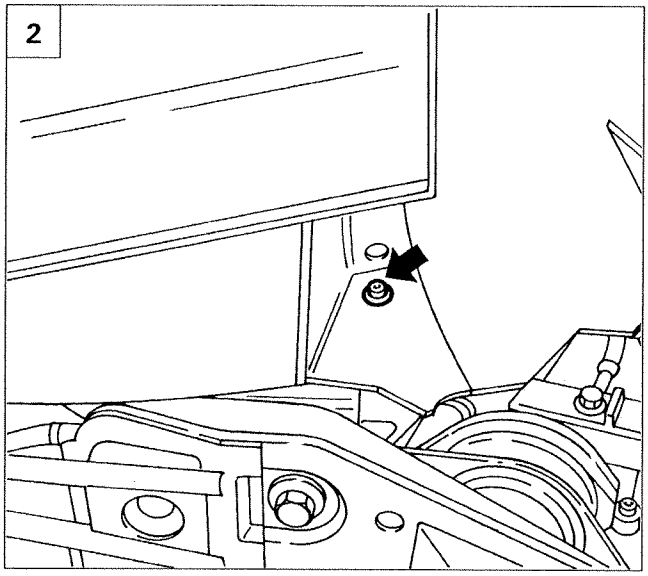

P3U42GB02

3

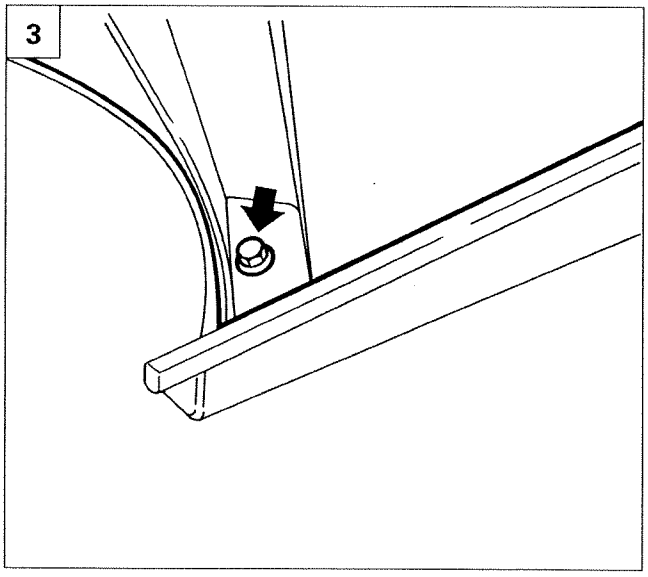

P3U42GB03

4

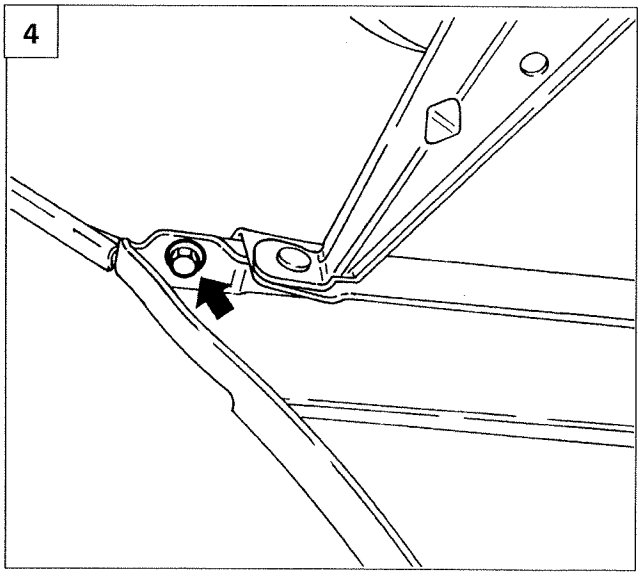

P3U42GB04

1. undo the three fixing bolts and remove the wheel arch rear liner;
2. undo the bolt fixing the wheel arch front liner to the bodyshell;
3. undo the bolt fixing it to the bumper and remove the wheel arch front liner;
4. undo the side bolts fixing the bumper to the bodyshell;

2

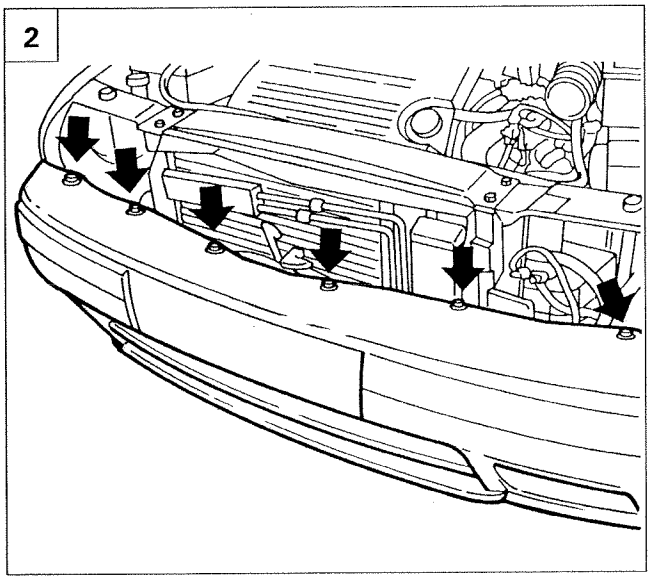

P3U43GB02

1

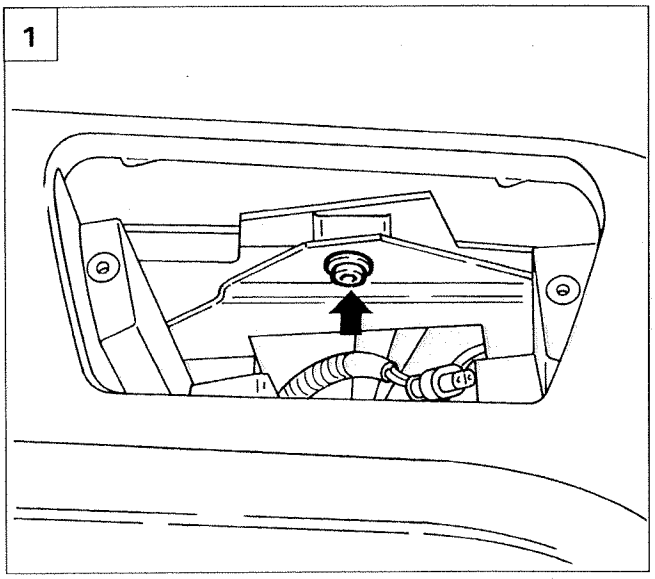

P3U43GB01

3

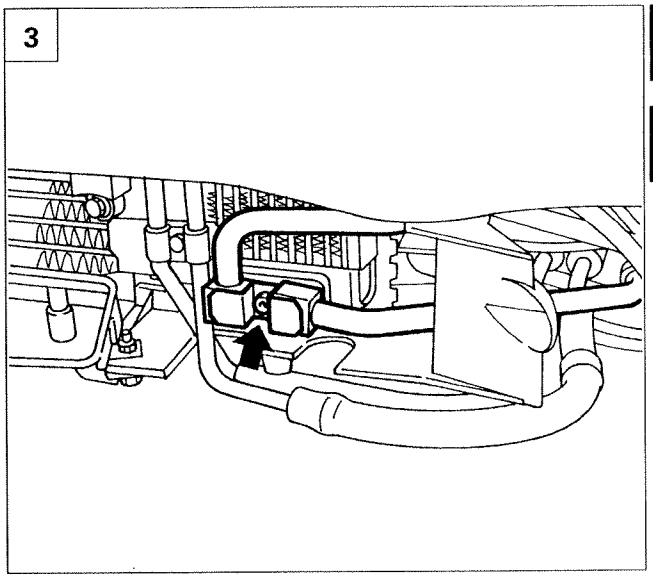

P3U43GB03

4

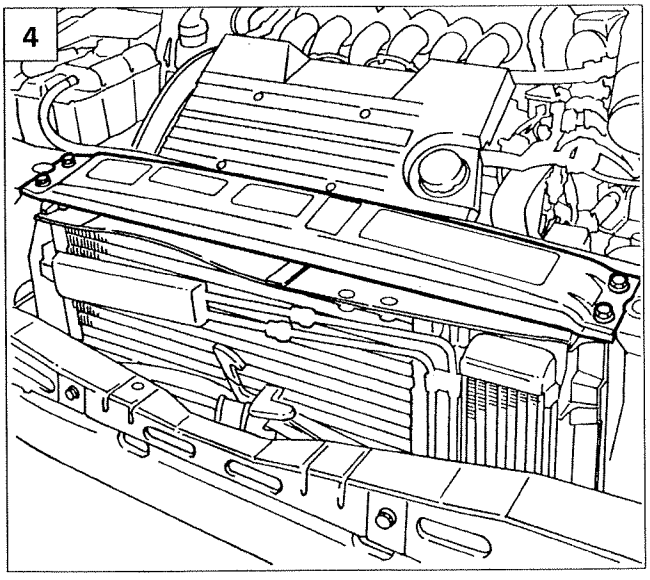

P3U43GB04

1. undo the lower bolts fixing the bumper to the bodyshell;
2. undo the six upper fixing bolts and remove the bumper;
3. undo the bolt and remove the supply and return pipes from the automatic transmission fluid radiator;
4. undo the four bolts and remove the upper crossmember;

Copyright Fiat Auto

21-27.

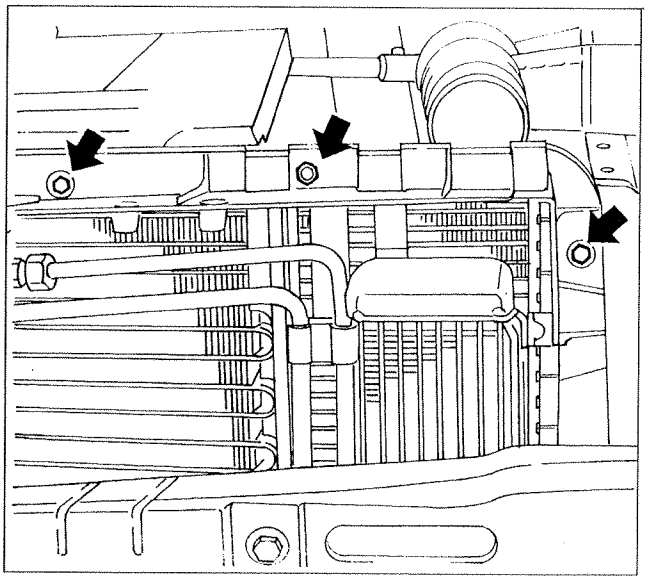

P3U44GB01

- undo the three upper bolts fixing the left radiator shield;

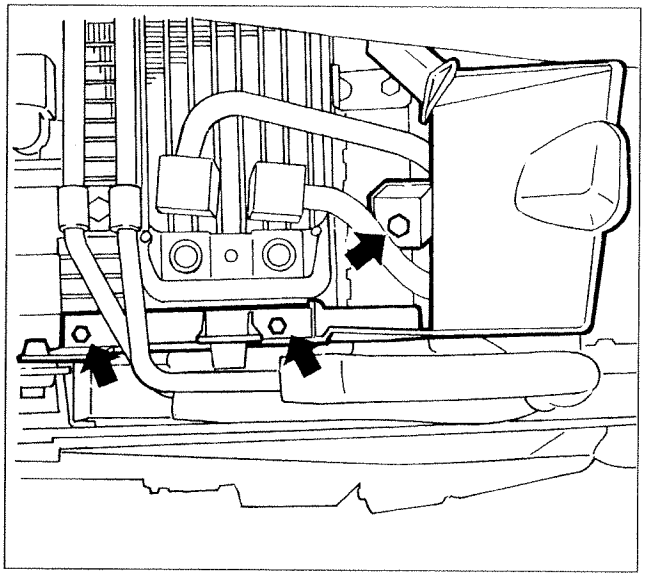

P3U44GB02

- undo the three lower fixing bolts and move the left radiator shield, as necessary;

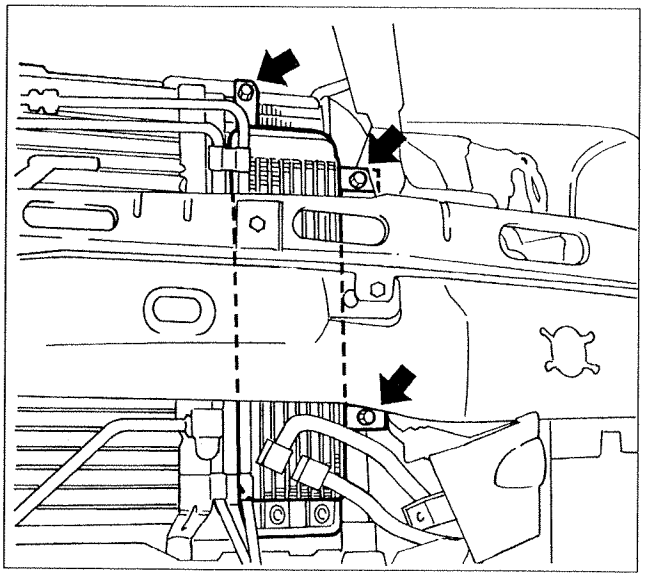

P3U44GB03

- undo the three fixing bolts and remove the automatic transmission fluid radiator, removing it from below.

When refitting, reverse the order of the operations carried out for the removal.

1

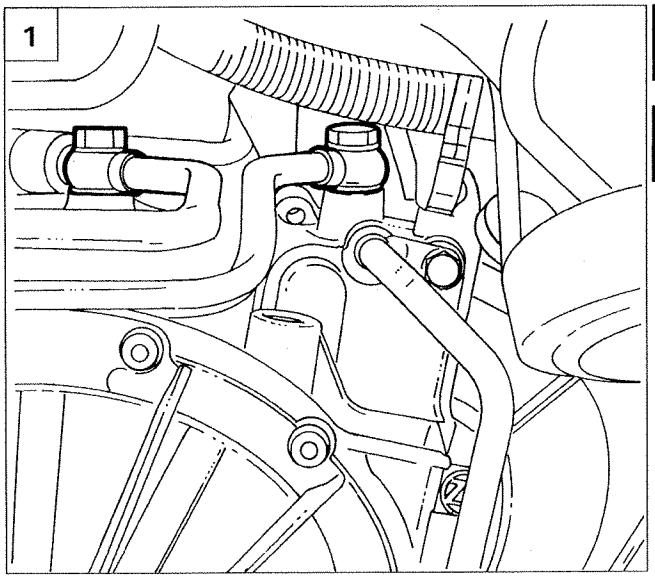

P3U45GB01

2

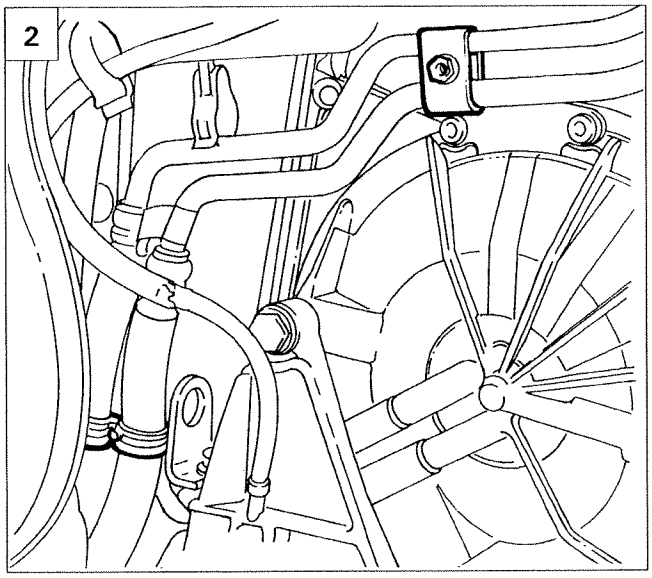

P3U45GB02

3

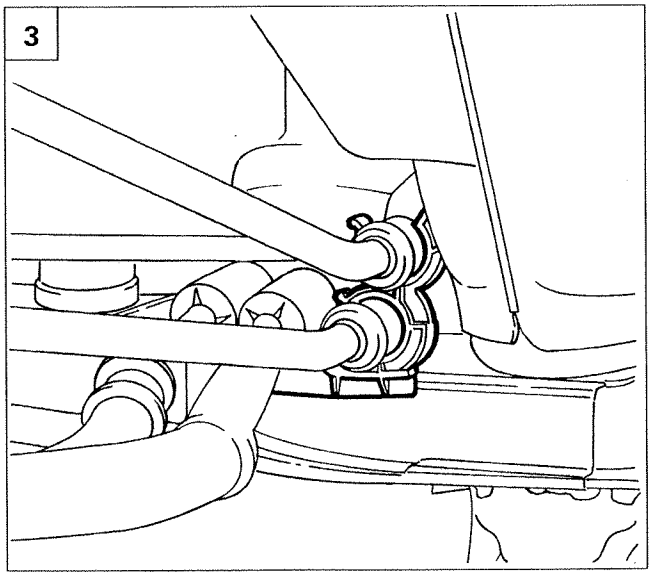

P3U45GB03

FLUID PIPES FROM AUTOMATIC TRANSMISSION TO RADIATOR

Removing-refitting

Remove the bumper and the wheel arch liners as described previuosly, then carry out the following operations:

1. undo the two connectors for the fluid supply and return pipes from the automatic transmission;
2. undo the bolt fixing the fluid pipes mounting bracket and release the rear plastic band;
3. release the front plastic band and release the fluid pipes;
4. undo the bolt and remove the fluid supply and return pipes from the automatic transmission fluid radiator.

When refitting, reverse the order of the operations carried out for the removal.

FLUID RECIRCULATION PIPE

Removing-refitting

Remove the left wheel arch liner as described previously then remove the fluid recirculation pipe following the procedure described on page 34.

When refitting, reverse the order of the operations carried out for the removal.

4

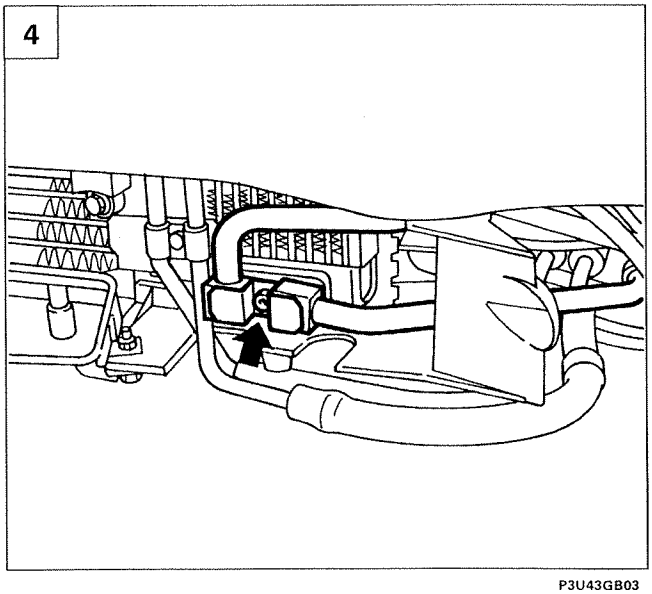

P3U43GB03

Copyright Fiat Auto

21-27.

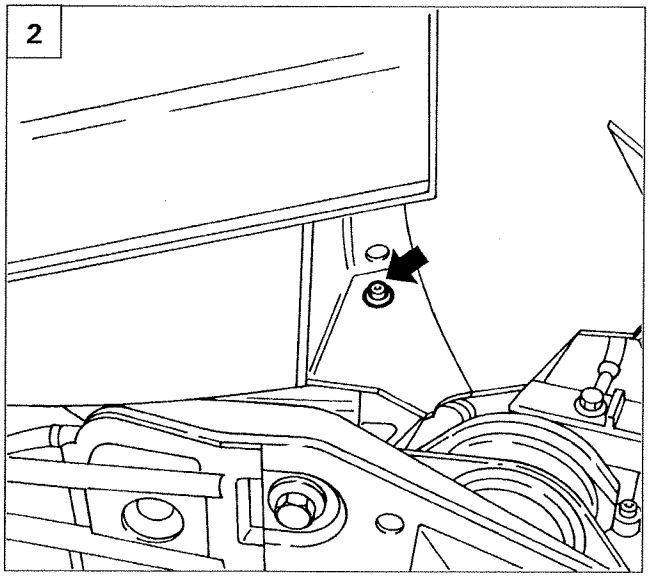

P3U42GB02

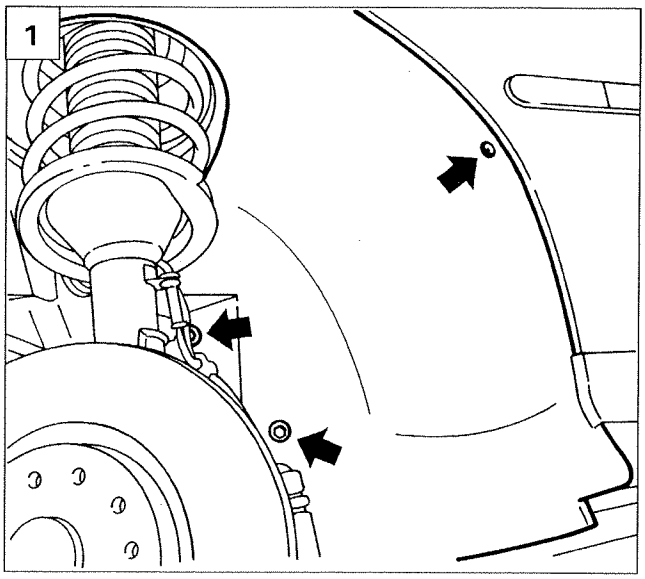

P3U42GB01

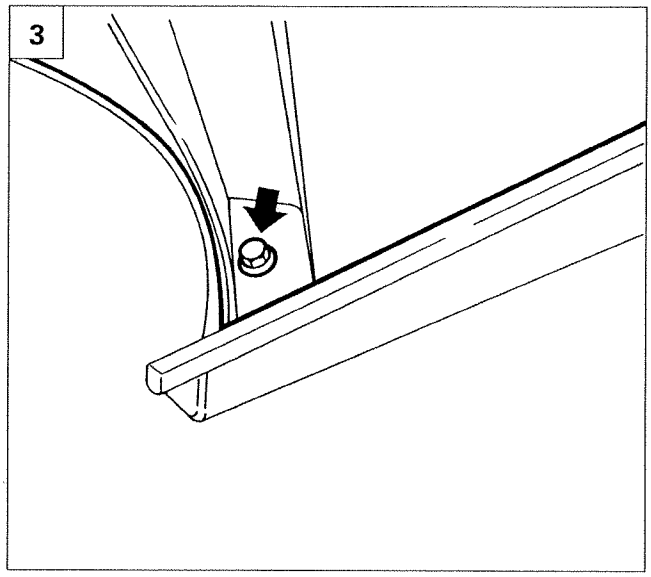

P3U42GB03

DRIVE SHAFTS
Removing-refitting

Carry out the following operations:

1. undo the three fixing bolts and remove the rear wheel arch liner;
2. undo the bolt fixing the front wheel arch liner to the bodyshell;
3. undo the bolt fixing it to the bumper and remove the front wheel arch liner;
4. using a drift, remove the staking from the wheel hub fixing nut;
5. undo the wheel hub fixing nut;

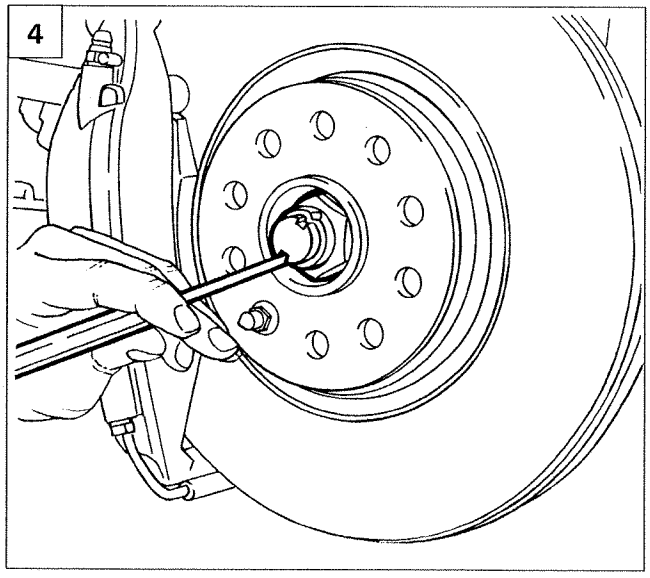

P3U46GB01

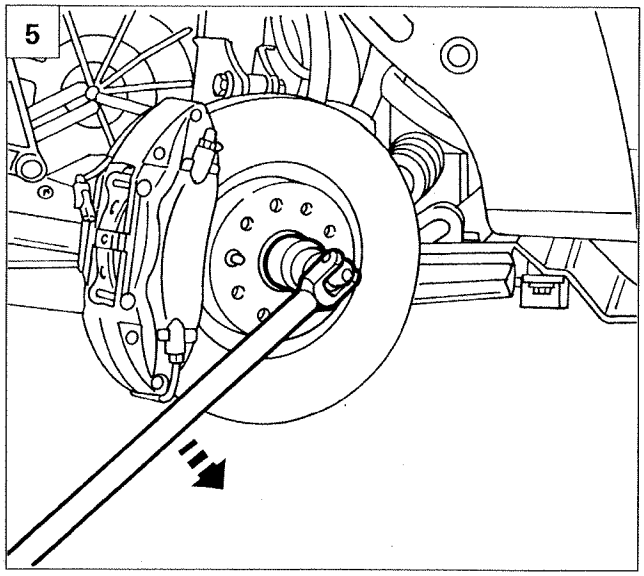

P3U46GB02

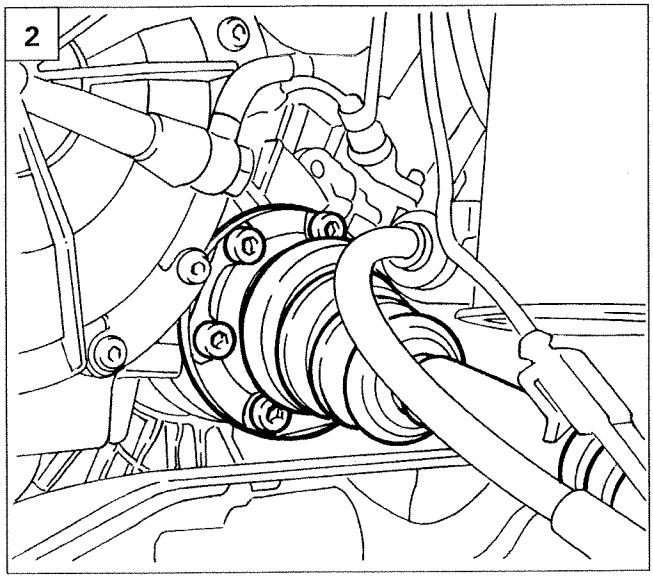

P3U47GB02

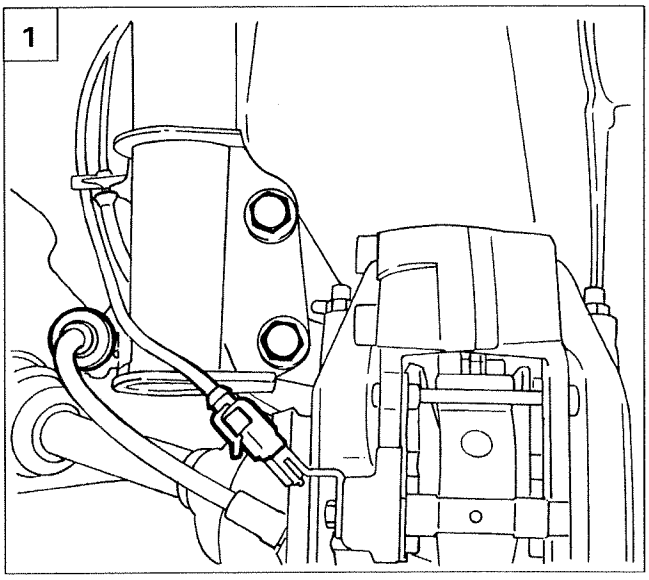

P3U47GB01

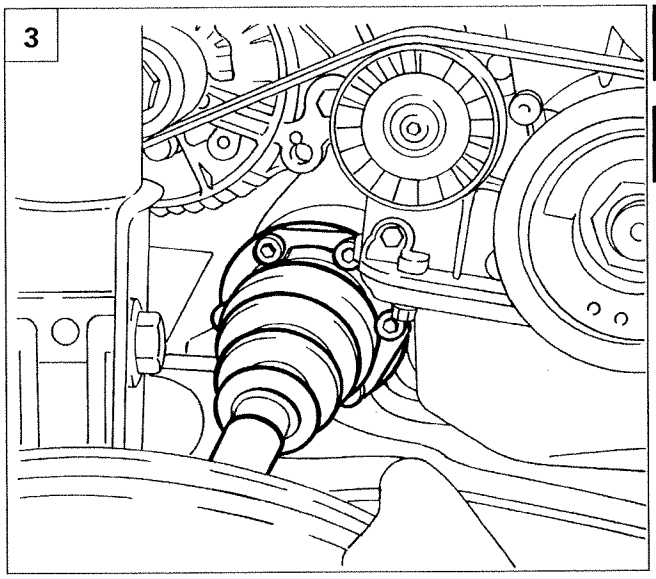

P3U47GB03

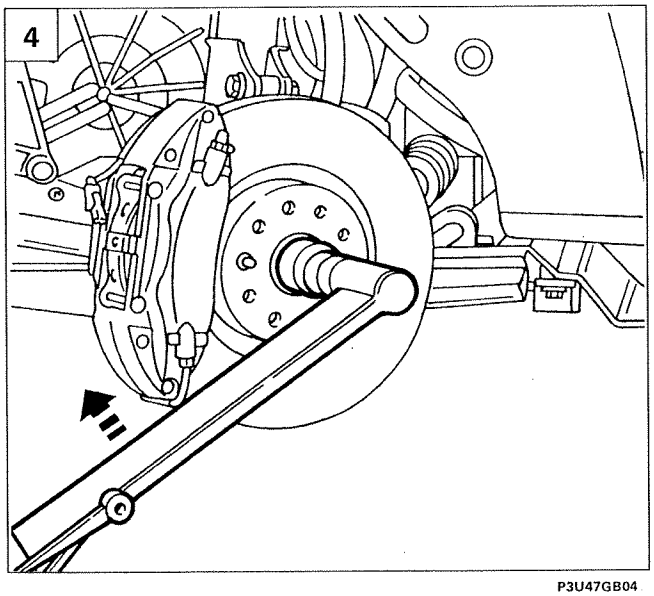

P3U47GB04

1. disconnect the connector for the brake pad wear sensor, remove the brake fluid pipe rubber mounting from its housing, then undo the two bolts fixing the shock absorber to the hub carrier and release the driveshaft, tilting the hub carrier outwards;
2. undo the six bolts fixing the differential flange and remove the left driveshaft;
3. undo the six bolts fixing the intermediate shaft to the flange and remove the right driveshaft.

When refitting, reverse the order of the operations carried out for the removal and, in particular:

4. tighten the nuts fixing the wheel hubs to a torque of 7 daNm + 50° and stake the collar of the nut.

Copyright Fiat Auto

21-27.

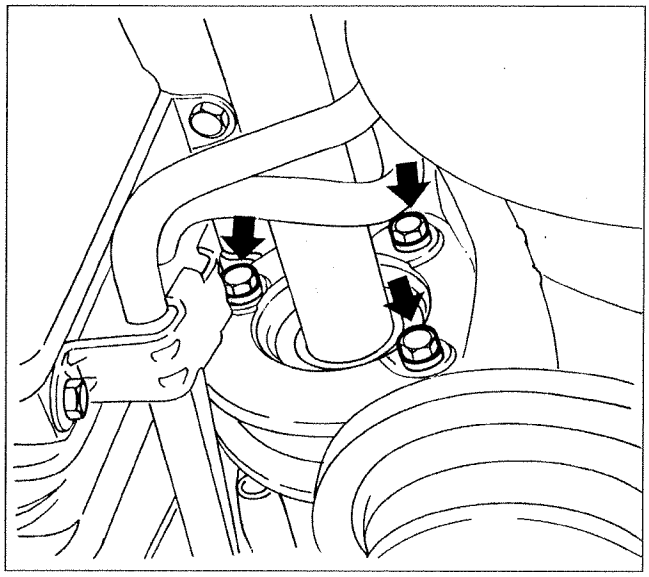

P3U48GB01

RIGHT DIFFERENTIAL OIL SEAL

Removing-refitting

Remove the driveshaft as described previously, then carry out the following operations:

- loosen the three bolts illustrated, rotate the retaniing tabs and remove the intermediate shaft, complete with bearing;

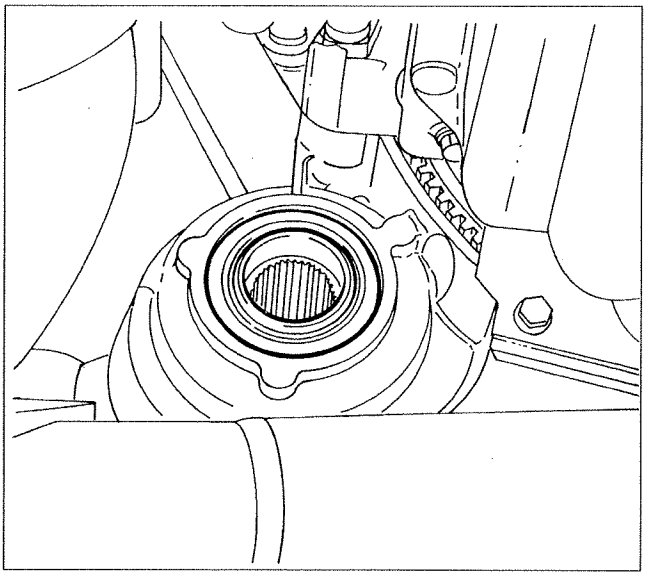

P3U48GB02

- remove the oil seal;

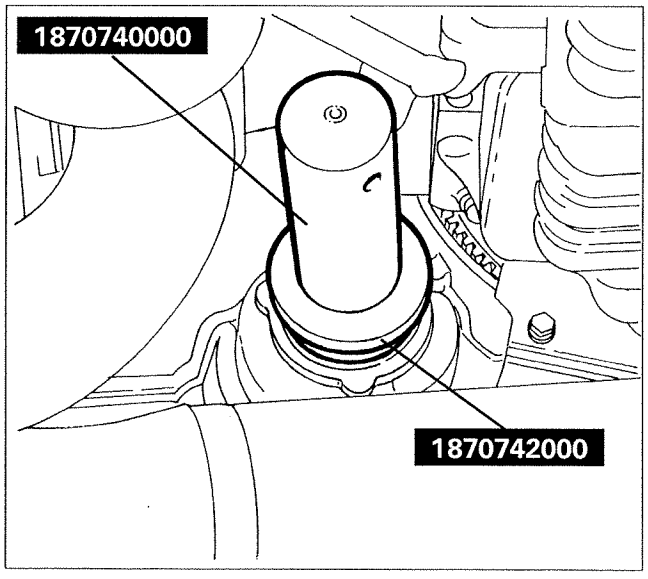

P3U48GB03

- fit a new oil sael using tools 1870742000 and 1870740000.

Refit the intermediate shaft and the driveshaft, reversing the order of the operations described for the removal.

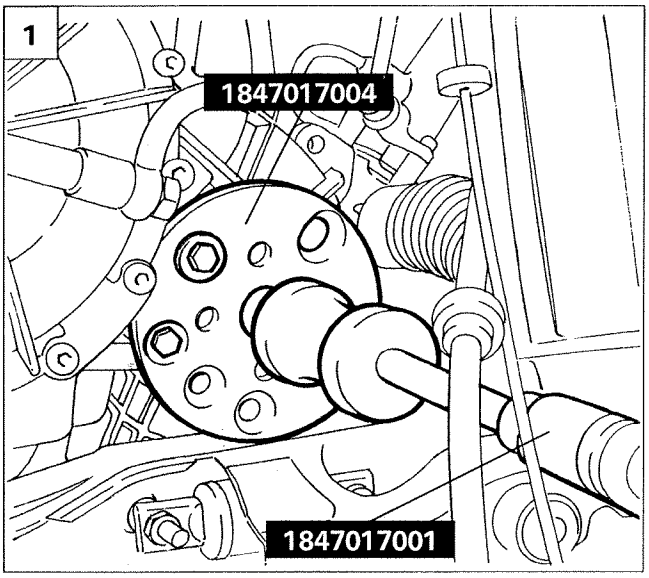

P3U49GB01

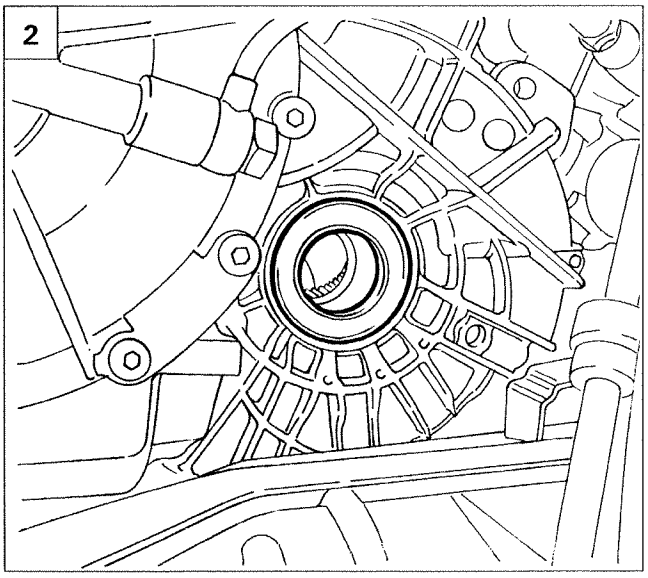

P3U49GB02

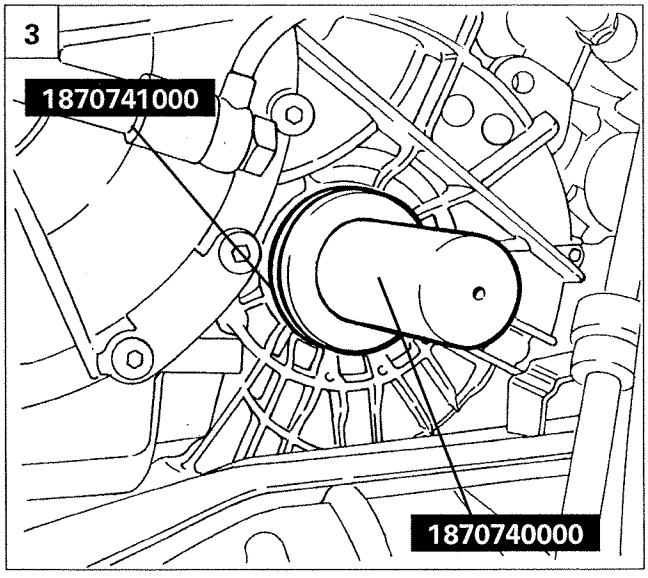

P3U49GB03

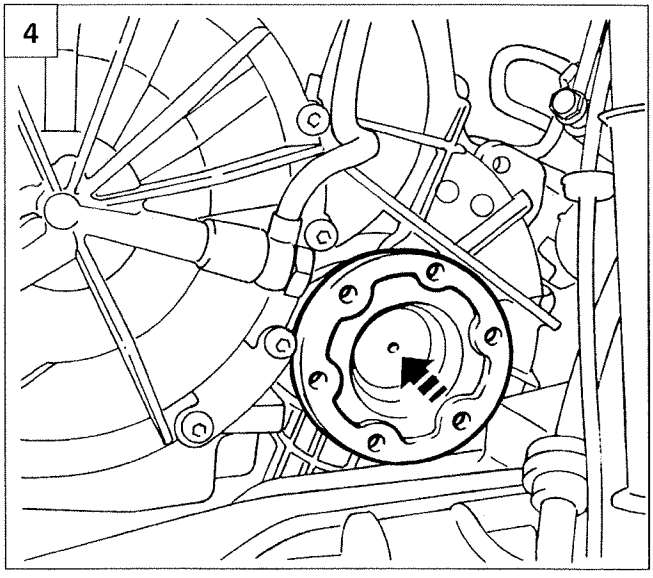

P3U49GB04

LEFT DIFFERENTIAL OIL SEAL

Removing-refitting

Remove the left driveshaft as described previously, then carry out the following operations;

1. using flange 1847017004 and tool 1847017001, extract the differential flange;
2. remove the oil seal;
3. fit a new oil seal using tools 1870741000 and 1870740000;
4. fit the differential flange, making sure that the retaining ring is in the housing.

Refit the driveshaft, reversing the order of the operations carried out for the removal.

21-27.

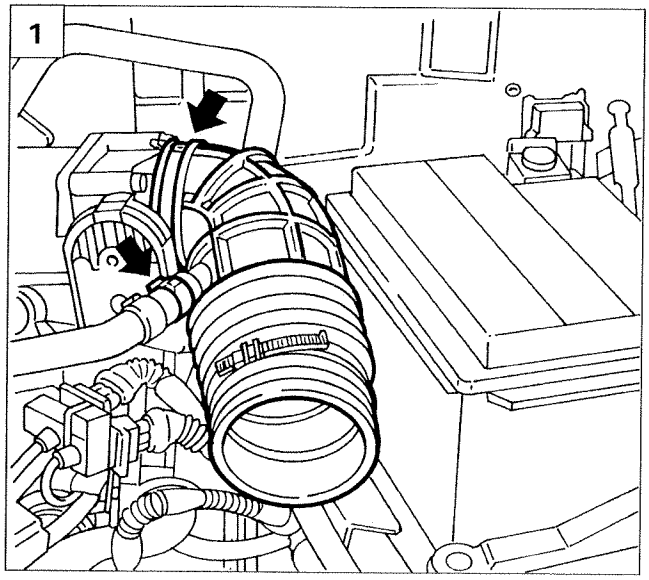

P3U50GB01

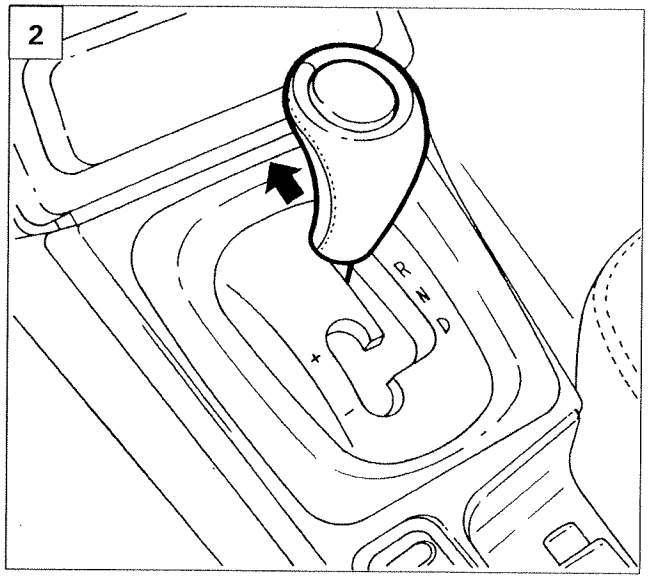

P3U50GB02

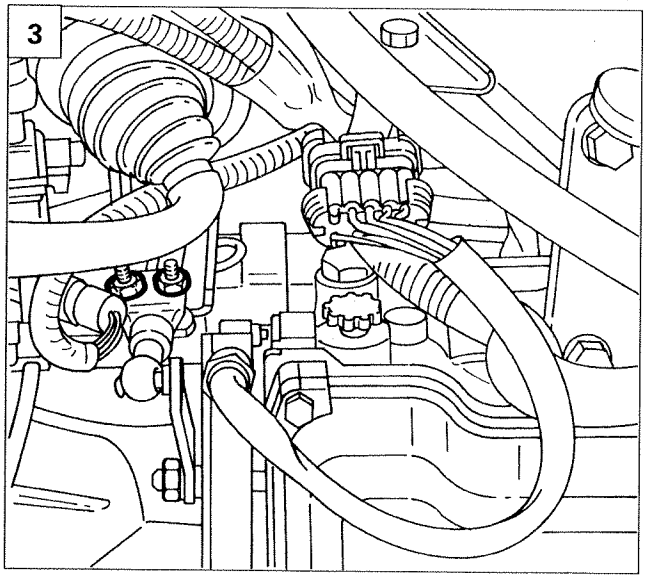

P3U50GB03

GEAR ENGAGEMENT CABLE

Removing

Working via the engine compartment, remove the resonator and the air filter casing as described previously, then carry out the following operations:

1. release the two bands illustrated fastening the oil vapour inlet pipe and the inlet hose to the butterfly casing and remove the actual butterfly casing;
2. make sure that the gear lever is in position P;
3. undo the nuts securing the adjustment device to disconnect the gear engagement cable from the end of the actual device;
4. using round-nosed pliers, close the ends of the retaining spring and release the cable from the housing in the mounting bracket.

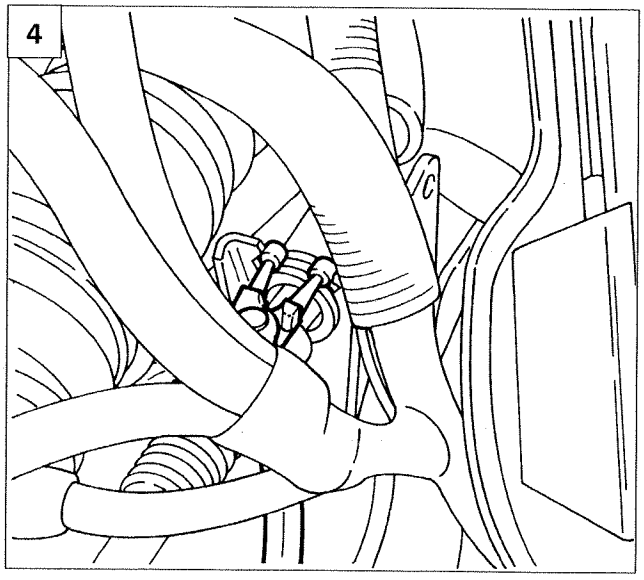

P3U50GB04

1

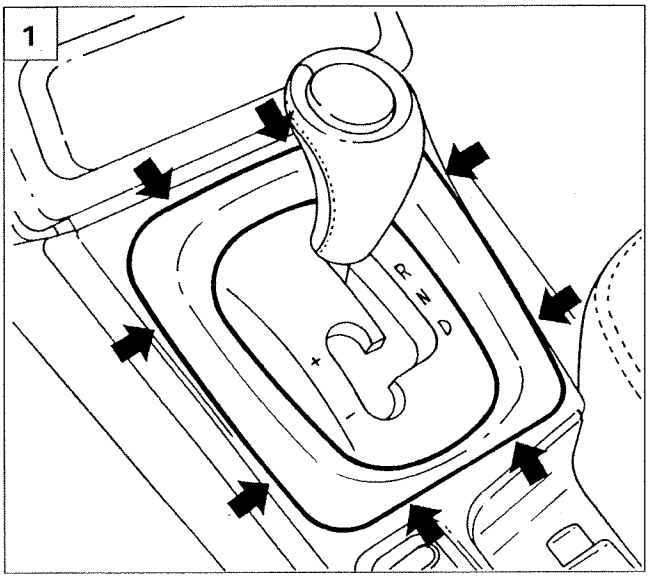

P3U51GB01

Working inside of the passenger compartment, carry out the following operations:

1. remove the plastic cover for the gear control, acting on the eight points illustrated;
2. using a screwdriver, remove the coin holder and the exterior rear view mirrors control switch;

NOTE *Take great care not to damage the walnut trim.*

3. disconnect the connector and remove the switch;
4. undo the three front bolts fixing the walnut trim to the centre tunnel;

2

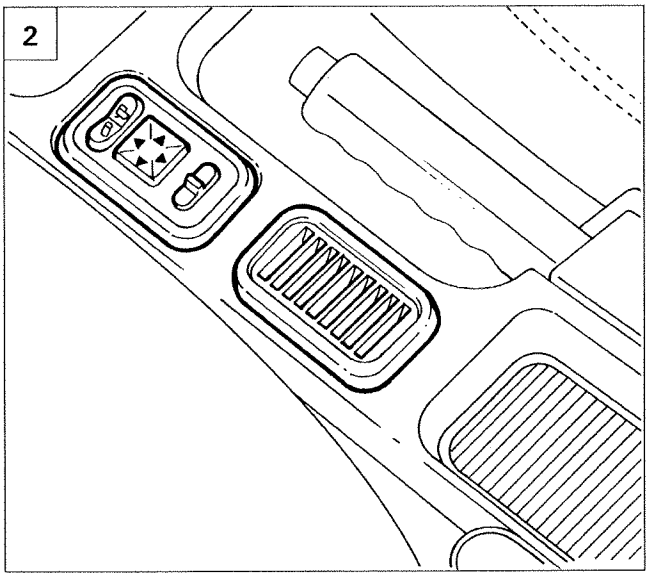

P3U51GB02

3

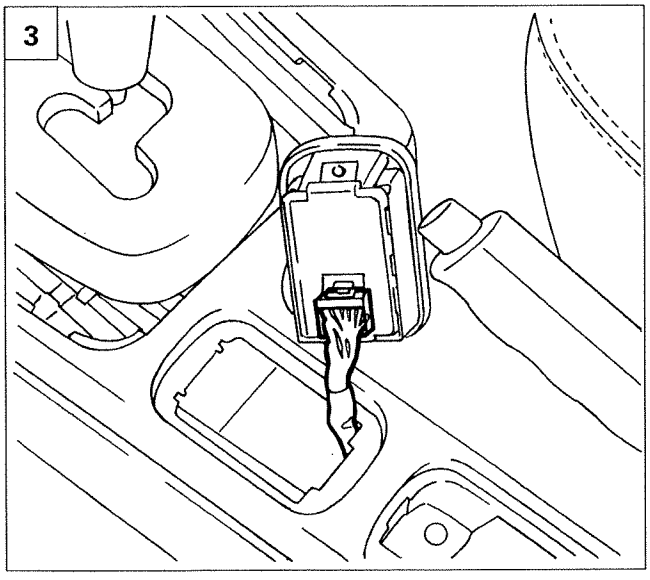

P3U51GB03

4

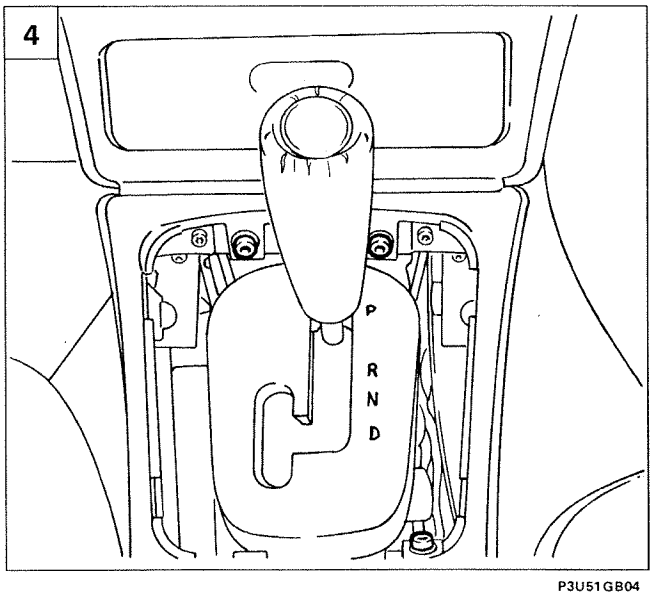

P3U51GB04

Copyright Fiat Auto

21-27.

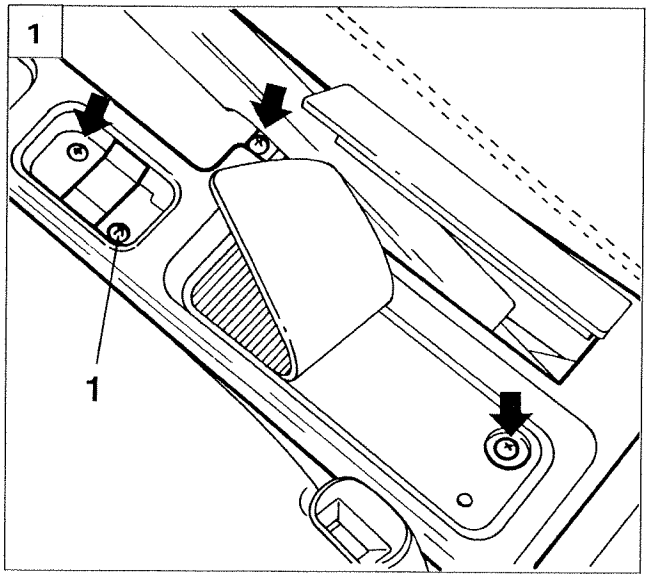

P3U52GB01

1. lift up the handbrake lever and the rubber trim, undo the three bolts shown and remove the walnut trim, then undo the bolt (1) fixing the centre tunnel;
2. move the seats forwards, remove the plastic plugs and undo the four rear bolts (two on each side) fixing the centre tunnel;
3. undo the four front fixing bolts, then remove the centre tunnel, pulling it upwards at an angle of about 30° to release the centering pins;

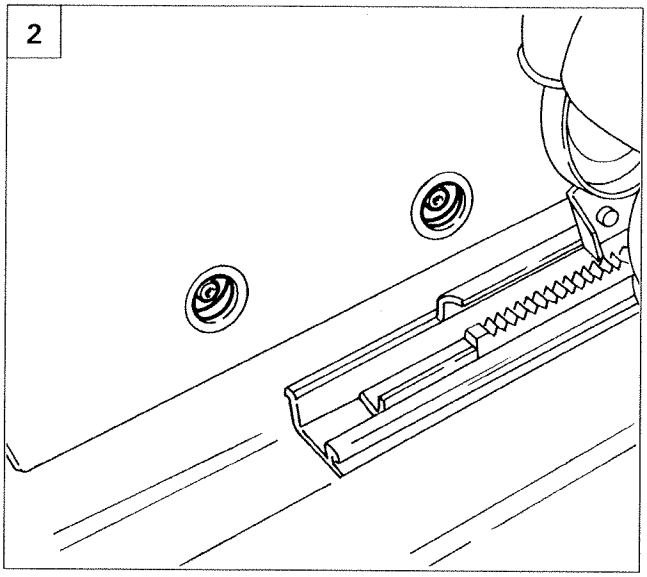

P3U52GB02

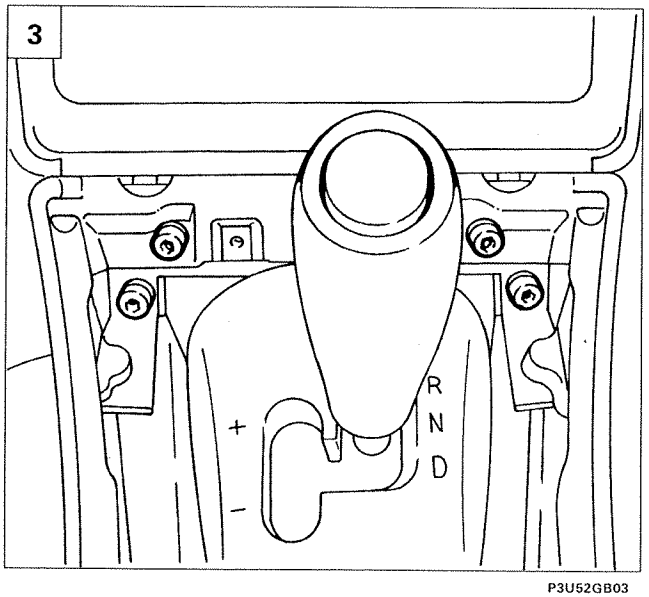

P3U52GB03

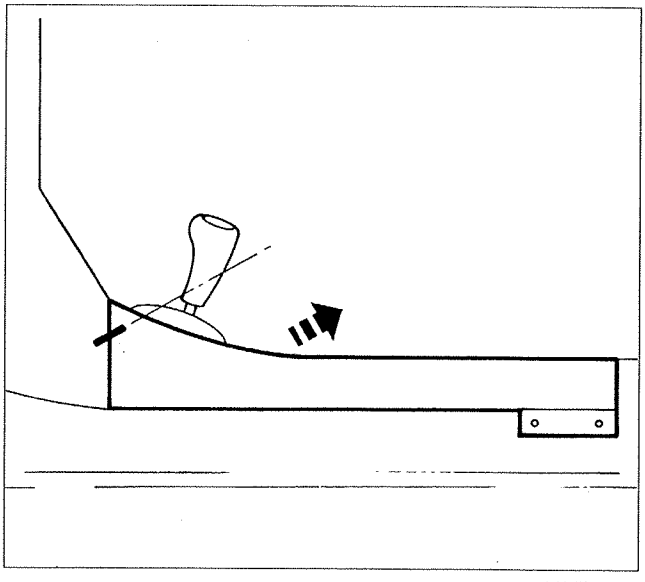

P3U52GB04

1

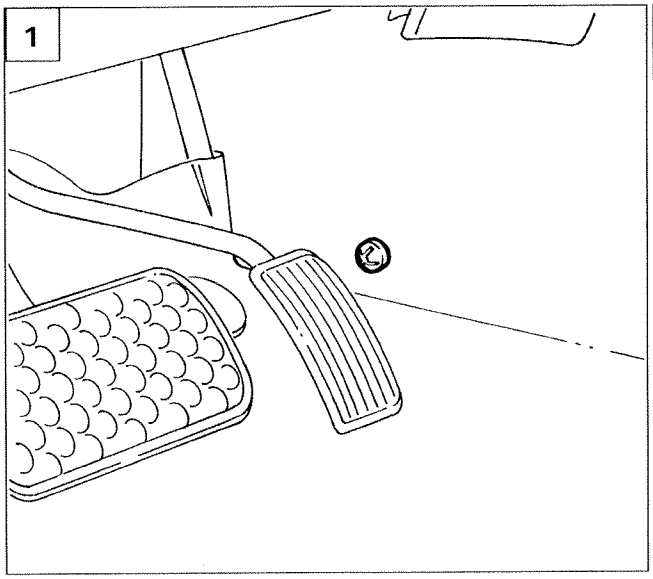

P3U53GB01

2

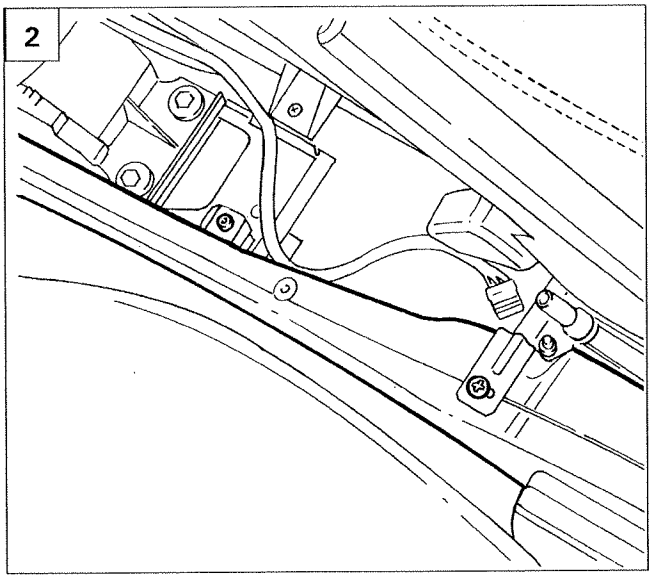

P3U53GB02

3

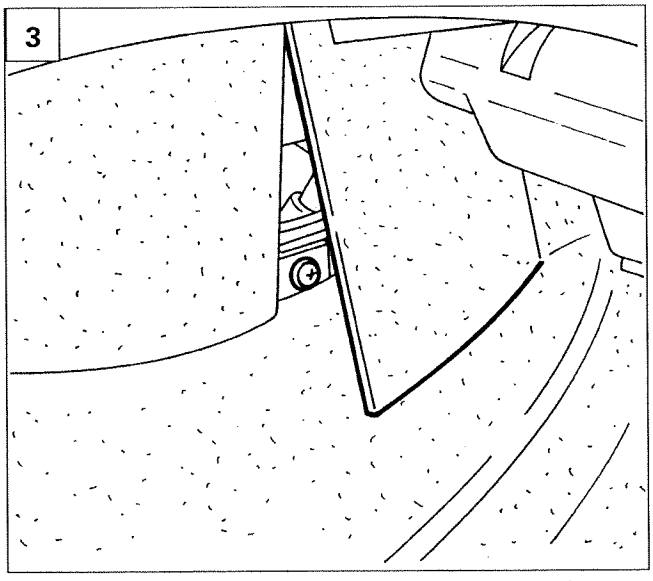

P3U53GB03

1. undo the front bolt fixing the left side bulkhead;
2. undo the two fixing bolts shown and remove the left side bulkhead;
3. remove the front flap and undo the front bolt fixing the right side bulkhead;
4. undo the two fixing bolts shown and remove the right side bulkhead;

4

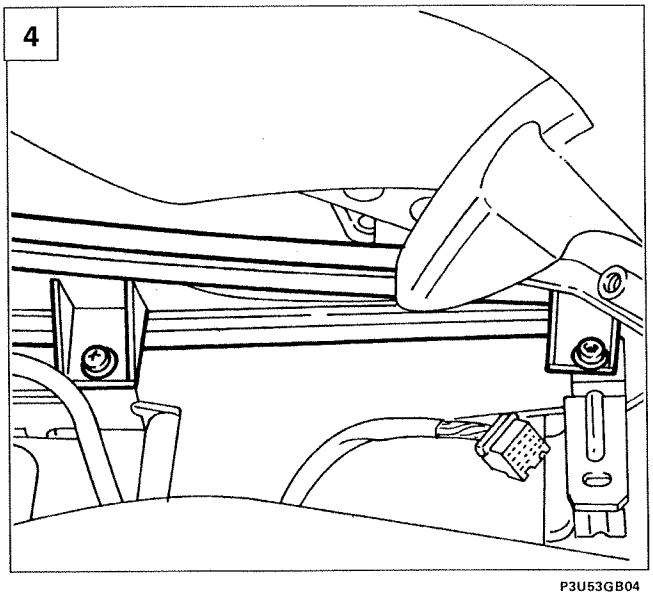

P3U53GB04

Copyright Fiat Auto

21-27.

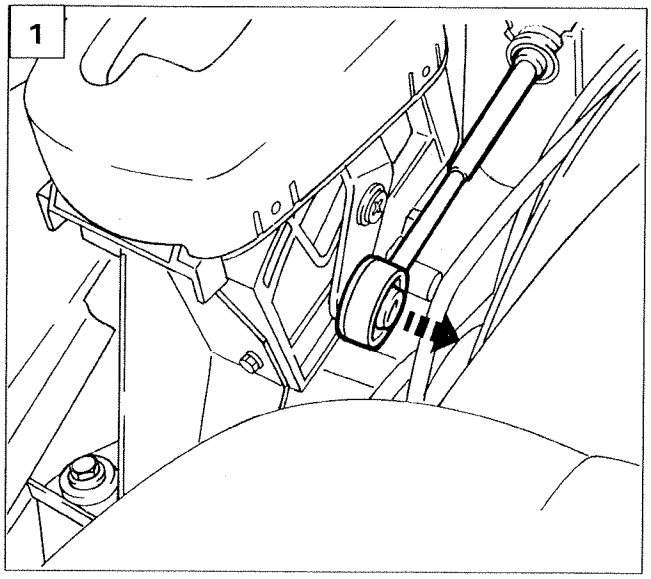

P3U54GB01

1. using a screwdriver, remove the end of the gear engagement cable from the gear control lever;
2. using round-nosed pliers, close the ends of the retaining spring and release the cable from its housing and move it;
3. undo the four nuts and remove the complete gear engagement cable.

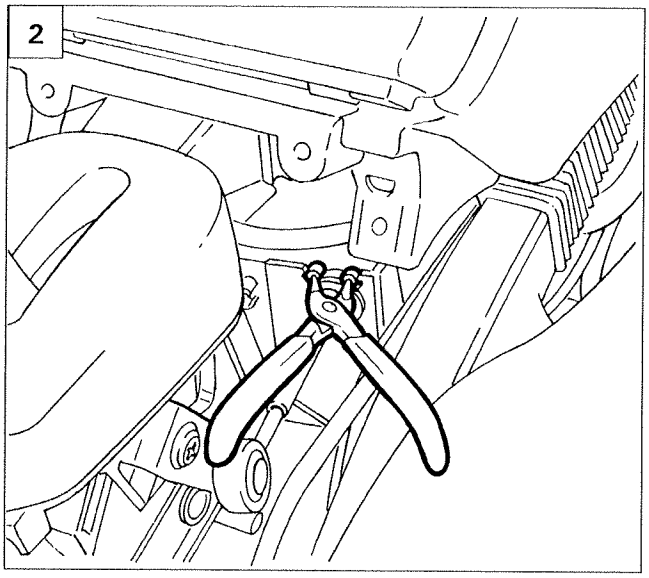

P3U54GB02

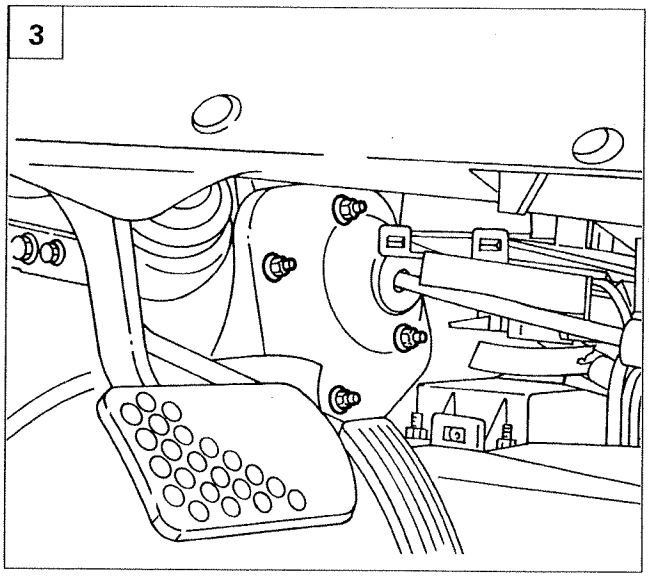

P3U54GB03

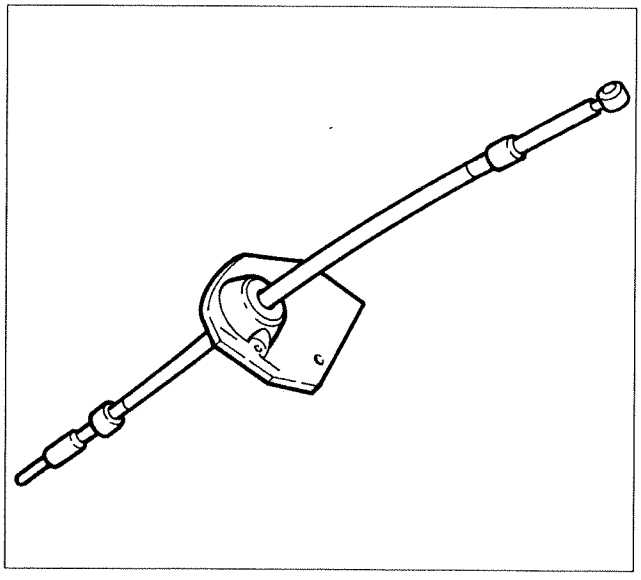

P3U54GB04

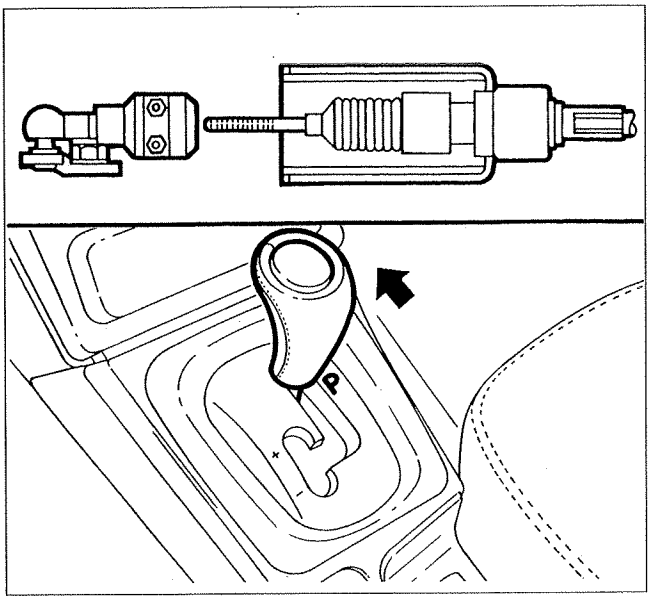

P3U55GB01

Refitting

Refit the gear engagment cable, reversing the order of the operations carried out for the removal from the inside of the passenger compartment.

From the engine compartment, fix the gear engagement cable, carrying out the following operations;

- check that the gear selector engagment lever is positioned in **D**, checking that it is in the end of travel position (completely forwards);
- place the gear lever in position **P**;
- using round-nosed pliers, close the ends of the retaining spring and fit the cable in the housing in the mounting bracket;

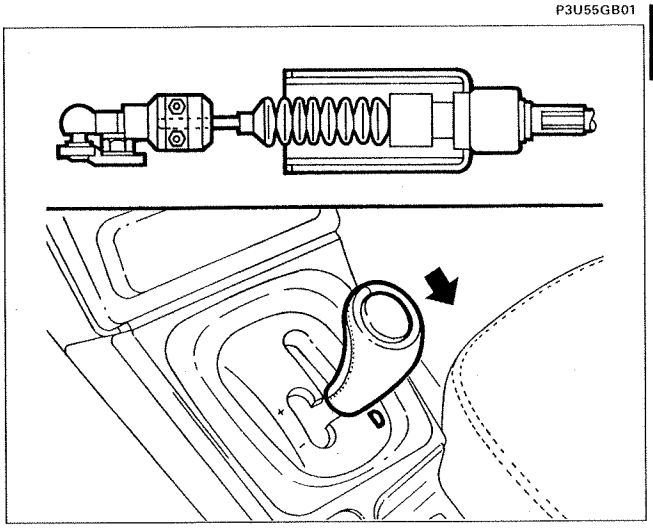

P3U55GB02

- align the end of the gear engagement cable with the end of the adjustment device and, at the same time, via the passenger compartment, move the gear lever from position **P** to position **D**, engaging the end of the gear engagement cable in the end of the adjustment device;
- tighten the nuts securing the adjustment device to a torque of 0.4 daNm;
- manoeuvre the gear lever and check that the click can be heard, in each position, caused by the different positions of the gear selector engagement lever.

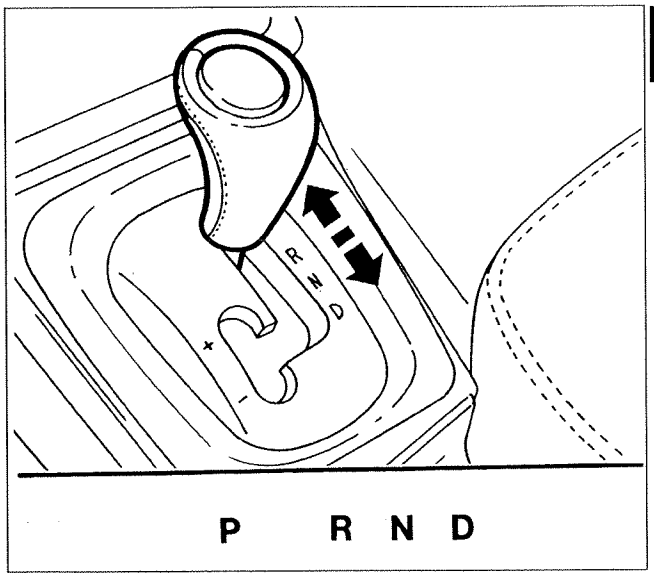

P3U55GB03

Complete the fitting by securing the inlet hose, the air filter casing and the resonator and connecting all the sensors.

Lastly, carry out the following checks:

- it should only be possible to start up the engine with the selector lever in position **P** or **N**;

the signals on the panel and the instrument panel display should correspond to each of the gear lever positions.

Copyright Fiat Auto

21-27.

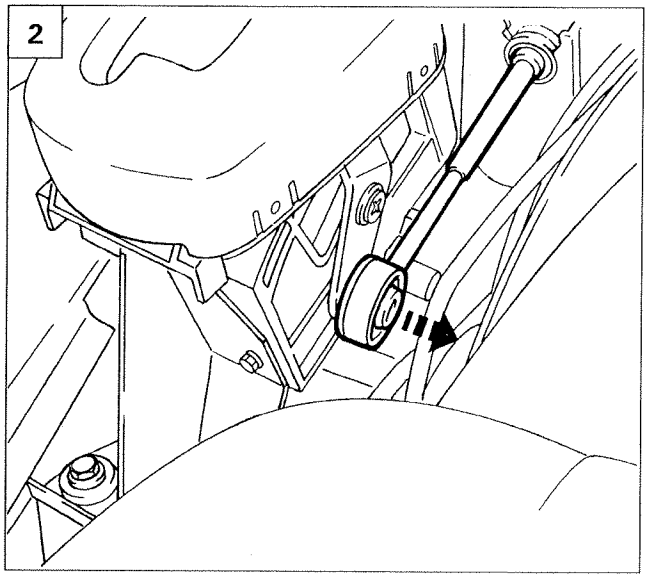

P3U54GB01

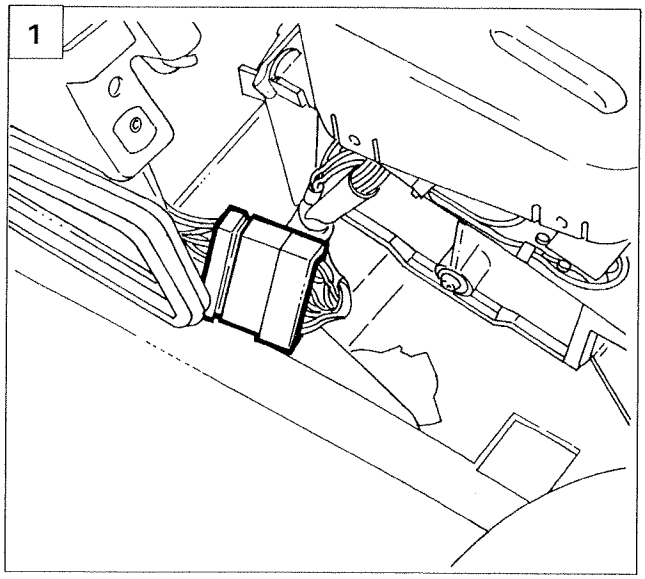

P3U56GB01

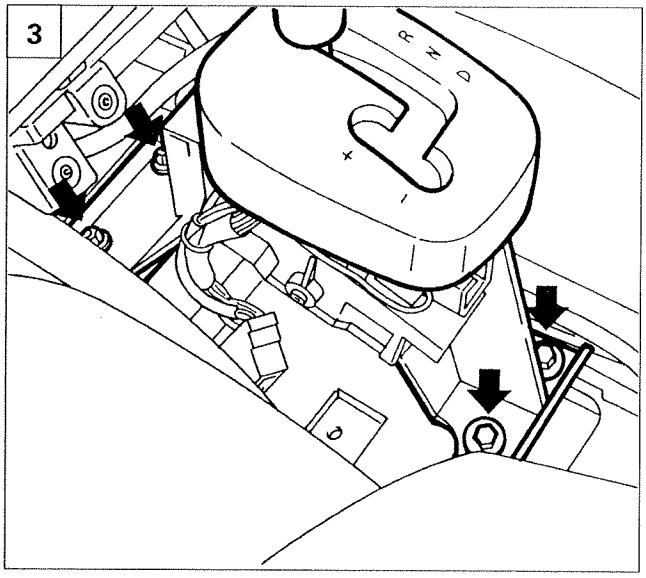

P3U56GB02

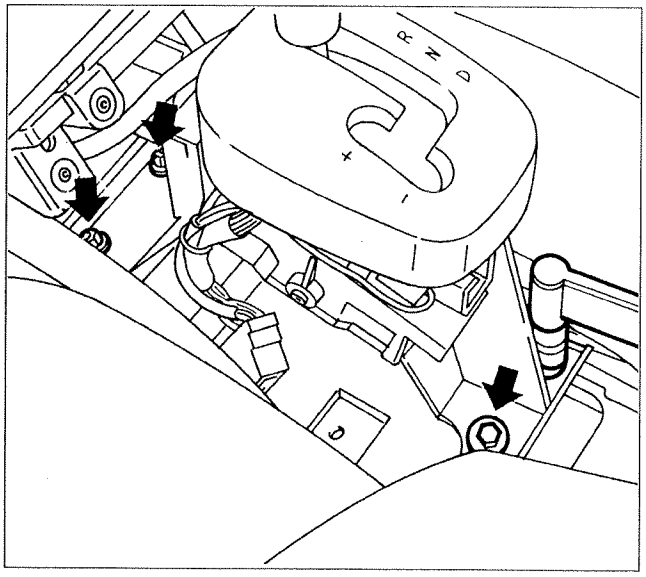

P3U56GB03

GEAR CONTROL LEVER

Removing-refitting

Working inside the passenger compartment, remove the centre tunnel and the side partitions as described previously, then carry out the following operations:

1. disconnect the gear lever connector;
2. using a screwdriver, remove the end of the gear engagement cable from the gear control lever;
3. undo the two rear bolts and the two front fixing nuts and rmeove the gear control lever and mounting.

When refitting, tighten the two rear bolts and the two front fixing nuts to a torque of 0.8 daNm, then reverse the order of the operations carried out for the removal.

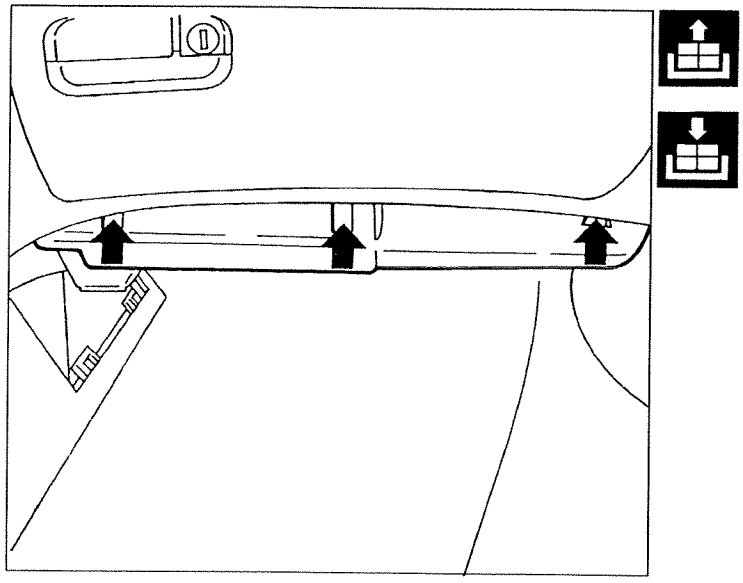

P3U57GB01

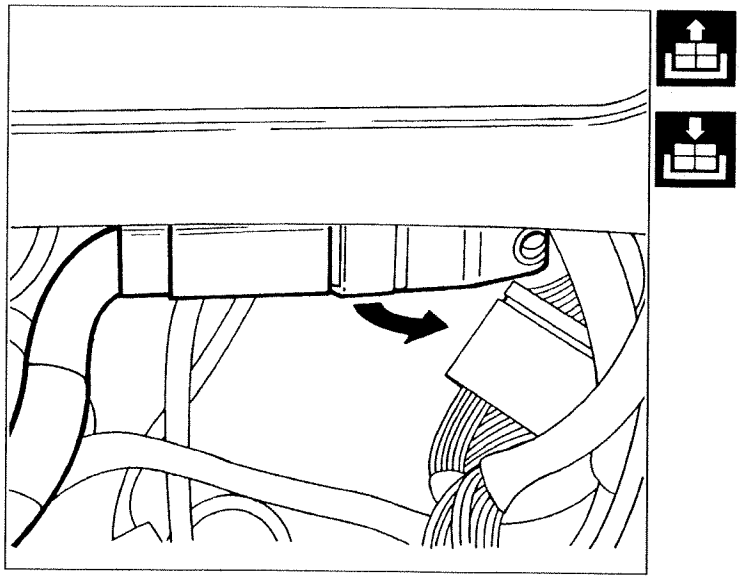

P3U57GB02

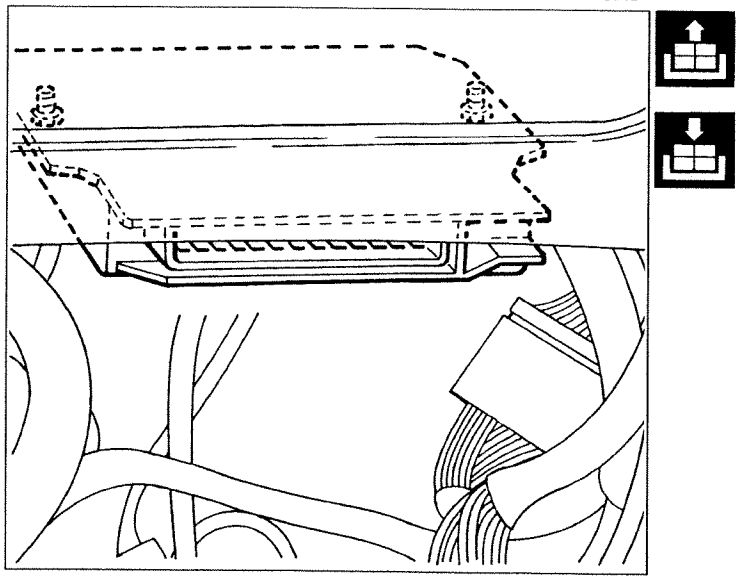

P3U57GB03

ELECTRONIC CONTROL UNIT

Removing-refitting

Carry out the following operations:

- on the passenger side, under the glove compartment, undo the three bolts and remove the wiring shield;
- open the fixing lever and remove the connector for the control unit;
- undo the two fixing bolts and remove the automatic transmission control unit.

When refitting, reverse the order of the operations carried out for the removal.

Copyright Fiat Auto

21-27.

BOLTS FIXING TORQUE CONVERTER TO FLYWHEEL

The torque converter is correctly matched to the flywheel as illustrated in Fig. 1 diagram A and this is achieved as described below:

- **Make sure that the washers (4) are fitted on the bolts (1) securing the flywheel (2) to the converter (3).**
- **Tighten the bolts (1) to a torque of 5 daNm.**

NOTE *It should be remembered that the omission of even one of the* ***washers*** *(4) positioned between the head of the bolts and the flywheel (as illustrated in diagram B fig. 1) would cause marking (6) of the torque converter and adversely affect its operation.*

Fig. 1

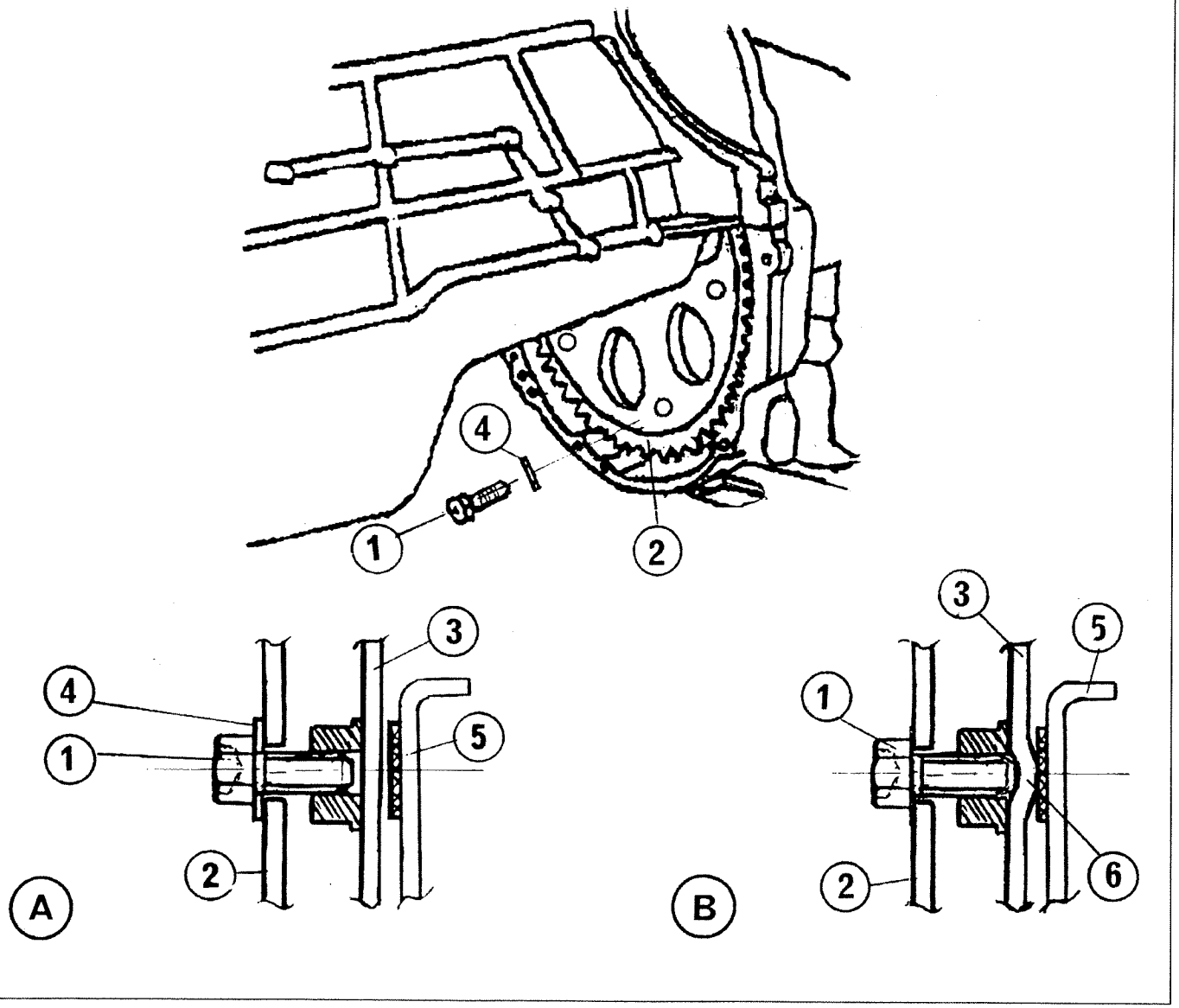

IA01B2001

Key

A. correct fitting
1. bolt
2. Engine flywheel
B. Incorrect fitting
3. Torque converter
4. Washer
5. Clutches
6. mark

OIL LEVEL CHECK

NOTE *The check and, if necessary, the topping up of the automatic transmission fluid level, should be carried out with the gearbox-differential unit fitted on the vehicle after 80,000 km or if the customer reports a leak.*

Carry out the following operations:

- position the vehicle on a lift;
- connect the diagnostic equipment to the diagnostic socket for the automatic transmission and check that the temperature of the transmission fluid is equal to or below 30°C; if this is not the case, wait for it to cool down;
- with the gear lever in position **P**, start up the engine and keep it idling;
- remove the protection under the engine;
- undo the plug (1) on the differential;

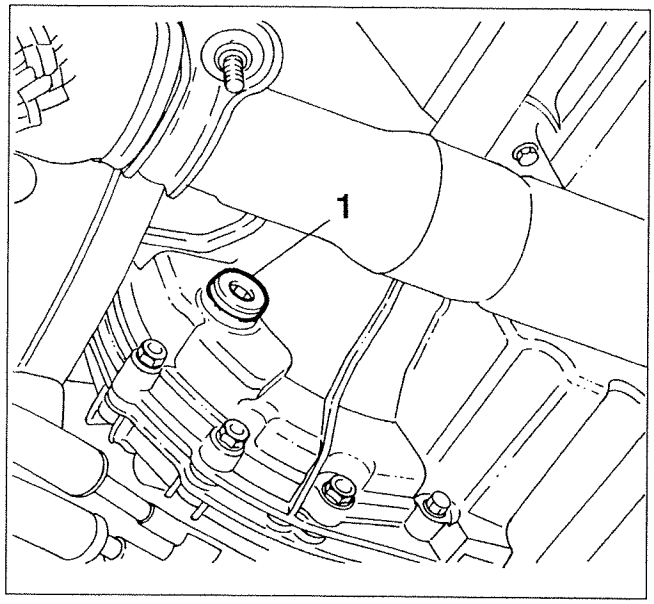

P3U38GB06

- using the diagnostic equipment, check that the temperature of the automatic transmission fluid reaches 40 ± 5°C and check that a few drops or a slight stream of fluid comes out of the gearbox fluid level port in the differential half-casing; if this is not the case, top up as described below:
- check that the temperature of the automatic transmission fluid is equal to or below 30°C; if this is not the case, wait until it cools down;
- top up, using the recommended fluid, through the gearbox fluid level port, until a steady stream comes out of the port;

NOTE *This operation should be carried out using a syringe or a small plastic pump.*

- using the diagnostic equipment, check that the temperature of the automatic transmission fluid reaches 40 ± 5°C and check that a few drops or a slight stream of fluid comes out of the gearbox fluid level port in the differential half-casing;
- tighten the gearbox oil plug (1) on the automatic transmission differential and tighten it to the recommended torque;
- refit the protection under the engine.

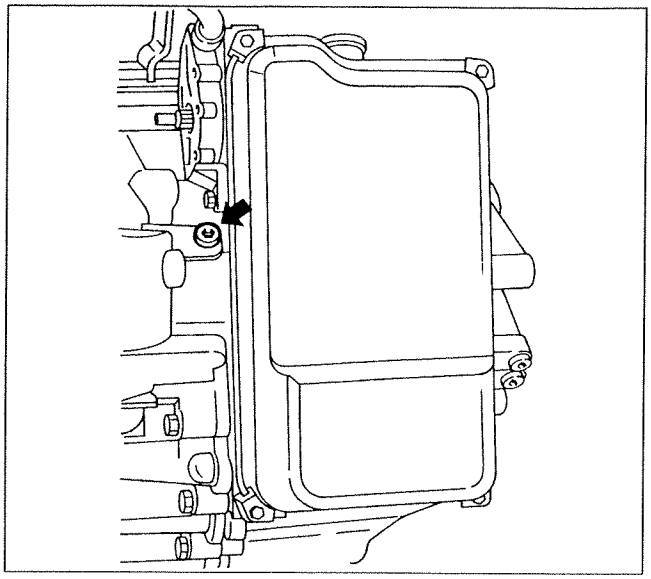

P3U40GB01

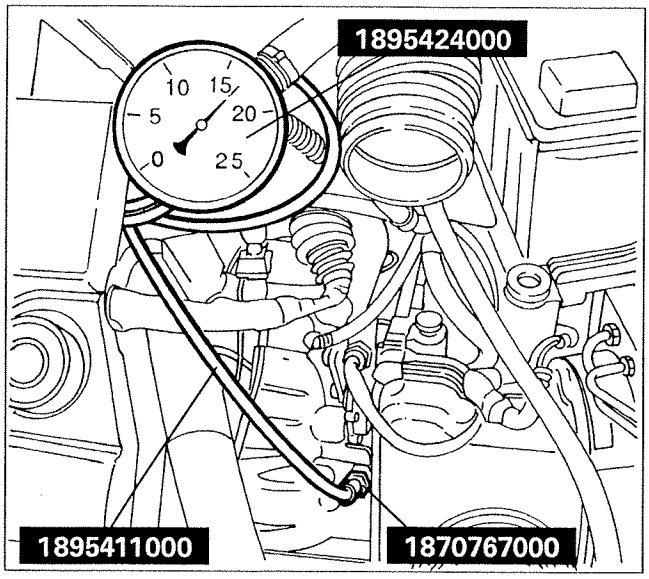

P3U59GB01

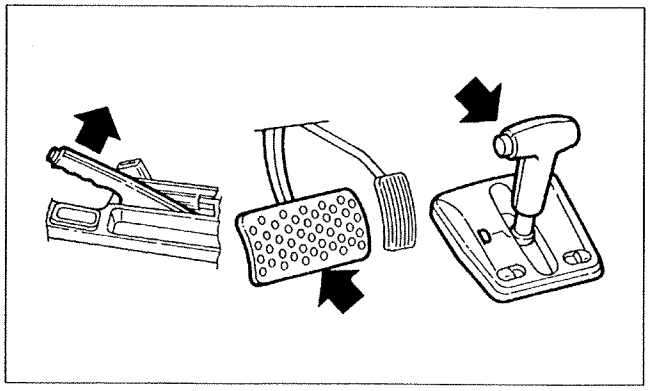

P3U40GB02

HYDRAULIC TEST

Remove the resonator and the air filter casing as described previously, then perform the line pressure test by carrying out the following operations:

- remove the lock-up clutch bolt-plug, located at the front of the gearbox casing (arrow);
- tighten connector 1870767000 in place of the bolt and connect the pressure gauge 1895424000, with a 25 bar end of scale, to the connector using the pipe 1895411000;
- apply the handbrake and press the brake pedal, start up the engine, let it reach operating temperature and check that the idle speed is correct, then move the selector lever into position D and read the line pressure measurement whilst idling.

NOTE *This operations should only be carried out at the idle speed.*

The following figures should be measure.

Pressure in normal conditions:

p = 6-9 bar

Pressure in recovery conditions:

p = 15-18 bar

Automatic transmission and differential

Index

21-27.

page

DESCRIPTION

- Introduction 1
- Location of AISIN automatic transmission control system components on the car 2
- Identification of connections on control module 3
- Diagram showing control module inputs and outputs 4

This publication shows only new features added to the AISIN AW 30510 automatic transmission system used on the LANCIA k 2.0 and 2.4 '98-'99 updates over and above the previous AISIN AW 596 automatic transmission system used on early versions of the LANCIA k 2.0 and described in the relevant publication (publication no. 506.475/03).

Consult the above publication for further information.

Copyright Fiat Auto

DESCRIPTION

ALGEMEEN

The LANCIA k 2.0 and 2.4 20v are fitted with an AISIN automatic transmission unit - 4-speed AW 30510-50A051 (2.0) and AW 30510-50A054 (2.4) versions respectively. These are specially designed for front wheel-drive, transverse engined cars and come with an electronic control system connected to the engine management system.

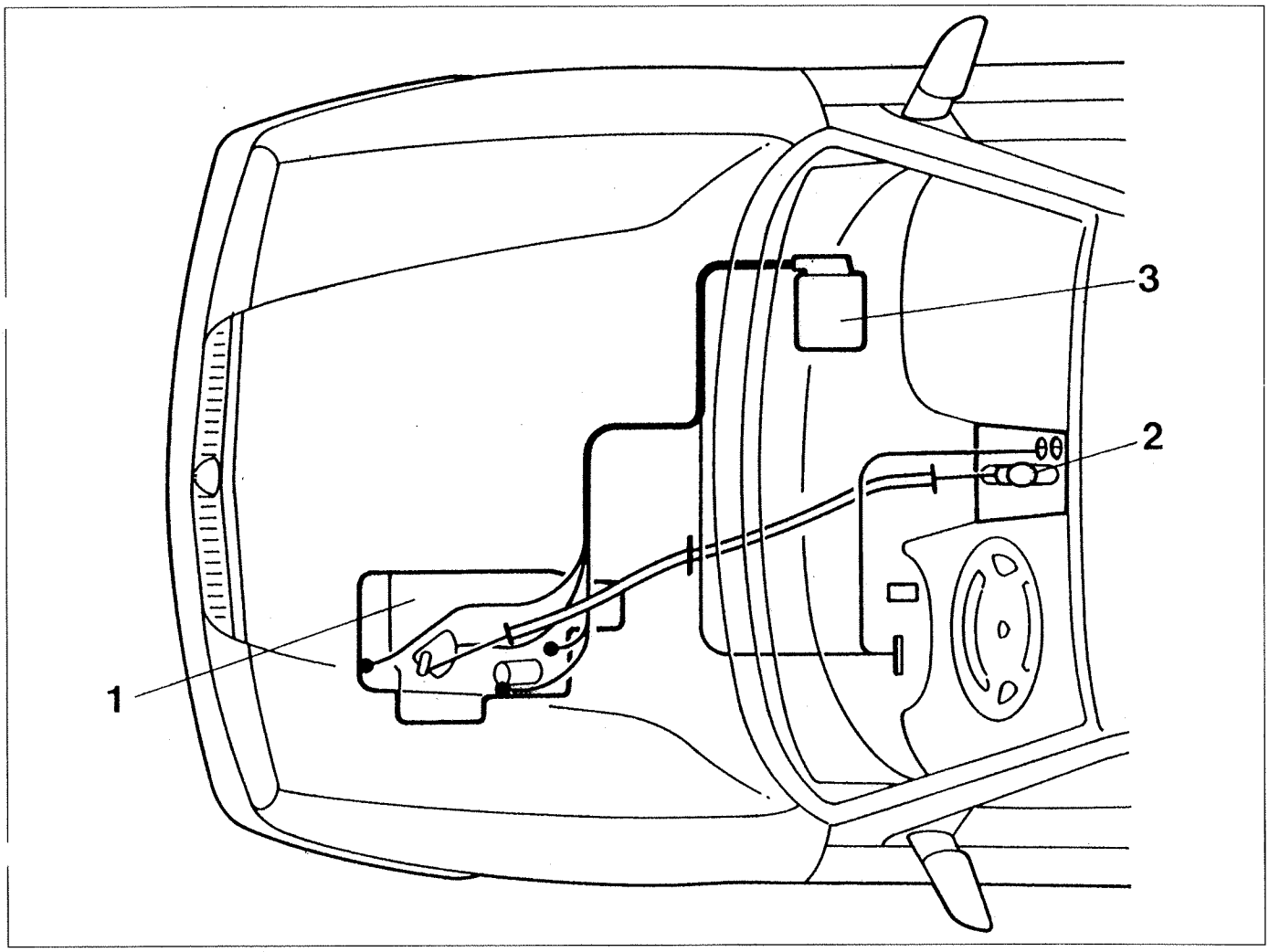

3U001HB01

1. Transmission-differential unit
2. Selector lever
3. Control module

The main new features compared to the previous version are as follows:
- addition of a fast CAN (Communication Area Network) serial communication line as an interface between the engine control unit and transmission control unit to allow reciprocal data exchange;
- elimination of the twin-outlet throttle position sensor because the information is now supplied directly by the engine control unit;
- elimination of a specific coolant sensor because this information is now supplied directly by the engine control unit;
- elimination of the kick-down switch because this information is now supplied directly by the engine control unit;
- addition of specific wiring and a transmission control unit.

Copyright Fiat Auto

21-27.

Diagram showing control module input and output

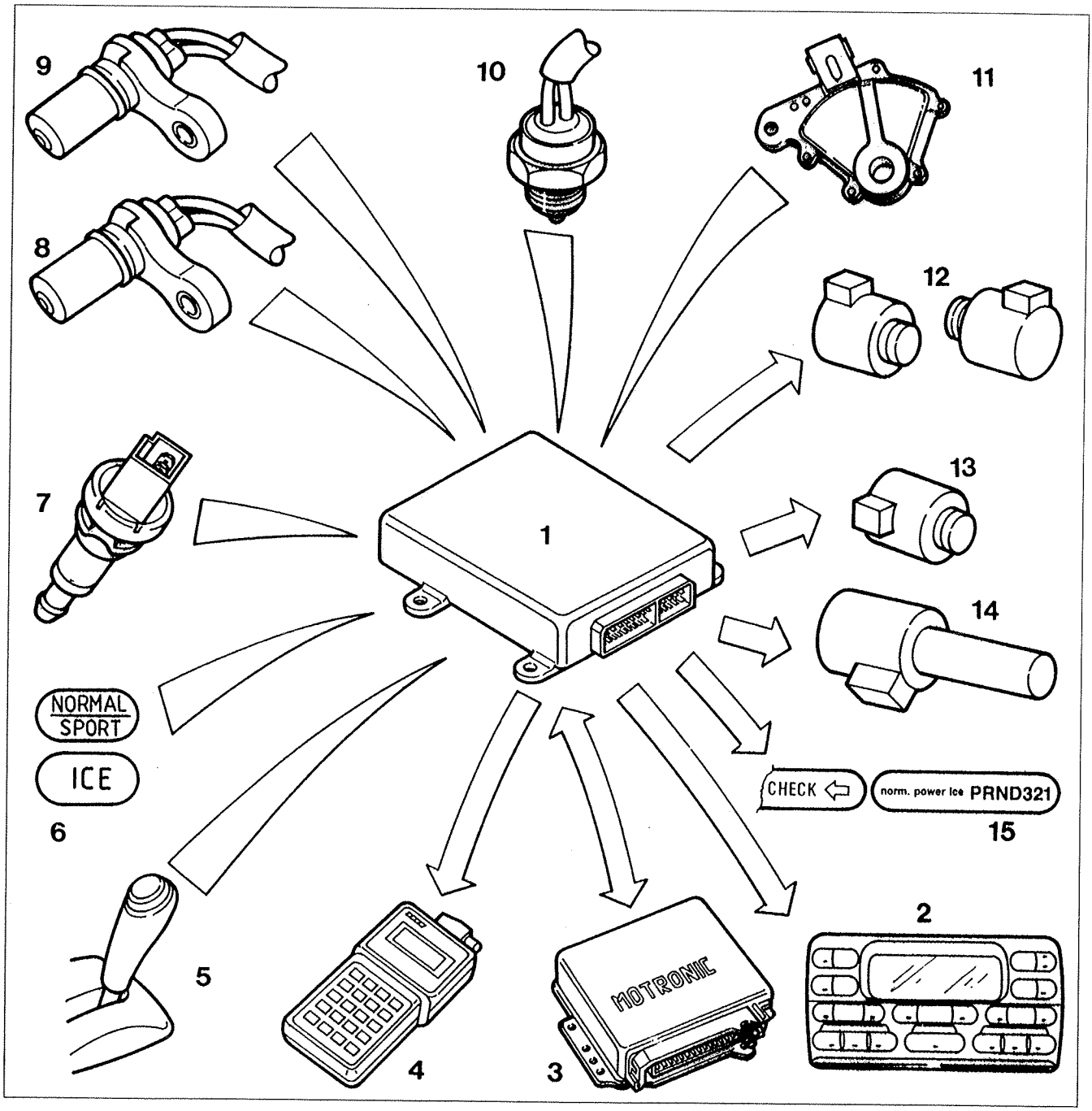

3U004HB04

1. Transmission control module
2. Infocenter
3. Engine control unit
4. Tester connection
5. Selector lever
6. NORMAL/POWER mode and ICE mode switches
7. Brake light switch
8. Mainshaft rpm sensor
9. Vehicle speed sensor
10. Transmission fluid temperature sensor
11. Selector lever position sensor
12. Gear shift solenoids S1 and S2
13. Lock-up clutch solenoid SL
14. Pressure control solenoid STH
15. Instrument panel

Identification of connections on control module

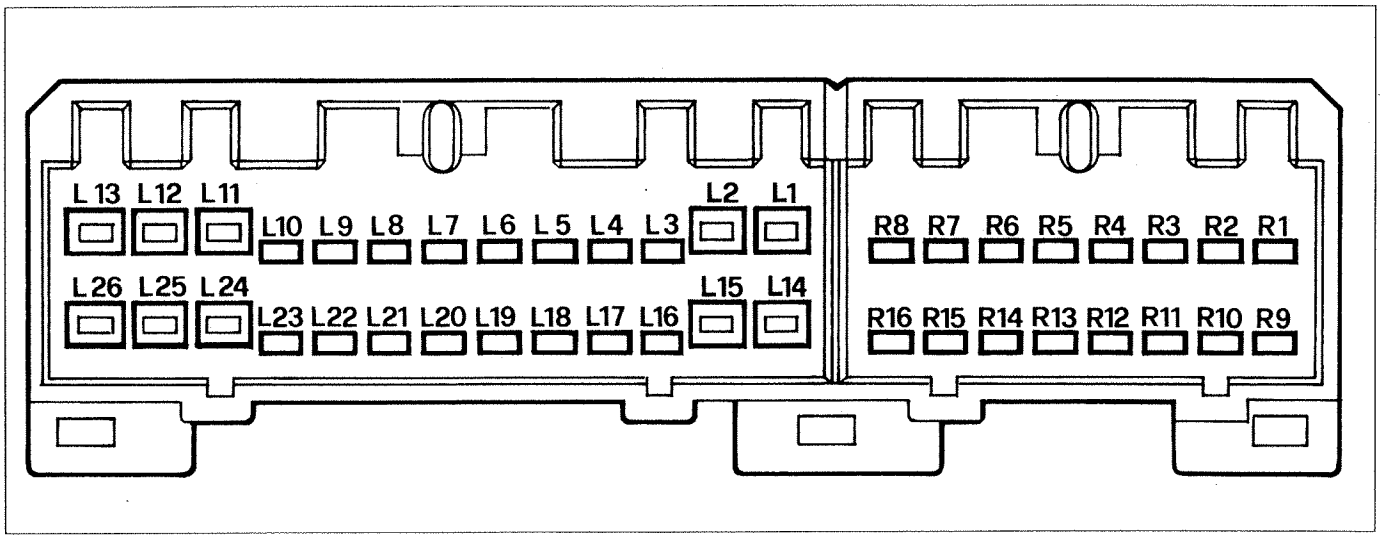

3U003HB01

Pin	Connection
R1	Throttle opening signal input
R2	Speed sensor lead shielding earth
R3	Mainshaft rpm sensor (-)
R4	Car speed sensor (-)
R5	NORMAL/SPORT mode switch
R6	NC
R7	Selector lever position sensor (C)
R8	NC
R9	Output for torque reduction signal
R10	Input for engine coolant temperature signal
R11	Mainshaft rpm sensor (+)
R12	Vehicle speed sensor (+)
R13	NC
R14	ICE mode switch
R15	NC
R16	Selector lever position sensor (PA)

Pin	Connection
L1	Pressure control solenoid STH (-)
L2	Earth on car
L3	Selector lever position sensor (A)
L4	NC
L5	Transmission fluid temperature sensor (-)
L6	NC
L7	NC
L8	Earth on car
L9	Brake light switch
L10	Display on instrument panel - Selector lever position - Driving mode - Transmission fault/high fluid temperature warning light
L11	Pressure control solenoid STH (+)
L12	Battery positive
L13	Solenoid S1
L14	NC
L15	NC
L16	Selector lever position sensor (B)
L17	NC
L18	Transmission fluid temperature sensor (+)
L19	NC
L20	NC
L21	Tester connection earth (line G)
L22	Tester connection (Line L)
L23	Tester connection (Line K)
L24	Lock-up clutch solenoid SL
L25	Ignition-controlled positive
L26	Solenoid S2

Copyright Fiat Auto

21-27.

The above changes are possible due to the adoption of an engine control system with a motorised throttle body. Because the throttle is controlled directly, the response is improved when the transmission requests a reduction in drive torque.
The central console has also been modified inside to allow the addition of a lever and buttons derived from those fitted to the 3.0 V6 Sport-Tronic version.

Location of AISIN automatic transmission control system components on the car

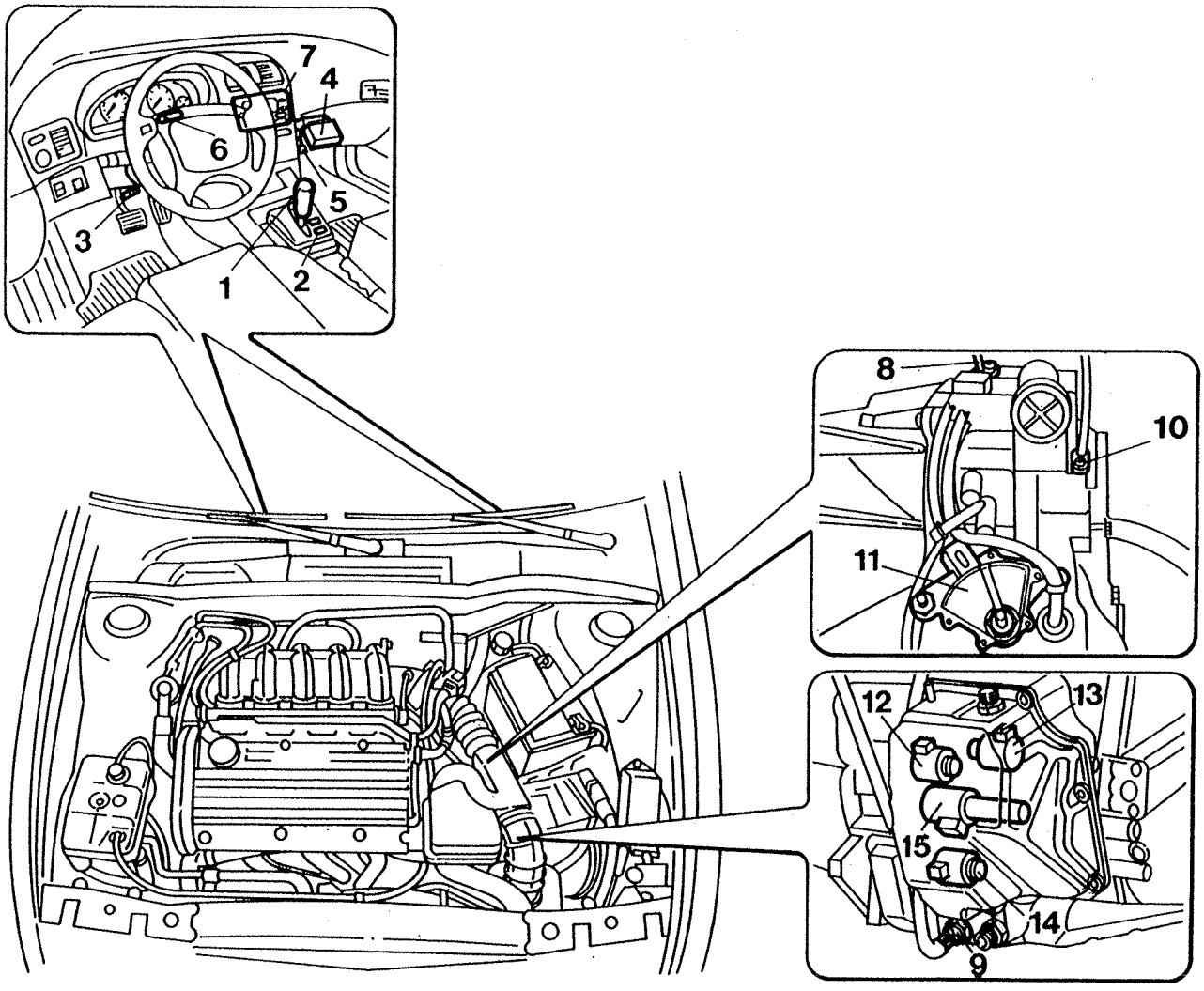

3U002HB02

1. Selector lever
2. NORMAL/POWER mode and ICE mode switch
3. Brake light switch
4. Gearbox control module
5. Tester connection
6. Instrument panel
7. Infocenter
8. Vehicle speed sensor
9. Transmission fluid temperature sensor
10. Mainshaft rpm sensor
11. Selector lever position sensor
12. Gear shift solenoid S1
13. Gear shift solenoid S2
14. Lock-up clutch solenoid SL
15. Pressure control solenoid STH

page

BOSCH ANTI-SKID SYSTEM
A.B.S.

- Active sensors 1
- Bosch 5.3 ABS system wiring diagram 2
- EBD function 3
- EBD operation 4

The following pages describe the operation of the Bosch 5.3 A.B.S. with EBD function adopted on all versions of the LANCIA k 1998 range. The system is only described where it differs from the previous version without EBD function.
For further information, refer to the Bosch 5.3 A.B.S. described in the Lancia k, Workshop Manual, Volume 1 (publication no. 506.475/08).

Copyright Fiat Auto

COPYRIGHT FIAT AUTO

The reproduction, even partial, of the text and illustrations is prohibited.

The information contained in this publication is purely indicative and could be out of date following modifications made by the Manufacturer, at any time, for technical or commercial reasons or in order to conform to legal requirements in the various countries.

Fiat Auto S.p.A.
D.M.C. - M.P.S.
Servizi Post Vendita - Tecnologie Assistenziali
Largo Senatore G.Agnelli, 5 - 10040 Volvera - To (Italia)
Publication no. 506.475/24 - Ottobre 1998 - 400
Printed by Satiz S.p.A. - Turin (Italy)
order no. 60446238

EBD (Electronic Brake-force Distribution) FUNCTION

The introduction of the 5.3 ABS allows the brake force to be distributed between the front and rear axles, using a specific function of the electronic control unit.

The electronic control unit thus continuously compares the speed of the front and rear wheels by means of the speed sensors, and controls the electrohydraulic unit so as to stop the rear wheels locking, thus achieving maximum roadholding under all load conditions.

The EBD function means that the hydraulic brake pressure proportioning valve, which acts in accordance with the load on the rear axle, is superfluous, and so the latter has been eliminated from the braking system.

The graph below shows the intervention of the EBD system (curve D) in relation to the pressure present in the braking system (curve A), the ideal pressure to the rear brakes (curve B) and the reduction in pressure to the rear brakes normally effected by the conventional brake pressure proportioning valve (curve C).

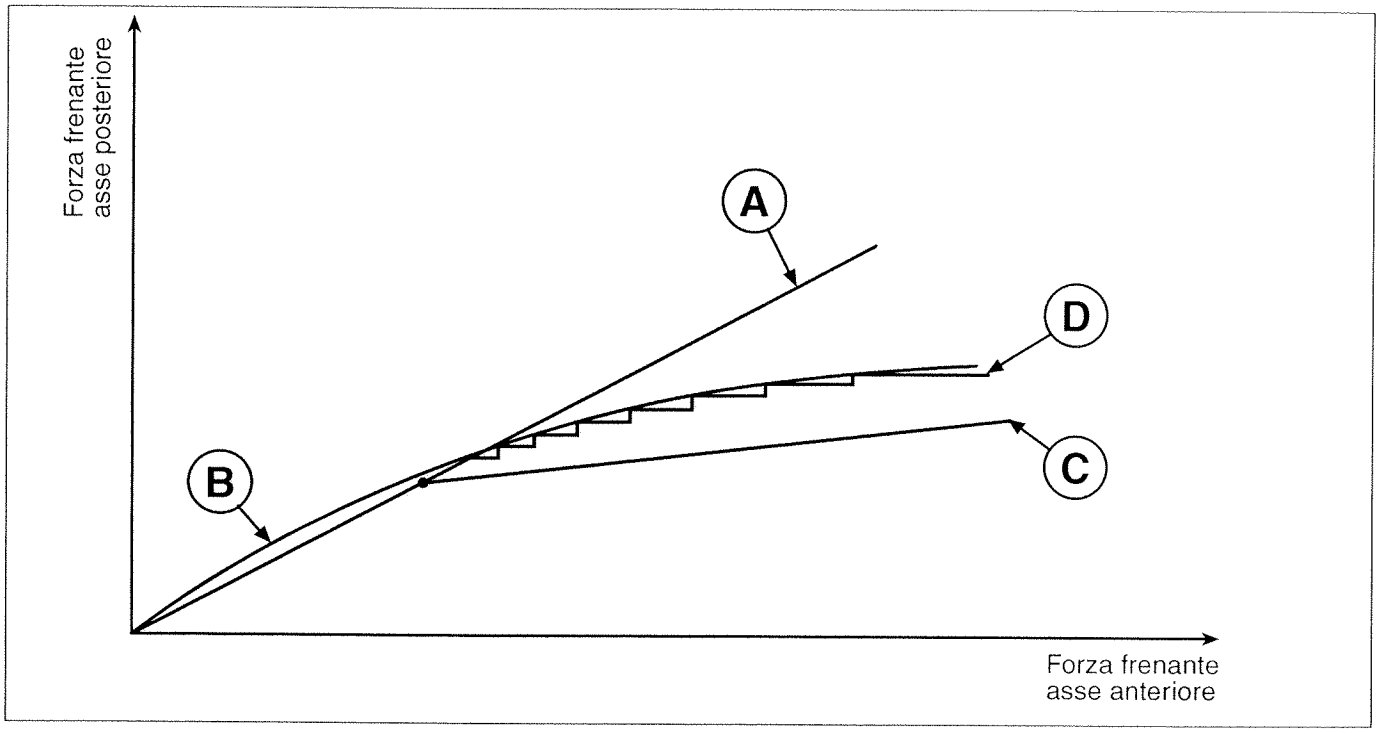

A. Distribution effected by the braking system

B. Ideal distribution

C. Distribution effected by the mechanical brake pressure proportioning system

D. EBD control

As may be observed, the EBD function of the ABS can adapt to the ideal pressure curve, achieving the best possible road holding under all braking conditions.

Copyright Fiat Auto

33.

The integration of the EBD function in the normal ABS logic allows the two strategies to operate simultaneously; so the system intervenes normally so as to maintain the "skidding" of the rear wheels between values very close to the ideal values, with the possibility of intervening with the ABS strategy when a rear wheel tends to lock (for example when driving on a surface with less grip).

The graph below illustrates the braking pressure strategy, controlled by the electronic control unit in accordance with the input data, represented by the signal relating to the speed of rotation of the front and rear wheels.

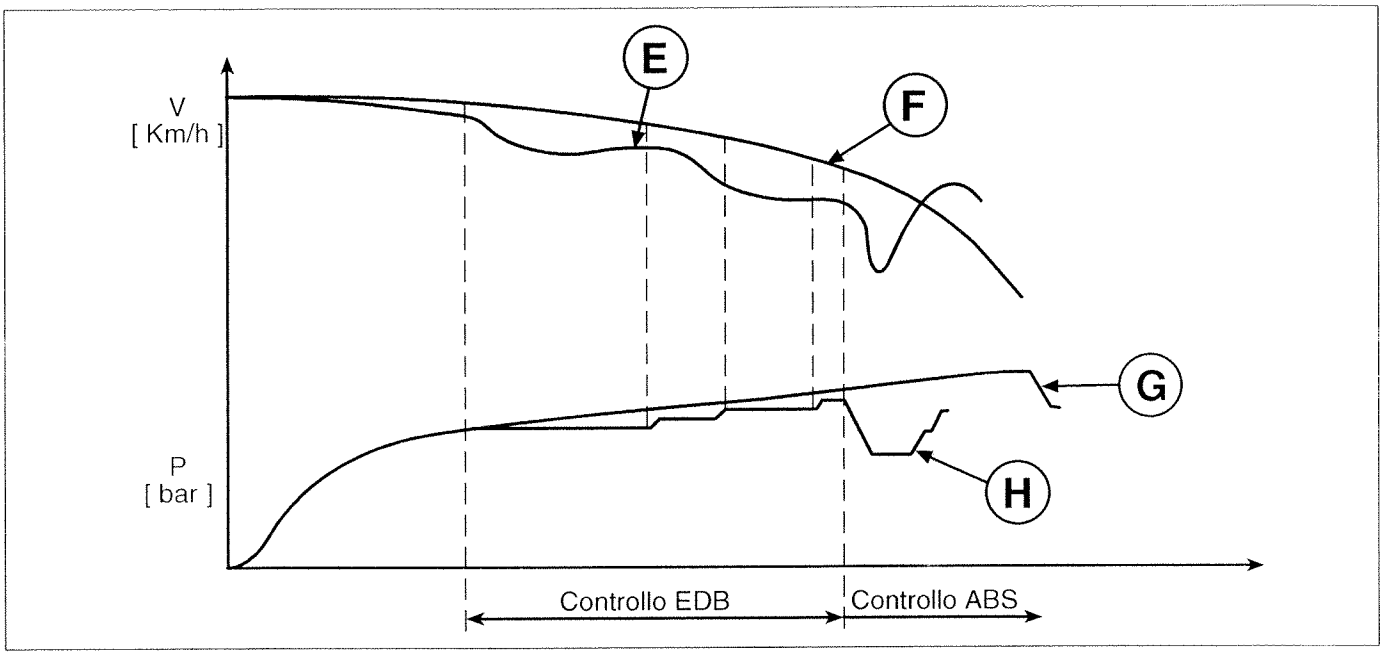

P3U20AD01

E. Rear wheel speed

F. Front wheel speed

G. Front wheel pressure

H. Rear wheel pressure

OPERATION OF EBD

The braking pressure of the rear wheels is controlled by the control unit in the same way as described for the operation of the A.B.S. in the "Pressure maintenance stage" and the "Pressure reduction stage", with the difference that the recycling pump is not activated and any surplus hydraulic fluid is recovered in the low-pressure accumulator.
The fluid returns to the delivery circuit when the brake pedal is released.

NOTE *If the warning lights and come on when the engine is running, this means there is a fault in the EBD system.*
If only the warning light comes on when the engine is running, this means that there is a fault in the ABS only. In this case the braking system continues to function, although without the anti-lock braking system, and the efficiency of the EBD may be reduced.

BOSCH 5.3 ANTI-LOCK BRAKING SYSTEM

The Bosch 5.3 anti-lock braking system fitted to the '98 range Lancia k has two differences compared with the previous version:
- adoption of "active" wheel speed sensors:
- adption of the electronic braking distributor (EBD function).

The following pages describe the variants of the system, not present on the preceding version.

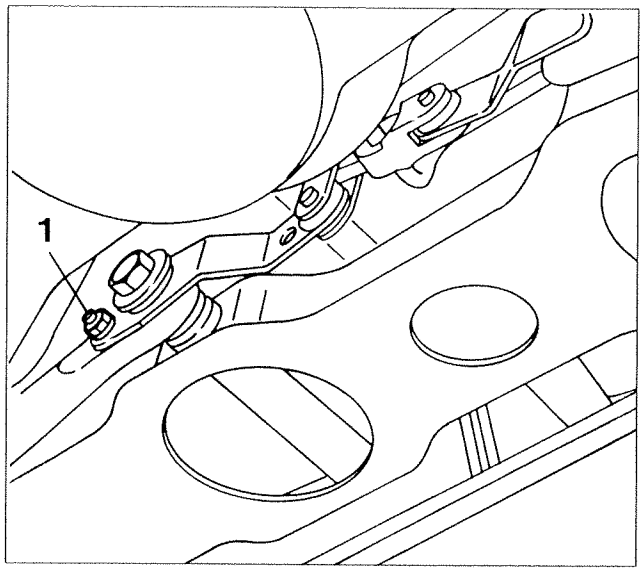

P3U21AD01

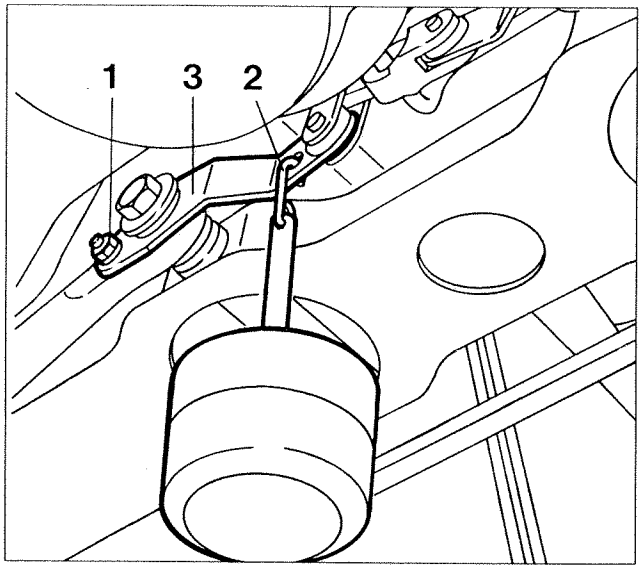

P3U21AD02

ACTIVE SENSORS

These consist of two basic elements:
- a multi-pole magnetic coder (1) built into the "instrumented" wheel bearing;
- a Hall-effect sensor (2) opposite the coder.

The advantages offered by the adoption of the active sensors are that they:
- reduce sensitivity to electromagnetic interference;
- withstand interference generated by the heating of the road surface;
- save weight and size;
- simplify the transmission couplings to eliminate the phonic wheels.

Wiring connector

The numbers in squares indicate the corresponding terminals of the A.B.S. control unit:

A: front left wheel
B: front right wheel
C: rear left wheel
D: rear right wheel

Copyright Fiat Auto

WIRING DIAGRAM OF BOSCH 5.3 A.B.S.

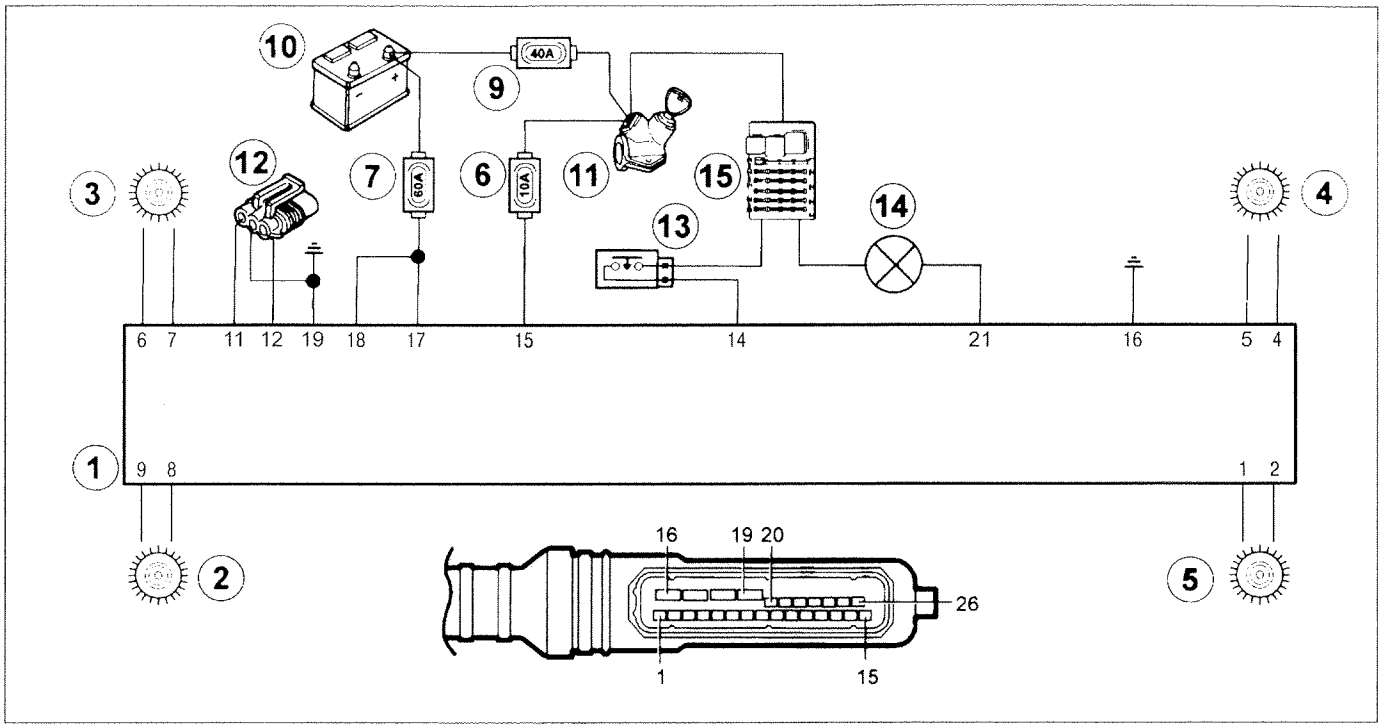

P3U32AD01

1. Electronic control unit
2. Rear left speed sensor (RL)
3. Front left speed sensor (FL)
4. Front right speed sensor (FR)
5. Rear right speed sensor (RR)
6. 10A fuse
7. 60A fuse
9. Fuse protecting ignition-switch dependent devices
10. Battery
11. Ignition switch
12. Diagnostic socket
13. Stop lights switch
14. A.B.S. warning light
15. Fuse and relay unit

Identification of pins on electronic control unit and relevant connector

No.	Destination	No.	Destination
1	To rear right speed sensor -	15	To fuse 10A pin +15 of ignition switch
2	To rear right speed sensor +		
3	Spare	16	To earth
4	To front right speed sensor -	17	To 60A fuse battery positive +12V
5	To front right speed sensor +	18	To 60A fuse battery positive +12V
6	To front left speed sensor -	19	To earth
7	To front left speed sensor +	20	Spare
8	To rear left speed sensor -	21	To fault warning light
9	To rear left speed sensor +	22	Spare
10	Spare	23	Spare
11	To diagnostic socket K line	24	Spare
12	To diagnostic socket L line	25	Spare
13	Spare	26	Spare
14	To stop lights switch		

Braking system
Front brakes
33.

page

Brembo brake calipers 1
Ventilated brake discs 4
Bleeding 5

Copyright Fiat Auto

COPYRIGHT FIAT AUTO

The reproduction, even partial, of the text and illustrations is prohibited.

The information contained in this publication is purely indicative and could be out of date following modifications made by the Manufacturer, at any time, for technical or commercial reasons or in order to conform to legal requirements in the various countries.

Fiat Auto S.p.A.
D.M.C. - M.P.S.
Servizi Post Vendita - Tecnologie Assistenziali
Largo Senatore G.Agnelli, 5 - 10040 Volvera - To (Italia)
Publication no. 506.475/24 - Ottobre 1998 - 400
Printed by Satiz S.p.A. - Turin (Italy)
order no. 60446238

1

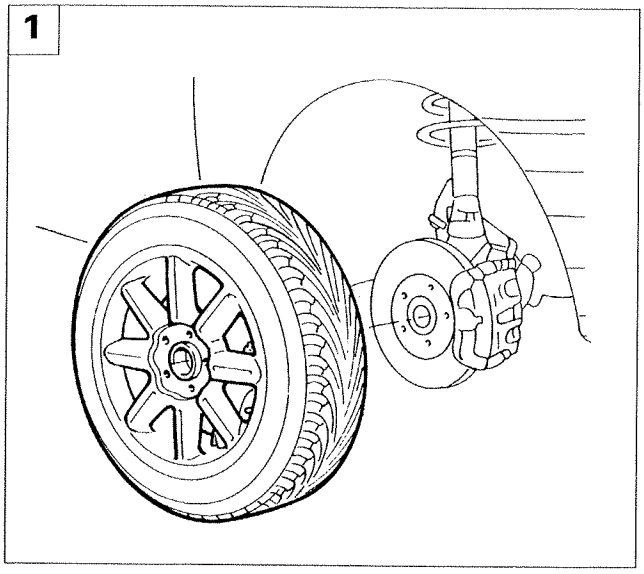

P3U01BD01

2

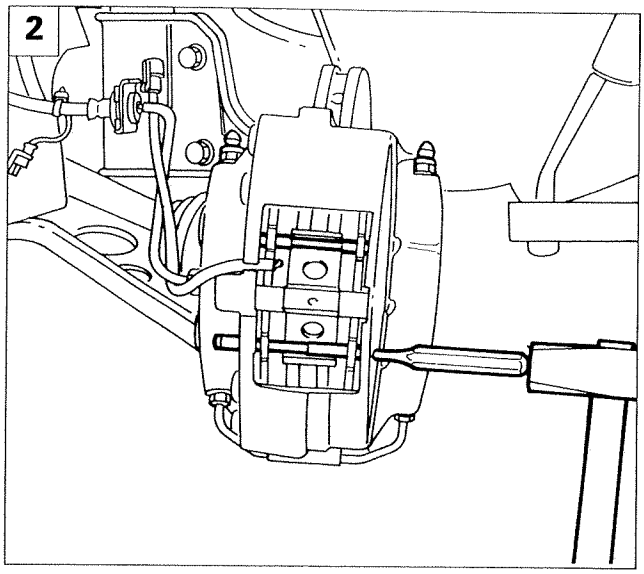

P3U01BD02

3

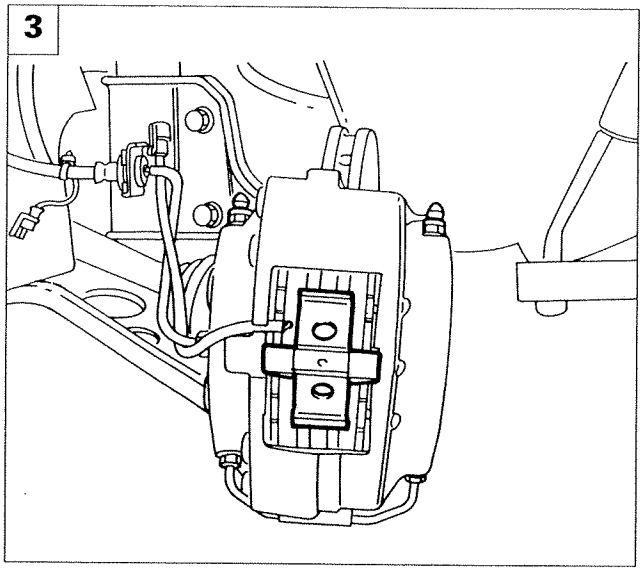

P3U01BD03

4

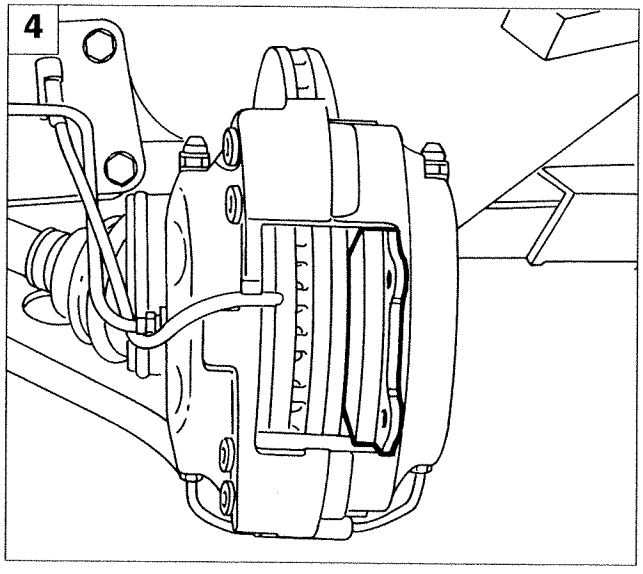

P3U01BD04

BREMBO BRAKE CALIPERS

Replacing brake linings

Proceed as follows:
1. position the vehicle on a lift and remove the left and right front wheels;
2. remove both pins fastening the brake lining retaining spring with the aid of a drift and mallet;
3. remove the brake lining retaining spring;

4. remove the outer side of the brake lining;

Copyright Fiat Auto

33.

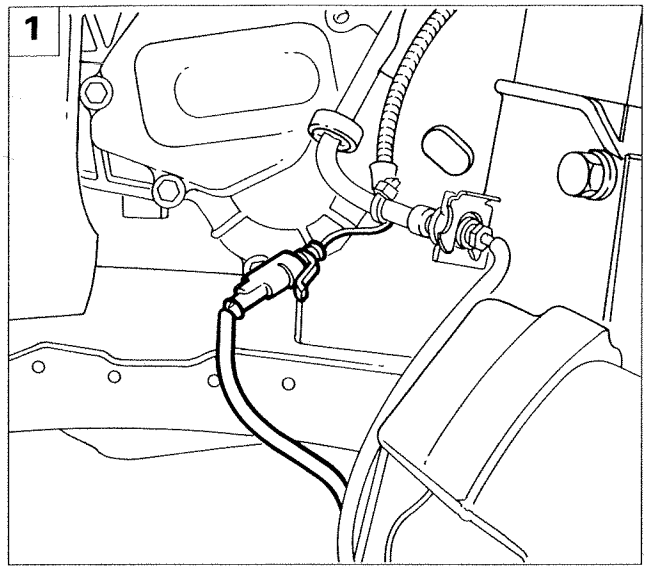

P3U02BD01

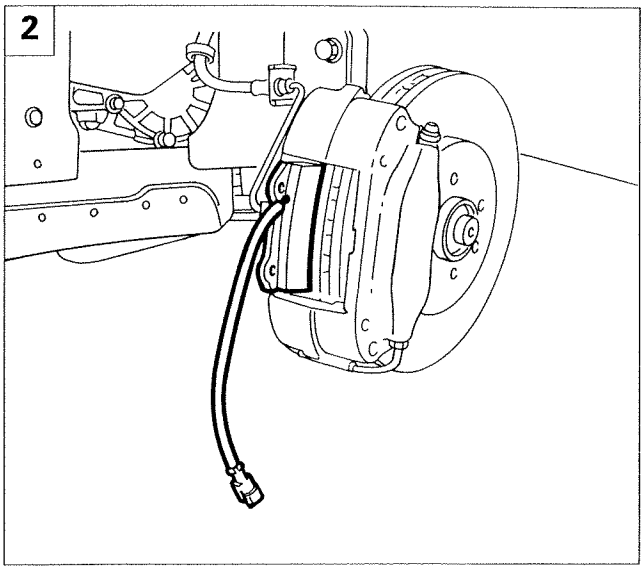

P3U02BD02

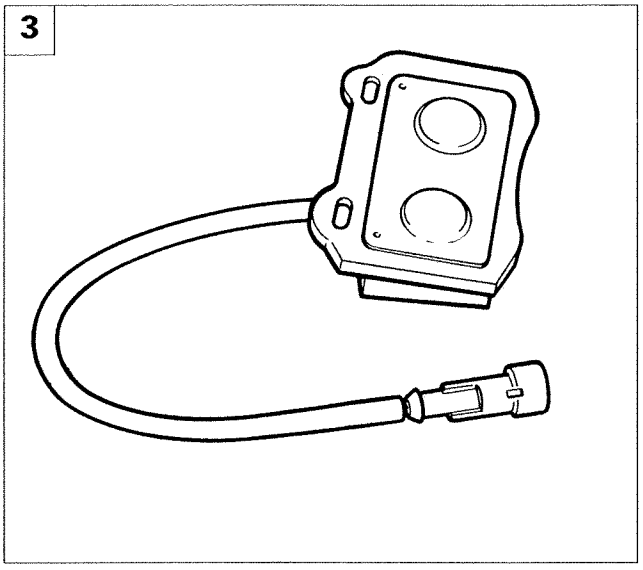

P3U02BD03

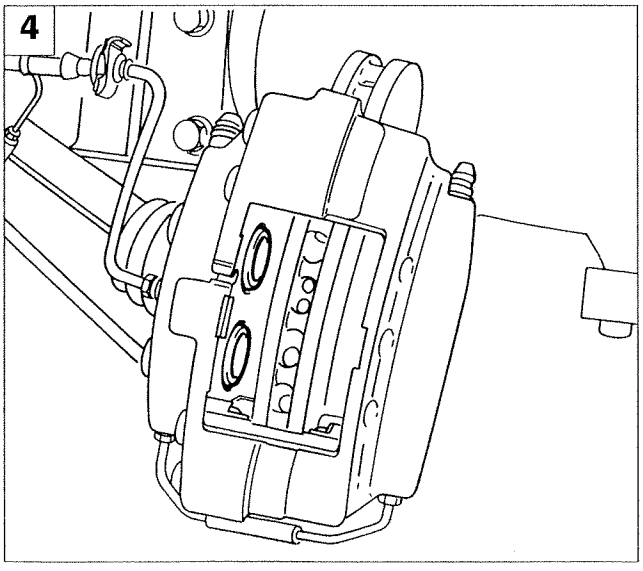

P3U02BD04

1. disconnect the brake lining wear detector connector;

NOTE *A brake lining wear detector is fitted to both front wheels.*

2. remove the inner brake lining, with the wear detector;
3. check that brake lining thickness is greater than 1.5 mm; otherwise replace the brake linings;

4. retract the four brake pistons while installed (two for each side of the brake caliper) using a wooden shaft;

1

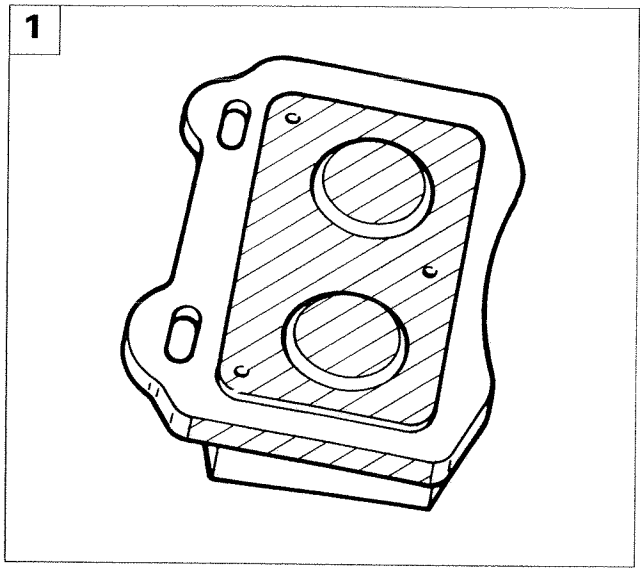

P3U03BD01

1. thoroughly clean the points where the brake linings come into contact with the brake calipers (side parts of the metal mount and sound-deadening panel surfaces);
2. use a brush or cloth to apply a light coat of MOLYCOTE CU-7439 PLUS grease to the circular areas in contact with each piston. Cover a diameter of at least 44 mm;

2

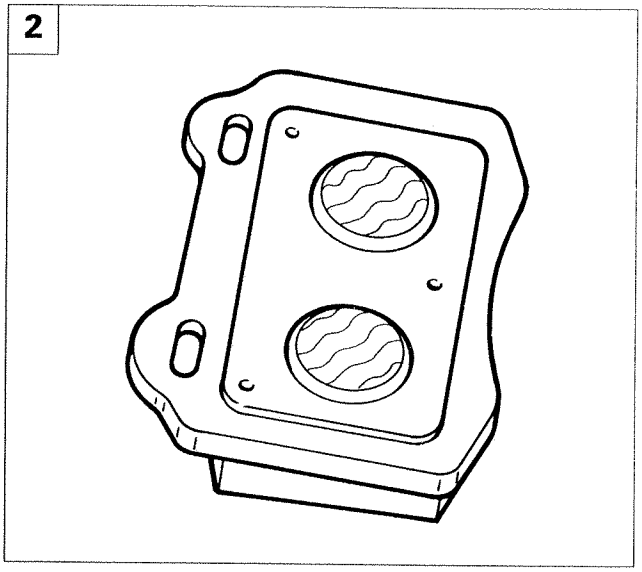

P3U03BD02

NOTE *Grease may be applied to the entire surface of the sound-deadening panel, but not to the metal support.*

3. use a brush or cloth to apply a light coat of MOLYCOTE CU-7439 PLUS grease on the side surfaces of the metal support.

NOTE *Grease may be applied to the side surfaces of the metal support, but not to the braking lining surfaces.*

NOTE *About one gram of grease must be applied to each brake lining.*

3

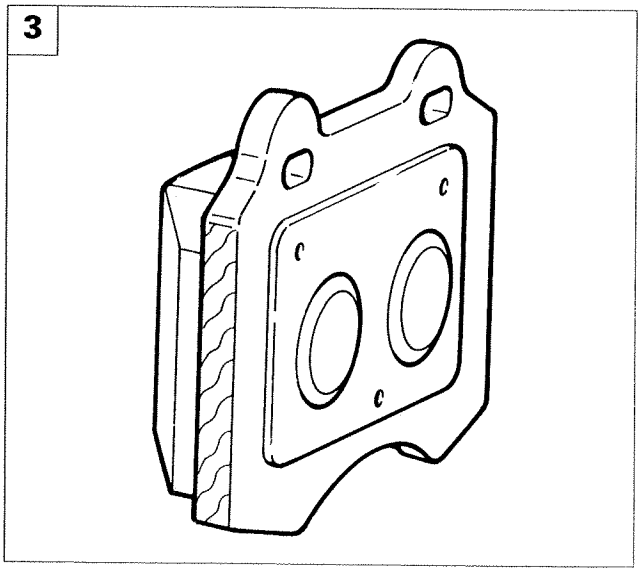

P3U03BD03

Prevent the MOLYCOTE CU-7439 PLUS grease coming into contact with your eyes.
Wash your hands thoroughly before eating, drinking or smoking.
The grease container is pressurised. Avoid exposing to to sunlight and do not heat to more than 50°C.
Do not perforate or burn the container before or after use.
Because the grease is inflammable, avoid spraying into a naked flame or into burning items.

Refit the brake linings by carrying out removal instructions in reverse order. Take particular care not to remove the grease while fitting the brake lining to the brake caliper.

Copyright Fiat Auto

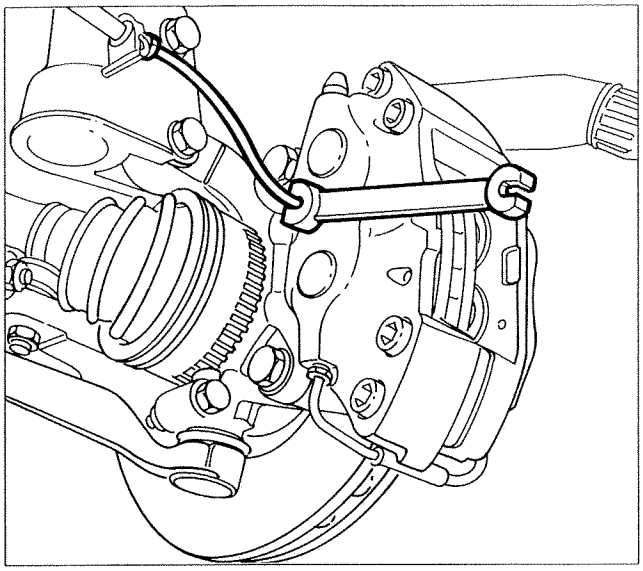

P3U04BD01

Removing-refitting brake caliper

Proceed as follows:

- use an 11 mm hexagonal wrench to unscrew the brake circuit line fitting. Collect fluid emerging from the fitting in a container and plug the fitting with adhesive tape;

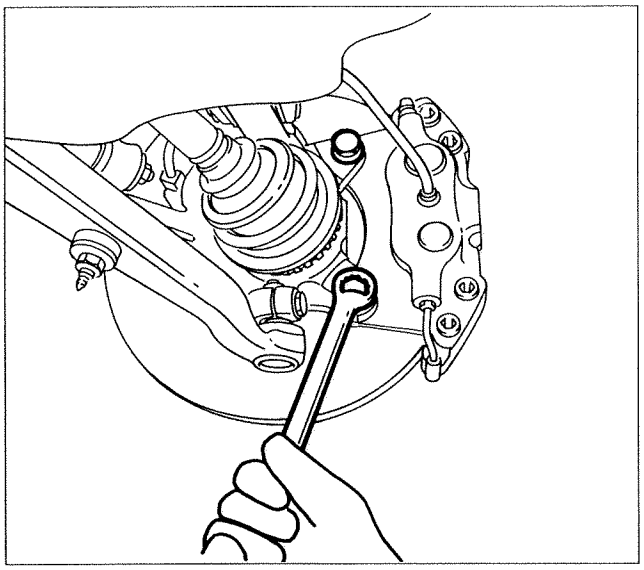

P3U04BD02

- unscrew both bolts retaining the brake caliper to the wheel hub. After replacing the brake caliper, tighten both retaining bolts to a torque of 10.5 daNm.

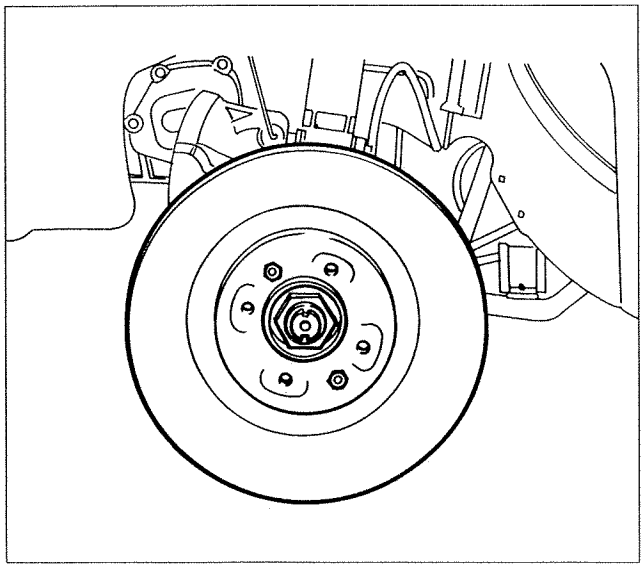

P3U04BD03

VENTILATED BRAKE DISCS

Checking and measuring disc

Ventilated disc thickness must not be less than 24.2 mm (minimum permitted wear value) and the disc should not be more than 0.15 mm off centre.

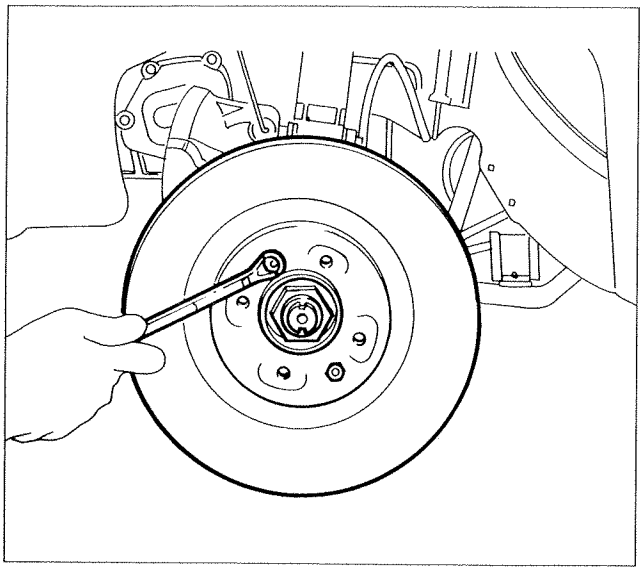

P3U05BD01

Removing-refitting

Unscrew both 12 mm hexagonal headed bolts fastening the ventilated disc. Replace the worn ventilated disc with a new one.

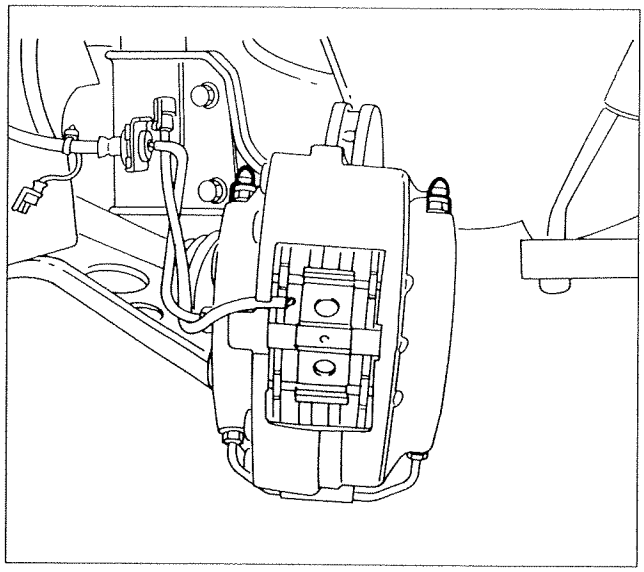

P3U05BD02

BLEEDING

Bleed through the bleed screws on both case halves of each brake caliper.

Proceed as follows:

- remove the rubber caps from both bleed screws on each brake cylinder;

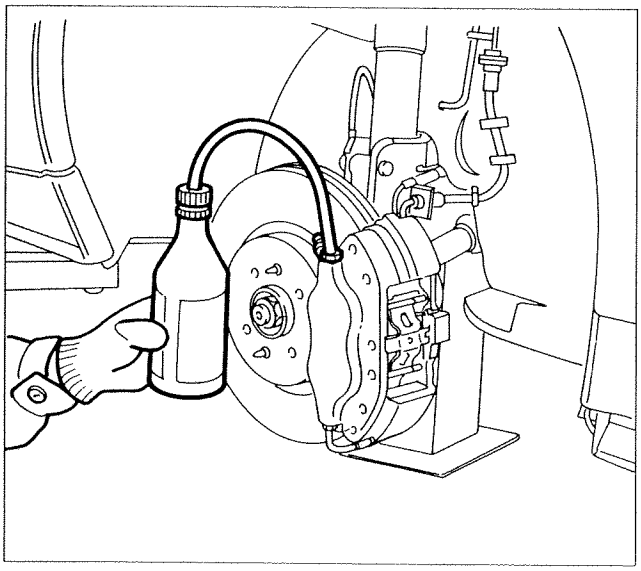

P3U05BD03

- connect the clear pipe attached to the fluid collection bottle to each bleed screw in turn.

It is advisable not to reuse recovered fluid. Top up using new brake fluid.

Copyright Fiat Auto

page

ANTI-LOCK BRAKING SYSTEM (A.B.S. Bosch 5.3)

- EBD function (Electronic Brake -force Distribution) 1
- EBD operation 2
- Active sensors 3

The following pages describe the operation of the Bosch 5.3 system with EBD function, adopted on all versions of the LANCIA k 1998 range, where the new system differs from the previous version without EBD.
For further information, refer to the Bosch 5.3 A.B.S. system described in the Lancia k, Volume 1 Workshop Manual (publication no. 506.475/08).

Copyright Fiat Auto

COPYRIGHT FIAT AUTO

The reproduction, even partial, of the text and illustrations is prohibited.

The information contained in this publication is purely indicative and could be out of date following modifications made by the Manufacturer, at any time, for technical or commercial reasons or in order to conform to legal requirements in the various countries.

Fiat Auto S.p.A.
D.M.C. - M.P.S.
Servizi Post Vendita - Tecnologie Assistenziali
Largo Senatore G.Agnelli, 5 - 10040 Volvera - To (Italia)
Publication no. 506.475/23 - Maggio 1998 - 400
Printed by Satiz S.p.A. - Turin (Italy)
order no. 60445996

EBD FUNCTION (Electronic Brake-force Distribution)

Now that a 5.3 ABS system is fitted, braking effort may be distributed between front and rear axles by means of a specific electronic control unit function.
The electronic control unit continually compares front and rear wheel speed readings obtained from speed sensors and controls the hydraulic control unit to prevent the rear wheels locking and make the most of surface grip under all load conditions.
The EBD function makes it unnecessary to use a hydraulic load proportioning valve which acts on the basis of rear axle load and this component has therefore been eliminated from the car braking circuit.
The graph below shows the way the EBD device operates (curve D) in relation to pressure in the braking system (curve A), ideal pressure to the rear axle brakes (curve B) and pressure reduction to rear axle brakes normally implemented by a conventional load-proportioning valve (curve C).

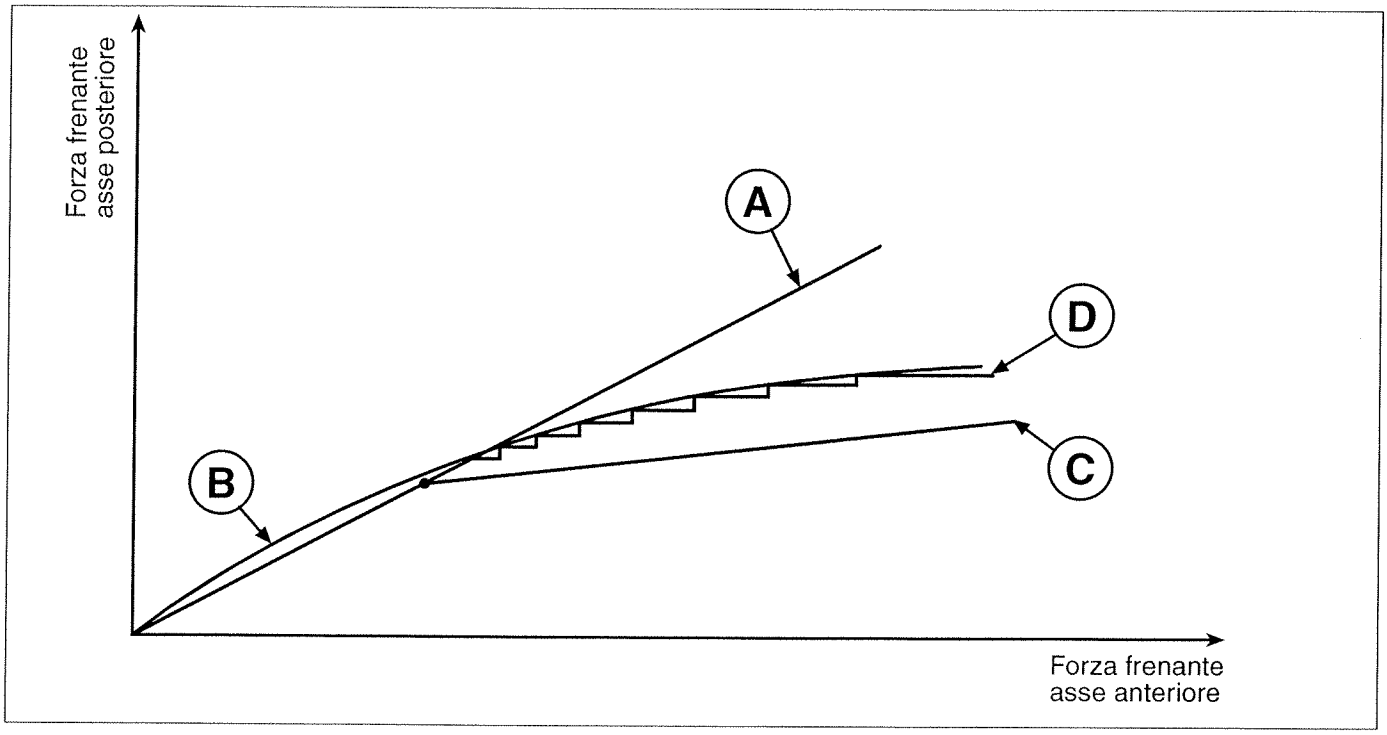

P3U19AD01

A. Distribution implemented by braking system
B. Ideal distribution
C. Distribution implemented by mechanical distributor
D. EBD control

It may be noted that the ABS system EBD function is able to adapt to the ideal pressure curve and always exploit available grip under all braking conditions.

Copyright Fiat Auto

Because the EBD function is built into the normal ABS system software, both strategies can operate simultaneously. The system normally acts to keep rear wheel slip within a practically ideal range. The ABS strategy can cut in when a rear wheel tends to lock (e.g. when the car drives over a slippery surface). The following graph shows brake pressure implementation strategy controlled by the electronic control unit on the basis of input data, i.e. a rotation speed signal received from the wheels on both axles.

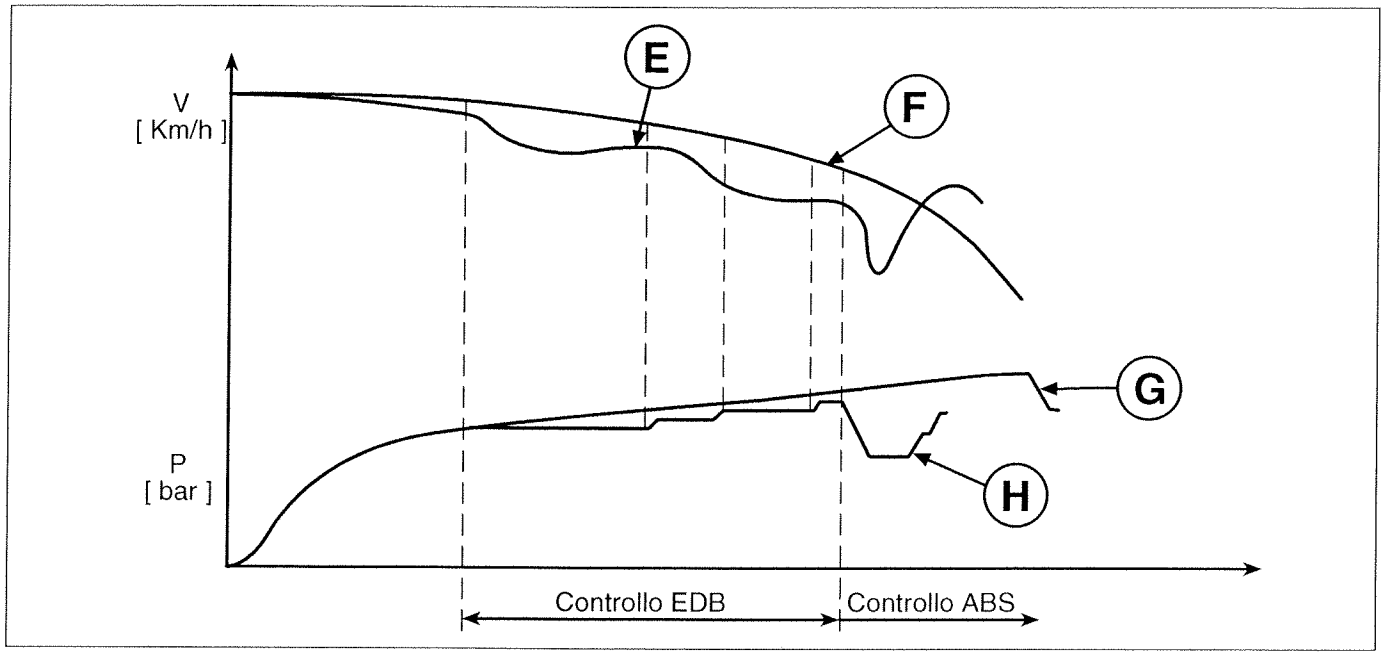

E. Rear wheel speed
F. Front wheel speed
G. Front wheel pressure
H. Rear wheel pressure

EBD OPERATION

The control unit controls rear wheel braking pressure as described for the ABS system under "Pressure maintenance stage" and "Pressure reduction stage". In this case, however, the accelerator pump is not activated and any excess hydraulic fluid is recovered by the low pressure accumulator.
Fluid returns to the delivery circuit when the brake is released.

NOTE *Simultaneous lighting up of both warning lights (ABS) when (!) the engine is running indicates a fault in the EBD system.*
Lighting up of one warning light (ABS) with the engine running normally indicates a fault in the ABS system alone. In this case, the braking system remains efficient but cannot benefit from the ABS. Under these conditions, the efficiency of the EBD system may also be reduced.

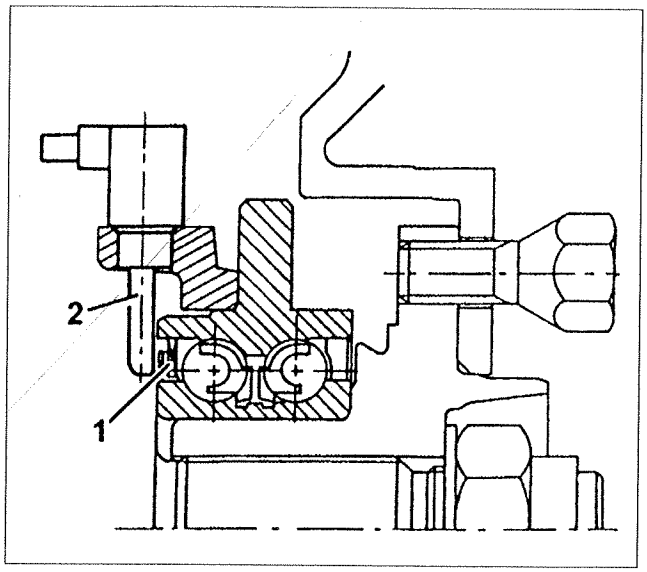

P3U21AD03

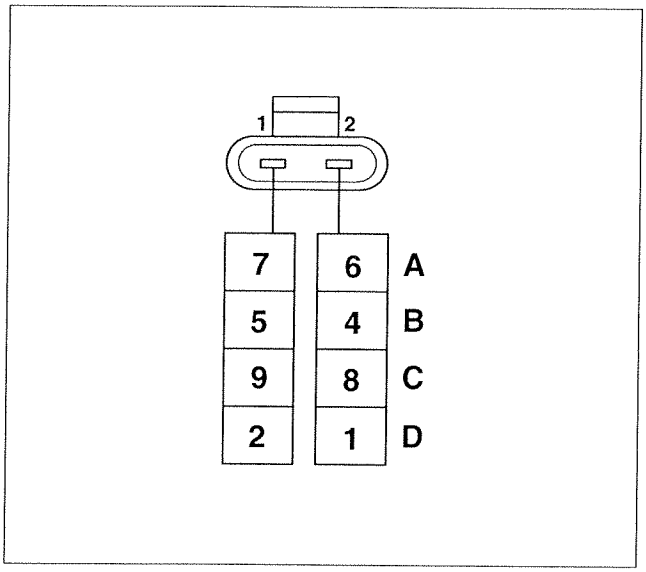

P3U21AD04

ACTIVE SENSORS

These consist of two basic elements:
- a multipolar magnetic encoder (1) built into the signal wheel hub bearing,
- a Hall-effect receiver (2) facing the encoder.

Active sensors offer the advantage of:
- reducing sensitivity to electromagnetic interference,
- protecting against interference generated by road surface heating,
- reducing weight and bulk,
- simplifying transmission couplings due to the elimination of phonic wheels.

Wiring connector

The numbers in boxes indicate the corresponding ABS control unit terminals:

A: left front wheel
B: right front wheel
C: left rear wheel
D: right rear wheel

Copyright Fiat Auto

page

VARIOUS DEVICES

RADIO-NAVIGATION SYSTEM

- Introduction 1
- Functional characteristics (radio-navigation) 2
- Functional characteristics (radio) 3
- Functional characteristics (cassette player and CD player) 4

AIR BAG SYSTEM (New contents)

- Introduction 5
- Side Bag System 6
- Passenger sensor 7
- Safety instructions to be followed during operations on vehicles equipped with Air Bag systems 8
- Preliminary instructions 8

Copyright by Fiat Auto

COPYRIGHT FIAT AUTO

The reproduction, even partial, of the text and illustrations is prohibited.

The information contained in this publication is purely indicative and could be out of date following modifications made by the Manufacturer, at any time, for technical or commercial reasons or in order to conform to legal requirements in the various countries.

Fiat Auto S.p.A.
D.M.G. - M.P.S.
Servizi Post Vendita - Tecnologie Assistenziali
Largo Senatore G.Agnelli, 5 - 10040 Volvera - To (Italia)
Publication no. 506.475/23 - Maggio 1998 - 400
Printed by Satiz S.p.A. - Turin (Italy)
order no. 60445996

RADIO-NAVIGATION SYSTEM

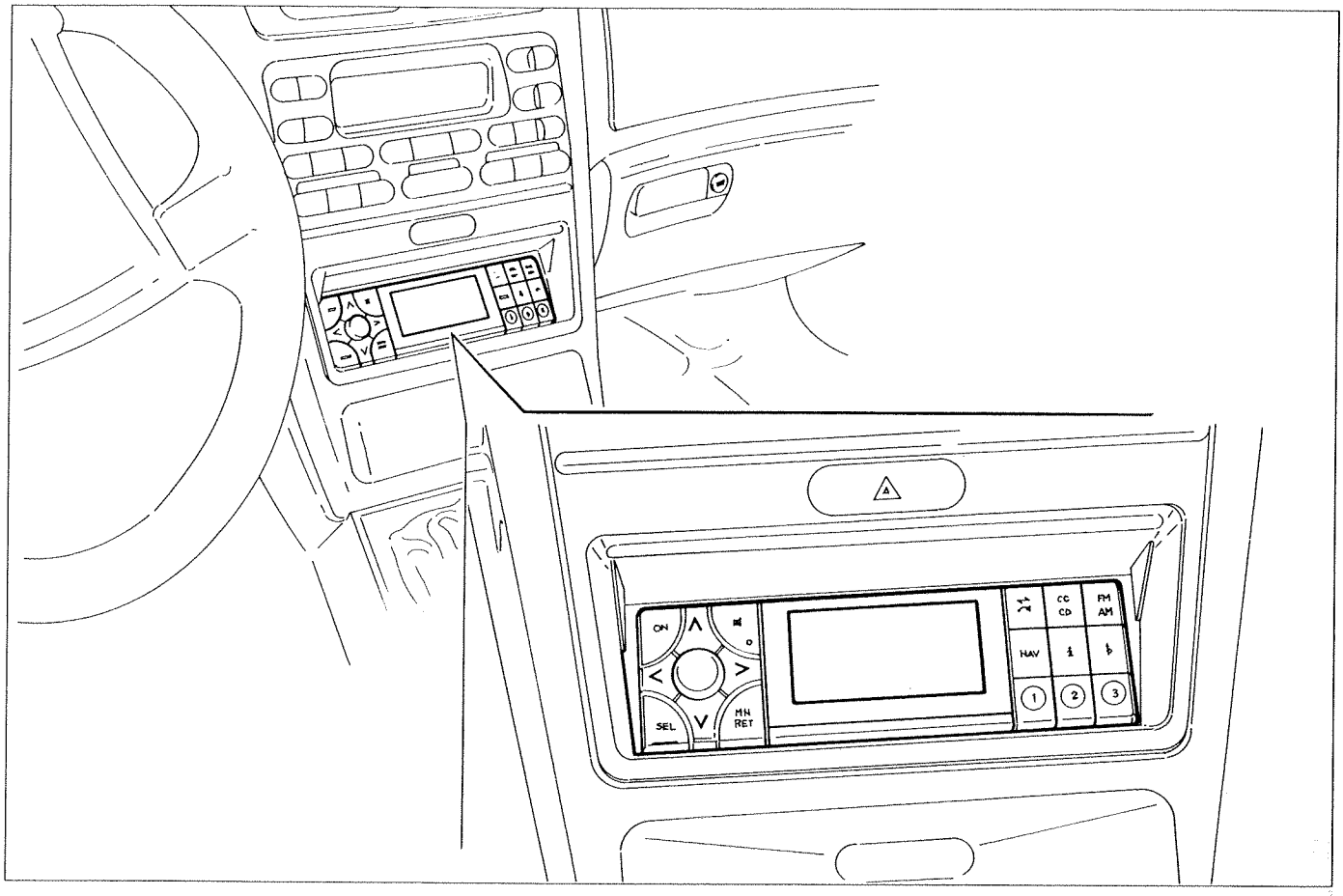

P3U01NL01

Introduction

A mobile radio-navigation system known as the BOSCH RADIO NAVIGATION SYSTEM 2 (R.N.S.2) which is integrated in a regular radio, is fitted on the LANCIA k 98.
By means of the G.P.S. (Global Positioning System) which uses satellites put into orbit about ten years ago, the system manages to identify the position of an object on the ground (car, ship, plane) with great precision.
The G.P.S. uses 21 satellites plus 3 spares; in order to determine the exact position of a vehicle on the ground it must simultaneously receive signals from at least 4 satellites with the precision varying from between 300 to 20m.
The signals sent by the satellites must be combined with a good map read by a CD ROM in the vehicle; to go from point A to point B the micro-processes, inside the navigation system, must know how to recognize the exact position in the area, but could never indicate turnings, intersections and distances unless it knows the roads connecting points A and B perfectly.
This is the most important difference between systems for cars and those which are much more widely available and economical for air or sea navigation; the latter provide the course, i.e. the shortest distance between two points, whilst in a car it is necessary to establish an actual route:
- far more winding than a straight line;
- there may be more than one possible route;
- it is subject to precise rules set by the highway code.

The system comprises the following components:
- RADIO EQUIPMENT with 2 FM tuners, 1 AM tuner, cassette player, CD change (opt.), high power output, display and multi-lingual auditory route instructions (6 languages: Italian, English, French, Spanish and Dutch).
- NAVIGATION EQUIPMENT with 8 channel G.P.S. reciver, internal gyroscope, CD ROM player and processor; these components are fitted in the luggage compartment.
- High power G.P.S. AERIAL, small in size, located on the roof of the vehicle.

Copyright by Fiat Auto

Functional characteristics (radio-navigation)

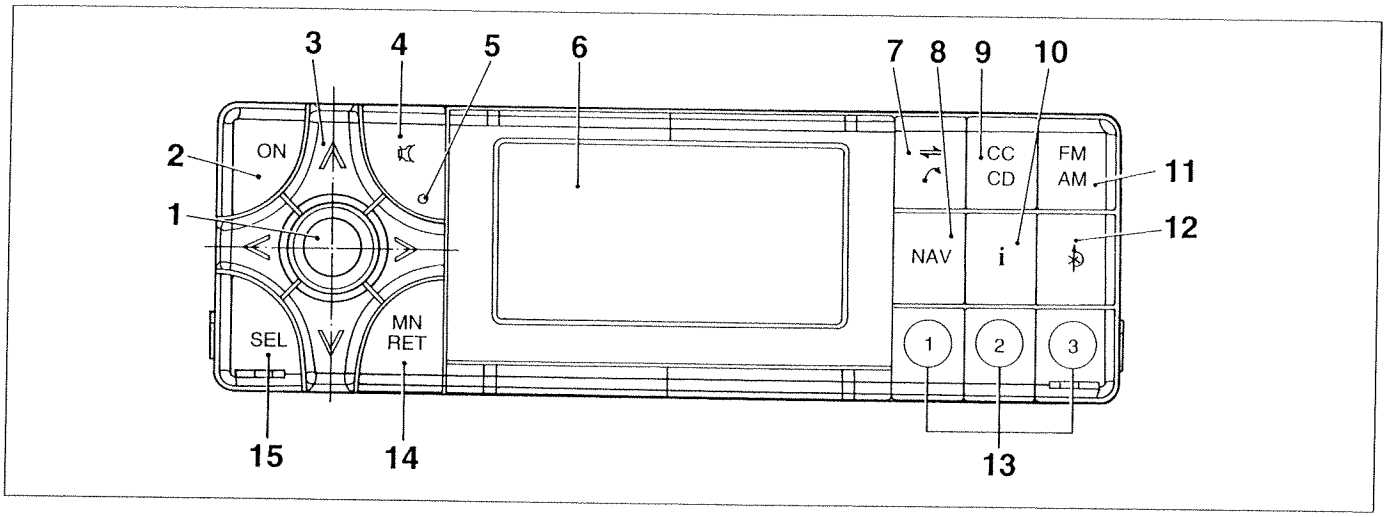

P3U02NL01

1. Knob with switch incorporated
Knob for adjusting volume of voice road directions
If pressed briefly: Repitition of the vocal road directions; confirmation of the data memorized

If pressed for longer: Confirmation of input

2. Switch [ON]
Activation/deactivation of R.N.S. 2 [<] [>] [v] [^]

3. Multi-purpose switch
Selection of input menu letters; selection of data memorized on the list; manual setting of exact time

4. Switch
If pressed briefly: Cancellation of the vocal road directions during any traffice communications

If pressed for longer: Cancellation of all subsequent traffic communications

5. Warning light
Signalling of deactivation of vocal road directions

6. Display

8. Switch [NAV]
Switching from radio-navigator to radio; momentary half to radio-navigation

10. Switch [i]
Repitition of the vocal road directions; recall of INFO menu

12. Switch
Recall of initial state menu; if the name of the destination town/road is being emitted it allows the direct acceptance of the letters in the input menu

14. Switch [MN RET]
Return to the previous page on the menu

15. Switch [SEL]
Switch for preselecting low tones, high tones, fader and balance; press briefly
If pressed for longer: Setting of intermediate position for sound and volume functions

Functional characteristics (radio)

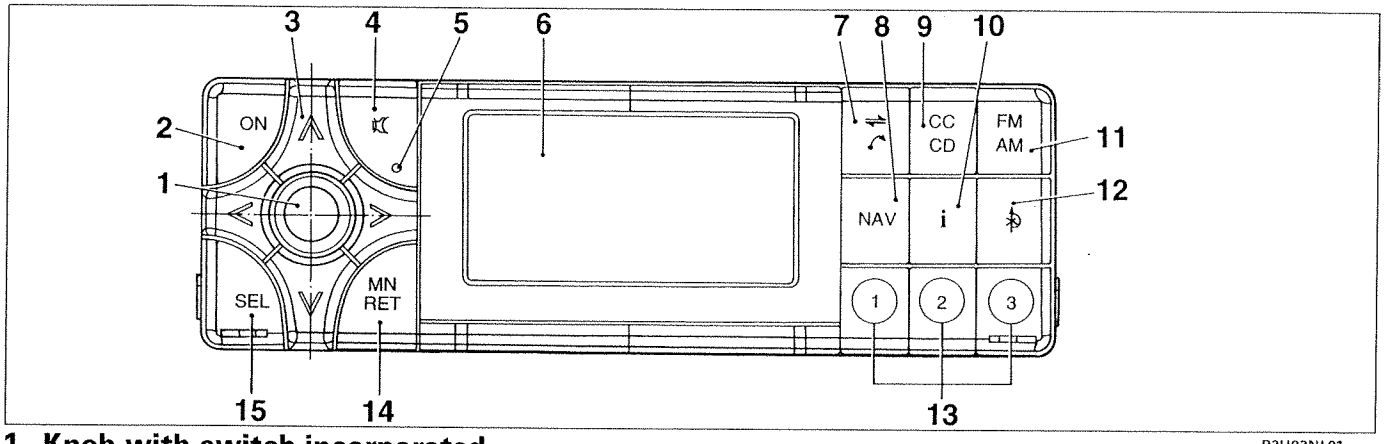

P3U02NL01

1. Knob with switch incorporated
Knob for adjusting volume, low tones*, high tones*, fader* and balance*
(* first press the switch [SEL] the number of times required to select the function involved);

Press briefly to confirm the adjustment of the function

2. Switch [ON]
Activation/deactivation of R.N.S. 2

3. Multi-purpose switch [<] [>] [v] [^]
[<] [>]
Switch for searching for stations: automatically and manually; activation/deactivation of RDS functions and regional monintoring

[^] [^]
Recall of stations programmed; selection of stations programmed in the list
If pressed for longer: The Scan function is activated

4. Switch [⊗]
Activation/deactivation of interruption for traffic news (TA)

5. Warning light
Signalling of deactivation with interruption for traffic news (TA)

6. Display

10. Switch [i]
If pressed briefly: The current position appears on the display, with the R.N.S. 2 de-activated
If pressed for longer: The road currently being driven along appears on the display constantly, in the basic menu with the R.N.S. 2 de-activated

11. Switch [FM AM]
Setting of the FM, OM and OL wavelengths; press briefly
If pressed for longer: activation/deactivation of interruption for traffic news (TA)

13. Switch [1] [2] [3]
If pressed briefly: Direct recall of stations programmed for the first, second or third memory position

If pressed for longer: Direct programming of station for the first, second or third memory position

14. Switch [MN RET]
Selection of positions in basic menu; return to previous menu

15. Switch [SEL]
Switch for pre-selecting low tones, high tones, fader and balance; press briefly
If pressed for longer: Setting of intermediate position for sound and volume functions

Copyright by Fiat Auto

Functional characteristics (cassette player and CD player)

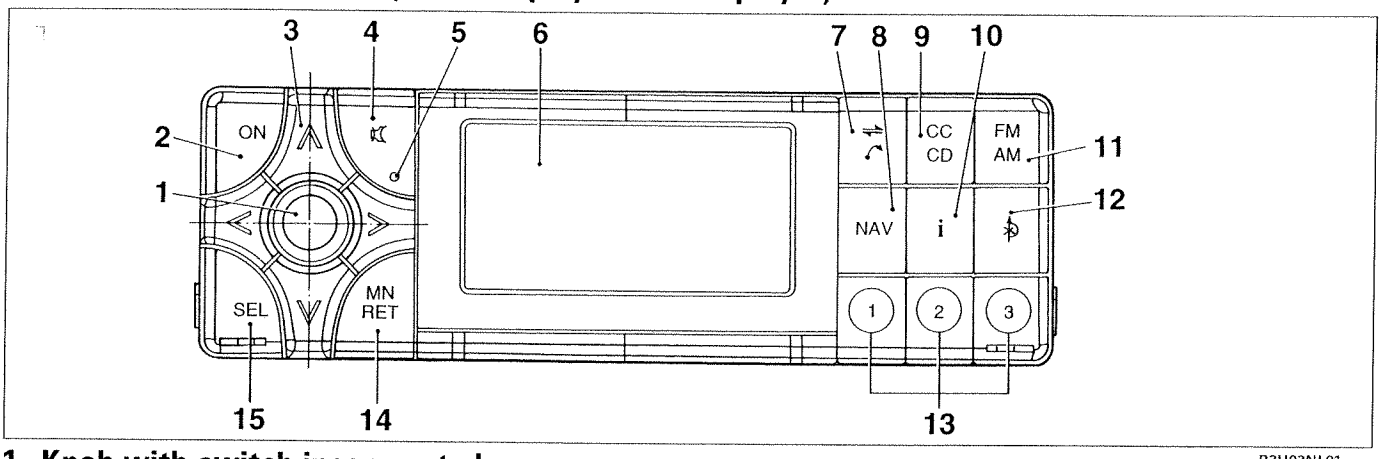

P3U02NL01

1. Knob with switch incorporated
Knob for adjusting volume, low tones*, high tones*, fader* and balance*
(* first press the switch [SEL] the number of times required to select the function involved);
Press briefly to confirm the adjustment of the function

2. Switch
Activation/deactivation of R.N.S. 2

3. Multi-purpose switch [<] [>] [^] [v]
[<] [>]
Cassette player: Track search - forwards/backwards; switching on/off Dolby-B and Skip Blank
CD: Press briefly: Skip track - forwards/backwards; switching on/off of random and repeat functions

Press for longer: Fast forward/rewind
[^] [v]
Cassette: Fast forward/rewind
CD: CD selection
[^]
Press for longer: Scan function activated

4. Switch [⊗]
Activation/deactivation of interruption for traffic news (TA)

5. Warning light
Signalling of deactivation of interruption for traffic news (TA)

6. Display

7. Switch [⇌]
Switching on and ejection of cassette; autoreverse function

9. Switch [CC CD]
Switching when listening to cassette or CD

10. Switch [i]
If pressed briefly: The current position will appear briefly on the display with the R.N.S. 2 de-activated

If pressed for longer: The road currently being driven along will appear constantly on the display, in the basic menu with the R.N.S. 2 de-activated

11. Switch [FM AM]
If pressed for longer: activation/deactivation of interruption for traffic news (TA)

AIR BAG SYSTEM (New contents)

Introduction

An Air Bag system is fitted on the LANCIA k 98 range which varies from the previous system through the following features:

- protection against side impacts known as a Side Bag;
- passenger sensor on the seat;

Location on vehicle of new Air Bag system components complete with Side Bag

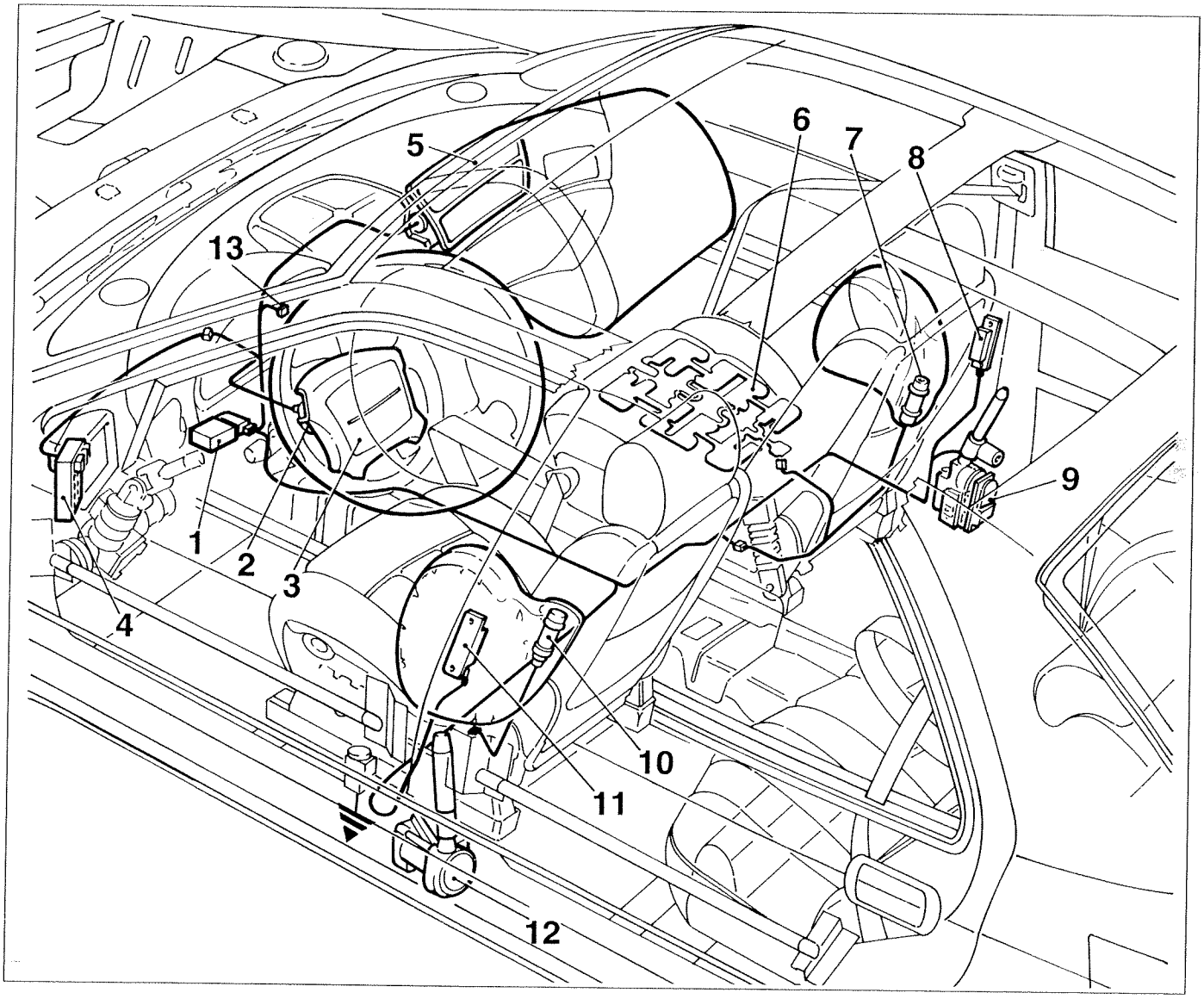

P3U05NL01

1. Air bag control unit
2. Clock spring
3. Driver's Air Bag module
4. Junction unit
5. Passenger Air Bag module
6. Passenger sensor
7. Passenger Side Bag module
8. Passenger deceleration "satellite" sensor
9. Passenger side pre-tensioner
10. Driver's Side Bag module
11. Driver's deceleration "satellite" sensor
12. Driver's pre-tensioner
13. Air Bag system failure warning light

Copyright by Fiat Auto

55.

SIDE BAG SYSTEM

A system known as the Side Bag has been developed to improve protection against side impacts; it involves side Air Bag modules fitted on the outer side of the seat backrests.
There is also a sensor fitted on the passenger seat capable of detecting the presence of a passenger on the actual seat cusion.
The Side Bag modules fitted on the seat backrests are made up of the following main elements:
- a bag, made from a permeable fabric with a volume of around 12 litres, capable of protecting the occupant's chest and stomach, on the seat facing the outside of the vehicle;
- a metal casing containing a minimal pyrotechnic charge which, activated by an electric signal, releases the gas (argon) to inflate the bag, stored under pressure inside the container;
- an extremely light and flexible plastic cover which guarantees the necessary dimensions;
- fixing brackets.

There are warning plates on the Side Bag module cover which must be adhered to.

The modules are fitted under the backrest cover so that the seat is not significantly different in appearance. By the module, the stitching on the seat backrest is designed to open without tearing and without letting the bag inflate unless it is supposed to.

Side Bag Module

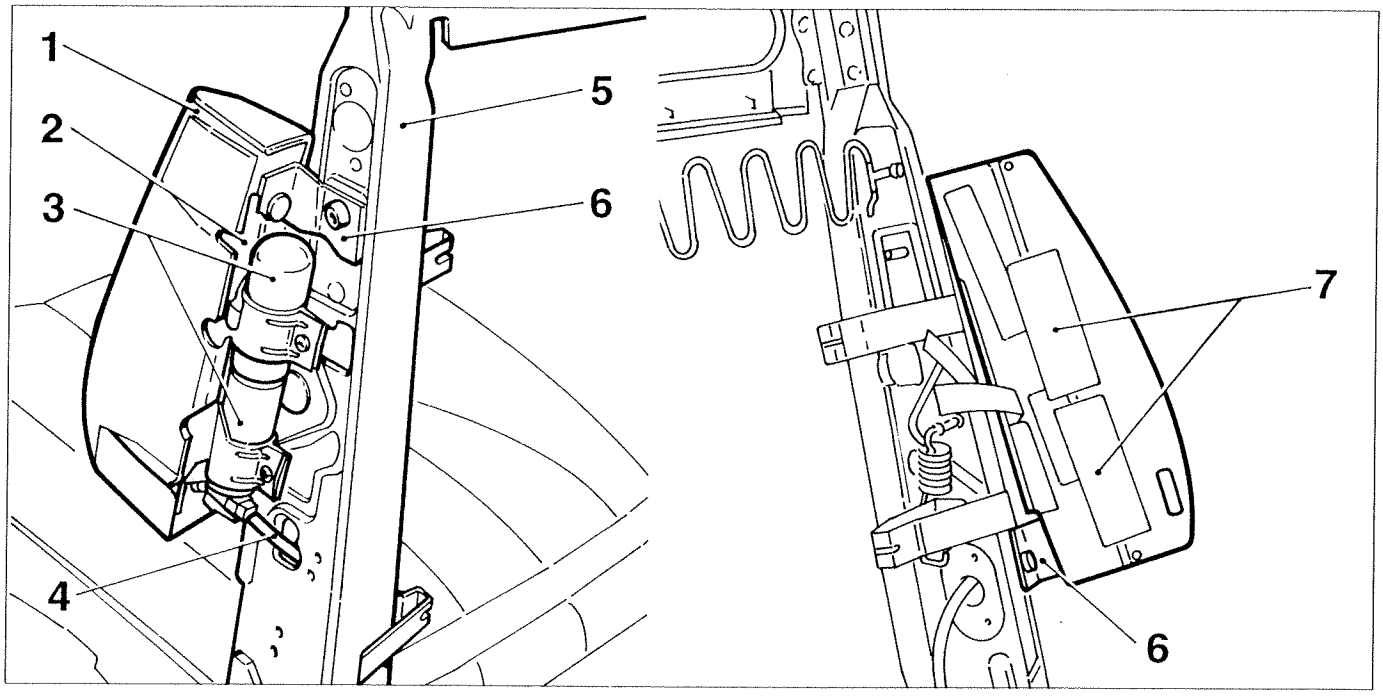

P3U06NL01

1. Plastic cover
2. Bag
3. Metal casing
4. Electrical activation cable
5. Backrest structure
6. Fixing brackets
7. Warning plates

In addition to the actual module, the side protection system is also made up of an electronic control unit which allows correct operation. There are, in fact, two satellite sensors fixed on the vehicle pillars. These satellite sensors contain an accelerometer capable of measuring the accelerations which occur during a side impact. If the impact exceeds a certain intensity, this information is transferred from the satellite sensor involved to the main Air Bag system control unit which compares this information with that obtained from a second internal accelerometer, ensuring the safety function.

If the information from the accelerometers, measured by the satellite sensor and the control unit sensor, tallies, the main control unit controls the operation of the Side Bag module on the side affected by the impact.
As for front Air Bags, for side Air Bags too, the control unit is calibrated according to pre-set activation thresholds which ensure that the modules are only activated in impacts where additional protection to the front seats is appropriate, distinguishing them from situations where such intervention is not necessary (low energy side impacts, slamming of doors, knocks against the side panels not caused by other vehicles).

PASSENGER SENSOR

The adoption of a passenger sensor makes it possible to avoid the activatation of the the passenger front and side Air Bag modules (where fitted) unless it is necessary.

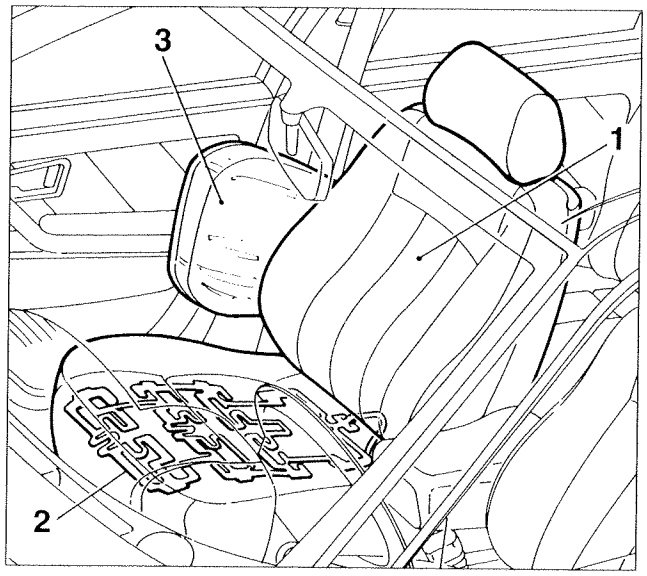

P3U07NL01

1. Passenger seat
2. Passenger sensor
3. Side Bag inflated

The passenger sensor is a device which is capable of identifying whether there is a weight on the seat cushion and transmitting the appropriate weight information to the electronic control unit which manages the system to which it is electrically connected by means of the Air Bag wiring.
If there is no passenger in the front, the control unit disables the front and side Air Bags (where fitted) and the passenger side pre-tensioner.
This allows a considerable reduction in repair costs in the case of an accident where the passenger systems would be activated when they are not required, IF THERE IS NO ACTUAL PASSENGER PRESENT.
The sensor is made from thin, flexible laminated plastic and contains an electric printed circuit which determines its operation. The sensor is fitted in the seat between the upholstery and the cover, without altering the functional, aesthetic and ergonomic features, covering the entire area of the seat with the exception of the two side panels.
The occupation of the seat is therefore detected even if the passenger is sitting incorrectly and irrespective of whether or not the seat belt is worn. The sensor has also been designed to be compatible with the seat heater, if fitted.
The system is calibrated to ensure that in all operating conditions (from 35 to +85°C) it can detect a load equal to a weight of 12 kg. For lesser weights, the response depends on the operating conditions (temperature, morphology and position of the weight), type of cover, whether or not a heater is present).
The control unit is programmed to instantly reactivate the Air Bag activation circuits if the seat is occupied once again after no passenger was previously present, whilst the Air Bag is only disabled after a continuous absence of 30 seconds.

Copyright by Fiat Auto

Like the other Air Bag system components, the passenger sensor and wiring are constantly checked whilst the vehicle is in use. The fault diagnosis involves checking the short circuit and open circuit conditions. In the case of a malfunction of the sensor, its messages are ignored and the system behaves like a conventional system keeping the passenger Air Bag and pre-tensioner constantly activated. At the same time the red failure warning light comes on.

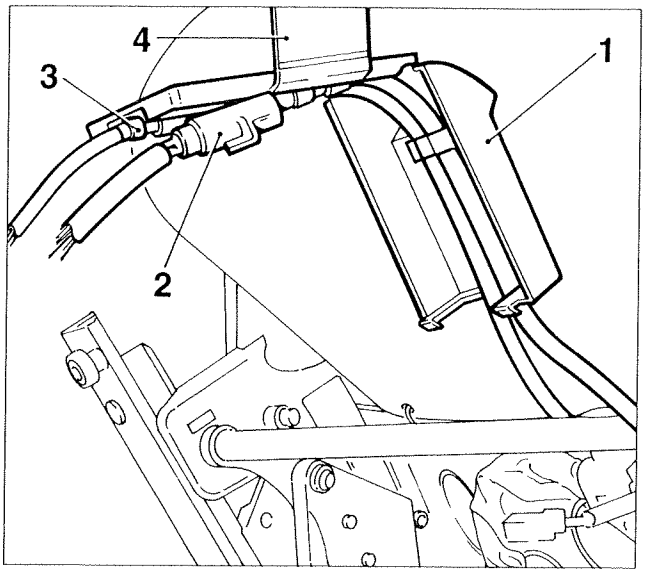

P3U08NL01

Location of electrical connections on seat with Side Bag

1. Casing containing connections
2. Side Bag module connection
3. Passenger sensor connection
4. Cover opening tab

The points connected to the electrical equipment (cables with yellow outer casing) for the Side Bag module and the passenger sensor are positioned at the base of the seat, in the front section, inside a casing which acts as a shield. To gain access to the connections, open the cover acting on the opening tab.
If the seat is being removed, it is necessary to:

- Remove the key from the ignition.
- Always disconnect the battery, i.e.: disconnect the two terminals from the poles and insulate them carefully.
- Disconnect the electrical connection for the control unit AT LEAST 10 MINUTES after having disconnected the battery.

NOTE *In order to remove front seats with Side Bags, after having disconnected the above mentioned connections, follow the procedure described in section 70 - Bodywork in the "LANCIA k" Service Manual.*

Each time operations are carried out to the Air Bag system, the operation of the actual system MUST be checked using the appropriate diagnostic equipment.

The operations of checking and handling the seats must be carried out SCRUPULOUSLY FOLLOWING the safety instructions given below.

SAFETY INSTRUCTIONS TO BE OBSERVED DURING OPERATIONS ON VEHICLES EQUIPPED WITH AIR BAG SYSTEMS

The following instructions MUST BE FOLLOWED any time an operation is carried out on a vehicle equipped with an Air Bag system.
The Air Bag system components must ONLY be removed and refitted by authorized, trained personnel.

The failure to follow these instructions could lead to undesired activations of the system, personal injury or unnecessary repairs to the system.

PRELIMINARY INSTRUCTIONS

It should be remembered that the Air Bag system components are devices which should be handled with care.
Their use, transportation and storage are governed by the procedures for the handling of such components described in section 55 - Electrical equipment of the "LANCIA k" Service Manual.
These instructions also extend to the Side Bag system components.

page

- Electrical symbols 1
- Explanation of how to read the wiring diagrams 4
- Wiring diagrams 5
- Key 71

Copyright by Fiat Auto

COPYRIGHT FIAT AUTO

The reproduction, even partial, of the text and illustrations is prohibited.

The information contained in this publication is purely indicative and could be out of date following modifications made by the Manufacturer, at any time, for technical or commercial reasons or in order to conform to legal requirements in the various countries.

Fiat Auto S.p.A.
D.M.C. - M.P.S.
Servizi Post Vendita - Tecnologie Assistenziali
Largo Senatore G.Agnelli, 5 - 10040 Volvera - To (Italia)
Publication no. 506.475/23 - Maggio 1998 - 400
Printed by Satiz S.p.A. - Turin (Italy)
order no. 60445996

SERVICE FUNCTION

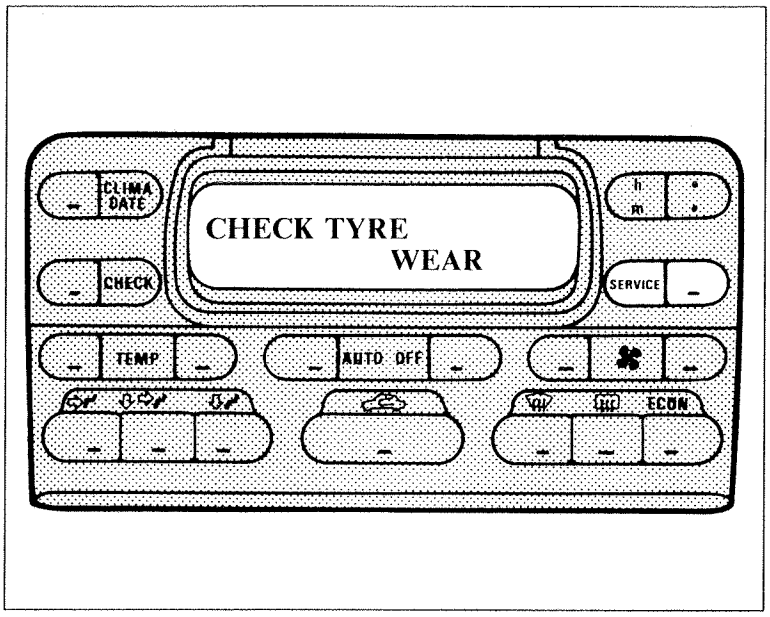

P3U79CL01

The "SERVICE" function is recalled by pressing the key shown in the figure; this function uses the Infocenter module's logic and the signal from the speedometer sensor, obtained from the instrument panel.
To obtain messages on the display, the ignition must be on (+15) or the car must be running.

When the "SERVICE" key is pressed, the message: "CHECK TYRE WEAR" is displayed.
When the key is pressed again within no more than 8 seconds, further information is displayed; if the key is held pressed down, the messages are displayed cyclically (3 seconds for each message).

If during reading of the "SERVICE" function, faults occur on the functions checked by the "CHECK", the fault messages prevail over the "SERVICE" messages.

Displayed messages:

- check tyre wear;
- front tyres min 2.2 - max 2.3 bar;
- rear tyres min 2.2 - max 2.3 bar;
- routine maintenance every 15000 km;
- SELENIA SAE 10W40 engine oil - SELENIA TURBO DIESEL engine oil;
- oil change every 15000 km - oil change every km (diesel versions only);
- replace engine oil filter every 15000 km;
- replace fuel filter every 60000 km - replace fuel filter every 30000 km (diesel versions only);
- replace air cleaner every 30000 km - replace air cleaner every 15000 km (diesel versions only);
- replace spark plugs every 30000 km;
- check emissions every 15000 km;
- replace anti-pollen filter every 12 months;
- replace windscreen wiper blades every 12 months;
- TUTELA TOP4 brake fluid;
- PARAFLU' FIAT engine coolant;
- replace brake fluid every 24 months;
- further information see booklet.

Copyright Fiat Auto

55.

The Infocenter module counts backwards every 500 km; when the count reaches 1000 km, it continues in 100 km decrements.
When 0 km is reached, a message is displayed indicating the necessary replacement.
To reset the counting to the initial state, simply press the "h" or "m" keys with a pencil tip while remaining in the SERVICE function and in the replacement carried out.
As regards the month counting, the principle is the same. The Infocenter module counts from month to month until the message relating to the necessary replacement is displayed.

Display Service

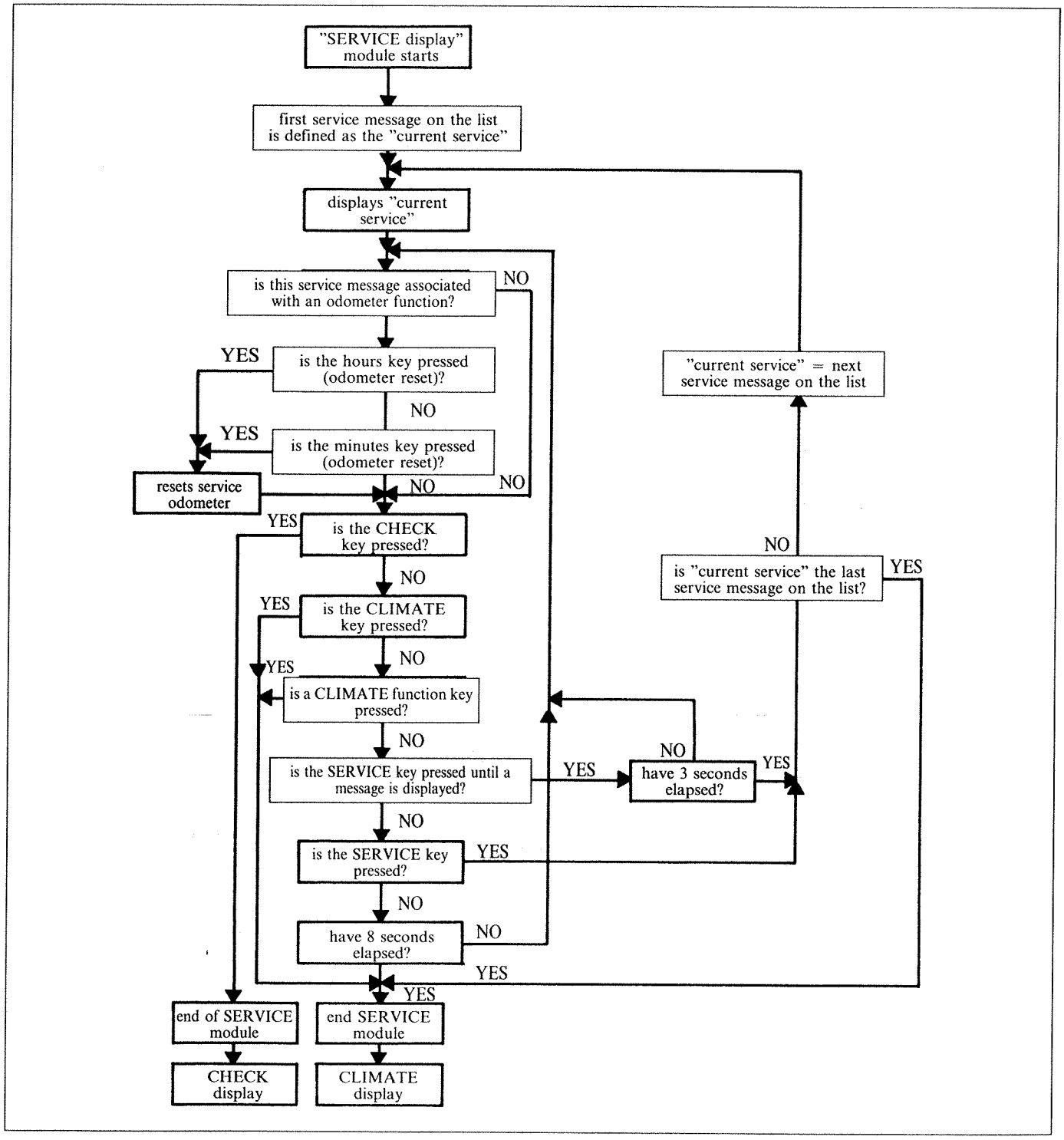

P3U80CL01

INTRODUCTION

The electronic key system (immobilizer) comprises:
- four electronic keys containing a secret code;
- an electronic key control unit and external aerial;
- the fuel injection control unit (for petrol engines and diesel electronic pumps) with a serial line which manages communication to the electronic key control unit;
- card with secret code for the emergency procedure.

The electronic key system enables the operation of the electronic fuel injection control unit by means of an exchange of codes.
When the ignition is ON (+15), the fuel injection control unit sends a code request to the electronic key control unit, which replies and sends a secret code but only after recognizing (by aerial) a known electronic key inserted in the ignition switch.
Once it has recognized the code, the fuel injection control unit commences electronic management of the engine.
The electronic fuel injection control unit can only memorize the secret code by means of a particular procedure.

The functions of the electronic key control unit are:
- to recognize the introduction and rotation of a key in the ignition switch;
- to emit an electromagnetic field to give power to and activate the key's transponder (code emitter);
- to receive the secret code issued by the key;
- to memorize a maximum of 8 keys with as many secret codes;
- to manage checks/processing of the codes;
- to manage a single-wire bidirectional serial communication with the fuel injection control unit;
- to manage a diagnosis warning light (LED) located at the centre of the dashboard.

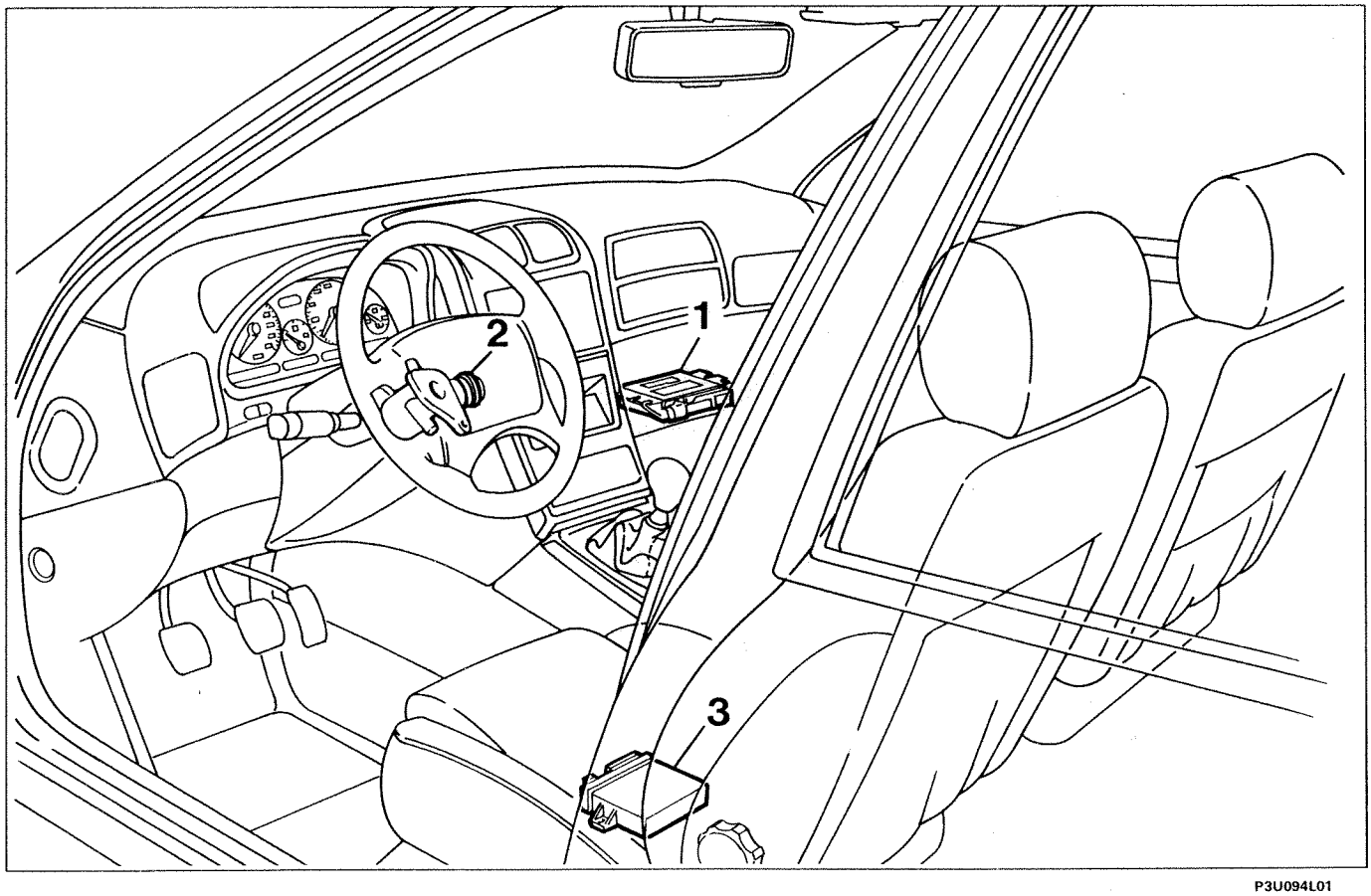

P3U094L01

1. Injection control unit
2. Ignition switch with aerial
3. Electronic key control unit

Copyright Fiat Auto

Electronic key system

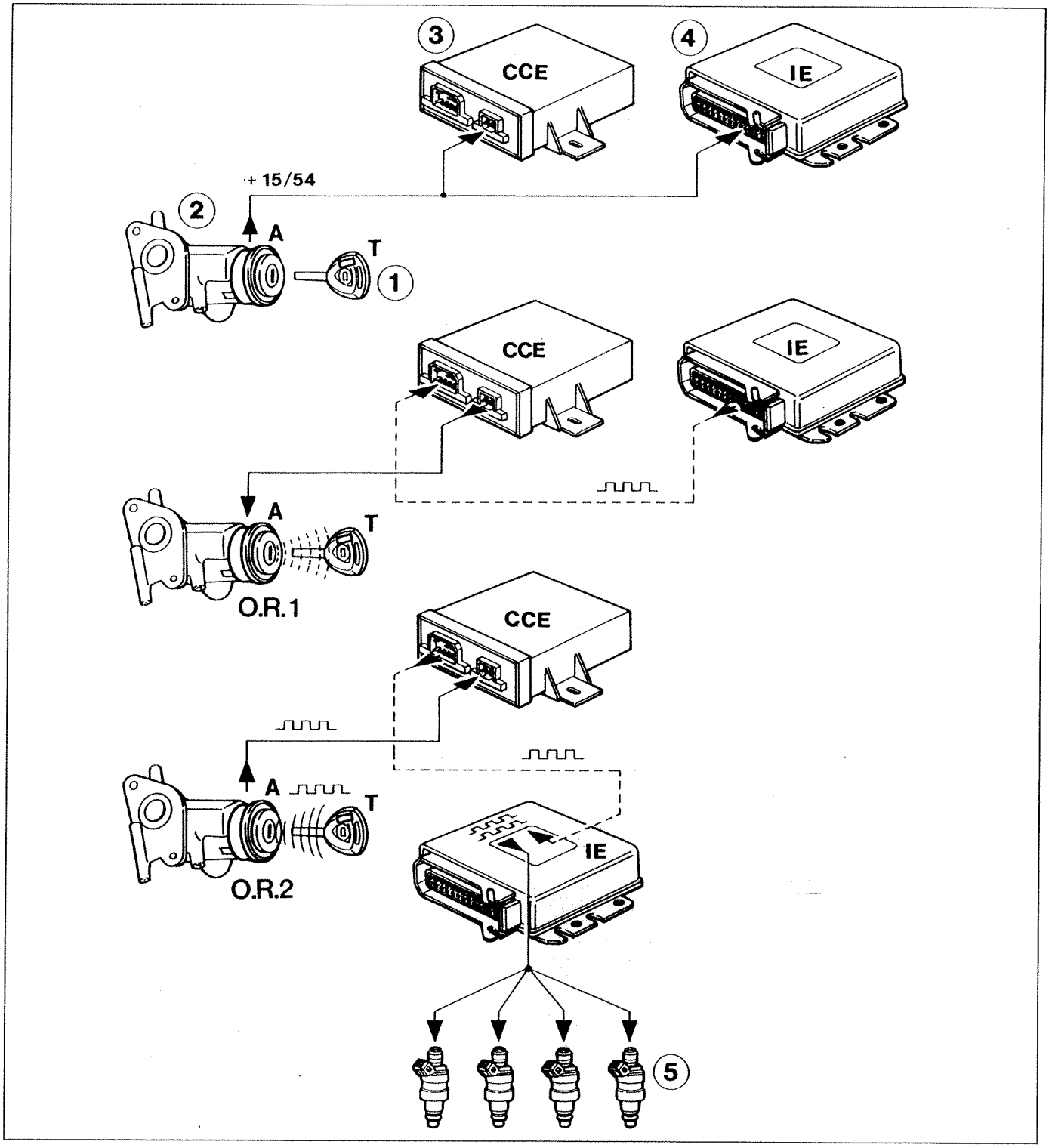

1. Key with the transponder T (code emitter for engine starting)
2. Ignition switch with built-in A aerial
3. Electronic key control unit (CCE)
4. Fuel injection control unit (IE)
5. Fuel injectors

O.R.1 Radio waves for activating the transponder
O.R.2 Radio waves for sending the key's secret code

DESCRIPTION OF THE SYSTEM

Electronic fuel injection control unit

The electronic fuel injection control unit is the fundamental component of the electronic key system since it contains the main code (Master Code).
When the ignition is switched ON (+ 15), the electronic fuel injection control unit requests a code from the electronic key control unit; after receiving the code, it compares it with the master code stored in memory. If the comparison of the codes gives a positive result, the fuel injection control unit permits the operation and management of the engine.
If the electronic key control unit is faulty, the fuel injection control unit manages the emergency start-up procedure with the Fiat Lancia Tester.



On no account may fuel injection control units be exchanged between cars in order to check their efficiency.



During fault diagnosis, before replacing the fuel injection control unit, make sure that the component in question really is faulty, since when the new fuel injection control unit is supplied, the master code is memorized, making that control unit totally unuseable on other cars.

Electronic key control unit

The electronic key control unit is located under the driver's seat, and its main function is to recognize the keys inserted in the ignition switch.
On request from the fuel injection control unit, the electronic key control unit sends the following:
- the master code, enabling operation and management of the engine;
- the fault diagnosis code (key not recognized), preventing engine operation.

The electronic key control unit also:
- manages the memorization or re-memorization of keys;
- memorizes the master code in the fuel injection control unit (at the request of the fuel injection control unit);
- manages the electronic key system's green warning light (LED).

There are two procedures for dialogue between the electronic key control unit and the fuel injection control unit:

1. after the electronic key control unit has memorized the keys, its starts dialogue with the as yet BRAND-NEW fuel injection control unit. The information exchange (recording of the code) between the fuel injection control unit and electronic key control unit is guided only by the fuel injection control unit; the electronic key control unit is only enabled to answer interrogations from the fuel injection control unit;
2. code checking is a standard procedure which is repeated whenever the user inserts the electronic key in the ignition switch block and turns it to the ON position (+ 15); the checking procedure also continues when the user moves the key to the START position (+ 50).

With the key in the ON position (+ 15), the electronic key control unit must recognize the electronic key with its relevant code; there will be two possibilities:
- code recognition by the electronic key control unit; the fuel injection control unit enables engine operation (the green LED goes out);
- if the code recognition is negative, the electronic key control unit sends a code to the fuel injection control unit which will not permit engine operation (the green LED is on permanently).

Copyright Fiat Auto

Perspective view of the electronic key control unit and relevant connectors

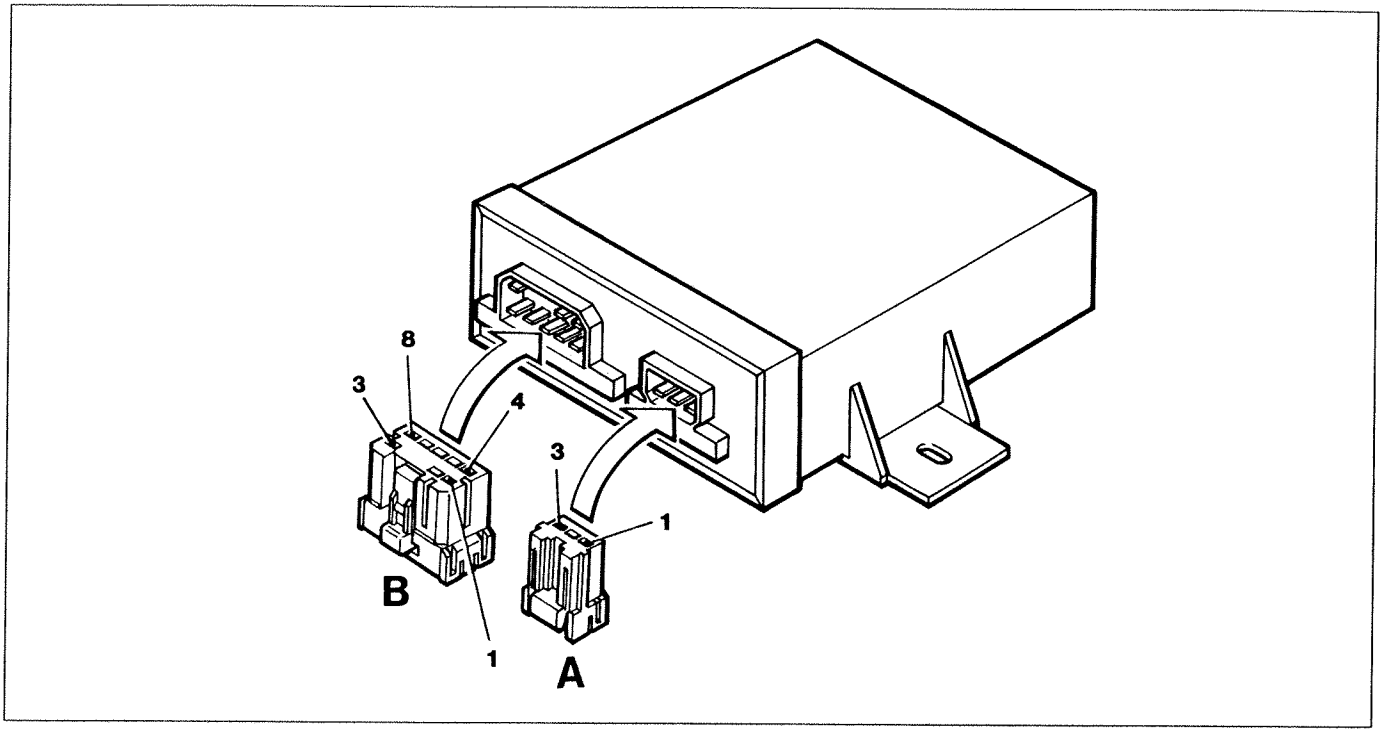

P3U097L01

Connector A

1. Aerial
2. Not connected
3. Aerial earth

Connector B

1. Not connected
2. Signal for warning light (LED)
3. +12 V from battery (+30)
4. Earth
5. K line for fuel injection control unit diagnostic socket
6. Serial line to fuel injection control unit
7. Not connected
8. +12 V with ignition ON (+15)

Electronic keys

The key handle contains a transponder, an electronic device which is NOT supplied from the battery and contains a code which effects transmission via ether.
When the key is inserted in the ignition switch, the transponder is energized by the aerial by means of radio waves; the transponder answers by emitting a code.
The car is delivered with 4 chiavi:
- 1 RED electronic key;
- 2 electronic keys;
- 1 garage electronic key;
- 1 card with the secret code for emergency starting of the car by means of the Fiat Lancia Tester.

Each key contains a transponder with a secret code. The RED key contains the master code and must be used ONLY for the key memorization procedure.
The RED key's code is the master code memorized in the fuel injection control unit and electronic key control unit; this necessarily links the fuel injection control unit with the RED key. If the RED key is lost or damaged, no further new keys can be memorized; in the absence of the RED key, a subsequent fault in the electronic key control unit will mean that the electronic key control unit and fuel injection control unit will have to be replaced.



The car owner is advised to CLOSELY follow the instructions below:
- *the RED key must be kept in a safe place (not in the car);*
- *the RED key must only be used for memorizing new keys;*
- *the card with the secret code must not be left in the car, in case of theft, but at the same time it must be available for emergency starting with the Fiat Lancia Tester.*

The RED key proves possession of the car, so it must always be present (with the card) during buying/selling of the car.

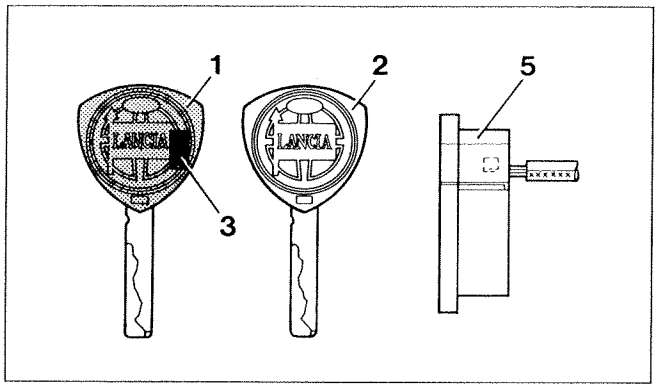

P3U098L01

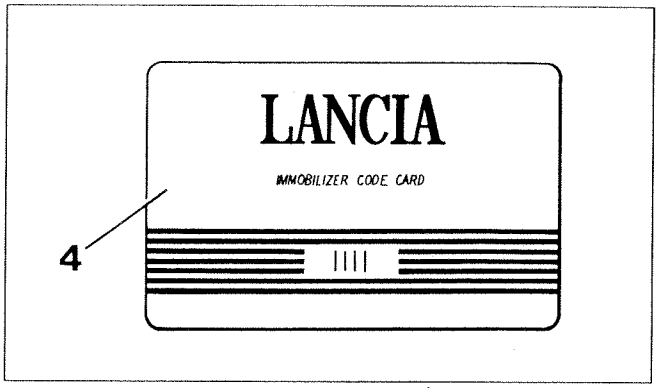

P3U098L02

1. RED key
2. Normal key
3. Transponder
4. Card with secret code
5. Aerial

Aerial

The purpose of the aerial is to:
- supply energy to the transponder for sending the code;
- receive the code from the transponder and send it to the electronic key control unit.

Since the aerial needs to be near the transponder (because of its electromagnetic immunity, small size and limited range of action of the transponder), it is mounted coaxially in relation to the ignition switch.

Code Card

This is the card which contains the 5-digit code for the emergency starting procedure via the Fiat Lancia Tester.

Electronic key system warning light

The green warning light (LED) is located in the centre of the dashboard between the air vents; if the alarm system is present, the two-colour warning light (green/red) is used by both systems.

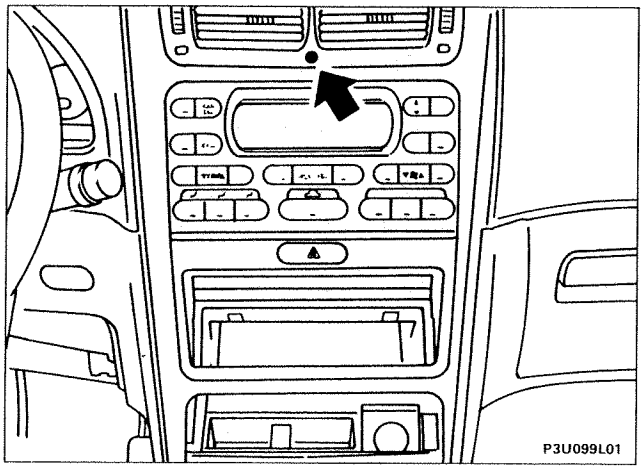

P3U099L01

The warning light is managed by the electronic key control unit as follows:
- OFF - key recognized in ignition ON position (+15), correct operation of the system;
- FLASHING - absence of key or key on STOP, engine operation is blocked;
- FLASHING WITH IGNITION KEY SET TO ON (+15) - warning light (LED) indicates that the electronic key control unit is brand new by flashing 2.5 seconds after the key has been turned to the ignition ON position (+15);
- ON WITH KEY AT IGNITION ON (+15) - if the warning light is permanently on with the key at the ignition ON position (+15), this means:
  a. key not recognized by the electronic key control unit (engine management prohibited);
  b. serial line not connected;
  c. key re-memorization procedure not carried out correctly.

Copyright Fiat Auto

If the electronic key's LED comes on temporarily or permanently during driving or starting, this does not necessarily mean a fault in the system but, in certain cases, may be evidence of a situation that could be interpreted as attempted tampering by a thief.

If this happens, in order to conduct a proper test on the system, stop the car, switch off the engine and switch the ignition off (STOP position). Turn the ignition ON again: the electronic key's LED will come on and will go out again after about 1 second.

If the LED stays on after this last procedure, repeat the operation, waiting at the ignition OFF (STOP) position for over 30 seconds. If after this attempt the electronic key's LED still stays on permanently when the ignition is on, carry out a fault diagnosis on the electronic key system.

KEY MEMORIZATION

First key memorization

The first key memorization is done in the factory.
To check that memorization has been done, insert a key in the ignition switch and switch the ignition ON (+15):
- if the warning light goes out, memorization has been done;
- if after about 2.5 seconds the warning light starts flashing again at greater frequency, the system is still brand new.

The brand-new condition of the electronic key control unit can be checked by the Fiat Lancia Tester in the fault diagnosis of the electronic fuel injection control unit.

Key memorization with brand-new system

A brand-new system means the presence on the car of an electronic fuel injection control unit and a electronic key control unit which do NOT have any memorized codes (for example after an intervention which has required the replacement of both control units).

Before starting this procedure, ensure that the electronic key control unit is really brand new. The use of an electronic key control unit which is faulty or already memorized will lead to the irreversible memorization of an incorrect code in the electronic fuel injection control unit, which will then not be useable on other cars.

The key memorization procedure is divided into two stages:
- the electronic keys' secret codes are memorized in the electronic key control unit;
- the electronic key control unit manages the memorization of the master code in the fuel injection control unit (which must also be brand new).

The second stage takes place automatically after the first has been completed successfully, when the ignition is switched on again (+15).
The procedure makes it possible to store a maximum of 8 and a minimum of 3 different keys.
The memorization procedure can only be carried out after the control unit has checked that everything is properly connected and working (universal active code, hence car not protected).
The presence of the universal code may be checked by the flashing of the warning light (green LED); it has a frequency of 1.6 Hz and duty cycle of 50%; this flashing starts 2.5
seconds after the key has been turned to the ignition ON position (+15); after this check, the memorization procedure may be carried out.

To avoid errors in the key memorization procedure, it is advisable to carefully read the procedure described on the following page before implementing it on the car.

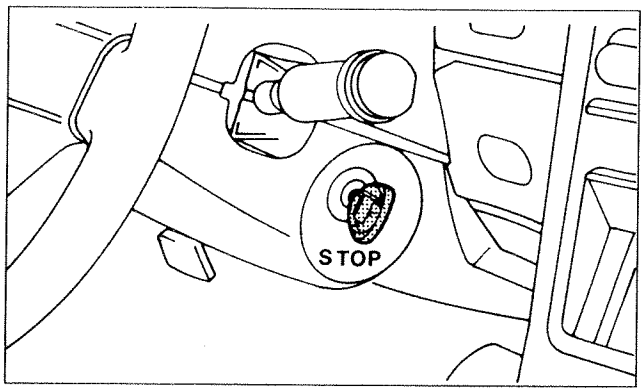

P3U100L01

Adding a new key necessarily involves the re-memorization of all the existing keys, since keys not used during this procedure are deleted from memory.

Insert the RED key in the ignition switch at the ignition OFF (STOP) position.

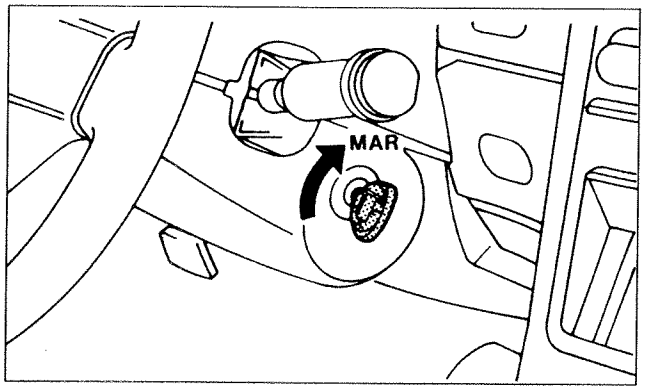

P3U100L04

Turn the RED key to the ignition ON position (+ 15); the warning light will come on for 0.7 s.

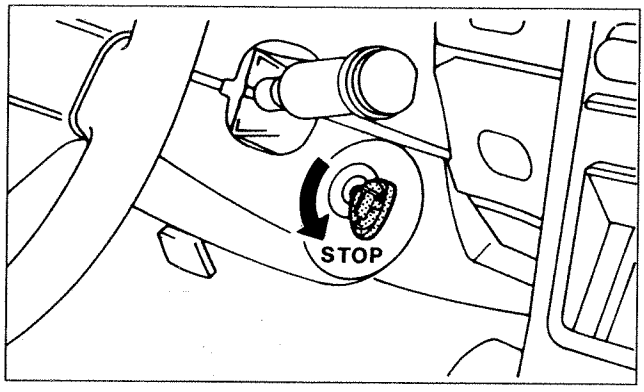

P3U100L03

When the warning light goes out, turn the RED key to the ignition OFF (STOP) position.

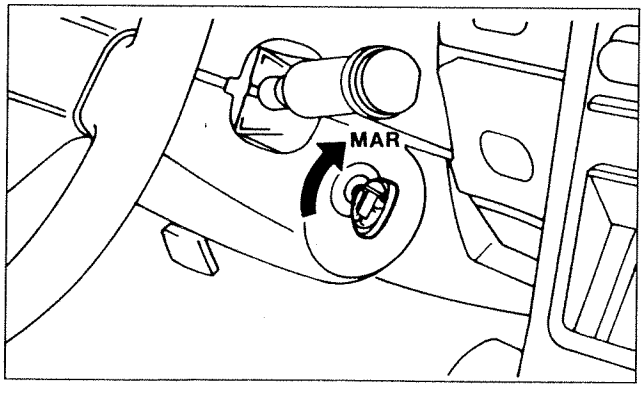

P3U100L02

Within 10 seconds:
- remove the RED key from the ignition block;
- insert a new key (1) in the ignition block and turn it to the ON position (+ 15); the warning light will come on for 0.7 s.

Copyright Fiat Auto

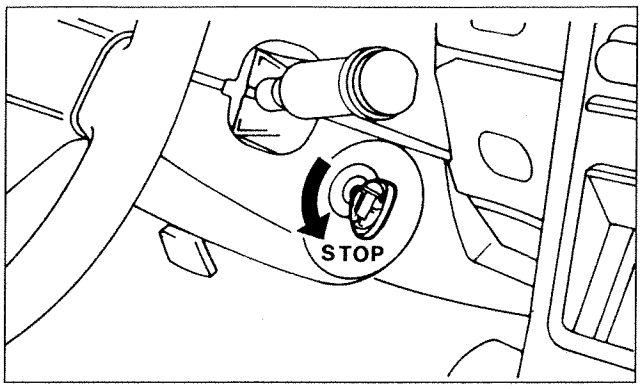

P3U101L01

When the warning light goes out, turn the key (1) to the ignition OFF position.

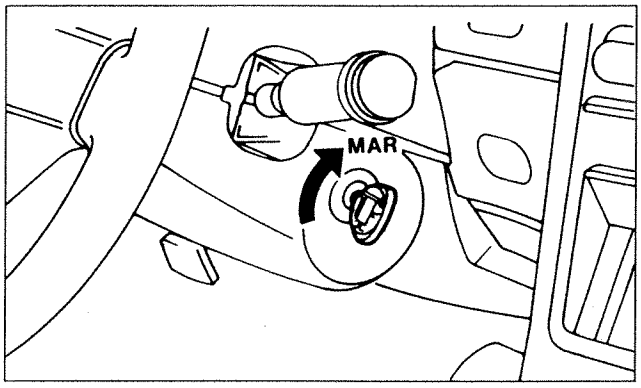

P3U101L02

Within 10 seconds:
- remove the key (1) from the ignition switch block;
- insert a new key (2) in the ignition switch block and turn it to the ignition ON (+15) position; the warning light comes on for 0.7 s.

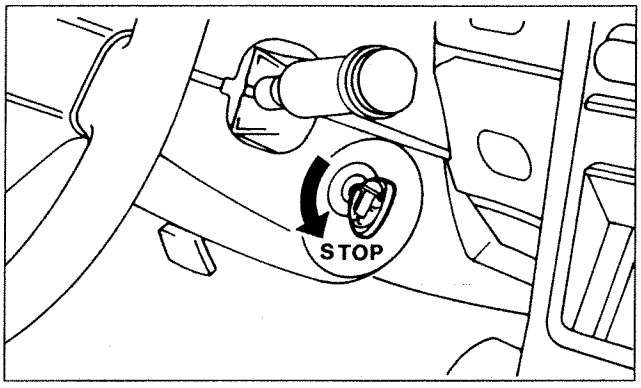

When the warning light goes out, turn the key (2) to the ignition OFF position.

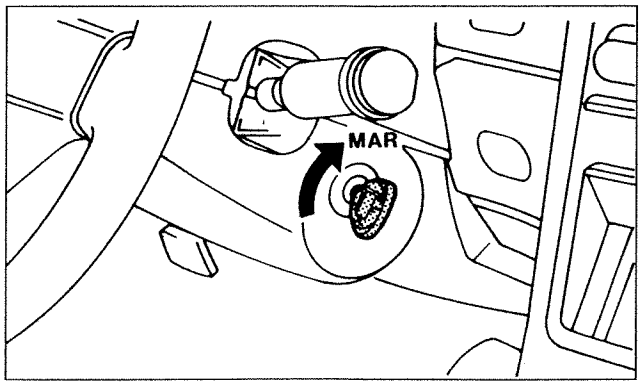

P3U100L04

Within 10 seconds:
- remove the key (2) from the ignition switch block;
- insert the RED key in the ignition switch block and turn it to the ignition ON position (+15); the warning light will come on for 0.7 s.

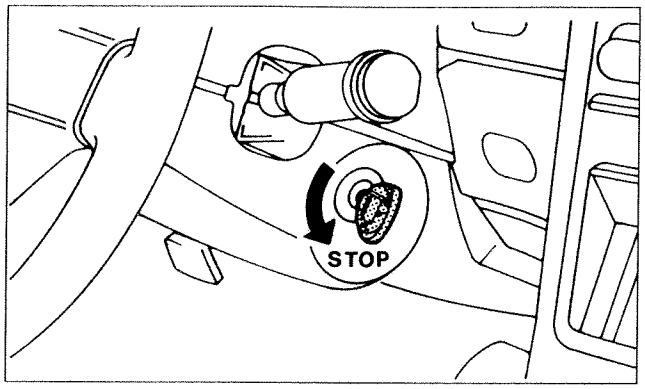

P3U102L01

When the indicator goes out, turn the RED key to the ignition OFF position.
The memorization procedure (memorization of the master code in the electronic fuel injection control unit) is completed as follows:
- turn the RED key to the ignition ON position (+15);
- keep the RED key at the ON position for about 3 s;
- the LED warning light comes on for 0.7 s and goes out definitively if the procedure has been completed successfully;
- the LED warning light comes on for 0.7 s and resumes flashing after about 2 seconds if the memorization has NOT been completed successfully. In this case, remove the RED key and repeat the key memorization procedure from the beginning.

NOTE *The memorization procedure has been described for 3 keys (including the RED key), but should be applied for all the keys supplied with the car (4 keys), plus any additional keys.*

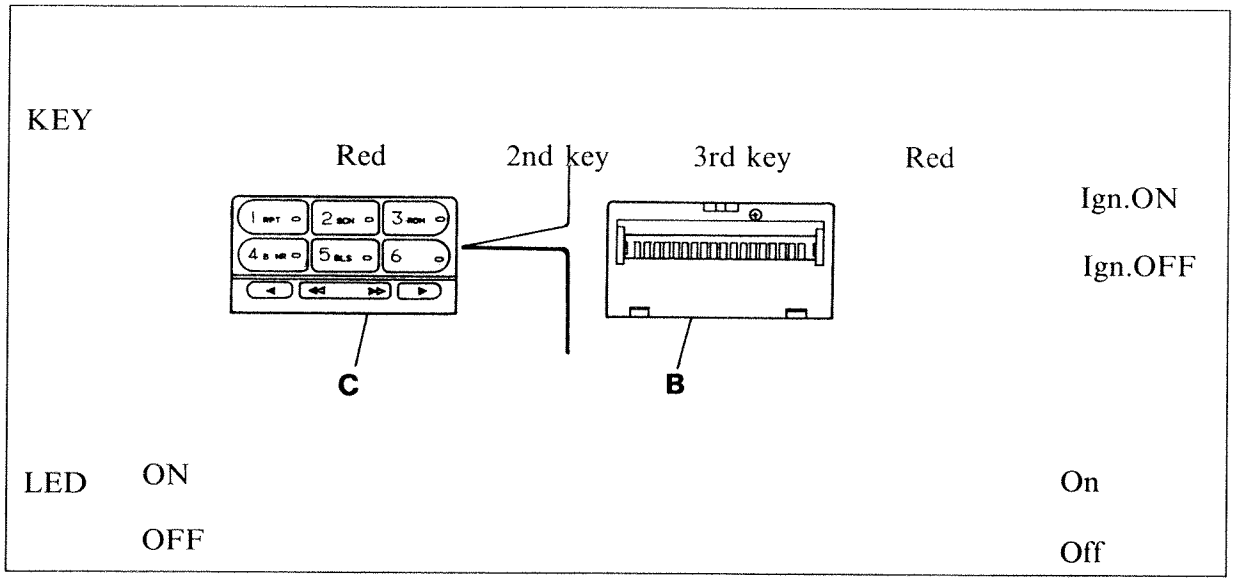

P3U09CL02

The diagram shows the LED coming on in relation to the memorization of the keys.

- If the procedure has not been carried out correctly, the memorization procedure must be repeated very carefully.
- If for any reason and at any moment you think you have made a mistake, set the key to the ignition ON position (+15) for over 2 s, or to the ignition OFF position for over 10 s, then start the key memorization procedure from the beginning.

On completion of memorization, ensure that all the keys supplied with the car start the engine; if one of the keys does not start the engine, repeat the key memorization procedure.

Key memorization with brand-new electronic key control unit and electronic fuel injection control unit which is NOT brand new

For the key memorization procedure with a brand-new electronic key control unit and electronic fuel injection control unit which is not brand new, follow the instructions for "key memorization with brand-new system" starting on page 106.

Key memorization with electronic key control unit and electronic fuel injection control unit which are NOT brand new

This procedure is necessary if further black keys are to be memorized, or if the set of keys has to be reset after the notches have been replaced.

Copyright Fiat Auto

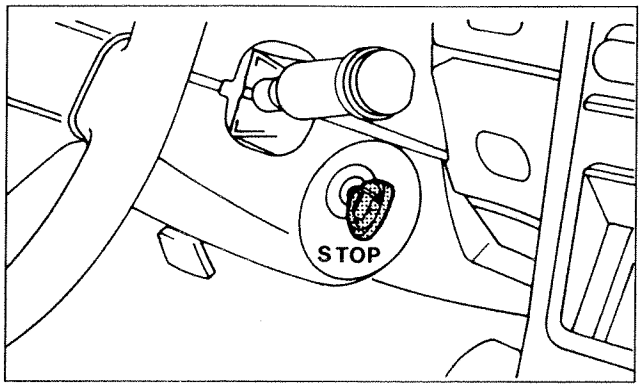

P3U100L01

Adding a new key necessarily involves the re-memorization of all the existing keys, since keys not used during this procedure are deleted from memory.

To avoid errors in the key memorization procedure, it is advisable to carefully read the procedure described below before implementing it on the car.

Insert the RED key in the ignition switch at the ignition OFF position.

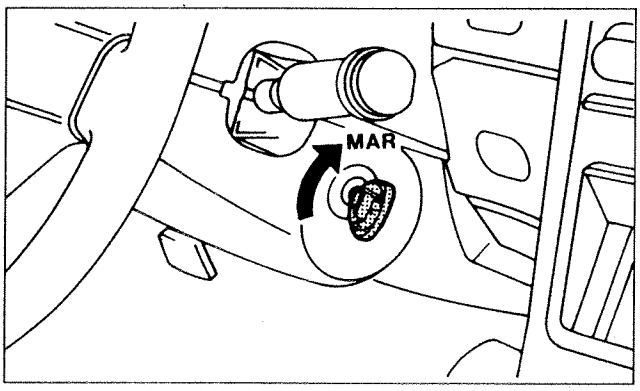

P3U103L02

Turn the RED key to the ignition ON position (+15); the warning light will come on for 0.7 s.

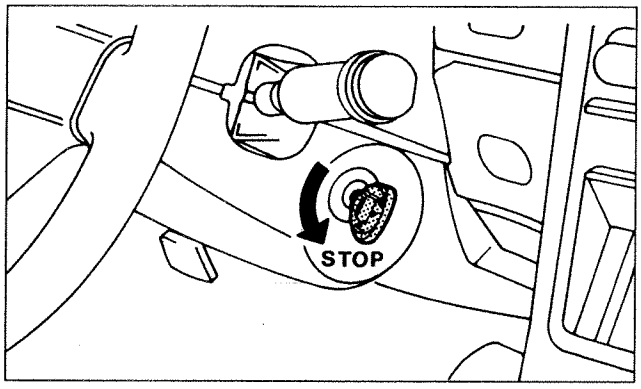

P3U103L03

When the warning lamp goes out, turn the RED key to the ignition OFF position.

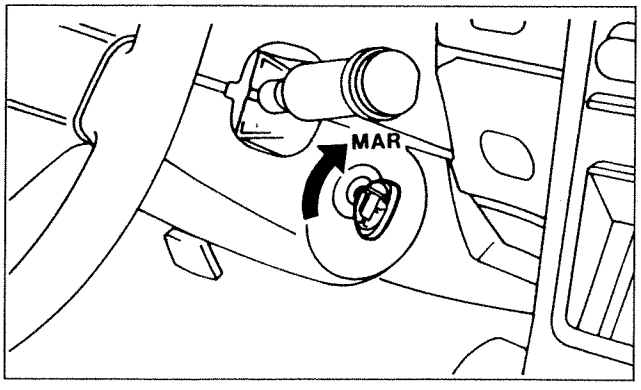

P3U103L04

Within 10 seconds:
- remove the RED key from the ignition switch block;
- insert a new key (1) in the ignition switch block and turn it to the ignition ON position (+15); the warning light will come on for 0.7 s.

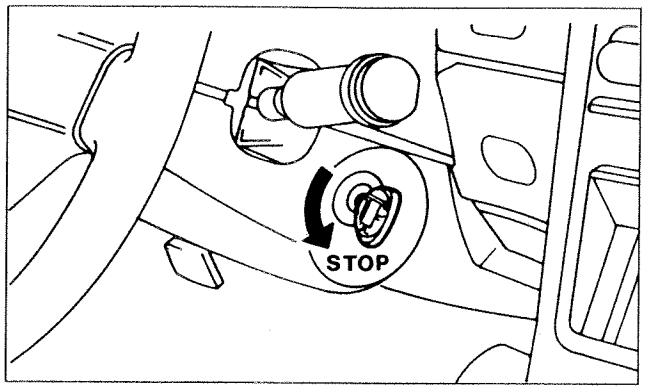

P3U104L01

When the warning light goes out, turn the key (1) to the ignition OFF position.

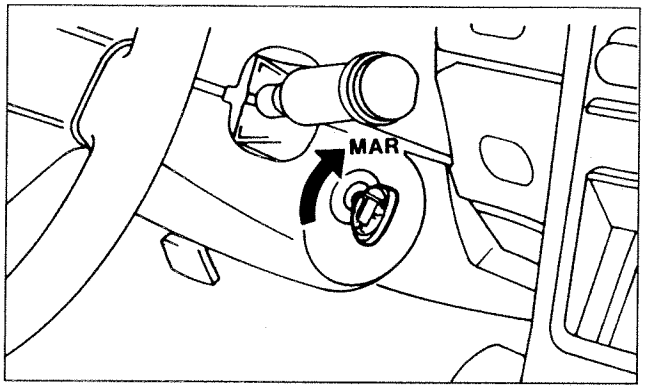

P3U101L02

Within 10 seconds:
- remove the key (1) from the ignition switch block.
- insert a new key (2) into the ignition switch block and turn it to the ignition ON position (+15); the warning light will come on for 0.7 s.

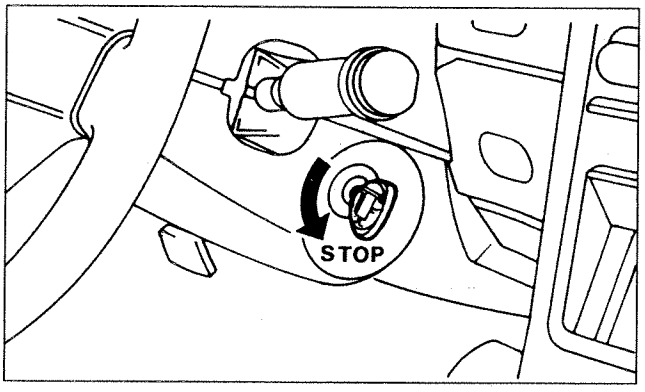

P3U101L01

When the warning light goes out, turn the key (2) to the ignition OFF position.

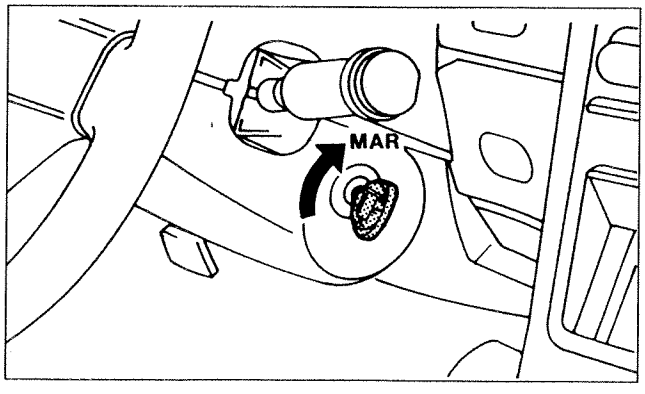

P3U100L04

Within 10 seconds:
- remove the key (2) from the ignition switch block;
- insert the RED key into the ignition switch block and turn it to the ignition ON position (+15); the warning light will come on for 0.7 s.

Copyright Fiat Auto

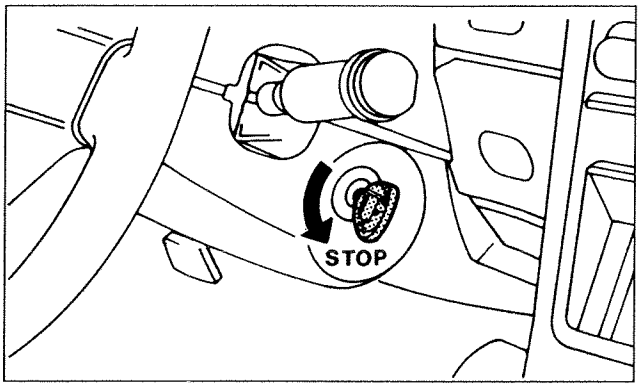

P3U102L01

When the warning lamp goes out, turn the RED key to the ignition OFF position.

This procedure cancels recognition of the keys memorized previously, and keeps the RED key with the keys just memorized.

NOTE *The memorization procedure has been described for 3 keys (including the RED key), but it should be applied for all the keys supplied with the car (4 keys), plus any additional keys.*

On completion of memorization, ensure that all the keys supplied with the car start the engine; if one of the keys does not start the engine, repeat the key memorization procedure.

Key memorization with electronic key control unit which is not brand new and brand-new electronic fuel injection control unit

If the electronic fuel injection control unit has to be replaced, the master code inside it has to be memorized. To memorize the master code in the electronic fuel injection control unit, simply turn the RED key to the ignition ON position (+15), after checking that the electronic key control unit is working correctly.

On no account may fuel injection control units be exchanged between cars in order to check their efficiency.

During fault diagnosis, before replacing the fuel injection control unit, make sure that the component in question really is faulty, since when the new fuel injection control unit is supplied, the master code is memorized, making that control unit totally unuseable on other cars.

FAULT DIAGNOSIS

The Fiat Lancia Tester is used to ascertain the hung status of the fuel injection control unit, or if the car starting code is not recognized.
The serial line between the injection control unit and the Fiat Lancia Tester is only obtained after the key as been turned to the ignition ON position (+15).
The electronic fuel injection control unit sends to the Fiat Lancia Tester a byte containing the error or status information.

Errors:

1. Serial line inactive, code not received or time-out during programming.
   This error indicates that the control units (electronic key and fuel injection) have not managed to start up a communication, and the probable causes may be a broken or short-circuited line, or a problem in the control units themselves.
2. Incorrect code received.
   The fuel injection control unit has received from the electronic key control unit a code which does not correspond to its memorized master code; the probable cause may be a change of fuel injection control unit, or the use of another RED key during memorization.
3. Incorrect code in the electronic key control unit.
   This means that an unknown code has been entered in the electronic key control unit, and the start-up of the car has not been permitted.

Status information:

- brand-new fuel injection control unit;
- "prohibit engine management" active;
- incorrect code in the electronic key control unit.

There is a counter in the control unit, which is activated when an error is memorized and decrements whenever the error is no longer present; when the counter reaches zero, the control unit deletes the error from memory. When the error is memorized, it can be distinguished as PRESENT or NOT PRESENT.

Internal relay driving K line

The rest position of the relay which drives the K line is that which also permits dialogue between the electronic key control unit and the electronic fuel injection control unit. The relay only switches onto the K line when the following events arise simultaneously:
- there is no activity on the serial line between the electronic key and fuel injection control units;
- a low signal is present on pin B5 for a period exceeding 500 ms.

The relay returns to the rest position when there is no activity on pin B5 (i.e. a high signal is present), for a period exceeding 30 seconds. If pin B5 remains at the low level for a period of over 5 seconds, there is probably a short circuit to earth and the relay returns to the rest position.
The electronic key control unit conducts a diagnosis on the internal relay; this diagnosis is displayed by the LED on the dashboard coming on only after the Fiat Lancia Tester has been connected (LED is on if the relay has changed over, permitting dialogue between the Fiat Lancia Tester and the fuel injection control unit; LED is off if the relay has not changed over).

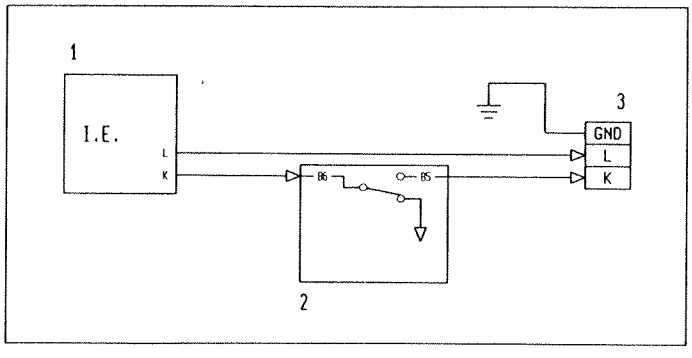

P3U122L01

1. Electronic fuel injection control unit
2. Electronic key control unit
3. Diagnostic socket

Copyright Fiat Auto

EMERGENCY STARTING PROCEDURE USING FIAT LANCIA TESTER

The emergency starting procedure enables the engine to be started if there is a problem in the electronic key system (electronic key control unit faulty, unuseable keys, etc.).
The emergency procedure can only be activated if the electronic fuel injection control unit is in the "*prohibit engine management*" state.
The procedure is activated by entering, on the Fiat Lancia Tester keyboard, the 5-digit code written on the Code Card.
This procedure can start the engine only once, but may be repeated an unlimited number of times.

INSTRUCTIONS CONCERNING THE REPLACEMENT OF COMPONENTS OF THE ELECTRONIC KEY SYSTEM

The electronic key system consists of various components connected to each other; care should be taken when working on or replacing one of these components.

Electronic fuel injection control unit

On no account may fuel injection control units be exchanged between cars in order to check their efficiency.

During fault diagnosis, before replacing the fuel injection control unit, make sure that the component in question really is faulty, since when the new injection control unit is supplied, the master code is memorized, making that control unit totally unuseable on other cars.

Electronic key control unit

Replacing the electronic key control unit necessarily involves rememorizing the electronic keys, following the procedure described starting on page 106.

RED key

If the RED key is not available, it will be impossible to memorize new keys which permit the car to be started.

If the RED key is lost or its transponder is broken/lost, it is necessary to replace:

- *notch kit and new keys;*
- *electronic key control unit;*
- *electronic fuel injection control unit.*

These components should be replaced at the first service intervention in which the RED key has to be used (e.g. breakage of ignition switch block).

Notch kit and new keys

If the ignition switch block has to be replaced, simply remove the transponder from the old RED key and insert it in the new key, then carry out all the memorization procedures for the new keys (procedure on page 106).

If the ignition switch block has been damaged a long way away from where the RED key is kept, the following emergency procedure must be carried out:
- replace the damaged ignition switch block;
- insert the new RED key without transponder in the ignition switch block;
- bring the old key's transponder in contact with the new RED key without transponder inserted in the ignition switch block (see figure on page 115);

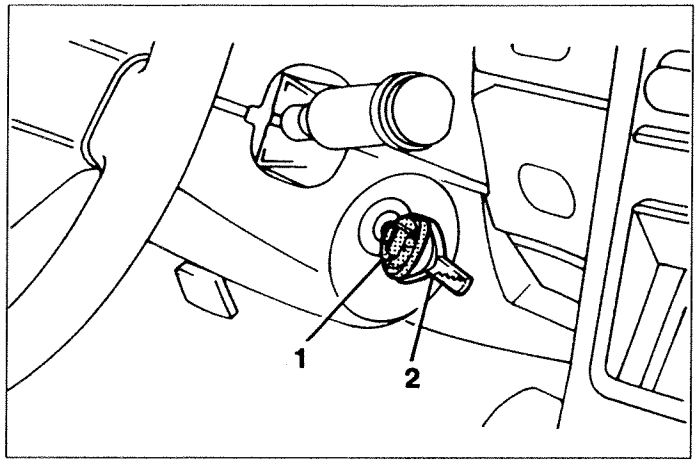

P3U15CL01

1. New RED key without TRANSPONDER
2. Old black key complete with TRANSPONDER

- Turn the key, keeping the handles in contact in order to be able to start the engine.

As soon as possible, the transponder contained in the OLD RED key should be transferred to the seating in the handle of the NEW RED key.

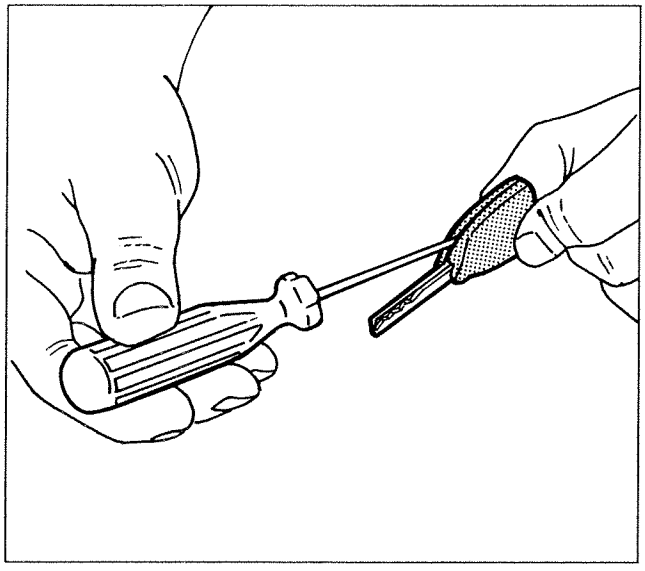

P3U108L02

Use maximum caution to prevent the transponder, which is a small component, from breaking or being lost (carry out the dismantling operation on a table).

- Insert a small screwdriver in the slot on the key and use it as a lever;
- open the RED key, taking care since it consists of two half-shells; the transponder is shown by the arrow;
- using a small screwdriver or point, remove the transponder from its seating in the OLD RED key;

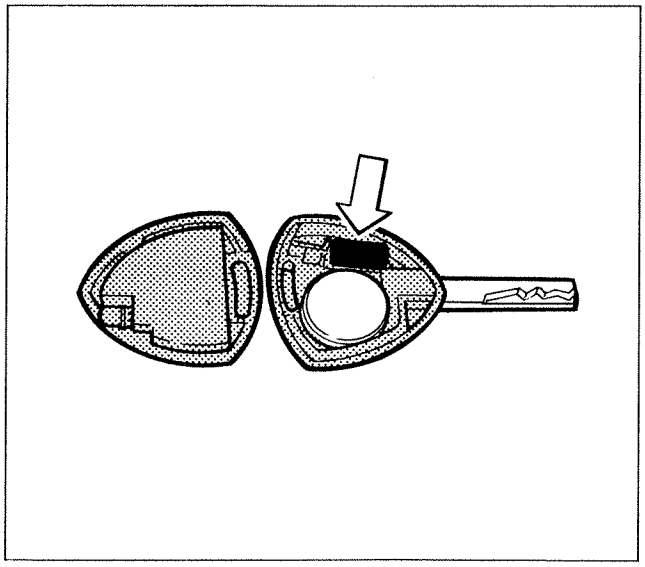

P3U108L03

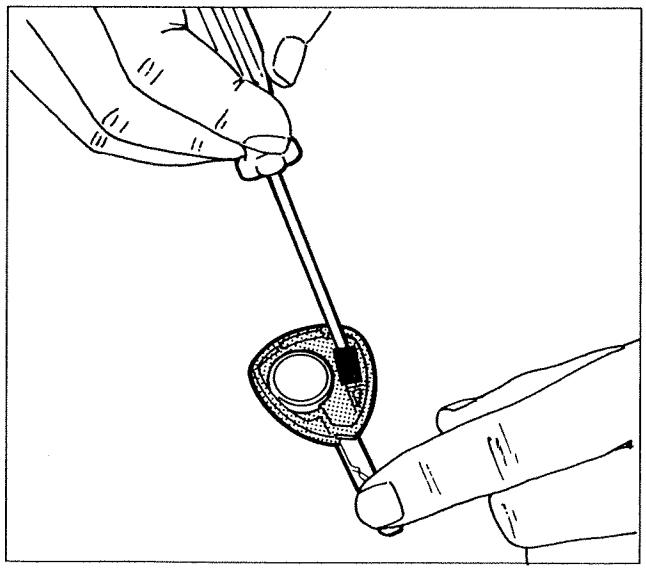

P3U108L04

Copyright Fiat Auto

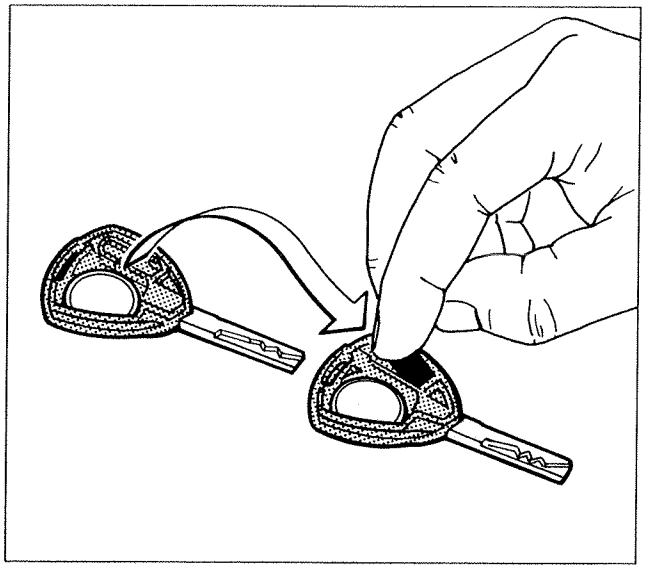

P3U109L01

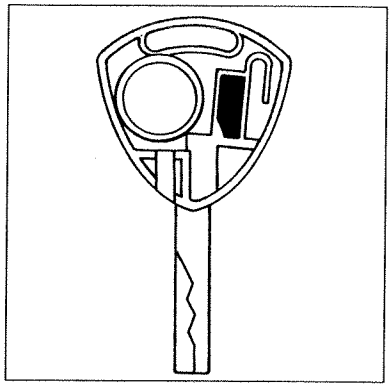

P3U109L03

- fit the transponder from the OLD RED key into the seating in the NEW RED key, in accordance with the orientation shown in the figure above, and taking care not to damage the electrical component;

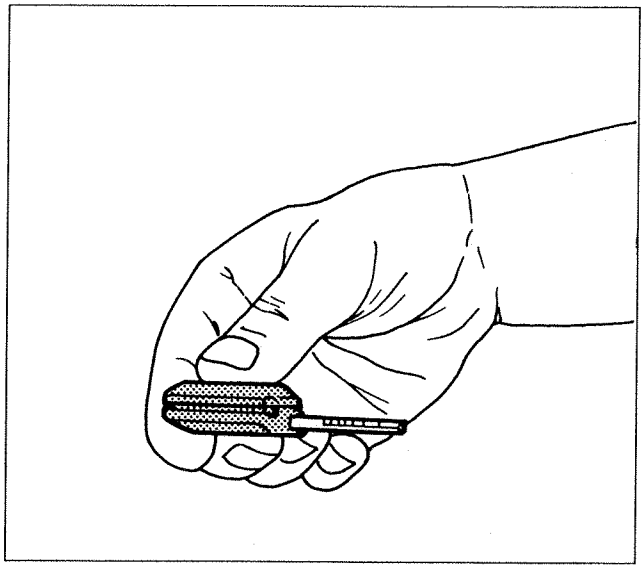

P3U109L02

- exert slight pressure and join the two half-shells of the NEW RED key;
- after carrying out the operation described above, carry out the memorization procedure for the new set of keys.

Transponder

It is absolutely forbidden to handle, replace or exchange the key transponders (except for replacing the notch kit and new keys, and only the RED key).

Addition of a new key to the four keys supplied with the car

Adding a new key involves rememorizing all the existing keys supplied with the car, since the keys not used during this procedure are deleted from memory.

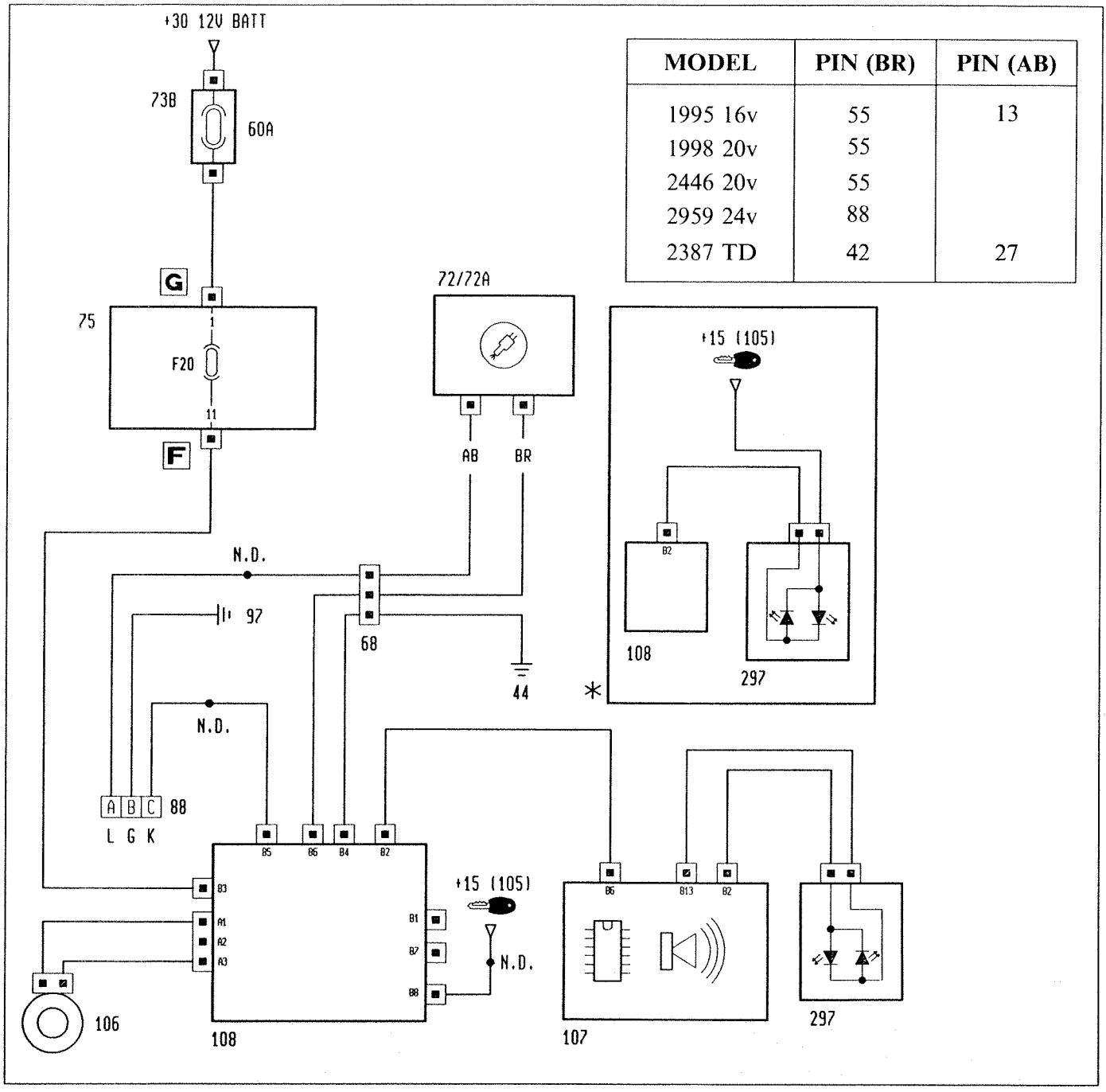

MODEL	PIN (BR)	PIN (AB)
1995 16v	55	13
1998 20v	55	
2446 20v	55	
2959 24v	88	
2387 TD	42	27

P3U128L01

Key

44 Power earth
68 Connection between dashboard cable/fuel injection cable
72 Fuel injection control unit
72A Fuel pump electronic control unit (2400 TD)
73B 60A fuse protecting I.G.E. control unit / fuse and relay unit
75 Fuse and relay unit (dashboard) F20 = 5A
88 Diagnostic socket for Fiat Lancia Tester
97 Earth on floor
105 Ignition switch
106 Electronic key aerial
107 Anti-theft device control unit
108 Electronic key control unit
297 Anti-theft device/electronic key device warning light

* *Variant connections for versions without anti-theft device.*

Copyright Fiat Auto

LOCATION ON CAR OF THE RADIO COMPONENTS

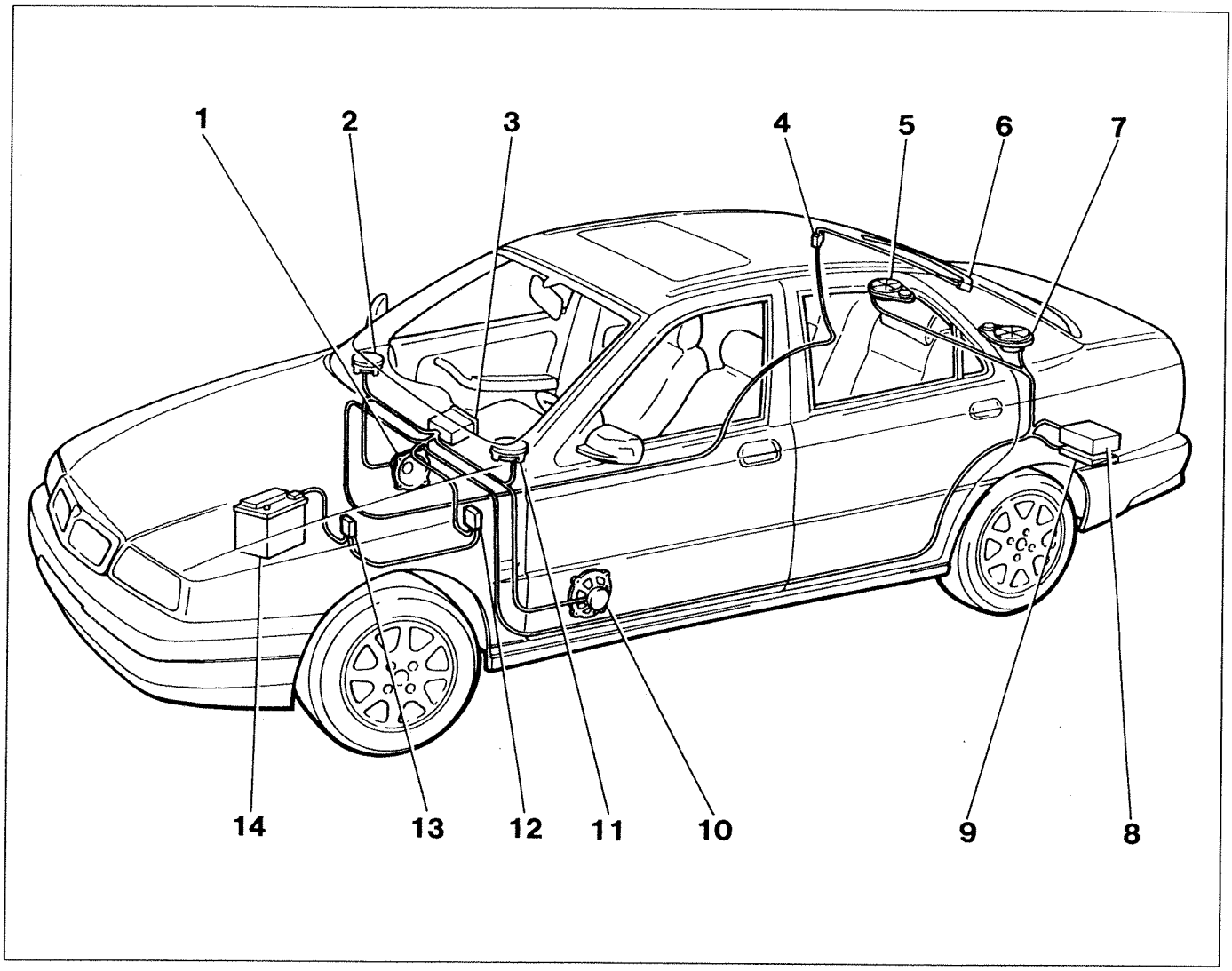

P3U10CL01

1. Front right loudspeaker (woofer)
2. Front right loudspeaker (tweeter)
3. ADT 838 radio (medium level - High)/ ADM 838 (high level Hi Fi)
4. Amplifier for aerial on heated rear window
5. Rear right loudspeaker (woofer and tweeter)
6. Printed aerial on rear window
7. Rear left loudspeaker (woofer and tweeter)
8. CD reader (mounted with high level - Hi Fi)
9. Amplifier (mounted with high level - Hi Fi)
10. Front left loudspeaker (woofer)
11. Front left loudspeaker (tweeter)
12. Fuse and relay unit with fuses F7 (15A) and F17 (5A) protecting car radio
13. 60 A fuse
14. Battery

page

BUMPERS

- Front bumper 1
- Rear bumper 2

BONNET LID

- Removing-refitting and adjustments 3

BOOT LID

- Removing-refitting boot lid and hinges 5
- Adjustments 6
- Removing-refitting boot lid lock 7
- Replacing lock barrel 8

FRONT DOOR

- Removing-refitting front door 9
- Removing-refitting door panel and protective cover 10
- Dismantling-reassembling door panel 11
- External rear view mirror 12
- Removing-refitting door lock 13
- Removing-refitting outer door handle 13
- Replacing door lock barrel 13
- Removing-refitting lowering window glass 14
- Removing-refitting window opening device 14

REAR DOOR

- Removing-refitting lowering window glass 15
- Removing-refitting fixed window 16

SEATS

- Removing-refitting front seat 17
- Dismantling-reassembling front seat 18
- Removing-refitting rear seat 21

INTERIOR FITTINGS

- Removing-refitting roof lining 22
- Removing-refitting front belts 24
- Removing-refitting rear belts 25
- Removing-refitting dashboard 26
- Replacing glove compartment lock barrel 32/1

page

WINDOW GLASSES

- Replacing front window (windscreen) 33
- Sticking plate supporting interior rear view mirror 34/1
- Replace rear window glass (rearscreen) 35

REPLACING BODY PANELS

- Replacing roof panel
- Replacing front cross member cover
- Replacing rear wing
- Replacing rear cross member lining
- Replacing underdoor side member
- Partial replacement of rear floor area
- Partial replacementof front side panel
- Replacing centre pillar
- Replacing front pillar
- Replacing front side panel
- Diagram for checking underbody
- Replacing fixed hinges

SUN ROOF

- Operation of sun roof

Copyright by Fiat Auto

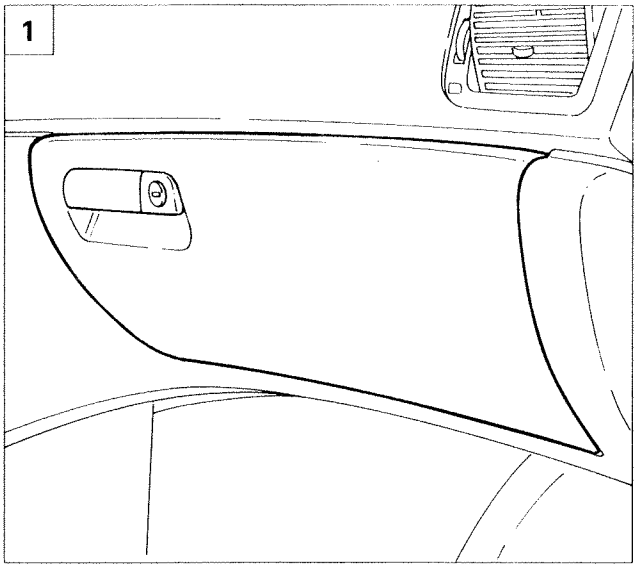

P3U321M01

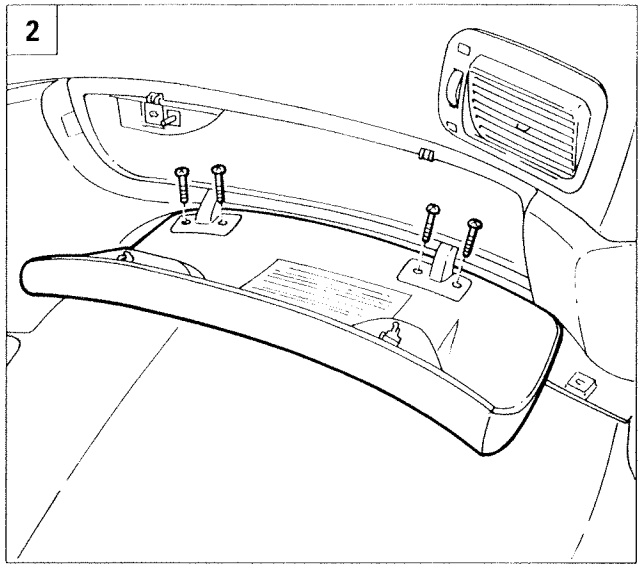

P3U321M02

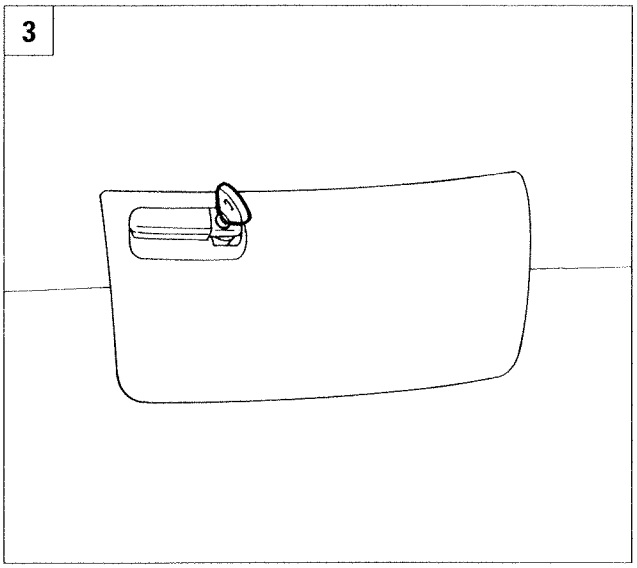

P3U321M03

REPLACING GLOVE COMPARTMENT LOCK BARREL

1. Open the glove compartment flap.
2. Undo the bolts fixing the glove compartment flap to the dashboard cover.
3. Insert the key in the lock barrel.
4. Move the lock barrel circlip, working via the opening shown by the arrow.
5. Extract the barrel, then replace it.

NOTE *To refit, simply reverse the order of the operations carried out for the removal.*

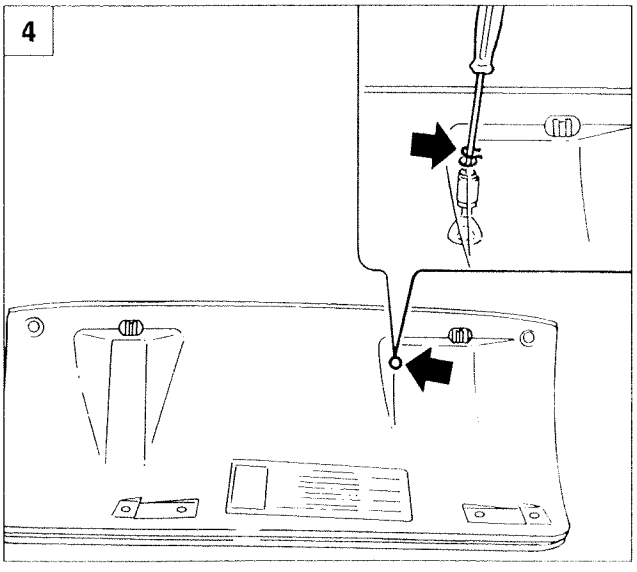

P3U321M04

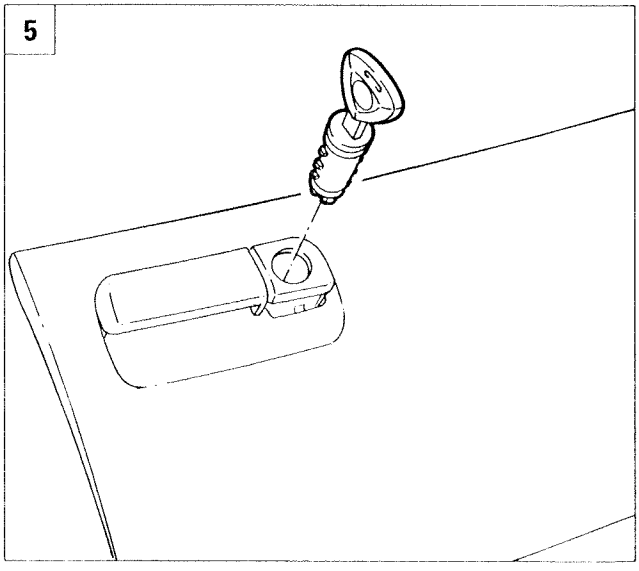

P3U321M05

DESCRIPTION	Trim levels/Engine types																
	Saloon							Station Wagon							Coupé		
	1998	1995T 16v	1998T 20v	2446	2959	2387 TD	2387 TD UNJET	1998	1995T 16v	1998T 20v	2446	2959	2387 TD	2387 TD UNJET	1995T 16v	1995T 20v	24
Versions without air conditioning Engine cooling - Water temperature gauge and overheating warning light	5	5	5	5	5	6	6	5	5	5	5	5	6	6	5	5	5
Versions with air conditioning Engine cooling - Water temperature gauge and overheating warning light	7	9	9	7	7	8	8	7	9	9	7	7	8	8	9	9	7
Preparation for middle of the range radio -Preparation for radio phone	10	10	10	10	10	10	10	11	11	11	11	11	11	11	10	10	1
Preparation for top of the range radio -Preparation for radio phone	12	12	12	12	12	12	12	13	13	13	13	13	13	13	12	12	1
Lancia CODE	14	15	15	14	14	16	16	14	15	15	14	14	16	16	15	15	1
Headlamp alignment - Electrically operated sun roof	17	17	17	17	17	17	17	17	17	17	17	17	17	17	17	17	1
Anti-lock brakes (A.B.S.)	18	18	18	18	18	18	18	18	18	18	18	18	18	18	18	18	1
Preparation for tow hook	19	19	19	19	19	19	19	19	19	19	19	19	19	19	19	19	1
Automatic heater	20	20	20	20	20	20	20	20	20	20	20	20	20	20	20	20	2
Starting - Motronic M 2.7 electronic ignition and injection - Recharging and warning light - Insufficient engine oil pressure warning light - Injection system failure warning light		21							21						21		
Starting - Motronic 2.10.3 electronic ignition and injection - Recharging and warning light - Insufficient engine oil pressure warning light - Injection system failure warning light			22							22						22	
Starting - Motronic 2.10.3 electronic ignition and injection - Recharging and warning light - Insufficient engine oil pressure warning light - Injection system failure warning light	23			23				23			23						2
Version with automatic transmission Starting - Motronic 2.10.3 electronic ignition and injection - Recharging and warning light - Insufficient engine oil pressure warning light - Injection system failure warning light	24			24				24			24						2
Starting - Motronic electronic ignition and injection - Recharging and warning light - Insufficient engine oil pressure warning light - Injection system failure warning light					25							25					
Version with automatic transmission Starting - Motronic electronic ignition and injection - Recharging and warning light - Insufficient engine oil pressure warning light - Injection system failure warning light					26							26					
Starting - MSA11-310 fuel pump electronic control unit - Recharging and warning light - Insufficient engine oil pressure warning light - Injection system failure warning light - Heater plugs control unit and warning light						27							27				
Starting - Diesel injection pressure pump electronic control unit - Recharging and warning light - Insufficient engine oil pressure warning light - Injection system failure warning light - Heater plugs control unit and warning light							28							28			
Side lights and warning light - Dipped headlamps and warning light - Main beam headlamps and warning light - Parking lights - Headlamp flasher - Number plate lights	29	29	29	29	29	29	29	29	29	29	29	29	29	29	29	29	2
Direction indicators and warning light - Hazard warning lights and warning light - Braking lights - Reversing lights	30	30	30	30	30	30	30	31	31	31	31	31	31	31	30	30	3
Fog lights and warning light - Rear fog lamps and warning light	32	32	32	32	32	32	32	32	32	32	32	32	32	32	32	32	3

Copyright by Fiat Auto

Trim levels/Engine types														
oon				Station Wagon							Coupé			
.46	2959	2387 TD	2387 TD UNJET	1998	1995T 16v	1998T 20v	2446	2959	2387 TD	2387 TD UNJET	1995T 16v	1995T 20v	2446	2959
5	5	6	6	5	5	5	5	5	6	6	5	5	5	5
7	7	8	8	7	9	9	7	7	8	8	9	9	7	7
0	10	10	10	11	11	11	11	11	11	11	10	10	10	10
2	12	12	12	13	13	13	13	13	13	13	12	12	12	12
4	14	16	16	14	15	15	14	14	16	16	15	15	14	14
7	17	17	17	17	17	17	17	17	17	17	17	17	17	17
8	18	18	18	18	18	18	18	18	18	18	18	18	18	18
9	19	19	19	19	19	19	19	19	19	19	19	19	19	19
0	20	20	20	20	20	20	20	20	20	20	20	20	20	20
					21						21			
						22						22		
3				23			23						23	
4				24			24						24	
	25							25						25
	26							26						26
		27							27					
			28							28				
9	29	29	29	29	29	29	29	29	29	29	29	29	29	29
0	30	30	30	31	31	31	31	31	31	31	30	30	30	30
2	32	32	32	32	32	32	32	32	32	32	32	32	32	32

DESCRIPTION	Trim levels/Engine types																		
	Saloon							Station Wagon							Coupé				
	1998	1995T 16v	1998T 20v	2446	2959	2387 TD	2387 TD UNJET	1998	1995T 16v	1998T 20v	2446	2959	2387 TD	2387 TD UNJET	1995T 16v	1995T 20v	2446	2959
n wash/wipe - Headlamp washer - Electric horns	33	33	33	33	33	33	33	34	34	34	34	34	34	34	33	33	33	33
terior lights	35	35	35	35	35	35	35	37	37	37	37	37	37	37	36	36	36	36
gauge and reserve warning light - Handbrake warning light - Insufficient brake fluid level warning light unfastened warning light - Speedometer - Milometer/trip meter and zeroing button - Rev counter -Cur- t- Voltmeter	38	38	38	38	38	39	39	38	38	38	38	38	39	39	38	38	38	38
ont windows	40	40	40	40	40	40	40	40	40	40	40	40	40	40	41	41	41	41
ar windows	42	42	42	42	42	42	42	42	42	42	42	42	42	42				
li - Heated rear windscreen and warning light	43	43	43	43	43	43	43	43	43	43	43	43	43	43	43	43	43	43
/ adjustable heated, folding external rear view mirrors - Electro-chromic internal rear view mirror	44	44	44	44	44	44	44	44	44	44	44	44	44	44	44	44	44	44
id failure warning light - Seat belt pre-tensioners - Servotronik device	45	45	45	45	45	45	45	45	45	45	45	45	45	45	45	45	45	45
ith alarm cking and signalling of doors open	46	46	46	46	46	46	46	46	46	46	46	46	46	46	47	47	47	47
ithout alarm cking and signalling of doors open - Device indicating doors locked	48	48	48	48	48	48	48	48	48	48	48	48	48	48	49	49	49	49
eated front seats - Driver's seat with memory	50	50	50	50	50	50	50	50	50	50	50	50	50	50	51	51	51	51
climate control	52	52	52	52	52	53	53	52	52	52	52	52	53	53	52	52	52	52
transmission (Aisin)	54			54				54			54						54	
t smission (ZF)					55							55						55
	56	57	57	56	56	58	58	56	57	57	56	56	58	58	60	60	59	59
Inforcenter	61	61	61	61	61	62	62	61	61	61	61	61	62	62	63	63	63	63
I.G.E. control unit connections	64	64	64	64	64	64	64	64	64	64	64	64	64	64	64	64	64	64
l damping suspension (S.C.S.)	65	65	65	65	65	65	65	65	65	65	65	65	65	65	65	65	65	65
t panel connections	66	66	66	66	66	67	67	66	66	66	66	66	67	67	66	66	66	66
nit (in dashboard)	68	68	68	68	68	68	68	68	68	68	68	68	68	68	68	68	68	68
control unit (in engine compartment)	69	69	69	69	69	69	69	69	69	69	69	69	69	69	69	69	69	69

DESCRIPTION	1998
Windscreen wash/wipe - Headlamp washer - Electric horns	33
Vehicle interior lights	35
Fuel level gauge and reserve warning light - Handbrake warning light - Insufficient brake fluid level warning light - Seat belt unfastened warning light - Speedometer - Milometer/trip meter and zeroing button - Rev counter -Current socket- Voltmeter	38
Electric front windows	40
Electric rear windows	42
Ideogram lights - Heated rear windscreen and warning light	43
Electrically adjustable heated, folding external rear view mirrors - Electro-chromic internal rear view mirror	44
Air bag and failure warning light - Seat belt pre-tensioners - Servotronik device	45
Version with alarm Central locking and signalling of doors open	46
Version without alarm Central locking and signalling of doors open - Device indicating doors locked	48
Electric, heated front seats - Driver's seat with memory	50
Automatic climate control	52
Automatic transmission (Aisin)	54
Automatic transmission (ZF)	
Alarm	56
Complete Inforcenter	61
Complete I.G.E. control unit connections	64
Controlled damping suspension (S.C.S.)	65
Instrument panel connections	66
Junction unit (in dashboard)	68
Peripheral control unit (in engine compartment)	69

Electrical symbols


Positions

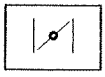
Choke

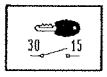

Switch discharge

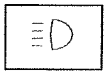
Main beam headlamps

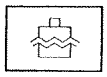
Water in fuel filter


Dipped headlamps

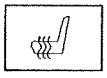
Heated seat

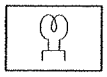
Heater plugs

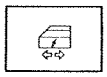
Direction indicators signalling with central locking locked


Seat belts

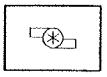
Turbocharger pressure

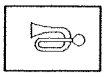
Electric horns

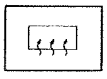
Heated rear windscreen

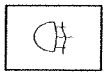
Rear fog lamp

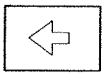
Left direction indicator

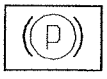

Handbrake applied and insufficient brake fluid level


Fog light

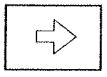
Right direction indicator



A.B.S.


Brake pad wear


Engine cooling fan


Hazard warning lights


Turbocharger pressure

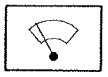
Windscreen wiper

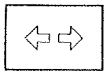
Direction indicators

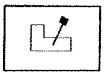
Auto. trans. fluid temperature

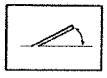
Electrically operated sun roof


Handbrake applied and insufficient brake fluid level

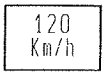

Speed limits

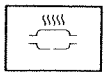
Catalytic silencer temperature

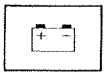
Recharging

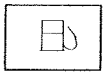
Fuel level


Resistance

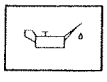
Engine oil pressure

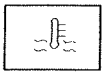
Engine coolant temperature


Diode

P3U01IZ01

Copyright by Fiat Auto

55.

Electrical symbols

 Warning light	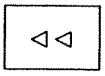 Trip computer	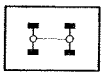 Differential lock
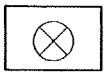 Bulb	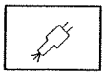 Electronic injection	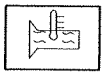 Automatic gearbox oil temperature
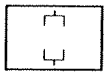 Fuse with reference number	 Engine oil level	 Temperature
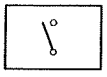 Switch open	 Brake fluid level (Japanese version)	 Anti-theft device
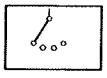 Selector switch	 Doors open	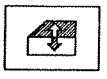 Electric windows
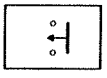 Button open	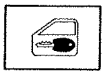 Central locking	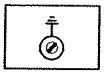 Earth
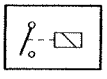 Switch controlled by coil (Relay)	 Controlled damping suspension Sport Function	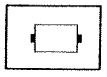 Number plate lights
 Motor	 Transistor	 Impulse generator (Timer)
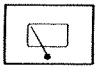 Rearscreen wiper	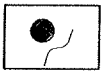 Air-Bag	 Analogue clock
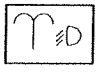 Headlamp washer	 A.B.S. (Japanese Version)	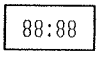 Digital clock
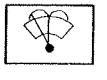 Windscreen wash/wipe	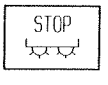 Brake lights failure	 Speedometer
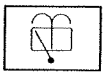 Rearscreen wash/wipe	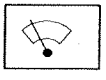 Windscreen wiper	 Rev counter

P3U02IZ01

Electrical symbols

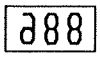

Digital speedometer


Digital rev counter


Digital fuel gauge


Analogue fuel gauge


Analogue engine coolant temperature gauge


Econometer


Digital engine temperature gauge


Engine oil temperature gauge


Engine oil pressure gauge


Voltmeter

P3U03IZ01

Copyright by Fiat Auto

55.

Explanation of how to read wiring diagrams

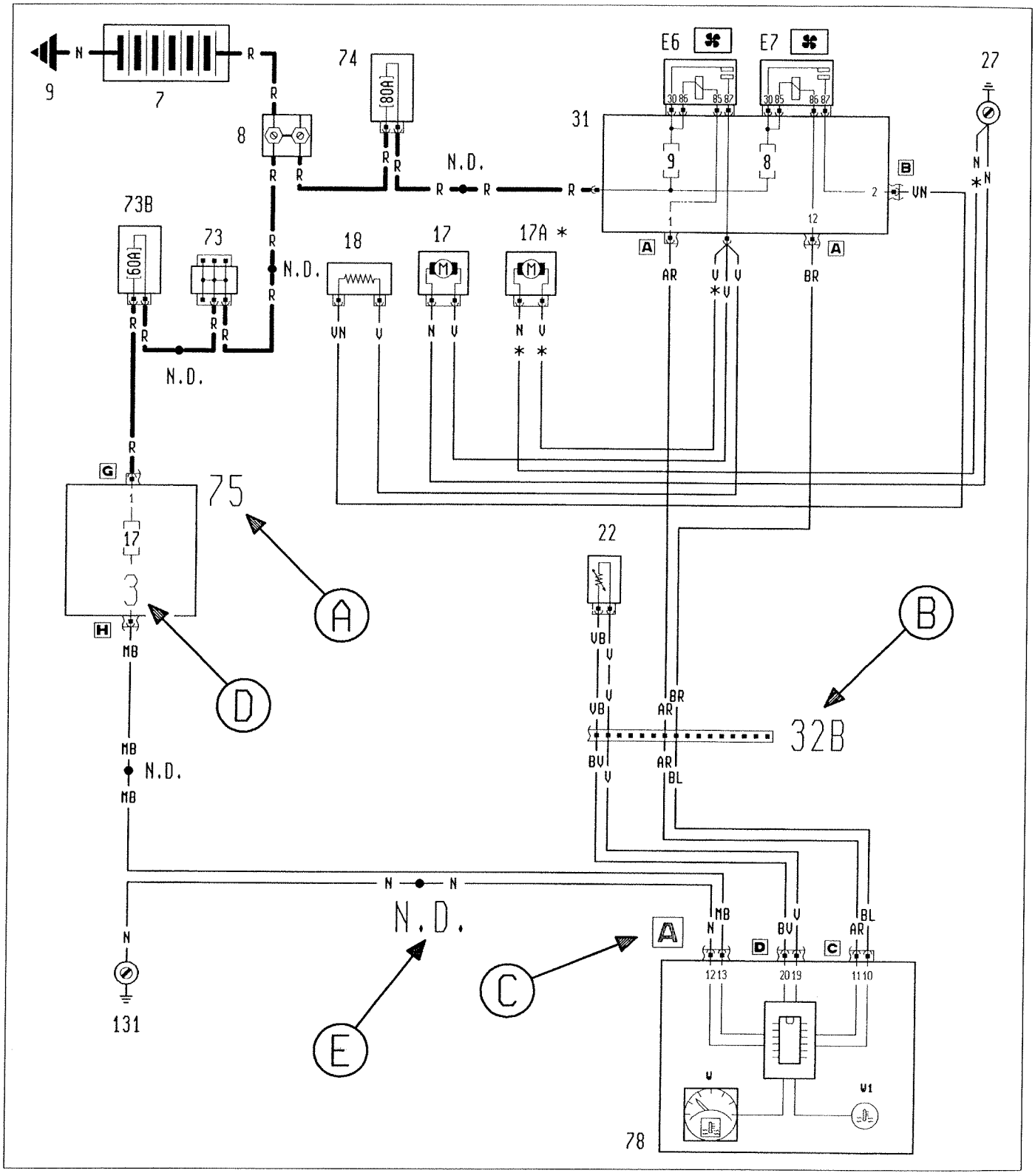

Reference key

P3U04IZ01

A Component number
B Connection number
C Identification of connector at component
D Connection pin number
E Ultrasound welding taped in cable loom

Petrol versions without air conditioning

Engine cooling - Water temperature gauge and overheating warning light - (See key at end of wiring diagrams)

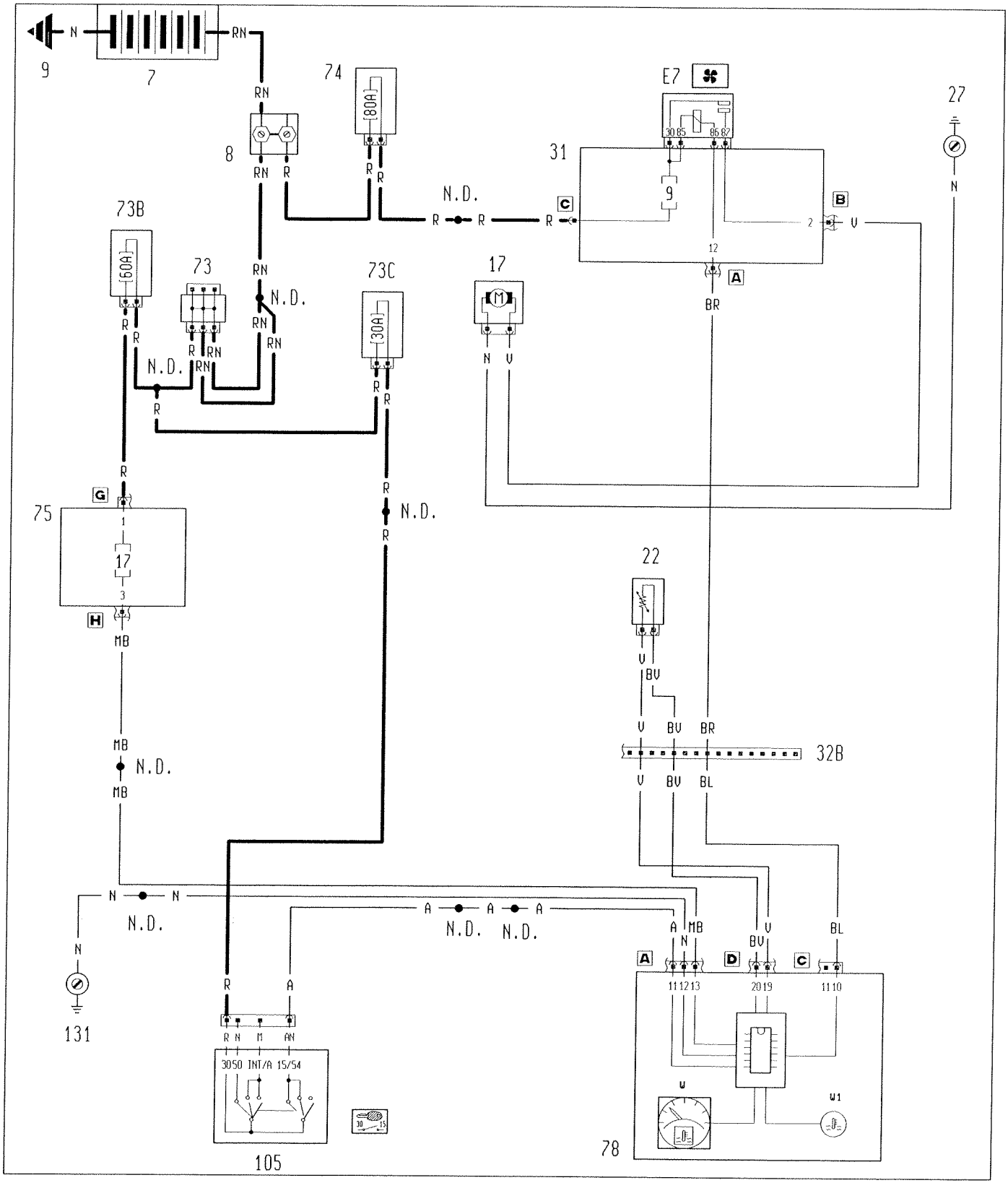

Copyright by Fiat Auto

55.

TD versions without air conditioning

Engine cooling - Water temperature gauge and overheating warning light - (See key at end of wiring diagrams)

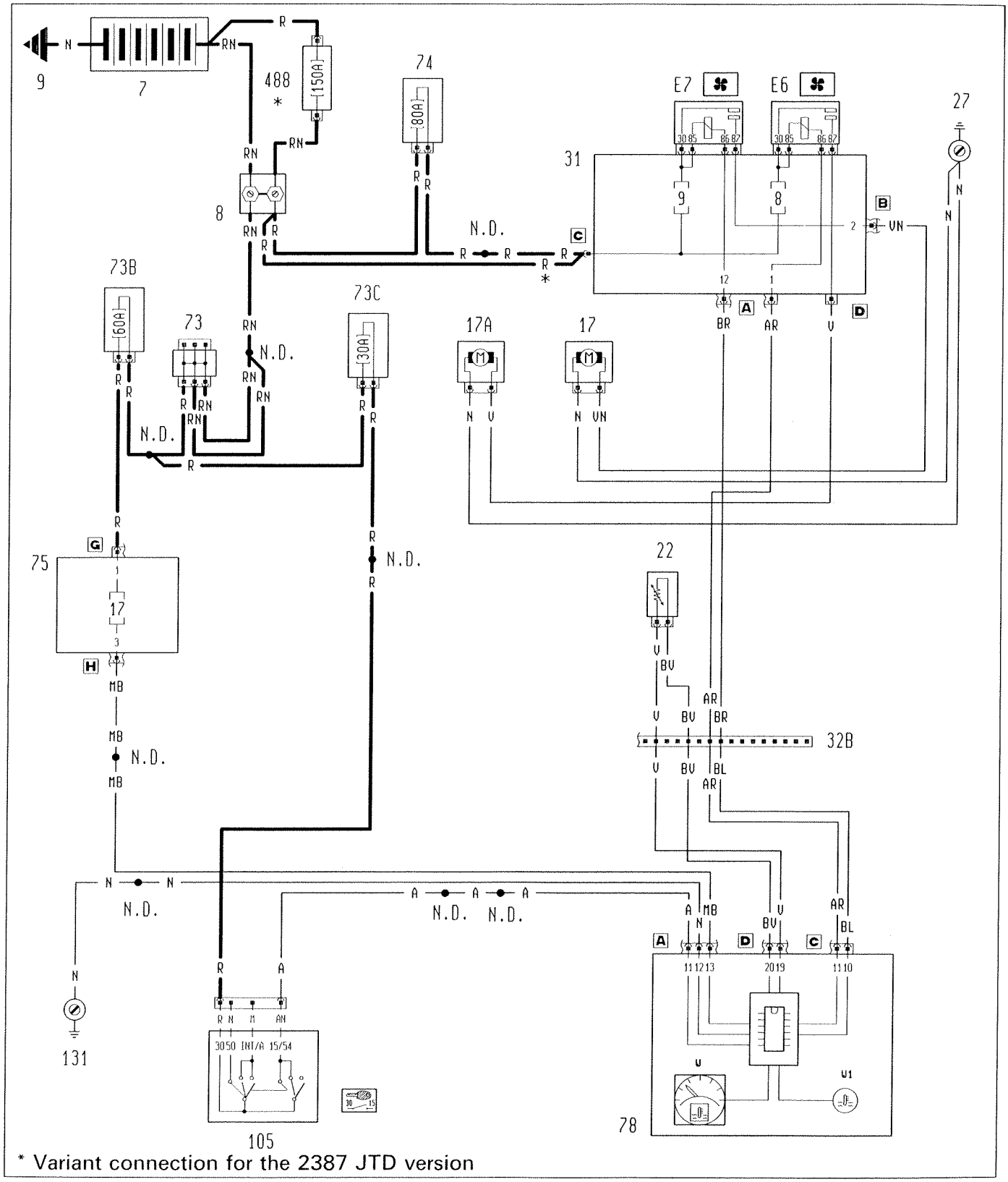

P3U06IZ01

Naturally aspirated petrol versions with air conditioning

Engine cooling - Water temperature gauge and overheating warning light - (See key at end of wiring diagrams)

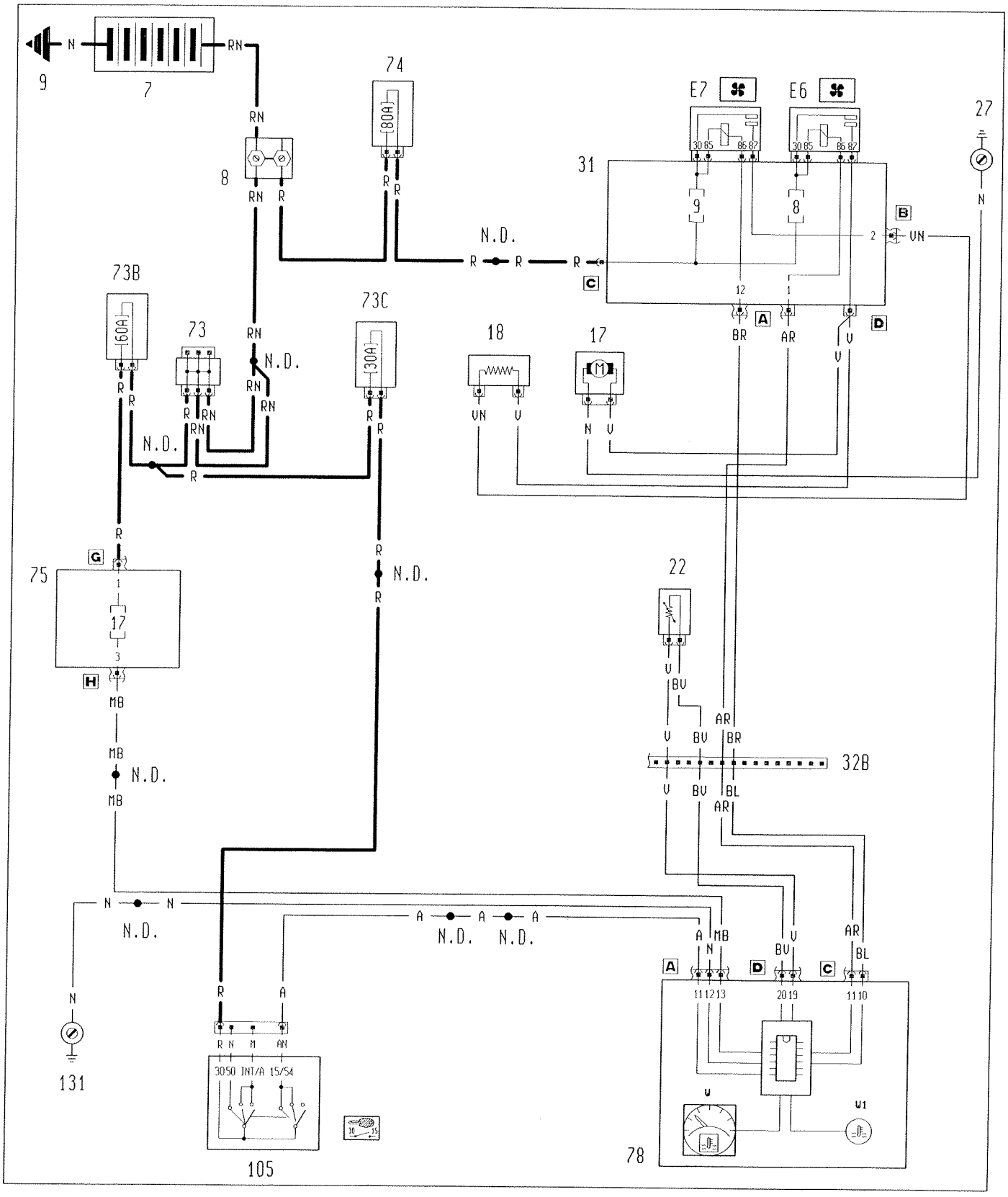

Copyright by Fiat Auto

55.

TD versions with air conditioning

Engine cooling - Water temperature gauge and overheating warning light - (See key at end of wiring diagrams)

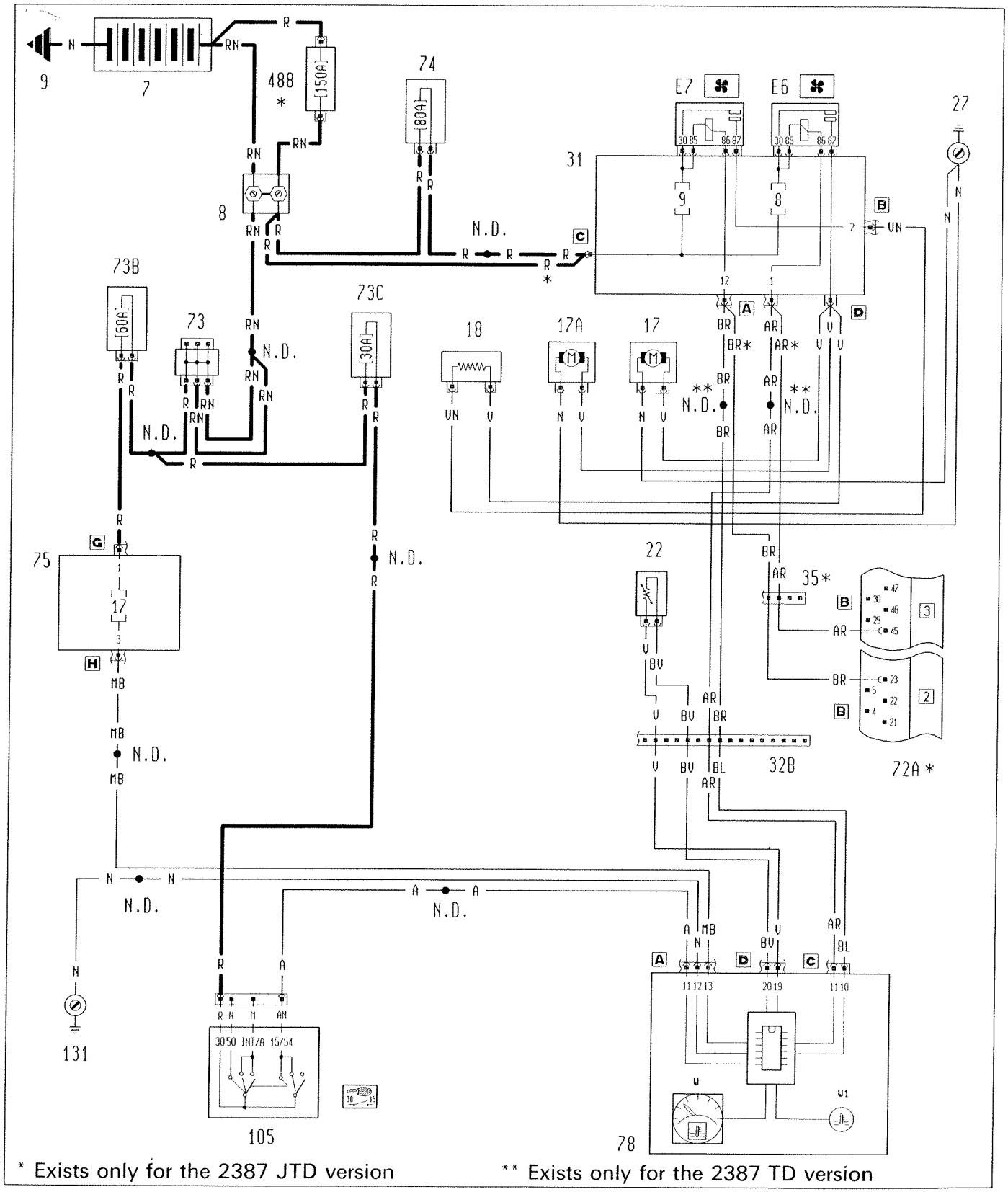

* Exists only for the 2387 JTD version

P3U08IZ01

Petrol turbo versions with air conditioning

Engine cooling - Water temperature gauge and overheating warning light - (See key at end of wiring diagrams)

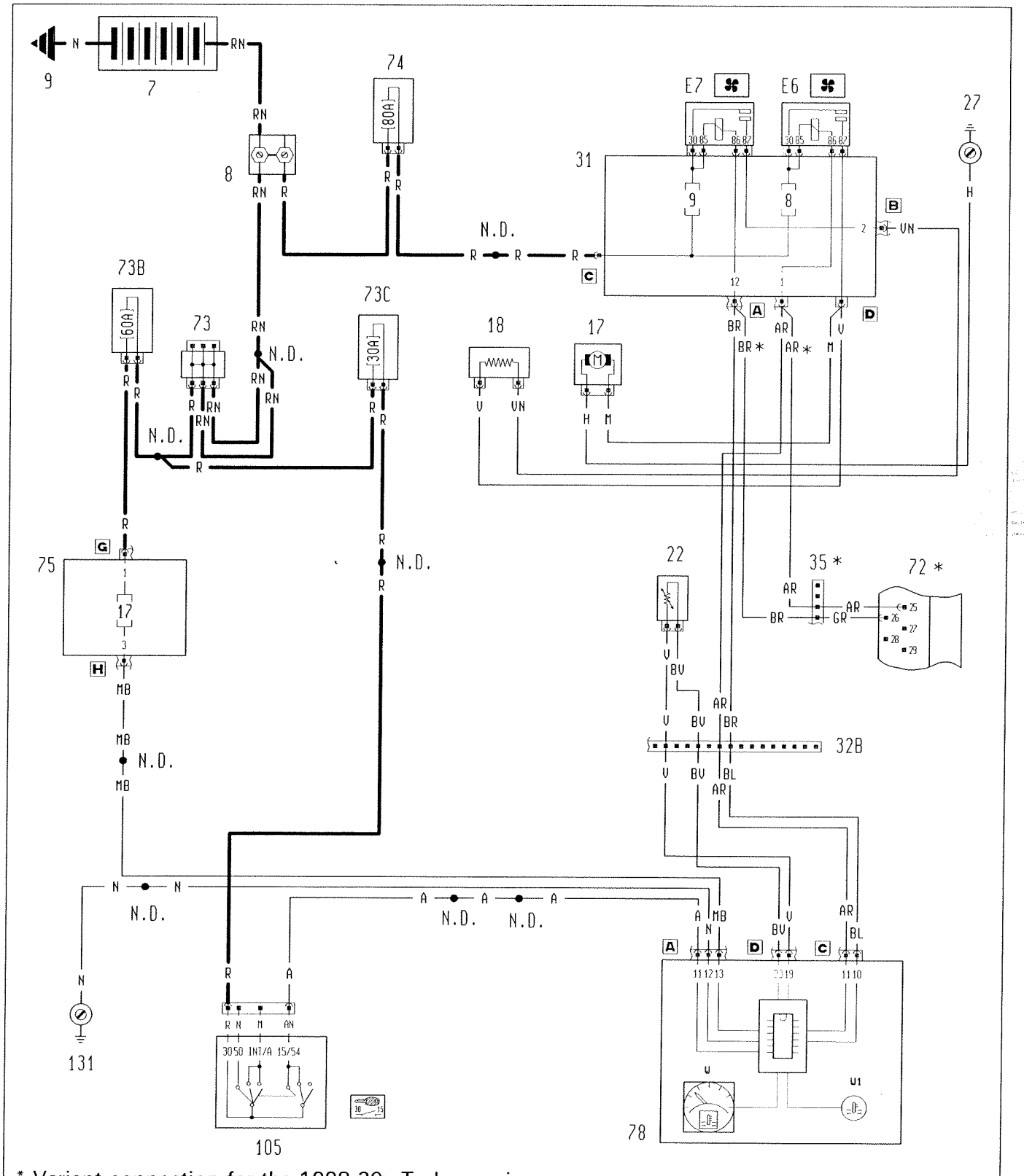

* Variant connection for the 1998 20v Turbo version

P3U09IZ01

55.

Preparation for middle of the range radio - Preparation for radio phone - (See key at end of wiring diagrams)

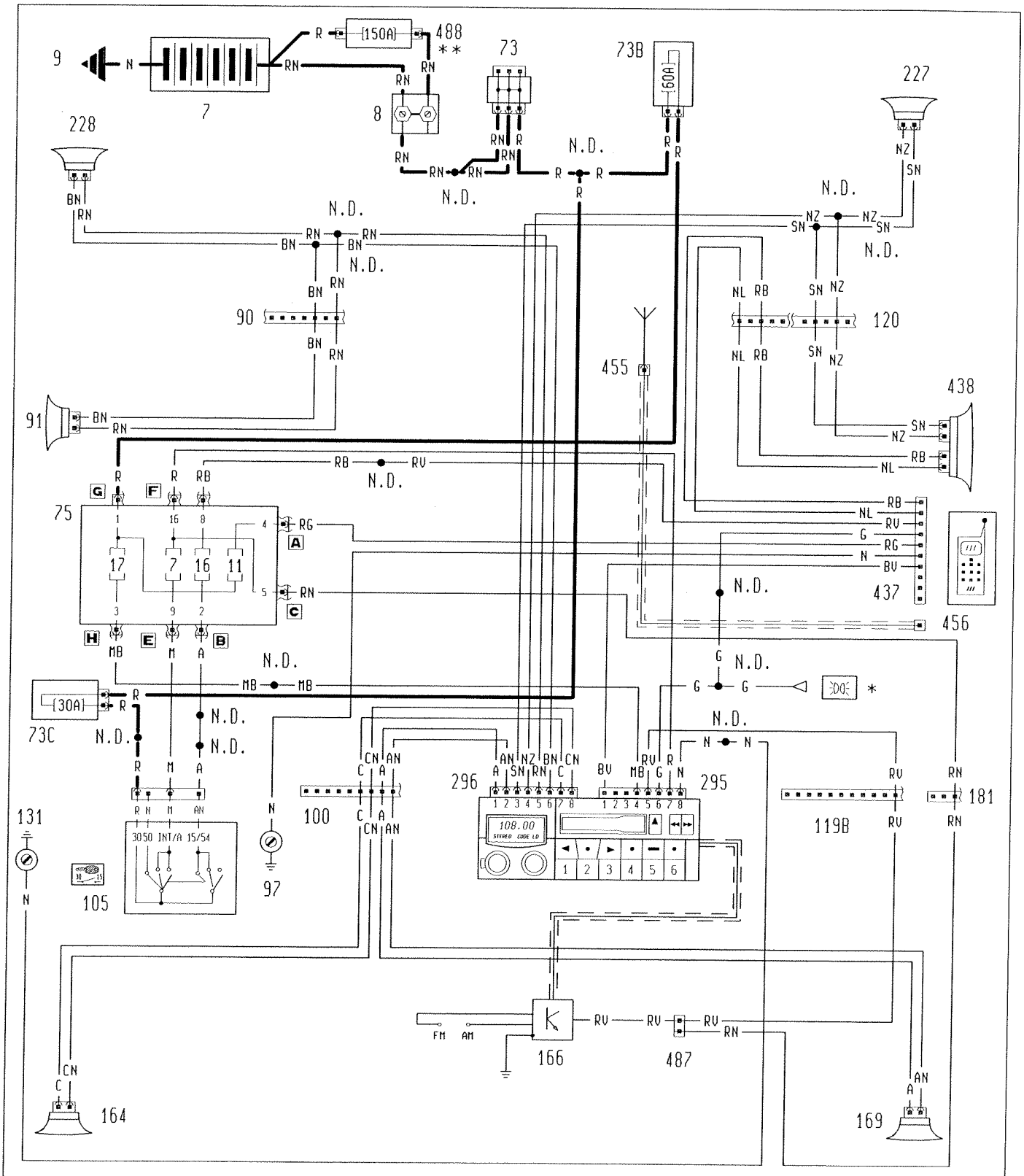

* See ideogram lights wiring diagram

** Variant connection for the 2387 JTD version

P3U10IZ01

Preparation for middle of the range radio - Preparation for radio phone - (See key at end of wiring diagrams)

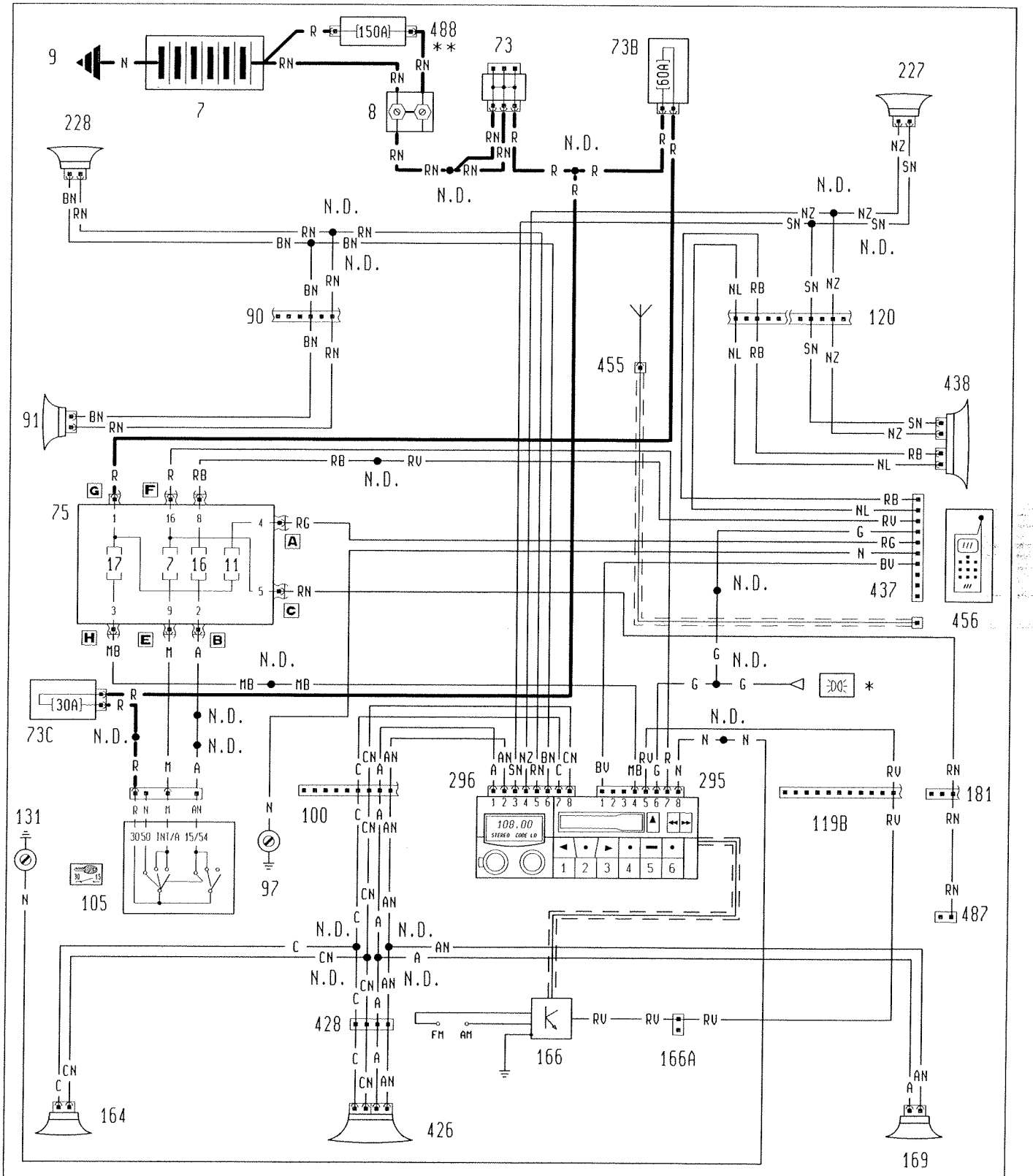

* See ideogram lights wiring diagram

** Variant connection for the 2387 JTD version

P3U11IZ01

Copyright by Fiat Auto

55.

Preparation for top of the range radio - Preparation for radio phone - (See key at end of wiring diagrams)

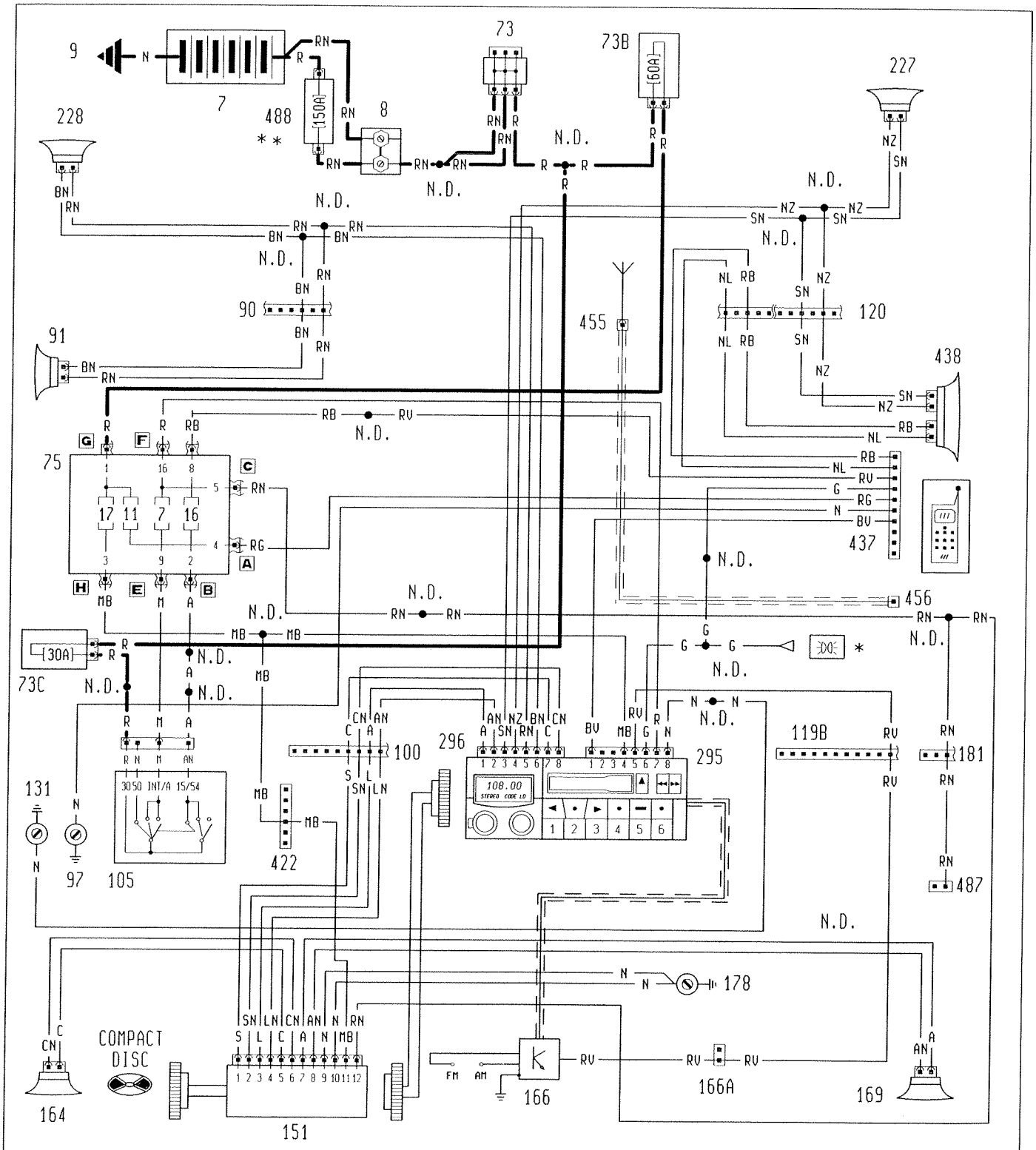

* See ideogram lights wiring diagram

** Variant connection for the 2387 JTD version

P3U12IZ01

Preparation for top of the range radio - Preparation for radio phone - (See key at end of wiring diagrams)

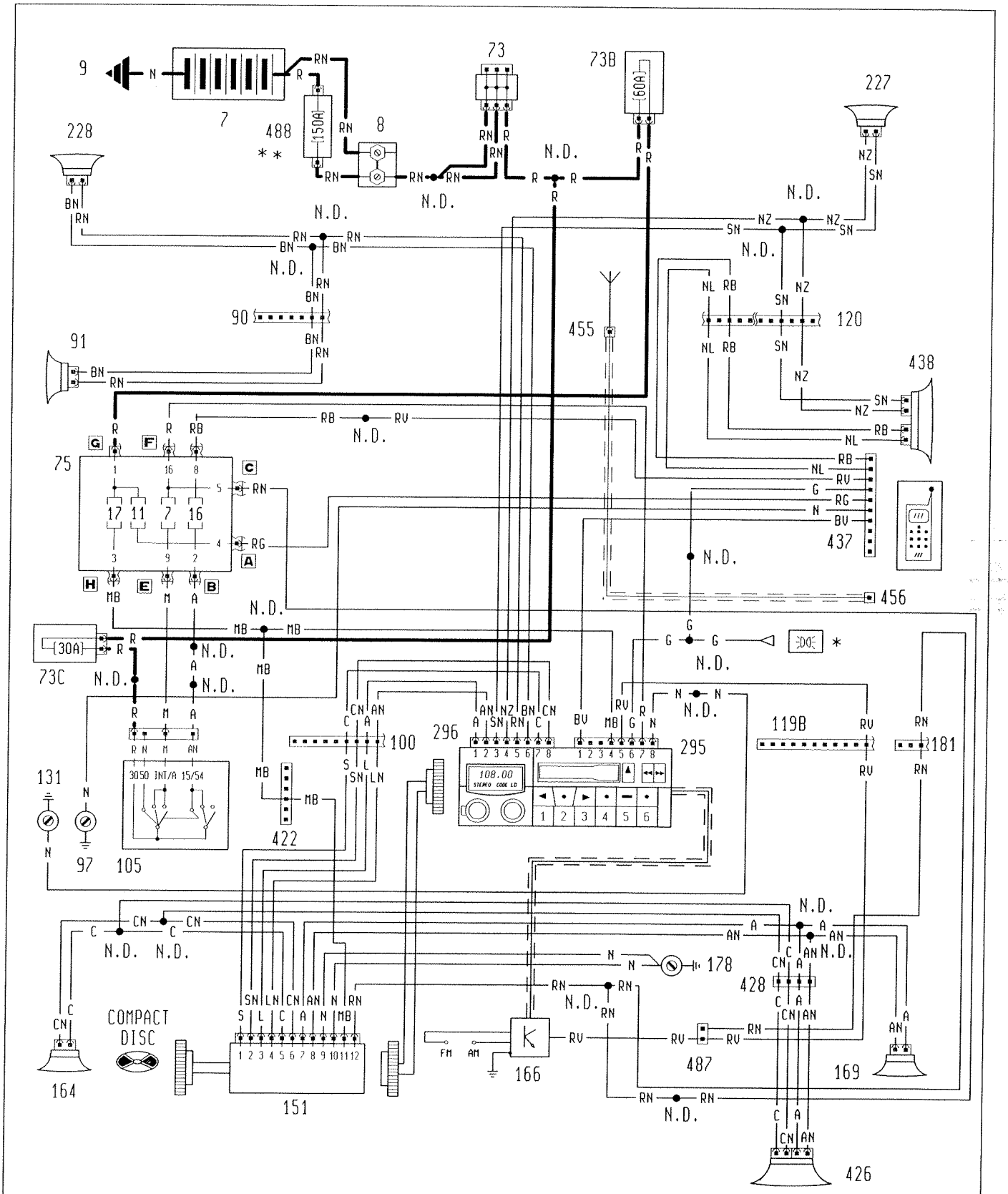

* See ideogram lights wiring diagram

** Variant connection for the 2387 JTD version

P3U13IZ01

Copyright by Fiat Auto

55.

Naturally aspirated petrol versions

Lancia CODE - (See key at end of wiring diagrams)

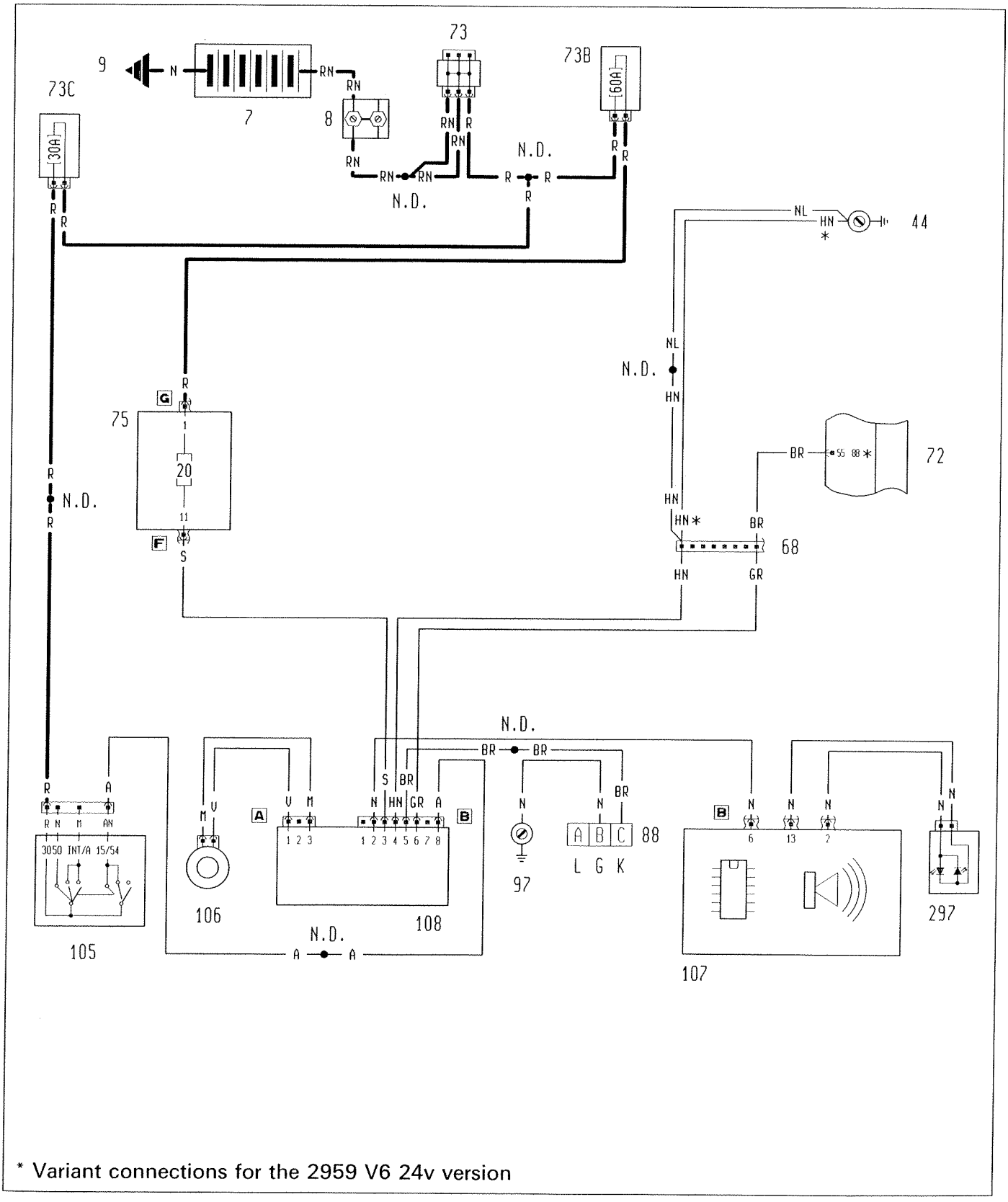

* Variant connections for the 2959 V6 24v version

P3U14IZ01

Turbo petrol versions

Lancia CODE- (See key at end of wiring diagrams)

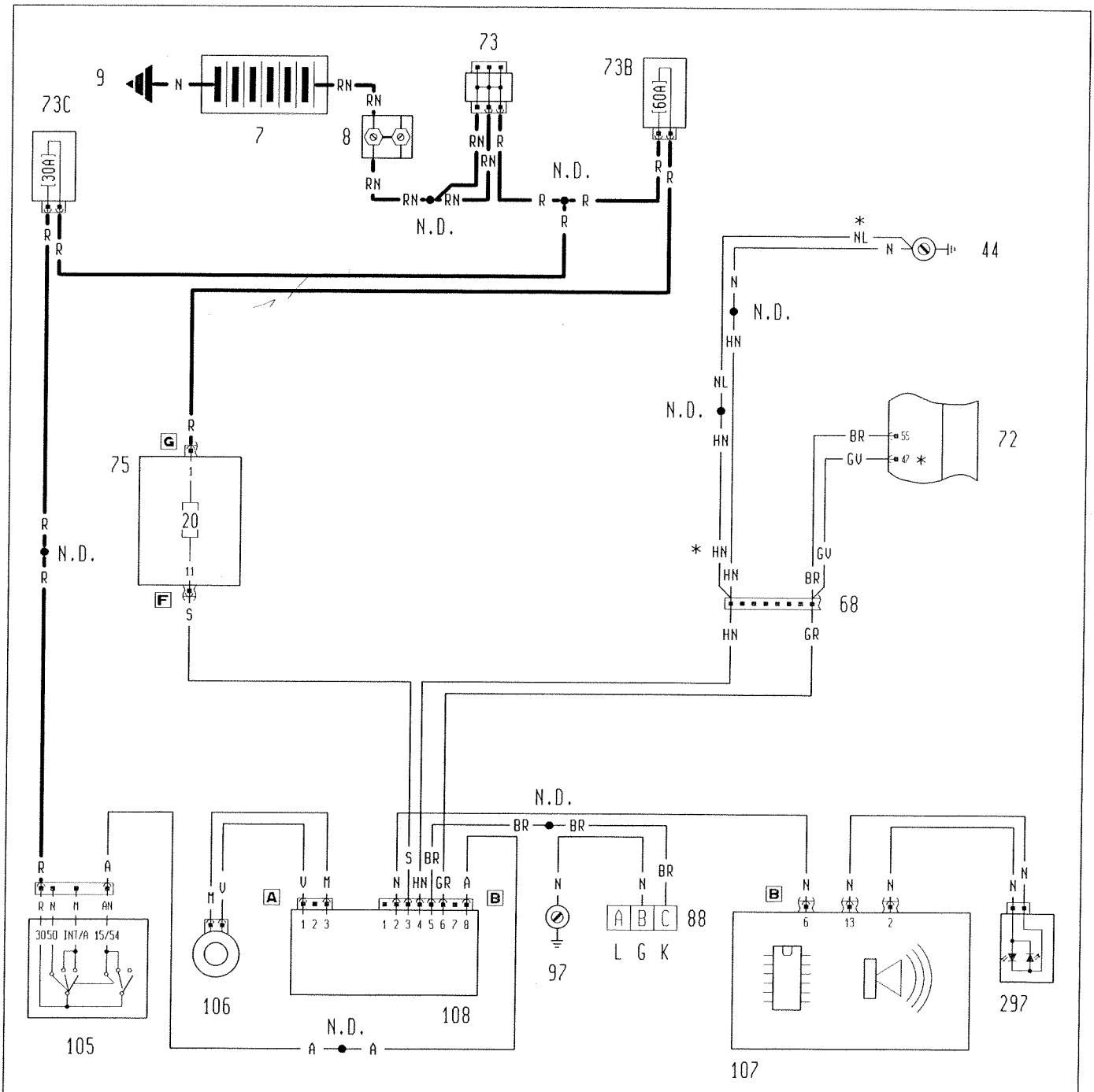

* Variant connections for the 1998 20v Turbo version

P3U15IZ01

55.

TD versions

Lancia CODE - (See key at end of wiring diagrams)

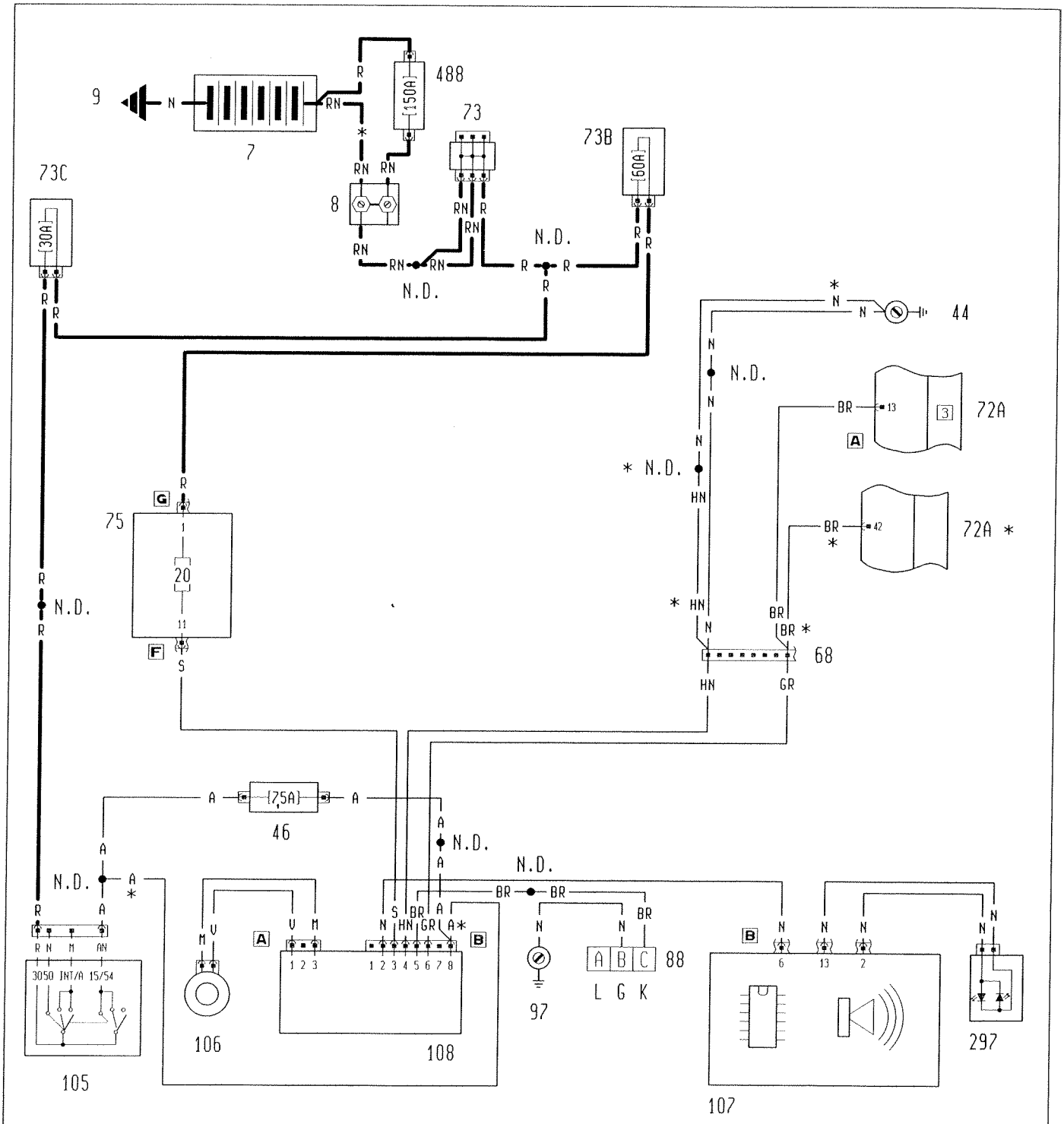

* Variant connections for the 2387 TD version

P3U16IZ01

Headlamp alignment - Electrically operated sun roof - (See key at end of wiring diagrams)

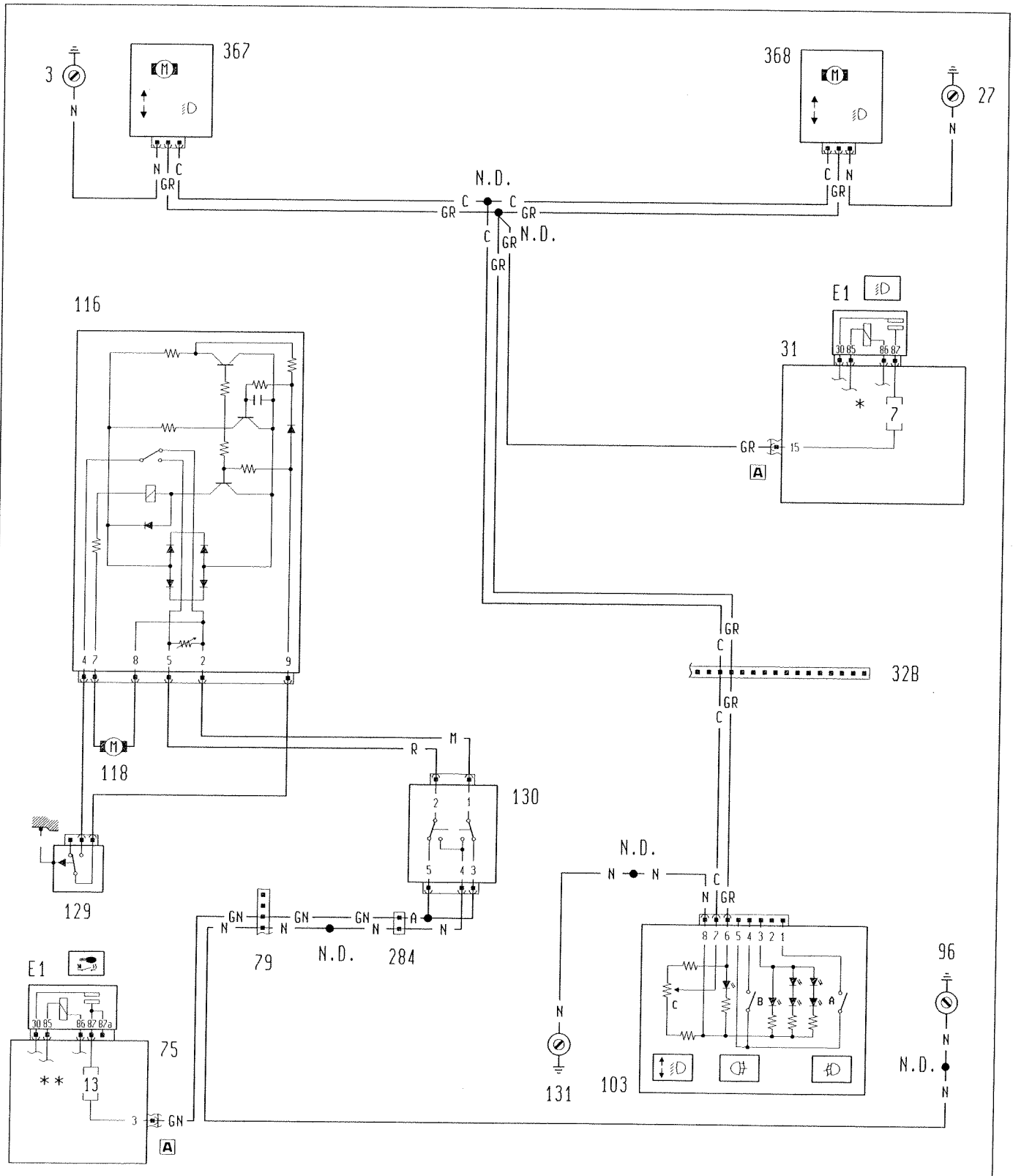

* See dipped headlamps wiring diagram ** See starting wiring diagram

P3U17IZ01

Copyright by Fiat Auto

55.

Anti-lock brakes (A.B.S.) - (See key at end of wiring diagrams)

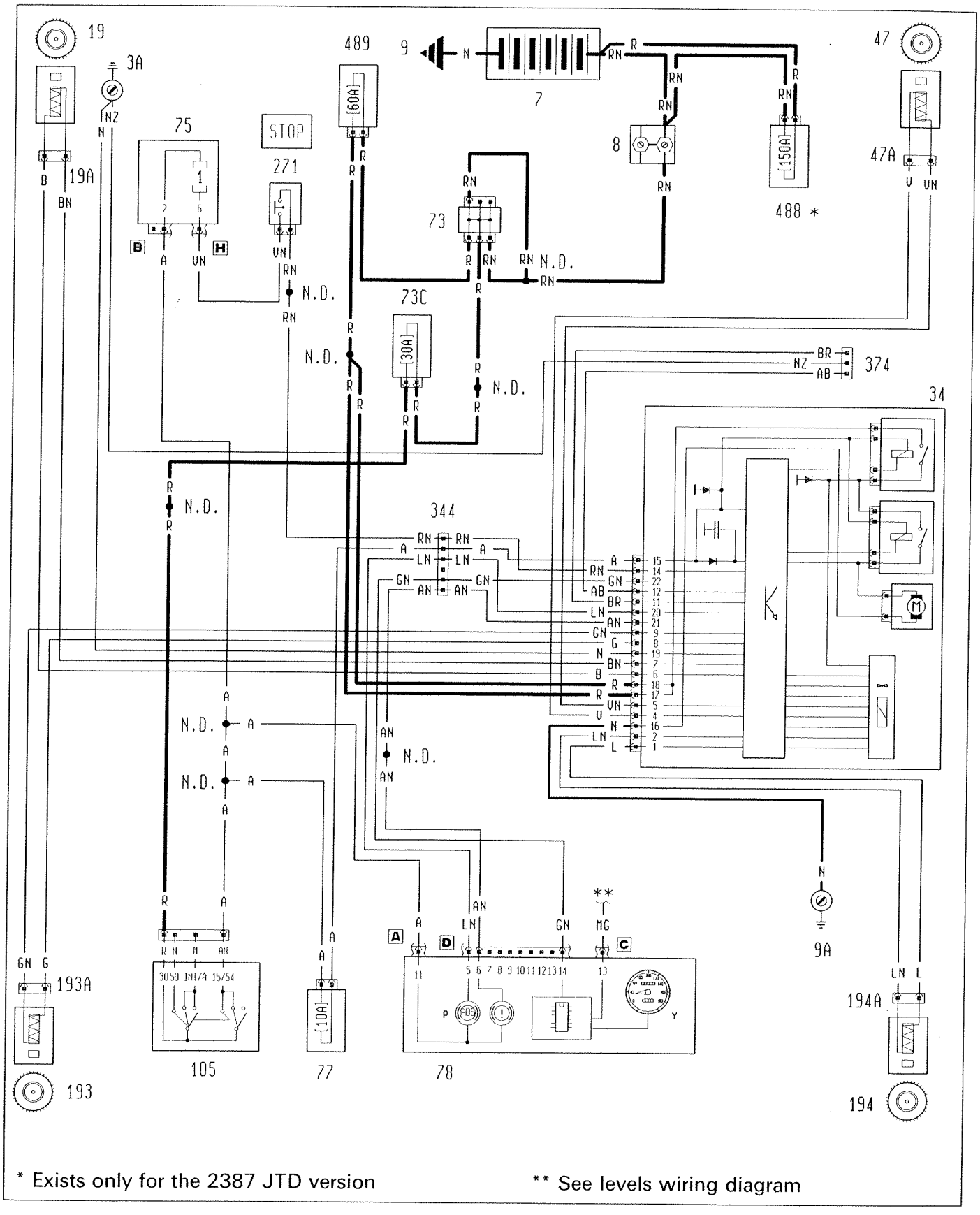

* Exists only for the 2387 JTD version

** See levels wiring diagram

P3U18IZ01

Preparation for tow hook - (See key at end of wiring diagrams)

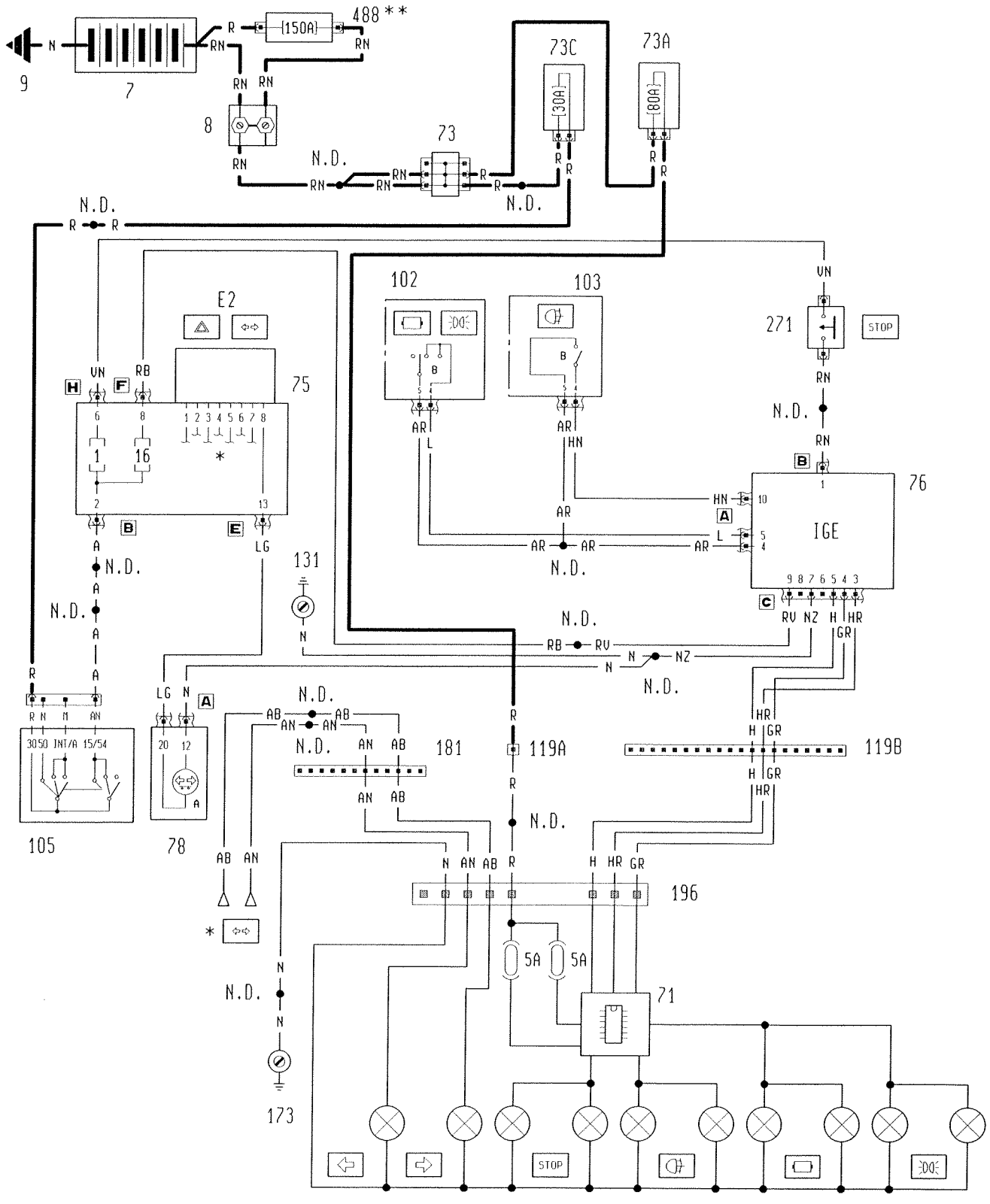

P3U19IZ01

55.

Automatic heater - (See key at end of wiring diagrams)

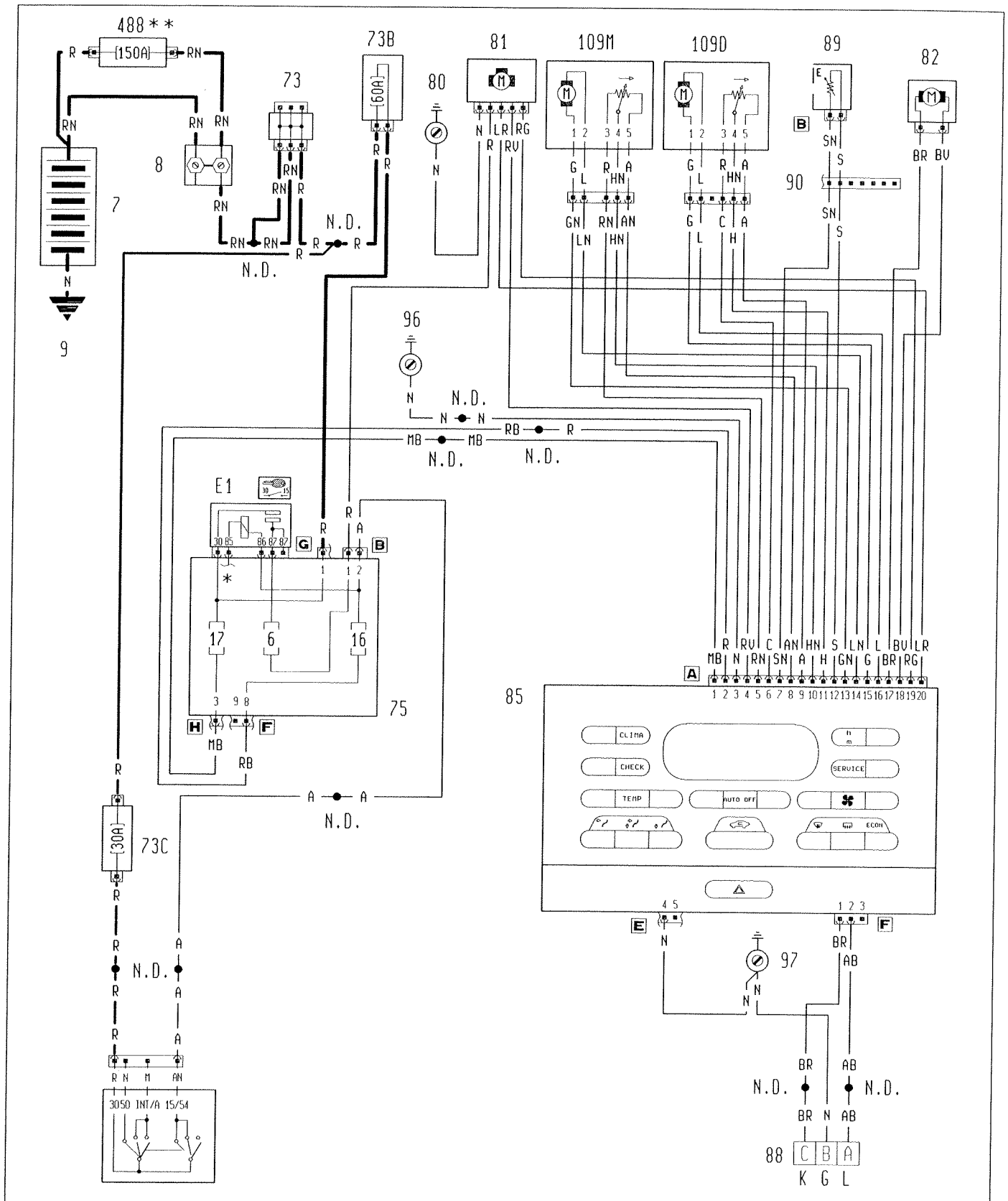

* See starting wiring diagram

** Variant connection for the 2387 JTD version

P3U20IZ01

Starting - Motronic M 2.7 electronic ignition and injection - Recharging and warning light - Insufficient engine oil pressure warning light - Injection system failure warning light - (See key at end of wiring diagrams)

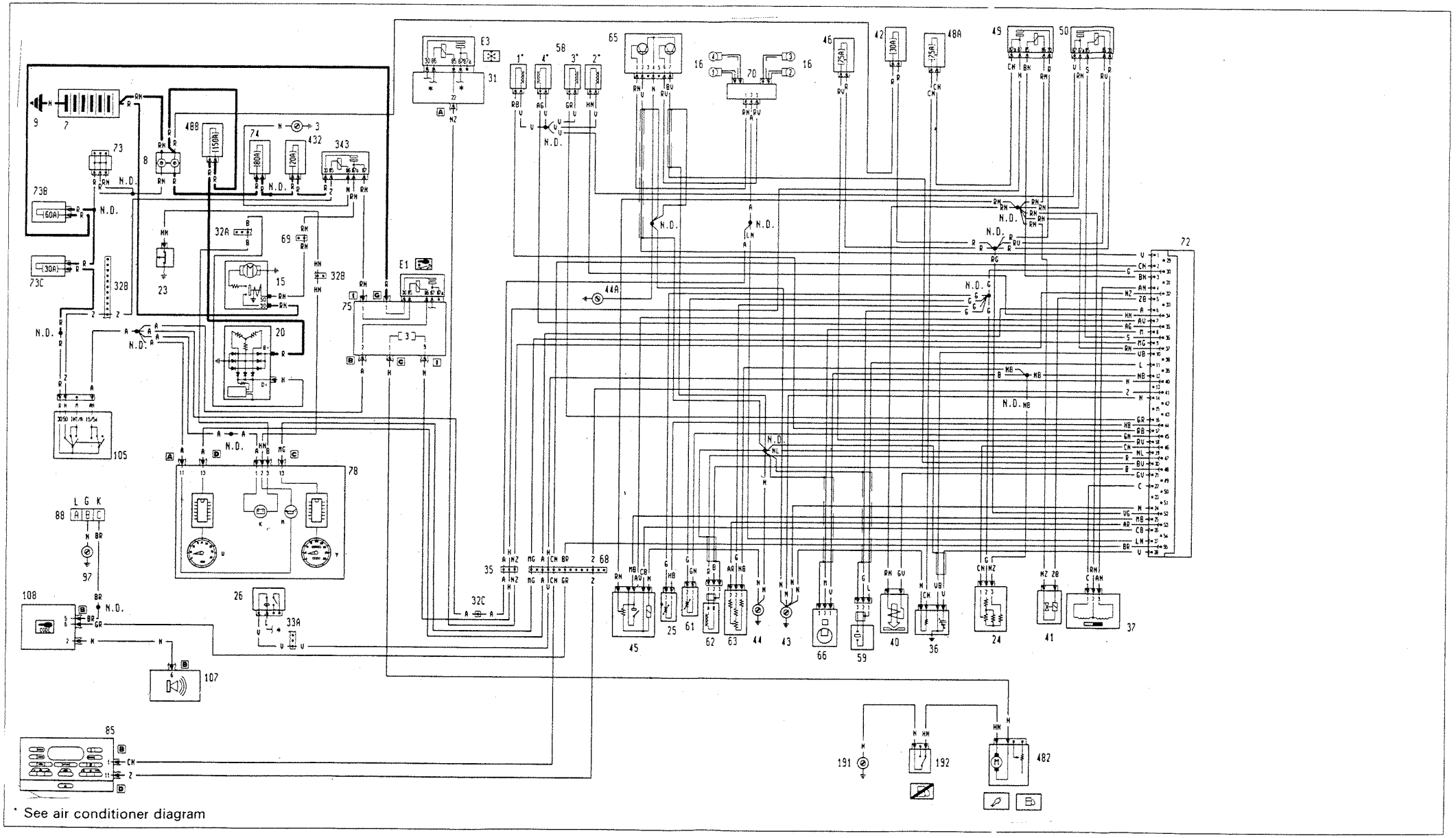

Copyright by Fiat Auto

55.

Starting - Motronic 2.10.3 electronic ignition and injection - Recharging and warning light - Insufficient engine oil pressure warning light - Injection system failure warning light - (See key at end of wiring diagrams)

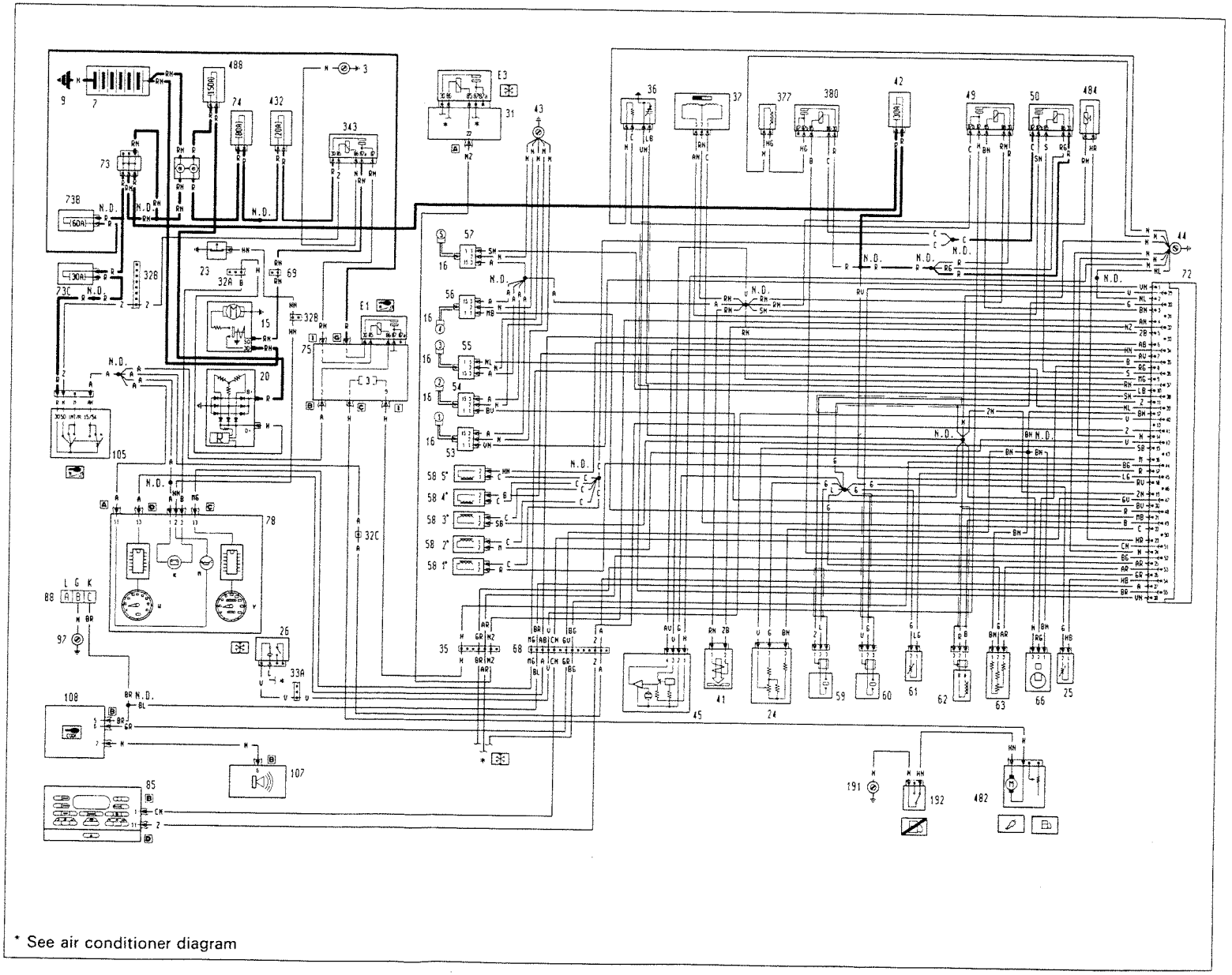

* See air conditioner diagram

P3U22IZ01

Starting - Motronic 2.10.3 electronic ignition and injection - Recharging and warning light - Insufficient engine oil pressure warning light - Injection system failure warning light - (See key at end of wiring diagrams)

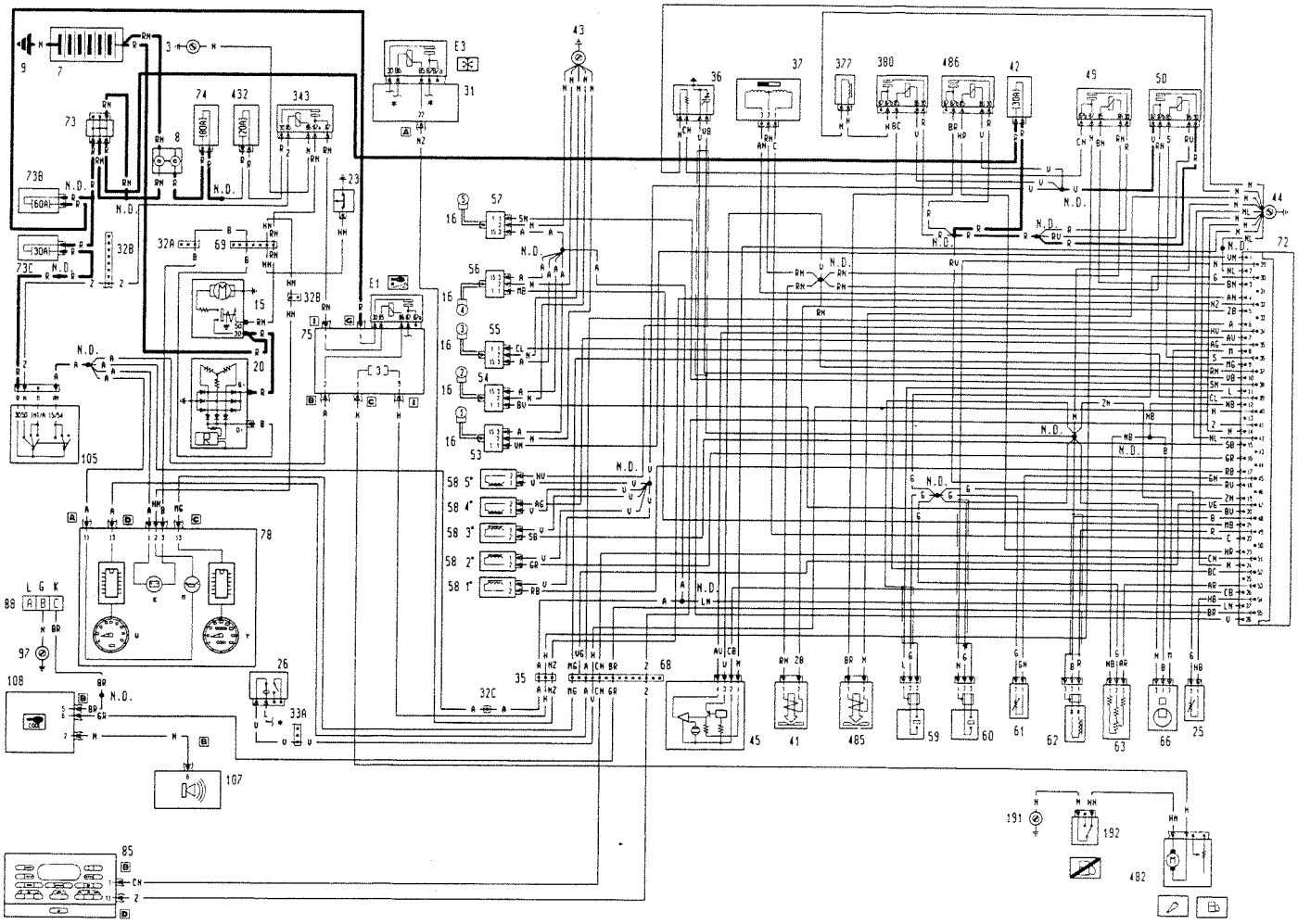

* See air conditioner diagram

P3U23IZ01

Copyright by Fiat Auto

55.

Version with automatic transmission

Starting - Motronic 2.10.3 electronic ignition and injection - Recharging and warning light - Insufficient engine oil pressure warning light - Injection system failure warning light - (See key at end of wiring diagrams)

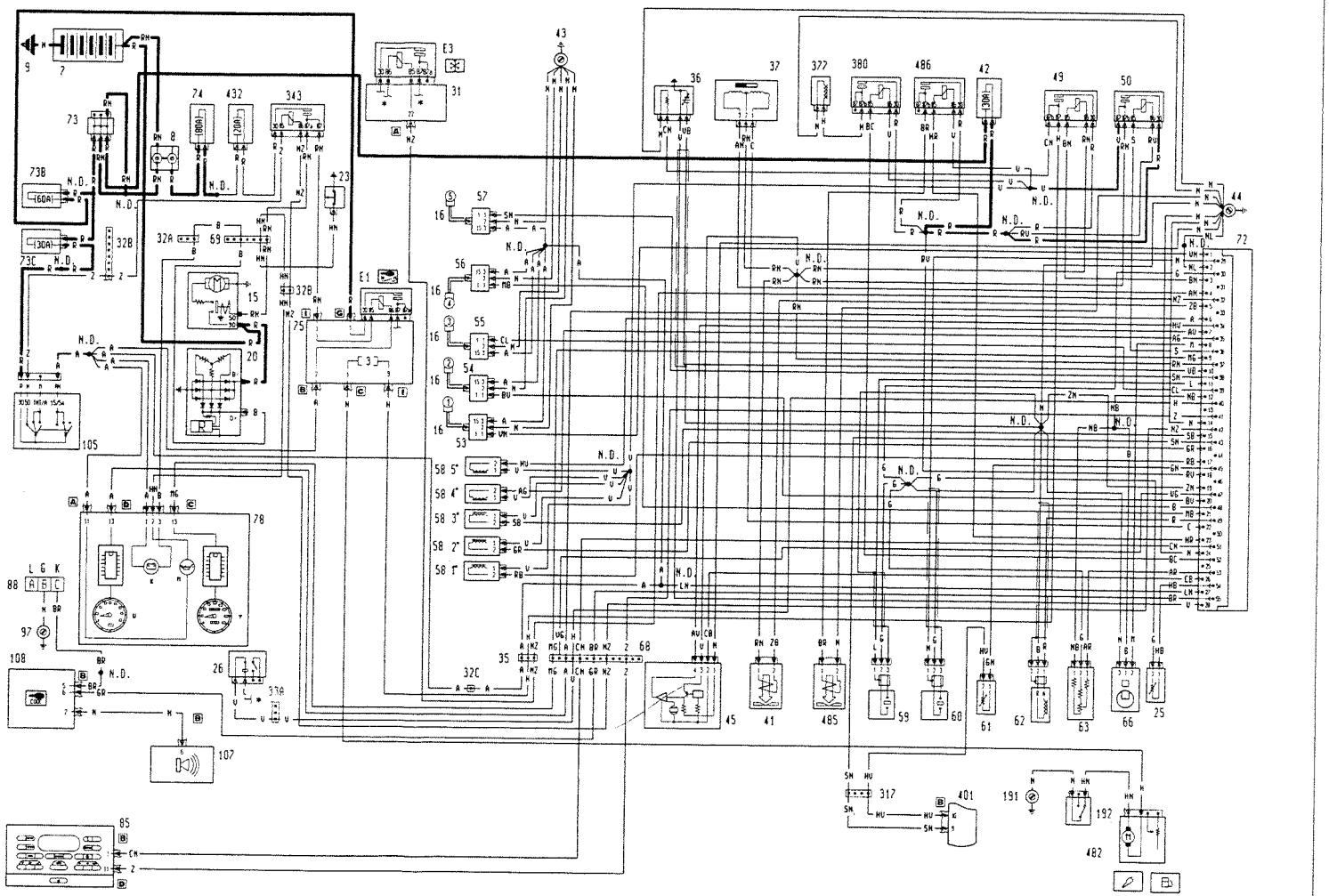

* See air conditioner diagram

P3U24IZ01

Starting - Motronic electronic ignition and injection - Recharging and warning light - Insufficient engine oil pressure warning light - Injection system failure warning light - (See key at end of wiring diagrams)

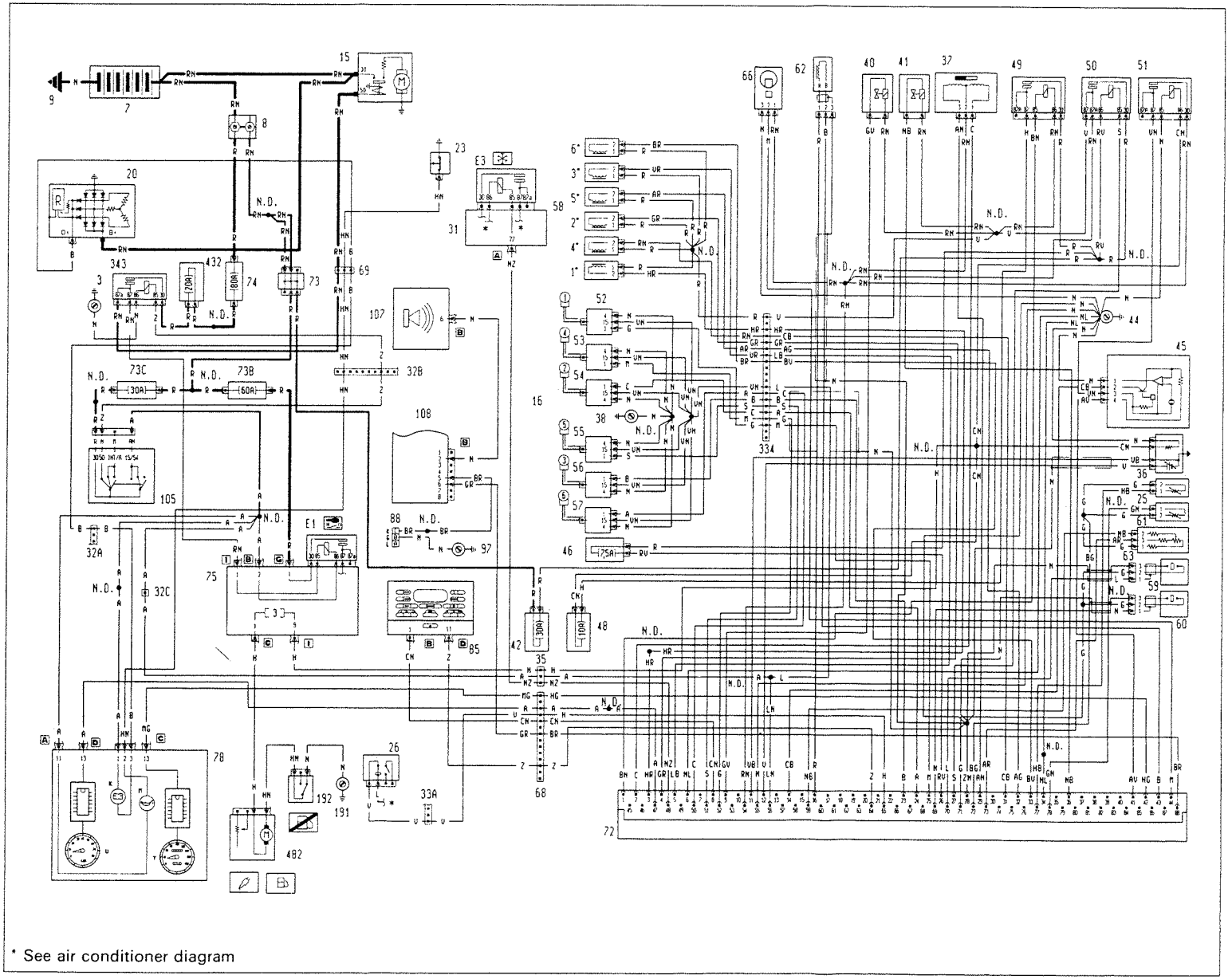

* See air conditioner diagram

P3U251Z01

Copyright by Fiat Auto

Version with automatic transmission

Starting - Motronic electronic ignition and injection - Recharging and warning light - Insufficient engine oil pressure warning light - Injection system failure warning light - (See key at end of wiring diagrams)

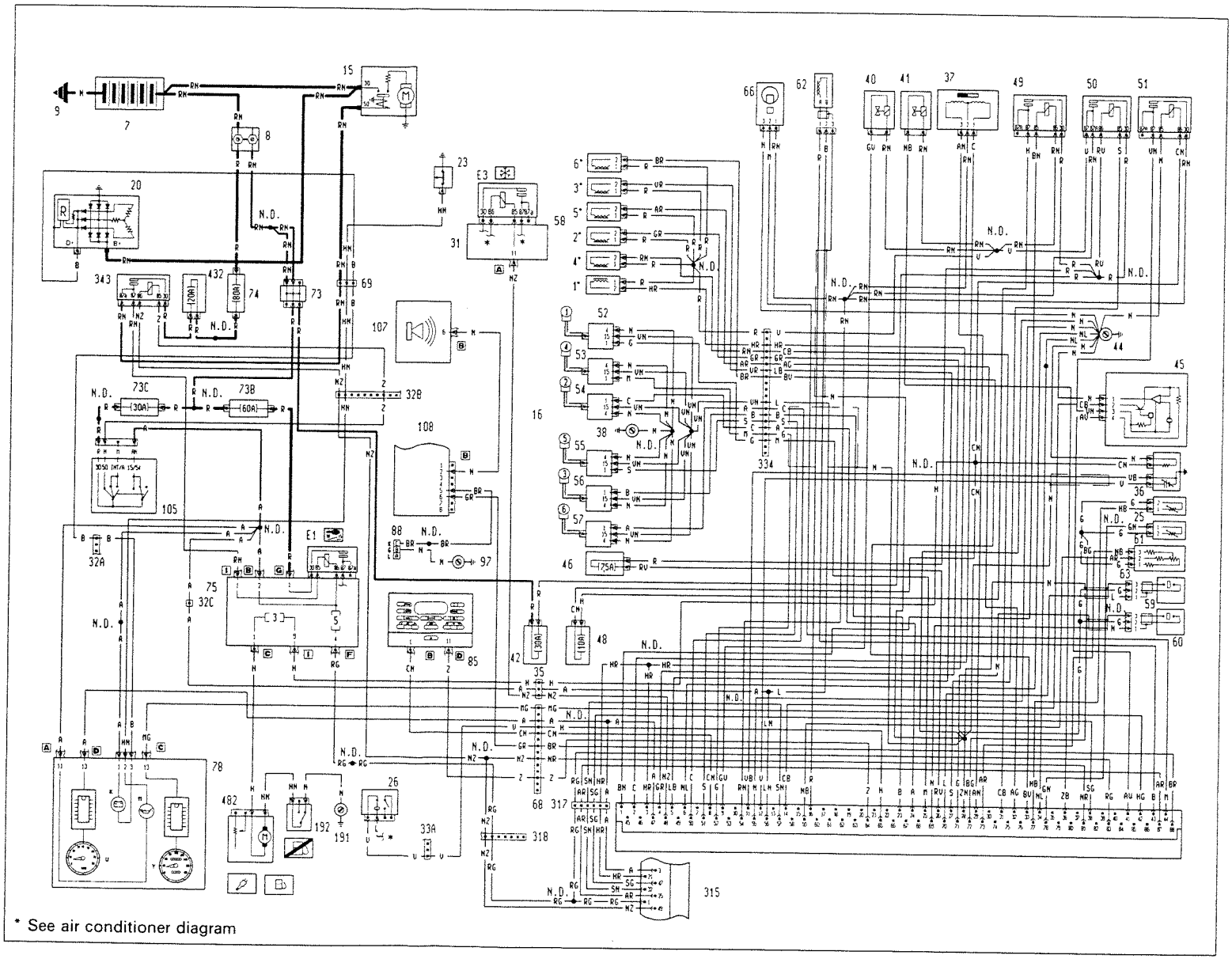

* See air conditioner diagram

P3U26IZ01

Starting - MSA11-310 fuel pump electronic control unit - Recharging and warning light - Insufficient engine oil pressure warning light - Injection system failure warning light - Heater plugs control unit and warning light - (See key at end of wiring diagrams)

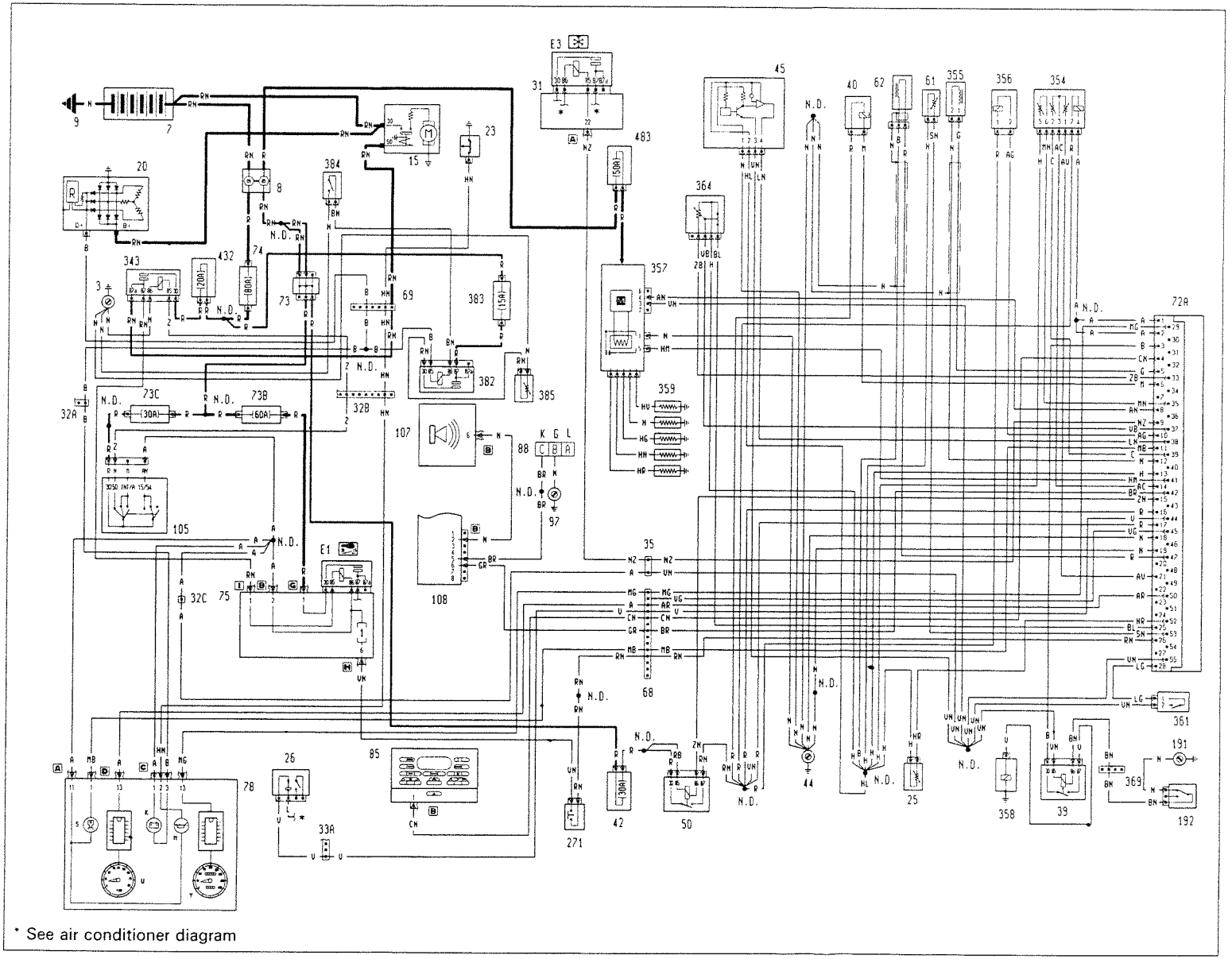

* See air conditioner diagram

P3U27IZ01

Copyright by Fiat Auto

55.

Starting - Diesel injection pressure pump electronic control unit - Recharging and warning light - Insufficient engine oil pressure warning light - Injection system failure warning light - Heater plugs control unit and warning light - (See key at end of wiring diagrams)

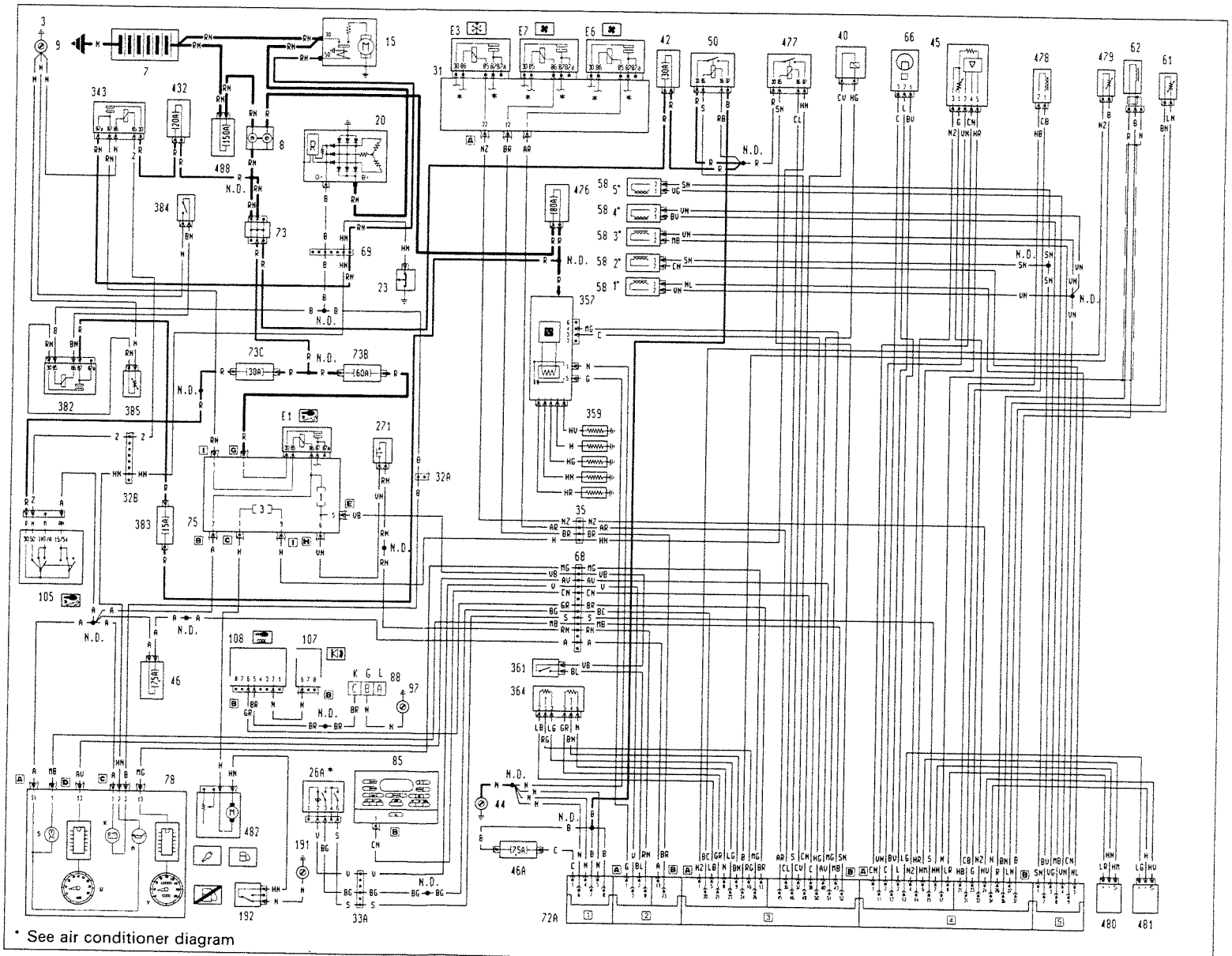

Side lights and warning light - Dipped headlamps and warning light - Main beam headlamps and warning light - Parking lights - Headlamp flasher - Number plate lights - (See key at end of wiring diagrams)

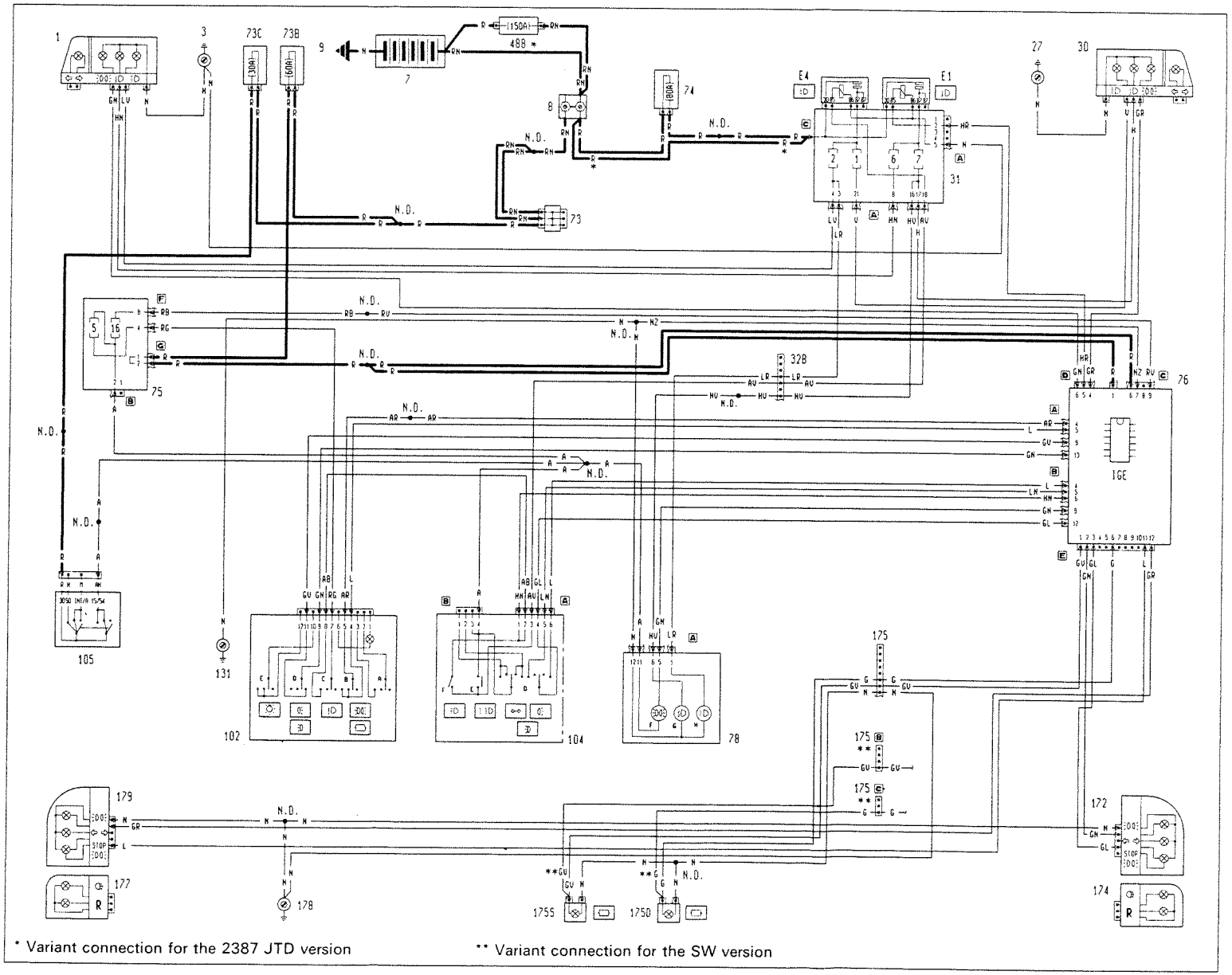

P3U28IZ01

Copyright by Fiat Auto

55.

Direction indicators and warning light - Hazard warning lights and warning light - Braking lights - Reversing lights - (See key at end of wiring diagrams)

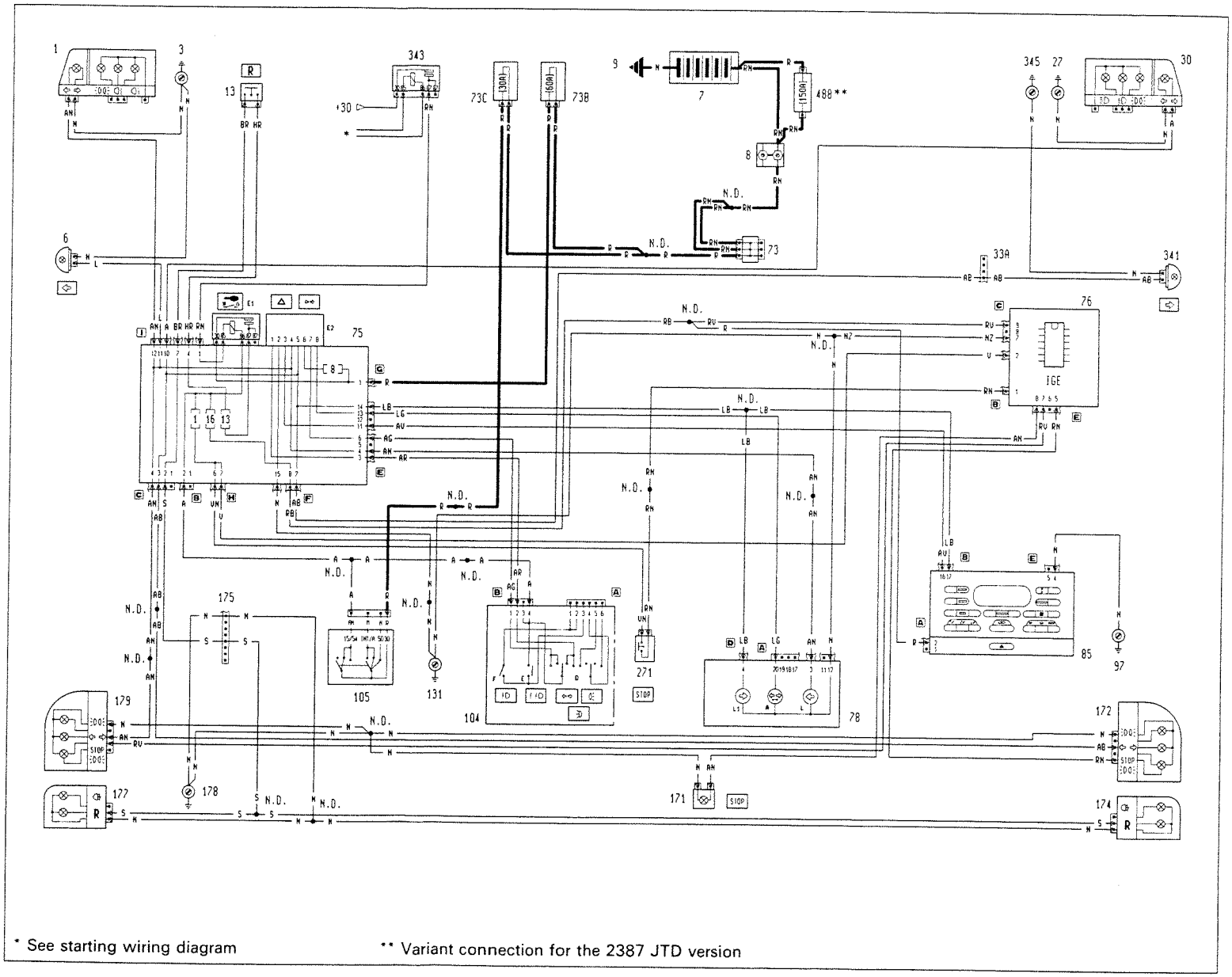

* See starting wiring diagram

** Variant connection for the 2387 JTD version

P3U30IZ01

Direction indicators and warning light - Hazard warning lights and warning light - Braking lights - Reversing lights - (See key at end of wiring diagrams)

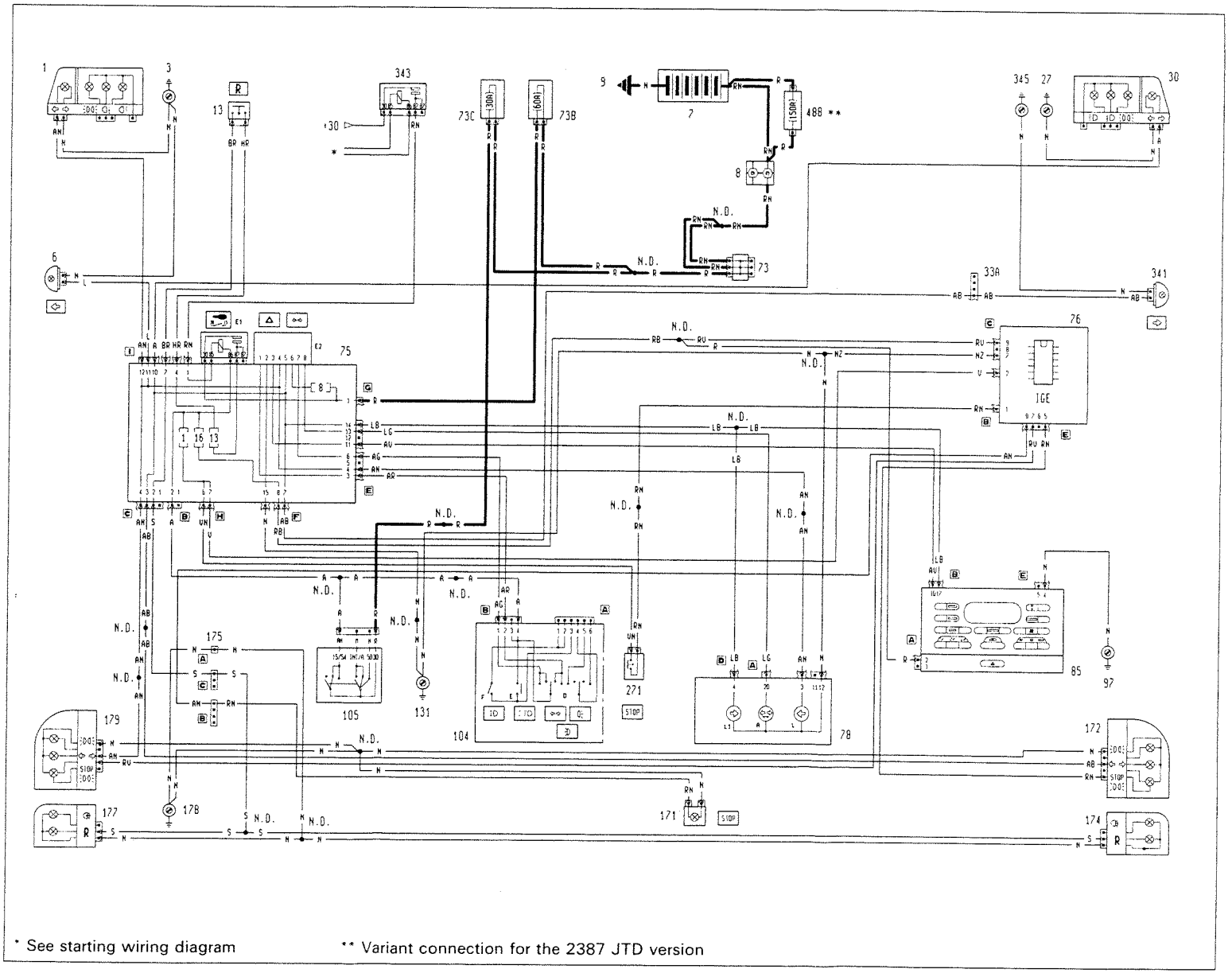

Copyright by Fiat Auto

55.

Fog lights and warning light - Rear fog lamps and warning light - (See key at end of wiring diagrams)

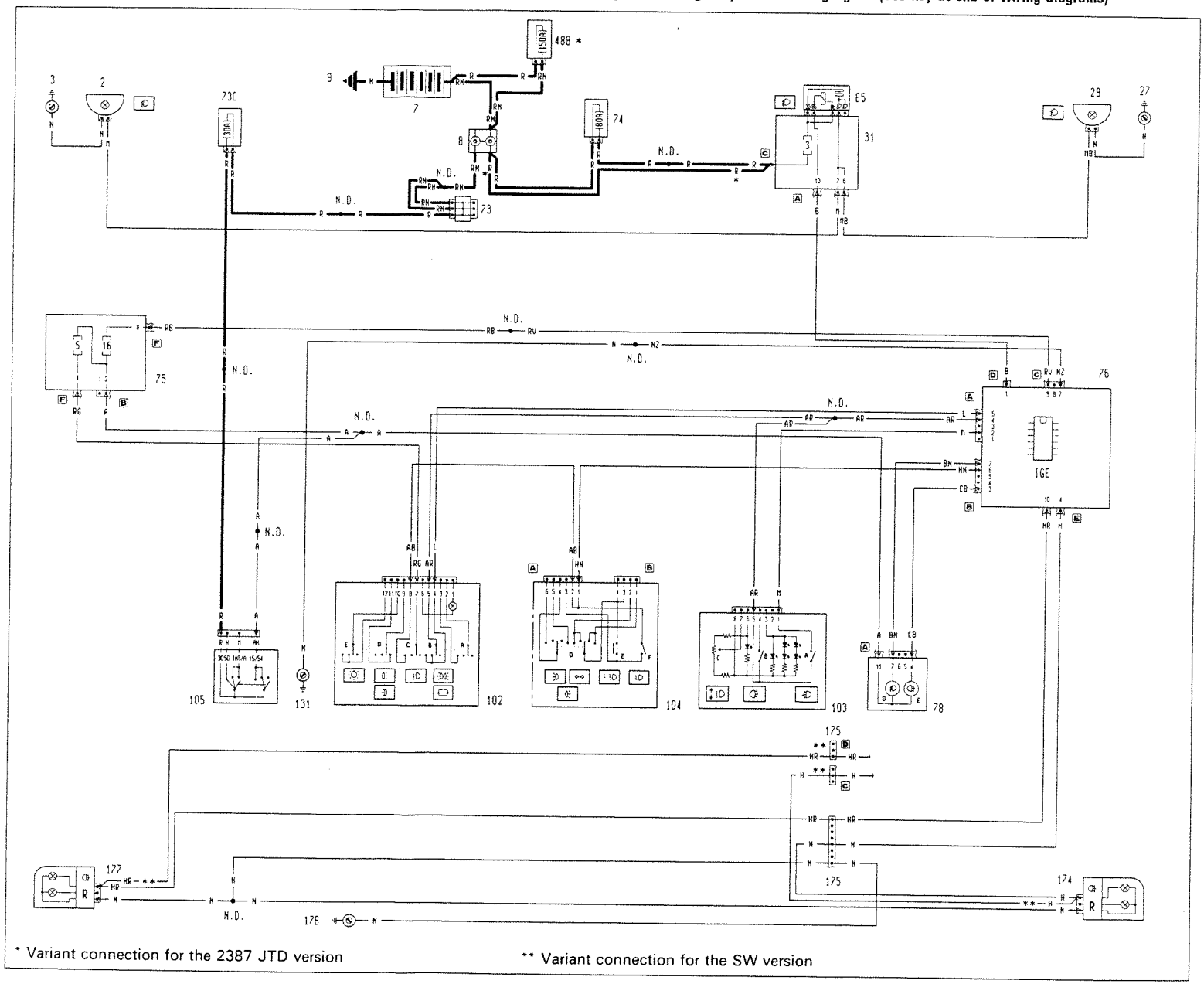

* Variant connection for the 2387 JTD version

** Variant connection for the SW version

P3U32IZ01

Windscreen wash/wipe - Headlamp washer - Electric horns - (See key at end of wiring diagrams)

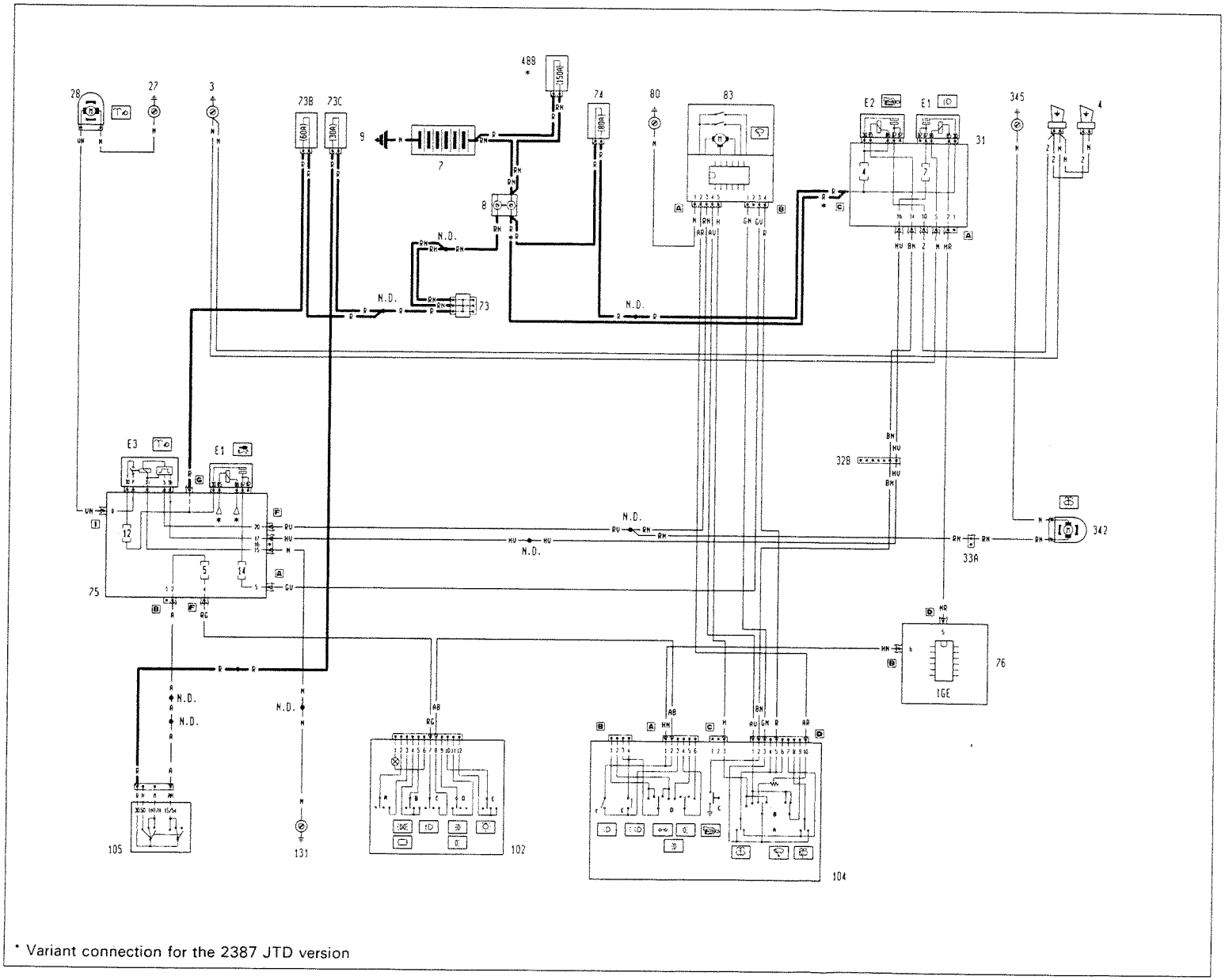

* Variant connection for the 2387 JTD version

Copyright by Fiat Auto

55.

Windscreen wash/wipe - Headlamp washer - Electric horns - (See key at end of wiring diagrams)

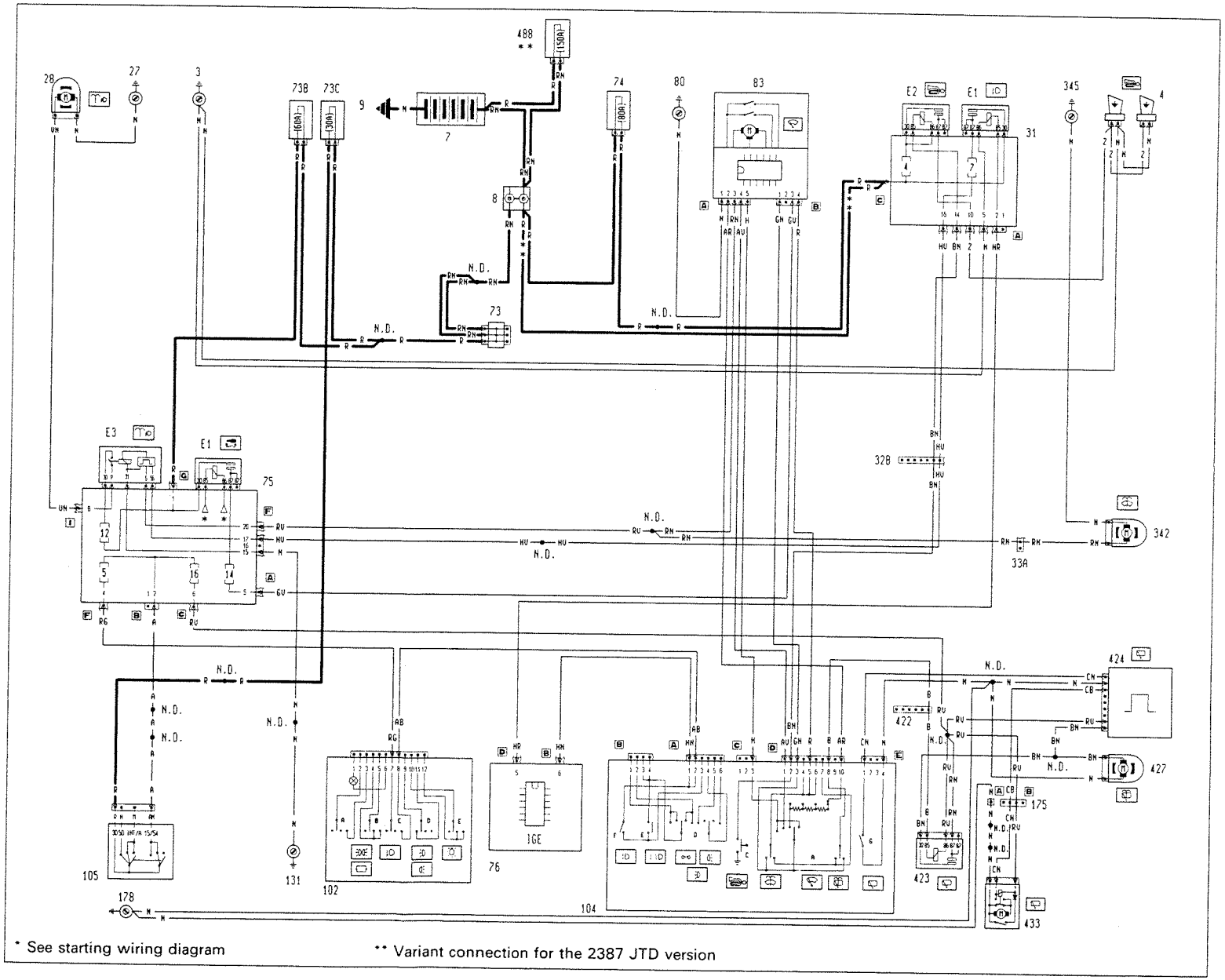

* See starting wiring diagram

** Variant connection for the 2387 JTD version

P3U34IZ01

Vehicle interior lights - (See key at end of wiring diagrams)

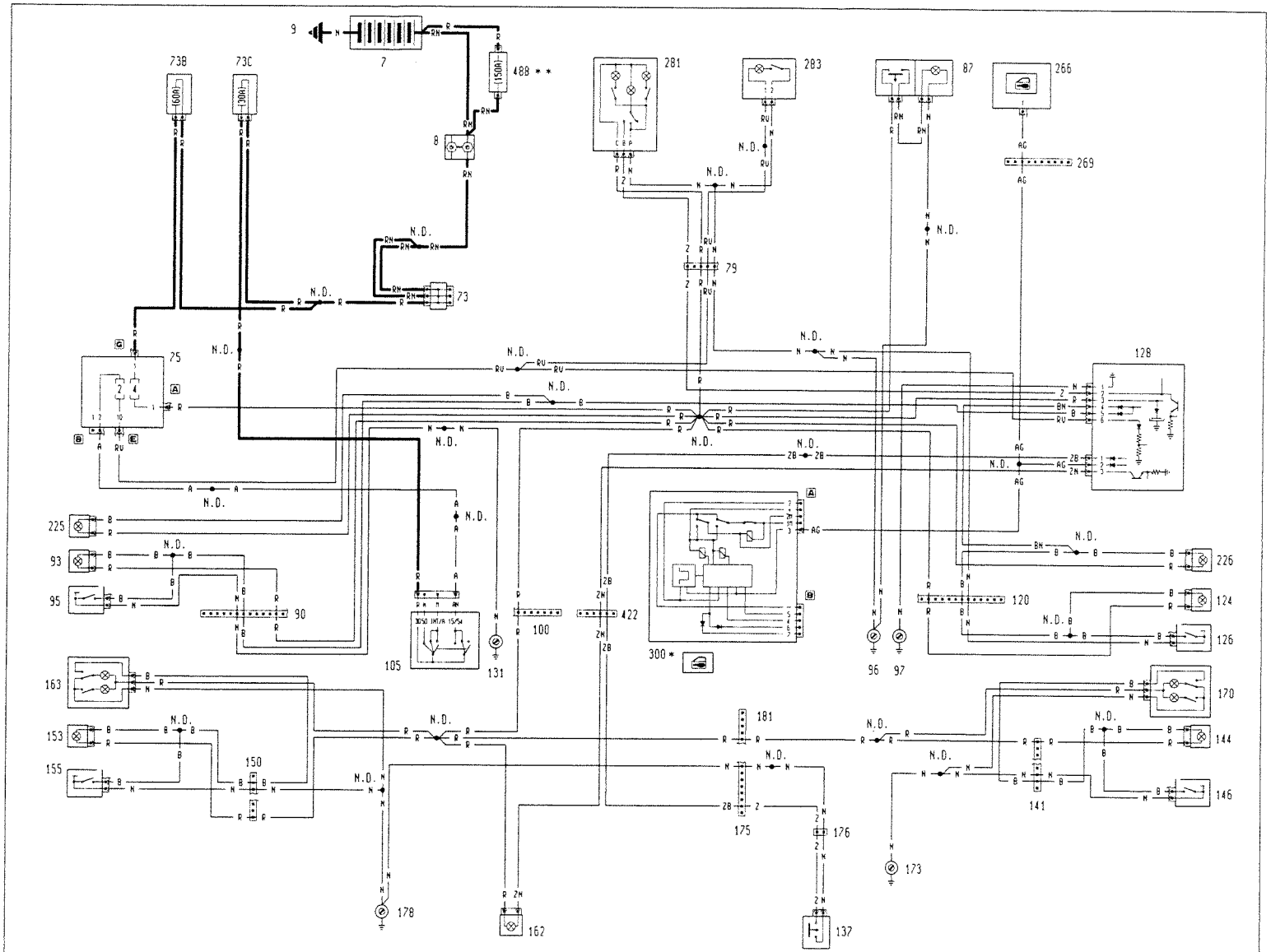

* See central locking wiring diagram

** Variant connection for the 2387 JTD version

P3U35IZ01

Copyright by Fiat Auto

Vehicle interior lights - (See key at end of wiring diagrams)

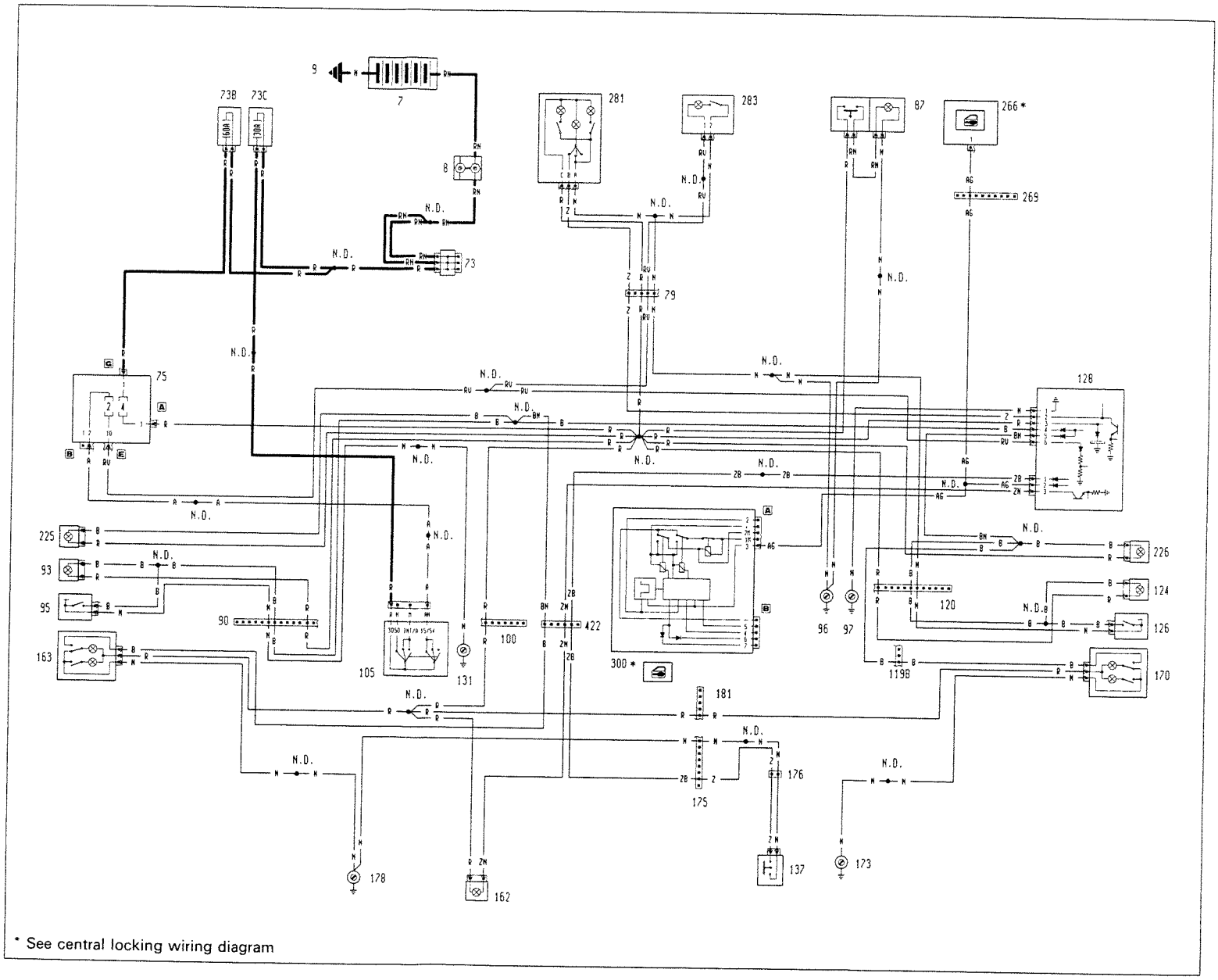

* See central locking wiring diagram

P3U36IZ01

Vehicle interior lights - (See key at end of wiring diagrams)

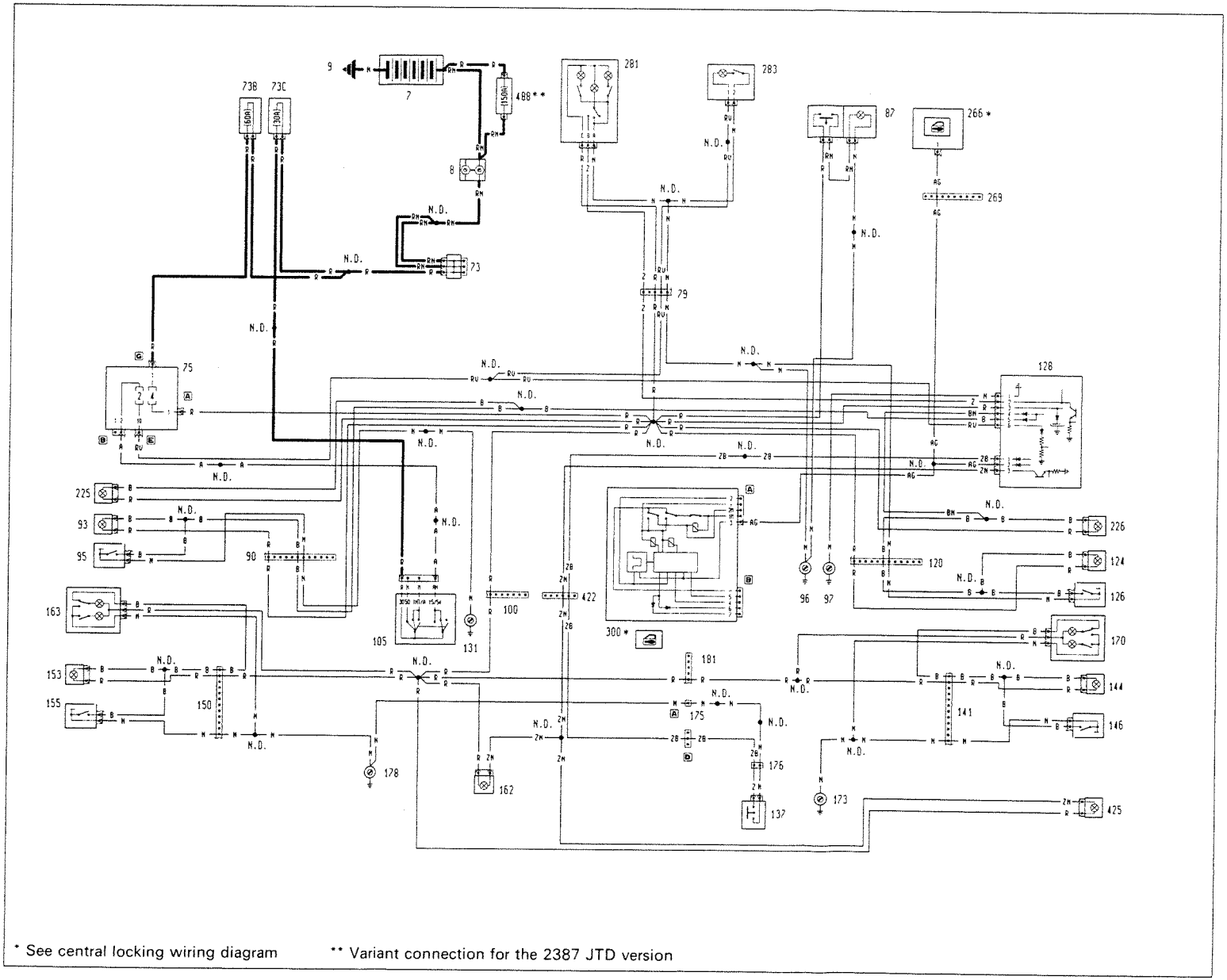

* See central locking wiring diagram

** Variant connection for the 2387 JTD version

P3U37IZ01

Copyright by Fiat Auto

55.

Petrol versions

Fuel level gauge and reserve warning light - Handbrake warning light - Insufficient brake fluid level warning light - Seat belt unfastened warning light - Speedometer - Milometer/trip meter and zeroing button - Rev counter -Current socket- Voltmeter- (See key at end of wiring diagrams)

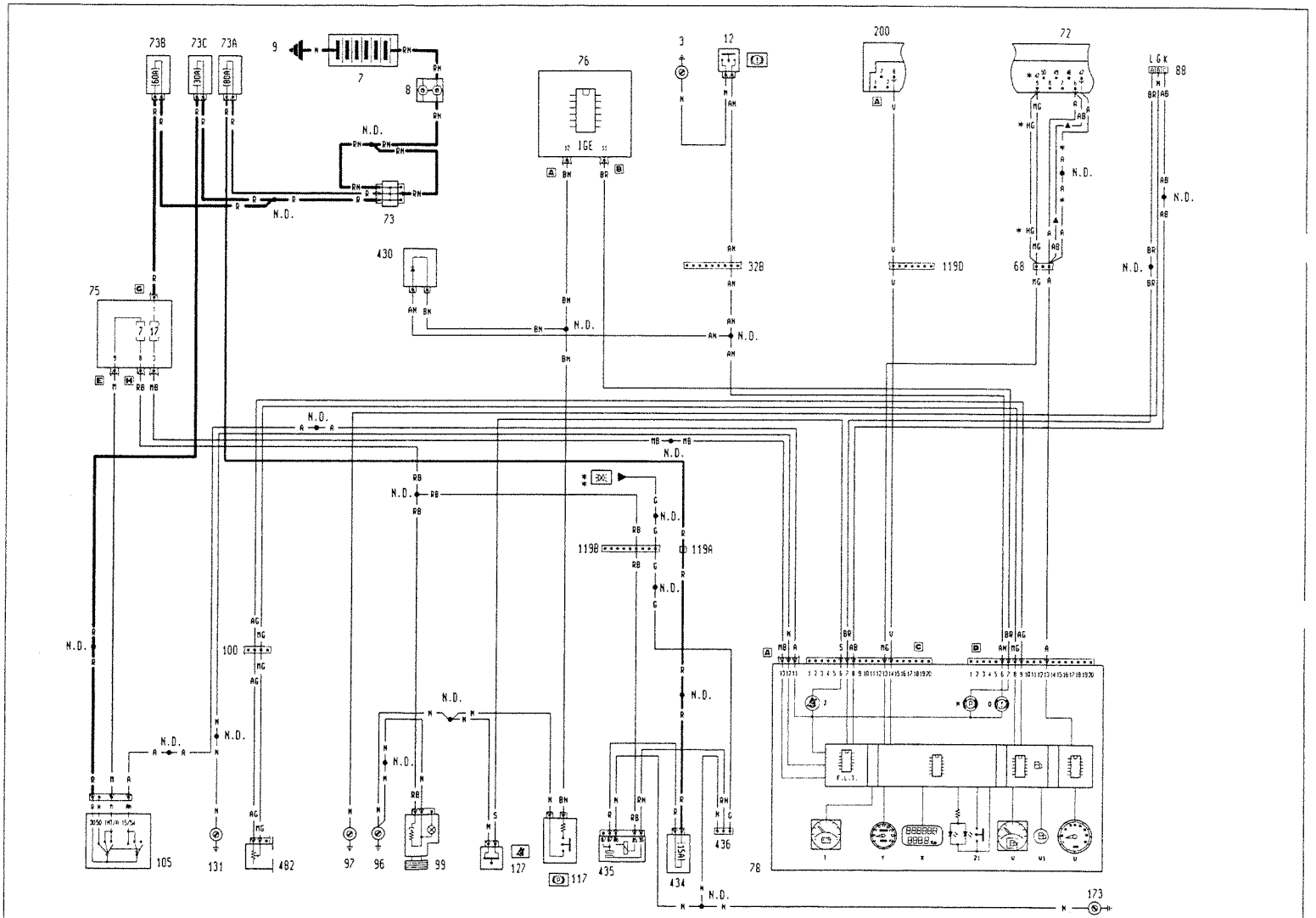

* Variant connections for the 2959 V6 24v version
** See ideogram lights wiring diagram
▲ Variant connections for the 1998 20v Turbo version

P3U38IZ01

Diesel versions

Fuel level gauge and reserve warning light - Handbrake warning light - Insufficient brake fluid level warning light - Seat belt unfastened warning light - Speedometer - Milometer/trip meter and zeroing button - Rev counter -Current socket- Voltmeter- (See key at end of wiring diagrams)

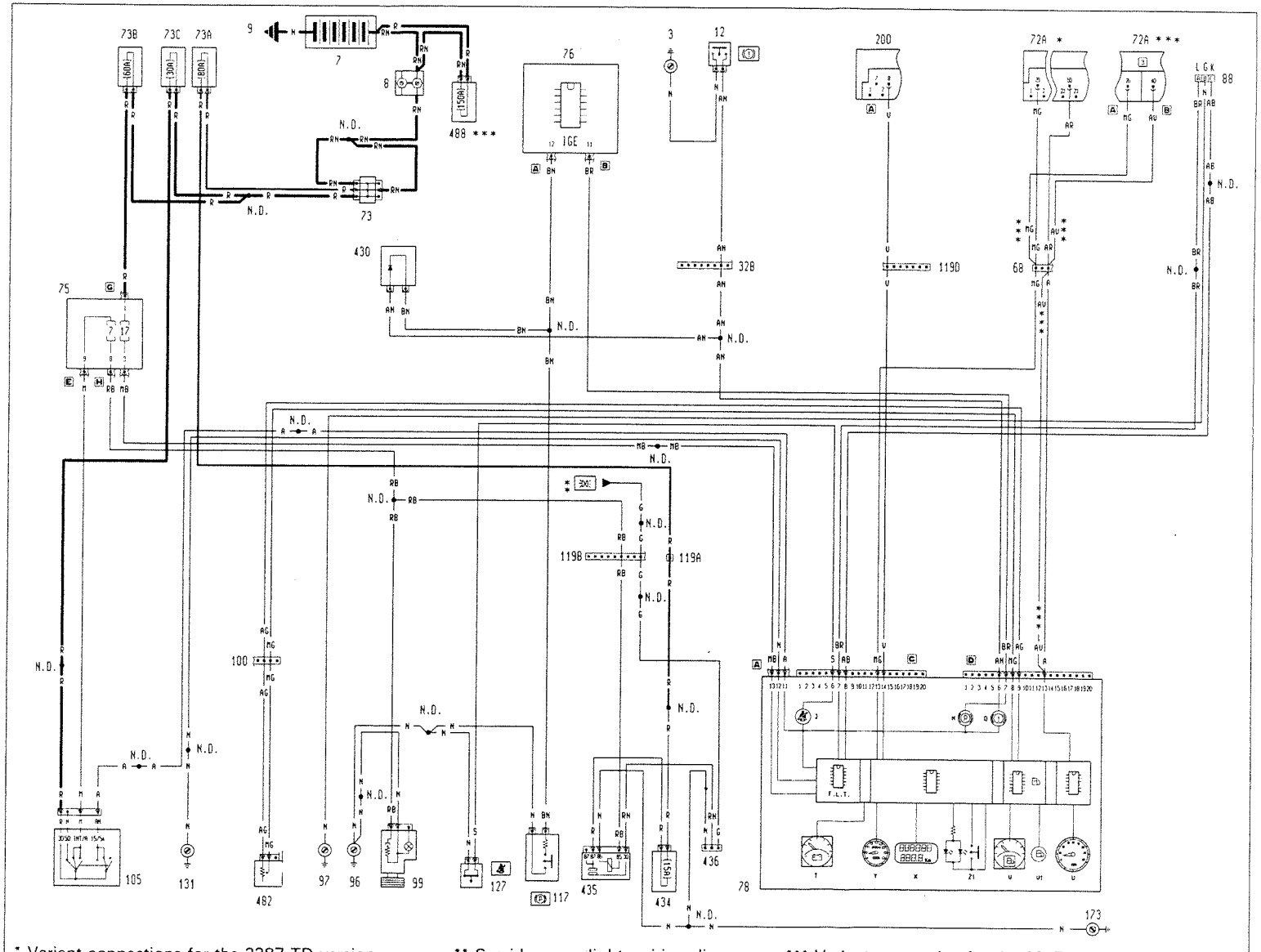

* Variant connections for the 2387 TD version

** See ideogram lights wiring diagram

*** Variant connection for the 2387 JTD version

P3U39IZ01

Copyright by Fiat Auto

55.

Electric front windows - (See key at end of wiring diagrams)

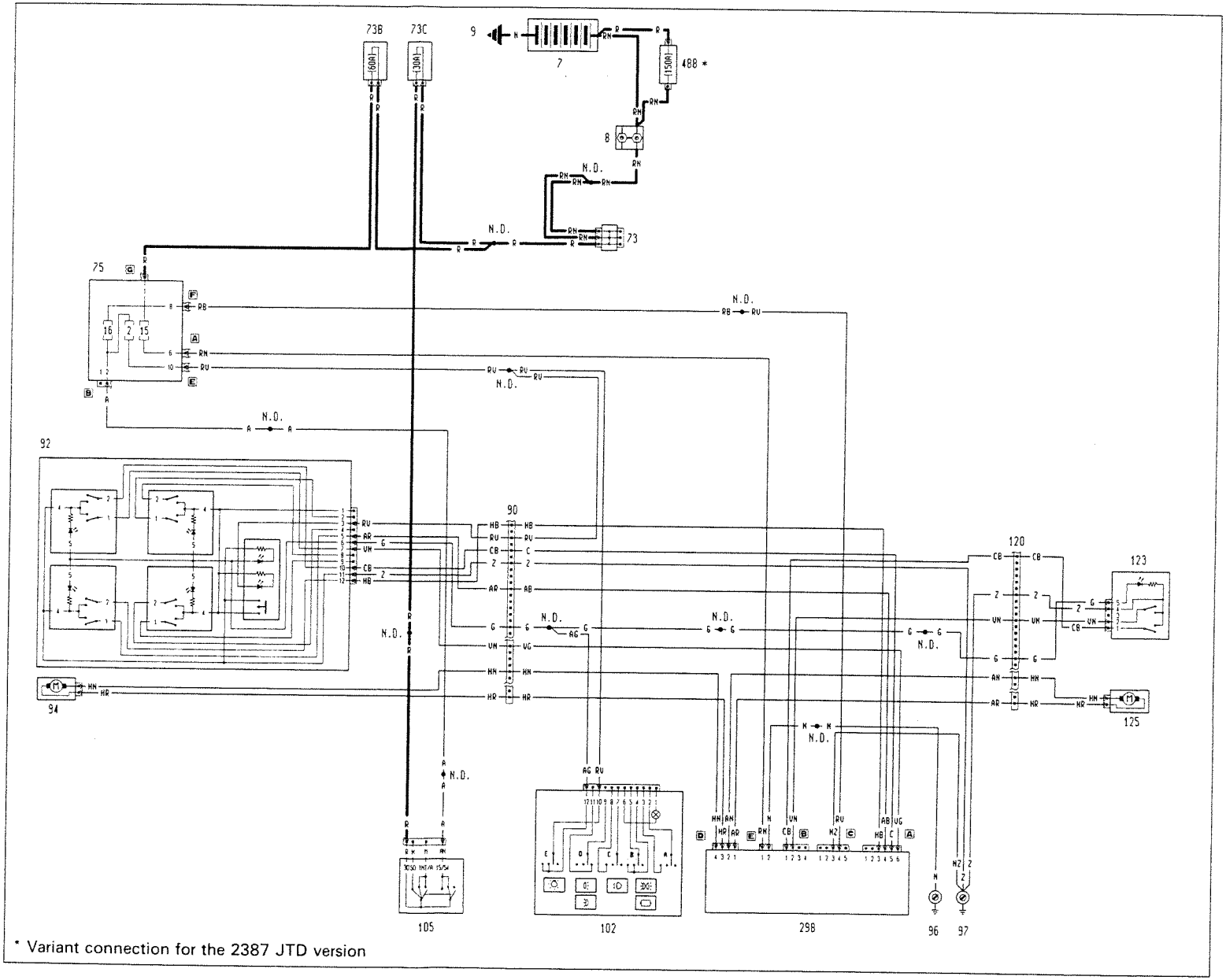

* Variant connection for the 2387 JTD version

P3U40IZ01

Electric front windows - (See key at end of wiring diagrams)

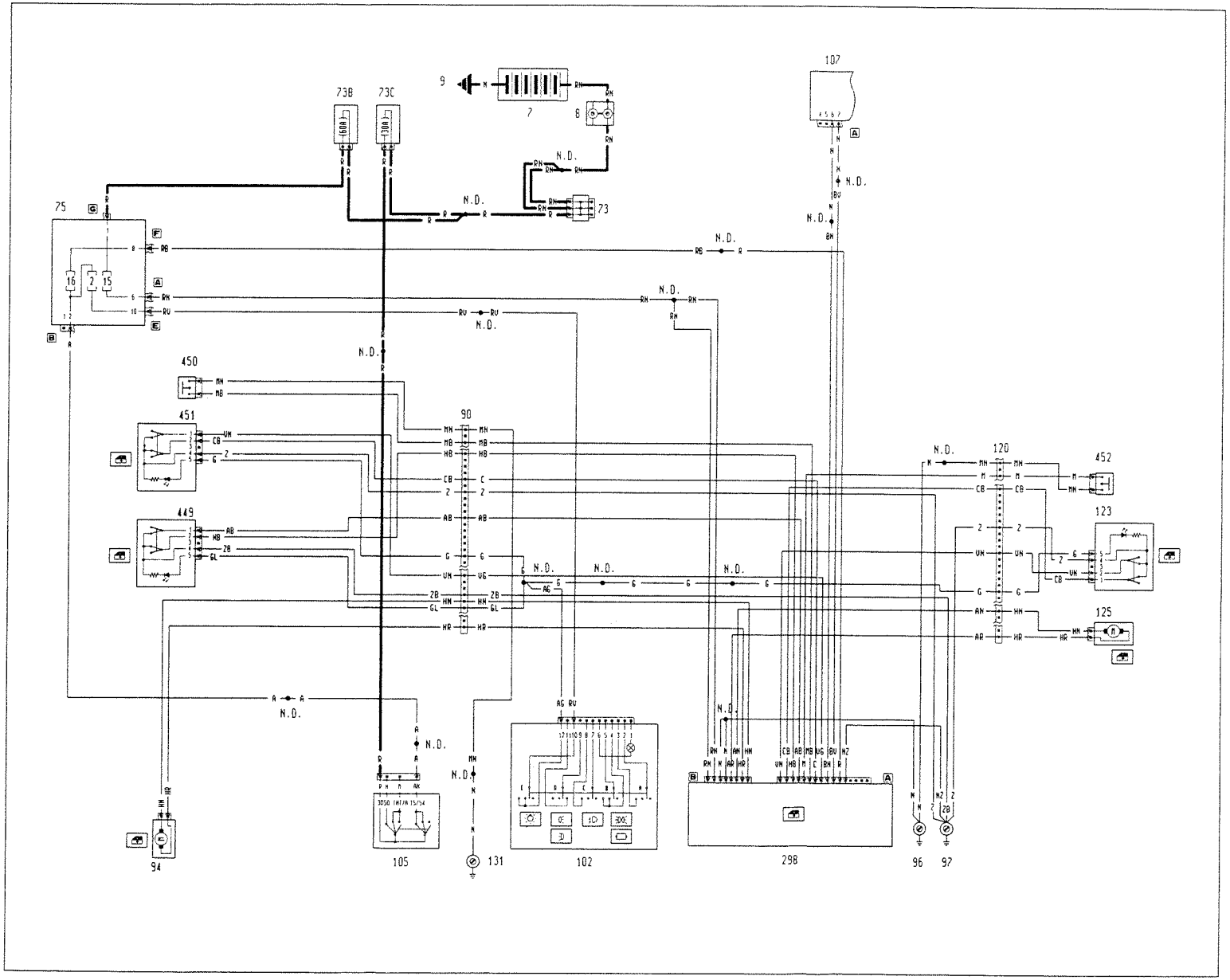

Copyright by Fiat Auto

55.

Electric rear windows - (See key at end of wiring diagrams)

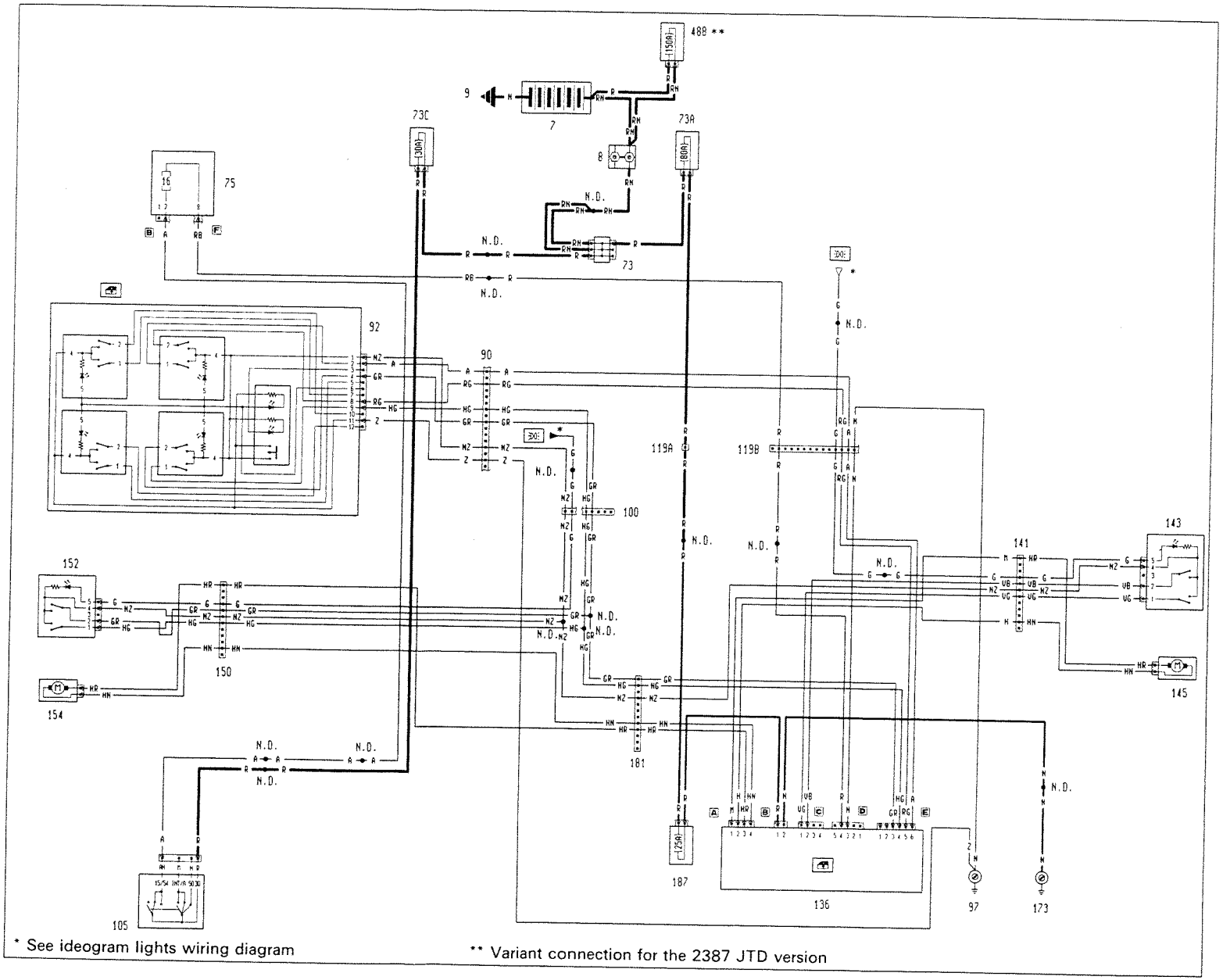

* See ideogram lights wiring diagram

** Variant connection for the 2387 JTD version

P3U42IZ01

Ideogram lights - Heated rear windscreen and warning light - (See key at end of wiring diagrams)

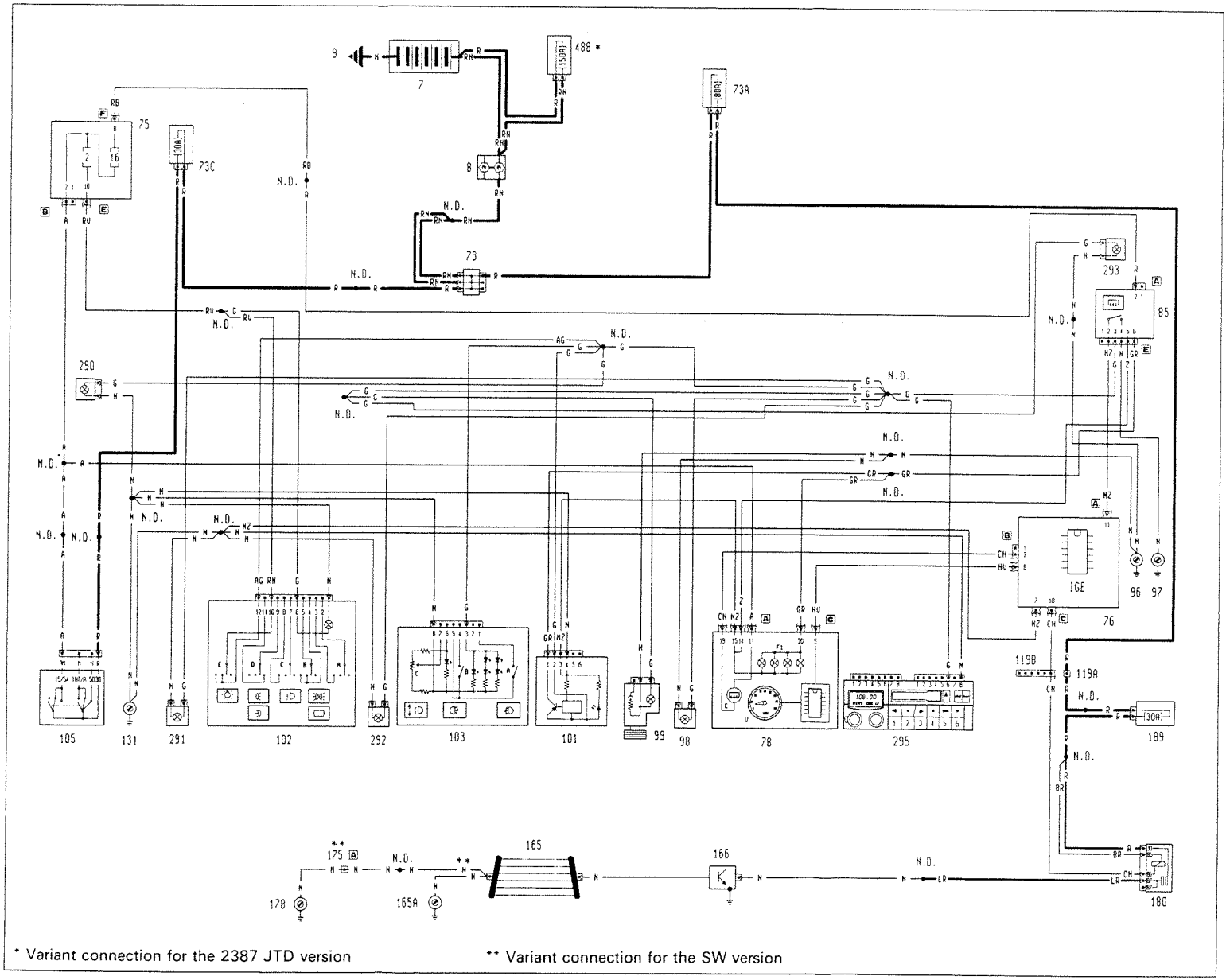

* Variant connection for the 2387 JTD version

** Variant connection for the SW version

P3U43IZ01

Copyright by Fiat Auto

55.

Electrically adjustable heated and folding external rear view mirrors - Electro-chromic internal rear view mirror - (See key at end of wiring diagrams)

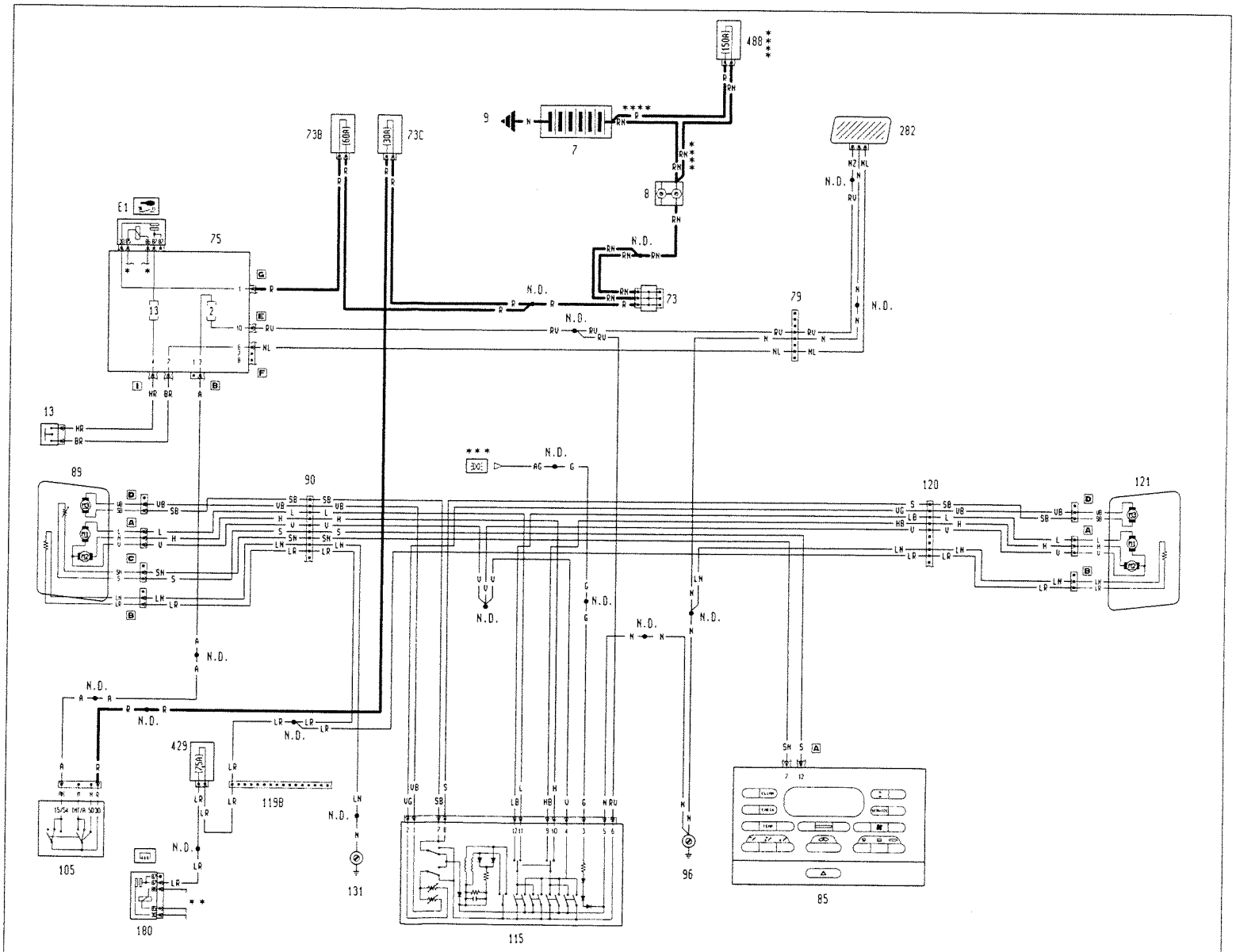

* See starting wiring diagram ** See heated rear windscreen diagram *** See ideogram lights wiring diagram **** Variant connection for the 2387 JTD version

P3U44IZ01

Air-Bag and failure warning light - Seat belt pre-tensioners - Servotronik device - (See key at end of wiring diagrams)

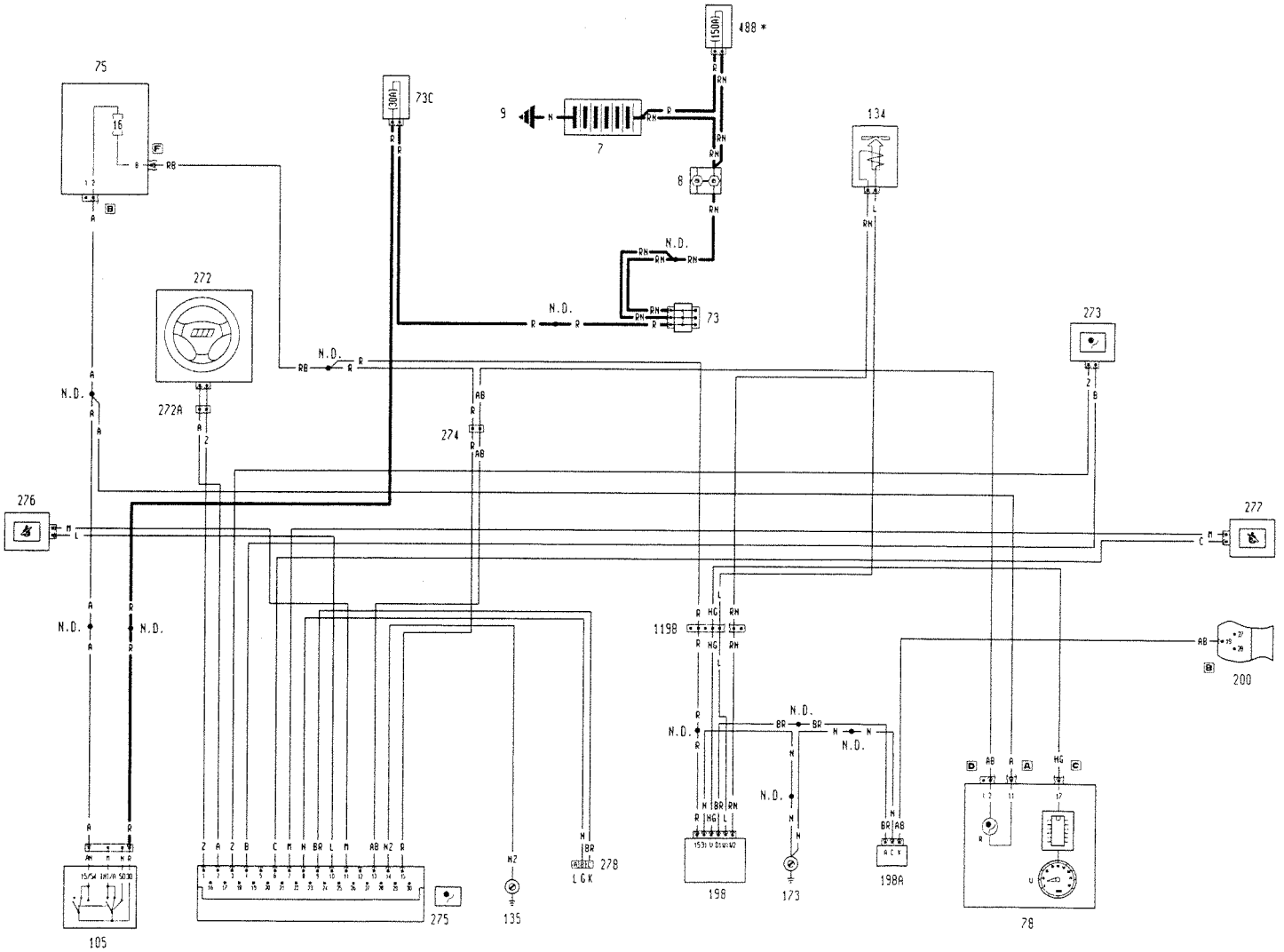

* Variant connection for the 2387 JTD version

P3U45IZ01

Copyright by Fiat Auto

Version with alarm
Central locking and signalling of doors open - (See key at end of wiring diagrams)

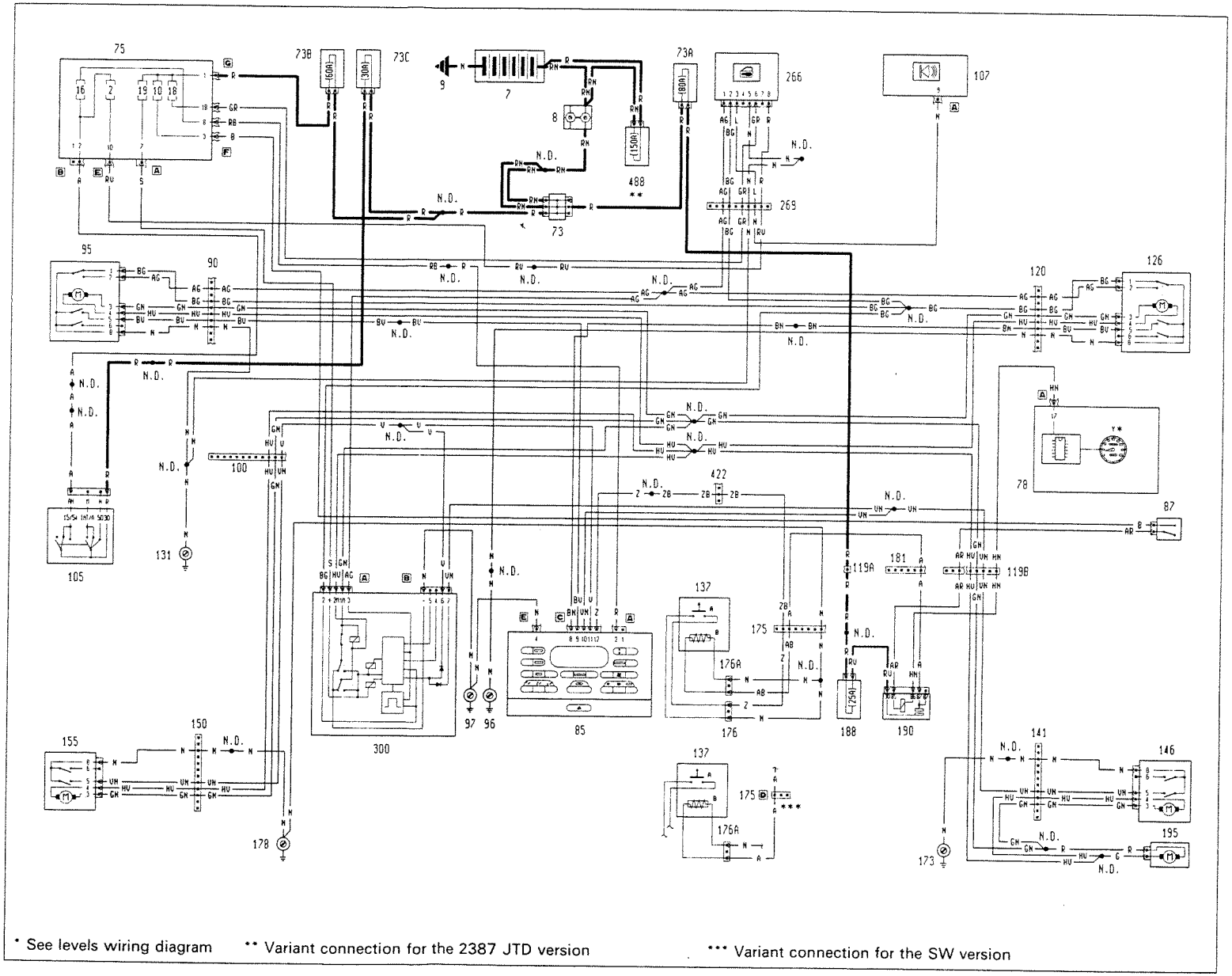

* See levels wiring diagram ** Variant connection for the 2387 JTD version *** Variant connection for the SW version

P3U46IZ01

Version with alarm
Central locking and signalling of doors open - (See key at end of wiring diagrams)

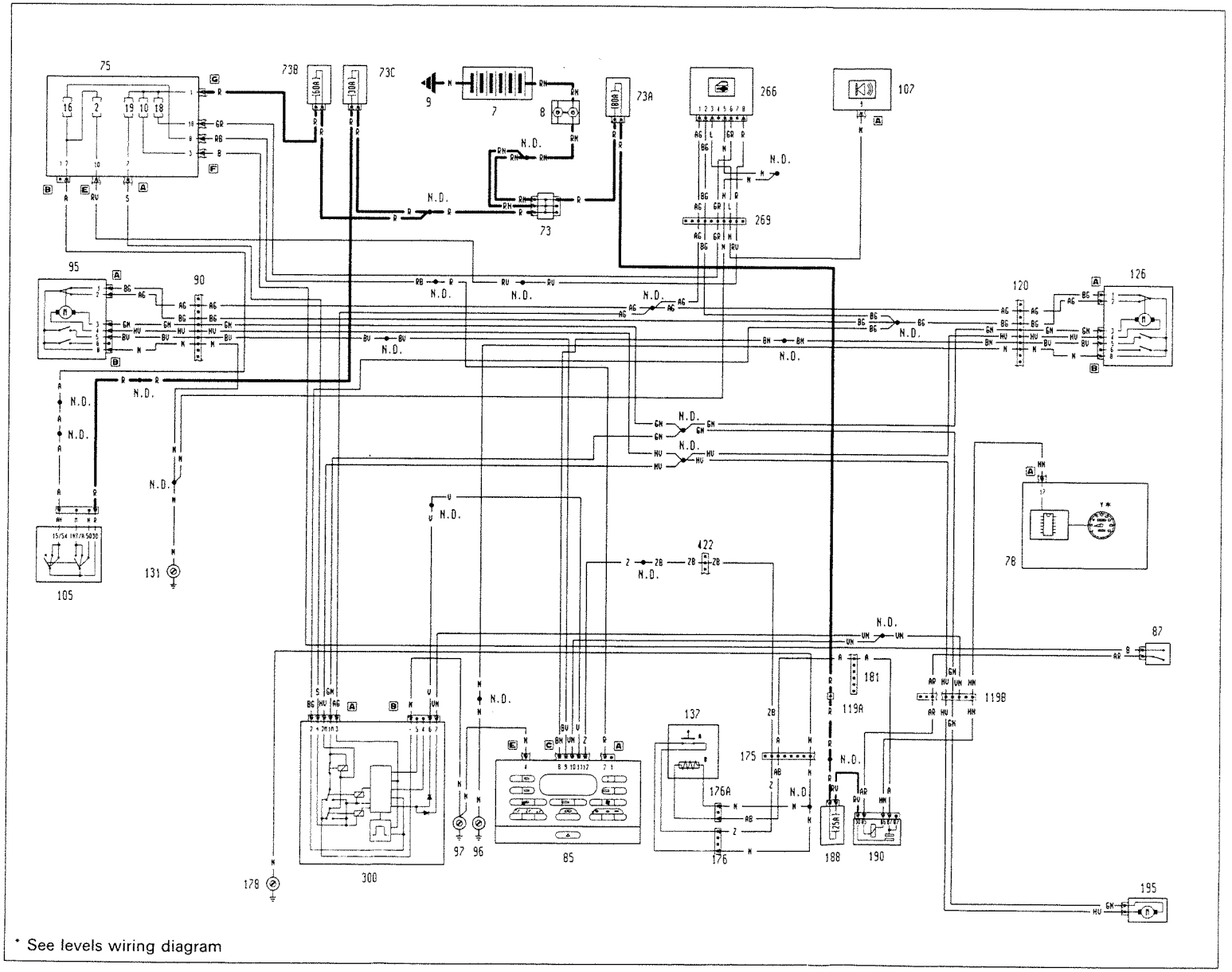

* See levels wiring diagram

Copyright by Fiat Auto

55.

Version without alarm
Central locking and signalling of doors open - (See key at end of wiring diagrams)

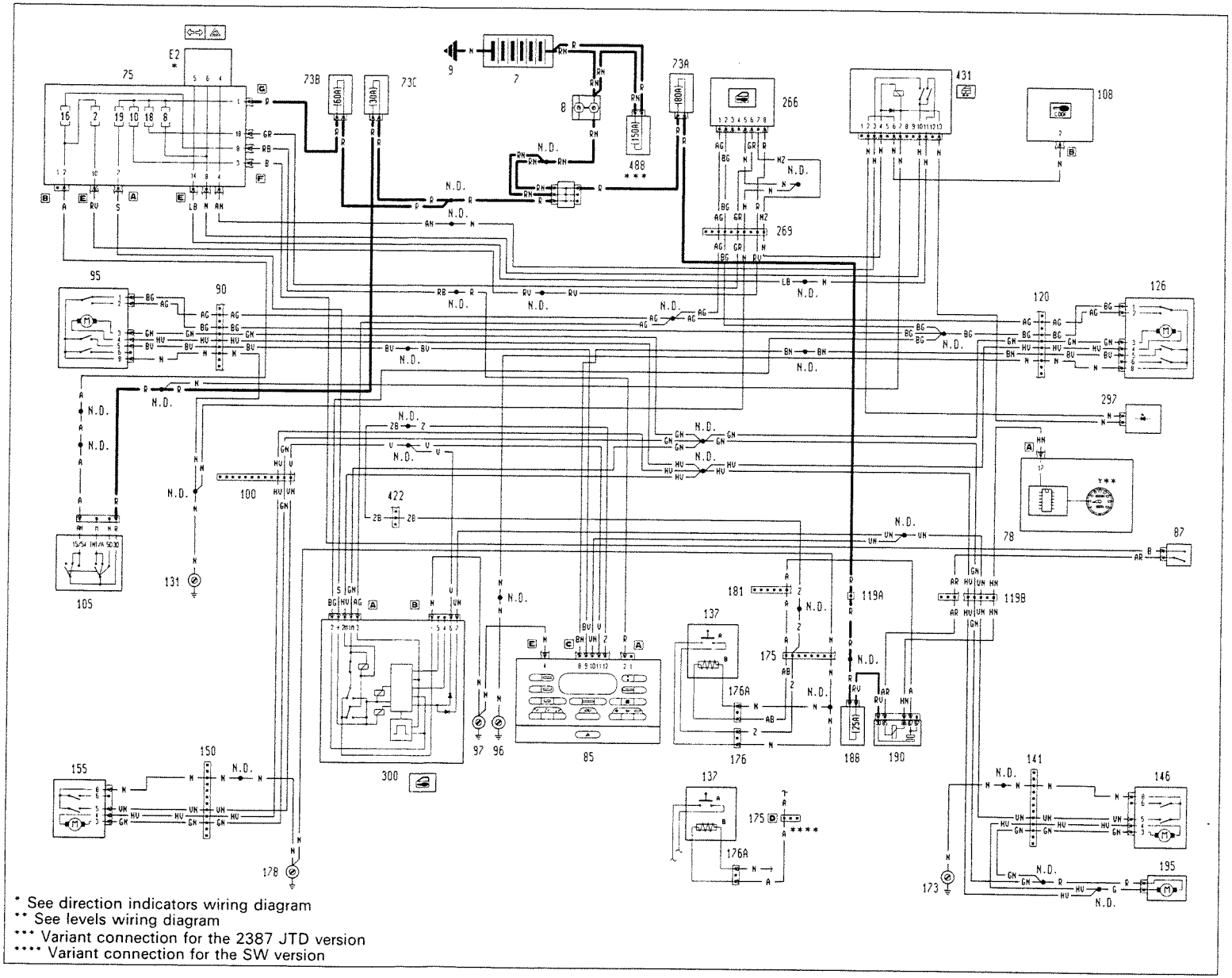

Version without alarm
Central locking and signalling of doors open - (See key at end of wiring diagrams)

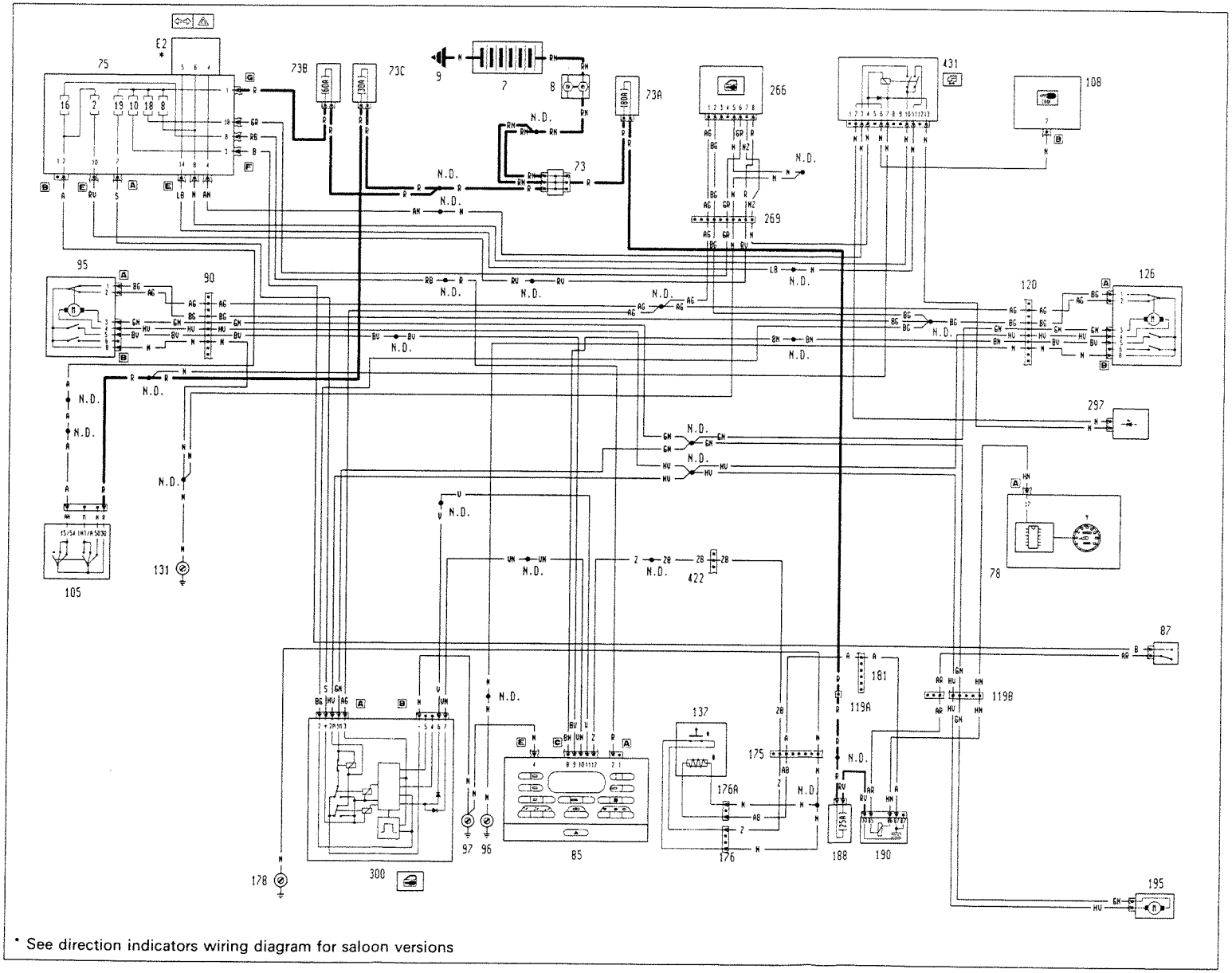

* See direction indicators wiring diagram for saloon versions

P3U49IZ01

Copyright by Fiat Auto

55.

Electric, heated front seats - Driver's seat with memory - (See key at end of wiring diagrams)

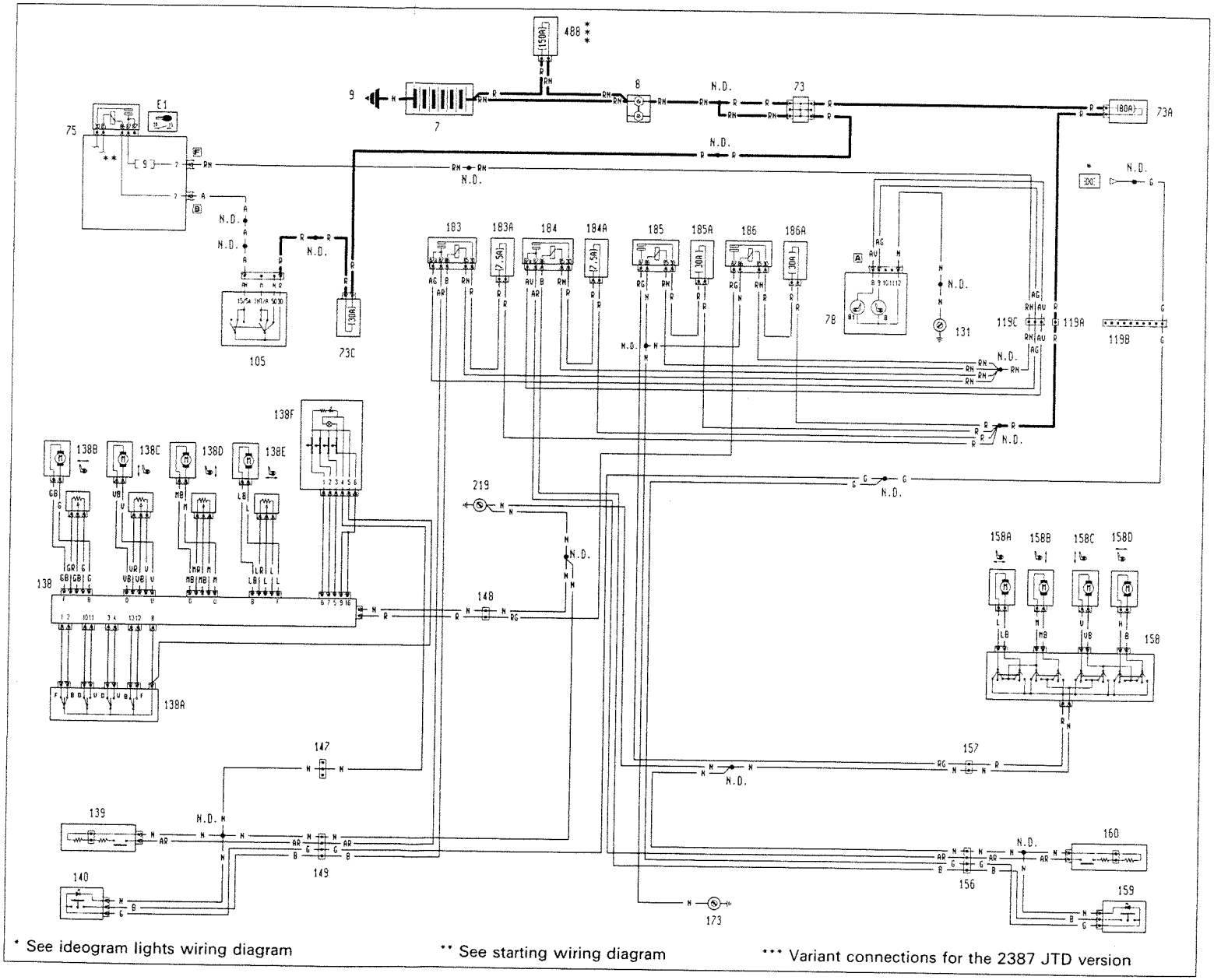

* See ideogram lights wiring diagram

** See starting wiring diagram

*** Variant connections for the 2387 JTD version

P3U50IZ01

Electric, heated front seats - Driver's seat with memory - (See key at end of wiring diagrams)

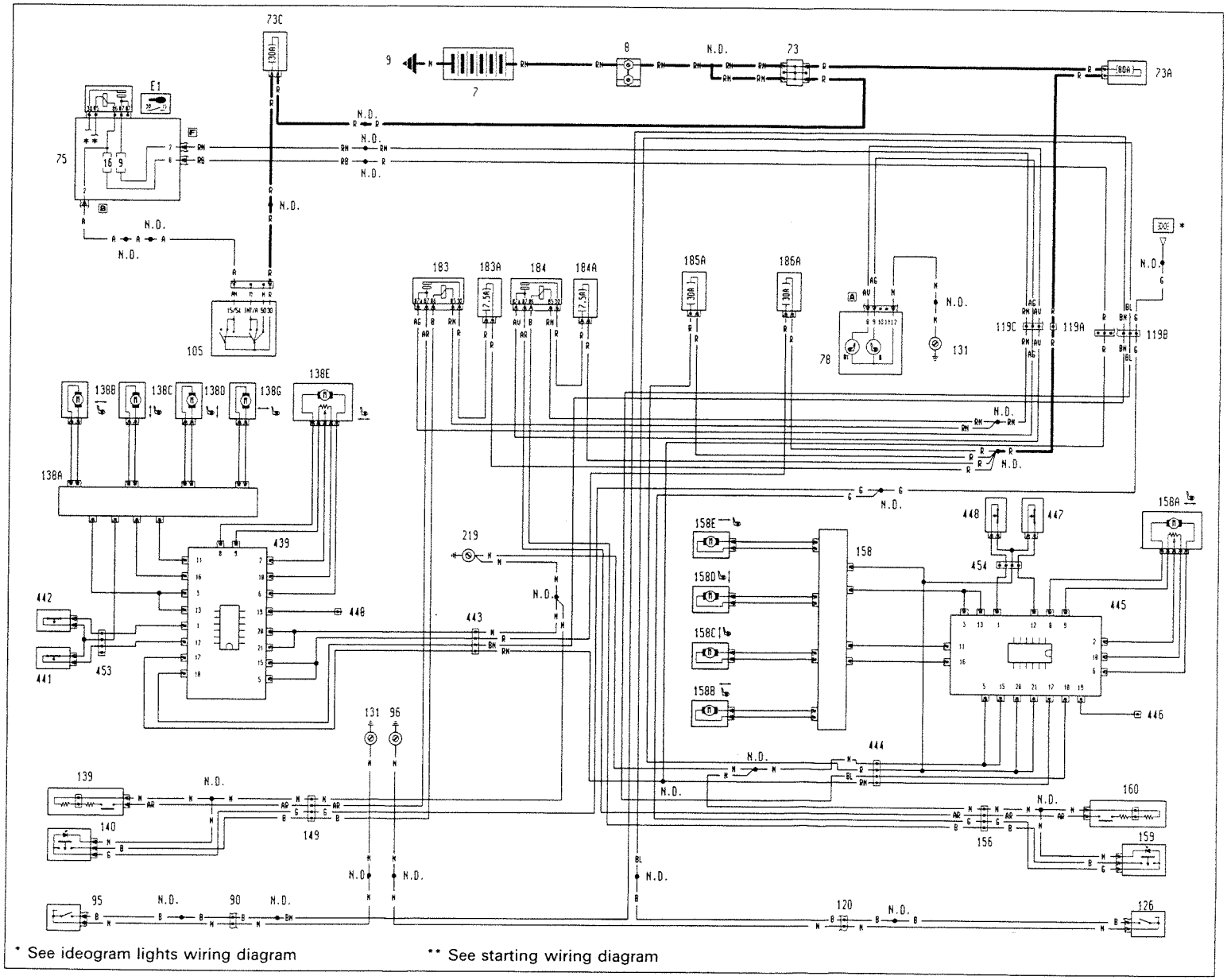

* See ideogram lights wiring diagram

** See starting wiring diagram

P3U51IZ01

Copyright by Fiat Auto

55.

Petrol versions
Automatic climate control - (See key at end of wiring diagrams)

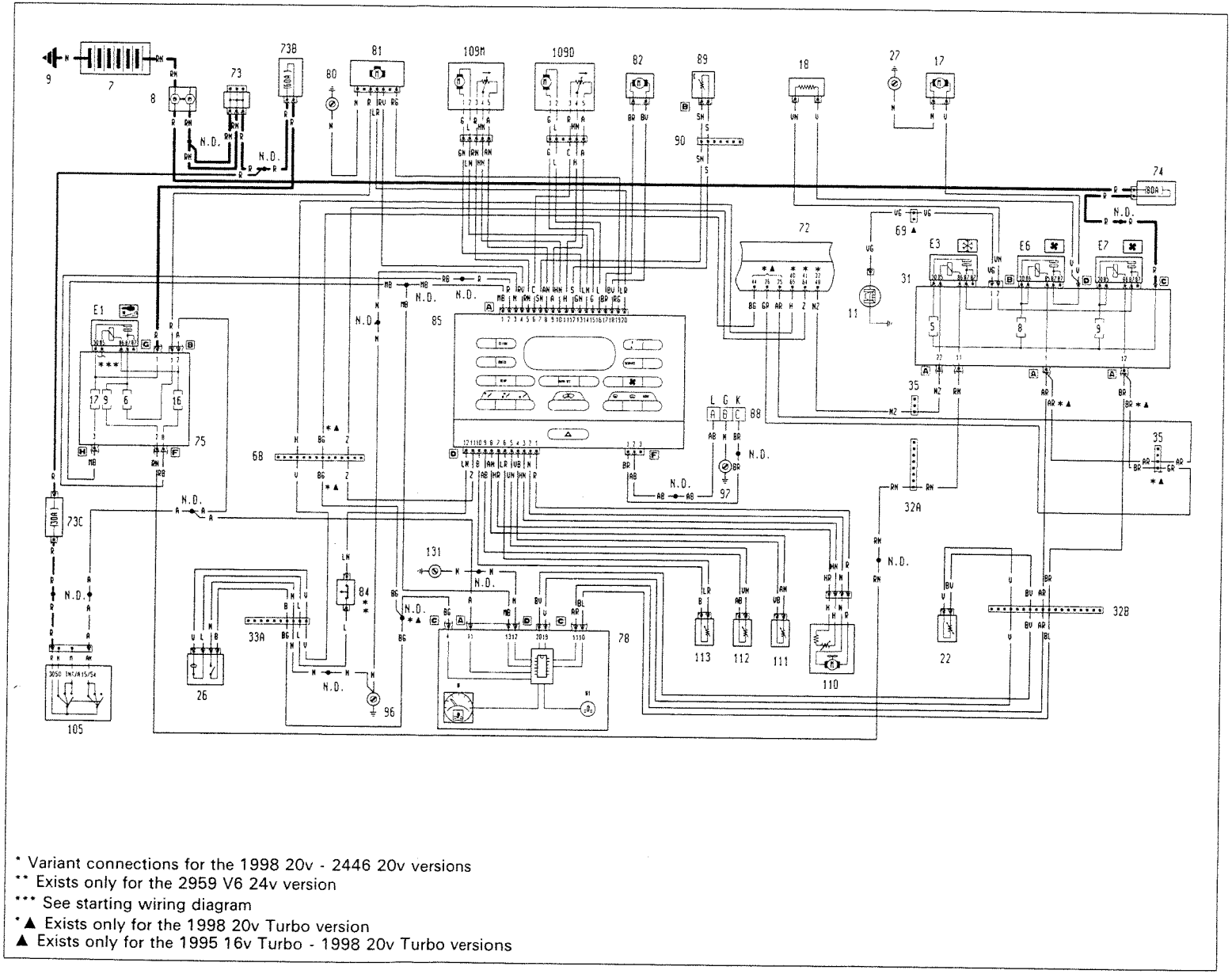

* Variant connections for the 1998 20v - 2446 20v versions
** Exists only for the 2959 V6 24v version
*** See starting wiring diagram
*▲ Exists only for the 1998 20v Turbo version
▲ Exists only for the 1995 16v Turbo - 1998 20v Turbo versions

P3U52IZ01

TD versions
Automatic climate control - (See key at end of wiring diagrams)

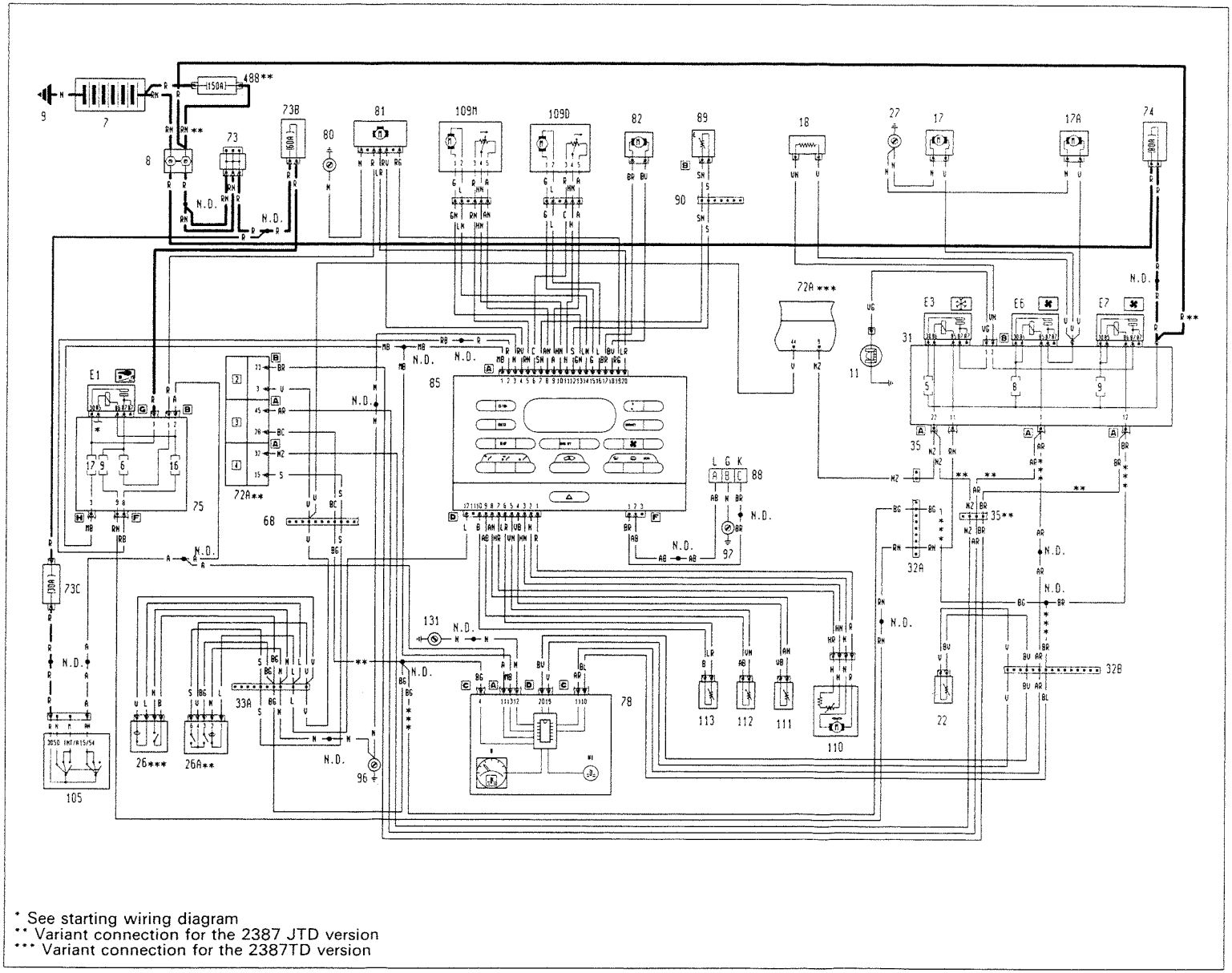

* See starting wiring diagram
** Variant connection for the 2387 JTD version
*** Variant connection for the 2387TD version

P3U53IZ01

Copyright by Fiat Auto

Automatic transmission (Aisin) - (See key at end of wiring diagrams)

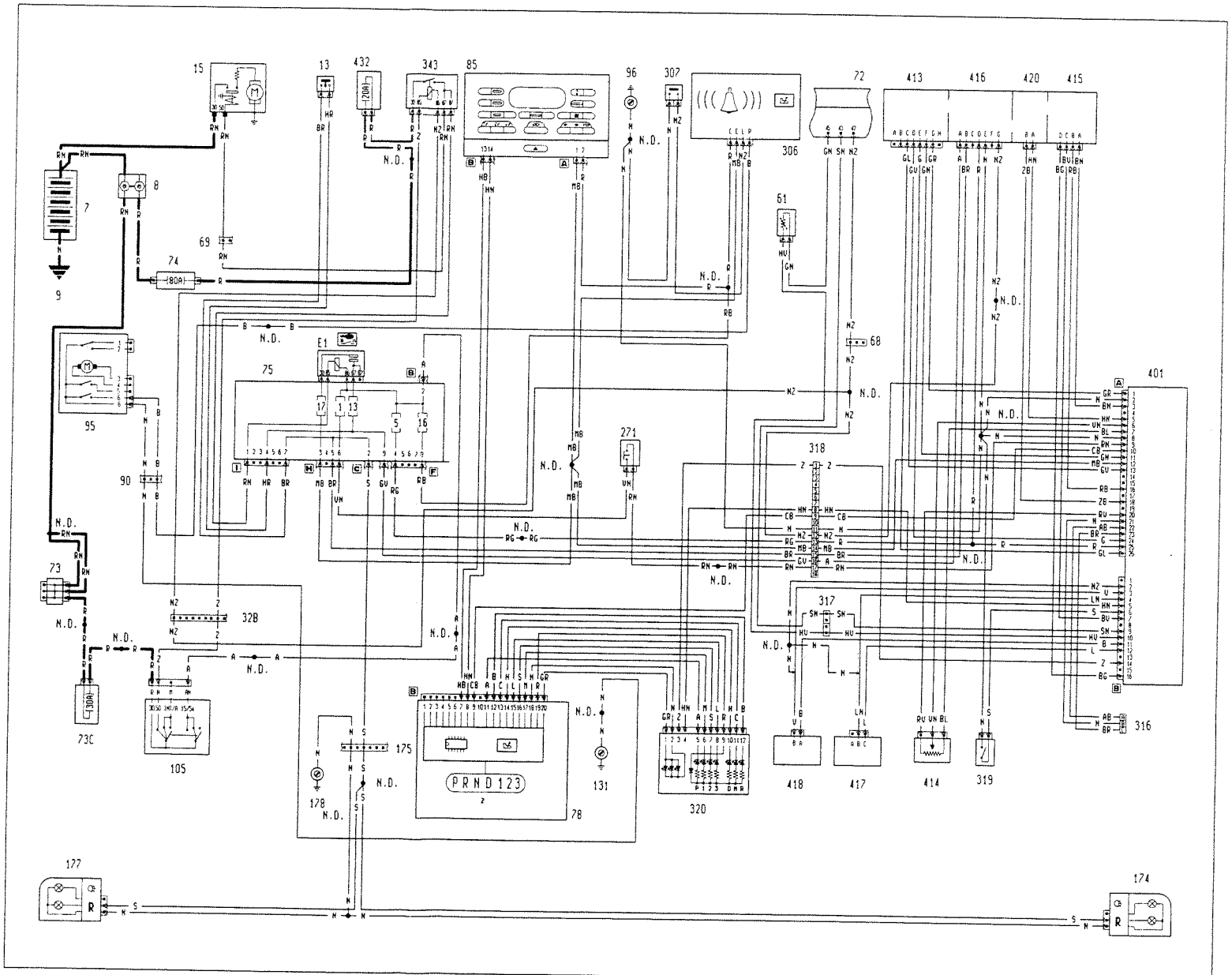

Automatic transmission (ZF) - (See key at end of wiring diagrams)

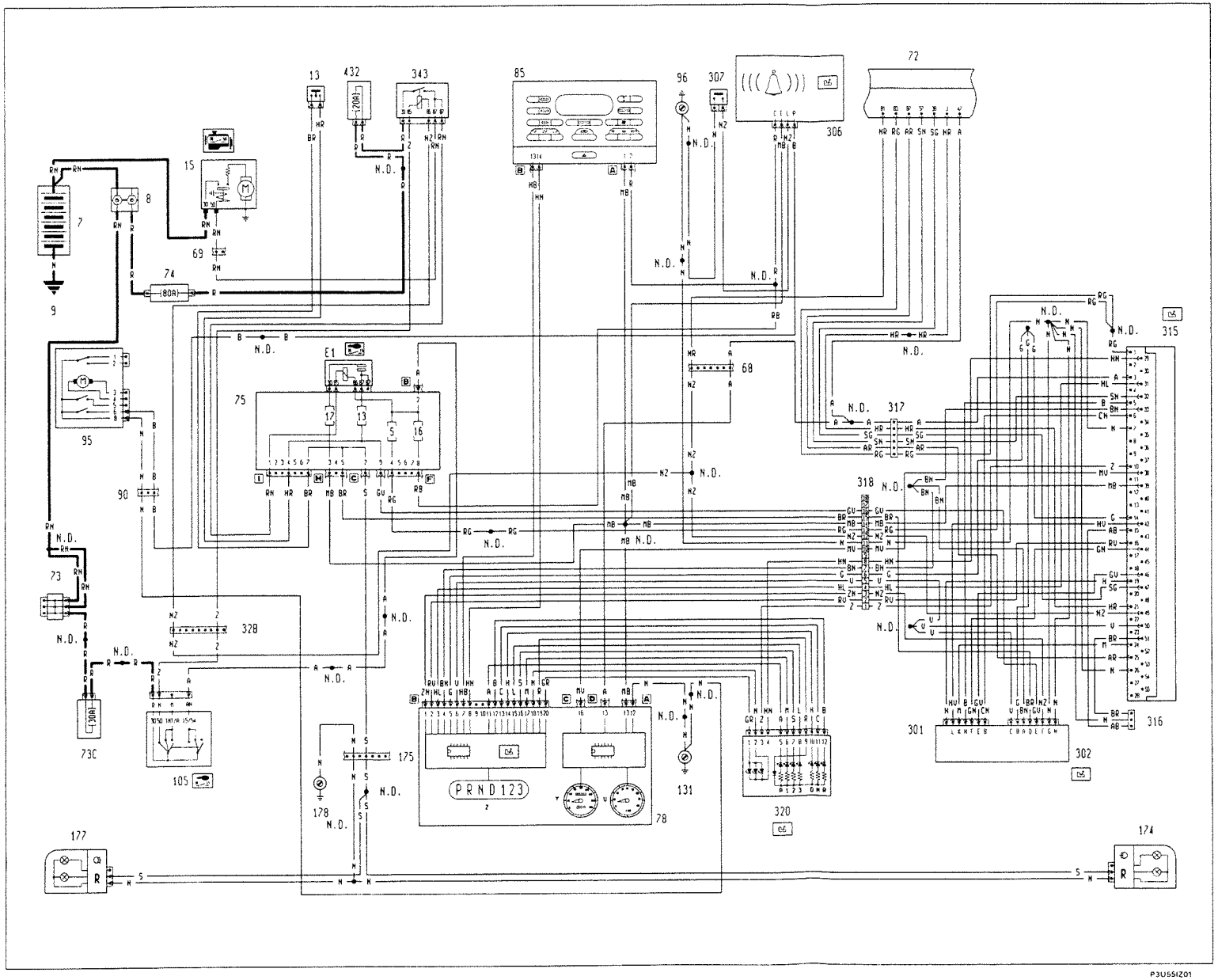

Copyright by Fiat Auto

55.

Version: 1998 20v -2446 20v -2956 V6 24v
Alarm - (See key at end of wiring diagrams)

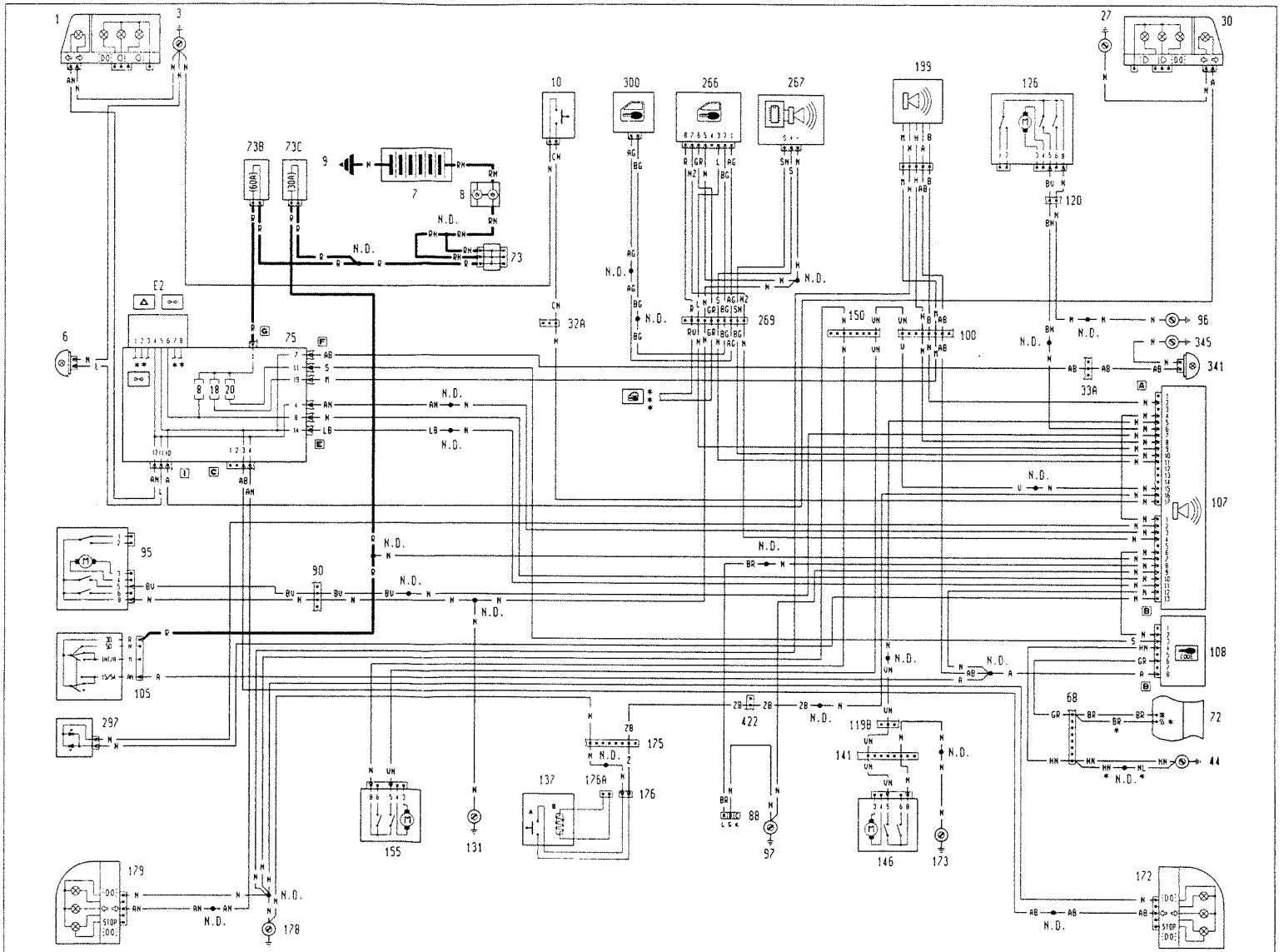

* Variant connections for the 1998 20v - 2446 20v versions
** See direction indicators wiring diagram
*** See central locking wiring diagram

P3U561Z01

Version : 1995 16v Turbo - 1998 20v Turbo
Alarm - (See key at end of wiring diagrams)

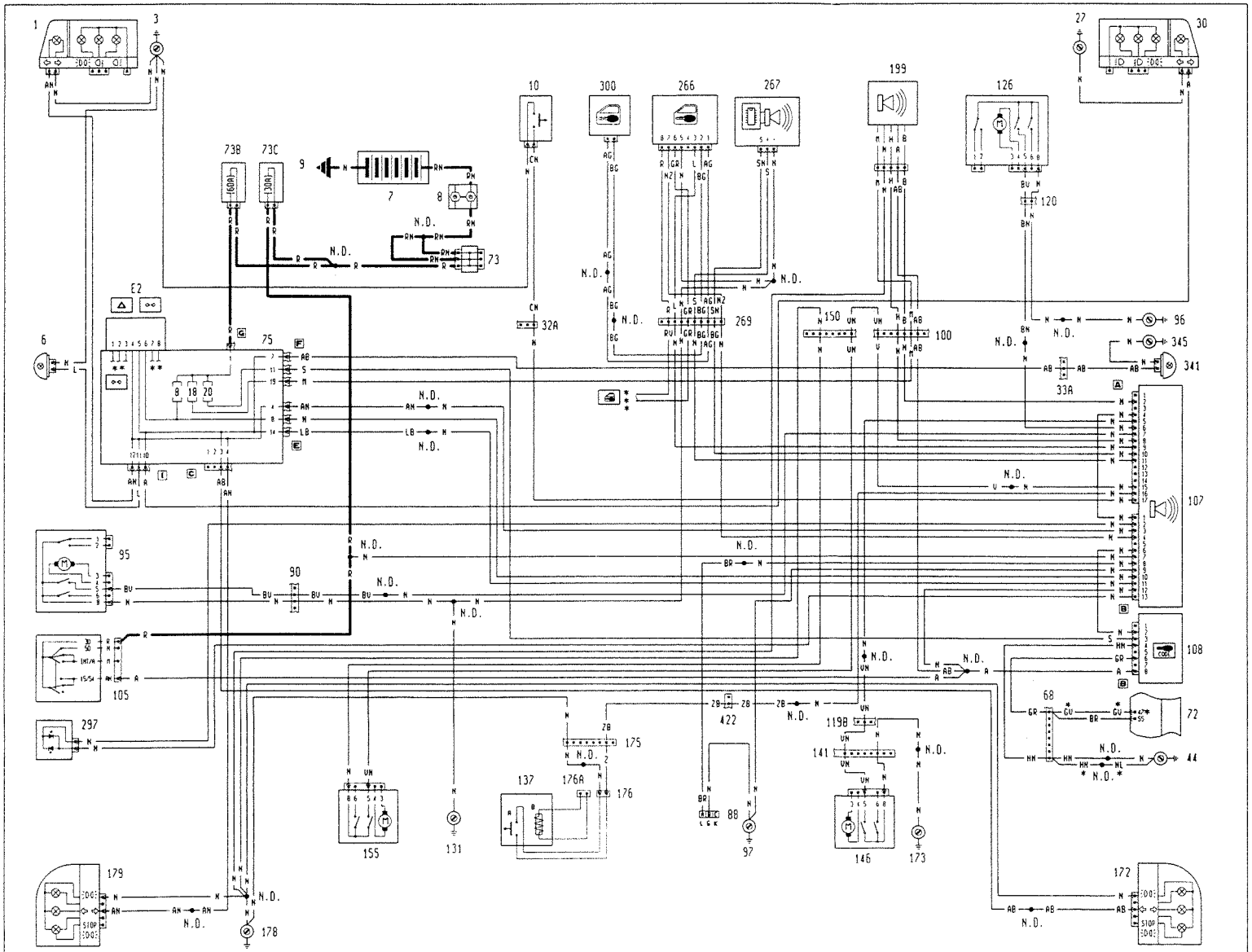

* Variant connections for the 1998 20v Turbo version

** See direction indicators wiring diagram

*** See central locking wiring diagram

P3U57IZ01

55.

Version: 2387 TD - 2387 JTD
Alarm - (See key at end of wiring diagrams)

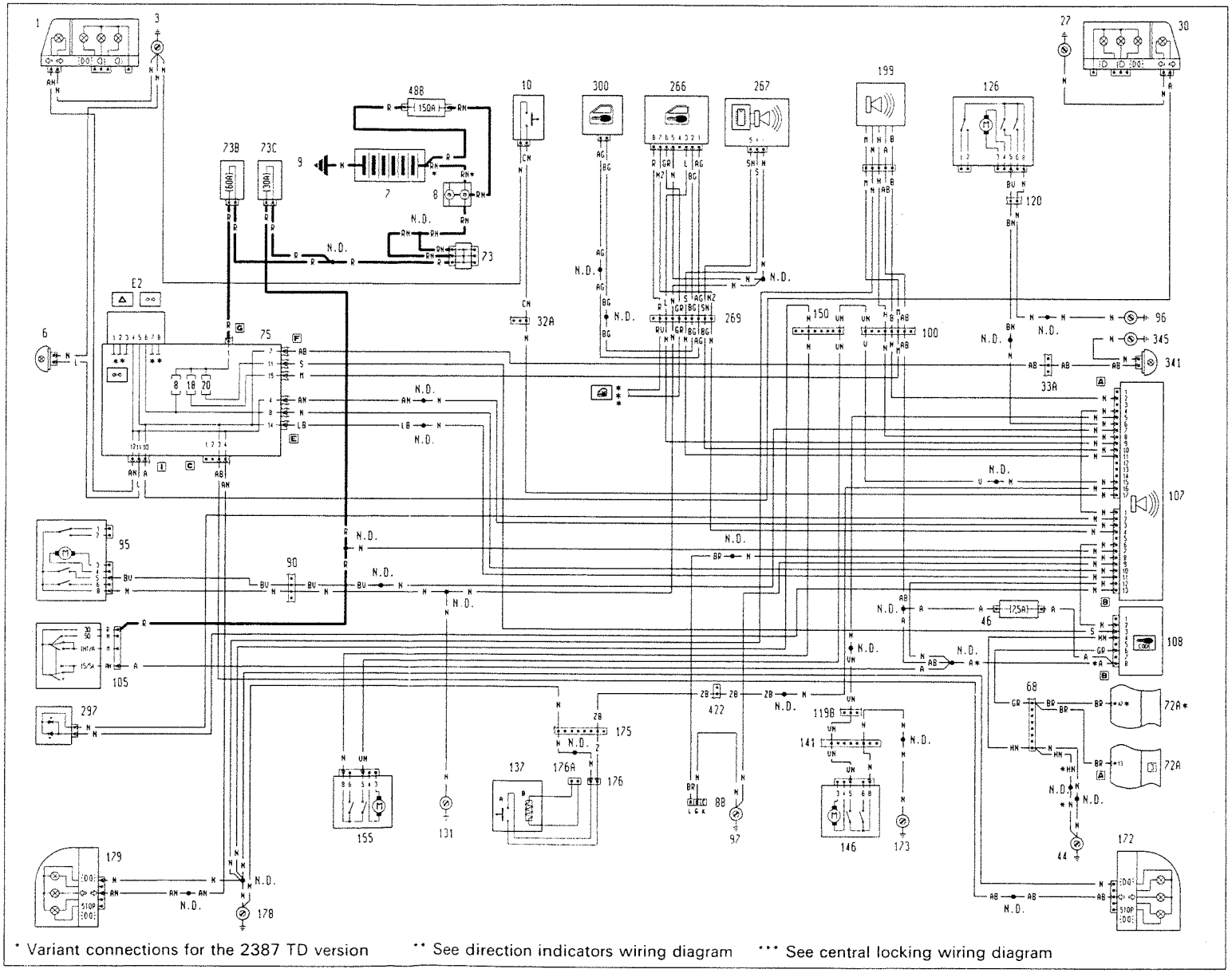

* Variant connections for the 2387 TD version ** See direction indicators wiring diagram *** See central locking wiring diagram

P3U58IZ01

Version: 2446 20v - 2959 V6 24v
Alarm - (See key at end of wiring diagrams)

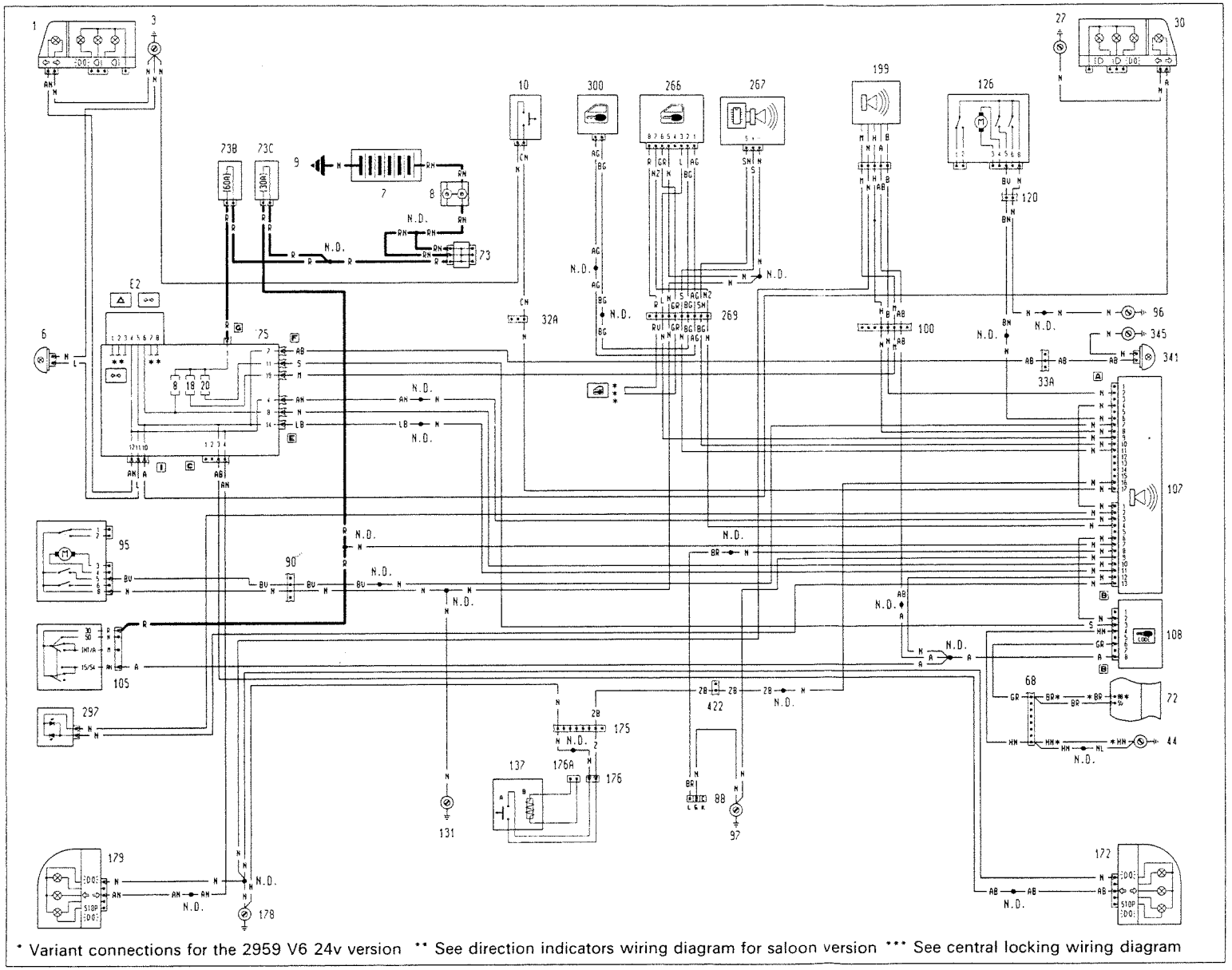

* Variant connections for the 2959 V6 24v version ** See direction indicators wiring diagram for saloon version *** See central locking wiring diagram

P3U59IZ01

55.

Version: 1995 16v Turbo - 1998 20v Turbo
Alarm (See key at end of wiring diagrams)

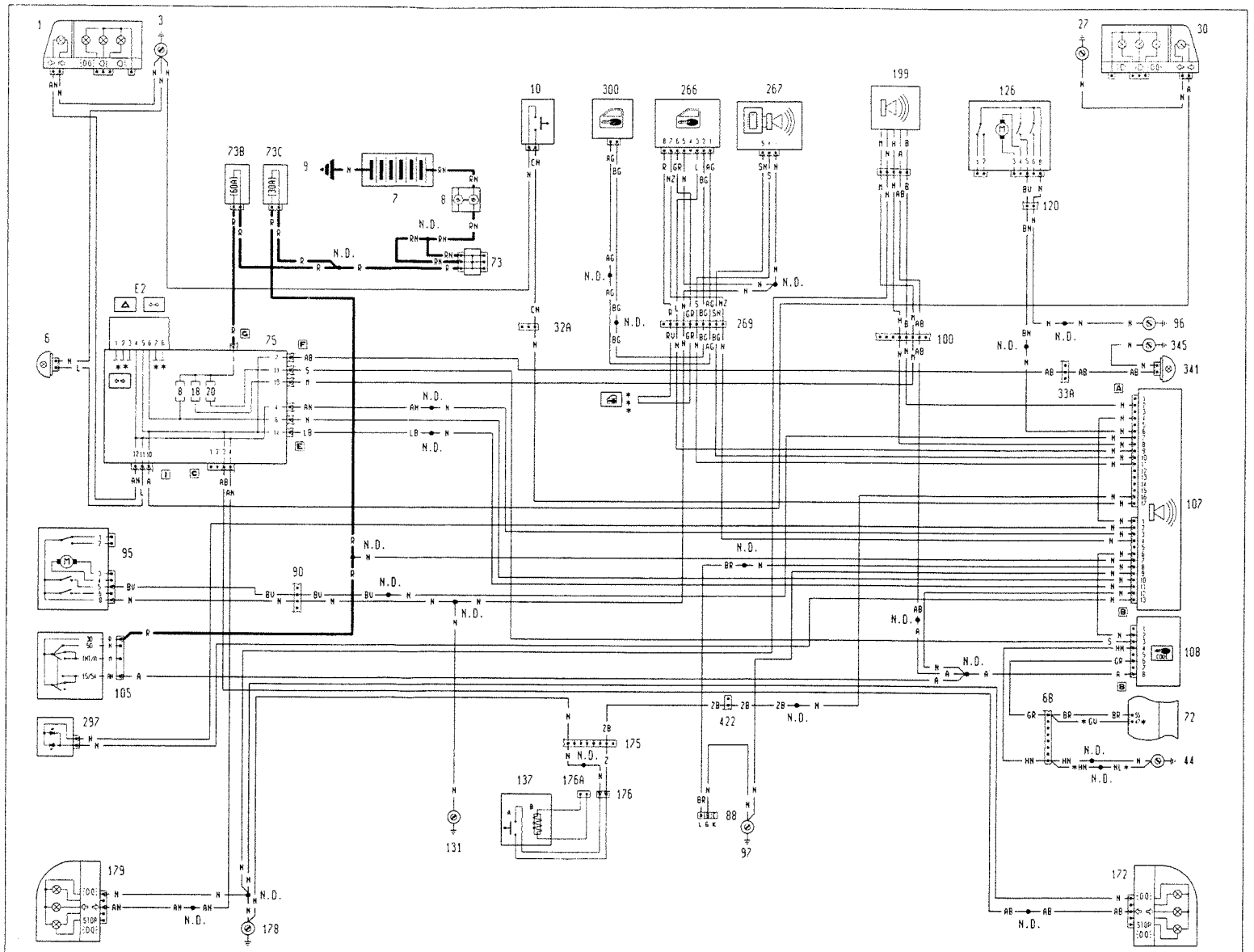

* Variant connections for the 1998 20v Turbo version ** See direction indicators wiring diagram for the saloon version *** See central locking wiring diagram

P3U60IZ01

Petrol versions
Complete Inforcenter - (See key at end of wiring diagrams)

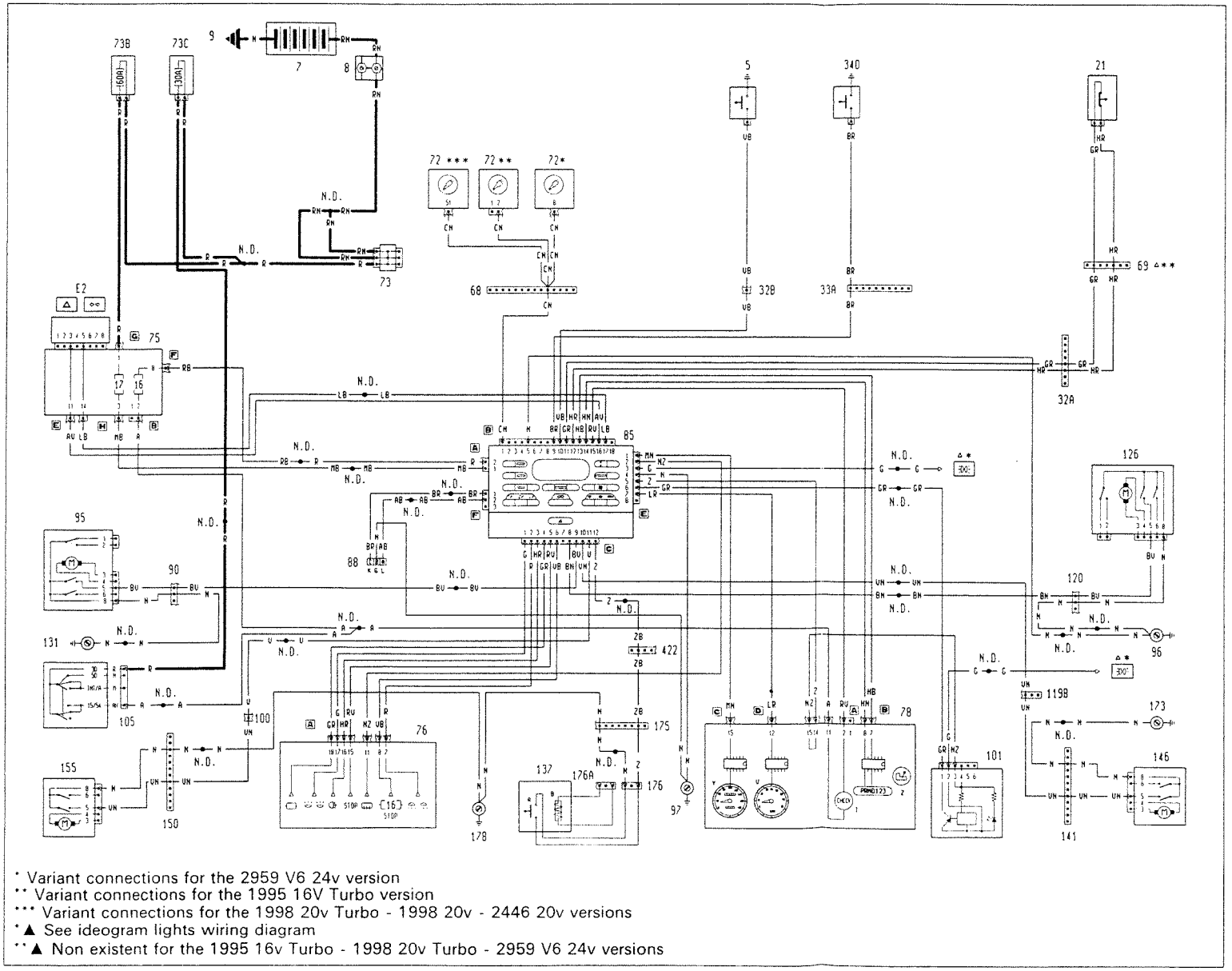

* Variant connections for the 2959 V6 24v version
** Variant connections for the 1995 16V Turbo version
*** Variant connections for the 1998 20v Turbo - 1998 20v - 2446 20v versions
*▲ See ideogram lights wiring diagram
**▲ Non existent for the 1995 16v Turbo - 1998 20v Turbo - 2959 V6 24v versions

P3U61IZ01

Copyright by Fiat Auto

55.

TD versions
Complete Inforcenter - (See key at end of wiring diagrams)

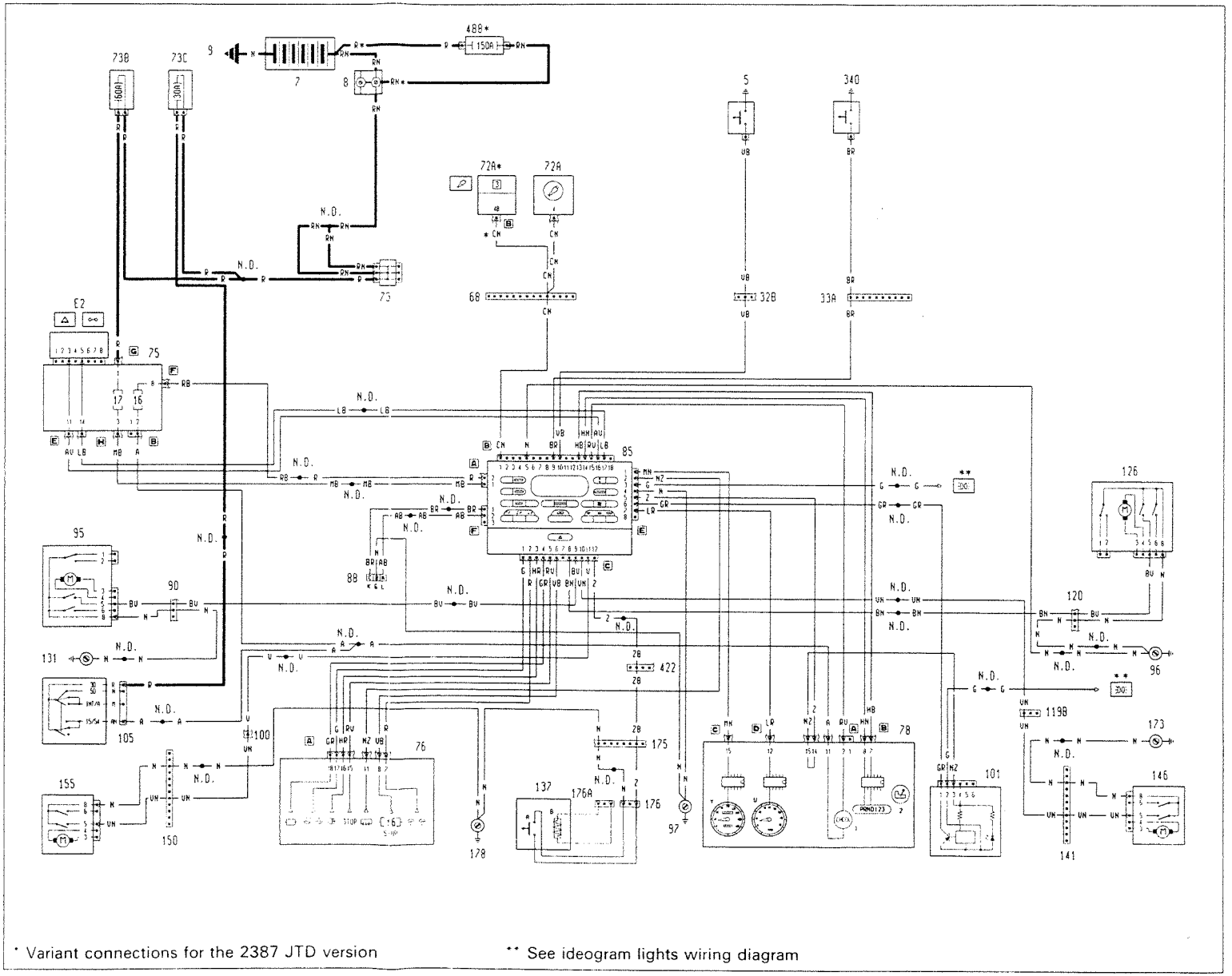

* Variant connections for the 2387 JTD version

** See ideogram lights wiring diagram

P3U62IZ01

Versions: petrol
Complete Inforcenter - (See key at end of wiring diagrams)

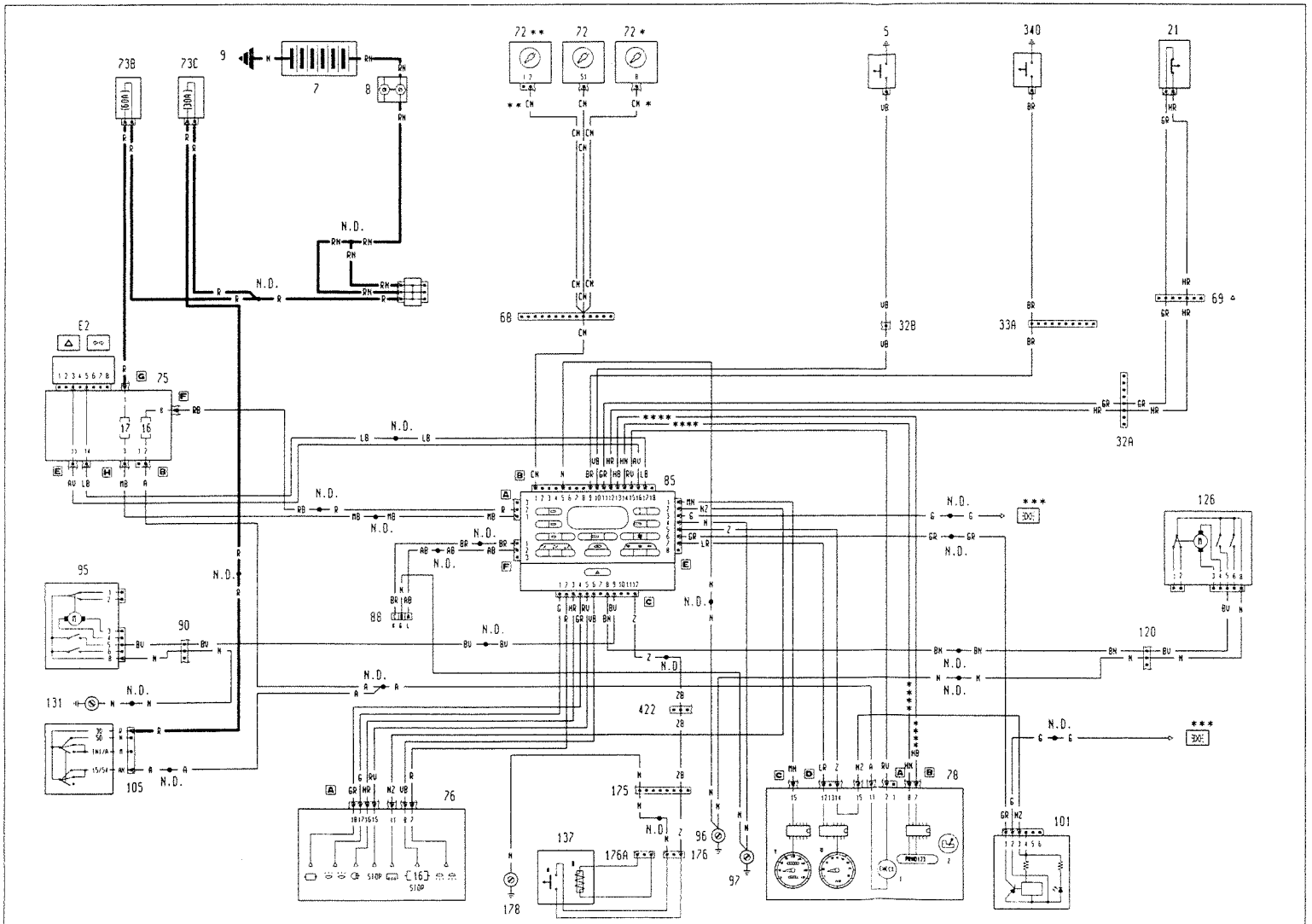

P3U631Z01

55.

Complete I.G.E. control unit connections - (See key at end of wiring diagrams)

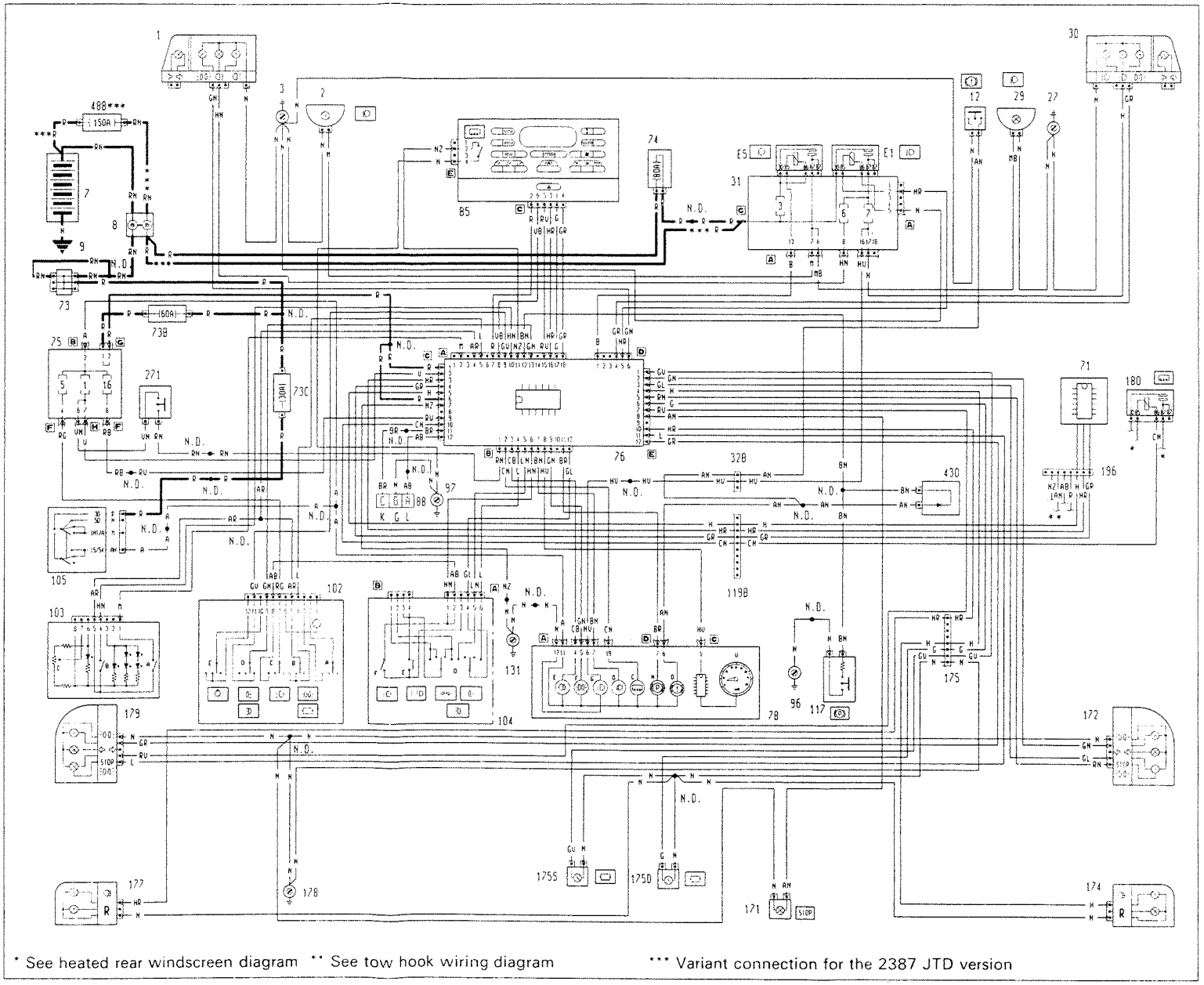

* See heated rear windscreen diagram ** See tow hook wiring diagram *** Variant connection for the 2387 JTD version

P3U64IZ01

Controlled damping suspension (S.C.S.) - (See key at end of wiring diagrams)

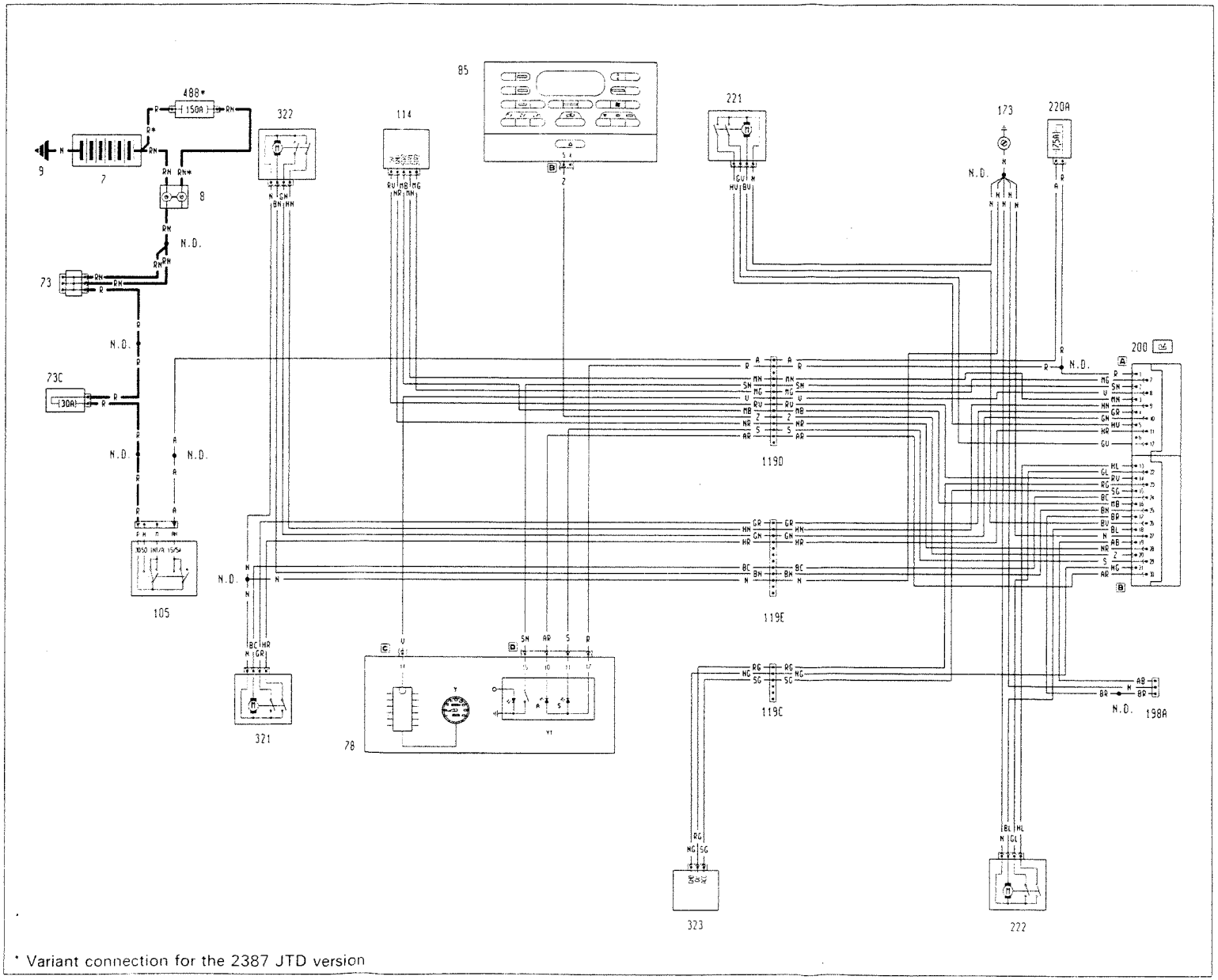

* Variant connection for the 2387 JTD version

Copyright by Fiat Auto

Petrol Versions
Instrument panel connections - (See key at end of wiring diagrams)

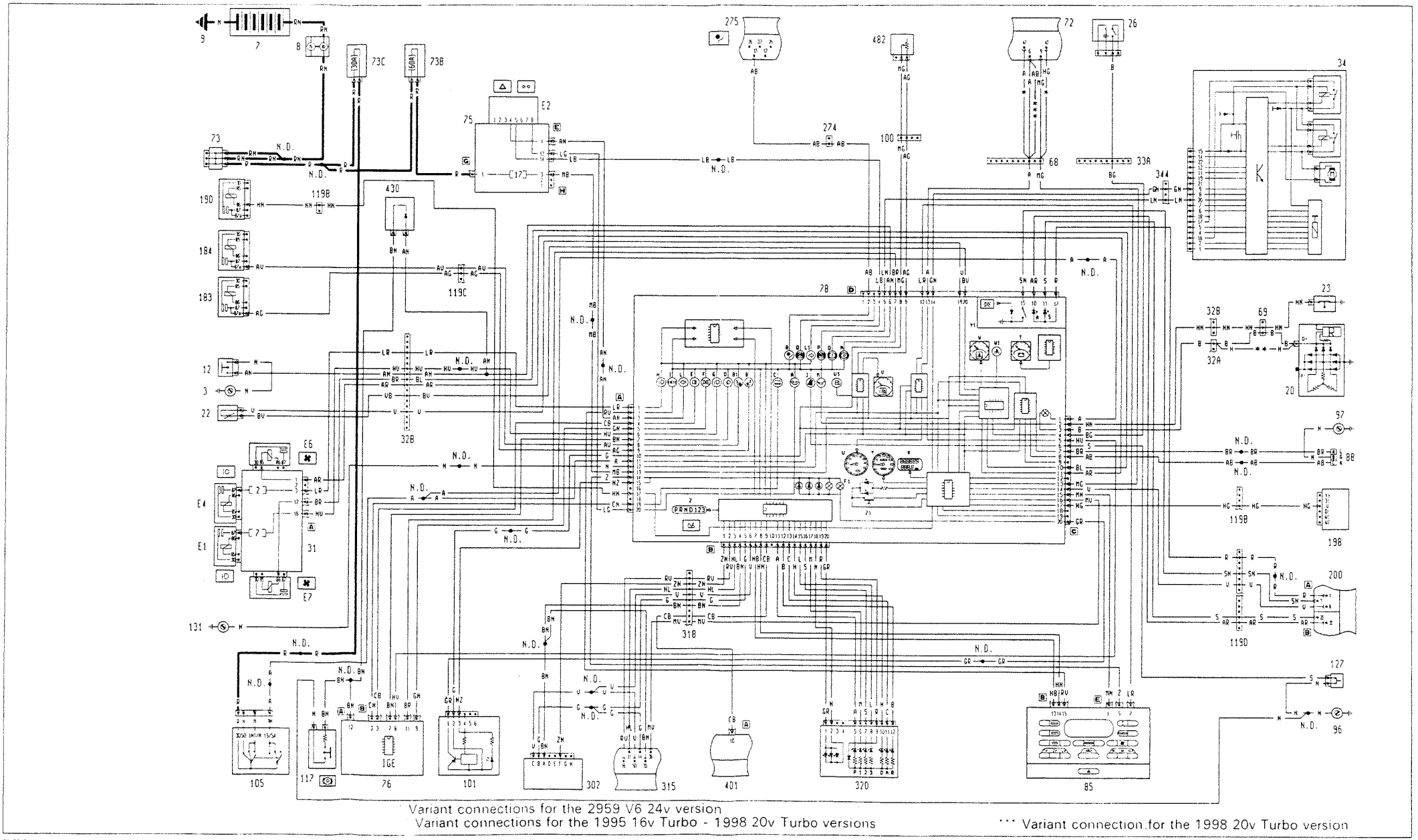

3U99i7

Diesel versions
Instrument panel connections - (See key at end of wiring diagrams)

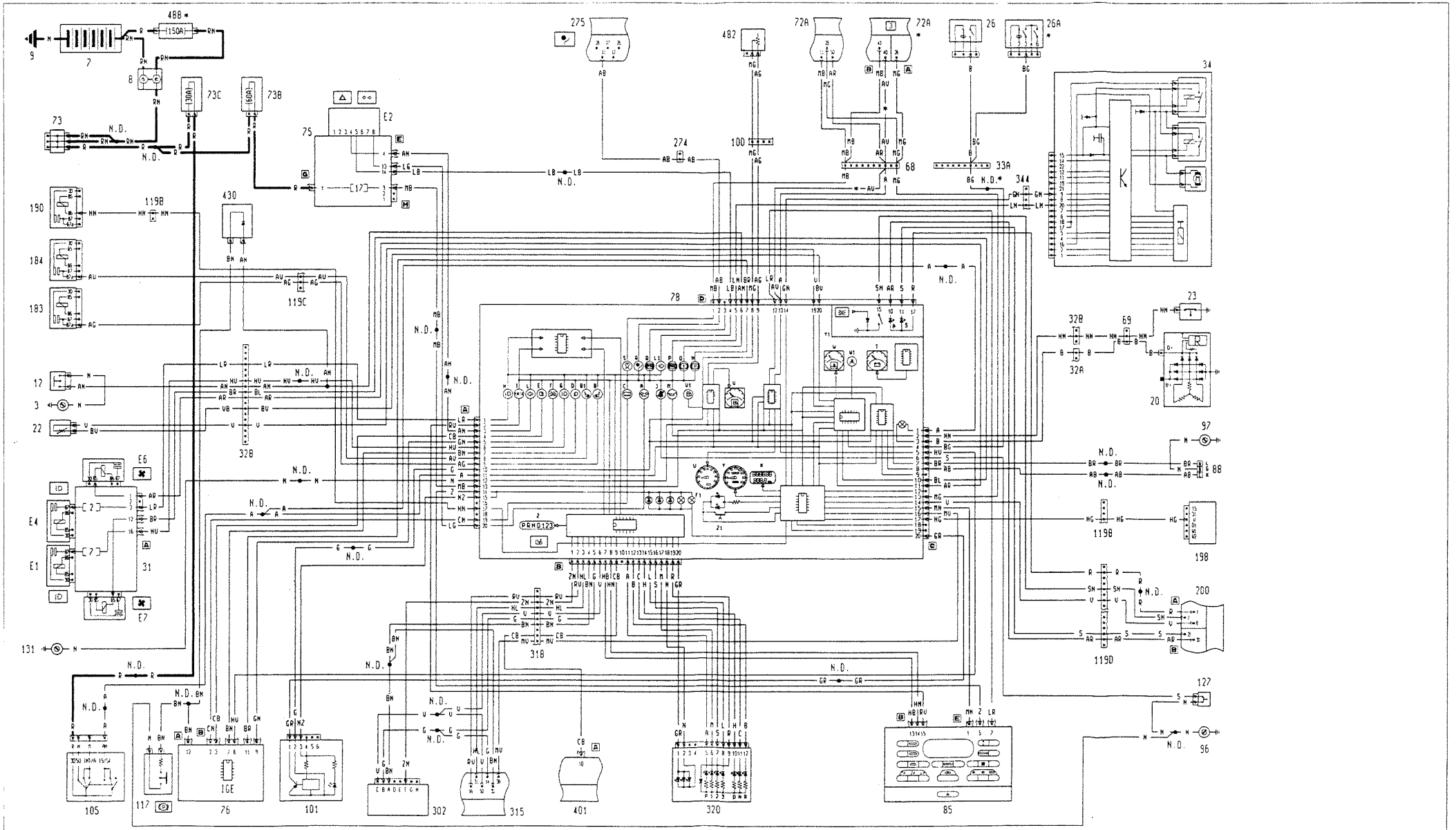

* Variant connection for the 2387 JTD version

3U971Z

55.

Junction unit (in dashboard) - (See key at end of wiring diagrams)

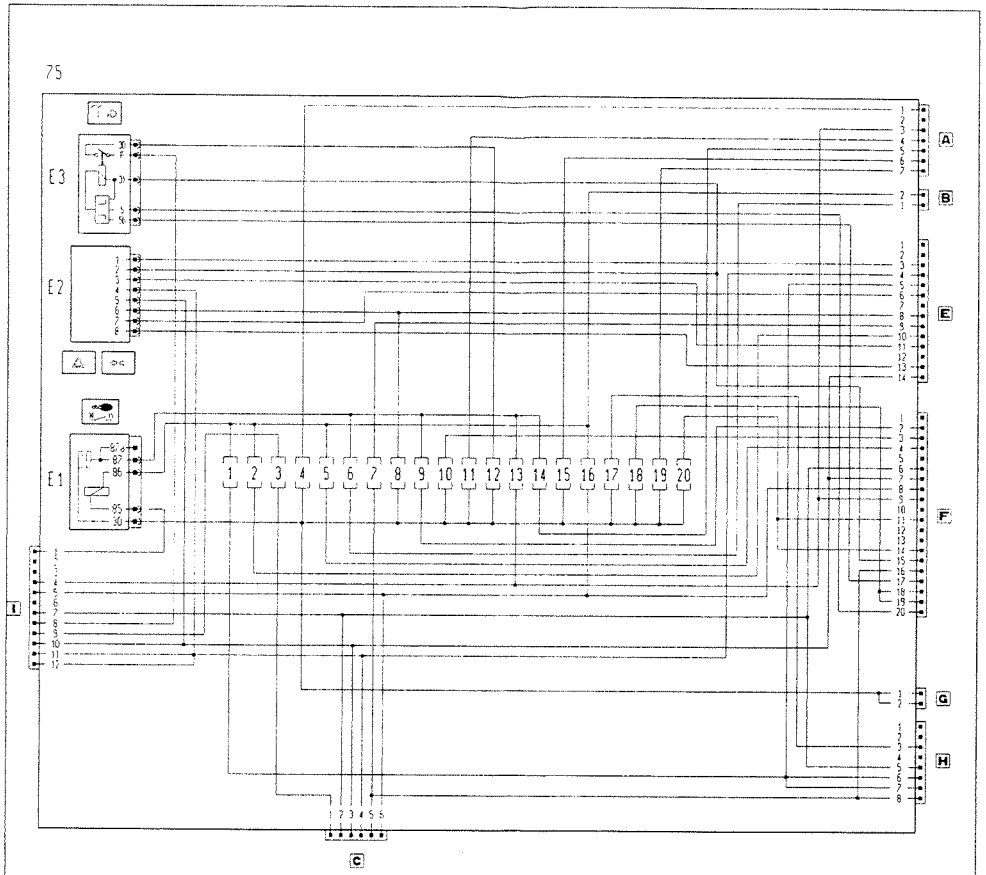

E1 Ignition discharge relay
E2 Direction indicators/hazard warning lights intermittent device
E3 Headlamp washer timer

P3U68IZ01

Peripheral control unit (in engine compartment) - (See key at end of wiring diagrams)

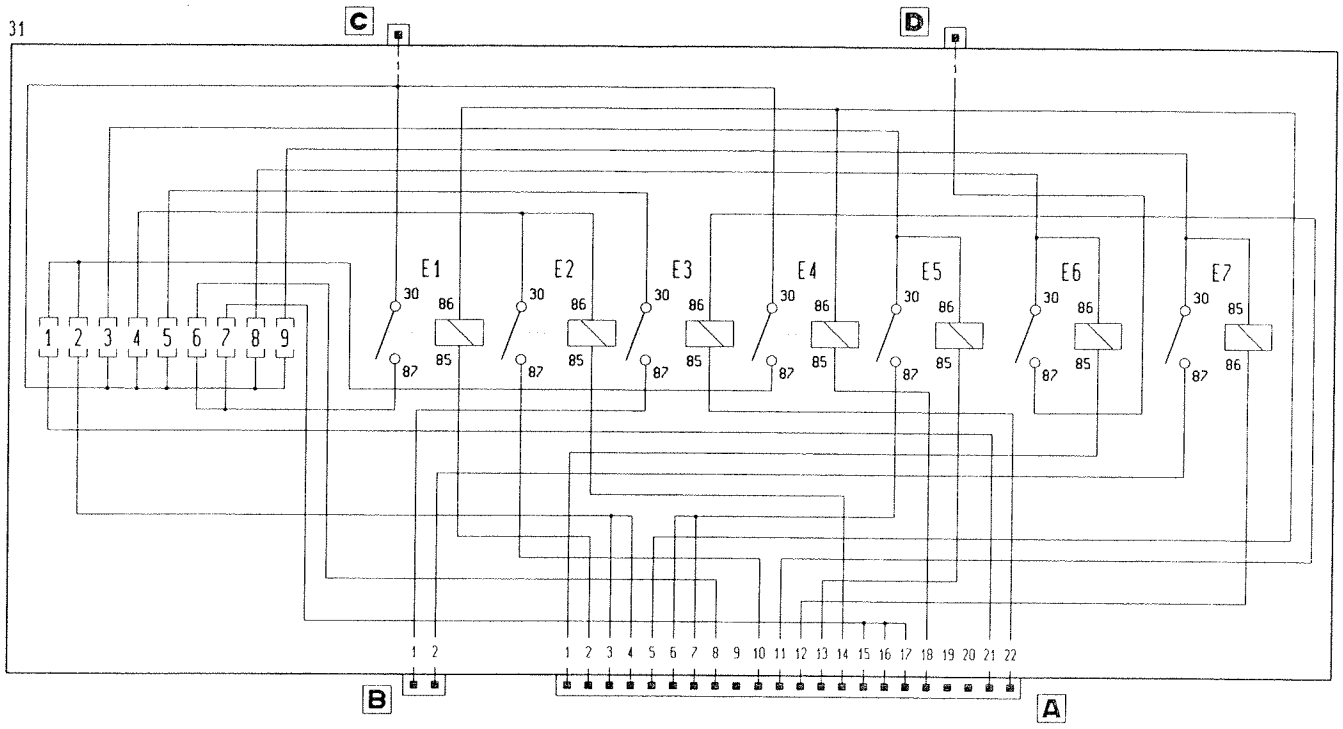

E1 Dipped headlamps relay feed
E2 Horn relay feed
E3 Compressor coupling relay feed
E4 Main beam headlamps relay feed
E5 Fog lights relay
E6 Engine cooling fan high speed relay feed
E7 Engine cooling fan low speed relay feed

P3U69IZ01

Copyright by Fiat Auto

Components key

1 Left front light cluster
2 Left fog lamp
3 Left front earth
3A Left front earth for anti-lock brakes (A.B.S.)
4 Electric horns
5 Left front brake pad wear sensor
6 Left side direction indicator
7 Battery
8 Main connector block
9 Earth on bodyshell
9A Earth on side panel for anti-lock brakes (A.B.S.)
10 Button on bonnet lid for engaging anti-theft device
11 Compressor coupling for air conditioning
12 Insufficient brake fluid level sensor
13 Reversing lights switch
15 Starter motor
16 Spark plugs
17 1st Engine cooling fan
17A 2nd Engine cooling fan
18 Engine cooling fan speed resistance
19 Sensor on left front wheel for anti-lock brakes (A.B.S.)
19A Connection between anti-lock brakes cable (A.B.S.) and sensor on left wheel
20 Alternator
21 Minimum engine oil level sensor
22 Engine coolant temperature sender unit
23 Sensor signalling minimum engine oil pressure
24 Barometric capsule
25 Air temperature sensor
26 Three stage pressure switch
26A Four stage pressure switch
27 Right front earth
28 Electric headlamp washer pump
29 Right fog lamp
30 Right front light cluster
31 Peripheral control unit (engine compartment)
E1 Dipped headlamps relay feed
E2 Horn relay feed
E3 Compressor coupling relay feed
E4 Main beam headlamps relay feed
E5 Fog lights relay
E6 Engine cooling fan high speed relay feed
E7 Engine cooling fan low speed relay feed
32A Connection between dashboard and left engine compartment cables
32B Connection between dashboard and left engine compartment cables
32C Connection between dashboard and left engine compartment cables
33A Connection between dashboard and right engine compartment cables
34 Anti-lock brakes (A.B.S.) electro-hydraulic control unit
35 Connection between engine compartment and electronic injection cables
36 Heated Lambda sensor
37 Idle adjustment actuator
38 Earth for electronic injection
39 Relay for inertia switch
40 E.G.R. solenoid valve
41 Petrol vapour cut out solenoid valve
42 30A fuse protecting electronic injection
43 Electronic earth
44 Power earth
45 Air flow meter
46 7.5A fuse protecting electronic injection
46A 7.5A fuse protecting electronic injection
47 Sensor on right front wheel for anti-lock brakes (A.B.S.)
47A Connection between anti-lock brakes (A.B.S.) cable and sensor on right wheel
48 10A fuse protecting heated Lambda sensor and air flow meter relay
48A 7.5A fuse protecting heated Lambda sensor
49 Electric fuel pump and heated Lambda sensor relay feed
50 Electronic injection system relay feed
51 Air flow meter relay feed
52 Ignition coil
53 Ignition coil
54 Ignition coil
55 Ignition coil
56 Ignition coil
57 Ignition coil
58 Injectors
59 1st Detonation sensor
60 2nd Detonation sensor
61 Engine coolant temperature sensor
62 Rpm sensor
63 Potentiometer on butterfly valve
64 40A fuse protecting heater plugs
65 Power module
66 Timing sensor
67 Electronic injection cables connection
68 Connection between dashboard and electronic injection cables
69 Engine services cable connection
70 H.T. distributor
71 Control unit for tow hook preparation
72 Fuel injection control unit
72A Fuel pump electronic control unit
73 Secondary connector block
73A 80A fuse protecting rear services
73B 60A protective fuse for I.G.E. control unit / junction unit
73C 30A fuse protecting ignition switch / anti-theft device
74 80A fuse protecting peripheral control unit (engine compartment)
75 Junction unit (dashboard)
E1 Ignition discharge relay
E2 Intermittent device for direction indicators / hazard warning lights
E3 Timer for headlamp washer
76 I.G.E. control unit
77 10A fuse protecting anti-lock brakes (A.B.S.)
78 Instrument panel
A Trailer direction indicator warning light
B Driver's side heated seat warning light
B1 Passenger's side heated seat warning light
C Heated rear windscreen warning light
D Fog lights warning light
E Rear fog lamps warning light
F Side lights warning light
F1 Instrument panel light bulbs
G Dipped headlamps warning light
H Main beam headlamps warning light
I Check summary warning light
L Left direction indicator warning light
L1 Right direction indicator warning light
J Seat belts not fastened warning light
K Battery recharging warning light
M Insufficient engine oil pressure warning light
N Handbrake / I.G.E. control unit warning light
O Insufficient brake fluid level warning light
P Anti-lock braking system failure warning light (A.B.S.)
Q A.S.R.system failure warning light
R AIR-BAG failure warning light
S Heater plugs warning light
T Voltmeter
U Electronic rev counter
V Fuel level gauge
V1 Fuel reserve warning light
X Milometer/trip meter
X1 Lancia-CODE failure warning light
Y Electronic tachometer
Y1 S.C.S. switch unit
W Water temperature gauge
W1 Engine coolant overheating warning light
Z Electronic automatic transmission gear selection display
Z1 Trip computer zeroing button
79 Connection between dashboard and courtesy light cables
80 Power earth in dashboard
81 Climate control fan (brushless)
82 Air recirculation motor
83 Windscreen wiper control unit
84 Single stage pressure switch (2959 V6 24v)
85 Infocenter control unit
87 Light for glove compartment / boot release controls
88 Diagnostic socket
89 Left rear view mirror
A Motor for folding left rear view mirror
B Motor for vertical adjustment of left rear view mirror
C Motor for horizontal adjustment of left rear view mirror
D Left rear view mirror heating resistance
90 Connection between dashboard and left front door cables
91 Speaker in left front door
92 Control panel for electric front/rear windows in left front door
93 Light in left front door
94 Left front electric window motor
95 Left front central locking geared motor and signalling of left front door open and anti-theft device on

Z Electronic automatic transmission gear selection display
Z1 Trip computer zeroing button
79 Connection between dashboard and courtesy light cables
80 Power earth in dashboard
81 Climate control fan (brushless)
82 Air recirculation motor
83 Windscreen wiper control unit
84 Single stage pressure switch (2959 V6 24v)
85 Infocenter control unit
87 Light for glove compartment / boot release controls
88 Diagnostic socket
89 Left rear view mirror
A Motor for folding left rear view mirror
B Motor for vertical adjustment of left rear view mirror
C Motor for horizontal adjustment of left rear view mirror
D Left rear view mirror heating resistance
90 Connection between dashboard and left front door cables
91 Speaker in left front door
92 Control panel for electric front/rear windows in left front door
93 Light in left front door
94 Left front electric window motor
95 Left front central locking geared motor and signalling of left front door open and anti-theft device on
96 Earth on carrier
97 Earth on floor
98 Ashtray light
99 Cigar lighter
100 Connection between dashboard and left longitudinal cables
101 Light dimmer
102 Exterior lights control unit
B Switch for side lights / number plate lights
C Switch for dipped headlamps / main beam headlamps
D Switch for parking lights
E Switch for ideogram lights
103 Switch control unit
A Fog lights switch
B Rear fog lamps control switch
C Headlamp alignment control unit
104 Steering column switch unit
A Switch for windscreen washer / headlamp washer
B Windscreen wiper control switch
C Horn control
D Switch for direction indicators / parking lights
E Headlamp flasher button
F Switch for main beam headlamps
G Switch for rearscreen wash/wipe
105 Ignition switch
106 Immobilizer aerial
107 Anti-theft device control unit
108 Immobilizer control unit
109D Distributing / mixing motor
109M Distributing / mixing motor
110 Vehicle interior air temperature sensor
111 Mixed airs sensor 1
112 Mixed air sensor 2
113 Solar temperature sensor
115 Controls for electrically adjustable rear view mirrors
116 Electrically operated sun roof electronic control unit
117 Switch signalling handbrake applied
118 Electrically operated sun roof motor
119A Connection between dashboard and right longitudinal cables
119B Connection between dashboard and right longitudinal cables
119C Connection between dashboard and right longitudinal cables
119D Connection between dashboard and right longitudinal cables
120 Connection between dashboard and right front door cables
121 Right rear view mirror
A Motor for folding right rear view mirror
B Motor for vertical adjustment of right rear view mirror
C Motor for horizontal adjustment of right rear view mirror
D Right rear view mirror heating resistance
123 Right front electric window control panel on right front door
124 Light in right front door
125 Right front electric window motor
126 Right front central locking geared motor and signalling of right front door open and anti-theft device on
127 Switch signalling seat belts not fastened
128 Timer for front courtesy light
129 Electrically operated sun roof end of travel switch
130 Electrically operated sun roof control button
131 Earth on steering column support
134 Solenoid valve for servotronik
135 Earth on floor (AIR-BAG signal)
137 Tailgate lock assembly
A Luggage compartment courtesy light switch and anti-theft device on
B Tailgate locking/unlocking motor
138 Electronic control unit for driver's electric seat with memory
138A Control panel for electrically adjustable driver's seat
138B Driver's seat backrest adjustment motor
138C Driver's seat height adjustment motor
138D Driver's seat height adjustment motor
138E Driver's seat sliding adjustment motor
138F Control panel for driver's seat programming
138G Driver's seat lumbar adjustment motor
139 Driver's side seat heated pad
140 Switch for driver's side seat heated pad
141 Connection between right longitudinal and right rear door cables
144 Light in right rear door
146 Right rear door central locking geared motor and signalling of right rear door open and anti-theft device on
148 Connection between left longitudinal and left seat cables
149 Connection between left longitudinal and left seat cables
150 Connection between left longitudinal and left rear door cables
151 Amplifier for radio
153 Light in left rear door
155 Left rear door central locking geared motor and signalling of left rear door open and anti-theft device on
156 Connection between right longitudinal and right seat cables
157 Connection between right longitudinal and right seat cables
158 Control panel for electrically adjustable passenger seat
158A Passenger seat sliding adjustment motor
158B Passenger seat height adjustment motor
158C Passenger seat height adjustment motor
158D Passenger seat backrest adjustment motor
158E Motor for passenger seat lumbar adjustment
159 Switch for passenger seat heater pad
160 Passenger seat heater pad
162 Luggage compartment courtesy light
163 Left rear courtesy light
164 Left rear speaker
165 Heated rear windscreen
165A Earth for heated rear windscreen
166 Amplifier for aerial in rearscreen
166A Rear cables connection in rearscreen
167 Fuel level gauge
168 Electric fuel pump
169 Right rear speaker
170 Right rear courtesy light
171 Additional brake lights warning light
172 Right rear light cluster on fixed section
173 Right rear earth
174 Right rear light cluster on moving section

269 Connection between dashboard and receiver cables
271 Brake lights switch
272 Driver's AIR-BAG connection
272A Connector for clock spring
273 Passenger AIR-BAG connection
274 Connection between dashboard and AIR-BAG cables
275 AIR-BAG control unit
276 Left seat belt pre-tensioner
277 Right seat belt pre-tensioner
278 Diagnostic socket for AIR-BAG
281 Front courtesy light
282 Electro-chromic internal rear view mirror
283 Passenger sun blind with light
284 Preparation for electrically operated sun roof
290 Left front air vent controls light
291 Left centre air vent controls light
292 Right centre air vent controls light
293 Right front air vent controls light
295 Radio cables connection
296 Radio cables connection
297 Warning light for alarm
298 Electric front windows control unit
300 Central locking electronic control unit
301 Solenoid valve group
302 Switch control unit
306 Electronic automatic transmission audible signal
307 Electronic automatic transmission audible signal control switch
315 Electronic automatic transmission gear selector control unit (ZF)
316 Electronic automatic transmission diagnostic socket
317 Connection between electronic automatic transmission and electronic injection cables
318 Connection between electronic automatic transmission and dashboard cables
319 Preparation for Kick-Down
320 Automatic transmission gear selector lever trim
321 Motor for controlled damping suspension (S.C.S.) left front
322 Motor for controlled damping suspension (S.C.S.) right front
323 Accelerometer for controlled damping suspension (S.C.S.)
334 Connection between electronic injection cable and injector bridge
340 Right front brake pad wear sensor
341 Right side direction indicator
342 Electric windscreen washer pump
343 40A starter relay
344 Connection between dashboard and anti-lock brakes cables (A.B.S.)
345 Right front earth
354 Electric diesel pump
355 Instrument injector
356 Solenoid valve on diesel pump
357 Heater plugs control unit
358 Engine cut out solenoid on injection pump
359 Heater plugs
361 Switch on clutch pedal
364 Potentiometer on accelerator pedal
367 Left headlamp alignment
368 Right headlamp alignment
369 Connection between electronic injection and left longitudinal cables
374 Diagnostic socket for Fiat / Lancia tester
376 Modular manifold solenoid valve
377 Phase transformer
378 Modular manifold relay feed
380 Relay for phase transformer
382 Heated diesel filter relay feed (P.T.C.)
383 15A fuse protecting heated diesel filter (P.T.C.)
384 Thermal contact for heated diesel filter (P.T.C.)
385 Heated diesel filter resistance (P.T.C.)
386 Connection for cables to water in fuel filter sensor
401 Electronic automatic transmission gear selector control unit (AISIN)
413 Connection to solenoid valve group
414 Butterfly valve position potentiometer
415 Gear position selector
416 Gear position selector
417 Engine rpm sensor
418 Vehicle speed sensor
420 Gearbox oil temperature sensor
422 Connection between dashboard and left longitudinal cables
423 Rearscreen wiper relay feed
424 Rearscreen wiper control switch
425 Right luggage compartment light
426 Speaker in tailgate (woofer)
427 Electric pump for rearscreen washer
428 Connection between longitudinal/left tailgate speaker cables
429 7.5A fuse protecting heated rear view mirrors
430 Connecting diode for handbrake applied/insufficient brake fluid system
431 Direction indicators when doors are locked
432 20A protective fuse for ignition switch relay
433 Rearscreen wash/wipe motor
434 15A fuse protecting current socket
435 Current socket relay feed
436 Current socket
437 Preparation for radio phone
438 Dual function speaker for radio and radio phone in front door
440 Driver's seat control unit initilization line
441 Driver's seat retracted position sensor
442 Driver's seat forwards position sensor
443 Connection between right longitudinal and electrically adjustable easy-enter driver's seat cables
444 Connection between right longitudinal and electrically adjustable easy-enter passenger seat
445 Electrically adjustable passenger seat control unit
446 Passenger seat control unit initialization line
447 Pasenger seat retracted position sensor
448 Passenger seat forwards position sensor
449 Left electric windows control panel on left front door
450 Micro-switch for electric windows in left glass
451 Right electric windows control panel on left door
452 Micro-switch for electric windows in right glass
453 Connection for driver's seat position sensors
454 Connection for passenger seat position sensors
476 80A fuse protecting heater plugs control unit
477 Electric fuel pump relay
478 Fuel pressure regulator
479 Fuel temperature sensor
480 Turbo pressure regulator
481 Fuel pressure sensor
482 Electric fuel pump/fuel level gauge
483 50A fuse protecting heater plugs control unit
484 Over-boost solenoid valve
485 Modular manifold solenoid valve
486 Relay for modular manifold solenoid valve
487 Connection for aerial supply
488 150A maxi fuse
489 60A protective fuse for anti-lock brakes (A.B.S.)

3U75IZ

Cable colour code

A	Light blue	**GR**	Yellow-Red
B	White	**GV**	Yellow-Green
C	Orange	**HG**	Grey-Yellow
G	Yellow	**HN**	Grey-Black
H	Grey	**HR**	Grey-Red
L	Blue	**HV**	Grey-Green
M	Brown	**LB**	Blue-White
N	Black	**LG**	Blue-Yellow
R	Red	**LN**	Blue-Black
S	Pink	**LR**	Blue-Red
V	Green	**LV**	Blue-Green
Z	Violet	**MB**	Brown-White
AB	Light blue-White	**MN**	Brown-Black
AG	Light blue-Yellow	**NZ**	Black-Violet
AN	Light blue-Black	**RB**	Red-White
AR	Light blue-Red	**RG**	Red-Yellow
AV	Light blue-Violet	**RN**	Red-Black
BG	White-Yellow	**RV**	Red-Green
BL	White-Blue	**SN**	Pink-Black
BN	White-Black	**VB**	Green-White
BR	White-Red	**VN**	Green-Black
BV	White-Green	**VR**	Green-Red
BZ	White-Violet	**ZB**	Violet-White
CA	Orange-Light blue		
CB	Orange-White		
CN	Orange-Black		
GN	Yellow-Black		
GL	Yellow-Blue		

175 Connection between left longitudinal and tailgate cables
175S Left no. plate light
175D Right no. plate light
176 Geared motor for locking / unlocking luggage compartment tailgate
177 Left rear light cluster on moving section
178 Left rear earth
179 Left rear light cluster on fixed section
180 Heated rear windscreen relay feed
181 Connection between left longitudinal and right longitudinal cables
182 Rear connector block
183 Relay for driver's seat heater pad
183A 7.5A fuse protecting driver's heated pad relay
184 Relay for passenger seat heater pad
184A 7.5A fuse protecting passenger heated pad relay
185 Relay for electrically adjustable driver's seat
185A 30A fuse protecting electrically adjustable passenger seat
186 Relay for electrically adjustable passenger seat
186A 30A fuse protecting electrically adjustable driver's seat
188 25A fuse protecting boot release electro-magnet
189 30A fuse protecting heated rear windscreen
190 Relay for locking / unlocking luggage compartment tailgate
191 Earth for inertia switch
192 Inertia switch
193 Sensor on left rear wheel for anti-lock brakes (A.B.S.)
193A Connection between anti-lock brakes (A.B.S) cable and sensor on left rear wheel
194 Sensor on right rear wheel for anti-lock brakes (A.B.S.)
194A Connection between anti-lock brakes (A.B.S.) cable and sensor on right rear wheel
195 Fuel filler flap release motor
196 Preparation for trailer
198A Diagnostic socket
199 Alarm siren
200 Controlled damping suspension electronic control unit (S.C.S)
219 Earth on centre tunnel
225 Left floor light
226 Right floor light
227 Right front speaker
228 Left front speaker
266 Infra red receiver for anti-theft device
267 Volumetric sensors for anti-theft device
269 Connection between dashboard and receiver cables
271 Brake lights switch
272 Driver's AIR-BAG connection
272A Connector for clock spring
273 Passenger AIR-BAG connection
274 Connection between dashboard and AIR-BAG cables
275 AIR-BAG control unit
276 Left seat belt pre-tensioner
277 Right seat belt pre-tensioner
278 Diagnostic socket for AIR-BAG
281 Front courtesy light
282 Electro-chromic internal rear view mirror
283 Passenger sun blind with light
284 Preparation for electrically operated sun roof
290 Left front air vent controls light
291 Left centre air vent controls light
292 Right centre air vent controls light
293 Right front air vent controls light
295 Radio cables connection
296 Radio cables connection
297 Warning light for alarm
298 Electric front windows control unit
300 Central locking electronic control unit
301 Solenoid valve group
302 Switch control unit
306 Electronic automatic transmission audible signal
307 Electronic automatic transmission audible signal control switch
315 Electronic automatic transmission gear selector control unit (ZF)
316 Electronic automatic transmission diagnostic socket
317 Connection between electronic automatic transmission and electronic injection cables
318 Connection between electronic automatic transmission and dashboard cables
319 Preparation for Kick-Down
320 Automatic transmission gear selector lever trim
321 Motor for controlled damping suspension (S.C.S.) left front
322 Motor for controlled damping suspension (S.C.S.) right front
323 Accelerometer for controlled damping suspension (S.C.S.)
334 Connection between electronic injection cable and injector bridge
340 Right front brake pad wear sensor
341 Right side direction indicator
342 Electric windscreen washer pump
343 40A starter relay
344 Connection between dashboard and anti-lock brakes cables (A.B.S.)
345 Right front earth
354 Electric diesel pump
355 Instrument injector
356 Solenoid valve on diesel pump
357 Heater plugs control unit
358 Engine cut out solenoid on injection pump
359 Heater plugs
361 Switch on clutch pedal
364 Potentiometer on accelerator pedal
367 Left headlamp alignment
368 Right headlamp alignment
369 Connection between electronic injection and left longitudinal cables
374 Diagnostic socket for Fiat / Lancia tester
376 Modular manifold solenoid valve
377 Phase transformer
378 Modular manifold relay feed
380 Relay for phase transformer
382 Heated diesel filter relay feed (P.T.C.)
383 15A fuse protecting heated diesel filter (P.T.C.)
384 Thermal contact for heated diesel filter (P.T.C.)
385 Heated diesel filter resistance (P.T.C.)
386 Connection for cables to water in fuel filter sensor
401 Electronic automatic transmission gear selector control unit (AISIN)
413 Connection to solenoid valve group
414 Butterfly valve position potentiometer
415 Gear position selector
416 Gear position selector
417 Engine rpm sensor
418 Vehicle speed sensor
420 Gearbox oil temperature sensor
422 Connection between dashboard and left longitudinal cables
423 Rearscreen wiper relay feed
424 Rearscreen wiper control switch
425 Right luggage compartment light
426 Speaker in tailgate (woofer)
427 Electric pump for rearscreen washer
428 Connection between longitudinal/left tailgate speaker cables
429 7.5A fuse protecting heated rear view mirrors
430 Connecting diode for handbrake applied/insufficient brake fluid system
431 Direction indicators when doors are locked
432 20A protective fuse for ignition switch relay
433 Rearscreen wash/wipe motor
434 15A fuse protecting current socket
435 Current socket relay feed
436 Current socket
437 Preparation for radio phone
438 Dual function speaker for radio and radio phone in front door
440 Driver's seat control unit initilization line
441 Driver's seat retracted position sensor
442 Driver's seat forwards position sensor
443 Connection between right longitudinal and electrically adjustable easy-enter driver's seat cables
444 Connection between right longitudinal and electrically adjustable easy-enter passenger seat
445 Electrically adjustable passenger seat control unit
446 Passenger seat control unit initialization line
447 Pasenger seat retracted position sensor
448 Passenger seat forwards position sensor
449 Left electric windows control panel on left front door
450 Micro-switch for electric windows in left glass
451 Right electric windows control panel on left door
452 Micro-switch for electric windows in right glass
453 Connection for driver's seat position sensors
454 Connection for passenger seat position sensors
476 80A fuse protecting heater plugs control unit
477 Electric fuel pump relay
478 Fuel pressure regulator
479 Fuel temperature sensor
480 Turbo pressure regulator
481 Fuel pressure sensor
482 Electric fuel pump/fuel level gauge
483 50A fuse protecting heater plugs control unit
484 Over-boost solenoid valve

485
486
487
488
489

Cabl

A
B
C
G
H
L
M
N
R
S
V
Z
AB
AG
AN
AR
AV
BG
BL
BN
BR
BV
BZ
CA
CB
CN
GN
GL

page

RADIO NAVIGATOR

INTRODUCTION 1

- Warnings 2
- Anti-theft protection 2
- Main specifications of the radio navigation system (navigation) 4
- Main specification of the radio navigation system (radio operation) 6
- Main specifications of the radio navigation system (cassette and CD player option) 7
- Tone adjustment 10

NAVIGATION FUNCTION 12

- Foreword 12

ADDRESS INPUT 13

- Town/area 13
- Street 15
- Junction 16
- Centre 16
- Programming the destination 16
- Fast route 17
- Short route - own selection 17
- Calculating the route 17
- Driving recommendations 18
- Bottleneck function 19
- Interruption in driving or entering intermediate destination 19
- Emission of voice simulator road directions 19
- Navigation info menu 20
- Route 20
- Position 21
- Method 21
- Destinations 21

DESTINATION MEMORY 21

- Order destinations list 22
- Alphabetical destinations list 22
- Reorganization 22
- Current destination memory 23
- Current position memory 23
- Cancelled destination 23

SPECIAL DESTINATIONS 24

- Current surroundings 24
- Proximity of destination 24
- Place 25
- Out of area destination 25

LAST DESTINATION 25

- Driving 25

SETTING 26

- Language 26
- Current position 26
- Time 29
- Display 30
- Calibration 30
- Changing navigation CD ROM 32

RADIO FUNCTION 33

- Setting radio operation 33

FM LISTENING 33

- Radio Data System (RDS) 33
- Auto-Best 33
- Selection from list of destinations 34
- Consulting the list of stations 34
- Automatic station search 35
- Manual station search 35
- Scan function (FM) 35
- Programming menu 36
- Programming broadcasters 36
- Recalling a programmed station 37
- FM setting 38
- RDS function - ON/OFF 38
- Regional listening function 38
- Regional listening ON/OFF 39
- Programming type detection function (PTY) 39
- Selecting a type of programme 39
- Deselecting a type of programme 40
- TP (Trafic Program) - Traffic news 41

- Listening to traffic news 42
- Silence/Reproduction 43
- Alarm message 43

AM LISTENING 44

- Automatic station search 44
- Manual station search 44
- Scan function (AM) 45
- Programming menu 45
- Programming a broadcaster 45
- Recalling a programmed broadcaster 46
- Autostore 47
- Starting autostore 48
- Selecting a broadcaster from the autostore list 48

Cont' ☞

Copyright by Fiat Auto

page

CASSETTE FUNCTION 48

- Cassette reproduction 48
- Inserting a cassette 48
- Ejecting a cassette 49
- Fast forward 49
- Fast rewind 49
- Forward search 49
- Backwards search 50
- Autoreverse 50
- Switching type of tape 51
- Scan function 51

- CC setting 51
- Dolby-B 49
- Skipping blank spaces 52

CD FUNCTION (Optional) 52

- Multiple CD player 52
- CD cartridge 52
- Changing cartridge 53
- CD reproduction 55
- Forward/backwards scanning 57
- Fast forward/rewind 58
- Searching for tracks using Scan function 58
- CD settings 58
- Random 59
- Repeat 60
- CD error 60

RADIO NAVIGATION FAULT DIAGNOSIS 61

REMOVING-REFITTING RADIO-NAVIGATION SYSTEM 65

REMOVING-REFITTING CD-ROM FOR RADIO NAVIGATION SYSTEM 67

LOCATION OF COMPONENTS ON VEHICLE 69

AIR BAG - NEW FEATURES

INTRODUCTION 70

"PPD" PASSENGER PRESENCE SENSOR 71

CONTROL UNIT FORAIR BAG SYSTEM, PRETENSIONERS AND PASSENGER PRESENCE SENSORE SENZA PASSEGGERO 72

FRONT SEAT 74

SYSTEM WITH SIDE BAG 75

- Control unit for Air Bag syste, pretensioners and passenger presence sensor (PPD) 75

page

- Side Bag modules 77
- Satellite deceleration sensors 79

SAFETY INSTRUCTIONS TO BE FOLLOWED FOR OPERATIONS ON VEHICLES EQUIPPED WITH AIR BAG/SIDE BAG SYSTEM 80

REMOVING-REFITTING FRONT SEAT WITH PASSENGER PRESENCE SENSOR AND SIDE BAG 81

DISMANTLING-REASSEMBLING FRONT SEAT WITH PASSENGER PRESENCE SENSOR AND SIDE BAG 83

REMOVING-REFITTING SIDE BAG MODULE 105

REMOVING-REFITTING SIDE BAG CABLE 106

EXHAUST GAS HEADLAMPS AND AUTOMATIC HEADLAMP ALIGNMENT CONTTOL 107

LANCIA CODE

Introduction 108

INSTRUMENT PANEL

- Instrument panel (petrol and automatic transmission versions) 109
- Description of cables and connectors 111
- Wiring diagram (1998 20v version) 113
- Main wiring diagram 114

JUNCTION UNIT

- Location of components in junction unit 115
- Description of cables and connectors 116
- List of fuses and main circuits protected 118

CRUISE CONTROL

Introduction 119

Fiat Auto S.p.A.
D.M.C. - M.P.S.
Servizi al Cliente - Post Vendita
10040 Volvera - TO (Italia) - Largo Senatore G. Agnelli, 5
Print no. 506.475/25 - Aprile 1999 - 400
Printed by Satiz S.p.A. - Turin (Italy)
Order No. 604.46.450

page

RADIO NAVIGATION SYSTEM

INTRODUCTION 1

- Warnings 2
- Antitheft protection 2
- Main features of the radio navigation system) 4
- Main features of the radio navigation system (Radio operation) 6
- Main features of the radio navigation system (Tape player and opt. CD player operation.) 7
- Adjusting tone 10

NAVIGATION FUNCTION 12

- Foreword 12

ADDRESS INPUT 13

- Town/city 13
- Street 15
- Crossroads 16
- Centre 16
- Memorising a destination 16
- Fast route 17
- Short route - own choice 17
- Calculating a route 17
- Driving recommendations 18
- Traffic jam function 19
- Breaking a journey or entering an intermediate route 19
- Issuing vocal route instructions 19

- Navigation info menu 20
- Route 20
- Position 21
- Mode 21
- Destinations 21

DESTINATION MEMORY 21

- Listing destinations in order 22
- Listing destinations alphabetically 22
- Reordering 22
- Current destination memory 23
- Current position memory 23
- Cancelling a destination 23

SPECIAL DESTINATIONS 24

- Current surroundings 24
- Distance to destination 24
- Place 25
- Destination outside region 25

LAST DESTINATION 25

- Travel guide 25

SETTING 26

- Language 26
- Current position 26
- Time 29
- Display contrast 30
- Calibration 30
- Changing navigation CD-rom 32

RADIO FUNCTION 33

- Setting radio mode 33

FM BROADCASTS 33

- Radio Data System (RDS) 33
- Auto-Best 33
- Selecting from the list of destinations 34
- Consulting the list of stations 34
- Automatic station search 35
- Manual station search 35
- SCAN function (FM) 35
- Store menu 36
- Storing stations 36
- Calling up a stored station 37
- Setting FM 38
- RDC function - ON/OFF 38
- Region broadcast function 38
- Regional broadcast ON/OFF 39
- Programme type function (PTY) 39

- Selecting a programme type 39
- Deselecting a programme type 40
- TP (Trafic Program) - Information on road traffic conditions 41
- Traffic news broadcasts 42
- Mute/play 43
- Alarm message 43

AM BROADCASTS 44

- Automatic station search 44
- Manual station search 44
- SCAN function (AM) 45
- Store menu 45
- Storing a station 45
- Calling up a stored station 46
- Autostore 47
- Starting autostore 48
- Selecting a station from the autostore list 48

Cont ☞

Copyright Fiat Auto

	page
CASSETTE FUNCTION	48
- Playing a cassette	48
- Inserting a cassette	48
- Ejecting a cassette	49
- Fast-forwarding	49
- Fast rewinding	49
- Forward track search	49
- Backward track search	50
- Autoreverse	50
- Switching between tape types	51
- Scanning tracks	51
- Setting CC	51
- Skipping blanks	52
- Dolby-B	49
CD FUNCTION (Options)	52
- Multiple CD player	52
- CD loader	52
- Changing/scanning loader	53
- Playing CDs	55
- Forward/backward track scanning	57
- Fast forward/backward search	58
- Searching for tracks using Scan	58
- Setting CDs	58
- Random (Random track search)	59
- Repeat	60
- CD error	60
NAVIGATION SYSTEM TESTING	61
REMOVING-REFITTING CAR RADIO-NAVIGATION SYSTEM	65
REMOVING-REFITTING CD-ROM FOR NAVIGATION SYSTEM	67
COMPONENT LOCATION ON VEHICLE	69
AIR BAG - NEW CONTENTS	
INTRODUCTION	70
PASSENGER PRESENCE SENSOR "PPD"	71
FRONT SEAT	72
ECU FOR AIR BAG, PRETENSIONERS AND PASSENGER PRESENCE SENSOR	73
SYSTEM WITH SIDE BAG	73
- ECU for airbag, pretensioners and passenger presence sensor system	75
- Satellite deceleration sensors	77
- Sidebag modules	77
SAFETY PRECAUTIONS FOR INTERVENTIONS ON VEHICLES FITTED WITH AIRBAGS/SIDE BAGS	79
REMOVING-REFITTING FRONT SEAT WITH PASSENGER PRESENCE SENSOR AND SIDE BAG	80
DISMANTLING-FITTING FRONT SEAT WITH PASSENGER PRESENCE SENSOR AND SIDE BAG	82
GAS DISCHARGE HEADLAMPS AND AUTOMATIC HEADLAMP ALIGNMENT CORRECTOR	82

Introduction

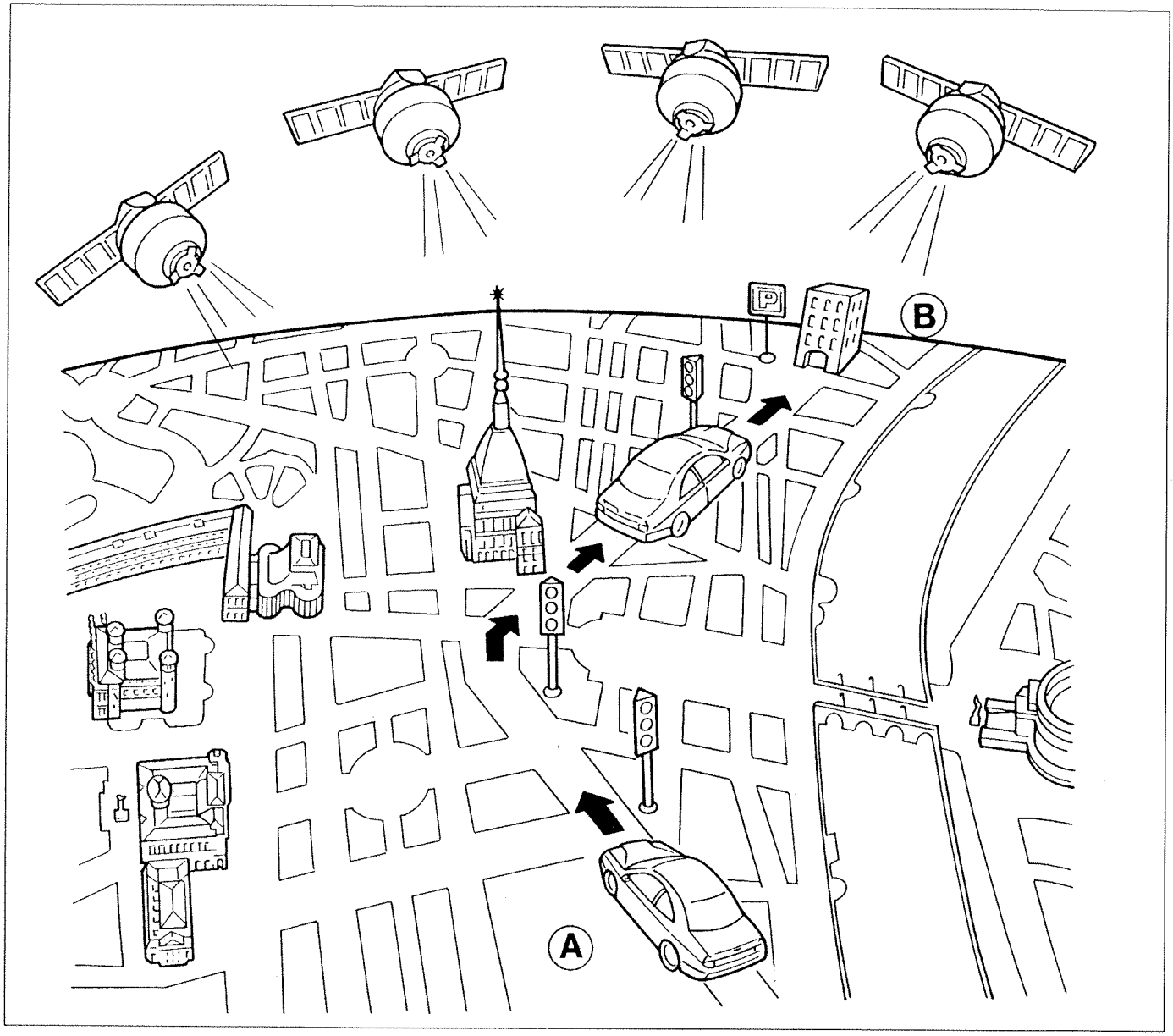

P3U01NL01

The LANCIA k 1998 range is fitted with a mobile navigation system known as the BOSCH RADIO NAVIGATION SYSTEM 2 (R.N.S.2). This is built into the car's normal radio.

The G.P.S. (Global Positioning System) uses satellites launched into orbit about ten years ago. It can be used to identify the position of an object on the ground (car, ship, aeroplane) with great precision.

The G.P.S. system uses 21 satellites, plus 3 spare satellites. In order to determine the car's exact position on the ground, it must be able to receive signals from at least 4 satellites simultaneously. Precision may range from 300 to 20m.

Signals sent from satellites must be matched with a good map read by a CD ROM located in the car. In order to direct the driver from point A to point B, a microprocessor inside the navigation system must be able to identify its exact position on the ground. But it will never be able to indicate turns, crossroads and distances unless it has information on all the roads connecting points A and B.

This is the main difference between car systems and the very widespread, budget systems used for air or sea navigation.

Copyright Fiat Auto

55.

Air and sea systems provide a route as the crow flies, i.e. the shortest distance between two points, whereas the route required by a car driver:
- could be much more winding than a straight line;
- could be more than one;
- is subject to the rules of the highway code.

The car system consists of the following components:
- a radio set with 2 FM tuners, 1 AM tuner, cassette player, CD changer (option), high power output, multilingual matrix and MMI (Man Machine Interface) display (6 languages: Italian, English, French, German, Spanish and Dutch).
- The navigation device - with 8-channel G.P.S., internal gyroscope, CD-Rom player and processor core - is fitted in the car luggage compartment.
- A compact, high gain G.P.S. aerial is located on the car roof.

WARNINGS

As the car driver, you are responsible for road traffic safety. Use the device properly so that you are in full control of your car at all times.

The navigation system gives you useful information to allow you to reach your chosen destination easily and safely.

For safety reasons, the driver must always enter a destination and car position data with the car at a standstill (car parked).

The navigation cannot warn you of the presence of stop signs, give-way signs, one-way streets, no U--turn signs, work in progress or provide any other information important for traffic safety.

If a driving recommmendation provided by the navigation system clashes with the Highway Code currently in force, always follow the Highway Code.

The CD multiplayer is a Category 1 laser product. You are at risk from invisible laser beams when the protective cover is open or damaged.

Do not remove the protective cover from the CD multiplayer. The CD multiplayer does not contain any parts that could be repaired by the user. Any maintenance operations must be carried out solely by qualified personnel or authorised service centres.

Never leave your radio navigation system Code Card in the car. Always put it in a safe place.

ANTITHEFT PROTECTION

When the power supply is cut off (by disconnecting the battery and removing the navigation system computer), the system turns on the antitheft protection. When the R.N.S. 2 is activated again, the display shows the message CODE. Before you can use the R.N.S. 2 again, you must enter a five-figure code. This number is shown on the Code Card, which is supplied together with the R.N.S. 2.

Self-adhesive labels are applied inside the car windows in visible positions. Never leave the radio navigation system Code Card in the car. Always keep in a safe place.

Entering the security code number

Turn on the radio navigation system by pressing key ON. The display will show the message CODE. Use keys ◀/▶ to enter the first figure of the code and confirm the figure by pressing knob (1).
The display shows the first number followed by 4 rows.
Use keys ◀/▶ to select the remaining numbers to form the code number. Confirm each time by pressing knob (1).

After entering the 5-figure code, check that the number shown on the display corresponds exactly to the code number prited on the CODE CARD.
If the number has been entered incorrectly, re-enter the entire code number. Confirm the correct code by pressing knob (1) for a further 2 seconds.
If an incorrect code number is confirmed, the message CODE will re-appear on the display.

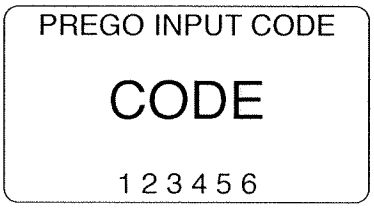

P3U03NL01

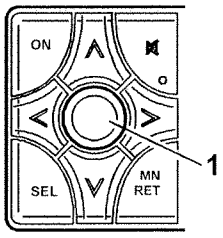

P3U03NL02

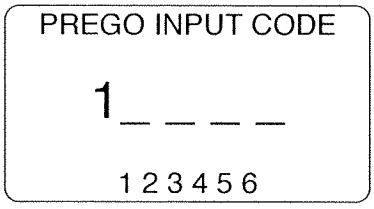

P3U03NL03

Repeat the correct code number input procedure.
Once the code has been entered incorrectly three times, the display shows the message ATTENDERE (WAIT) and the radio navigation device is locked for 10 minutes.
If the code is entered incorrectly on three more consecutive occasions, the radio navigation system remains locked for 60 minutes.

NOTE *The radio navigation system inhibition time counts down only when the set is turned on.*

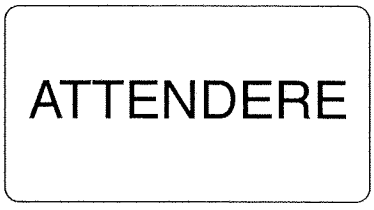

P3U03NL04

55.

MAIN FEATURES OF THE RADIO NAVIGATION SYSTEM
Functions of individual control elements: Navigation

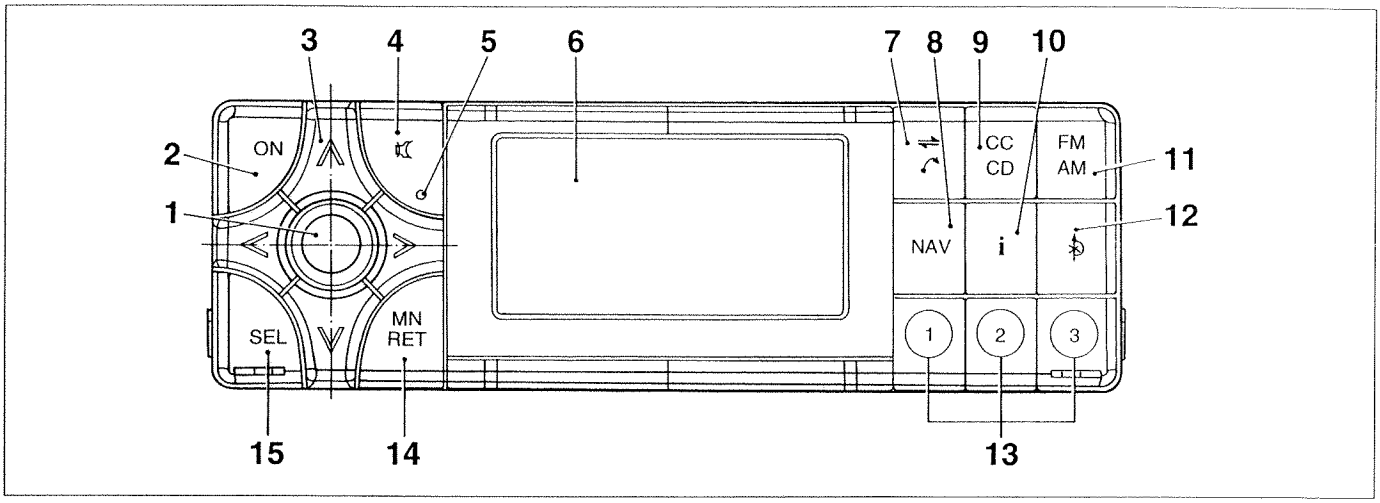

P3U02NL01

1. Knob with built-in key

Knob for adjusting volume of vocal directions
Short press: Repeat vocal directions; confirm data stored in list
Longer press: Confirm input

2. Key ON

Activate/de-active R.N.S. 2

3. Multifunction key ◀/▶/▼/▲

Select letters from input menu; select data stored in list; set exact time manually

4. Key ✕

Short press: Cancel vocal directions during traffic bulletins
Longer press: Cancel all subsequent traffic bulletins

5. Warning light

Indicate deactivation of vocal directions

6. Display

8. Key NAV

Radio navigation system/radio switch; stop radio navigation system temporarily

10. Key i

Repeat vocal directions; call up INFO menu

12. Key ♪

Recall initial status menu; if destination town/street is output, input menu will accept letters directly.

14. Key MN RET

Return to previous menu page

15. Key SEL

Preselection key for bass, treble, fader and balance; short press
Longer press: set an intermediate position for sound and volume functions

Features of navigation CD Rom player section.

- 8-channel receiver with automatic correction for channel reflection.
- Internal piezoelectric gyroscope.

ADDITIONAL INFORMATION SHOWN ON THE DISPLAY DURING NAVIGATION

- Distance to the next turn-off and total distance to destination.
- Estimated driving time to reach the next turn-off and estimated time to reach destination.
- Name of road car is currently travelling along.
- Name of next road to be taken
- If the car is driven off the computerised map: distance and direction to be taken to reach the destination.

The navigation unit is a car radio navigation system with gyroscopic sensor and G.P.S. Driving instructions are supplied in acoustic and graphic form. Detailed vocal advice with information on distance to the next turn-off is given on the radio by a pleasant, clear voice. More than six different languages may by loaded from a CD. Transfer from one language to another takes 30 seconds.

The system is equipped with a convenient Man Machine Interface (MMI), specially designed to be used by inexpert users. The destination is entered by hand by simply selecting from a personal list or selecting one of the points of interest in a town or city (airport, railway station, restaurants, hotels, etc.).

The system includes:

- a clock/calendar connected on line and synchronised via G.P.S.;
- smart power supply management;
- protection by means of a code (5-figure number) and anti-theft device.

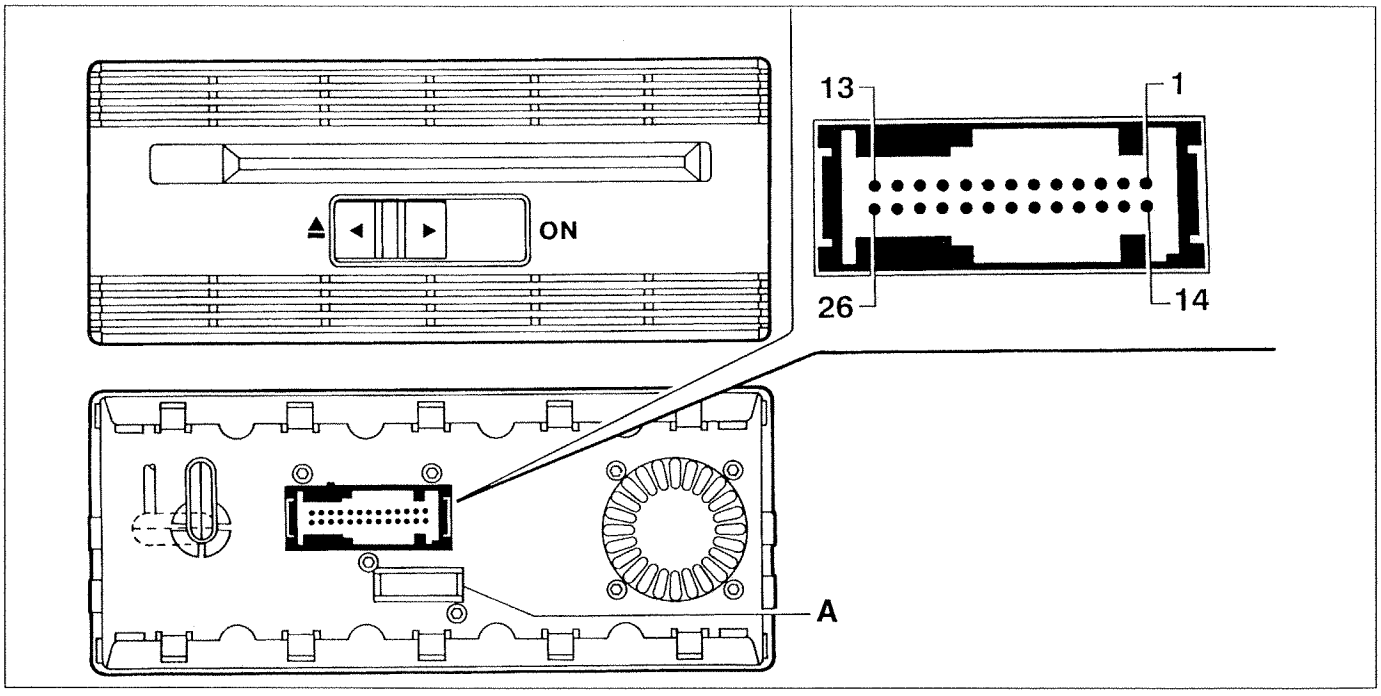

P3U05NL01

Key

1. Earth (GND)
2. CAN-1 H
3. CAN-1 L
4. Not connected
5. Not connected
6. Not connected
7. DFA-L
8. RFLS
9. Not connected
10. Not connected
11. CAN-2 H
12. Not connected
13. AF +
14. Battery voltage
15. IGN/ACC
16. Not connected
17. Not connected
18. Not connected
19. Not connected
20. DFA-R
21. Not connected
22. Not connected
23. Not connected
24. CAN-2 L
25. AF-Shield
26. AF

A. 5A fuse

Copyright Fiat Auto

55.

MAIN FEATURES OF THE RADIO NAVIGATION SYSTEM
Functions of individual control elements: Radio operation

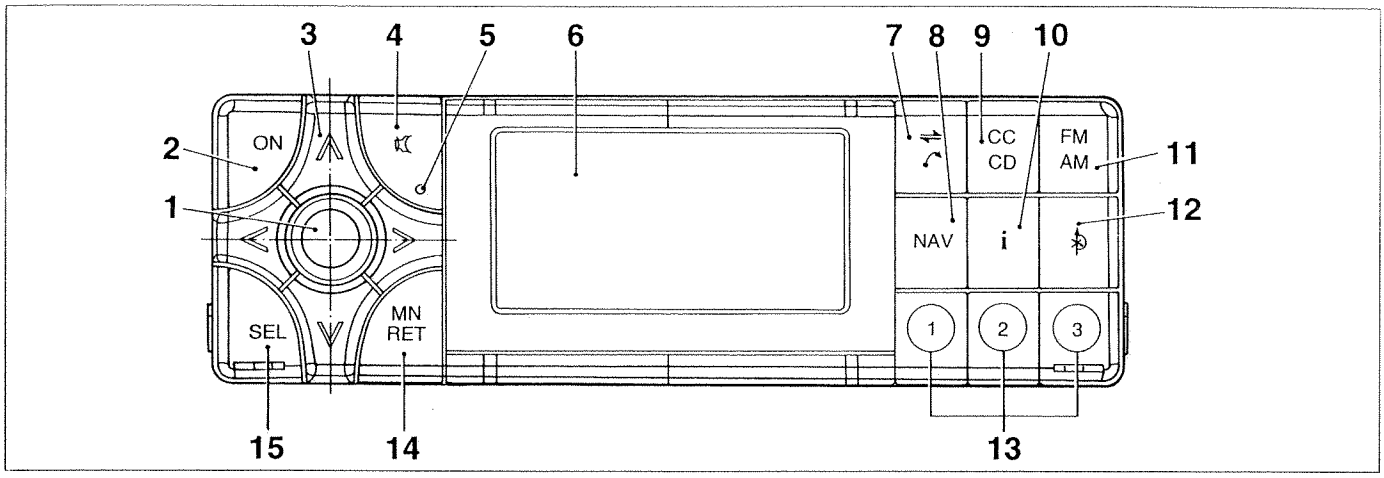

P3U02NL01

1. Knob with built-in key
Knob for adjusting volume, bass*, treble*, fader* and balance*
(* firstly press key SEL as many times as necessary to select the required function);
Short press to confirm function adjustment

2. Key ON
Activate/deactivate R.N.S. 2

3. Multifunction key ◀/▶/▼/▲/ ◀/▶
Station search key: automatic and manual; activate/deactivate RDS functions and regional broadcasts

▲/▼
Call up stored stations; select stations stored in the list
Longer press: activate SCAN function

4. Key
Activate/deactivate break for traffic news (TA)

5. Warning light
Indicate deacivation of break for traffic news (TA)

6. Display

10. Key i
Short press: Current position appears briefly on display, with R.N.S. 2 deactivated
Longer press: road the car is currently travelling along appears continuously on the display, in base menu with R.N.S. 2 deactivated.

11. Key FM AM
Set FM, OM and OL wavelengths; short press
Longer press: activate/de-activate break for traffic news (TA)

13. Key 1-2-3
Short press: Call up stations stored in first, second or third memory positions
Longer press: Store stations directly in first, second or third memory position

14. Key MN RET
Select positions from basic menu; return to previous menu

15. Key SEL
Preselection key for bass, treble, fader and balance; short press
Longer press: Set intermediate position for sound and volume functions

MAIN FEATURES OF THE RADIO NAVIGATION SYSTEM
Functions of individual control elements: Tape player and optional CD player operation

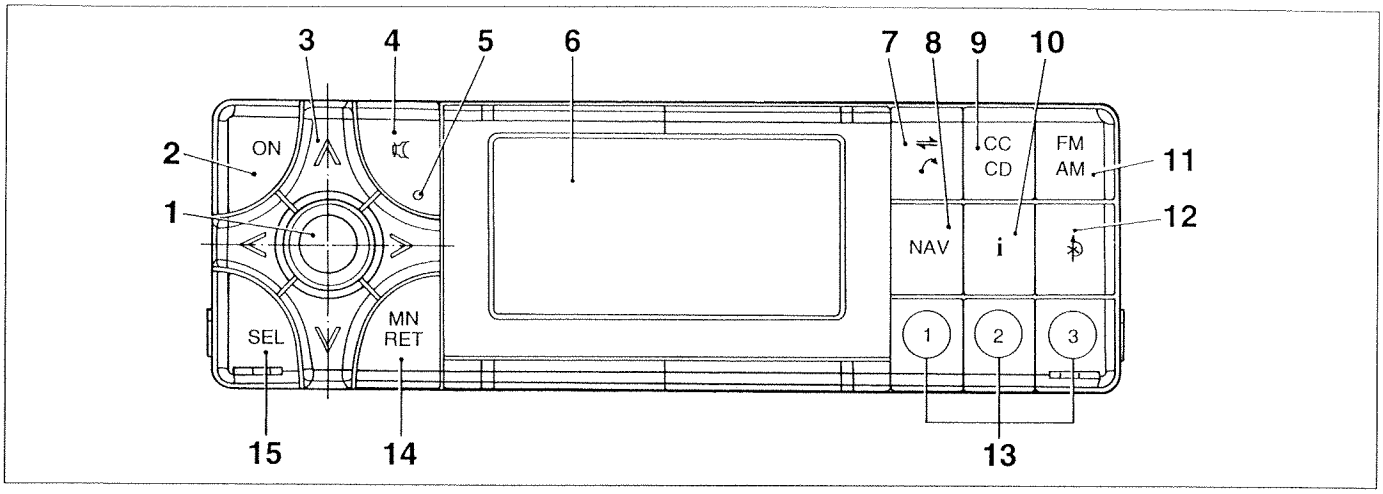

P3U02NL01

1. Knob with built-in key
Knob for adjusting volume, bass*, treble*, fader* and balance**
(* firstly press key SEL as many times as necessary to select the required function);
Short press to confirm function regulation

2. Key ON
Activate/deactivate R.N.S. 2

3. Multifunction key ◀/▶/▲/▼/
◀/▶
Cassette player: Forward/backward track search; activate/deactivate Dolby-B and Skip Blank
CD: Short press: Skip next/previous track; activate/deactivate random play and repeat
Longer press: Fast forward/rewind

▲/▼
Cassette player: Tape fast forward/rewind
CD: Select CD
▲
Longer press: Activate Scan function

4. Key
Activate/deactivate break for traffic news (TA)

5. Warning light
Indicate de-activation of break for traffic news (TA)

6. Display

7. Key
Cassette insertion and ejection; change cassette side (Autoreverse)

9. Key
Switch between cassette or CD play

10. Key
Short press: display shows current position brifly, with R.N.S. 2 deactivated
Longer press: Display shows road along which car is currently travelling continuously, in basic menu with R.N.S. 2 deactivated

11. Key
Long press: activate/deactivate break for traffic news (TA)

Copyright Fiat Auto

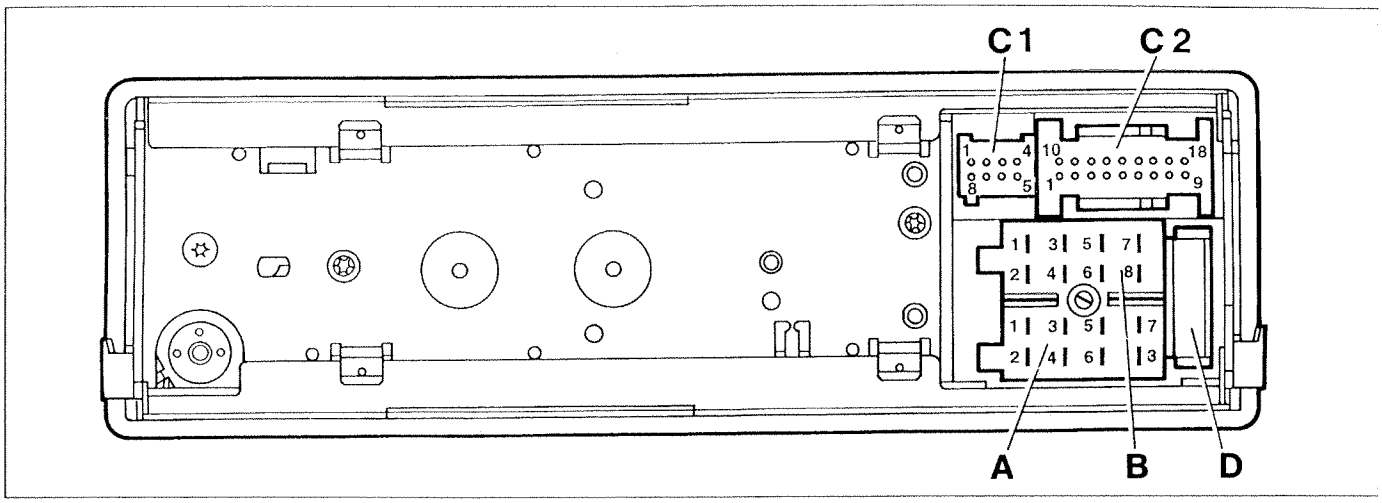

P3U08NL01

Key

Connector A

A1. AVC
A2. Not connected
A3. Telephone mute
A4. Fuel system (KL 30)
A5. Automatic aerial
A6. Night-time lighting (KL 58)
A7. Fuel system (ignition key-KL 15)
A8. Earth (KL 31)

Connector B

B1. Right rear speaker positive
B2. Right rear speaker negative
B3. Right front speaker positive
B4. Right front speaker negative
B5. Left front speaker positive
B6. Left front speaker negative
B7. Right front speaker positive
B8. Right front speaker negative

Connector C1

C1. CD-changer shielding
C2. CD-changer bus
C3. CD-changer earth
C4. CD-changer switch
C5. CD-changer power supply
C6. CD-changer-AF-GND
C7. CD-changer AF-Left input
C8. CD-changer AF-Right input

Connector C2

C1. Not connected
C2. Not connected
C3. Not connected
C4. Not connected
C5. Navigation-AF
C6. NAVIGATION shielding
C7. AF.-phone (*)
C8. Phone shielding (*)
C9. Not connected
C10. Not connected
C11. Not connected
C12. Not connected
C13. Not connected
C14. Navigation-AF+
C15. Not connected
C16. AF+(*)
C17. CAN-L
C18. CAN-H
D. 10A fuse

(*) available on request (audio level)

General specifications

- FM; SW; ML; LW;
- Radio station memory (10 memory positions per band)
- Double Turner RDS for dynamic broadcasts without Mute while searching through the list of alternative frequencies. A background receiver continously scans the FM band, stores all stations received and udates the station list. It shows the results on the display and makes the station with best reception available immediately.

- Hi-cut filtering, controlled by Multipath interference and field intensity.
- High-selectivity tuner.
- RF input with intermodulation - detection and suppression.
- RDS; AF; REG (alternative frequencies, regional programmes).
- TP/TA; EON Traffic information (traffic information, precedence to additional information).
- Full use of PTY function (programme type detection).
- Automatic tuning of radio stations.
- Scanning stored stations (preset scan).
- AM autostore (LW, MW, SW bands).
- Automatic and manual switching between Mono/Stereo.

Cassette section specifications

- Full logic with Autoreverse.
- Motorised tape load and eject.
- Automatic tape type selector.
- Track scan.
- Skip blank spaces on tape automatically (blank skip function).
- Tape noise reduction system (dolby B).

Specifications of Compact Disc section (opt.)

- 6-CD loader.
- CD changer control.
- CD selection.
- Track selection.
- Repeat CD.
- Repeat individual track.
- Track scan.
- Track fast forward/rewind (FF/REW).
- Random play.
- Random CD play.

Audio section specifications

- High power, low distortion amplifier 4x18 W. (RMS).
- Electronic digital step volume.
- Right/left balance.
- Fader.
- Separate bass/treble tone regulation.
- Possibiity of different bass/treble tone adjustment according to source.
- Automatic loudness.
- Audio mute
- Telephone mute.
- LCD (115x54 points; 68x33 mm; 6 rows of 19 characters).
- Anti-theft code.
- Automatic shut-off after 1 hour of operation with ignition key turned to STOP.
- Audio cassette slot lighting.
- CD-changer input.
- Dimmer.
- Protection against supply voltage reversal.
- Audio soft switch.
- Roger Beep (acoustic confirmation of key pressing).
- Clock/Date
- "i" key: visual and local information on current car location, operates with "Navigation" selection inactive.

Setting sound functions

Use key SEL to call up the following functions in order:
- bass;
- treble;
- fader;
- balance.

Bass, treble settings are stored separately for:
- AM/FM wavelengths;
- road traffic information (only during broadcast of traffic news);
- CD player;
- cassette player;
- navigation system.

Copyright Fiat Auto

55.

Fader and balance settings are stored for all audio functions.
Several audio settings may be stored for the navigation sytem. The values are shown on the display as numbers from -10 to +10; the value "0" corresponds to an average value.
When one of these functions is displayed, operate the volume regulation knob within 6 seconds, otherwise the displayed function will disappear and the main screen will reappear.

ADJUSTING TONE

Adjusting BASS

Repeatedly press key SEL to display the message BASSI (BASS); turn knob (1) left or right to reduce or increase bass tone.
Press knob (1) to store the new setting.

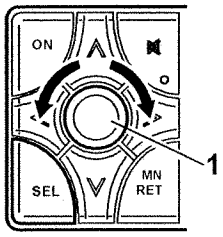

P3U10NL01



P3U10NL02

Adjusting TREBLE

Repeatedly press key SEL to display the message ACUTI (TREBLE); turn knob (1) left or right to reduce or increase treble
Press knob (1) to store the new setting.

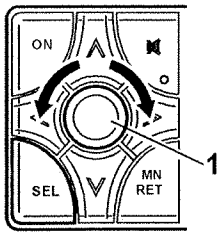



P3U10NL04

Adjusting FADER

Repeatedly press key SEL to display the message FADER; turn knob (1) left or right to reduce or increase fader.
Press knob (1) to store the new setting.

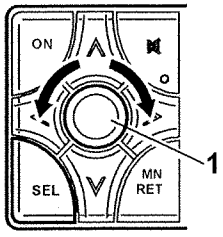

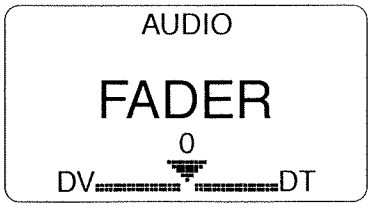

P3U10NL06

Adjusting BALANCE

Repeatedly press key SEL to display the message BALANCE turn knob (1) to the left to move the sound toward the left side of the car, turn knob (1) to the right to move the sound to the right side of the car.
Press knob (1) to store the new setting.

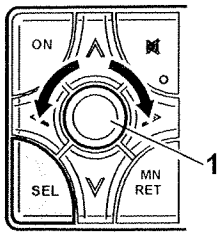

P3U10NL01

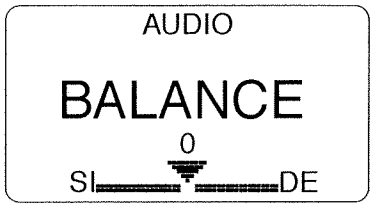

P3U11NL02

Setting all sound functions to average levels for all operating modes

Press key SEL for more than 2 seconds; functions: BASSI (BASS), ACUTI (TREBLE) FADER and BALANCE are set to average values, while volume is set to a preset value. The message RESET IMPOSTAZIONE SUONO (RESET SOUND SETTING).

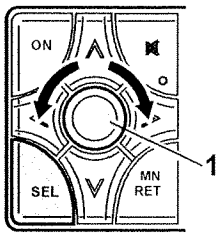



P3U11NL04

Road information (road on which car is currently travelling) from radio navigation system with radio, cassette player or CD function.

While using radio functions, it is possible to display the road on which the car is currently travelling along. To obtain this information, press key i for longer than 2 seconds.
If the car is on a road in the computer system, the name of the road appears on the screen. If the name is too long, only the first part is displayed. Briefly press key i to read the name in full. The road name appears for 6 seconds.
If the car is travelling along a road not contained on the CD-ROM or along a road without a name, the display shows the message NOME NON DISPONIBILE (NAME NOT AVAILABLE).

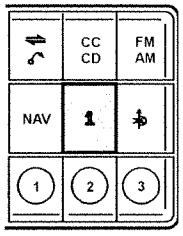

P3U11NL05



P3U11NL06

On the 3 main screens: radio; cassette player and CD-changer, one function for each main screen remains active in the basic menu. The TRASM.(STATION) menu item remains active in the radio mode basic menu; press knob (1) to call up a list of stations.



P3U11NL07

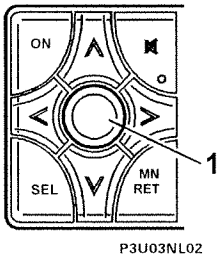

P3U03NL02

The IMPOSTAZIONI (SETTINGS) menu point remains active in the cassette player mode basic menu; press the key to call up the "IMPOSTAZIONE CC (CC SETTING)" menu

Copyright Fiat Auto

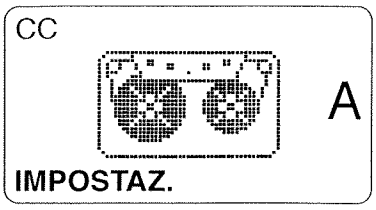

P3U12NL01

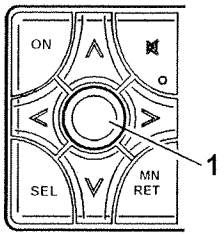

P3U03NL02

The CARICAT. (CD-CHANGER) menu item remains active in the CD-changer mode basic menu; press the knob to call up a list of loaders.

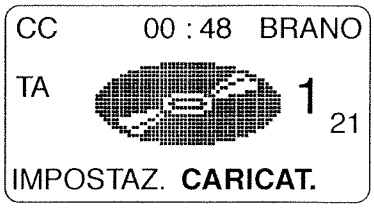

P3U12NL03

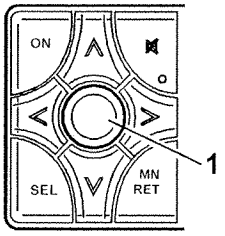

To remove the name of the road the car is currently travelling on from display briefly press key MN RET or press for longer than 2 seconds key i.
If key i is pressed for a time shorter than 2 seconds, the car's current position is displayed (for about six seconds)

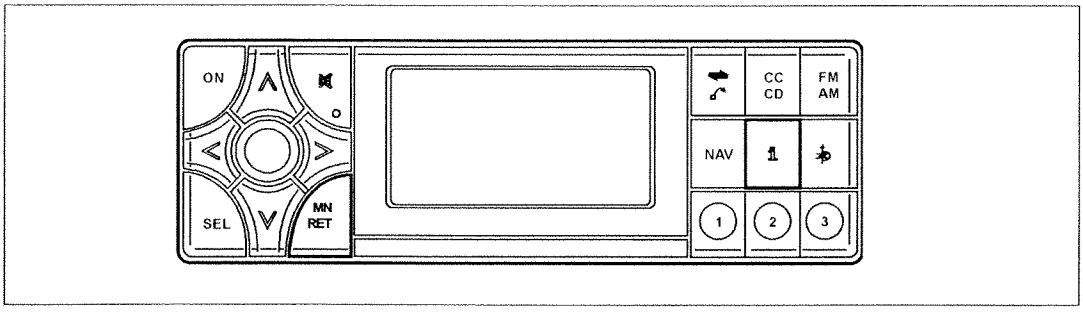

P3U12NL05

NAVIGATION FUNCTION

Foreword

The satellite radio navigation system works with the aid of very accurate maps. A destination may be selected directly by the user or stored in the microprocessor.
Route advice is given acoustically via the radio speakers and visually on a display by means of special pictograms.
The satellite navigation system is supported by a G.P.S. receiver.
Exact car location cannot be pinpointed until at least 4 satellites are within the reception range of the the G.P.S. receiver installed on the car.

DANGER OF ACCIDENTS: destinations and settings should only be entered with the car at a standstill. Even the slightest loss of vigilance while driving may cause an accident.

Press key NAV; the display shows the navigation basic menu with various destination input options and the systems setting menu is also displayed.

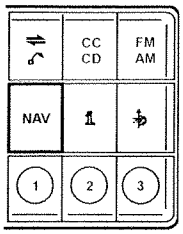

P3U13NL01

INPUT INDIRIZZO
MEMORIA DESTINAZ.
DESTINAZ. SPECIALI
ULTIMA DESTINAZ.
GUIDA TURISTICA
IMPOSTAZIONE/SET.

- INPUT INDIRIZZO (ADDRESS INPUT): enter required address or destination.
- MEMORIA DESTINAZIONI (DESTINATION MEMORY): call up the microprocessor memory menu.
- DESTINAZIONI SPECIALI (SPECIAL DESTINATIONS)
- ULTIMA DESTINAZIONE (LAST DESTINATION): appears only when a destination has been entered previously.
- GUIDA TURISTICA (TOURIST GUIDE): Appears only when the navigation CD-Rom contains this function. If the CD-ROM does not contain this function, the message "GUIDA TURISTICA (TOURIST GUIDE)" does not appear on the basic menu.
- IMPOSTAZIONE/SETTING: Appears only when the navigation system cd-rom supports this function.

ADDRESS INPUT

Press key NAV to enter navigation mode and the selection bar highlights the submenu INPUT INDIRIZZO (ADDRESS INPUT); press knob (1) to enter the submenu.

INPUT INDIRIZZO
MEMORIA DESTINAZ.
DESTINAZ. SPECIALI
ULTIMA DESTINAZ.
GUIDA TURISTICA
IMPOSTAZIONE/SET.

P3U13NL03

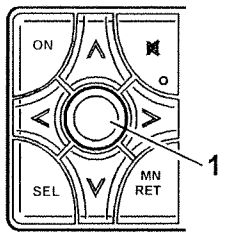

P3U03NL02

Town/city

Enter the submenu input indirizzo (address input), when the selection bar highlights CITTÀ/LOCALITÀ (TOWN-/CITY)
Press key (1) to enter the submenu and enter town/city, the marker start position is on the letter H.
Use keys ◀; ▶; ▼; ▲ to select the letter for the required town/city (background will be marked). The selected letter appears double size at the top right of the display.

INPUT INDIRIZZO:

CITTA'/LOCALITA'
VIA
CENTRO

P3U13NL05

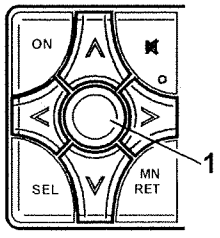

P3U13NL06

CITTA'/LOCALITA': **R**
TORINO

ABCDEFGHIJKLMNOPQ
RSTUVWXYZÄÖÜ( )Ir#
1234567890 -/:.,&

P3U13NL07

55.

Press knob (1) to eliminate the input row and display the first town or city name from the list in the memory. The town or city most closely corresponding to the letters entered is displayed.
To delete a letter entered, select sign 5 and press knob (1).
Press key 5 for the next town or city letter to be accepted by the input row directly without the need to go through the letter field.



P3U14NL01

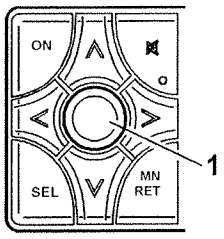

P3U03NL02

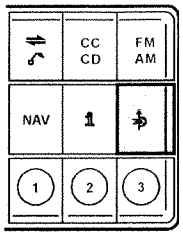

P3U14NL03

To confirm data input, press knob (1) for more than 2 seconds; an acoustic confirmation signal is heard and a list of towns/cities appears on the display
If the required town or city is not first on the list, scroll through the list in one of two ways:

1. use keys 6; 7; to position the selection bar on the required town or city name and press the knob;
2. while in the town or city list, use keys 6; 7; to highlight the sign T to skip a page by pressing knob (1); The sign T remains highlighted to allow another page to be skipped.

To return to the previous page, use keys 6; 7; to highlight the sign and press knob (1).
With page down sign T highlighted, press key 6; to select the first town or city name on the next page; when the page up sign is highlighted (press key 7) to select the last town or city name present on the previous page.



P3U14NL04

After selecting the required town or city, the display shows the following menu items:
- VIA (STREET);
- CENTRO (CENTRE).

NOTE *Selection of menu items: VIA (STREET), CENTRO (CENTRE) depends on the number of inhabitants in the selected town or city.*



Street

Use keys ▼; ▲ to position the selection bar on VIA (STREET) and confirm the selection by pressing knob (1).
The input menu appears to allow you to enter the required street name. The first letters are entered according to the degree of uniqueness of the street name, as follows:
Use keys ◀; ▶; ▼; ▲ to select the relevant street letter (the base of the letter is highlighted). The selected letter appears twice normal size at the top right of the display.

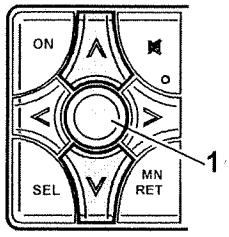

P3U15NL01

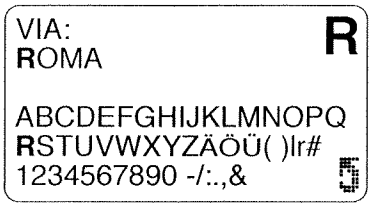

P3U15NL02

Press knob (1) to delete the inut row and the first street in the memorised list whose name coincides with the letter entered is displayed.
The letters entered automatically form the name of the street most closely corresponding to the required name.
To delete an entry, select the sign ⇧ and press knob (1).
Press key ♪ for the next letter in the street to be accepted directly by the input row, without having to go through the letter field.

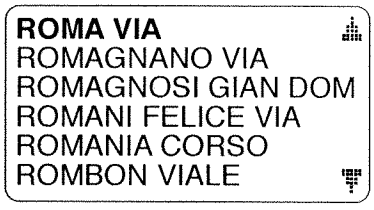

P3U15NL03

To confirm a data entry press knob (1) for more than 2 seconds; entry is confirmed by an acoustic signal and the display shows a list of streets.
If the street required is not the first in the list, scroll the list in one of two ways:
1. use keys ▼; ▲; to position the selection bar on the name of the street required and press knob (1);
2. while in the list of streets, use keys ▼; ▲; to highlight sign ⇩ to skip a page press knob (1); The sign ⇩ stays highlighted to allow another page to be skipped.

To go back to the previous page, highlight using keys ▼; ▲; the sign ⇧ and press knob (1).
With page down sign ⇩ highlighted press key ▼; to select the first name of a street present on the next page; when the page up sign is highlighted (press key ▲) the last name of a street present on the previous page is highlighted.

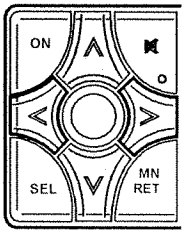

P3U15NL04

Copyright Fiat Auto

After selecting the street you want to go to, the following submenus appear on the screen:
- PERCORSO CELERE (FAST ROUTE)
- PERCORSO BREVE (SHORT ROUTE) (currently not available);
- PROPRIA SCELTA (OWN CHOICE) (currently not available);
- INCROCIO (CROSSROADS);
- MEMORIZZA DESTINAZ (STORE DESTINATION).

Use keys ▼; ▲ to move to the INCROCIO (CROSSROADS) submenu, press knob (1) to select this function.



P3U16NL01

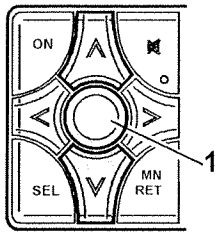

P3U15NL01

Crossroads

In order to determine the destination more accurately, a list of all roads that cross the street entered in the microprocessor memory is displayed under the INCROCIO (CROSSROADS) memory item.
Use keys ▼; ▲ to position the selection bar on the required crossroads and press the knob.
The display shows a list of roads that cross the road entered in the microprocessor; select the required road and press knob (1) to confirm the selection and go back to the route menu.

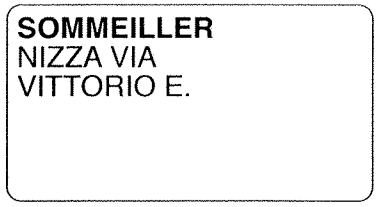

P3U16NL03

Centre

Under the CENTRO (CENTRE) menu item, choose directly between various town or city areas stored in the microprocessor memory.



P3U16NL04

Memorising a destination

After entering a destination, MEMORIZZA DESTINAZ (STORE DESTINATION) memory item cna be used to store the current destination in the microprocessory memory
Select the MEMORIZZA DESTINAZ (STORE DESTINATION) memory



P3U17NL01

Two submenus appear:
SOLO MEMORIZZA (STORE ONLY);
The destination entered in the microprocessor memory is stored in the destination memory with the destination address.
MEM. NOME BREVE (STORE ABBREV. NAME)
The entered destination is stored in the destination memory under an abbreviated name chosen by the user. The PERCORSO (ROUTE) menu reappears after storage.

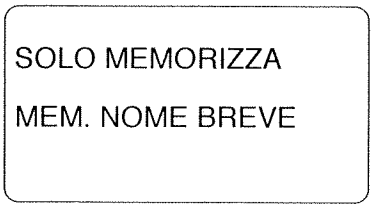

P3U17NL02

Fast route

The procedure for finding the fastest route to the required destination is set under way. Once the route has been processed, the guide procedure is automatically started.



P3U17NL03



P3U17NL04

Short route - Own choice

This function will soon be available on CD-Roms for each individual country.

Calculating a route

After activating the guide procedure, the radio navigation system begins to compute a route; the process may take up to 30 seconds. In the meantime, an arrow indicates the direction to the destination and the message CALC. ROUTE together with the voice message " L'ITINERARIO VIENE CALCOLATO (ROUTE BEING CALCULATED) ". The distance as the crow flies is shown.



P3U17NL05

55.

If the car is driving along a road stored on the CD-Rom, once the route has been calculated, the radio navigation system begins to issue instructions by voice and pictogram.
If the car is driving along a road not stored on the CD-Rom (car parks, garages etc.), the message OFF ROAD is displayed.



P3U18NL01

If the car is off the network on the CD-Rom, the message OFF MAP is displayed.
In such cases, simply drive in the arrowed direction toward your destination until the car is back on a road in the CD-Rom memory.



P3U18NL02

Driving recommendations

Voice and pictogram instructions are give well in advance so you always have time to manoeuvre without breaking the highway code.

If a driving recommendation given by the radio navigation system conflicts with highway code in force, always follow the highway code.

Arrow (1) indicates the direction to be followed. The lower row indicates road name (2) where the car is located. The distance displayed on the right (3), beside direction arrow (1) indicates the road to be taken before turning off or changing direction.
The full distance to be travelled is shown at the top right of the display (4).
According to car speed, operations preceding a turn-off are divided into three parts, each accompanied by a spoken message and an indication on the display (e.g. turn right before long; turn right in 100 metres; now turn right).

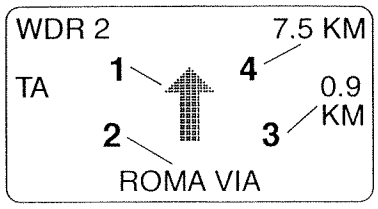

P3U18NL03

Immediately before the turn-off, the arrow indicates the direction in which you must turn. The top row of the display (1) also shows the name of the road you should turn into. A bar column (2) on the display guides you exactly to the turn-off. The car user also receives a voice message.

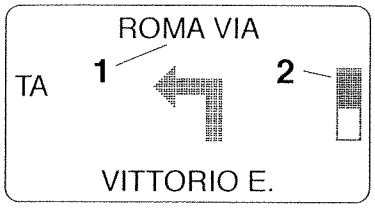

P3U19NL01

If you change route and do not follow the route calculated by the radio navigation system, the radio navigation system calculates a new route that takes the car's current position into account.
The display shows a new message (NEW ROUTE) and a colourless direction arrow is shown inside. This takes place immediately on a motorway and on normal roads after two requests to turn round (the display shows the message: SE POSSIBILE INVERTIRE LA MARCIA (TURN ROUND IF POSSIBLE).

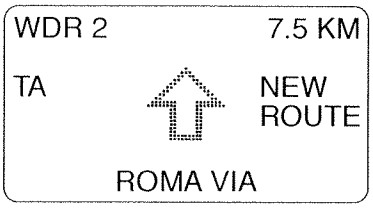

P3U19NL02



P3U19NL03

Traffic jam function

This function will shortly become available on CD-Rom for each individual country.

Breaking a journey or entering an intermediate route

This function will shortly become available on CD-Rom for each country.

Issuing vocal route instructions

Press knob (1) to hear a message indicating the current car postion; message volume can be adjusted by turning knob (1) clockwise or anticlockwise.
Give a short press to knob to zero the message currently being transmitted.
Press key for longer than 2 seconds to zero the message permanently. The wording "PARLATO DI GUIDA RACCOMANDA AMMUTOLITO (SPOKEN GUIDE MUTE)"
To reactivate voice messages, press knob (1).

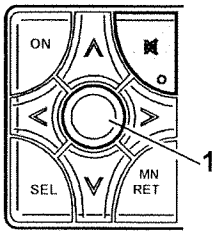

P3U19NL04



P3U19NL05

Navigation info menu

Press key 3 to issue a vocal message and the display shows the estimated time of arrival and remaining distance to the destination
The display can show a route list, current car position, procedure used to calculate the route and the road the car is currently driving along.

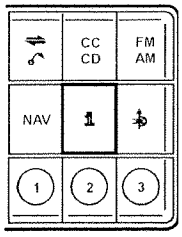

P3U11NL05



P3U20NL02

After 6 seconds, just as when key MN RET is pressed, the destination guide menu reappears.

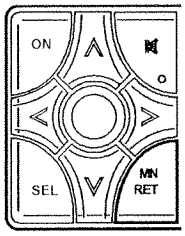

P3U47NL05

Route

Press knob (1) to create a route list and show on the display. If the route list is longer than one page, scroll through it using keys V; A.
When the street name is longer than the width of the display, select the street and press key 3.



P3U20NL04

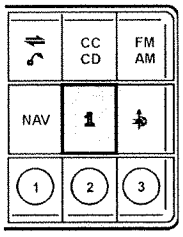

The display shows the distance to be completed on the current street and the full street name is shown.
Press key MN RET to redisplay a route list.
After 6 seconds, just as when key MN RET is pressed, the destination guide menu reappears on the display

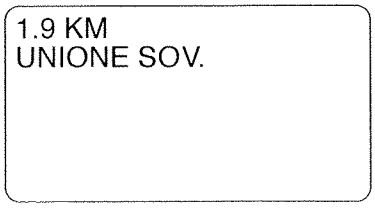

P3U20NL06

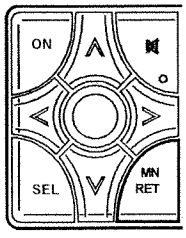

Position

Press keys ◄; ►; ▼; ▲; to position the selection bar on POSIZIONE (POSITION) and press the knob (1). The display shows the current street name, current position in latitude and longitude and the number of satellite signals currently being received by the radio navigation system.
After 6 seconds, just as if you had pressed key MN RET the system returns to the destination guide menu.

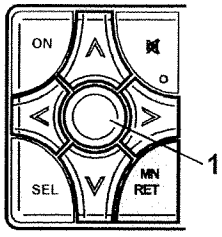

P3U21NL01

ARRIVO: 12 : 50 ORA
DISTANZA: 15 KM

PERCORSO **POSIZIONE**
MODO DESTINAZ.

P3U21NL02

TURATI FILIPPO

LUNG. : 9'53'36" E
LARGH. : 52'06'53" N
5 RICEZ. SATELLITI

P3U21NL03

Mode

Use keys ◄; ►; ▼; ▲; to position the selection bar on MODO (MODE) and press the knob (1). Information is displayed on the option selected for the route analysis procedure.
After 6 seconds, just as if you had pressed key MN RET the system returns to the destination guide menu.

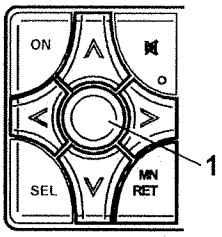

ARRIVO: 12 : 50 ORA
DISTANZA: 15 KM

PERCORSO POSIZIONE
MODO DESTINAZ.

P3U21NL05

PERCORSO CELERE

P3U21NL06

Destinations

Use keys ◄; ►; ▼; ▲; to position the selection bar on DESTINAZ. (DESTINATION). and press the knob (1). The display shows the current destination.
After 6 seconds, just as if you had pressed key MN RET the system returns to the destination guide menu.

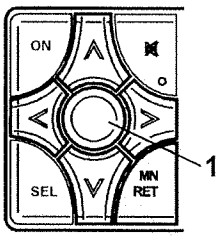

ARRIVO: 12 : 50 ORA
DISTANZA: 15 KM

PERCORSO POSIZIONE
MODO **DESTINAZ.**

P3U21NL08

TORINO
ROMA VIA
INCROCIO
CASTELLO VIA

P3U21NL09

Copyright Fiat Auto

DESTINATION MEMORY

The destinations saved in the microprocessor memory may be read or selected. Use keys ▼; ▲ to position the selection bar on the MEMORIA DESTINAZ (DESTINATION MEMORY) option and press the knob (1) to activate.

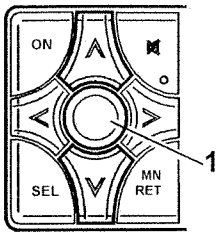

P3U15NL01

INPUT INDIRIZZO
MEMORIA DESTINAZ.
DESTINAZ. SPECIALI
ULTIMA DESTINAZ.
GUIDA TURISTICA
IMPOSTAZIONE/SET

P3U22NL02

six menu options appear on the display:

List destinations in order

Destinations are displayed in an preset order decided by the customer.
Highlight the required destination using the selection bar and confirm using knob (1). The route menu appears and the destination guide can be started.

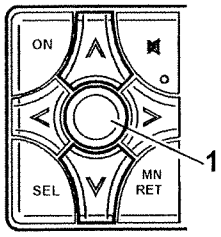

LISTA DEST. ORDIN.
LISTA DEST. ALFAB.
RIORDINATA
MEM. DEST. ATTUALE
MEM. POS. ATTUALE
DESTINAZ. ANNULLARE

P3U22NL04

DESTINAZ.
TORINO, ROMA VIA
VOLVERA, GERBOLE D
VOLVERA, NONE
TORINO,TRAIANO CORS
TORINO, SETTEMBR

P3U22NL05

Alphabetical destination list

Destinations are stored in alphabetical order. Highlight the required destination using the selection bar and confirm using knob (1). The route menu appears and the destination guide can be started.

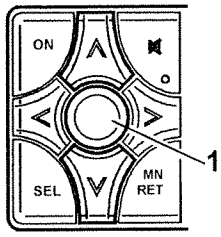

LISTA DEST. ORDIN.
LISTA DEST. ALFAB.
RIORDINATA
MEM. DEST. ATTUALE
MEM. POS. ATTUALE
DESTINAZ. ANNULLARE

P3U22NL07

DESTINAZ.
AEROPORTO DI CUNEO
RIVALTA DI TORINO
TORINO, ROMA VIA
TORINO, SETTEMBRINI
TORINO, TRAIANO CO

P3U22NL08

Re-order

Use this menu to reorder stored destinations manually. Use keys ▼; ▲ to position the selection bar on the required option and confirm using knob (1); again use keys ▼; ▲ to position the selection bar on the required position and confirm the new position using knob (1); the new position will be saved and a new basic memory menu will appear.
Press key MN RET to go back to the basic memory menu without saving your changes.

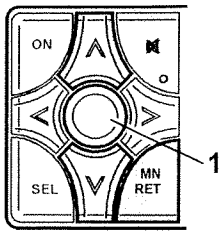

P3U23NL01

LISTA DEST. ORDIN.
LISTA DEST. ALFAB.
RIORDINATA
MEM. DEST. ATTUALE
MEM. POS. ATTUALE
DESTINAZ. ANNULLARE

P3U23NL02

DESTINAZ.
TORINO, ROMA VIA
VOLVERA, GERBOLE
VOLVERA, NONE
TORINO,TRAIANO CORS
TORINO, SETTEMBR

P3U23NL03

to reorder further entries, simply repeat the same procedure.

Current destination memory

Use this menu to save the current destination, for which the route has been calculated. Select MEM. DEST. ATTUALE (SAVE CURRENT DESTINATION) to display two submenus:

SOLO MEMORIZZA (STORE ONLY)

The destination is stored in the destination memory in the location DESTINAZIONE (DESTINATION).

MEM. NOME BREVE (STORE ABBREV. NAME)

The current destination is stored in the destination memory under an abbreviated name chosen by the car user.

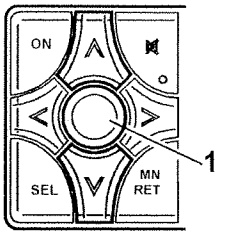

LISTA DEST. ORDIN.
LISTA DEST. ALFAB.
RIORDINATA
MEM. DEST. ATTUALE
MEM. POS. ATTUALE
DESTINAZ. ANNULLARE

P3U23NL05

SOLO MEMORIZZA

MEM. NOME BREVE

P3U23NL06

Store current position

This item can be used to store the car's current position and enter it in the destination memory under a name chosen by the car user.

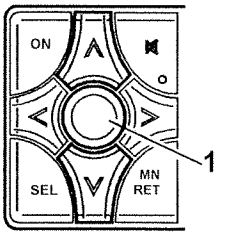

P3U15NL01

LISTA DEST. ORDIN.
LISTA DEST. ALFAB.
RIORDINATA
MEM. DEST. ATTUALE
MEM. POS. ATTUALE
DESTINAZ. ANNULLARE

P3U23NL08

Cancelling a destination

Use this menu to delete stored destinations from the microprocessory memory. Select DESTINAZ. ANNULLARE (CANCEL A DESTINATION) to display a list of stored destinations.
Use keys ▼; ▲ to select a destination to be deleted and confirm by pressing knob (1). To delete several destinations, simply repeat the same procedure.

Copyright Fiat Auto

Press key MN RET; to return to the basic memory memnu (DESTINAZ. ANNULLARE (CANCEL A DESTINATION)).

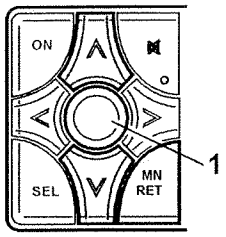

P3U23NL01

LISTA DEST. ORDIN.
LISTA DEST. ALFAB.
RIORDINATA
MEM. DEST. ATTUALE
MEM. POS. ATTUALE
DESTINAZ. ANNULLARE

P3U24NL02

SPECIAL DESTINATIONS

Use this menu to select specific destinations such as: SERVIZIO AUTOSTRADE (MOTORWAY SERVICES), AEROPORTO (AIRPORT), PARCHEGGIO/AUTOSILO (CAR PARK/CAR STORE) OR STAZIONE DI SERVIZIO (SERVICE STATION).

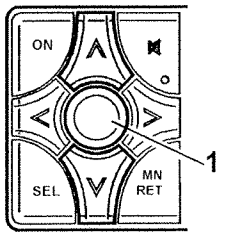

P3U15NL01

INPUT INDIRIZZO
MEMORIA DESTINAZ.
DESTINAZ. SPECIALI
ULTIMA DESTINAZ.
GUIDA TURISTICA
IMPOSTAZIONE/SET

P3U24NL04

After selecting DESTINAZIONI SPECIALI (SPECIAL DESTINATIONS) from the basic navigation system sub-menu, four menu options appear:

Dintorni attuali (Current surroundings)

Select the menu using the bar and confirm using knob (1). The display will show special destinations in the vicinity of the car's current position.

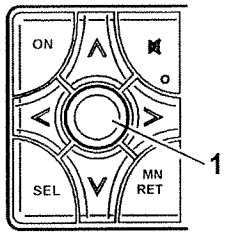

P3U03NL02

DESTINAZ. SPECIALI:

DINTORNI ATTUALI
PROSSIMITA' DEST.
LUOGO
DEST. EXTRAREG.

P3U24NL06

USCITA AUTOSTRADA
SERVIZIO AUTOSTRADA
AUTONOLEGGIO
STAZIONE FERR.
AEROPORTO
PASSAGGIO FRONTE

P3U24NL07

Prossimita dest. (distance to destination).

The radio navigation system display indicates special desitnations in an area chosen by the user.

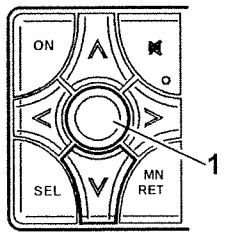

P3U24NL08

DESTINAZ. SPECIALI:

DINTORNI ATTUALI
PROSSIMITA' DEST.
LUOGO
DEST. EXTRAREG.

P3U24NL09

Luogo (Place)

Select the menu using the bar and confirm with knob (1) to indicate special destinations located in the vicinity of a place that the radio navigation system user selects. Enter the place using the same procedure used to enter CITTÀ (TOWN OR CITY)/CENTRO (CENTRE).

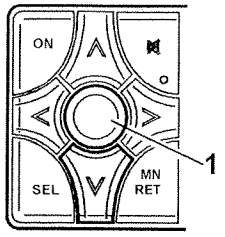

P3U24NL08

DESTINAZ. SPECIALI:

DINTORNI ATTUALI
PROSSIMITA' DEST.
LUOGO
DEST. EXTRAREG.

P3U25NL02

CITTA'/LOCALITA': R
TORINO

ABCDEFGHIJKLMNOPQ
RSTUVWXYZÄÖÜ( )Ir#
1234567890 -/:.,&

P3U25NL03

Destinazione extra (Out of region destination)

Select this menu to choose destinations outside the town or city, namely USCITA AUTOSTRADA (MOTORWAY EXIT), INCROCIO AUTOSTRADA (MOTORWAY MERGE), SERVIZIO AUTOSTRADA (MOTORWAY SERVICE), AEROPORTO (AIRPORT) OR PASSAGGIO FRONTIERA (BORDER CROSSING); you can choose either international or regional airports.

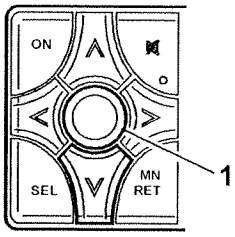

P3U25NL04

DESTINAZ. SPECIALI:

DINTORNI ATTUALI
PROSSIMITA' DEST.
LUOGO
DEST. EXTRAREG.

P3U25NL05

ULTIMA DESTINAZIONE (LAST DESTINATION)

Select this menu to use the last destination entered in the memory as a guide. This menu appears only if a destination has been entered in the memory previously.

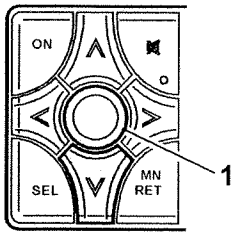

INPUT INDIRIZZO
MEMORIA DESTINAZ.
DESTINAZ. SPECIALI
ULTIMA DESTINAZ.
GUIDA TURISTICA
IMPOSTAZIONE/SET

P3U25NL07

Travel guide

This type of meny appears only when CD-Rom travel guides are used (e.g. Merian Scout); the various CD-Rom travel guides offer several submenus with various items of information, e.g.: location selection; golf courses; overnight stays; Amusements; Restaurants; Bars etc.

Copyright Fiat Auto

55.

IMPOSTAZIONE/SET (SETTING)

Select this menu to alter the following radio navigation system settings: LINGUA/LANGUAGE, POSITION ATTUALE (CURRENT POSITION), TEMPO (TIME), CONTRASTO DISPLAY (DISPLAY CONTRAST), CALIBRATURA (CALIBRATION).

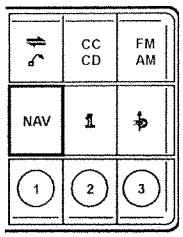

P3U13NL01

INPUT INDIRIZZO
MEMORIA DESTINAZ.
DESTINAZ. SPECIALI
ULTIMA DESTINAZ.
GUIDA TURISTICA
IMPOSTAZIONE/SET

P3U26NL02

Language

Select this menu to alter the language used on the display and for voice information. The new language takes about 30 seconds to load.

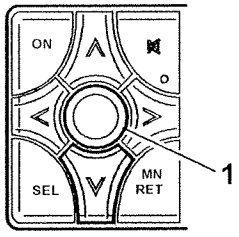

P3U25NL04

LINGUA/LANGUAGE
POS. ATTUALE
TEMPO
CONTRASTO DISPLAY
CALIBRATURA

P3U26NL04

DEUTSCH
ENGLISH (METRIC)
ENGLISH (IMPERIAL)
FRANCAIS
ITALIANO
NEDERLANDS

P3U26NL05

Current position

Use this menu only in EXCEPTIONAL circumstances, when the radio navigation system is not able to position the car automatically with the aid of the G.P.S.

NOTE *Always (or whenever possible) enter the current position when you are near a crossroads. If the selected point is not suitable as a reference point for POSITION ATTUALE (CURRENT POSITION), the display shows the message "INDIRIZZO SCELTO PER INPUT POS. ATTUALE NOT ADATTO (ADDRESS NOT SUITABLE)"*

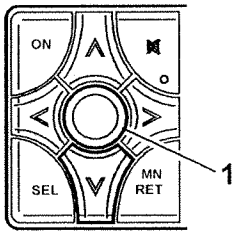

LINGUA/LANGUAGE
POS. ATTUALE
TEMPO
CONTRASTO DISPLAY
CALIBRATURA

P3U26NL07

Select the POS. ATTUALE (CURRENT POSITION) menu to display three submenus: DIRETTAMENTE (DIRECTLY); DA MEMORIA DEST. (FROM DESTINATION MEMORY); DESTINAZ. ATTUALE (CURRENT DESTINATION).

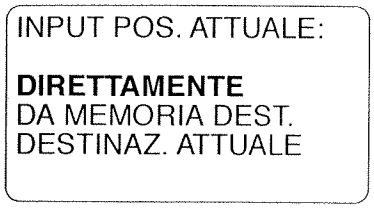

P3U27NL01

DIRETTAMENTE (DIRECTLY)

Press knob (1) to select the DIRETTAMENTE (DIRECTLY) menu. Two situations may arise:

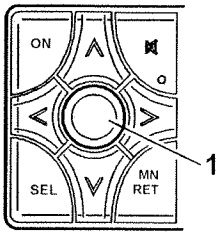

P3U03NL02

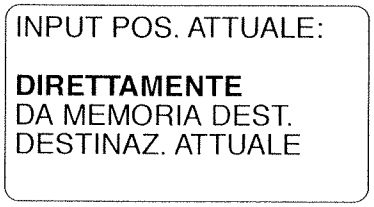

P3U27NL03

Example 1.

- The crossroads between Via Gorizia and Via Barletta in Turin is 50 metres ahead of the car;
- as when enering an address, enter the città/località (town/city), via (street)/incrocio (crossroads);
- enter the car's distance (current position) from the crossroads: 50 metres. To enter the distance, press key ▲, remembering the number must be a multiple of 10 metres.
- after setting the distance, the display indicates "INCROCIO: VIA GORIZIA/VIA BARLETTA CIRCA 50 METRI IN AVANTI (CROSSROADS BETWEEN VIA GORIZIA AND VIA BARLETTA ABOUT 50 METRES AHEAD)"
- to save curent car position, simply press knob (1) and the display shows "VIENE ACCETTATA LA POSIZIONE ATTUALE SCELTA (CURRENT POSITION ENTRY ACCEPTED)".

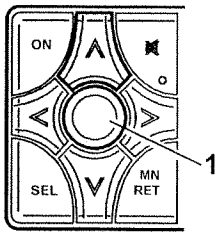

P3U27NL04

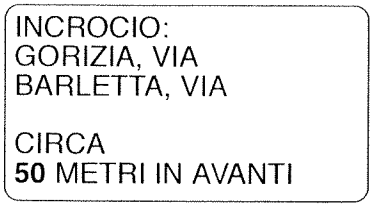

P3U27NL05

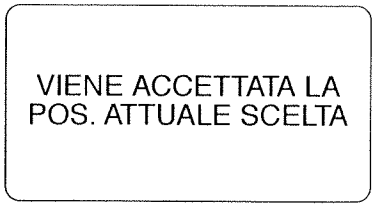

P3U27NL06

Example 2.

- The crossroads between Via Gorizia and Via Barlette in Turin is about 50 metres behind the car;
- as when entering an address, enter the città/località (town/city)/incrocio (crossroads);
- enter the car's distance (current position) from the crossroads: e.g. 50 metres. To enter the distance, press key ▼, remembering the number must bé a multiple of 10 metres;
- after setting the distance, the display shows "INCROCIO: VIA GORIZIA/VIA BARLETTA CIRCA 50 METRI DIETRO "CROSSROADS: VIA GORIZIA/VIA BARLETTA ABOUT 50 METRES BEHIND)".
- to save current car position, simply press knob (1). The display shows: "VIENE ACCETTATA LA POSIZIONE ATTUALE SCELTA (CURRENT POSITION ENTRY ACCEPTED)".

Copyright Fiat Auto

55.

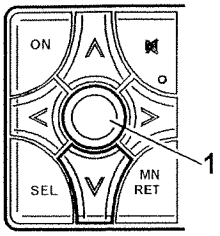

P3U24NL08

INCROCIO:
GORIZIA, VIA
BARLETTA, VIA

CIRCA
50 METRI DIETRO

P3U28NL02

VIENE ACCETTATA LA
POS. ATTUALE SCELTA

P3U28NL03

DA MEMORIA DEST. (FROM DESTINATION MEMORY).

Select the "DA MEMORIA DEST. (FROM DESTINATION MEMORY)" to call up the destination memory; if one of the saved destinations corresponds to the car's current position, select the destination from the memory using keys ▼; ▲.
Press knob (1) to save current car position.

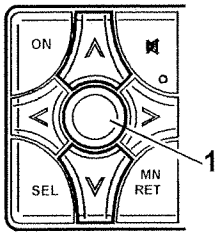

P3U15NL01

INPUT POS. ATTUALE:

DIRETTAMENTE
DA MEMORIA DEST.
DESTINAZ. ATTUALE

P3U28NL05

DESTINAZ.
TORINO, ROMA VIA
VOLVERA, GERBOLE
VOLVERA, NONE
TORINO,TRAIANO CORS
TORINO, SETTEMBR

P3U28NL06

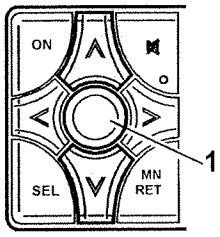

VIENE ACCETTATA LA
POS. ATTUALE SCELTA

P3U28NL08

DESTINAZIONE ATTUALE (CURRENT DESTINATION)

If the last destination entered corresponds to current car position, use keys ▼; ▲ to position the selection bar on DESTINAZ. ATTUALE (CURRENT DESTINATION); press knob (1) to save the destination as the car's position.

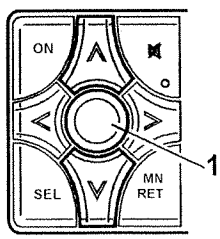

INPUT POS. ATTUALE:

DIRETTAMENTE
DA MEMORIA DEST.
DESTINAZ. ATTUALE

P3U28NL10

Tempo (Time)

Select the TEMPO (TIME) menu to display the system clock and set the correct time; use keys ▼; ▲; to position the selection bar on TEMPO (TIME) and press the knob (1) to confirm.

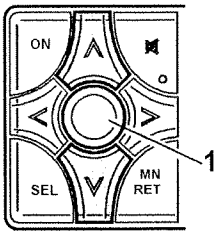

P3U15NL01



P3U29NL02

Use keys ▼; ▲ to switch between a 24 hour or 12 hour display. Active function status appears on the display in reverse.

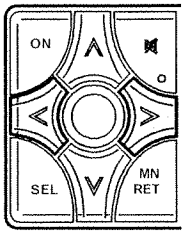

P3U29NL03



P3U29NL04

Press knob (1) to display the exact time and date. Both exact time and date are set automatically via G.P.S. The G.P.S. system runs on standard UTC time (Universal Time Coordinates).

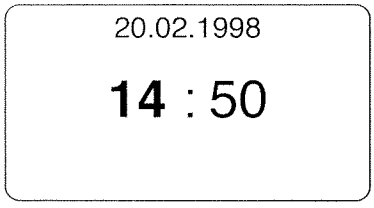

P3U29NL05

Compared to average central european time (ACET), the time difference is 1 hour during Daylight Saving Time and 2 hours during Summertime. The user must enter the correction manually.
To correct the time difference, call up the time and use keys ▼; ▲; to set the correct time. Once you have corrected the time, press knob (1) for more than 2 seconds.



If the power to the radio navigation system is turned off, the time must be reset.

Copyright Fiat Auto

55.

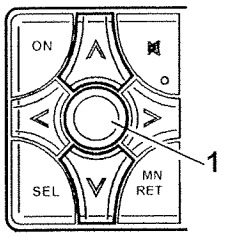

P3U15NL01

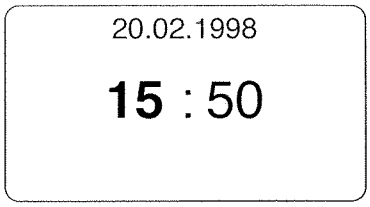

P3U30NL02

Contrasto display (Display contrast)

To make the display easier to read, the contrast may be adjusted to adapt to environmental conditions or personal taste.
The constrast is represented on the display by numerical values from -15 to + 16. The value "0" indicates contrast is average.
Call up the function and then turn knob (1) clockwise or anticlockwise to alter the contrast within a period of 6 seconds. If this is not carried out in time, the function is cancelled and and the system returns to the previous screen.
Use keys ▼; ▲; to position the selection bar on CONTRASTO DISPLAY (DISPLAY CONTRAST) and confirm your selection by press knob (1); the display shows the message CONTRASTO (CONTRAST).

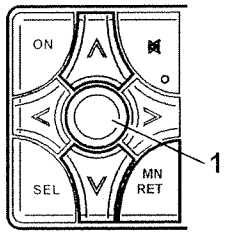

P3U23NL01



P3U30NL04

Turn the knob clockwise to increase contrast and anticlockwise to decrease contrast.
After setting contrast, go back to the system menu by pressing key MN RET or wait 6 seconds after setting the values.

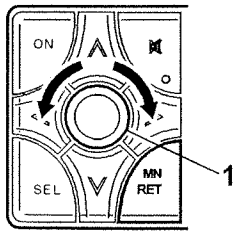

P3U30NL05

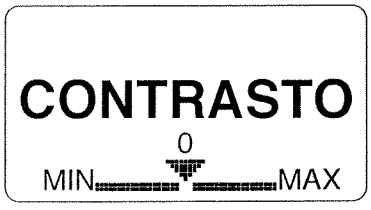

P3U30NL06

Calibration (tyre size)

After a tyre change, the radio navigation device must be calibrated; call up the CALIBRATURA (CALIBRATION) option from the basic menu using keys ▼; ▲.
Once you have called up the CALIBRATURA (CALIBRATION) menu, a warning will be displayed, which allows you to stop the operation; to carry out calibration, move the selection bar to AVVIO (PROCEED) and confirm by pressing knob (1).

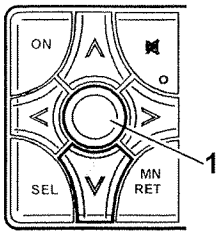

P3U24NL08

LINGUA/LANGUAGE
POS. ATTUALE
TEMPO
CONTRASTO DISPLAY
CALIBRATURA

P3U31NL02

The submenu SCEGLIERE PNEUMAT (SELECT TYRES) can be used to select between PNEUMATICO NUOVO (NEW TYRE) and PNEUMATICO USATO (USED TYRE).
Highlight the type of tyre fitted using the selection bar and confirm your choice by pressing knob (1).

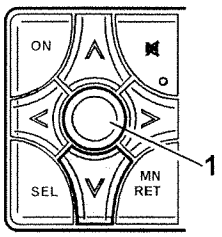

CALIBRATURA CAMBIA
PARAMETRI IMPORT. !
ISTRUZIONI USO

INTERROMPERE
AVVIO

P3U31NL04

Use keys ◄; ► to enter each individual tyre size figure and confirm by pressing knob (1); repeat the operation until the tyre type is fully entered.
To delete a figure entered incorrectly, position the marker on the symbol 5 and press the knob (1).

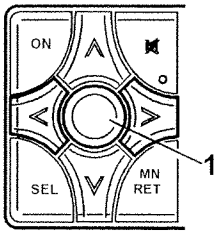

P3U31NL05

TIPO PNEUMATICO: **5**

195/__R__

0123456789 5

P3U31NL06

If all figures have been correctly entered, press the knob for more than 2 seconds to accept the selected tyre.
Once the tyre has been accepted, go back to the previous screen and confirm your choice by selecting OK and confirm again by pressing knob (1); the tyre is stored and the radio navigation system is started up again.

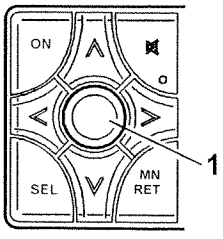

P3U03NL02

SCEGLIERE PNEUMAT. :

PNEUMATICO NUOVO
PNEUMATICO USATO

OK INTERROMP.

P3U31NL08

Use INTERROMP (INTERRUPT) to exit the calibration menu. The navigation system will then start up again without the changes being saved.

Copyright Fiat Auto

55.

Changing navigation CD-rom

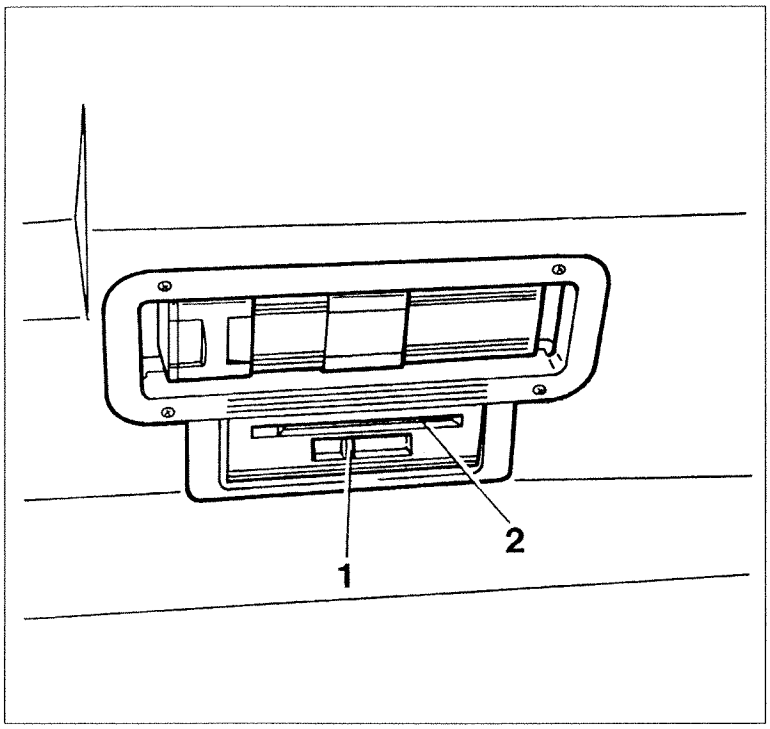

P3U32NL01

The navigation system can only work if a navigation CD-Rom is fitted to be used by the computer.

To ensure efficient system operation, it is advisable to use an up-to-date CD-ROM.

Remove a CD-ROM as follows:
- turn the radio navigation system power on;
- move CD-ROM lock lever (1) to the left.
- the disc is ejected and can be removed (2).

While the CD-ROM is being ejected, never move the lock lever to the right.

- Carefully insert the new CD-Rom in its slot. Position correctly so that the disc is pushed inside automatically;

- once the CD is fully inserted, push the lock lever to the right. Now the system is ready for use.

RADIO FUNCTION

Setting radio mode

Press key FM AM to set the radio function. This is tuned to the last station broadcasting before the system was turned off or changed to another function. The basic radio menu appears on the display.

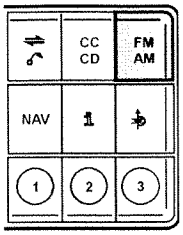

P3U33NL01



P3U33NL02

Setting the radio wavelength

To choose between FM; MW; LW wavelengths, repeatedly press key FM AM until the display shows the required wavelength. The radio sets itself to the last radio station broadcast.

FM - frequency modulation 87.5-108.0 MHz;
MW (OM) - medium wave 531-1602 kHz;
LW (OL) - long wave 153-279 kHz.

The 3 figures below show screens displayed for the different wavelengths.



P3U33NL03



P3U33NL04



P3U33NL05

FM BROADCASTS

Radio Data System (R.D.S.)

The presence of 2 FM receivers and a Radio Data System (R.D.S.) ensures good quality reception; the R.D.S. system can be used to identify the broadcasting station, even if it is a regional station. The display shows the station code..
The PTY system (programme type detection) is able to select the type of programme you wish to listen to (news, sport etc.).
When tuned to an FM wavelength, the radio list shows stations that can be received. Some stations use R.D.S. to broadcast adverts, weather reports or rolling news programmes.
Stations that do not broacast in R.D.S. are listed at the end of the table and only radio frequencies are indicated.

Auto-Best

If a station frequency weakens during a broadcast, the radio searches alternative frequencies to find the best frequency for the current station.

Copyright Fiat Auto

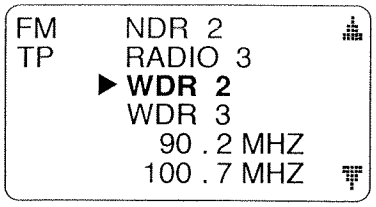

P3U34NL01

Selecting from the radio station list

The receiver automatically creates a list of stations currently received by the radio.
The list is continually updated during radio broadcasts.
Use key MN RET to position the selection bar on the TRASM (STATION) menu option and confirm by pressing knob (1); a list of stations appears.

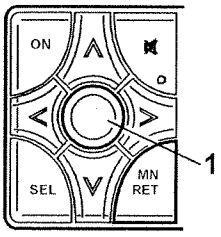

P3U34NL02



P3U34NL03

The arrow and selection bar highlight the set station; press keys ∧; ∨ to move the selection bar to the required station; press knob (1), to confirm your choice.

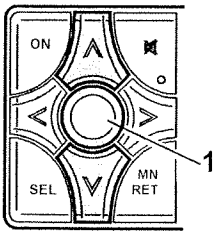

P3U15NL01

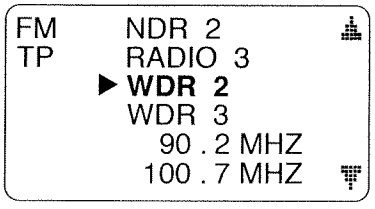

P3U34NL05

Consulting the list of stations

The station list may include several pages. These may be scrolled in two ways:
1. With page down sign ▼ highlighted press knob (1) to move to the next page; the page skip sign ▲ remains highlighted so that the next page can be accessed by pressing knob (1). When you reach the last page, the page up sign is autoamtically highlighted ▼ to allow you to display previous pages.

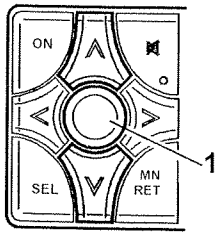

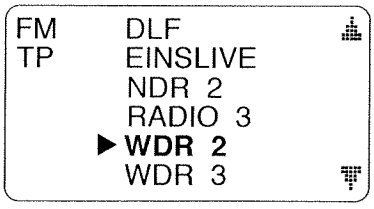

P3U34NL07

2. With page down sign highlighted, press key ▼ to highlight the first station on the next page; with page up sign highlighted, press key ▲ to highlight the last station on the previous page.

After 6 seconds, just as if you had pressed key MN RET the system returns to the basic menu.

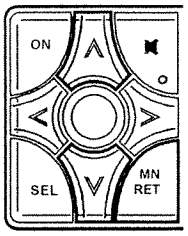

P3U35NL01

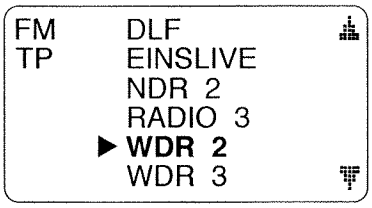

P3U35NL02

Automatic station search

Use keys ◀ or ▶ to move around within the list of radio stations.

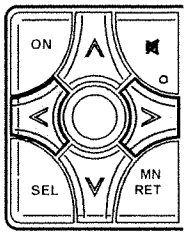

P3U29NL03

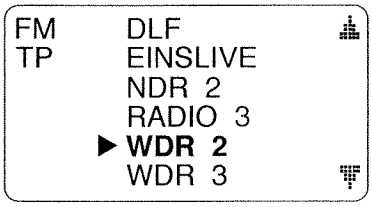

P3U35NL04

Manual station search

Press one of the keys ◀ or ▶ for more than 2 seconds and an acoustic signal sounds to indicate that the radio is not producing any sound. The station search continues as long as one of the two keys ◀, ▶ is pressed.
The station search is ended by releasing key ◀ or ▶ and when reception of one of the stations is reasonably good.
After releasing the keys ◀ or ▶ the radio stays in "manual station search" mode for 2 seconds so that when key ◀ or ▶ is pressed, the required frequency is obtained. The selected frequency is shown on the display.

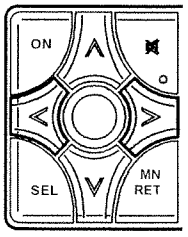

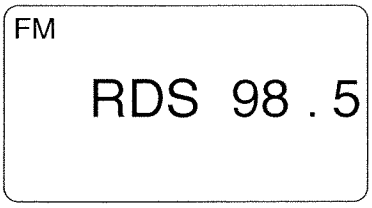

P3U35NL06

SCAN function (FM)

Press key ▲ for more than 2 seconds, when you will hear an acoustic signal. Then all the stations in the list can be heard for about 6 seconds each, one after another. The message SCAN appears at the top of the display.
Press key ▲ again or a station search key to interrupt the SCAN function and tune to the last station briefly broadcast.

Copyright Fiat Auto

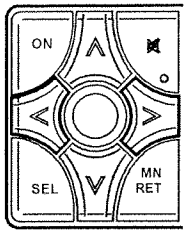

P3U15NL04

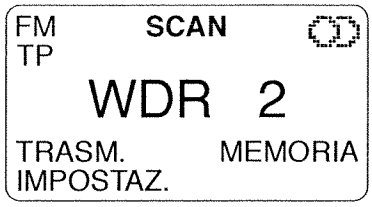

P3U36NL02

Store menu

Up to 10 stations can be stored for each wavelength. When RDS is active, the code of the station tuned in is displayed. When RDS is deactivated, or if the station does not broacast RDS data, the frequency shown on the display is stored.

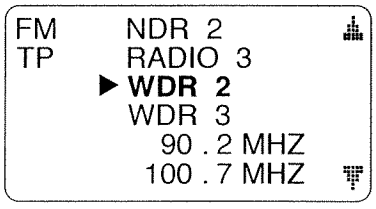

P3U36NL03

Storing stations

Stations may be stored in 2 ways:

1. While in the main menu, press key MN RET to select option MEMORIA (MEMORY) and press the knob (1) to confirm; the memory menu is then displayed.

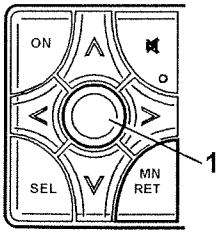

P3U34NL02



P3U36NL05

Press key ∧/∨ to move the selection bar to a free memory position and press the knob (1) for longer than 2 seconds. The system emits an acoustic signal and stores the current station in the selected position. If the selection bar is on a memory position already occupied by another station, this is deleted and its place is taken by the current station.

Each station may be stored in only one position in the list. To move a stored station to a different position, simply press one of the keys ∧/∨ to select the station and then tag using knob (1). Press one of the keys ∧/∨ to move the selection bar to the required memory position and press knob (1) for longer than 2 seconds. The system emits an acoustic signal and the station is moved to the chosen memory position.

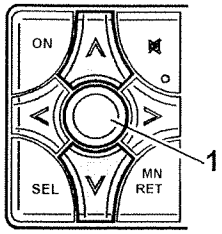

P3U15NL01

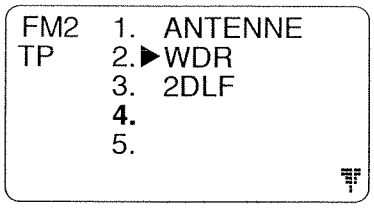

P3U37NL02

2. The current station can be saved directly in the first, second or third memory position. To do this, press the key for the required memory position 1 ... 3 for longer than 2 seconds. The system emits an acoustic signal and stores the current station in the chosen position. Any station saved in this position previously is deleted. Each station can only be saved in one position in the list. If the current station was already stored in another position, this position is released.

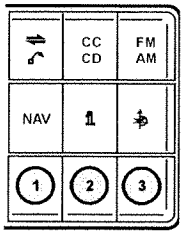

P3U37NL03

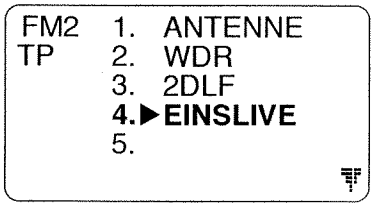

P3U37NL04

Calling up a stored station

A stored station may be called up in three ways.

1. While in the main menu, press key MN RET to select the option MEMORIA (MEMORY) and press the knob (1) to confirm. The memorisation menu appears; press key ∧/∨ to move the selection bar to a stored station and press the knob to confirm your selection. The system tunes to the selected station.

2. Briefly press key ∧/∨; this selects the station before or after the current station from the stored station list.

3. Press one of the keys 1 ... 3 to select the station stored in the relevant memory position.

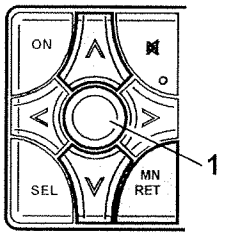

P3U23NL01

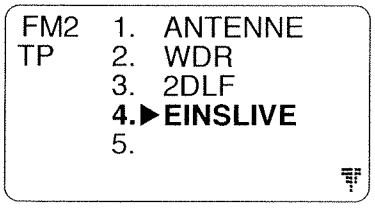

P3U37NL06

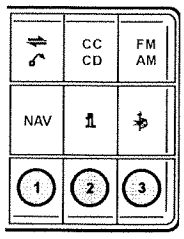

Copyright Fiat Auto

Setting FM

While in the main menu, press key MN RET to select the option IMPOSTAZ (SET). and press the knob (1) to confirm. The "IMPOSTAZIONE FM (SETTING FM)" menu appears.

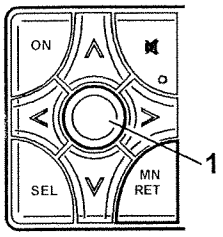

P3U34NL02



P3U38NL02

RDC function-ON/OFF

While in the menu "IMPOSTAZIONE FM (SETTING FM)" press one of the keys ▲/▼ to select the option RDS; press one of the keys ◀/▶ to activate (ON) / deactivate (OFF) the RDS function. The currently active status is highlighted in negative.
When the RDS function is active, all stations broadcasting in RDS are displayed in the station list with their codes, while the Auto Best function searches for alternative frequences available for each station. When the RDS function is not active, the display indicates only station frequencies and alternative frequencies are not searched for.

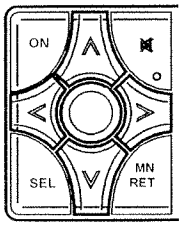

P3U38NL03



P3U38NL04



P3U38NL05

Regional broadcast function

Some stations broadcast regional programmes at certain times of day. When a regional programme is broadcast, the message RP appears on the display. If you wish to continue listening to the regional programme, you must active the relevant function. When the regional broadcast function is active, the message RP is highlighted in negative.



P3U38NL06

Regional broadcast ON/OFF

Press one of the keys ▲/▼ to select RP; press one of the keys ◀/▶ to activate or deactivate the RDS function. The active station is displayed in negative.
With the RP function active, the Auto Best function acts only at a regional programme level. If no alternative frequencies are available for a regional programme, the tuned station continues to broadcast even if reception quality is poor. If you wish to use the RDS function effectively, simply deactivate the regional station function.

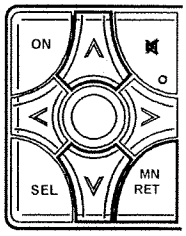

P3U35NL01





P3U39NL03

Programme type function (PTY)

The PTY funcitin is a RDS function service offered by radio stations. The PTY function can be used to select radio stations broadcasting a certain programme type in FM.

The following programme types are available:

NOTIZIE (NEWS)
POLITICA (POLITICS)
CONSIGLI (ADVICE)
SPORT
ISTRUZIONE (EDUCATION)
TEATRO (PLAYS)
CULTURA (CULTURE)
SCIENZA (SCIENCE)
PR. VARI (VARIOUS PROGRAMMES)
POP
ROCK
M. varia (various music)
M. corale (choral music)
M. CLASS. (CLASSICAL MUSIC)
MUSIC

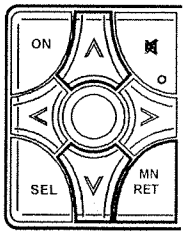



P3U39NL05



P3U39NL06

Selecting a programme type

Press one of the keys ▲/▼ to select the option TIPO PROGRAMMA (PROGRAME TYPE) and press the knob (1) to confirm; a list of available programmes is displayed.
Press one of the keys ▲/▼ to move the selection bar to the lower symbol ▼ or upper symbol. Press knob (1). The next or previous page in the list is displayed.

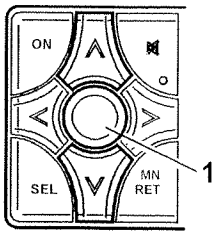

P3U39NL07



P3U39NL08

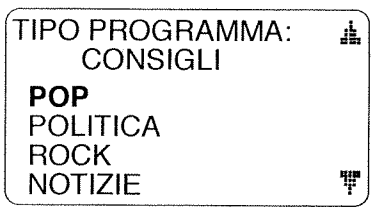

P3U39NL09

Copyright Fiat Auto

55.

Press one of the keys ∧/∨ to select the required programme type and press knob (1) to confirm. The system displays the selected programme type in negative on the first row of the display and the system tunes to the first station broadcasting programmes of this type.

Briefly press one of the keys ◁/▷; the radio tunes to the next station in the list of stations broadcasting the same programme type.

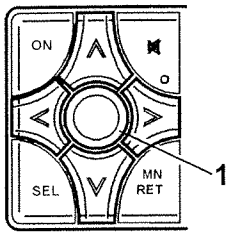

P3U40NL01

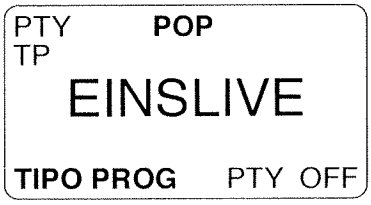

P3U40NL04

When a station begins to broadcast a programme of a different type from the selected type, the display message highlighting changes from negative to positive.
To change programme type, press knob (1) to call up the list of available programmes and select a new one.

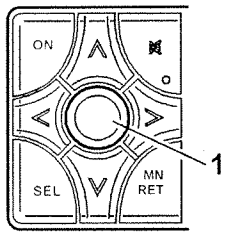

P3U03NL02

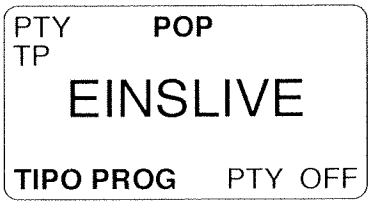

Deselecting a programme type

Press key MN RET to select the option PTY OFF and press the knob (1) to confirm; the system displays the main menu and the TIPO PROGRAMMA (PROGRAME TYPE) function is turned off. The radio broadcasts the last station tuned to.

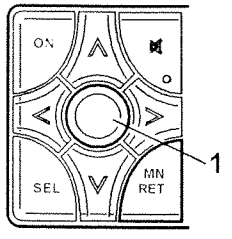

P3U34NL02

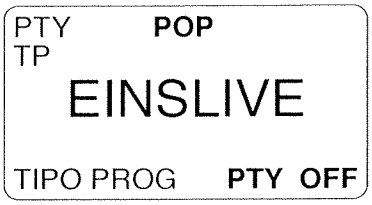

P3U40NL06

The TIPO PROGRAMMA (PROGRAME TYPE) function is turned off when a station is selected from the radio memory by pressing one of the keys 1...3. The system displays the main menu and the selected station is played.

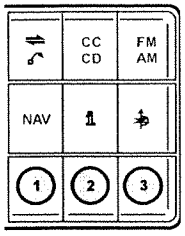

P3U37NL03

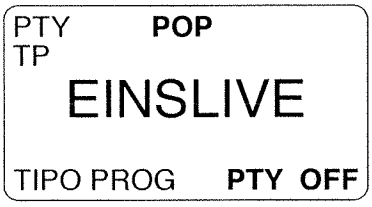

P3U41NL02

TP (Trafic Program)-Information on road traffic conditions

Press key FM AM for longer than 2 seconds to activate the traffic and road information service, which the radio receives at the same time as the radio programme. The system emits an acoustic signal to confirm selection.

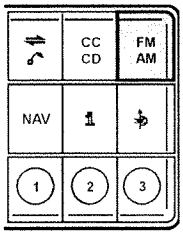

P3U33NL01

The traffic and road information service can also be turned on/off from the "IMPOSTAZIONE FM (SETTING FM)" menu. To do this, press key MN SET to select the option IMPOSTAZ (SET) from the main menu. and press the knob (1). Press one of the keys ∧/∨ to select the option TA. Press one of the keys ◁/▷ to activate/deactivate the traffic and road information service; The active status is indicated by a message highlighted in negative.

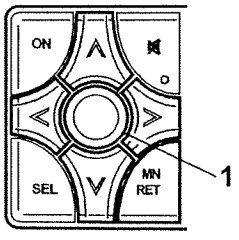

P3U41NL04



P3U41NL05



P3U41NL06

55.

When the traffic and road information service is activated, the message TA appears on the display. When the current station broadcasts news bulletins with this type of information, the message TP appears on the display.

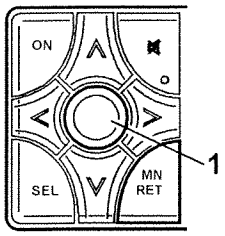

P3U34NL02



P3U42NL02

When the traffic and road information service is active, a station broadcasting this type of information is automatically selected. The following priorities are observed when making the selection.

1. When you are already tuned to a station that broadcasts traffic information, traffic information is automatically played in the background even when a cassette, CD or AM station is being played.
2. If you are tuned to a station that does not broadcast traffic information, you will hear another station within the same information network that broadcasts this type of information (for example NDR2, while you are tuned to NDR3).
3. If the station network does not include a station that broadcasts traffic information, the radio tunes to the most powerful station broadcasting this information.
4. If reception of the station broadcasting traffic information gets worse, the radio tunes to another station in accordance with the priorities described above.
5. When you tune to another station, the traffic information service is adapted in accordance with the priorities described above.
6. If the traffic information reception function is active but no station broadcasting this type of information is detected for 3 minutes, the message "TA" disappears from the display and the traffic information reception function is automatically turned off.

Traffic news broadcasts

During broadcast of road traffic news, the code TA is highlighted in negative on the display. To interrupt a traffic news broadcast, press key ◙ and the system will switch to another selected broadcast mode. The next news bulletin will still be transmitted.

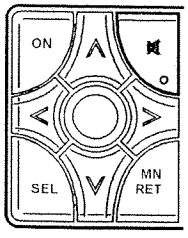

P3U42NL03



P3U42NL04

Mute/play

Press key to turn off the sound in any operating mode and the radio will set itself to receive traffic and road news even if the specific funcition is not enabled. The display indicates the code of the selected traffic news station. Mute is indicated by a red indicator light on key . The first available traffic news broadcast begins to play.

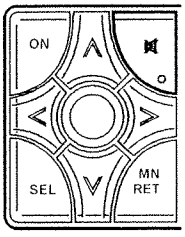

P3U42NL03

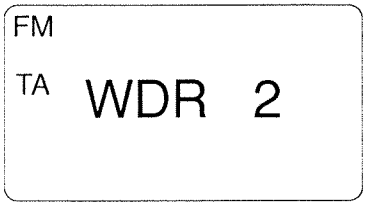

P3U43NL02

If no traffic news is being broadcast, you can turn off this function by pressing key for longer than 2 seconds. The message MUTO (MUTE) appears on the display.

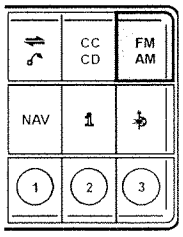

P3U33NL01



P3U43NL04

Alarm message (RDS PTY 31 service)

If an alarm is raised due to a catastrophic event, a station may broadcast important warnings via RDS. The display shows the message ALLARME (ALARM). In this case, all operating modes are interrupted for the duration of the alarm broadcast.

The alarm function is activated automatically even if the traffic information service is not currently active.



P3U43NL05

Copyright Fiat Auto

AM BROADCASTS

To set a given AM wavelength band, repeatedly press key FM/AM until the display shows the required wavelength. The display shows the menu for medium wave (MW) or long wave (LW).

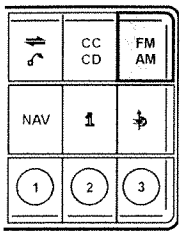

P3U33NL01

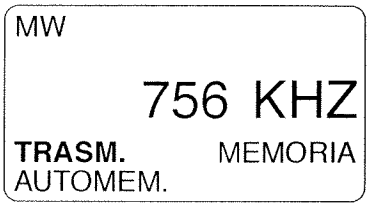

P3U44NL02

Automatic station search

Briefly press one of the keys ◀/▶; to select the first available station.

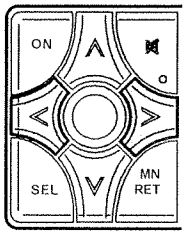

P3U29NL03



P3U44NL04

Manual station search

Press one of the keys ◀/▶ for longer than 2 seconds; the system emits an acoustic signal, the sound is turned off an d the frequencies are scanned. The scan continues as long as the key is pressed. When the key is released, the scan continues to the first frequency occupied by a station, even if the sound quality is not perfect. Once the key is released, the manual station search function continues for 2 seconds so that the scan can be resumed more quickly. The selected frequency appears on the display.

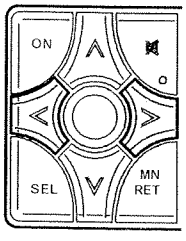



P3U44NL06

SCAN function (AM)

Press key ▲ for longer than 2 seconds; the system emits an acoustic signal and frequencies are scanned within the selected AM wavelength. The first scan is carried out at a low reception sensitivity. The second scan is carried out at a higher sensitivity.
As soon as a station with good reception is located, the broadcast is played for 8 seconds. To continue listening to this broadcast, press key ▲ once, or press one of the station search keys.

If no key is pressed, the scan is automatically resumed and the radio plays all available stations for 8 seconds each, one after another.

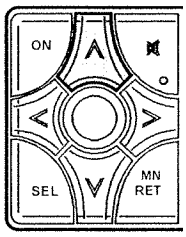

P3U45NL01

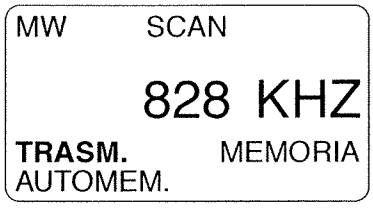

P3U45NL02

Store menu

Up to 10 stations can be stored for each of the two wavelengths (MW) and (LW).

Storing a station

Stations can be stored in two ways:
1. Press key MN RET to select the option MEMORIA (MEMORY) and press the knob to confirm.

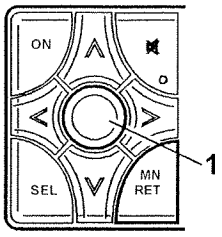

P3U34NL02



P3U45NL04

Press one of the keys ▲/▼ to select a free memory position and press knob (1) for longer than 2 seconds. When the selection bar is on an occupied memory position, the current station is deleted to make room for the new station.

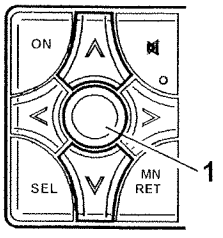

P3U39NL07

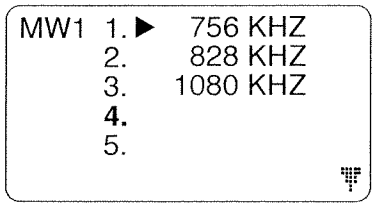

P3U45NL06

55.

Each station may be stored in only one position in the list. To move a stored station to another position in the list, press one of the keys ∧/∨ to select and then knob (1) to confirm. Press one of the keys ∧/∨ to move the selection bar to the memory position to which you wish to move the selected station and press the knob (1) for longer than 2 seconds. The system emits an acoustic signal and the selected station is moved to the selected memory position.

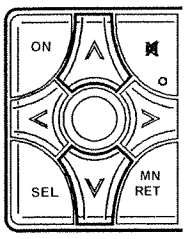

P3U46NL01

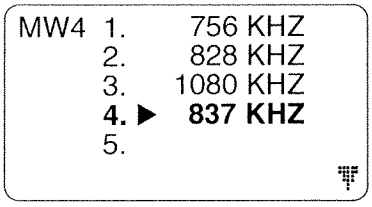

P3U46NL02

2. A currently tuned station can be stored directly in the first, second or third memory position. To do this, press the key for the required memory position 1...3 for longer than 2 seconds. The system emits an acoustic signal and stores the currently tuned station in the selected position, where it overwrites any other station stored previously.

   Each station may be stored in the list in only one position. If the currently tuned station was already stored in another position, this position now becomes available.

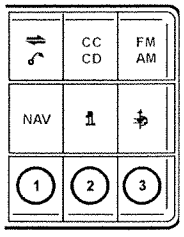

P3U37NL03

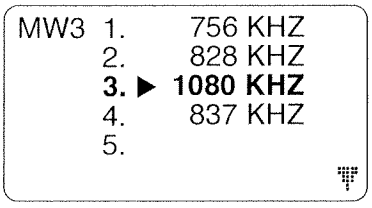

P3U46NL04

Calling up a stored station

A stored station may be called up in three ways.

1. While in the main menu, press key MN RET to select the option MEMORIA (MEMORY) and press the knob (1) to confirm; the memorisation menu is displayed. Press one of the keys ∧/∨ to select the required station and press knob (1) to confirm. The radio will begin to play the selected station.

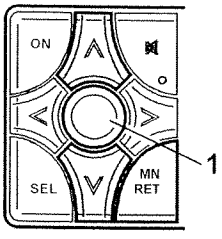

P3U23NL01

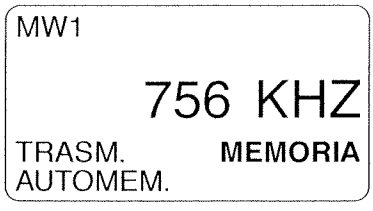

P3U46NL06

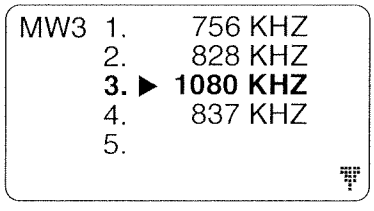

P3U46NL07

2. Briefly press one of the keys ∧/∨. The next/previous station in the list will be selected.

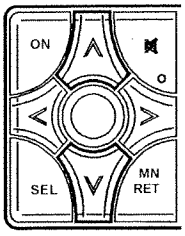

P3U46NL01

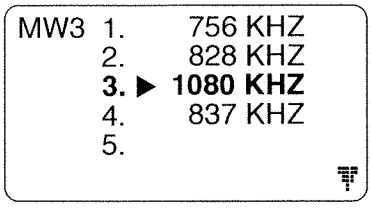

P3U47NL02

3. Press one of the keys 1...3 to select one of the stations stored in the first three memory positions.

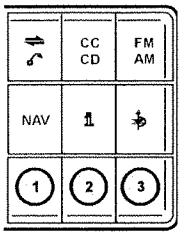

P3U37NL03

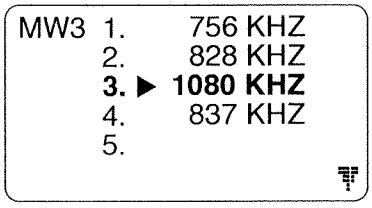

P3U47NL04

Autostore

Use the AUTOSTORE function to create a list of AM stations. Stored stations are listed in decreasing order of reception quality. The list is not updated automatically. To update, call up the AUTOSTORE function again. Only the station frequencies are listed.

Starting autostore

While in the main menu, press key MN RET to select the option AUTOMEM. and press the knob (1) to confirm; the display shows the message RICERCA EMITTENTE PREGO ATTENDERE (SEARCHING FOR STATION, PLEASE WAIT).

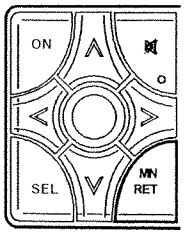

P3U47NL05



P3U47NL06

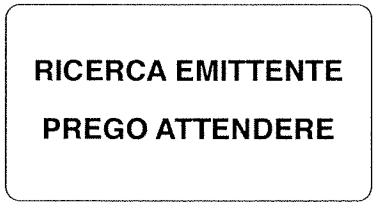

P3U47NL07

After Autostore has been pressed, an updated list of stations is displayed.

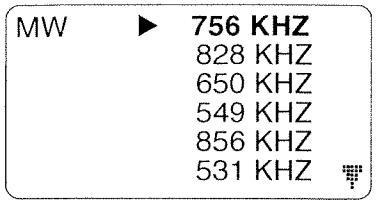

P3U48NL01

Selecting a station from the Autostore list

Press one of the keys ∧/∨ to select the required station and press the knob to confirm; the radio broadcasts the selected station.

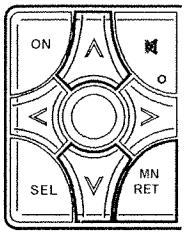

P3U35NL01

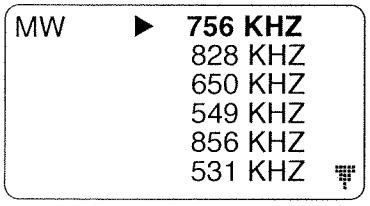

P3U48NL03

CASSETTE FUNCTION

Playing cassettes

Whichever operating mode is currently active, when a cassette is inserted, the system begins to play it. It is possible to switch to cassette mode even if the cassette is already inserted and another mode is active. To switch the system to cassette mode, press key CC CD.

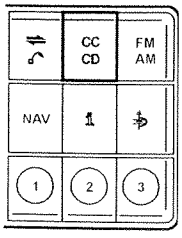

P3U48NL05

Inserting a cassette

Press key ⏏. Display brightness will dim.
Insert the cassette with side A (or 1) uppermost and the part where the tape is uncovered on the right. The cassette is taken automatically to the stop position. The display lights up and indicates which side is currently ready to play.

Ejecting a cassette

Press key ⏏ for longer than 2 seconds. Display brightness will dim. The cassette is ejected.
If the cassette is not removed, it will automatically be re-inserted after about 6 seconds. The system will then switch to radio mode.

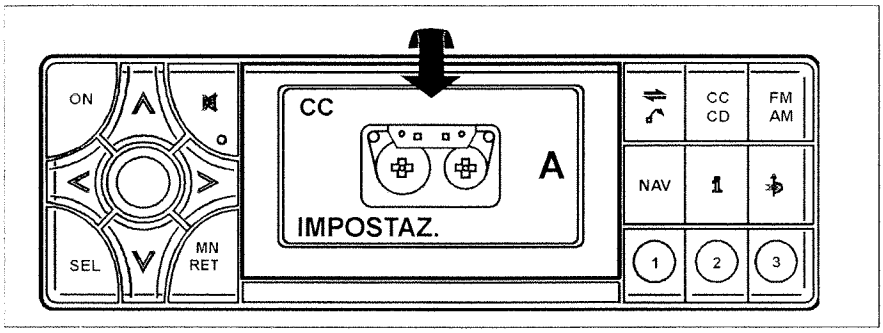

P3U49NL01

Fast-forwarding

Press key ⏩; the display will show the symbol ▶▶ and tape fast forward will begin. To begin playing the tape again, press the rocker switch to any position.
At the end of the tape, the system automatically begins to play the other side.

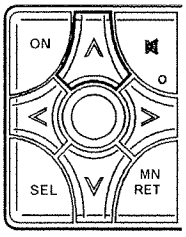

P3U49NL02

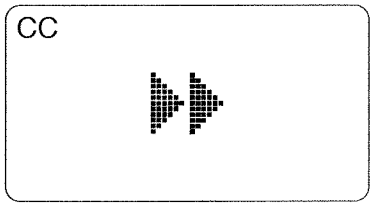

P3U49NL03

Fast rewinding

Press key ⏪; the display shows the symbol ◀◀ while the system begins to fast rewind the tape. To begin playing the tape again, press the rocker switch to any position.
At the beginning of the tape, the system automatically begins to play again.

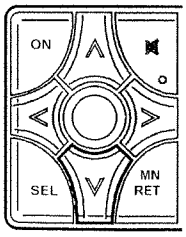

P3U49NL04

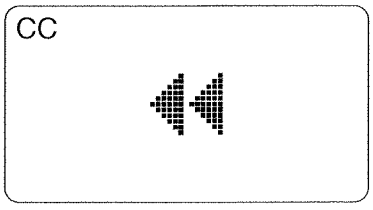

P3U49NL05

Forward track search

Press key ⏭. The display shows the symbol ▶| while the system winds the tape forward to the next track. to begin playing the cassette again press the rocker key at any point.
At the end of the tape, the system automatically begins to play the other side.

Copyright Fiat Auto

55.

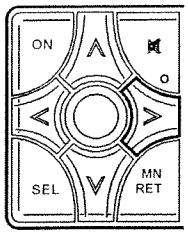

P3U50NL01

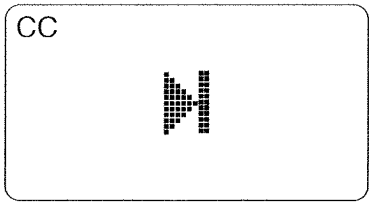

P3U50NL02

Backward track search

Press key ⏮; the display shows the symbol ⏮ while the system winds the tape back to the previous track; to begin playing the cassette again press the rocker key at any point.
The system automatically begins to play the tape once it reaches the start.

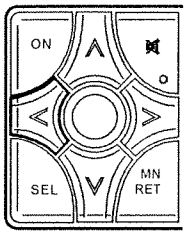

P3U50NL03

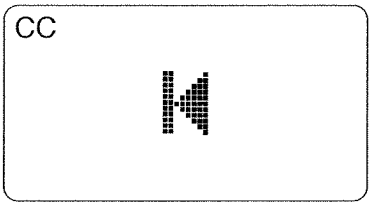

P3U50NL04

Autoreverse

This function can be used to change the cassette side while playing a tape. Press key ⏏. The display will show letter A or letter B; at the end of the tape, the system automatically begins playing the other side.

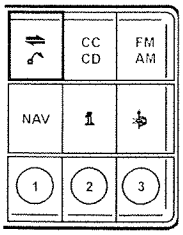

P3U50NL05

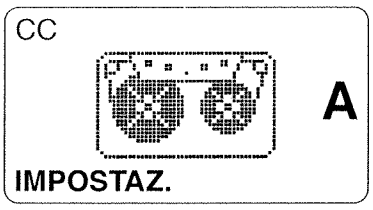

P3U50NL06

NOTE *If the tape gets stuck during playing, the system may automatically begin to play the other side. Check the cassette in this case. Sometimes the tape only needs rewinding. If the cassette player is defective, the display will show the message ERRORE CC (CC ERROR) and the cassette will be ejected.*

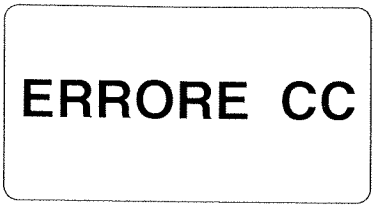

P3U50NL07

Switching between tape types

The system automatically detects and activates play mode and displays tape type: ferric, chrome or metal.

Scanning tracks (Scan)

Press key ▲ for longer than 2 seconds. The system emits an acoustic signal and begins scanning the tracks; tracks are played in sequence for 8 seconds each. The message SCAN apears on the top row of the display. To hear a track all the way through, press key ▲ and scanning will stop.

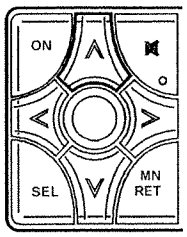

P3U49NL02

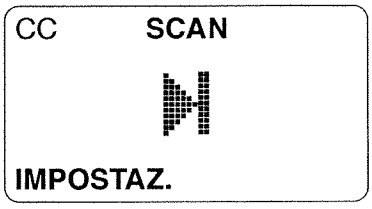

P3U51NL02

Impostazione cc (cc setting)

While in the menu "IMPOSTAZIONE CC (CC SETTING)" you can turn on and off Dolby-B and Salto spazio (skip space) functions. Press knob to recall the menu.

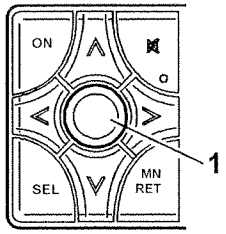

P3U03NL02

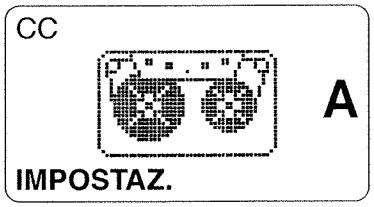

P3U51NL04



P3U51NL05

Dolby-B*

Press one of the keys ▲/▼ to select the option DOLBY-B; press key ◀ to activate the hiss reduction function and key ▶ to deactivate. Current status is highlighted on the display in negative. To re-display the main cassette play mode menu press key MN RET or wait for 6 seconds without pressing other keys. If the Dolby-B function has been activated, the display shows the symbol DD.

* The Dolby system reduces hiss on magnetic tapes and is produced under licence from the Dolby Laboratories Licensing Corporation. The word Dolby and the double D symbol are trademarks of Dolby Laboratories Licensing Corporation.

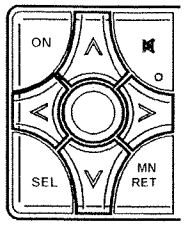

P3U38NL03

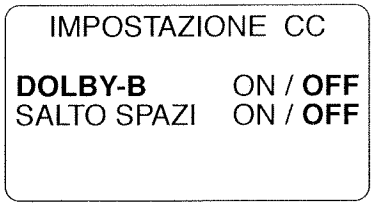

P3U51NL07

Skipping blanks

If a pause continues for longer than 10 seconds while playing a cassette, the tape is forwarded until the beginning of the next track.
Press one of the keys ∧/∨ to select the option SALTO SPAZIO (SKIP SPACE). Press key ◁ to activate the function and key ▷ to deactivate; current status is highlighted on the display in negative. To re-display the main cassette play mode menu press key MN RET or wait for 6 seconds without pressing other keys. If the Skipping blanks function is active, the display shows the code SB.

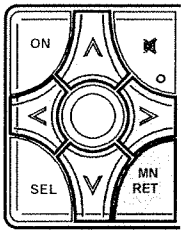

P3U52NL01

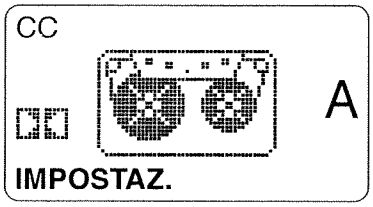

P3U52NL02



P3U52NL03

CD FUNCTION (options)

Multiple CD player

When the system is fitted with a multiple CD player, this device is ready for use as soon as the CD loader is turned on. Take care to insert the loader the right way round and close the sliding flap properly after inserting the loader. All multiple CD loader opening controls are operated from inside the car.

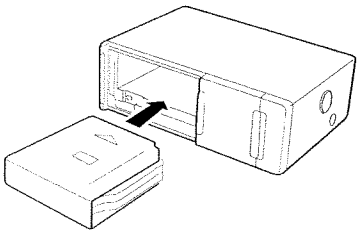
P3U52NL04

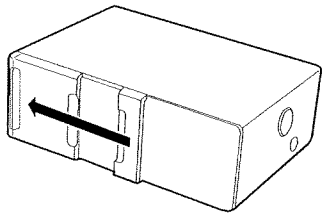
P3U52NL05

CD loader

To remove the CD loader, push the sliding flap to the right and press eject key (1). The loader will be ejected and may be removed completely.

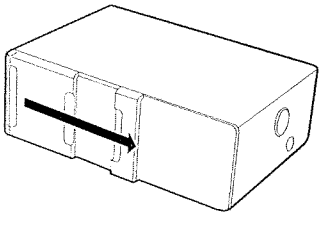
P3U52NL06

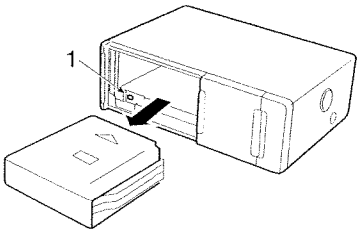

P3U52NL07

To insert a CD, remove a disc holder and put a CD inside. Push the holder containing the CD in the loader until it clicks home. Up to 6 CDs may be loaded. To remove a CD, take the disc holder out of the loader.

NOTE *Do not use 8 cm CDs. When you remove a CD holder, take care to ensure that the CD does not fall out. Disc holders may be left empty, but all holders must be fitted in their housings.*

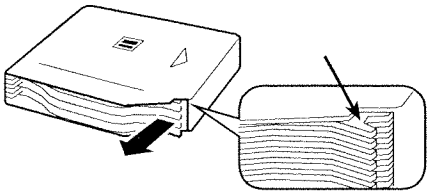

P3U53NL01

Changing/scanning loader

When the control device is deactivated, you can change the multiple player loader. The multiple player detects the change but does not scan the new loader automatically.
The loader scanning function is activated only after activating the check device and then the loader CD list is updated.

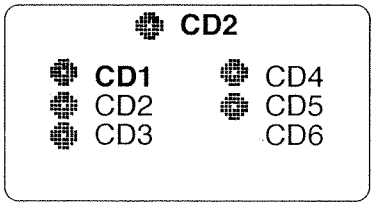

P3U53NL02

The following options may arise:

1. Loader has been changed, the check device is activated and CD playing is not activated. The loader is scanned and the list of CDs in the loader is updated.

2. Loader has been changed, the check device is activated and CD play mode is switched while the loader is scanned. The system then stops scanning and begins to play a selected CD. If no CD has been selected, the first CD in the loader is played. The system carries on scanning the loader if you switch to another sound source.

Copyright Fiat Auto

3. If while in the main menu you press key marked MN RET to select the function CARICAT. (CD-CHANGER) when the loader has not been fully scanned and you then press knob (1) to confirm, the display shows the message SCANSIONE DI CARICATORE PREGO ATTENDERE (SCANNING LOADER, PLEASE WAIT).

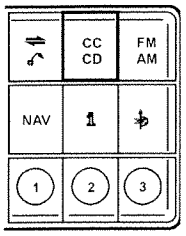

P3U54NL01

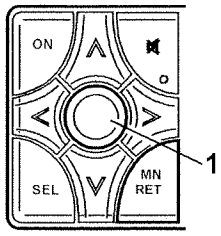

P3U34NL02

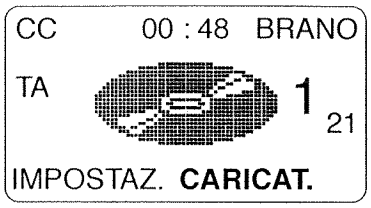

P3U54NL03

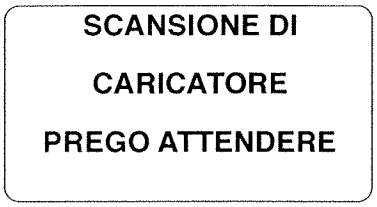

P3U54NL04

Status may change in two ways:

- change at the end of scanning; the display shows an updated list of loader CDs and the previously interrupted track is played.

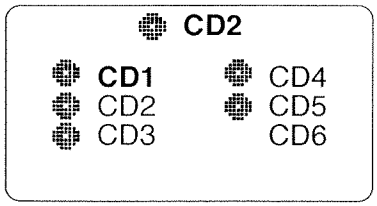

P3U54NL05

- Press key MN RET to stop scanning and the track interrupted when the CARICAT. (CD-CHANGER) function was called up is played.

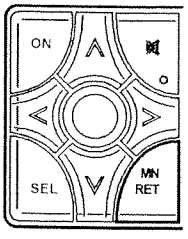

P3U47NL05

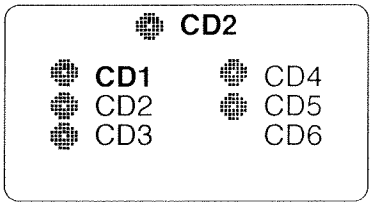

P3U54NL07

4. Once the loader has been scanned, press key MN RET, to select the CARICAT. (CD-CHANGER) function and confirm by pressing knob (1); a list of CDs present in the loader is displayed. CD play is not interrupted. CDs in the loader are marked by the symbol ⊕.

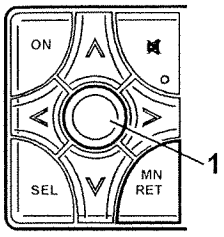

P3U34NL02

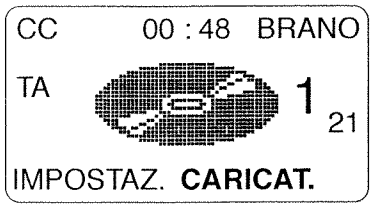

P3U55NL02

To listen to a CD present to the loader, select using keys ∧; ∨ and confirm with knob (1).

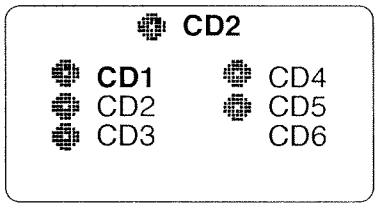

P3U55NL03

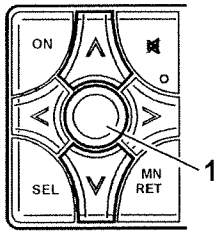

P3U39NL07

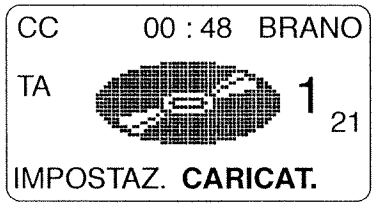

P3U55NL05

Playing CDs

If the temperature becomes too high while a CD is being played, the display shows the message ERRORE CD TEMPERATURE TROPPO ALTO (CD ERROR, TEMPERATURE TOO HIGH), CD playing is interrupted and the system switches to radio mode until the temperature returns to normal.



P3U55NL06

If the temperature drops excessively while listening to a CD, the display shows the message ERRORE CD TEMPERATURA TROPPO BASSA (CD ERROR, TEMPERATURE TOO LOW) but playing is not interrupted.



P3U55NL07

Copyright Fiat Auto

55.

Take care of your CDs to ensure they play properly. Avoid dust build-up and take care not to leave fingerprints on CDs. Do not write on the surface and do not attach anything to CD surfaces. Clean your CDs regularly using CD cleaning cloths and do not use solvents, antistatic sprays etc. After listening to a CD, replace the disc in its case and keep away from sunlight and other heat sources.

The multiple CD player is a class 1 laser product. Whenever the protective cover is opened or if the protective cover is defective or damaged, invisible laser beams constitute a health risk.

Do not remove the protective cover. Mulitple CD player components cannot be serviced or repaired by the user. Service operations must be carried out solely by qualified staff in techncial service centres.

The system may be switched to CD mode from any other operating mode.
To switch to CD mode, press key CC CD.
If the multiple player is not fitted with a loader, the display shows the message MANCA CD (NO CD) for 6 seconds and the sound source selected previously is played. When a loader is fitted, the system checks it.

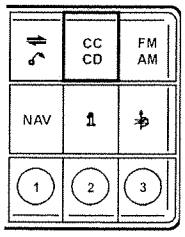

P3U54NL01



P3U56NL02

CDs placed in the loader may be selected using keys ▲ (PREVIOUS CD) or ▼ (NEXT CD).
Empty loader compartments cannot be selected. The display shows the message CARICARE (LOAD) as it waits for the user to make a selection.

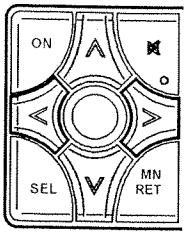

P3U15NL04



P3U56NL04

Once the time required for loading has passed, the display shows the message CD and the number of the loader compartment containing the selected CD. The number of the track currently playing and the total number of tracks on the selected CD are displayed beneath the word BRANO (TRACK)

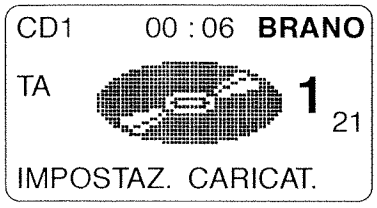

P3U57NL01

Once the last track on a CD has been played, the next CD in the loader is automatically selected and played.

Forward/backward track scanning

To listen to the next track of a CD currently being played, press key ▶.

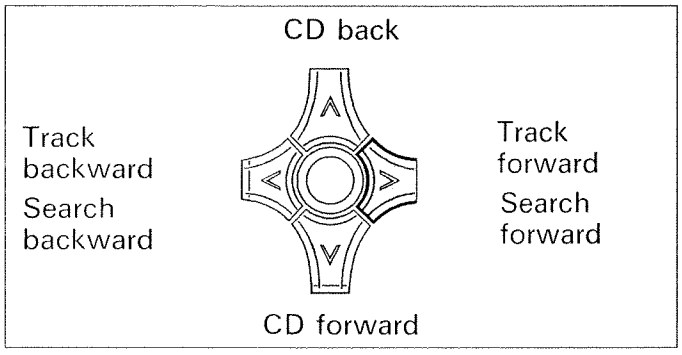

P3U57NL02

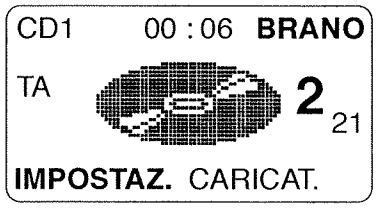

P3U57NL03

To listen to the previous track of a CD currently being played, press key ◀.

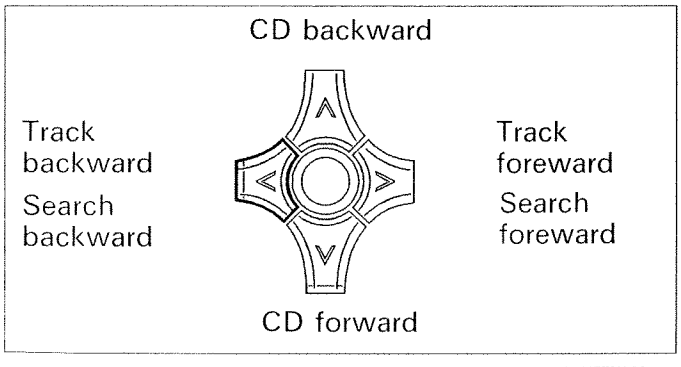

P3U57NL04

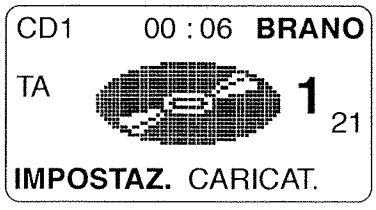

P3U57NL05

Press the skip back key when a a track has been playing for longer than 10 seconds. The track will be played again from the beginning. If the track has been playing for less than 10 seconds, the system will skip to the previous track. To skip several tracks, backward or forward, hold down the rocker key for the required direction until you reach the required track. If you reach the end of a CD while searching for tracks, the search begins again from the first track of the same CD. Similarly, while searching backward, the search begins again from the last track when the first track on the CD is reached.

Copyright Fiat Auto

Fast forward/backward search

Press and hold down key ◀ (backward search) or key ▶ (foreward search), to speed up playing at reduced volume. Release the key to end the search and return volume to normal.
When you reach the end or beginning of a CD in the course of a forward or backward search, the search is stopped. As long as the track search function is active, the display shows the CD position number, track number and track duration.

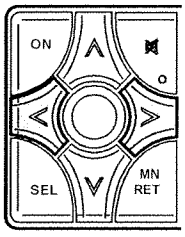

P3U29NL03



P3U58NL02

Searching for tracks using the Scan function

Press key ▲ for longer than 2 seconds; the system will play all tracks on the selected CD in succession for 8 seconds each. The message SCAN appears on the top row of the display. To listen to a track all way through, press key ▲ to stop scanning.

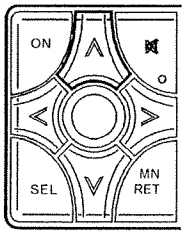

P3U49NL02

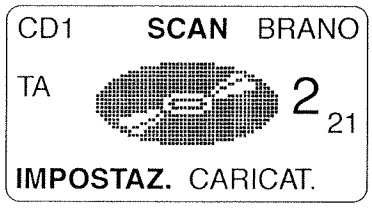

P3U58NL04

CD setting

While in the menu "IMPOSTAZIONE CD (CD SETTING)" you can turn Random (random track search) and Repeat (repeat track) functions on and off. Press knob (1) to call up the menu.

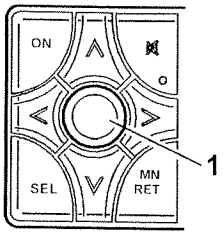

P3U03NL02

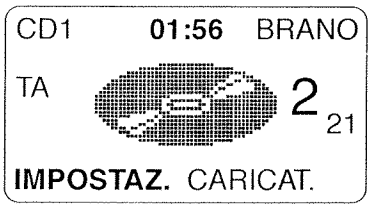

P3U58NL06

Random (Random track search)

Press one of the keys ▲/▼ to select the option RANDOM and turn this function on or off by pressing key ◀ or ▶; active status is highlighted in negative.

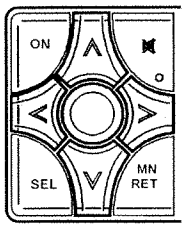

P3U38NL03

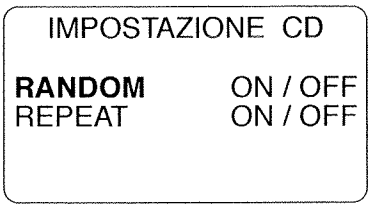

P3U59NL02

To re-display the main cassette play mode menu CD press key MN RET or wait for 6 seconds without pressing other keys. If the Random function is active, the display shows the code RND.

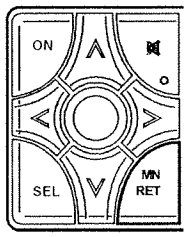

P3U47NL05

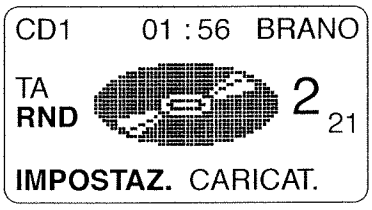

P3U59NL04

CD tracks are selected and played in random order. Once all CD tracks have been played, another CD is loaded and the tracks of this CD are also played in random order.
To skip the current track press key ▶. The next track is chosen at random from among unplayed tracks.
To repeat the track you are listening to, if you have been playing it for at least 10 seconds, press key ◀.
Press key ◀ while listening to a track that has not yet been playing for 10 seconds to play another track chosen at random.

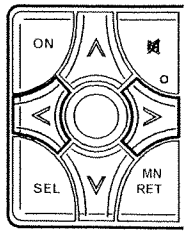

P3U29NL03

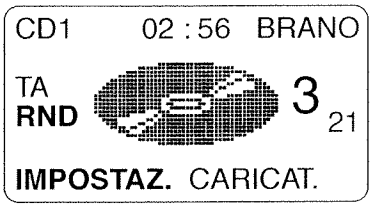

P3U59NL06

55.

While in the menu "IMPOSTAZIONE CD (CD SETTING)" turn the Repeat function on or off (track repetition); press knob (1)) to call up the menu.

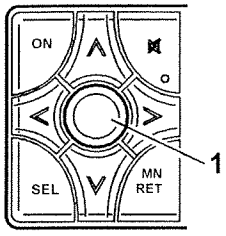

P3U03NL02

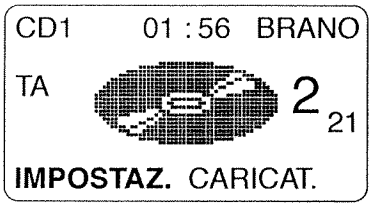

P3U60NL02

Repeat (track repetition)

Press one of the keys ▲/▼ to select the option REPEAT; to turn this function on or off, simply press key ◀ or ▶; Active status is highlighted in negative.

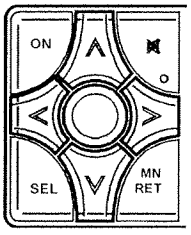

P3U38NL03

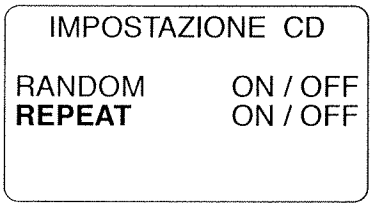

P3U60NL04

To re-display the main CD play mode menu press key MN RET or wait for 6 seconds without pressing other keys. If the Repeat function has been activated, the display shows RPT.
The current track will be repeated until the function is turned off or until a new track is selected by pressing one of the keys ◀/▶.

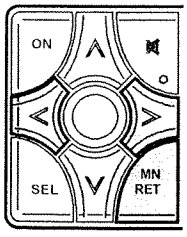

P3U60NL05

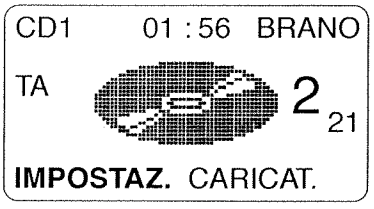

P3U60NL06

CD error

If a problem arises with the multiple CD player while the CD is playing, the display shows ERRORE CD (CD ERROR) and the system switches to radio mode, Consult your dealer if you cannot eliminate the problem.

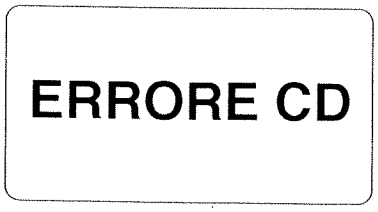

P3U60NL07

TESTING THE RADIO NAVIGATION SYSTEM

The radio navigation system includes a system test function. Carry out the test with the car running and the radio navigation system off.
Press the keys highlighted in the figure to enter guided testing mode.

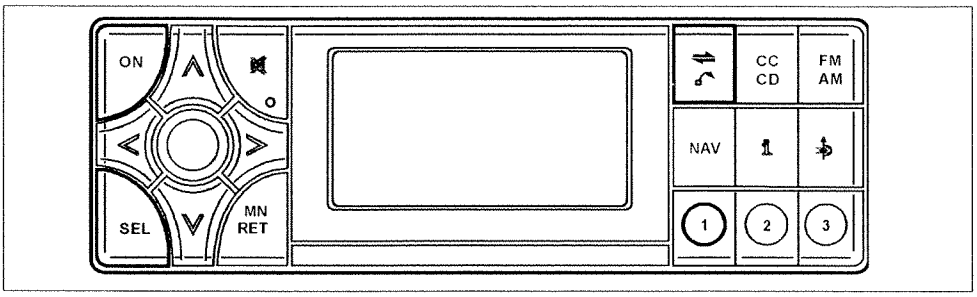

P3U61NL01

The display will show the message "CHECK SISTEMA IN CORSO (SYSTEM CHECK IN PROGRESS) for about 6 seconds.

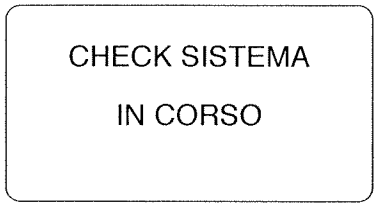

P3U61NL02

After 6 seconds, the display shows a second message: " CHECK COMMUNICAZIONE SISTEMA COMPLETO (COMMUNICTION SYSTEM CHECK COMPLETED)"; to continue testing, press knob (1).



P3U61NL03

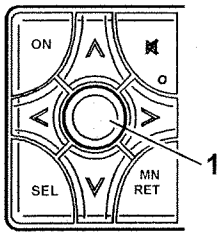

P3U03NL02

Using keys ▲; ▼ select the vehicle on which the test is to be carried out (LANCIA KAPPA in this case) and confirm your choice by pressing knob (1).



P3U61NL05

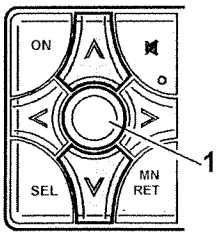

P3U15NL01

55.

Using keys ▲; ▼ to select the correct tyre size and confirm by pressing knob (1).

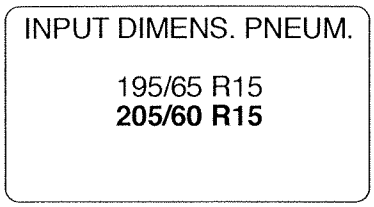

P3U62NL01

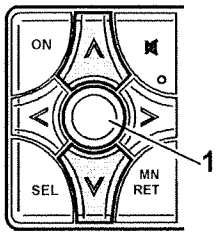

P3U15NL01

The display will ask you to move the car foward about 5 metres "PROSEGUIRE AVANTI (MOVE FORWARD) >5M". Move forward and stop the car after the beep (ATTENDERE BEEP (WAIT FOR BEEP).

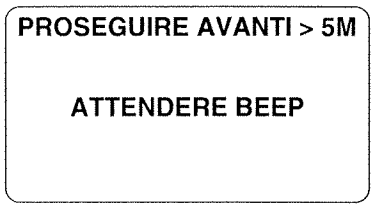

P3U62NL03

After the beep, you will be asked to engage reverse ("INSERIRE MARCIA INDIETRO (ENGAGE REVERSE)"). Wait for a further beep to confirm the operation has been carried out (ATTENDERE BEEP (WAIT FOR BEEP).



P3U62NL04

The display shows the last test confirmation method. If errors are present a code is displayed that indicates the type of fault in the radio navigation system.
If the test is completed without errors, the message SPEGNERE (TURN OFF) appears. Then press the knob to confirm the test is completed.

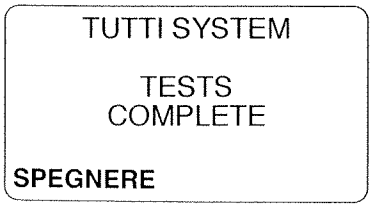

P3U62NL05

The table overleaf shows the error codes that may appear of the system is faulty.

ERROR CODE	ERROR DESCRIPTION	TESTING	RESETTING
999	Error in communication (transmission)	No communication (transmission) between central unit and navigation unit	1) check system 2) check connectors 3) check power
998	CD-ROM is not free	The CD-ROM drive is not not indicating that the CD-ROM is free	1) check the CD-ROM is inserted and the drive is closed
997	CD-ROM reading error	The CD-ROM error does not indicate a reading error	1) check the CD-ROM (fingerprints, scratches etc.) replace the CD-ROM
996	CD-ROM writing is incorrect	The CD-ROM drive is not indicating writing correctly	1) check CD-ROM (writing) replace CD-ROM
995	Calibration setting mode stopped	1) The radio navigation unit is not starting the calibration software 2) Does not transmit correctly while in "navigation" mode	1) reset the system without supplying the radio navigation system, wait 1 minute and restart the system 2) Check the system
994	Current calibration parameters cannot be loaded	1) Does not transmit correctly while in "navigation" mode	1) reset the system without supplying the radio navigation system, wait 1 minute and restart the system 2) check the system
993	New calibration parameters have not been set	1) Does not transmit correctly while in "navigation" mode	1) reset the system without supplying the radio navigation system, wait 1 minute and restart the system 2) check the system
992	The radio navigation unit test procedure does not re-install	1) Does not transmit correctly while in "navigation" mode	1) reset the system without supplying the radio navigation system, wait 1 minute and restart the system 2) check the system
991	Radio navigation system test results cannot be read	1) Does not transmit correctly while in "navigation" mode	1) reset the system without supplying the radio navigation system, wait 1 minute and restart the system 2) check the system
666	Test failure	Radio navigation system microprocessor status not operational	1) reset the system without supplying the radio navigation system, wait 1 minute and restart the system 2) check the system

Copyright Fiat Auto

55.

ERROR CODE	ERROR DESCRIPTION	TESTING	RESET OPERATIONS
011	No signal Check speedometer sensor cable	No signal received from speedometer sensor	1) check wire/connectors 2) check the speedometer sensor
021	Multifunction keys not operational	Multifunction keys not operational	1) check system 2) check connectors 3) check multifunction keys
031	Short circuit in GPS aerial	The GPS aerial is short--circuited	1) check the lead 2) check the GPS aerial 3) check the GPS aerial connector
032	Break in GPS aerial circuit	The GPS aerial lead is broken	1) check the lead 2) check the GPS aerial 3) check the GPS aerial connector
033	No GPS signal present	No GPs signal received	1) test must be carried out in external environments 2) the GPS aerial must receive at least three satellite signals
041	Audio test	System not working, speaker defective, speaker not connected to the radio navigation system	1) check speaker 2) check speaker system 3) check speaker connectors 4) check radio navigation system

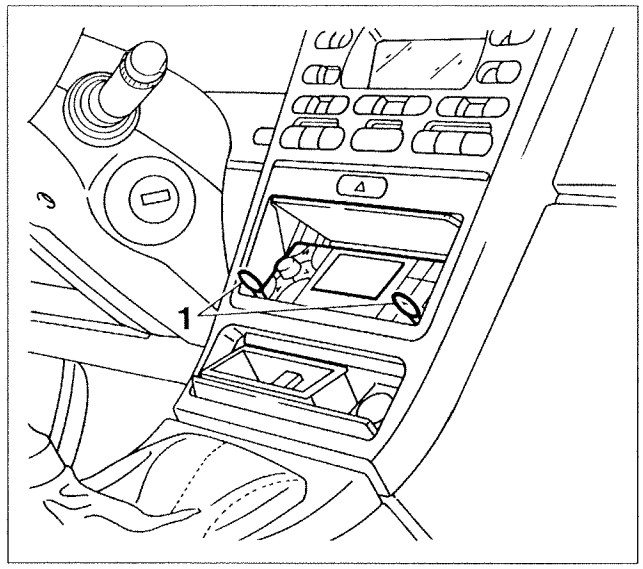

P3U65NL01

REMOVING-REFITTING CAR RADIO - NAVIGATION SYSTEM

- Disconnect the battery negative terminal;
- Insert the special tool (1) supplied with the car in the slots on the radio/navigation system. Fit the tool components correctly until they click into place. Tool components are marked left and right respectively;

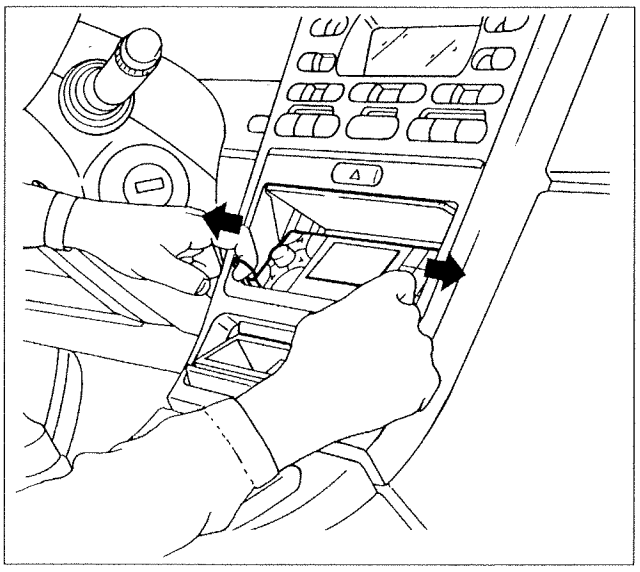

P3U65NL02

- proceed as shown in the figure to push the tools out and pull up the radio. Undo the connectors when the radio is fully removed;

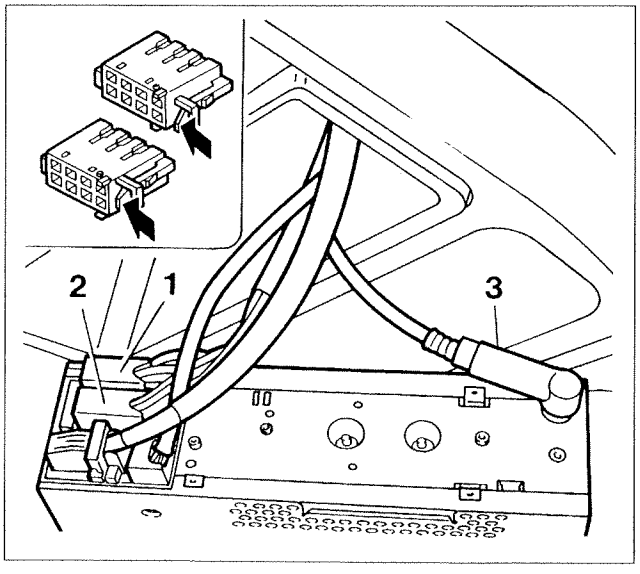

P3U65NL03

- disconnect the lead of radio aerial (3) and connectors (1-2) shown in the figure by undoing the arrowed points;

55.

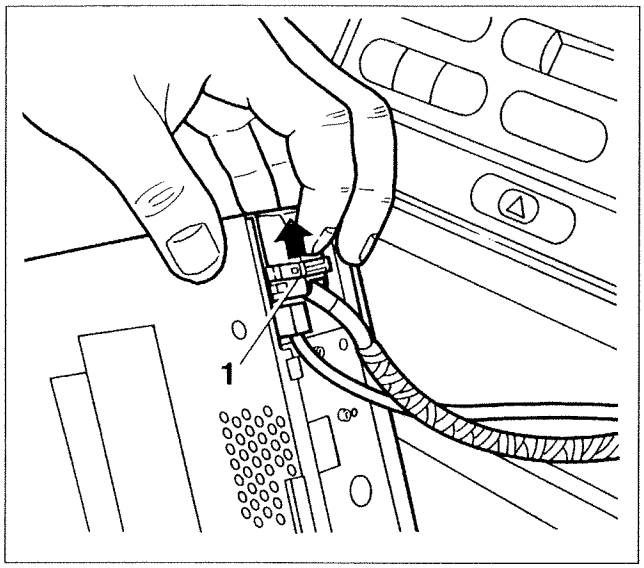

P3U66NL01

- press the safety catch on lever (1) downward, then move the lever in the arrowed direction;

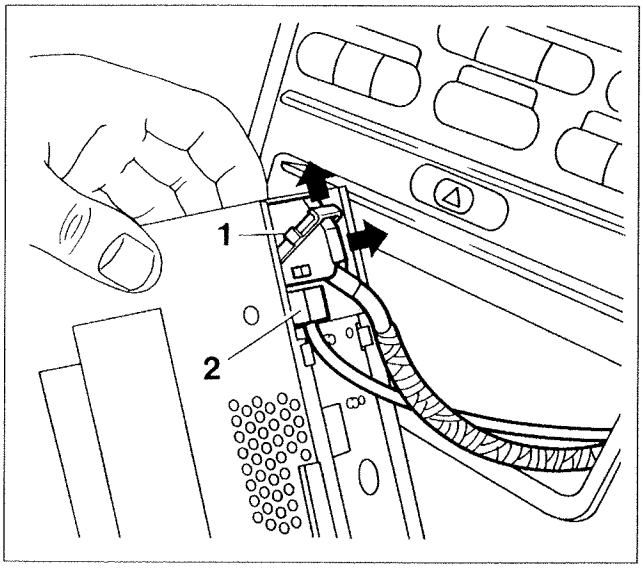

P3U66NL02

- finally move lever (1) and disconnect connector from its housing;
- remove connector (2) from its seat by undoing the connector safety catch, then remove the radio navigation system;

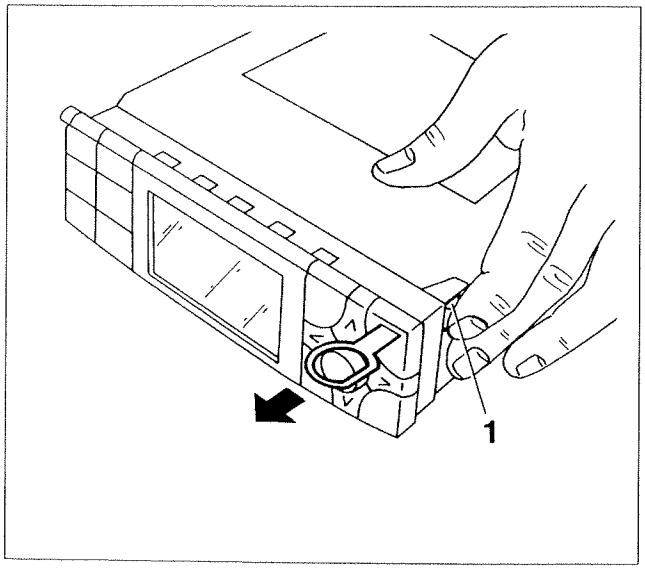

P3U66NL03

- to remove the tool, press on points (1) indicated and remove in the arrowed direction.

REMOVING-REFITTING RADIO NAVIGATION SYSTEM CD DRIVE

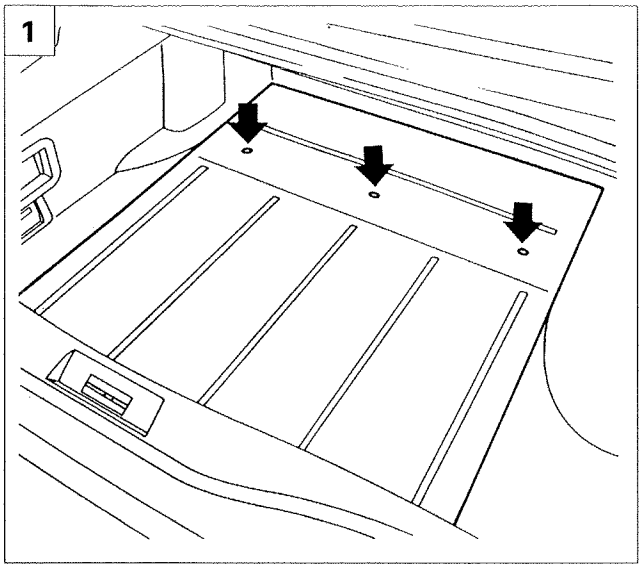

P3U67NL01

- Disconnect the battery negative terminal.

1. Working from the engine bay, remove the floorpan protecting by undoing the retaining studs use tool 1878077000;

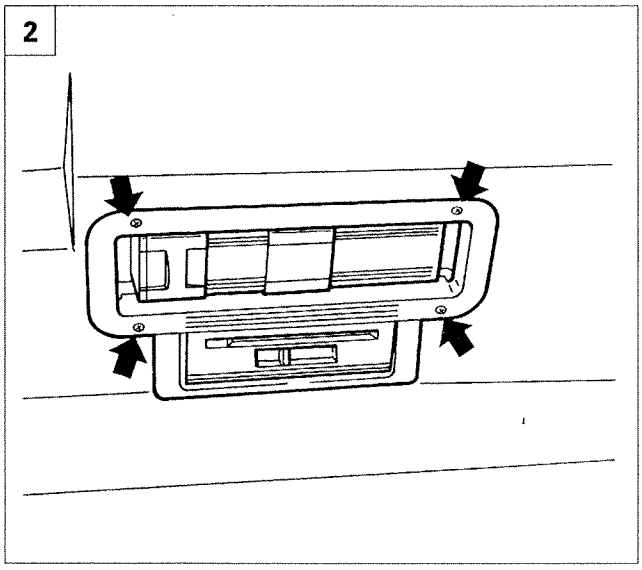

P3U67NL02

2. unscrew the retaining bolts and remove the panels of the radio navigation system CD-ROM drive and the CD-changer;

3. remove retaining studs use tool 1878077000 and move the luggage compartment trim slightly to the left;

4. unscrew bolts indicated in figure and remove the guard, use tool 1878077000 to remove the fastening stud shown in the figure;

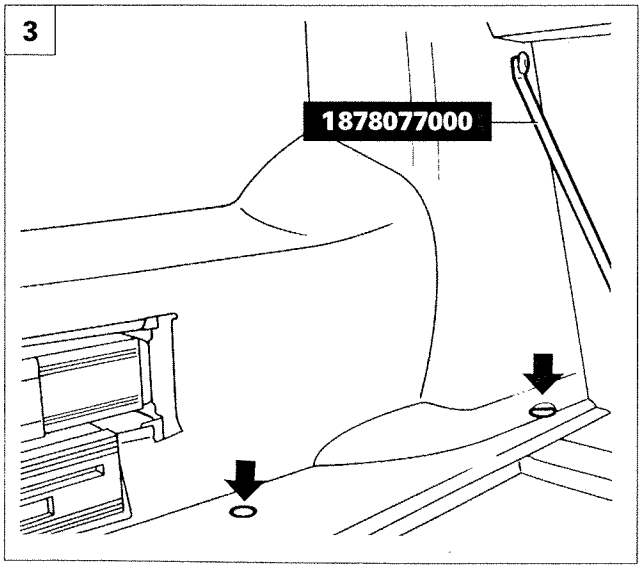

P3U67NL03

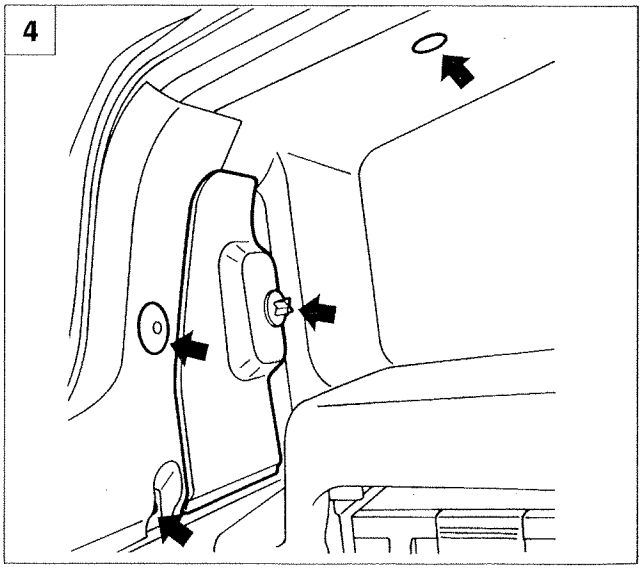

P3U67NL04

Copyright Fiat Auto

55.

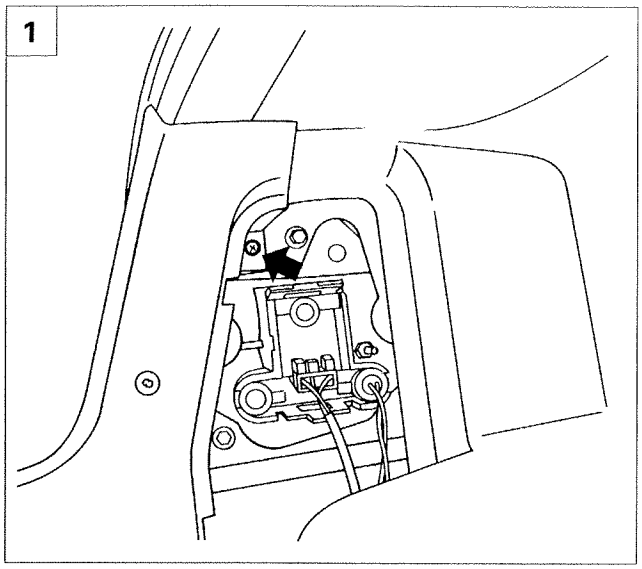

P3U68NL01

1. unscrew retaining screw indicated in the figure and move the moulding slightly. Remove the left side luggage compartment trim;

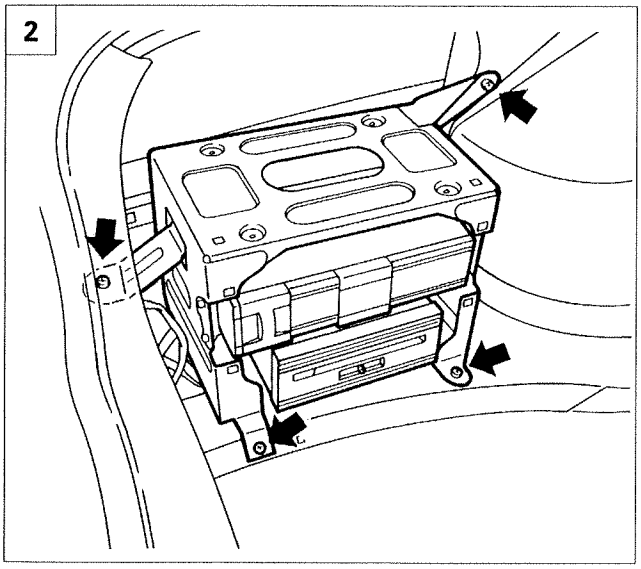

P3U68NL03

2. unscrew bolts indicated in figure and move the mount with CD-ROM drive in order to disconnect connectors;

3. remove the collar (1), then disconnect the 5-pole connection to CD - changer (2); navigation system aerial connection (3); CD-ROM drive connection for navigation system (4). Remove the support with CD-ROM drives;

4. unscrew the bolts fastening the CD-ROM drive mount; do the same thing on the left side of the CD-ROM drive mount;

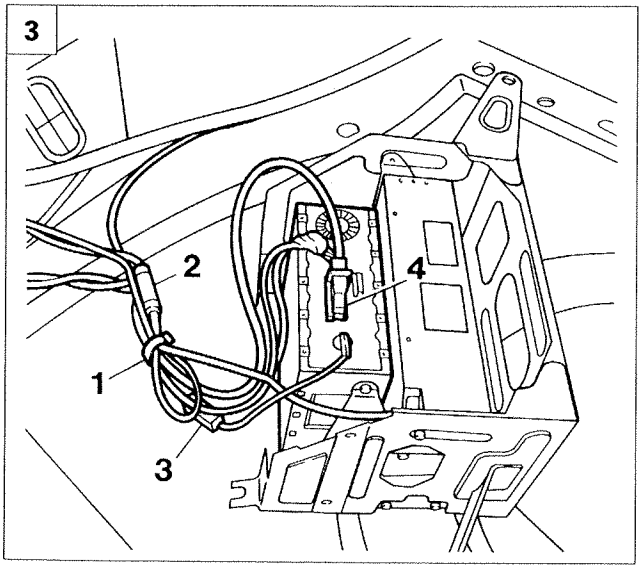

P3U69NL01

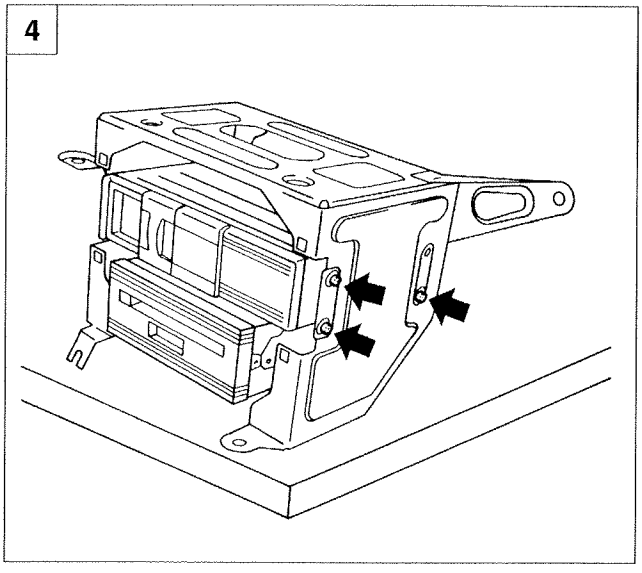

P3U69NL02

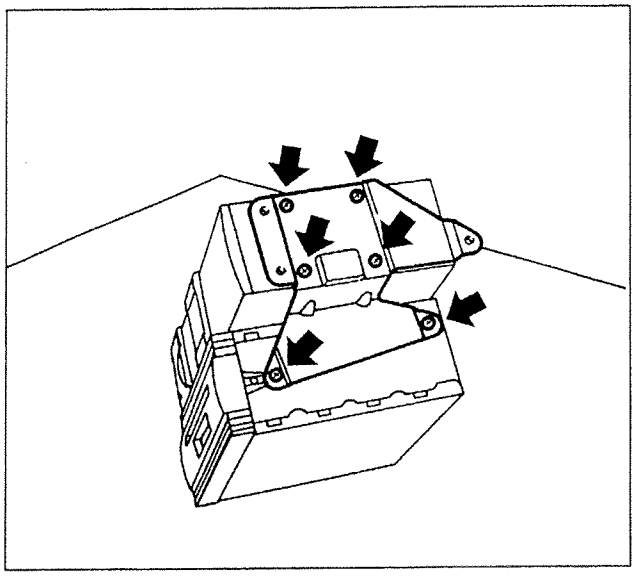

P3U69NL03

- loosen the fixing bolts shown in the diagram; proceed in the same way on the left side for the CD-ROM support; then separate the CD-ROM player for the navigation system and the CD - changer.

LOCATION OF COMPONENTS ON VEHICLE

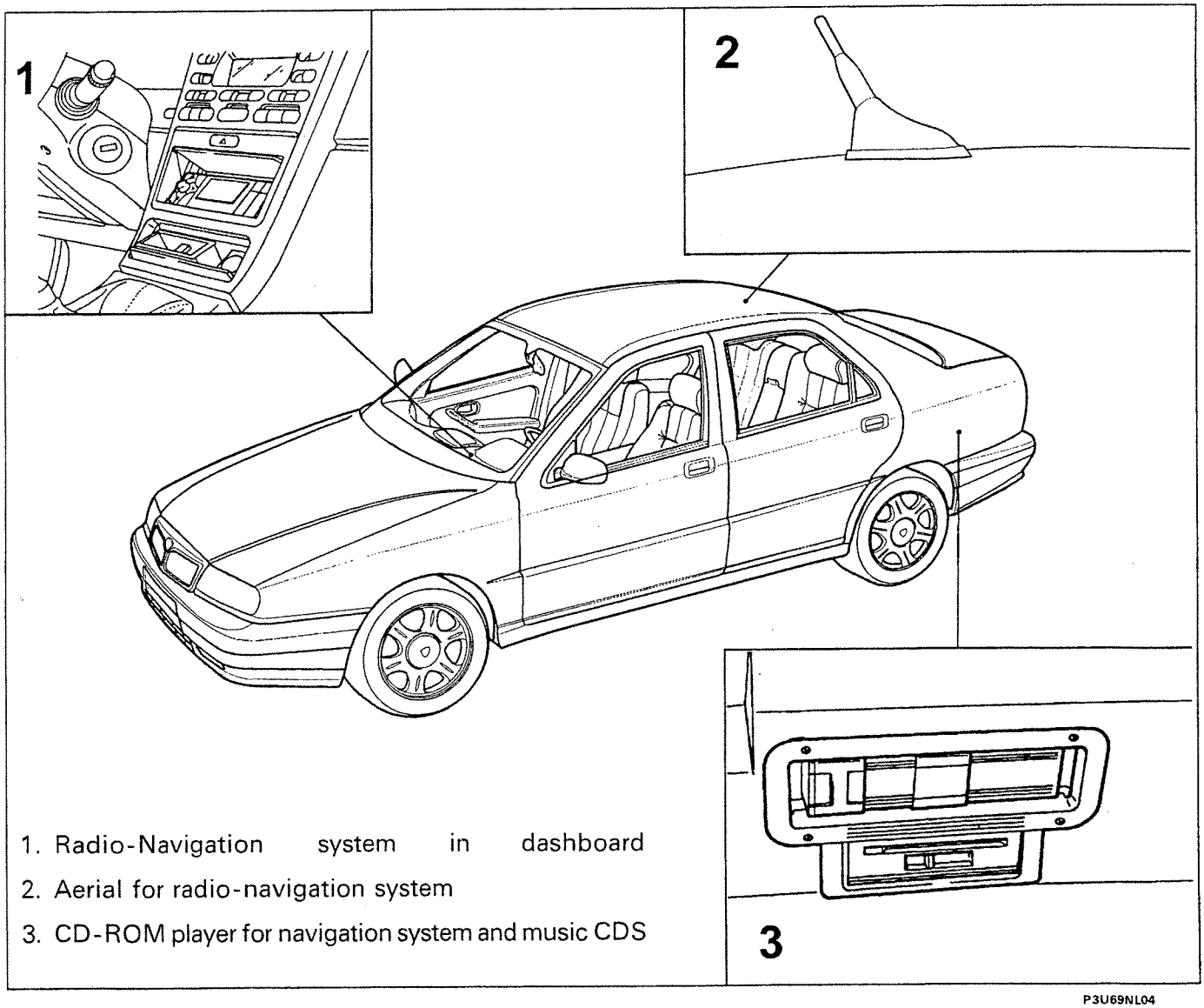

1. Radio-Navigation system in dashboard
2. Aerial for radio-navigation system
3. CD-ROM player for navigation system and music CDS

P3U69NL04

55.

INTRODUCTION

There is a new Air Bag system fitted on the LANCIA k 98 range which differs from those in current production through the addition of a passenger presence sensor "PPD" in the front seat which has the function of only allowing the operation of the passenger Air Bag and pretensioner if the seat is occupied.

In addition to the equipment fitted as standard, there is a system for protection against side impacts known as a Side Bag which is available on request.

Location on vehicle of Air Bag and Side Bag system components

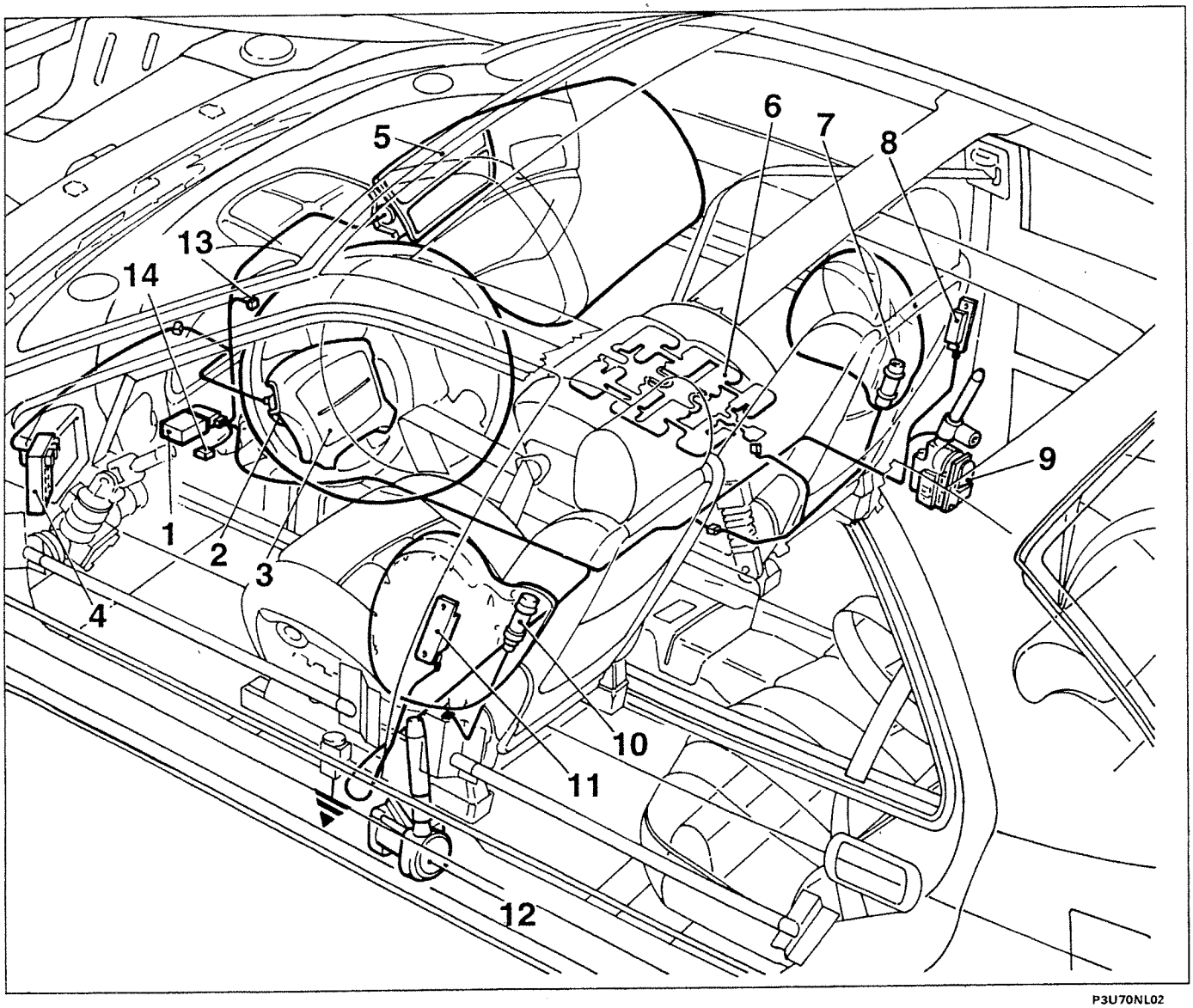

P3U70NL02

1. Air bag control unit
2. Clock spring
3. Driver's Air Bag module
4. Junction unit
5. Passenger Air Bag module
6. Passenger presence sensor (PPD)
7. Passenger Side Bag module
8. Passenger satellite deceleration sensor (side impact recognition)
9. Passenger side pretensioner
10. Driver's Side Bag module
11. Driver's satellite deceleration sensor (side impact recognition)
12. Driver's pretensioner
13. Air Bag system failure warning light
14. Diagnostic socket

PASSENGER PRESENCE SENSOR "PPD"

A passenger presence sensor has been introduced to the 98 range Air Bag system, fitted as standard, which means that if there is no passenger, the front passenger Air Bag, seat belt pretensioner and passenger Side Bag (if fitted) are not activated.

Passenger seat with passenger presence sensor "PPD"

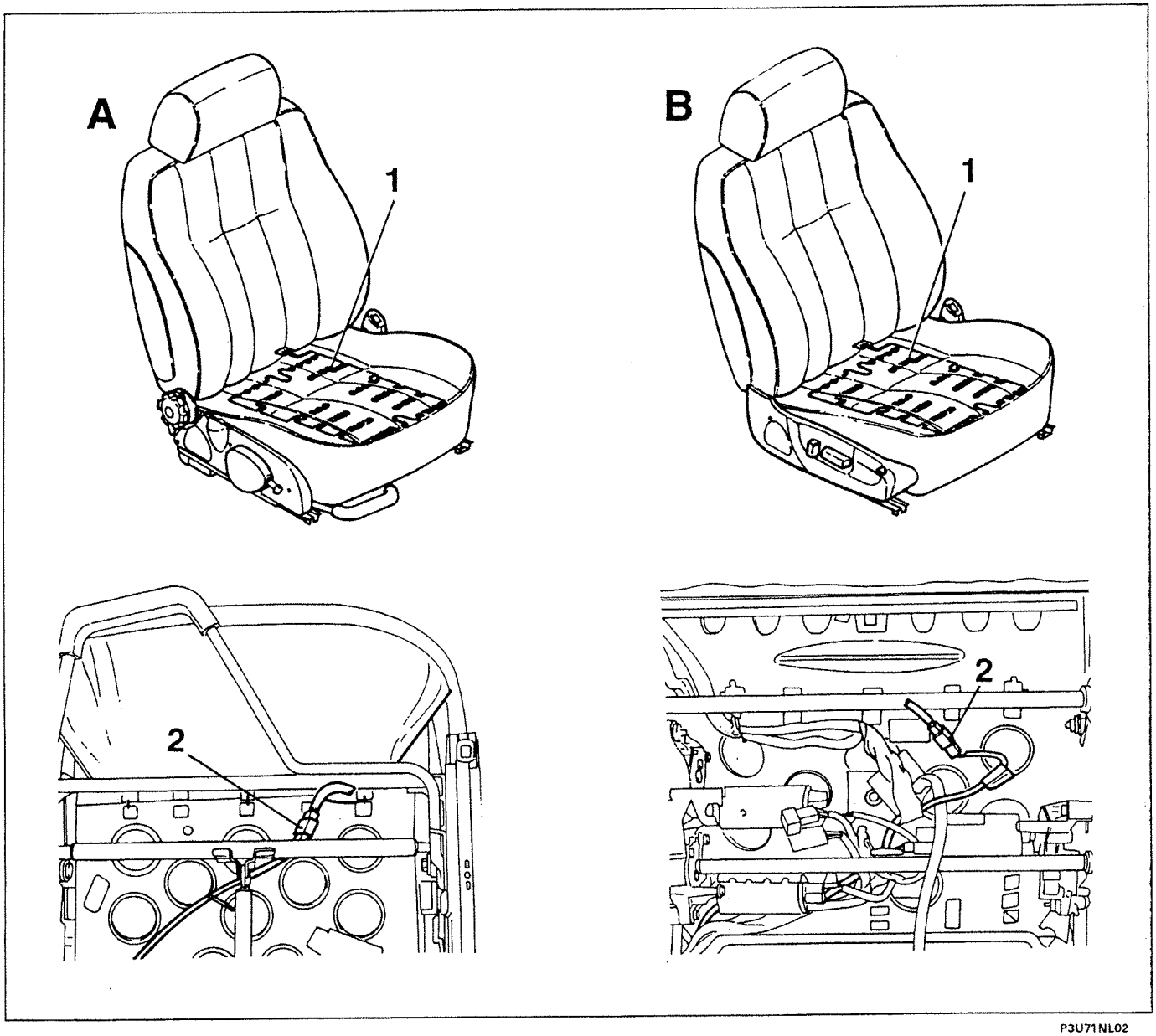

P3U71NL02

A. Manually adjusted passenger seat
B. Passenger seat with motorized adjustment

1. Passenger presence sensor "PPD"
2. Passenger presence sensor connector

The Passenger Presence Sensor is a device capable of detecting the presence of weight on the seat cushion and transmitting this information to the electronic control unit which manages the Air Bag system to which the connector in the lower part of the seat secured to the base of the seat on the right side is electrically connected by means of a cable (yellow coloured outer casing).

Copyright by Fiat Auto

55.

If there is no passenger, the control unit disables the front and side Air Bags (where fitted) and the passenger seat belt pretensioner.

This solution allows a considerable reduction in repair costs in the case of an accident where the activation of the passenger restraint and protection systems where not needed as there was no passenger.

The sensor consists of a thin flexible plastic laminated element, adhesive on the side in contact with the seat upholstery containing a printed circuit which determines the operation; it covers the entire area of the seat cushion with the exception of the two side panels and is fitted between the upholstery and the cover without altering the functional, aesthetic and ergonomic properties of the seat.

The presence of a passenger on the seat is detected even if the passenger is not sitting properly and irrespective of whether or not they are wearing a seat belt.

The sensor has also been designed to be compatible with the presence of a seat heater (available on request). If there is a seat heater pad, the sensor is positioned underneath it.

The system is calibrated in such as way as to ensure the detection of a weight of at least 12 kg in all operating conditions (from -35 to +70°C). For lesser weights the response depends on the operating conditions (temperature, morphology and position of the weight, type of cover, whether or not a heater pad is fitted).

The passenger presence sensor and the wiring branch are continuously checked whilst the vehicle is in use; the fault diagnosis involves checking for a short circuit or open circuit.

In the case of a sensor malfunction, the readings are ignored and the system behaves like a traditional system keeping the passenger front and side Air Bags and pretensioner permanently ready to be activated; at the same time, the red warning light remains on.

Instrument panel

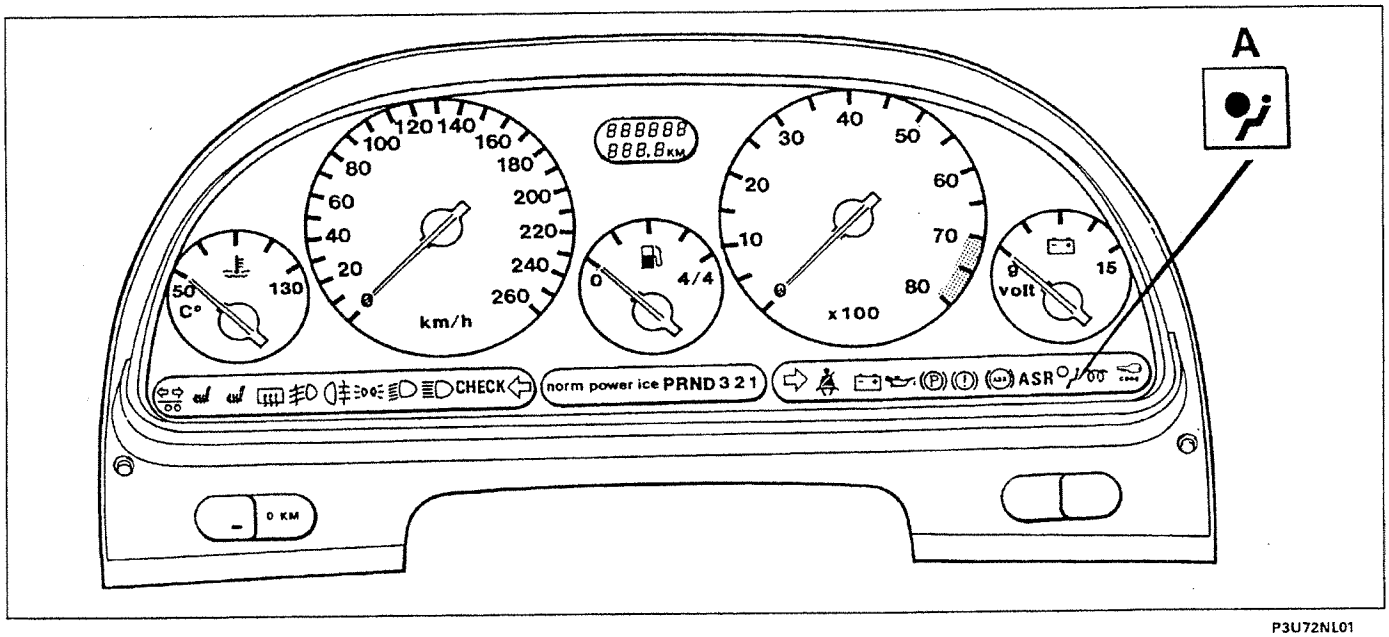

P3U72NL01

A. Air Bag system failure warning light

CONTROL UNIT FOR AIR BAG SYSTE, PRETENSIONERS AND PASSENGER PRESENCE SENSOR (PPD)

The Air Bag system fitted on the LANCIA k 98 range has a new electronic control unit which differs from the previous version through the addition of a connection with the passenger presence sensor and the inclusion of control functions.

Diagram showing connections between control unit and components

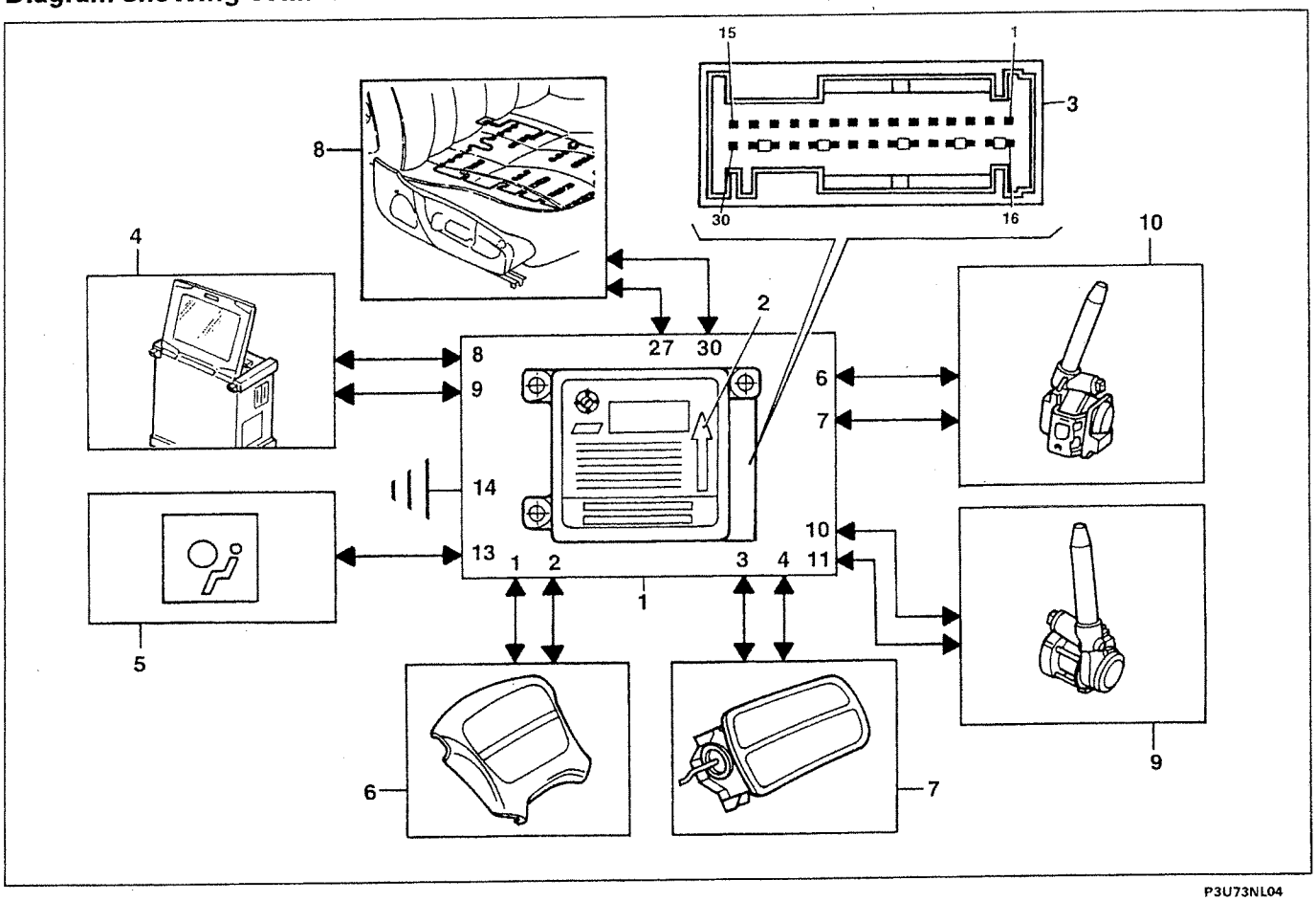

1. Electronic control unit
2. Control unit fitting direction arrow
3. 30 pin connector (see PIN OUT)
4. Diagnostic equipment
5. Failure warning light
6. Driver's Air Bag module
7. Passenger Air Bag module
8. Passenger presence sensor
9. Driver's seat belt pretensioner
10. Passenger seat belt pretensioner

Control unit Pin out

1. Driver's AIR BAG
2. Driver's AIR BAG
3. Passenger AIR BAG
4. Passenger AIR BAG
5. Spare
6. Passenger pretensioner
7. Passenger pretensioner
8. Earth for diagnostic equipment
9. Serial line (K) for diagnostic equipment
10. Driver's pretensioner
11. Driver's pretensioner
12. Spare
13. System failure light
14. System earth
15. Starting (+15)
16. Short circuit
17. Short circuit
18. Short circuit
19. Short circuit
20. Spare
21. Short circuit
22. Short circuit
23. Wiring recognition input (*)
24. Spare
25. Short circuit
26. Short circuit
27. Passenger presence sensor
28. Short circuit
29. Short circuit
30. Passenger presence sensor

(*) Not present on LANCIA k Coupè

Copyright by Fiat Auto

55.

FRONT SEAT

The front seat, with manual or motorized adjustment, only differs in relation to the previous version, through the installation of the passenger presence sensor (PPD) in the passenger seat.

Front seat with motorized adjustment

The front seat with motorized adjustment is equipped with electric motors which allow the following adjustments:
- head restraint height;
- backrest angle;
- front part of cushion (height adjustment);
- rear part of custion (height adjustment);
- seat advance.

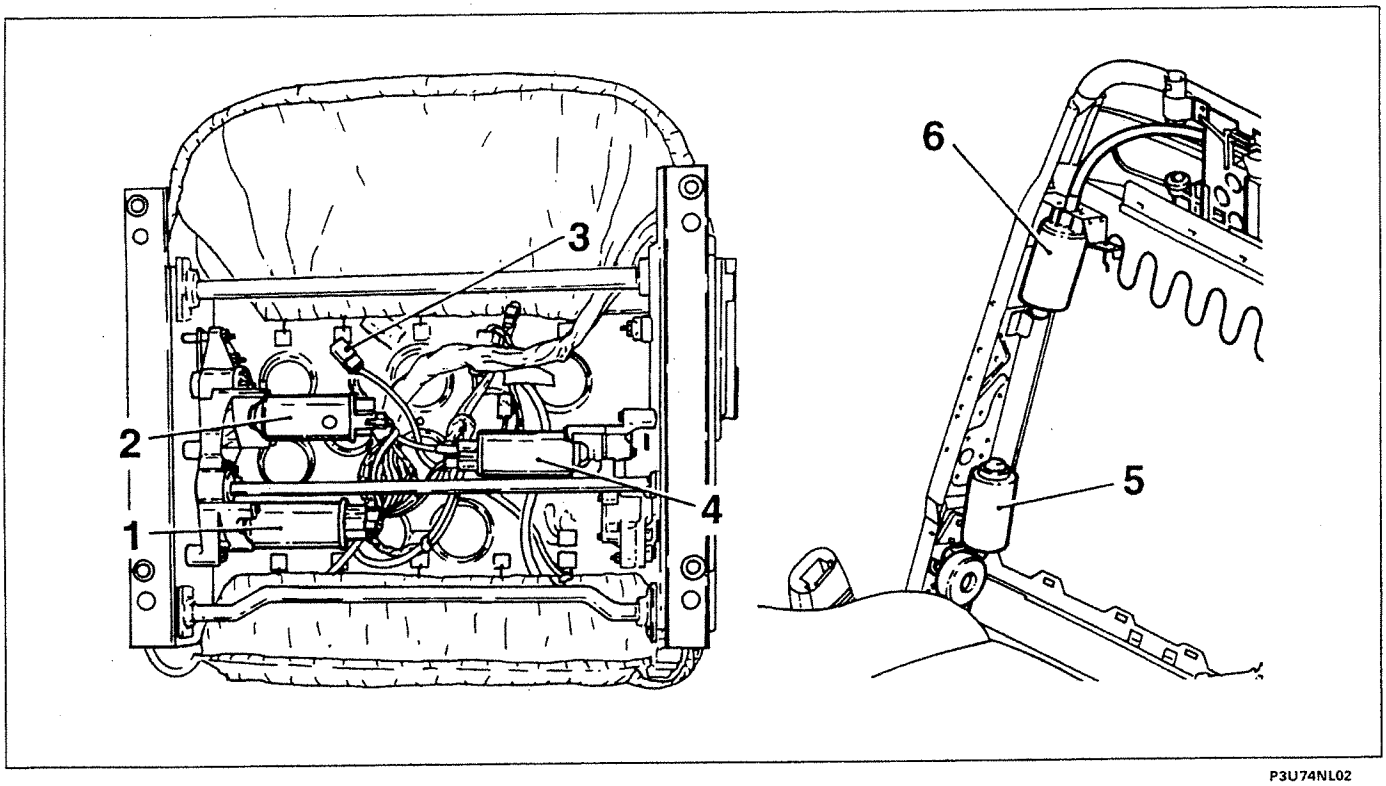

P3U74NL02

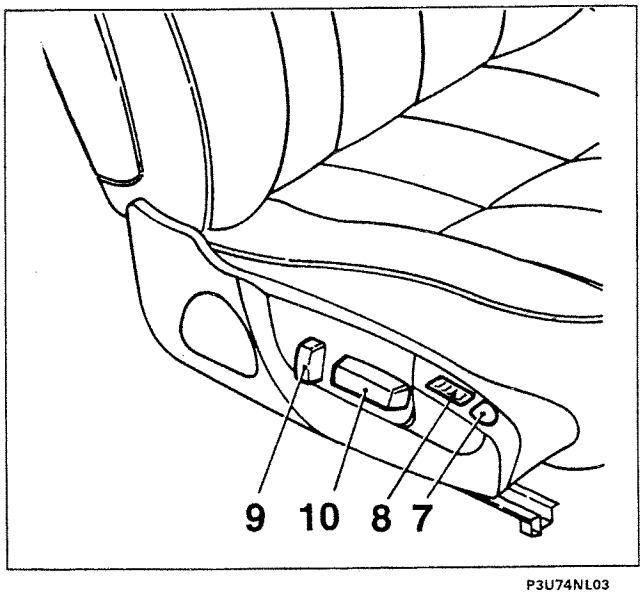

P3U74NL03

1. Seat sliding motor.
2. Front cushion height adjustment motor.
3. Connector for passenger presence sensor (PPD).
4. Rear cushion height adjustment motor.
5. Backrest angle adjustment motor.
6. Head restraint height adjustment motor.
7. Seat heater operating button.
8. Seat position memorizing button.
9. Cushion sliding and height adjustment control.
10. Head restraint height and backrest angle adjustment control.

The adjustments, listed on the previous page, can be carried out using the control panel, on the outside of the seat, which contains the control button for operating the seat heater and the position programming buttons (if fitted).
The motors for the adjustment of the head restraint height and the backrest angle are positioned on the backrest structure, under the cover.
The motors for the cushion adjustments are fixed to a single base, underneath the seat, to which the guides are fixed.

Operation



The seat can only be adjusted with the ignition switched ON.

The following adjustments are made using the knob (8):

a. Adjustment of the seat in a lengthwise direction;
b. Rocker adjustment of the seat (front cushion height);
c. Rocker adjustment of the seat (rear cushion height).

The following adjustments are made using the knob (9):

d. Height adjustment of the head restraint;
e. Backrest angle adjustment.

SYSTEM WITH SIDE BAG

The system for protection against side impacts, known as a Side Bag, available on request, complements the system fitted as standard on the vehicle and affords maximum protection to the occupants of the front seat, shielding the most critical areas of the body, such as the ribs, abdomen and pelvis.
The Side Bag system is managed, together with the two front Air Bags, by the control unit which reads and processes the deceleration and impact information coming from two satellite sensors located in the vehicle side pillars.
The system consists of:
- a 50 pin control unit;
- Side Bag modules inside the front seat backrests on the side facing the outside of the vehicle;

- satellite side deceleration sensors.

CONTROL UNIT FOR AIR BAG SYSTEM, SIDE BAG, PRETENSIONERS AND PASSENGER PRESENCE SENSOR (PPD)

The control unit for the system with Side Bags differs from the one used for the system fitted as standard (driver's Air Bag, passenger Air Bag and passenger presence sensor) through the capacity to process the data sent by the side satellite sensors and the different Pin Out; in effect, the control unit is connected to the system through a 50 pin connector.
As on the system with front Air Bags, the system with Side Bags has a control unit calibrated according to specific activation levels which only ensure operation in the case of impacts where the occupant requires additional protection, distinguishing these situations from those where it is notrequired (low energy side impacts, closing the doors, side impacts not caused by other vehicles, etc.).
The control unit is programmed to deactivate the front Air Bag module, the Side Bag module and the passenger pretensioner if the passenger presence sensor detects that there is no passenger for at least 30 seconds and to reactivate them immediately as soon as the presence of a passenger is detected.
On the Air Bag system with Side Bags the wiring branch is continuously controlled by the control unit whilst the vehicle is in use. If a fault is detected, the red failure warning light is activated and the system behaves like a traditional system with the Air Bags and pretensioners permanently ready for activation.

Copyright by Fiat Auto

55.

Diagram showing connections between control unit and components

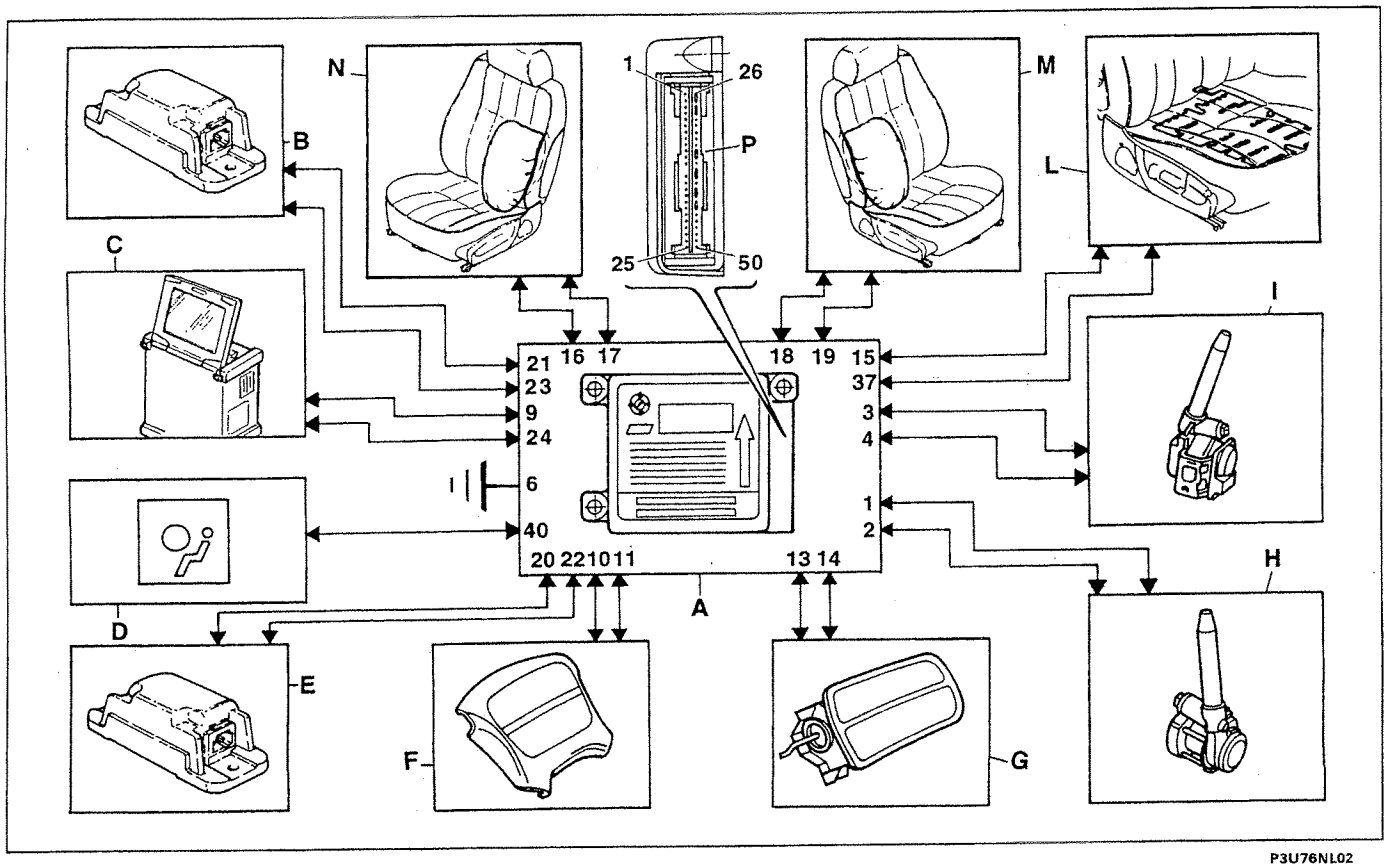

P3U76NL02

Control unit Pin out

1. Driver's pretensioner
2. Driver's pretensioner
3. Passenger pretensioner
4. Passenger pretensioner
5. Supply (+15)
6. Earth
7. Spare
8. Spare
9. Serial interface (K) for fault diagnosis
10. Driver's Air Bag
11. Driver's Air Bag
12. Spare
13. Passenger Air Bag
14. Passenger Air Bag
15. Passenger presence sensor (cathode)
16. Driver's Side Bag
17. Driver's Side Bag
18. Passenger Side Bag
19. Passenger Side Bag
20. Driver's Side Bag sensor
21. Passenger Side Bag sensor
22. Driver's Side Bag sensor supply
23. Passenger Side Bag sensor supply
24. Earth for diagnostic equipment
25. Spare
26. Short circuit
27. Short circuit
28. Short circuit
29. Short circuit
30. Spare
31. Spare
32. Spare
33. Spare
34. Spare
35. Short circuit
36. Short circuit
37. Passenger presence sensor
38. Short circuit
39. Short circuit
40. Failure warning light
41. Short circuit
42. Short circuit
43. Short circuit
44. Short circuit
45. Spare
46. Spare
47. Spare
48. Spare
49. Spare
50. Spare

A. Electronic control unit
B. Driver's satellite sensor
C. Diagnostic equipment
D. Failure warning light
E. Passenger satellite sensor
F. Driver's Air Bag module
G. Passenger Air Bag module
H. Driver's seat belt pretensioner
I. Passenger seat belt pretensioner
L. Passenger presence sensor
M. Passenger Side Bag module
N. Driver's Side Bag module
P. Control unit pin out

SIDE BAG MODULES

The Side Bag modules on the LANCIA k are fitted, using suitable brackets, to the inside of the backrest, on the side facing the outside of the structure. Compared with installation in the door, this solution allows the cushion to always be in an optimum position in relation to the occupant, irrespective of the position of the seat or the size of the occupant.
The Side Bag modules basically consist of:
- a bag with a volume of around 12 litres made from a permeable fabric capable of protecting the outside of the chest and abdomen;
- a metal casing containing a minimal pyrotechnic charge which, activated by an electrical signal, causes the release of the bag inflation gases;
- a plastic cover for the bag, which is extremely light and guarantees the dimensions and aesthetic features of the backrest whilst ensuring the easy release of the bag;
- fixing bracket which secure the module to the seat structure.

Side Bag module

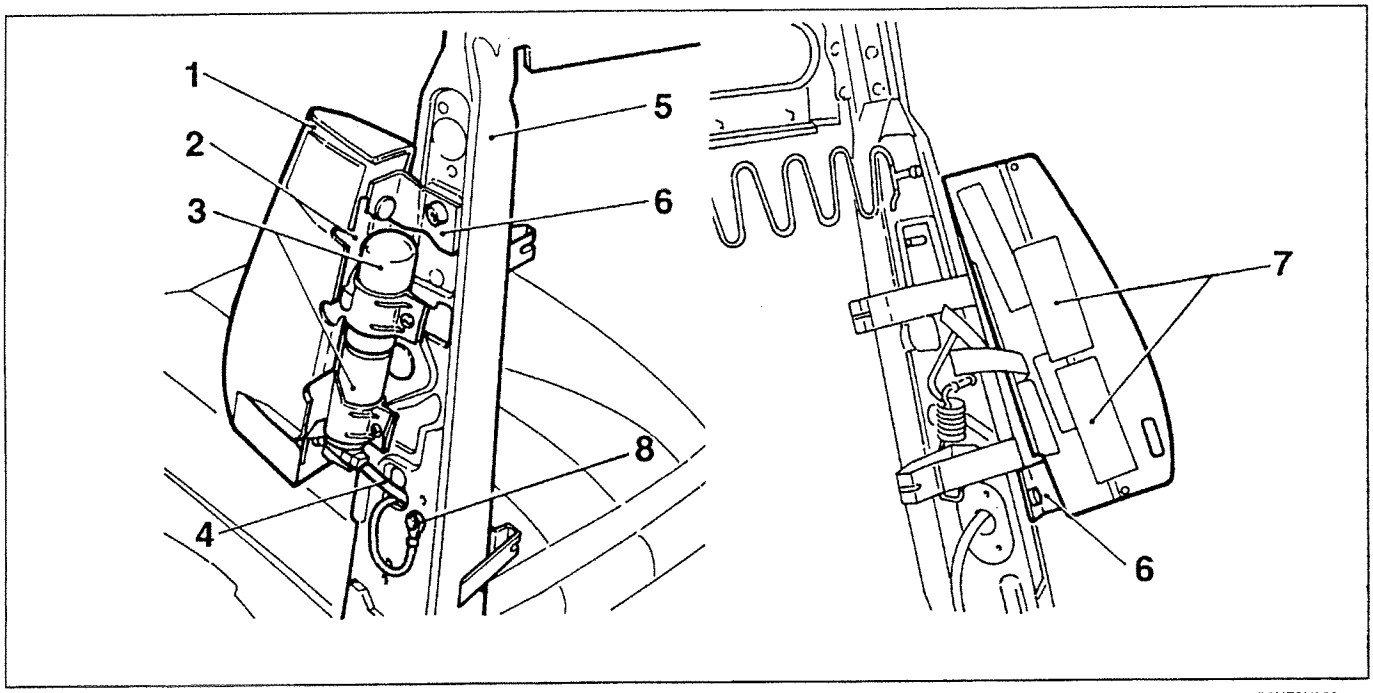

P3U78NL01

1. Plastic cover
2. Cushion
3. Metal casing
4. Electrical activation cable
5. Backrest structure
6. Fixing brackets
7. Warning plates
8. Earth cable

The Side Bag modules are fitted under the backrest cover and do not significantly alter the style and dimensions of the seat.
The set cover has special stitching by the module designed to open to allow the bag to inflate properly.

Copyright by Fiat Auto

55.

The use of any type of seat covers which have not been specifically designed for this type of seat is ABSOLUTELY PROHIBITED. In the case of replacing, take great care to ensure that the words SIDE BAG are on the same side of the backrest as the Side Bag module.

Before disconnecting the connections for the seat and the Air Bag system (cables with yellow outer casing), both the battery leads must be disconnected, insulated through careful taping and it is necessary to WAIT AT LEAST 10 MINUTES.
Each time operations are carried out to the Air Bag system, at the end of the procedure it is VITAL to check the operation of the actual system using the special diagnostic equipment.

There are identification and warning plates on the Side Bag module cover with instructions which MUST be followed each time the module is handled.

If the module is replaced, the removeable label (1), on the cover of the new module, must be removed and stuck on the front of the seat structure at the points shown in the diagram below so that it is legible with the seat fitted. Also make a note of the serial number in the special register.
If the seat structure has to be replaced and the Side Bag module transferred, the above mentioned label has to be transferred from the old structure to the new one.

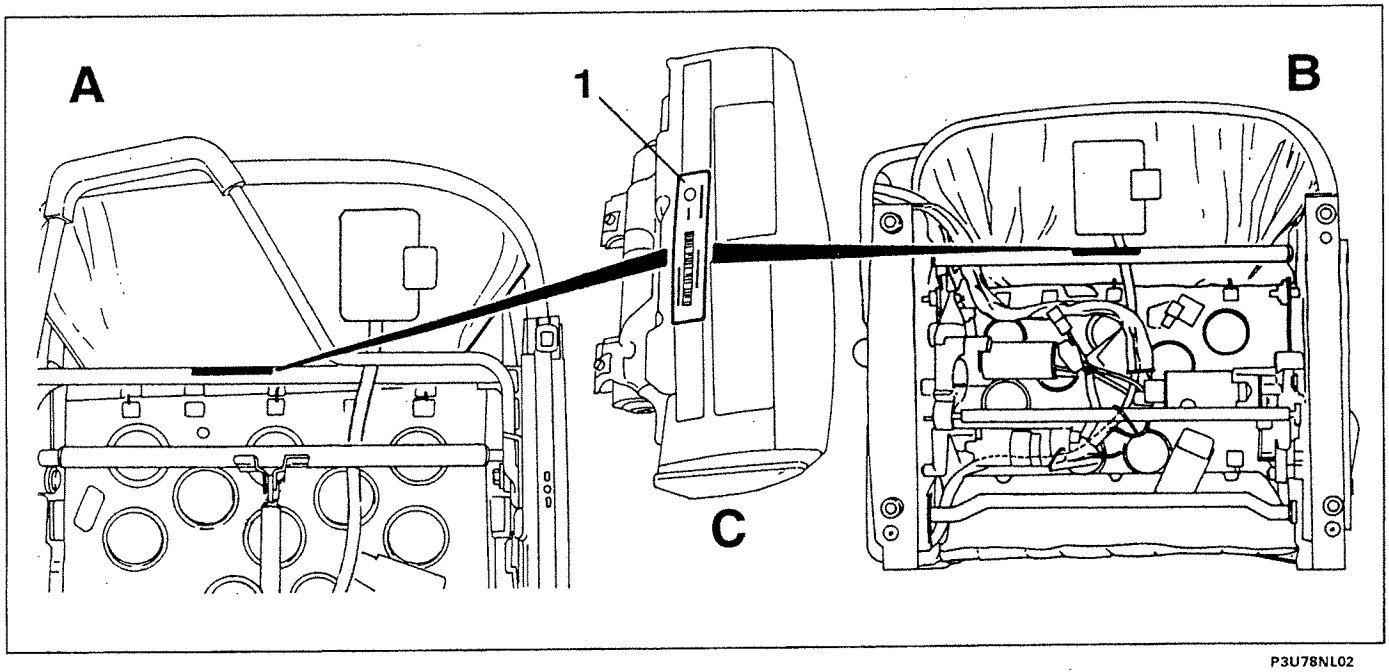

P3U78NL02

A. Manually adjusted passenger seat
B. Passenger seat with motorized adjustment
C. Side Bag module
1. Removeable self-adhesive plate

The points for connecting the Side Bag module to the Air Bag system and the passenger presence sensor (cables with yellow outer casing) are located at the base of the seat at the front inside a protective casing.
The connection for the Side Bag module is secured to the casing cover, whilst the connection for the passenger presence sensor is secured to the base of the seat at the point illustrated in the diagram below.
If checks have to be carried out on the system or the seat has to be removed, to gain access to the Side Bag module located inside the casing, it is necessary to open the casing cover acting on the retaining springs.

Seat with Side Bag and passenger presence sensor

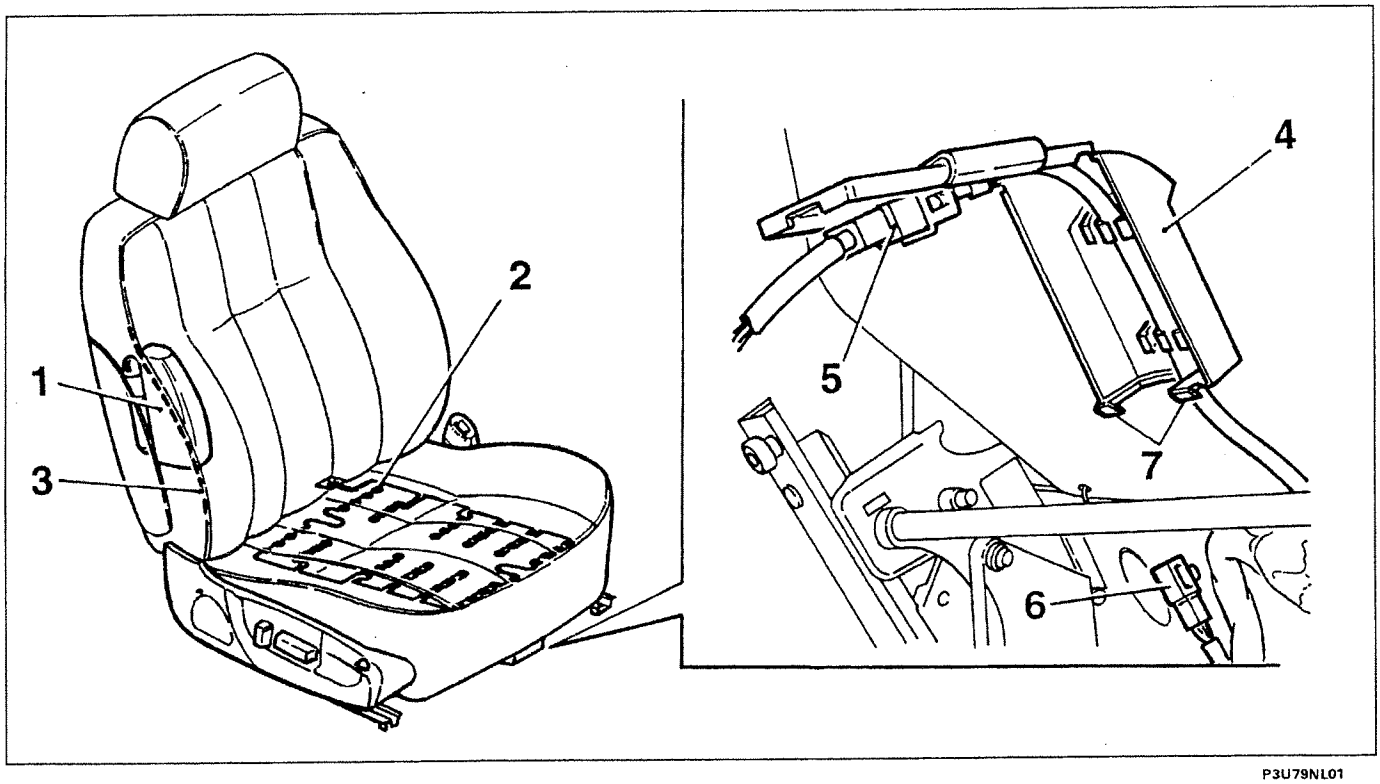

P3U79NL01

1. Side Bag module
2. Passenger presence sensor "PPD"
3. Special stitching
4. Connector protective casing
5. Side Bag module connector
6. Passenger presence sensor connector
7. Securing springs

SATELLITE DECELERATION SENSORS

The satellite deceleration sensors are fixed to the vehicle centre pillars and contain an accelerometer capable of detecting the acceleration which occurs during a side impact.
If the impact exceeds a certain degree of severity, the information is transferred from the sensor involved to the main Air Bag system control unit which compares the information received with that from a second accelerometer, which it contains, which ensures the safety function (safing).
If the accelerometric information, detected by the satellite sensor and the control unit concur, then the main control unit operates the Side Bag module for the side affected by the impact.
If the impact is on the passenger side, the main control unit compares the signal coming from the satellite sensor with that coming from the passenger presence sensor to determine whether or not to open the Side Bag module.

Copyright by Fiat Auto

55.

Location of satellite deceleration sensors

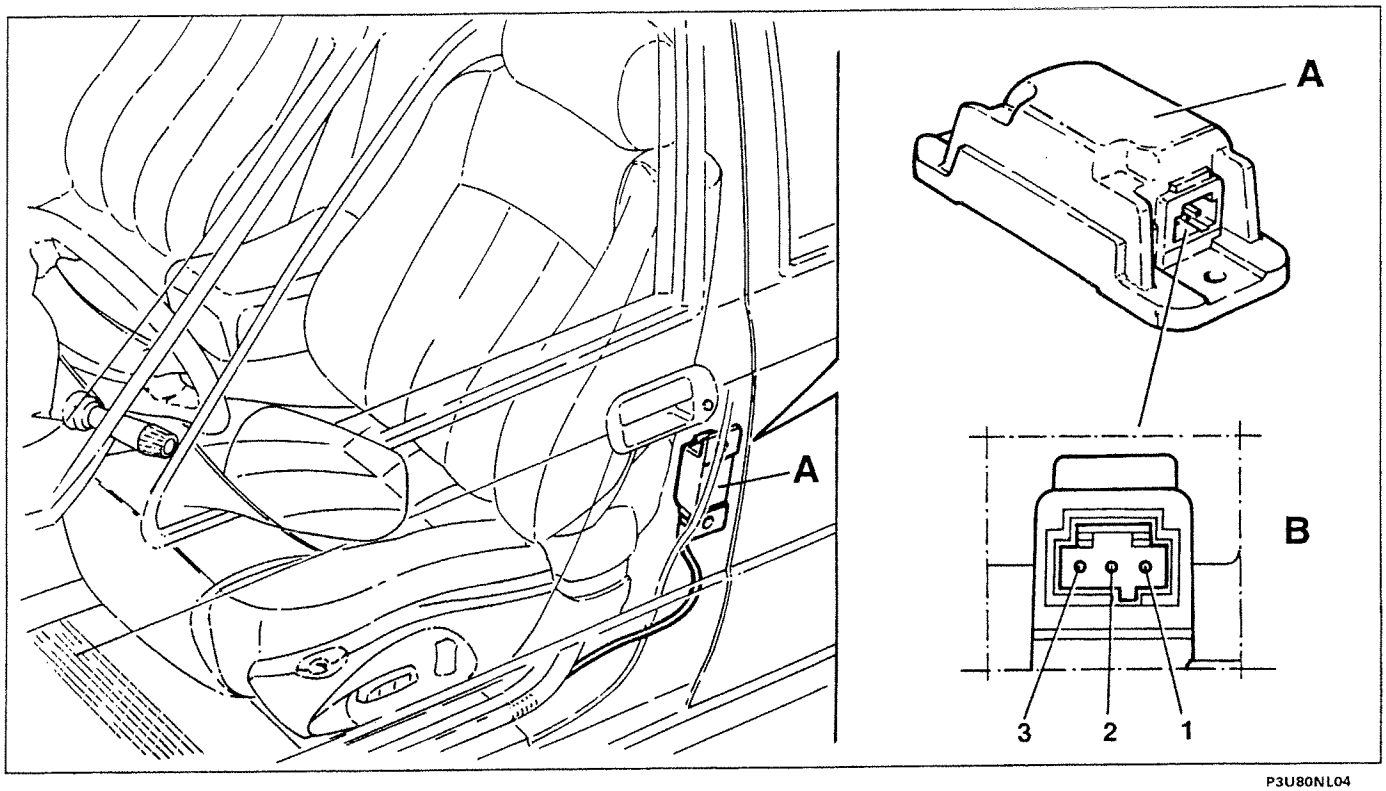

A. Satellite deceleration sensor

B. Pin out
1. Earth
2. Supply
3. Signal

SAFETY INSTRUCTIONS TO BE FOLLOWED DURING OPERATIONS ON VEHICLES EQUIPPED WITH AIR BAG/SIDE BAG SYSTEMS

The following regulations MUST BE FOLLOWED when carrying out any operation on vehicles equipped with Air Bag/Side Bag systems.

The system components must ONLY be dismantled and refitted by authorized, trained personnel, bearing in mind that the components must be handled with care.
The transportation and storage of these components is governed by the handling procedures described in Section 55 - Electrical equipment of the "LANCIA k" (2nd volume) Service Manual.

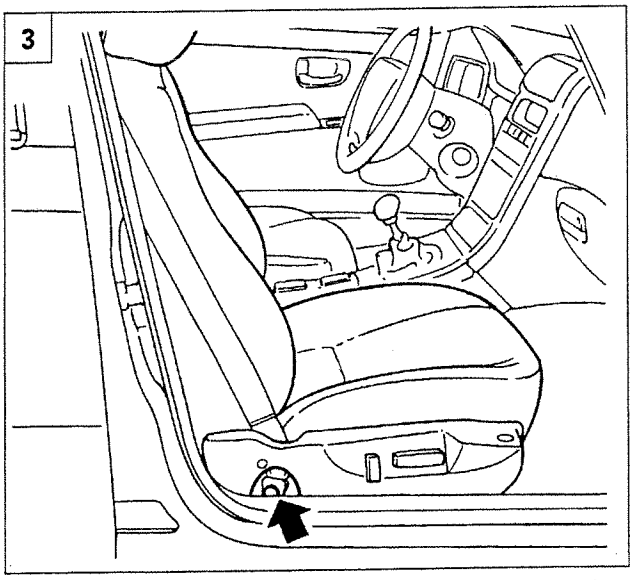

P3U80NL01

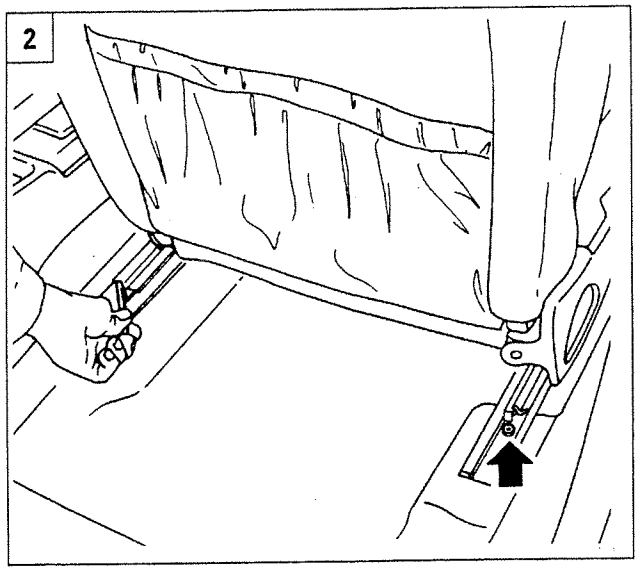

P3U80NL02

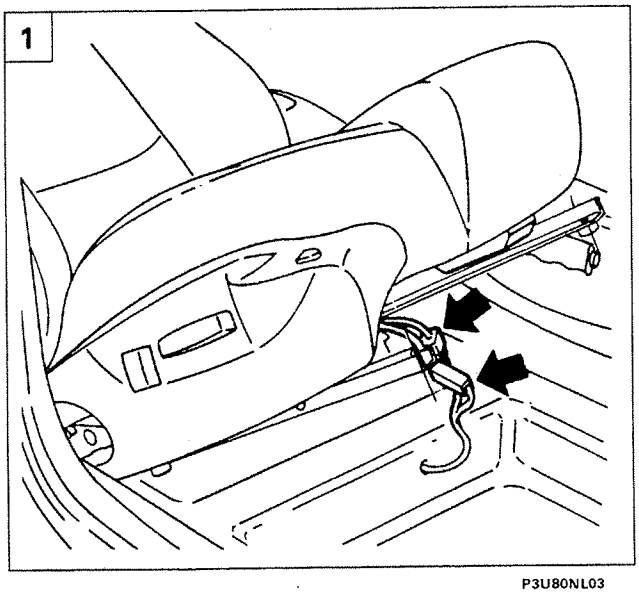

P3U80NL03

REMOVING-REFITTING FRONT SEAT WITH PASSENGER PRESENCE SENSOR (PPD) AND SIDE BAG

NOTE *The procedure, unless otherwise specified, is for electrically operated seats (motorized adjustment).*

Place the seat in the maximum height position and lower the head restraint.

Work carefully, using the recommended tools, to avoid damaging the components.

Removing

1. Remove the shield on the side cover and undo the bolt fixing the seat belt to the seat.
2. Move the seat forwards into the end of travel position and undo the bolts fixing the guides to the floor.
3. Move the seat backwards into the end of travel position and undo the bolts fixing the guides to the floor. Fold the seat backwards to gain access to the electrical connections.

The operations of handling and checking the seats must be carried out following the safety instructions given below to the letter.
Before disconnecting the connections for the Air Bag system (cables with yellow outer casing), both the battery leads must be disconnected, insulated carefully with tape and it is necessary to WAIT FOR 10 MINUTES.
Each time operations are carried out to the Air Bag system, at the end of the procedure, it is necessary to check the operation using the special diagnostic equipment.

Copyright by Fiat Auto

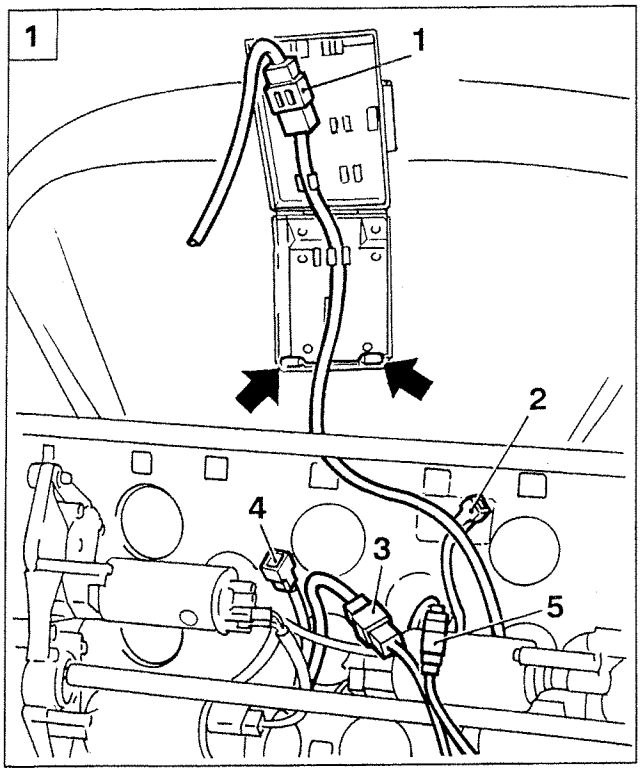

P3U82NL05

1. Act on the retaining springs to open the protective casing cover and disconnect the connections for the Side Bag module (1) and the passenger presence sensor (2), the supply connections for the operating motors (3), the seat belt fastened sensor (4) and the heater pad (5), if fitted.

Remove the seat from the vehicle.

If the seat sliding motor fails, as there is no access to the bolts fixing the guides, manually move the seat following the instructions given below.

2. Insert tool 1870719000 at point A of the motor (1), turn the tool and move the seat along the guides to gain access to the fixing bolts. Carry out the same operations if one of the seat lifting motors (2) and (3) fails.

Refitting

3. Position the seat in the vehicle, restore the connections and close the protective casing cover.

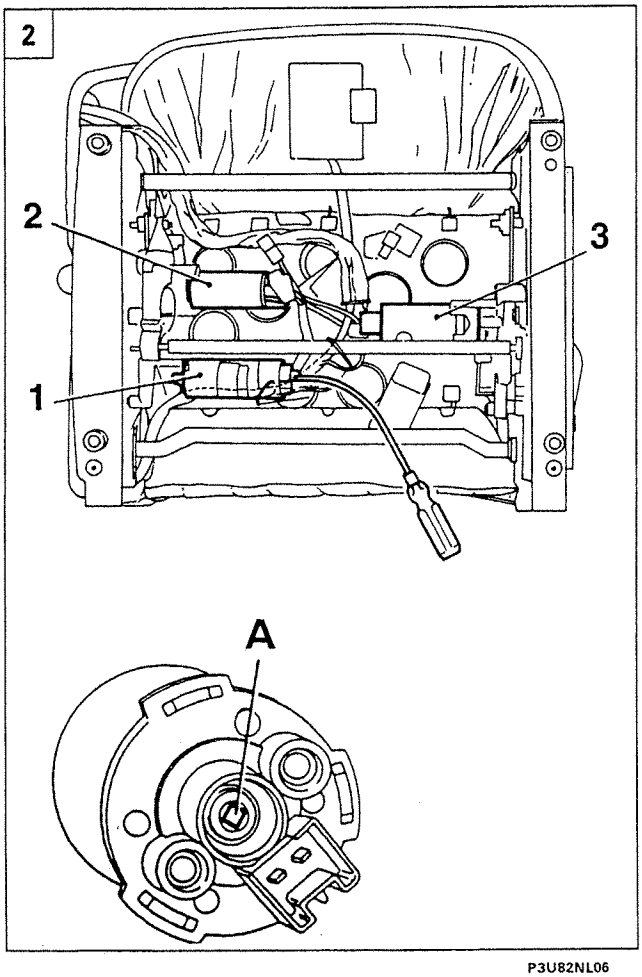

P3U82NL06

Tighten the seat bolts, following the diagram illustrated below:

A. Right rear fixing bolt.
B. Left rear fixing bolt.
C. Right front fixing bolt.
D. Left front fixing bolt.

NOTE *Several movements must be carried out to allow the guides on manually adjusted seats to bed in.*

Tighten the fixing bolts to the recommended torque of 2.5 daNm.

Each time operations are carried out on the Air Bag system the operation of the system MUST be checked using the diagnostic equipment.

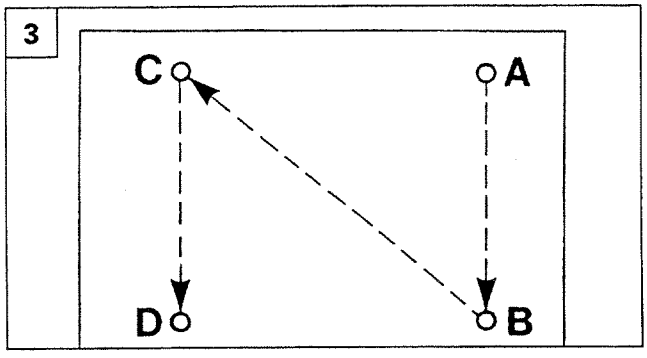

P3U81NL03

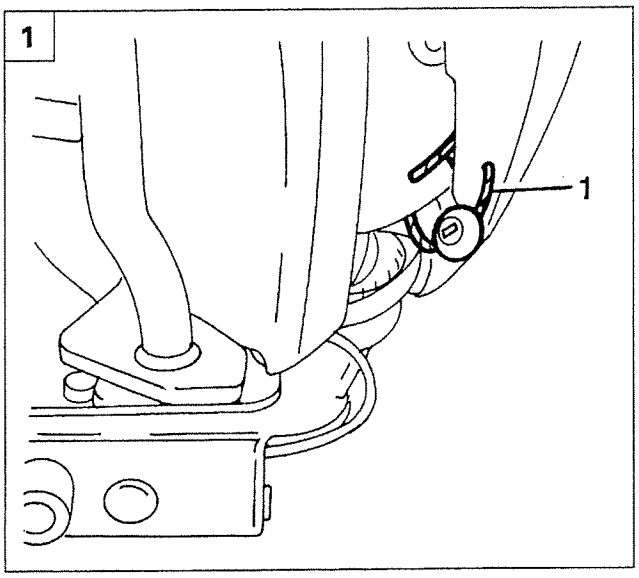

P3U82NL02

DISMANTLING/REFITTING FRONT SEAT WITH PASSENGER PRESENCE SENSOR (PPD) AND SIDE BAG

Removing-refitting rear backrest cover

1. Cut and remove the warranty seal (1).

The seal guarantees the condition of the Side Bag system. The moment the seal is removed (for any reason) the manufacturer's warranty is no longer valid.

2. Undo the fixing bolts (2) and remove the rear backrest cover.

To refit, carefully fit the rear backrest cover in its housing to avoid damage.

When refitting, renew the original Fiat warranty seal.

Removing-refitting head restraint

Remove the rear backrest cover following the instructions given above.

3. Remove the edge of the cover along the section shown in the diagram.
4. Lift up the cover to gain access to the retaining springs for the head restraint rods and remove them as illustrated in the diagram. Then remove the head restraint.

When refitting, make sure that the retaining springs are correctly positioned on the rods. Restore the edge without making creases in the backrest cover.

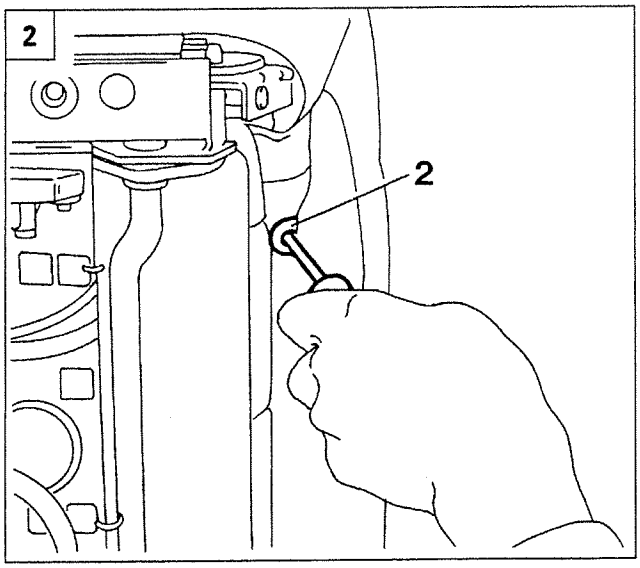

P3U82NL03

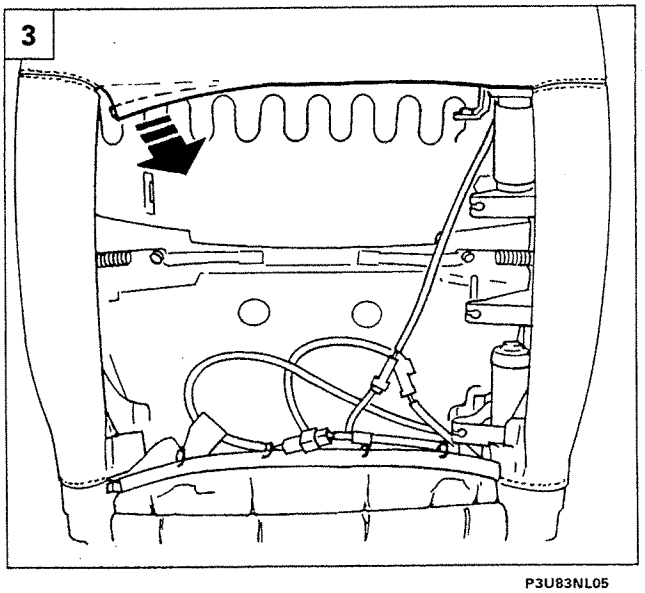

P3U83NL05

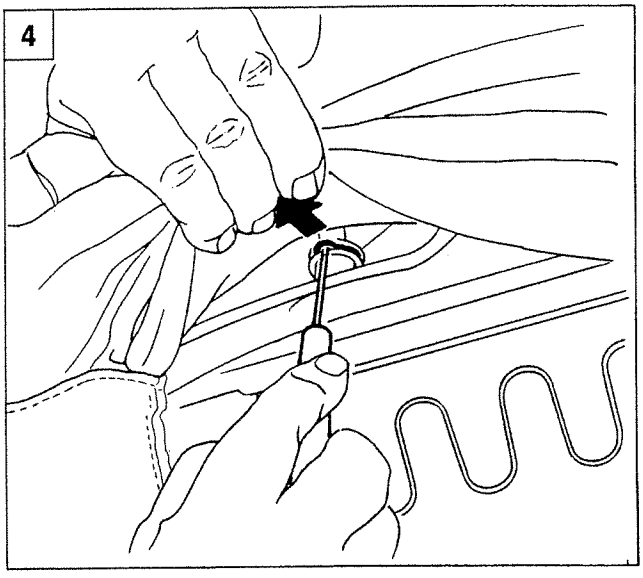

P3U83NL06

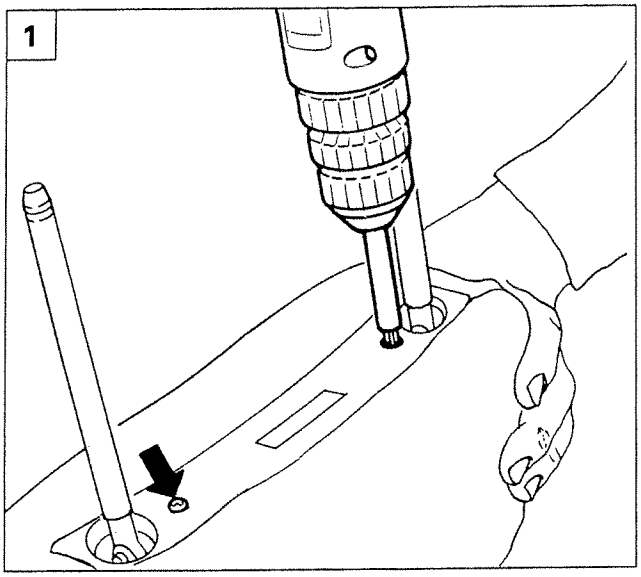

P3U84NL05

Removing-refitting cover and dismantling head restraint

1. Undo the bolts fixing the trim retaining the cover.

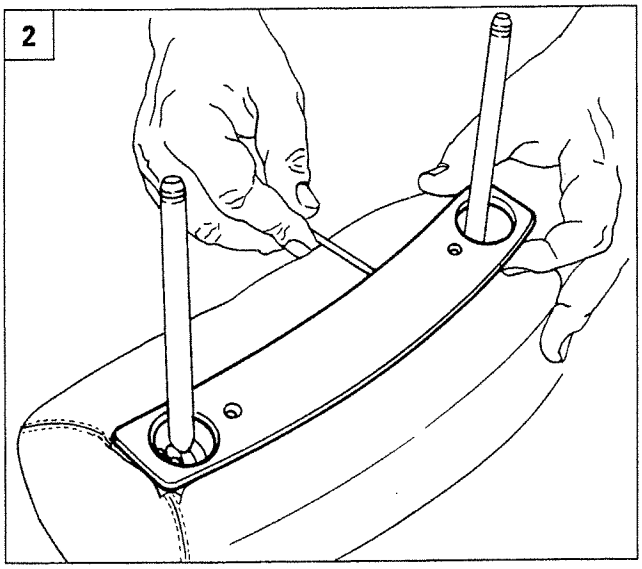

P3U84NL06

2. Lift up the trim and remove it from the head restraint.
3. Remove the securing clips from the head restraint cover.
4. Remove the cover from the head restraint.

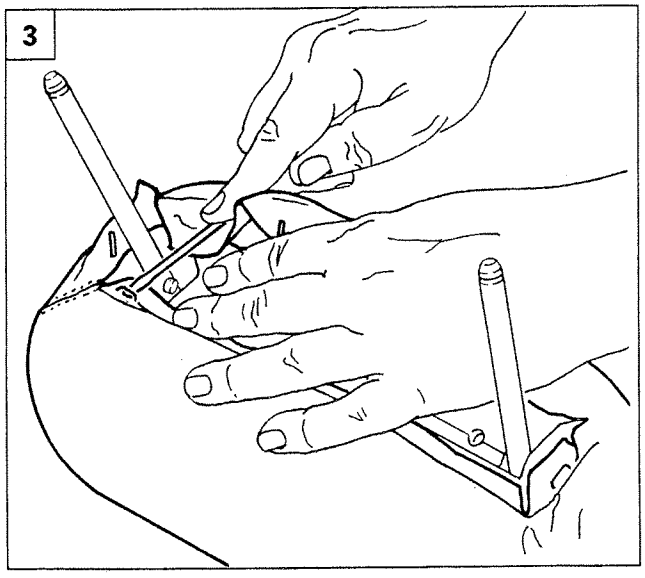

P3U84NL07

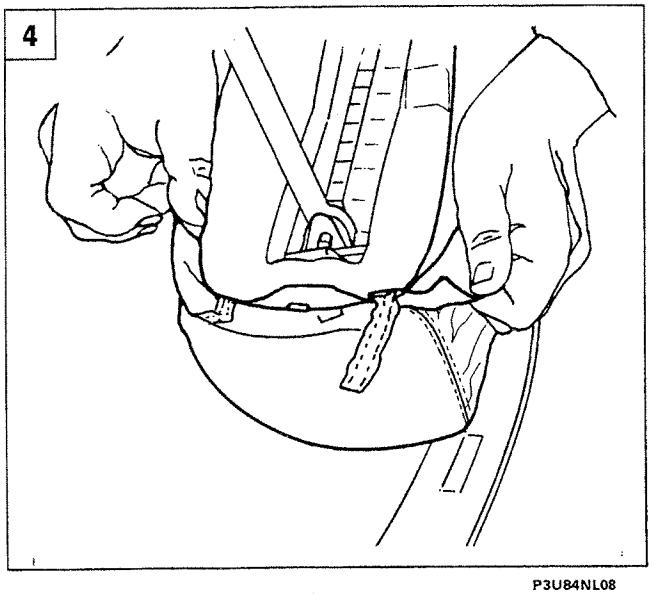

P3U84NL08

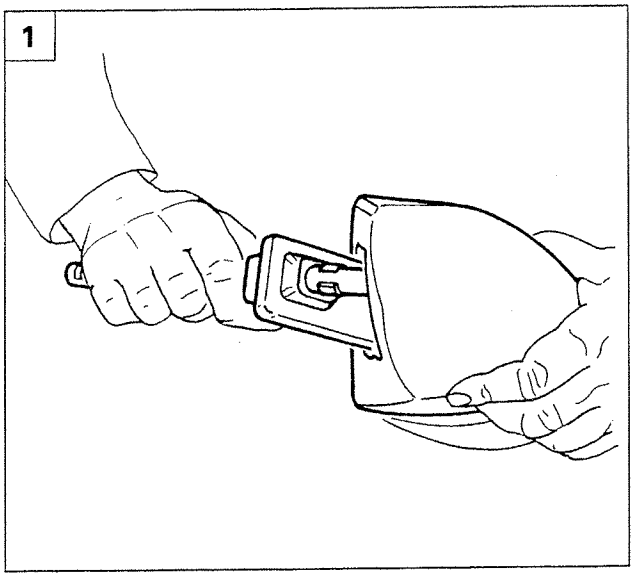

P3U85NL05

1. Separate the upholstery from the structure of the head restraint.

To refit, repeat the operations carried out for the removal in the reverse order taking care to position the clips in such a way that there are no creases in the cover.

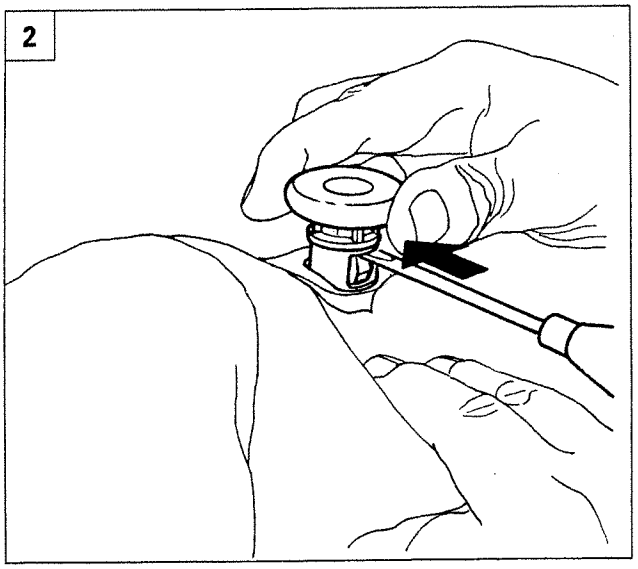

P3U85NL06

Removing-refitting head restraint bushes

2. Press the backrest cover around the bush to gain access to the retaining springs. Press the springs and remove the bush from the housing.
3. Act on the points shown to be able to remove the bushes (in the interest of greater clarity, the structure of the backrest with the cover removed is illustrated).
4. When refitting, take care that the bushes are correctly positioned with the reference tooth in the slots in the seats as illustrated in the diagram.

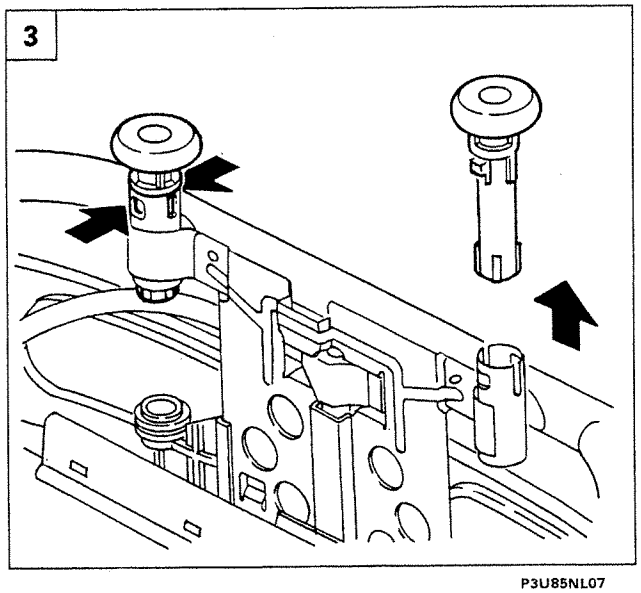

P3U85NL07

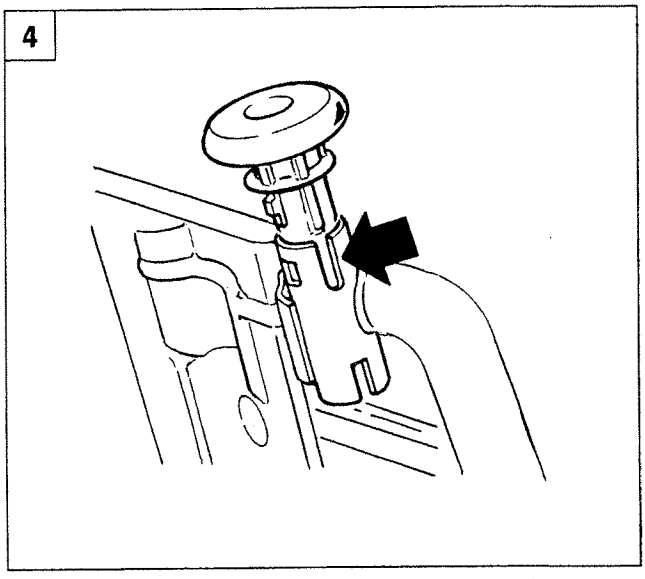

P3U85NL08

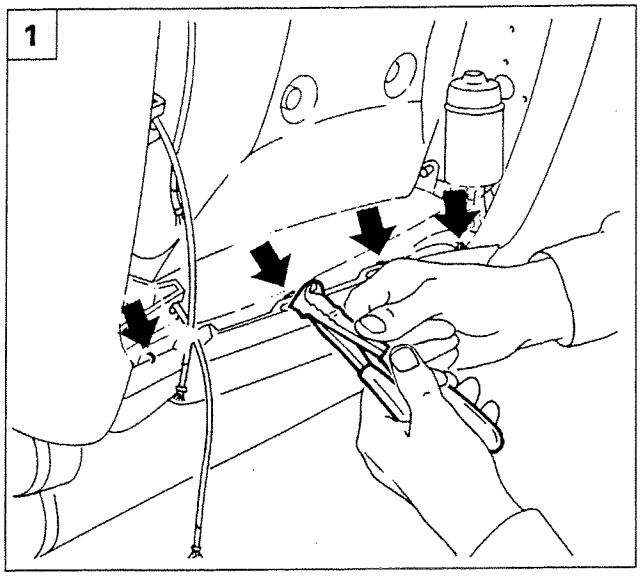

P3U83NL02

Removing-refitting backrest cover

Remove the rear backrest panel, following the procedure described on the previous pages.

1. Remove the tensioning clips, at the base of the backrest at the points illustrated.

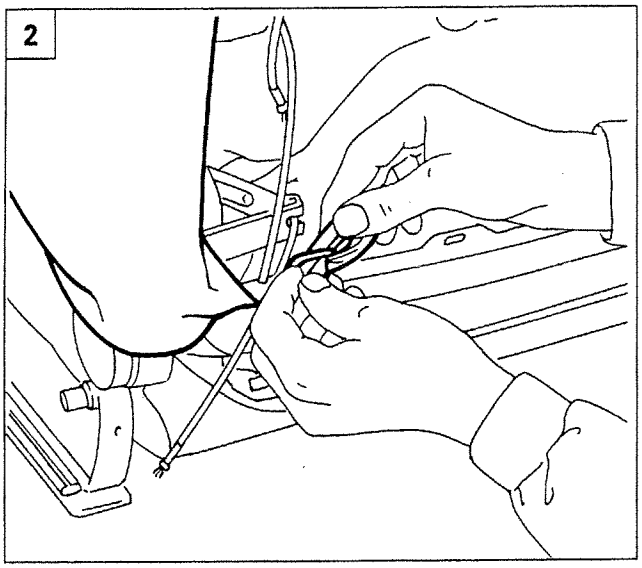

P3U83NL03

2. Release the rods for the cover from the slots in the base of the backrest.
3. Remove the retaining rod (1).
4. Remove the edges of the cover from the profiles on the backrest.

Remove the head restraint following the procedure described on the previous pages.

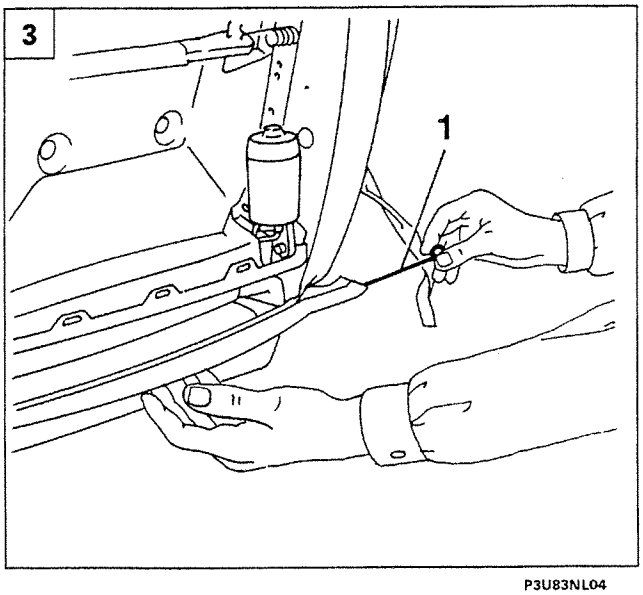

P3U83NL04

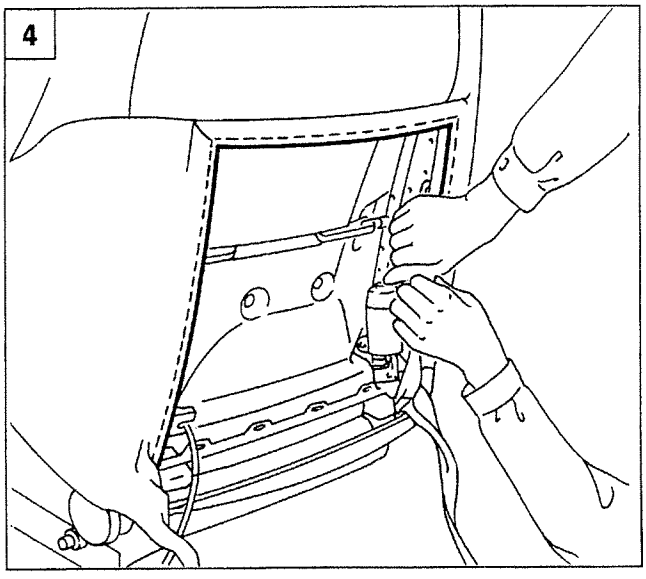

P3U84NL01

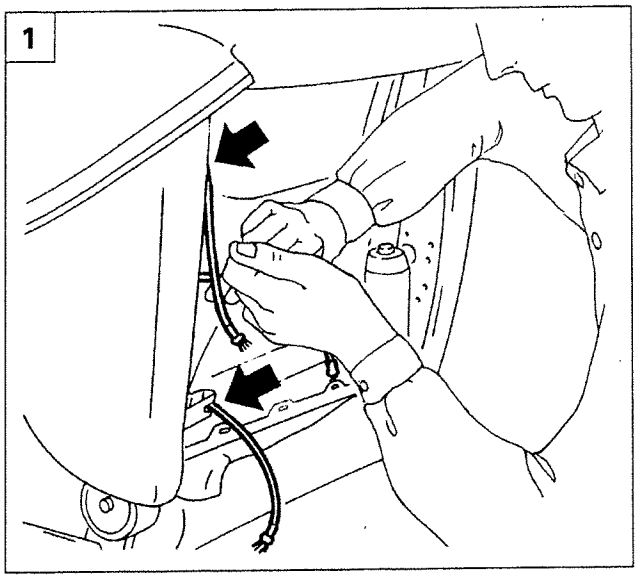

P3U84NL02

1. Release the cover reaction rods, on the side of the Side Bag, pulling carefully.
2. Working carefully, remove the springs for the lumbar rod, then remove the cover, complete with upholstery, from the back-rest, taking care not to damage the Side Bag module.
3. Remove the clips securing the cover to the upholstery, located at the points shown in the diagram, then remove the cover from the actual upholstery.

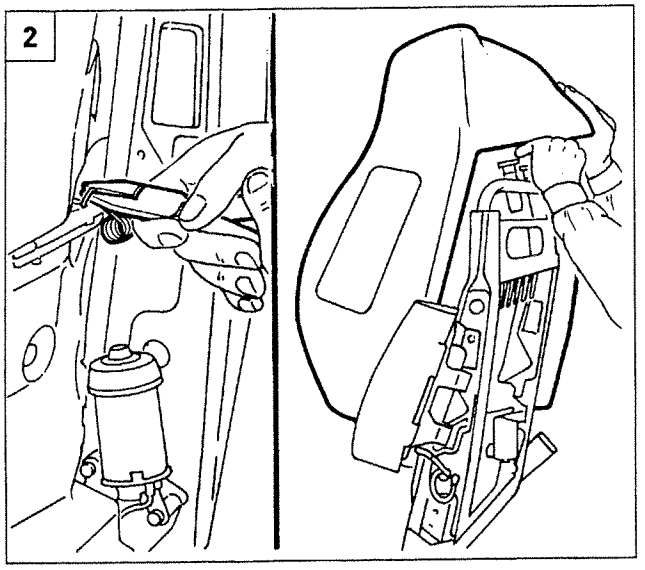

P3U85NL01

NEVER REPAIR COVERS, only use new covers, checking that the three reaction rods are positioned as illustrated in the diagram; also check that the words SIDE BAGare on the same side as the rods which MUST be on the same side as the Side Bag module.

4. When refitting, place the cover on the upholstery, checking that the words SIDE BAG are on the side of the module and that the three rods are positioned as illustrated in the diagram.

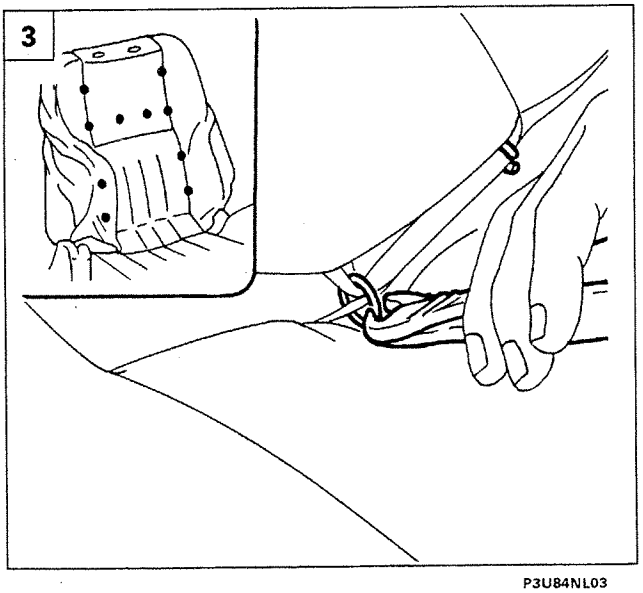

P3U84NL03

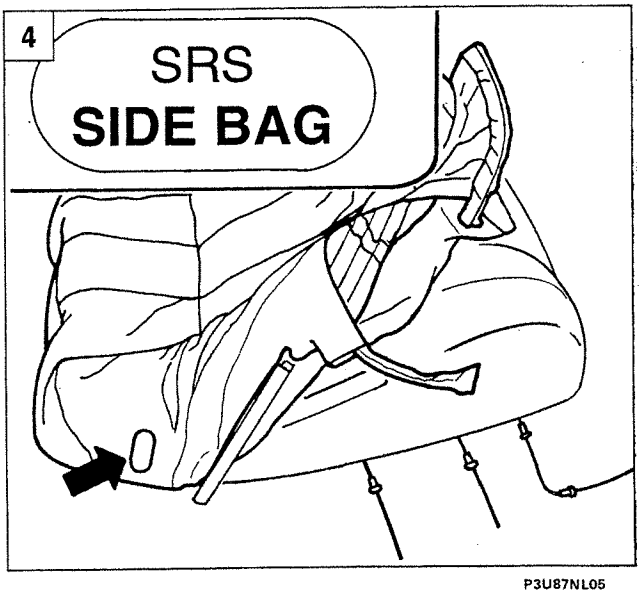

P3U87NL05

55.

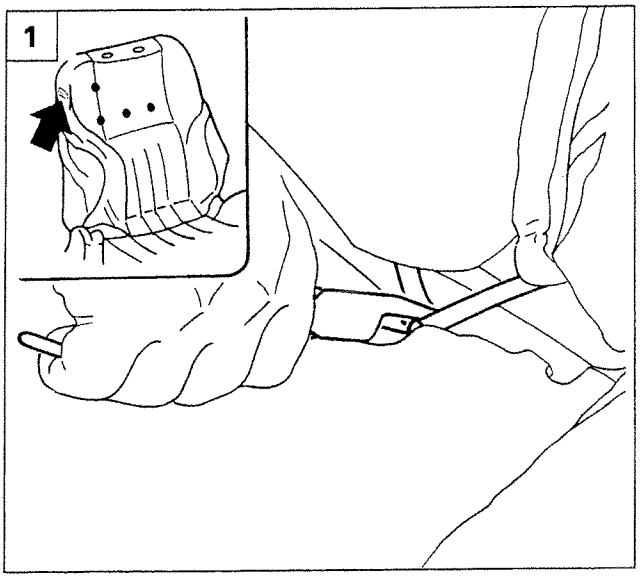

P3U88NL05

1. Secure the cover on the upholstery using the two centre clips and the two clips on the side with the words SIDE BAG as illustrated in the diagram.
2. Pass the three rods through the slits in the upholstery near the housing for the Side Bag module. Renew the remaining clips, positioned at the points illustrated previously, on the side of the backrest opposite the Side Bag module.
3. Restore the upholstery, complete with cover, on the backrest, taking great care to position the upholstery correctly around the Side Bag module.
4. Refit the three reaction rods for the cover in the order shown, securing them as illustrated in the diagram. Cut the excess part of the rod leaving about 10 cm for any future operations.

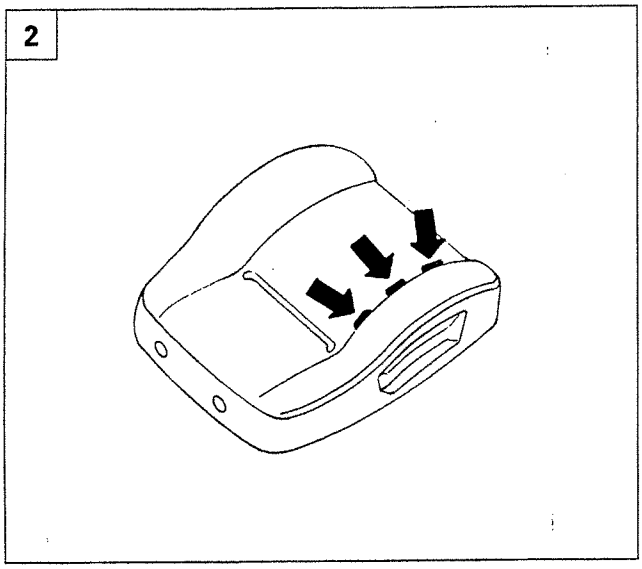

P3U88NL06

Reattach the cover rods taking great care to ensure the correct position as shown in the diagram.
Incorrect positioning will mean that the operation of the Side Bag is ineffective.

Proceed with the refitting procedure, reversing the order of the operations carried out for the removal, taking care not to make creases or folds in the cover.

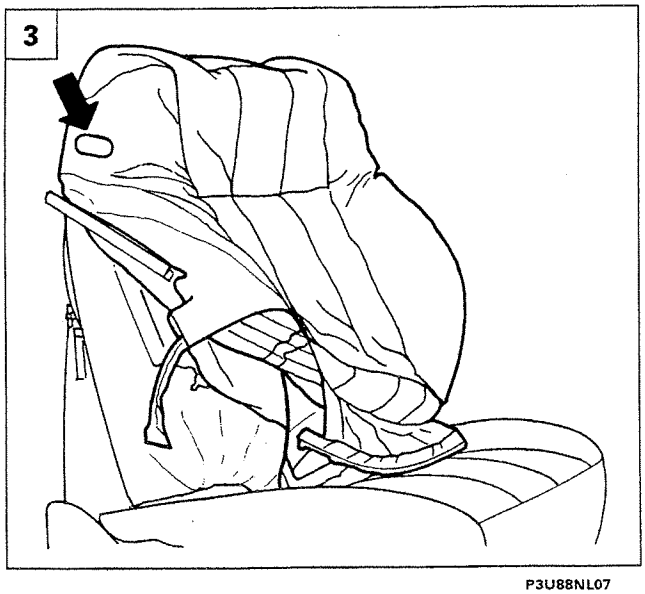

P3U88NL07

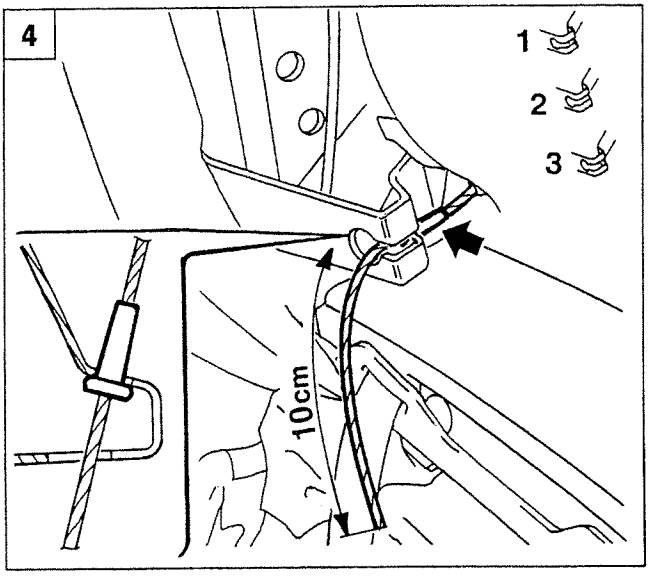

P3U88NL08

1

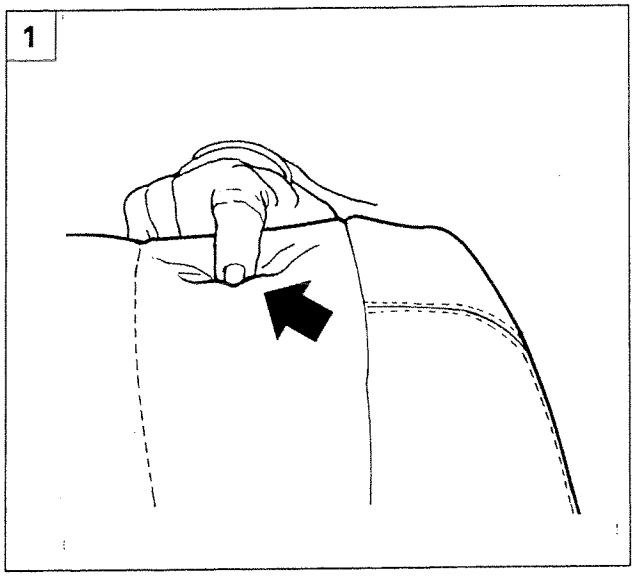

P3U89NL04

Replacing the cover

If the backrest cover is being replaced, after having carried out the refitting procedure, with the exception of refitting the head restraint, following the instructions given below.

1. Locate the position of the head restraint bush housings.

2

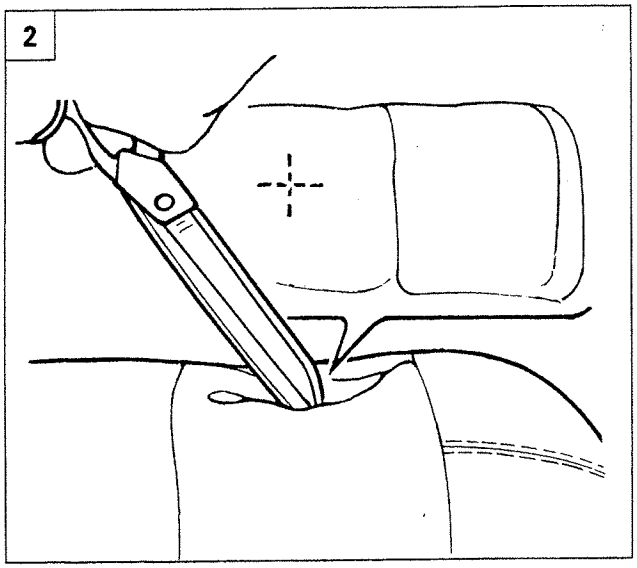

P3U89NL05

2. Make cuts corresponding to the housings using scissors.
3. Press the cover on the area surrounding the housings leaving the upper edge of the actual housings uncovered.
4. Fit the bushes in their housings, taking care to ensure that they are correctly positioned with the reference tooth fitted in the slot in the housings; once fitted, make sure that the bushes are correctly attached.
   If the bushes can be reused, slightly raise the retaining springs to ensure better attachment.

3

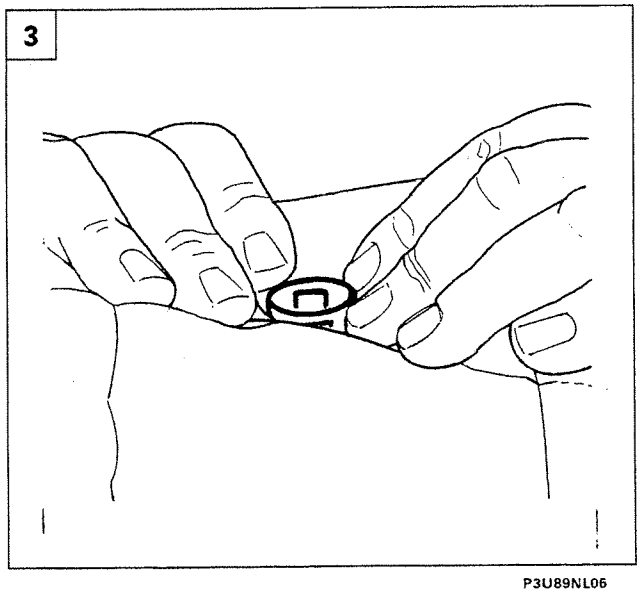

P3U89NL06

4

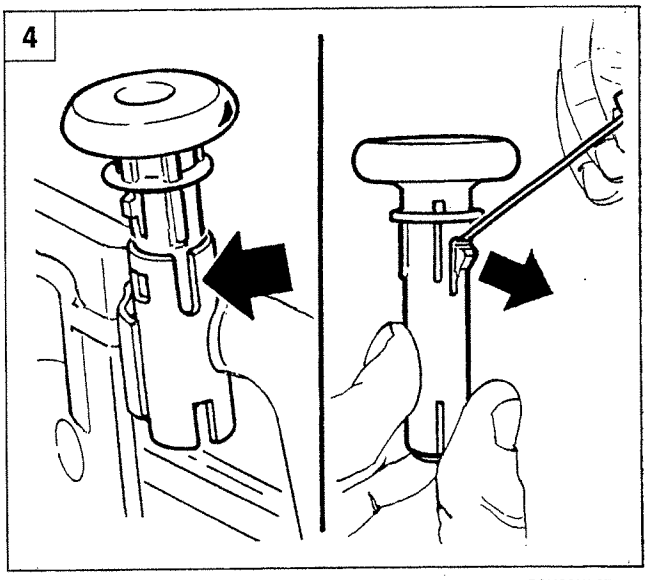

P3U89NL07

55.

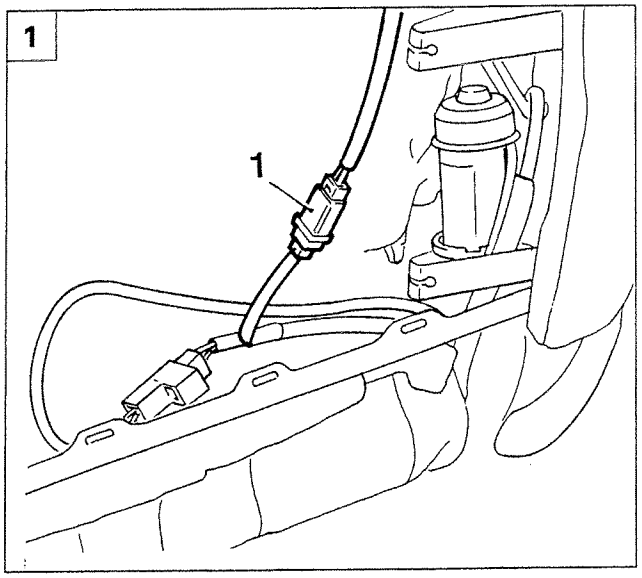

P3U90NL05

Removing-refitting head restraint adjustment device

Remove the cover for the rear backrest and head restraint following the procedures described on the previous pages.

1. Disconnect the supply connection (1) for the operating motor.

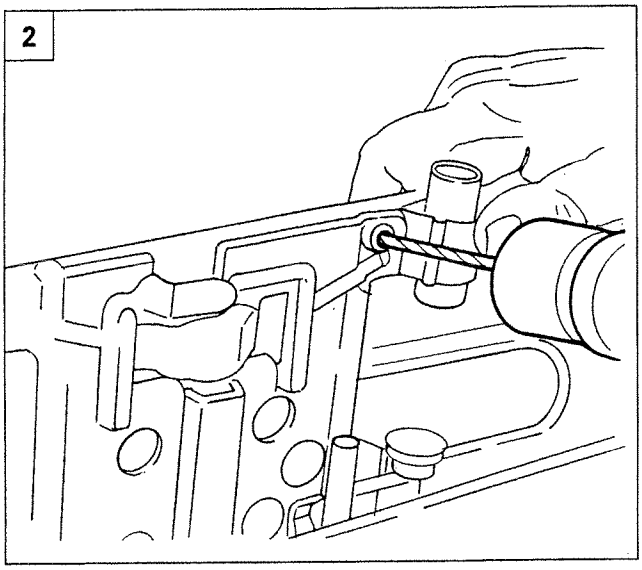

P3U90NL06

2. Remove the two rivets fixing the device using a 5 mm diameter drift.
3. Undo the two bolts fixing the operating motor and remove the complete head restraint adjustment device from the backrest.
4. To refit, restore the device in position and fix it using the two 4.8 mm diameter rivets. Continue the procedure, reversing the order of the operations carried out for the removal.

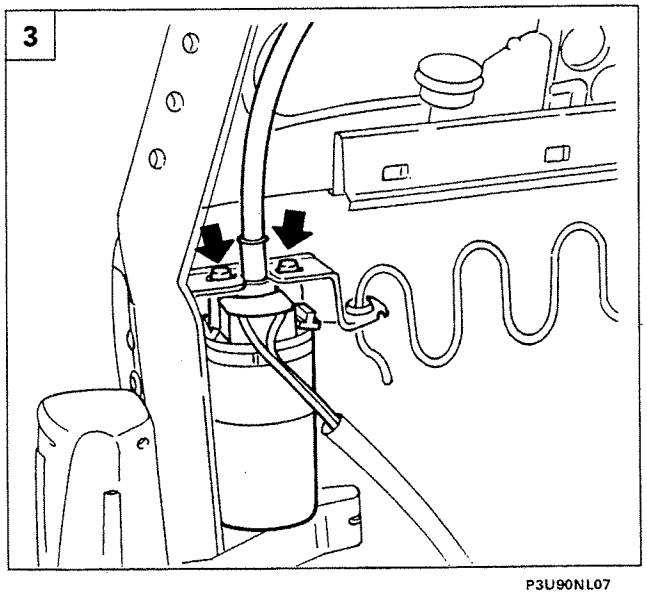

P3U90NL07

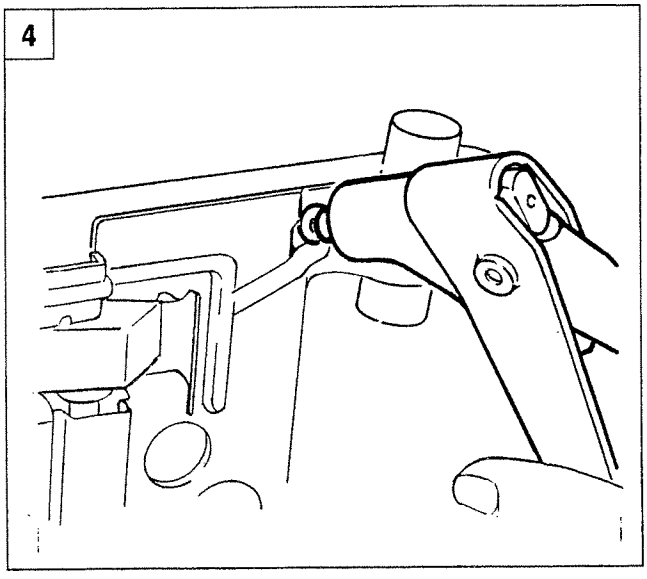

P3U90NL08

1

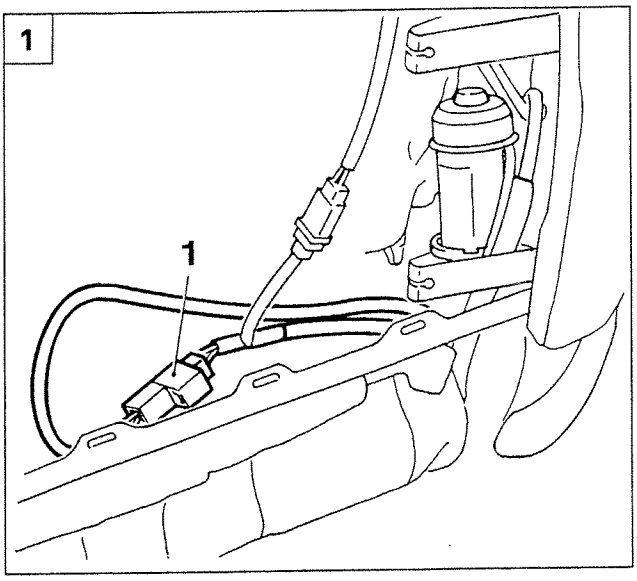

P3U91NL04

Removing-refitting backrest angle adjustment motor

To facilitate the removal operations, partly remove the cover, complete with upholstery, without removing the head restraint, following the instructions described on the previous pages.

1. Disconnect the electrical connection (1) supplying the operating motor.
2. Lift up the backrest cover to free the working area.
3. Undo the fixing bolts and remove the motor upwards (for the right seat, pass the motor between the reaction rod supports).
4. Check the condition of the motor, provide a temporary supply and check the operation. Position the motor, complete with wiring, checking that openings (A) are coaxial in relation to openings (A1) and that the pin (B) on the motor ignition coilis correctly positioned in the frame housing (B1).

2

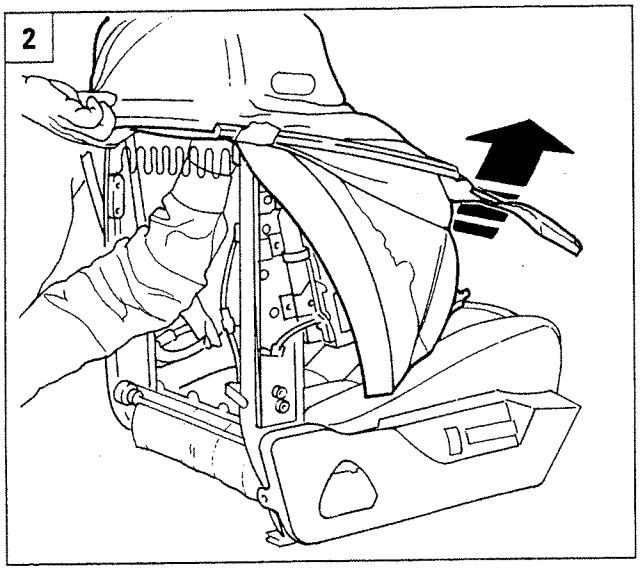

P3U91NL05

To refit, carry out the operations in the reverse order of the removal.

When refitting the right seat, take great care not to compress or damage the supply cable (A) for the Side Bag module (cable with yellow outer casing).

3

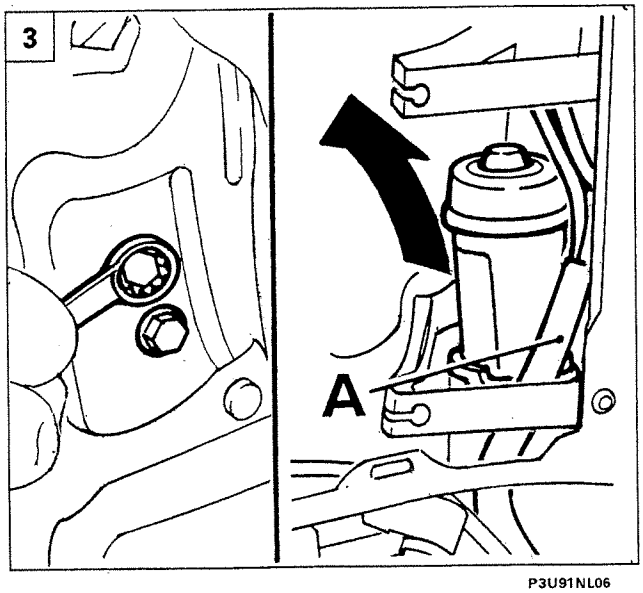

P3U91NL06

4

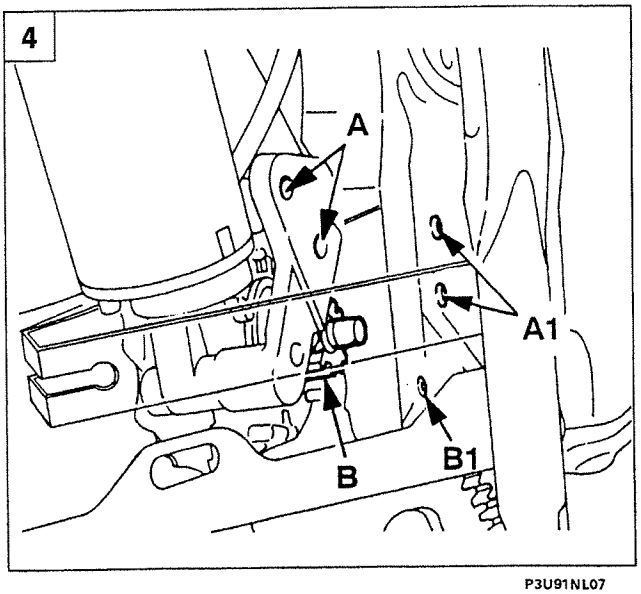

P3U91NL07

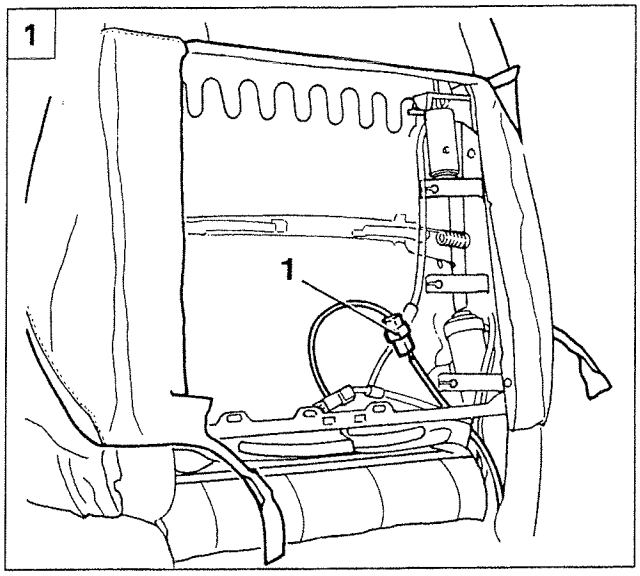

P3U92NL04

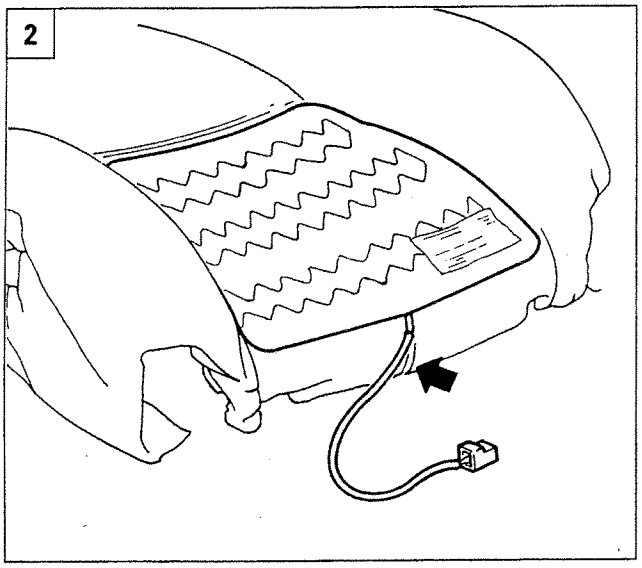

P3U92NL05

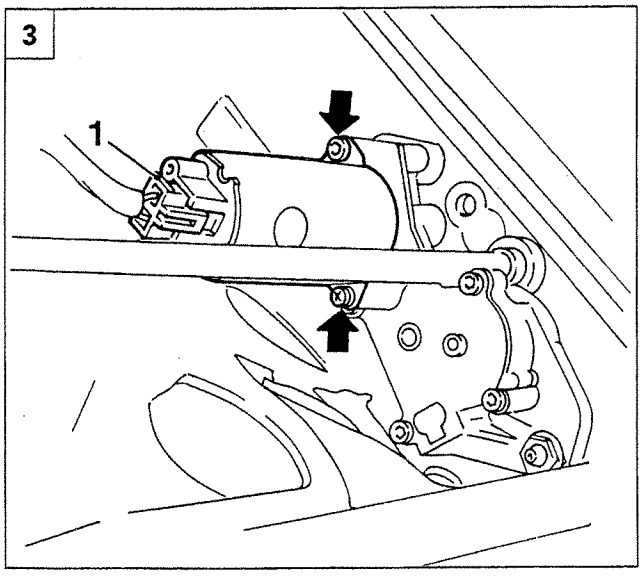

P3U92NL06

Removing-refitting backrest heater pad

Remove the rear backrest cover, partly remove the backrest cover without removing the head restraint following the procedure described on the previous pages, only releasing the part which covers the heater pad.

1. Disconnect the electrical supply connection (1), remove the cable passing it in front of the backrest upholstery and remove the heater pad.
2. Position the heater pad on the backrest, as illustrated in the diagram.
   Pass the cable behind the upholstery, through the slot shown at the base of the backrest (in the interest of greater clarity the diagram illustrates the backrest with the upholstery removed).
   Restore the backrest cover, following the procedure described on the previous pages.

Removing-refitting operating motors at the base of the seat

NOTE *For greater clarity only one motor is illustrated in the diagram; the procedure described is also valid for the remaining motors.*

3. Disconnect the electrical supply connection (1), undo the bolts shown and remove the motor from the base.

NOTE *Repeat the procedure in the reverse order to the removal, tightening the fixing bolts to a torque of 0.7 daNm.*

1

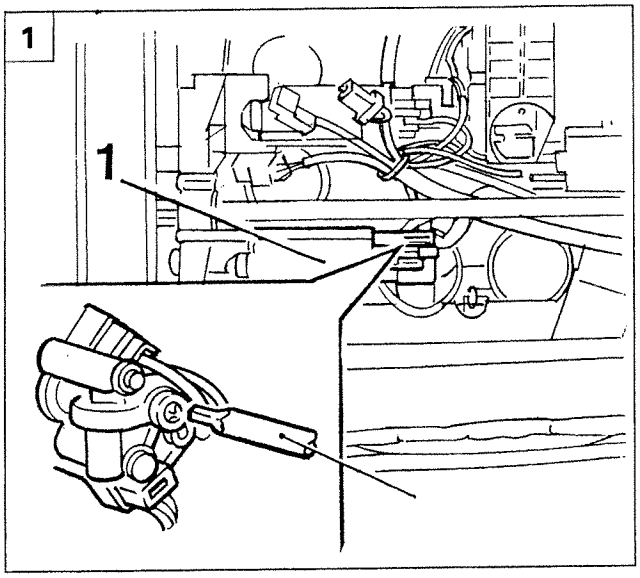

P3U93NL04

2

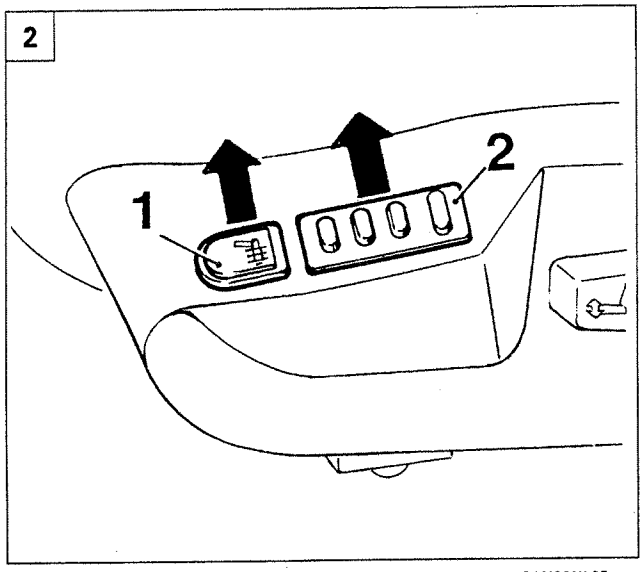

P3U93NL05

3

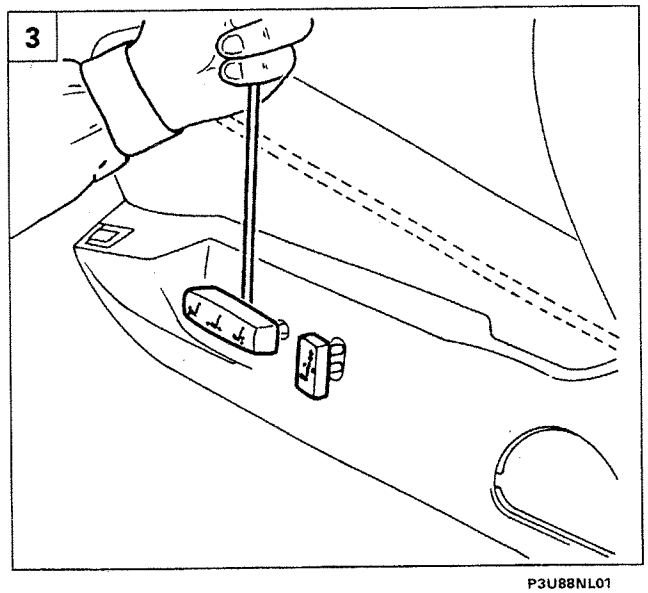

P3U88NL01

Manual movement of seat with motorized adjustment and position memory

1. If necessary, to gain access to the bolts fixing the seat to the vehicle, it is possible to move it by inserting the end of tool 1870719000 in the housing for the sliding motor (1), as illustrated in the diagram.

Removing-refitting heater pad control switch and position programming control panel

2. Working from the inside of the control shield, remove the heater pad control switch (1) and the position programming panel (2) and disconnect the electrical connections.

Removing-refitting seat control shield

If fitted, remove the heater pad control switch and the position programming panel and disconnect the electrical connections as described previously.

3. Remove the trims covering the switches, as illustrated in the diagram.

4. Loosen the fixing bolts shown and remove the controls shield from the seat.

4

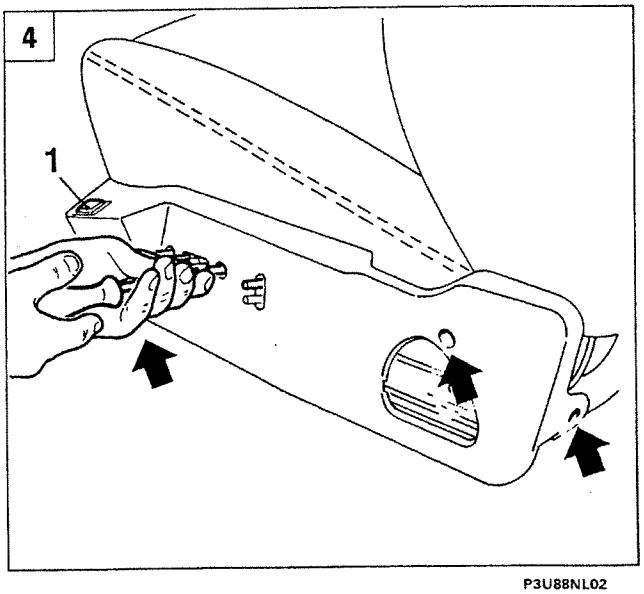

P3U88NL02

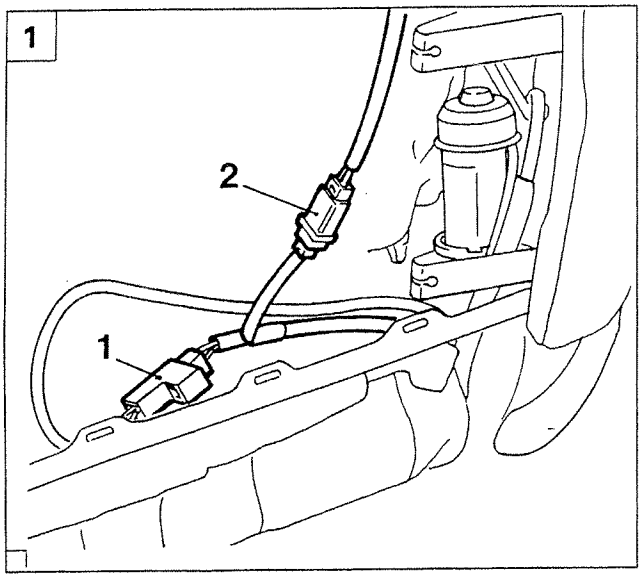

P3U94NL02

Removing-refitting seat adjustment controls

Remove the controls shield and remove the rear backrest cover, following the procedure described previously.

1. Disconnect the supply connections for the motors for adjusting the backrest angle (1) and the head restraint height (2).
2. Undo the fixing bolts (3) and remove the seat adjustment control unit from the support.
   Disconnect the supply connections from the operating motors.
3. To faciliate the removal of the wiring, remove the three securing clips (4) for the cushion cover, at the rear of the seat; remove the securing bands illustrated and remove the control panel complete with wiring from the seat.

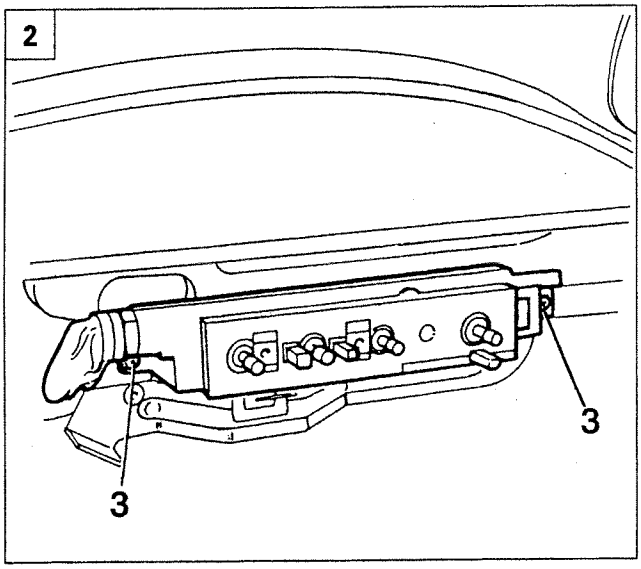

P3U94NL03

Removing-refitting cushion cover

Remove the seat controls shield from the support (without removing the wiring) following the previous description.

4. Fold the seat over to gain access to the protective casing for the Side Bag connection, open the casing cover, remove the connector and release the cable from any fixings.

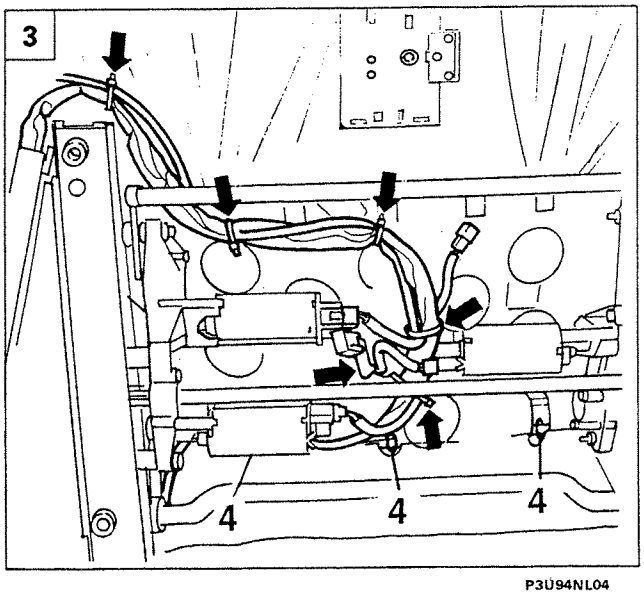

P3U94NL04

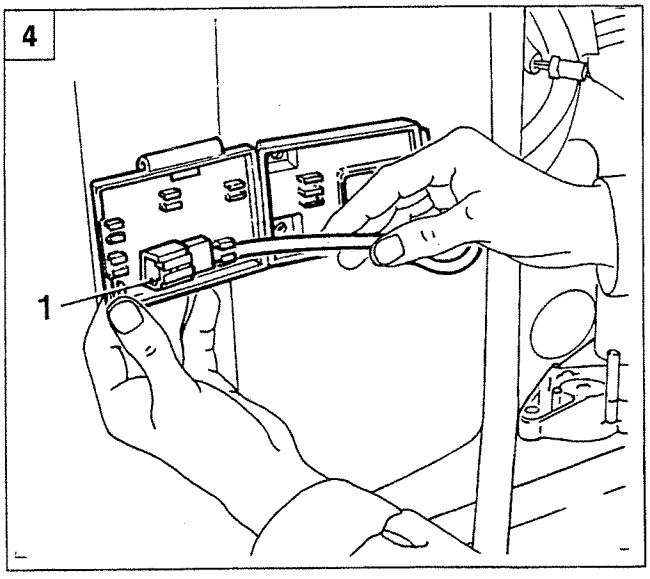

P3U94NL05

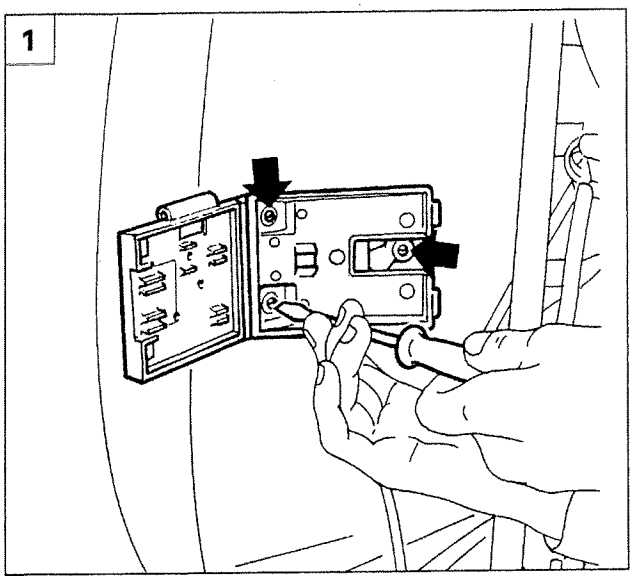

P3U93NL03

1. Undo the bolts shown and remove the protective casing for the Side Bag connection.

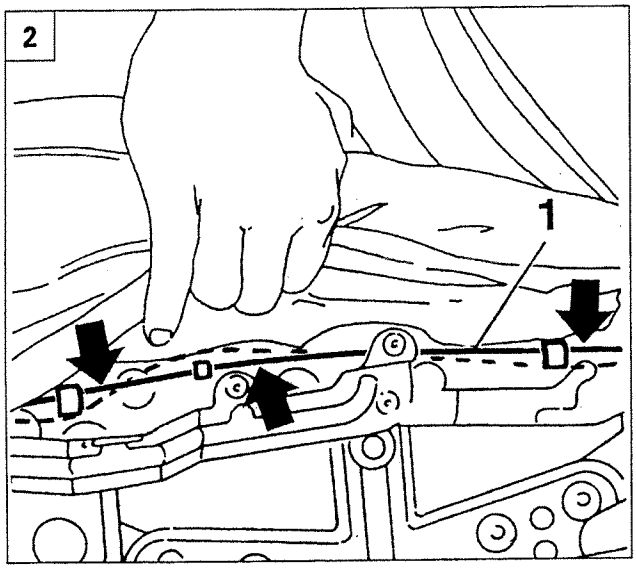

P3U95NL01

2. Release the retaining rods (1) for the cover from the fixings shown at the sides of the seat structure.

3. Remove the retaining clips for the cover (2) located at the base of the seat at the points shown and remove the retaining rods from the edges of the actual cover.

4. Remove the clips securing the cover to the cushion upholstery, located at the points shown, taking great care not to damage the PPD sensor.

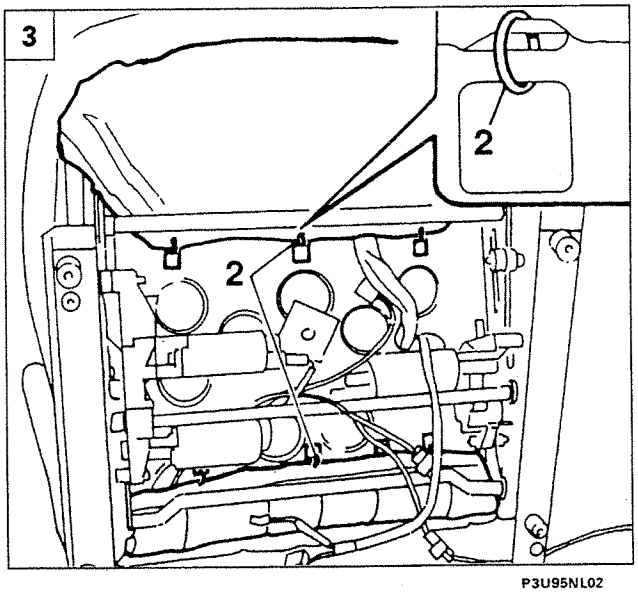

P3U95NL02

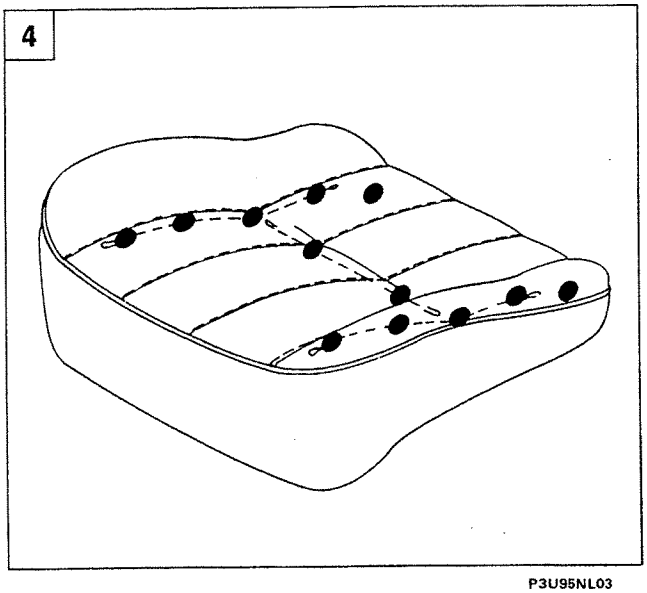

P3U95NL03

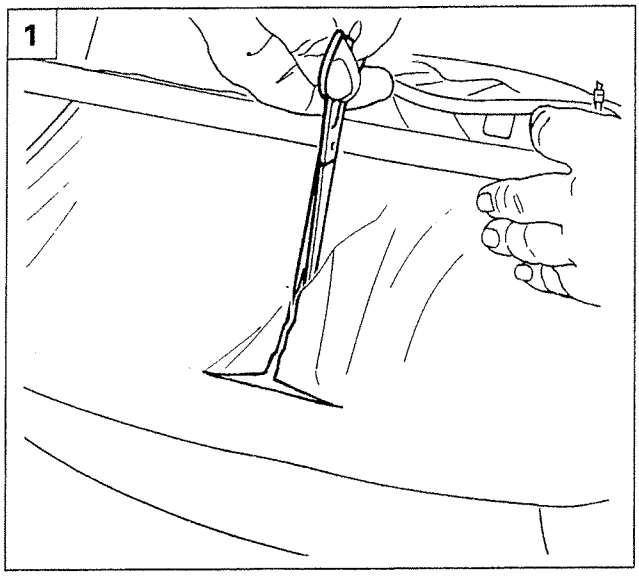

P3U96NL01

When refitting, reverse the order of the operations carried out for the removal, taking care not to make creases in the cover.

1. If the cushion cover is being replaced, after having renewed the cover, make a cut by the point where the protective casing is fitted, as illustrated in the diagram, to allow the actual casing to be fitted.

Each time operations are carried out on the Air Bag system, at the end of the procedure, the operation must be checked using the appropriate diagnostic equipment.

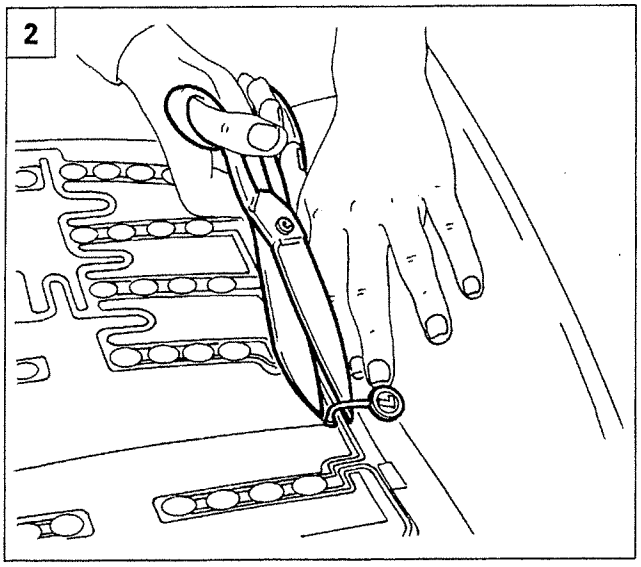

P3U90NL01

Removing-refitting passenger presence sensor (PPD)

Remove the cushion cover following the procedure described on the previous pages.

2. Cut the warranty seal taking great care not to damage the sensor.

The seal ensures the correct operation of the PPD sensor. The moment the seal is removed, for any reason, the manufacturer's warranty is no longer valid. When refitting, restore the original Fiat warranty seal.

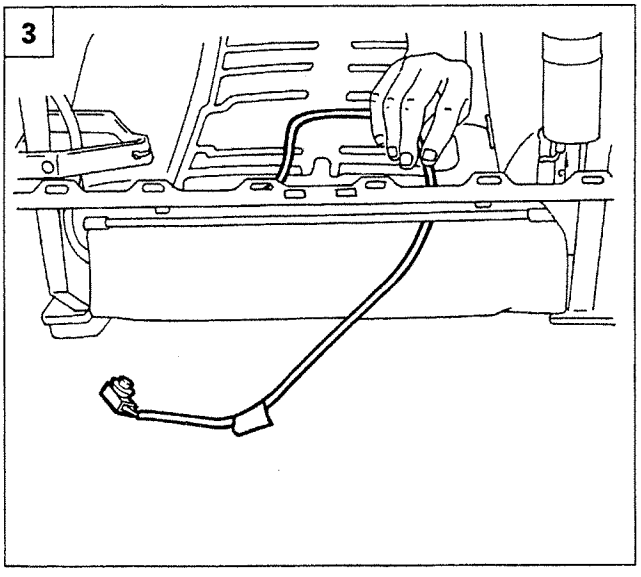

P3U90NL02

3. Remove the PPD supply cable from the base of the seat, removing the securing bands and release the cable.

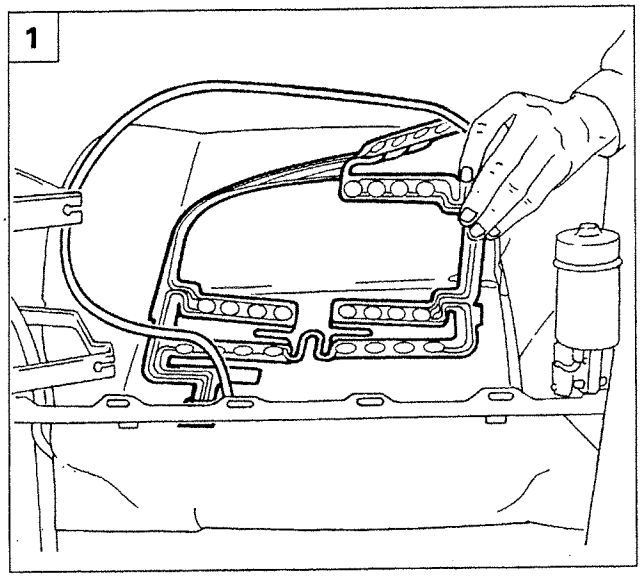

P3U90NL04

1. Remove the PPD sensor from cushion upholstery, taking care to avoid damaging it.
2. Remove the cable without damaging it, passing it under the backrest crossmember.
3. To refit, position the PPD sensor with the adhesive section facing the upholstery without distorting it, ensuring that the projections illustrated are in line with the slit in the actual upholstery as illustrated in the diagram and renew the warranty seal. Reattach the cover and the protective casing following the procedure described previously.

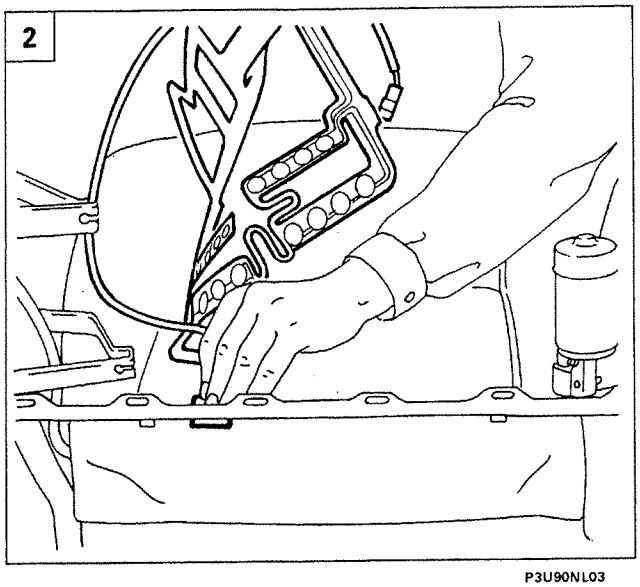

P3U90NL03

Each time operations are carried out on the Air Bag system, at the end of the procedure the operation must be checked using the appropriate diagnostic equipment.

Removing-refitting cushion heater pad

Remove the cushion cover following the procedure described on the previous pages.

Release the supply cable for the heater pad from any bands.

4. Remove the heater pad taking care not to damage the PPD sensor.

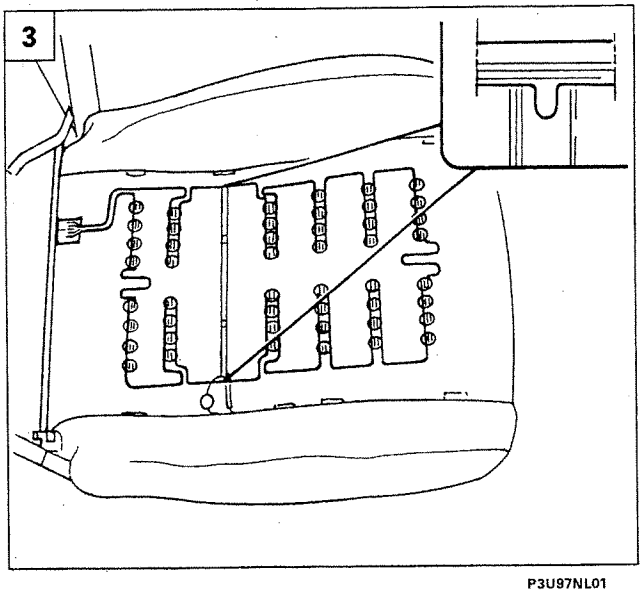

P3U97NL01

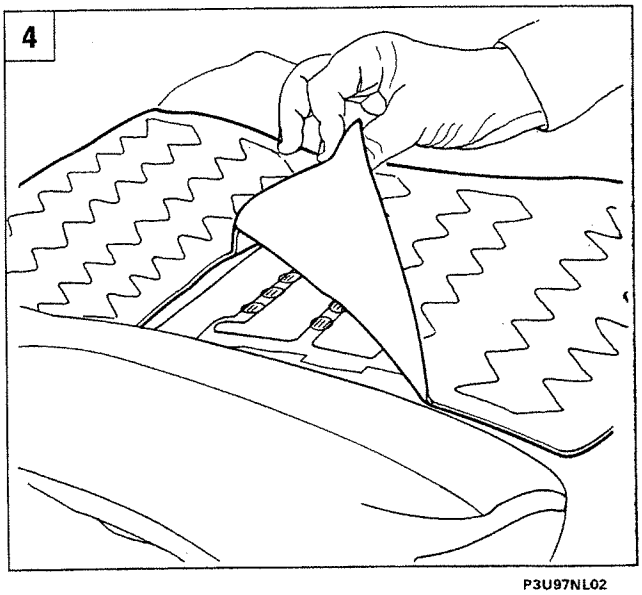

P3U97NL02

55.

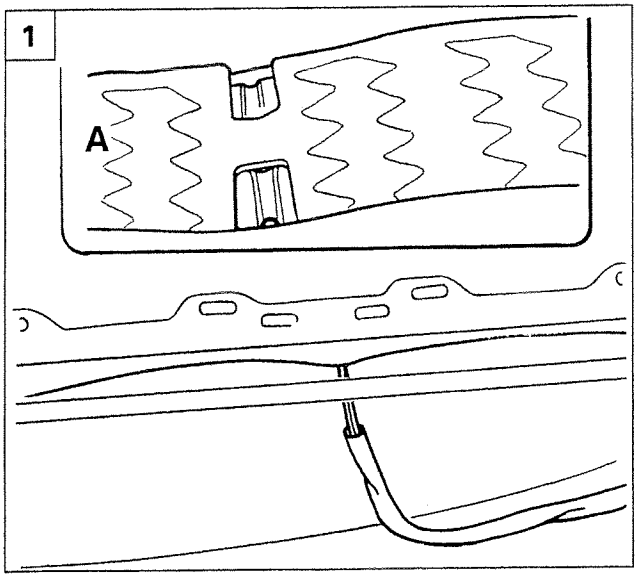

P3U98NL01

1. When refitting, position the heater pad with the adhesive side facing the PPD sensor and the openings shown by the slit in the cushion upholstery. Renew the cushion cover reversing the order of the operations described previously.

Removing-refitting cushion upholstery

Remove the cushion cover, remove the PPD sensor and heater pad, if fitted and move the aside following the procedure described previously.

2. Release the two rods securing the upholstery to the base of the seat and remove the actual upholstery from the seat.

When refitting, reverse the order of the operations carried out for the removal, taking care not to damage the PPD sensor and make creases in the cover.

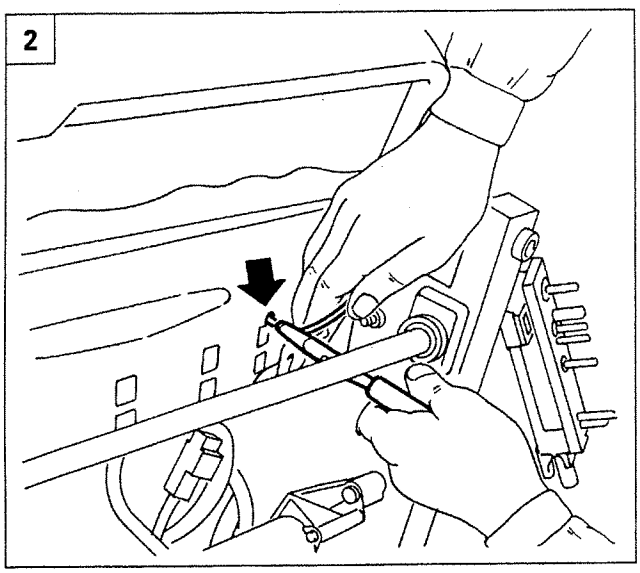

P3U91NL01

Removing-refitting motorized base

Remove the seat adjustment controls shield and the control device and disconnect the connections from the motors at the base, following the procedure described previously.

3. Remove the rivets shown in the diagram using a 5 mm drift for drilling and remove the control device mounting bracket.
4. Undo the bolts for the motorized base shown in the diagram, at the sides of the seat and remove the basic from the actual seat.

To refit, repeat the procedure carried out for the removal, reversing the order of the operations and tightening the bolts fixing the base to a torque of 2.5 daNm.
Refit the mounting bracket fixing it with the 4.8 mm diameter rivets.

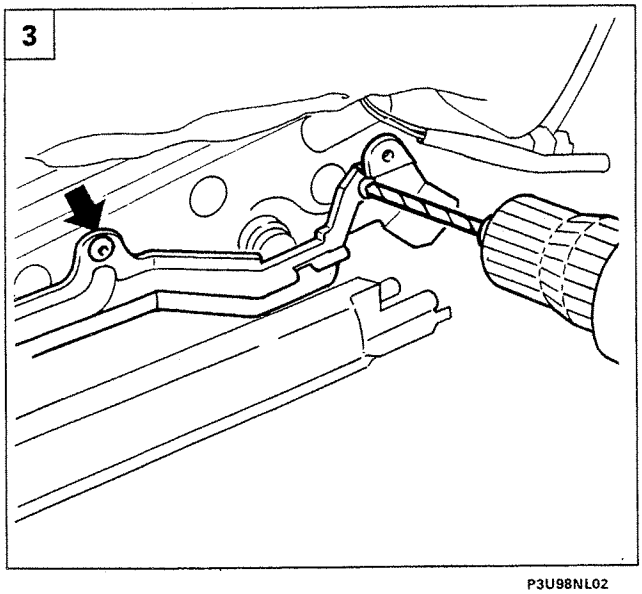

P3U98NL02

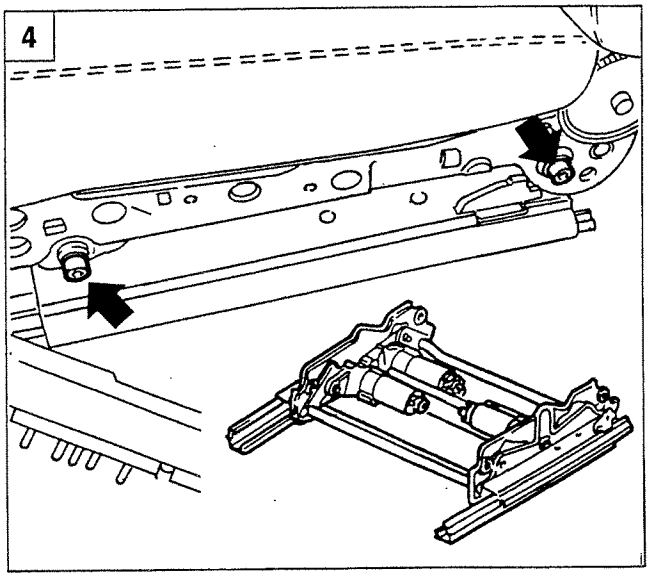

P3U98NL03

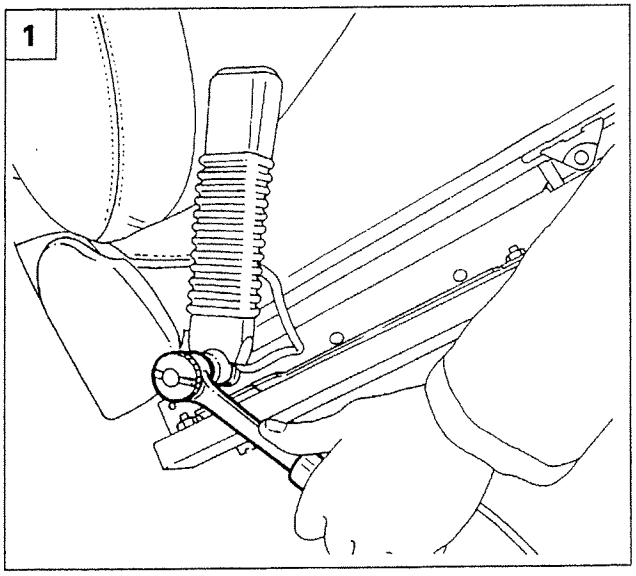

P3U91NL03

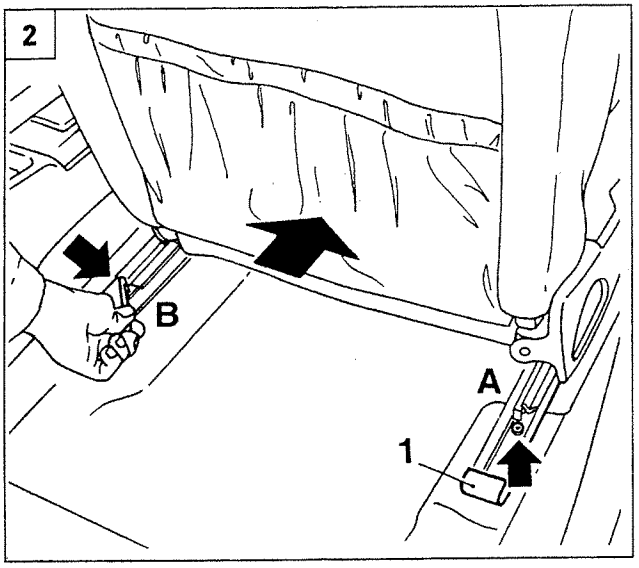

P3U99NL01

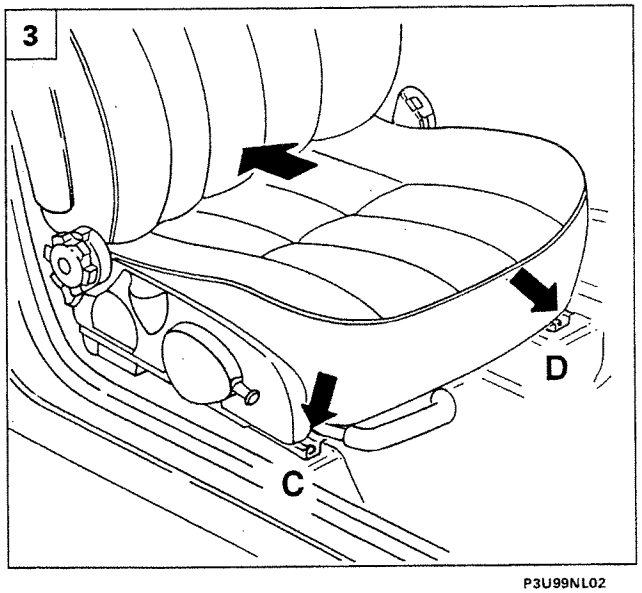

P3U99NL02

Removing-refitting device signalling seat belts not fastened

Remove the seat from the vehicle following the procedure described on the previous pages and release the supply cable from any securing bands.

1. Remove the protection for the bolt fixing the device and undo the fixing bolt and remove the device from the seat structure.

When refitting, reverse the order of the operations described for the removal, taking care to tighten the fixing bolt to a torque of 5 daNm.

Manually adjusted seat

The operations of handling and checking the seats MUST be carried out following the safety regulations given below.
Before disconnecting the connections for the Air Bag system (cables with yellow outer casing), both the battery leads must be disconnected and carefully insulated with tape and it is necessary to WAIT FOR 10 MINUTES.
Each time operations are carried out on the Air Bag system, at the end of the procedure, the operation must be checked using the appropriate diagnostic equipment.

REMOVING

Remove the seat following the instructions for the seat with motorized adjustment, after having adjusted the seat tothe maximum height position. Disconnect the electrical connections taking special care over the connections for the Side Bag and the PPD sensor.

REFITTING

Move the seat forwards into the end of travel position (with the guides back - check that it clicks into position) fitting the guide covers.

2. Carefully fit the seat in the vehicle without interference with the floor covering. Tighten the bolts A and B fixing the guides to the floor.
3. Move the seat backwards, into the end of travel position and tighten the bolts C and D fixing the guides to the floor. Check that the release lever is in the correct position and that there is no lengthwise clearance.

Copyright by Fiat Auto

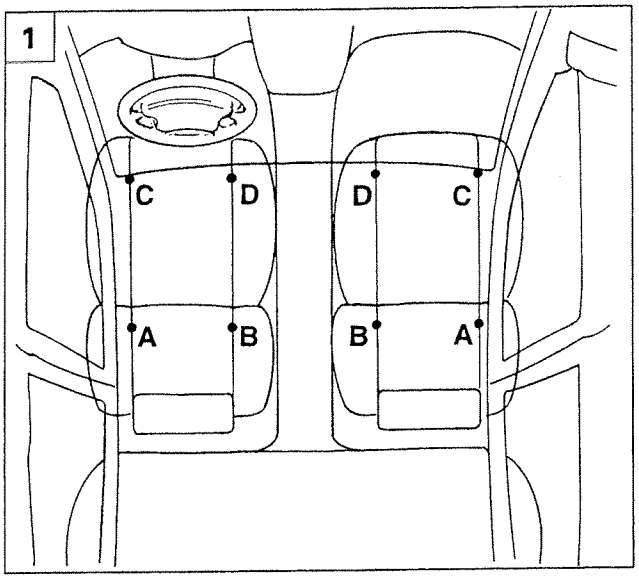

P3U00OL01

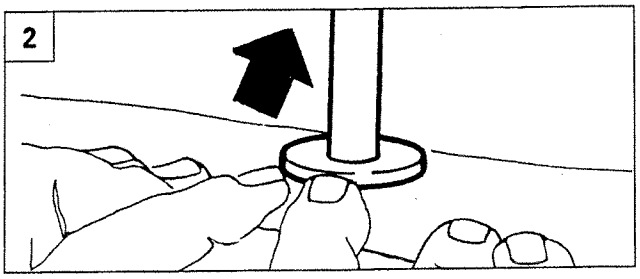

P3U00OL02

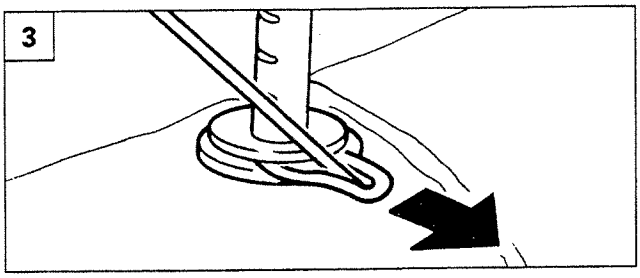

P3U00OL03

1. If there is clearance, proceed with "timing" the outer guide with the inner one, following the instructions below:

loosen the outer bolts (A and C), slide backwards and forwards several times checking that the lever is correctly attached, then tighten all the fixing bolts to a torque of 2.5 daNm.

Dismantling the manually adjusted seat

NOTE *To dismantle the seat, follow the instructions for the seat with motorized adjustment.*

Removing-refitting manually adjusted head restraint

Raise the head restraint into the maximum height position.

2. Using your finger, remove the shields for head restraint bushes.
3. Remove the securing clips (1) and remove the head restraint from the seat.

Removing-refitting head restraint cover

Remove the head restraint from the seat following the previous instructions.

4. Remove the edges of the cover, as illustrated in the diagram.
5. Remove the clips retaining the cover; remove the head restraint cover and, if necessary, separate the upholsteryfrom the head restraint structure, following the procedure described for the head restraint with motorized adjustment.

When refitting, repeat the operations carried out for the removal in the reverse order taking care to position the cover clips so as not to make creases.

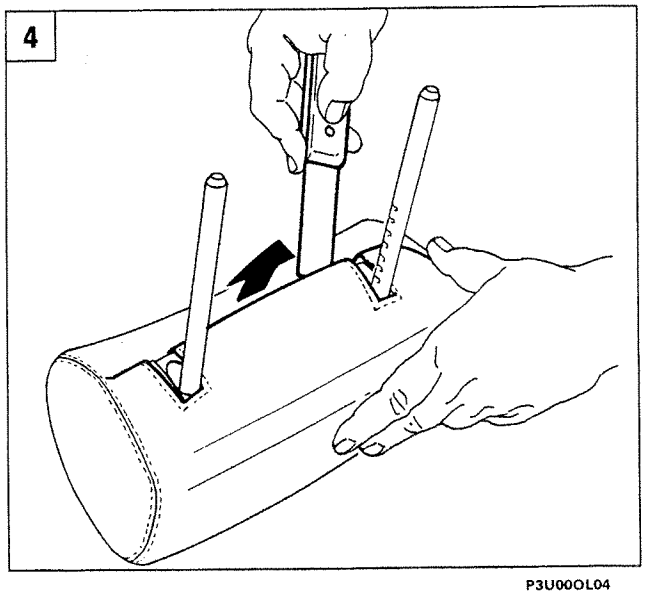

P3U00OL04

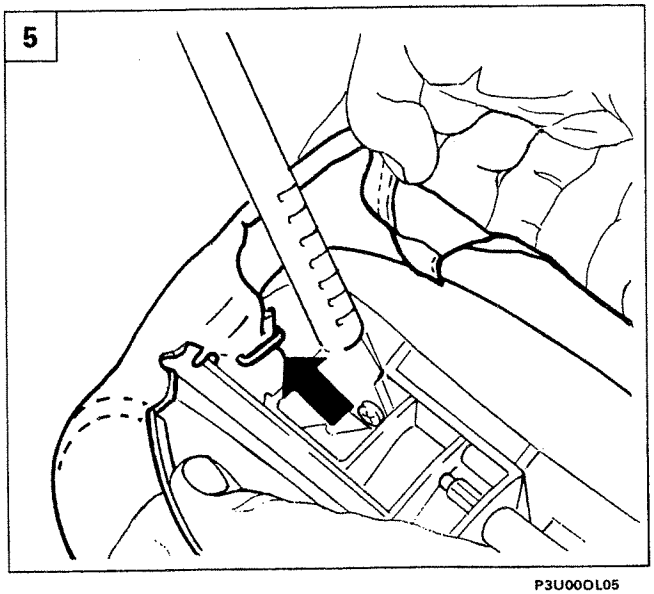

P3U00OL05

3U00OL

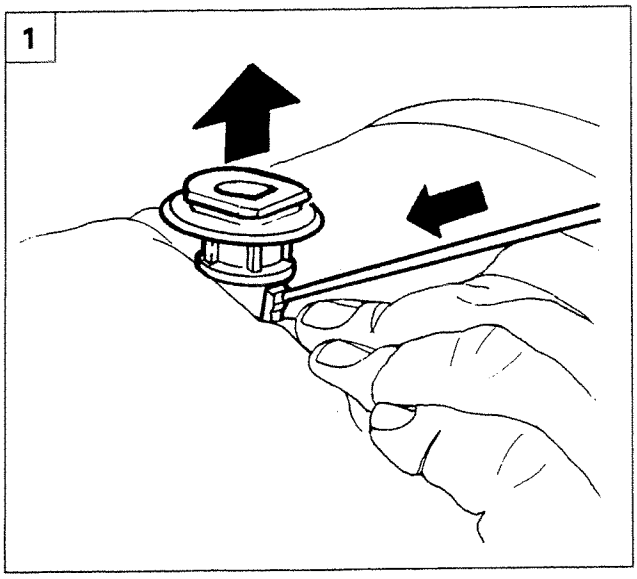

P3U01OL01

Removing-refitting bushes for manually adjusted head restraint

Remove the rear backrest cover, remove the edge of the cover and remove the head restraint following the instructions on the previous pages.

1. Press the cover surrounding the left bush, then act on the retaining springs and remove the bush from the housing.

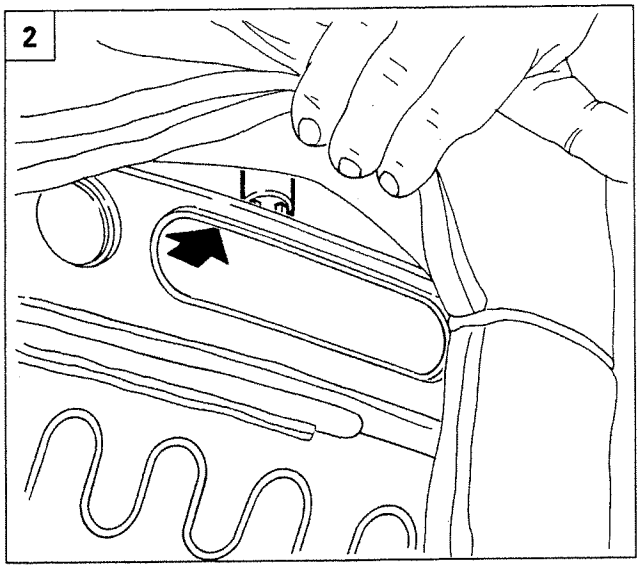

P3U01OL02

2.3. Working from the rear of the seat, press the retaining spring and remove the right bush from the housing (in the interest of clarity, the point for the right bush is illustrated in the diagram with the backrest cover removed).

4. When refitting, reverse the order of the operations carried out for the removal, taking care to position the bushes correctly in their housing, as illustrated in the diagram. After having fitted the head restraint, make sure that the securing clips are correctly fitted.

A. Right bush
B. Left bush

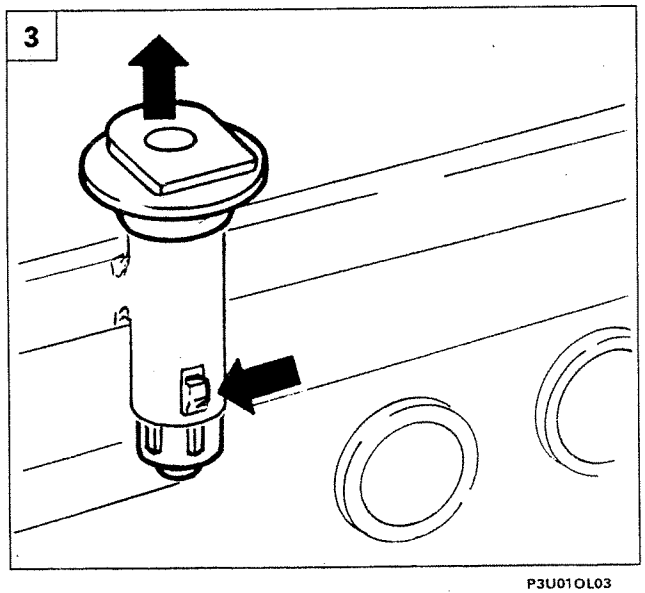

P3U01OL03

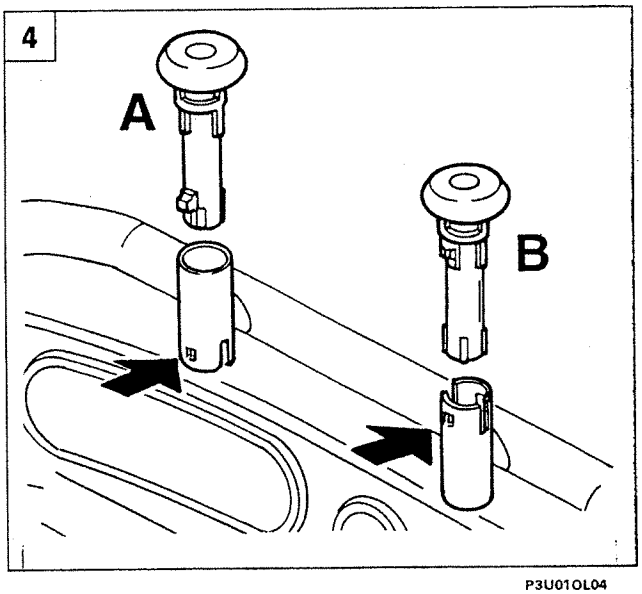

P3U01OL04

3U01OL

55.

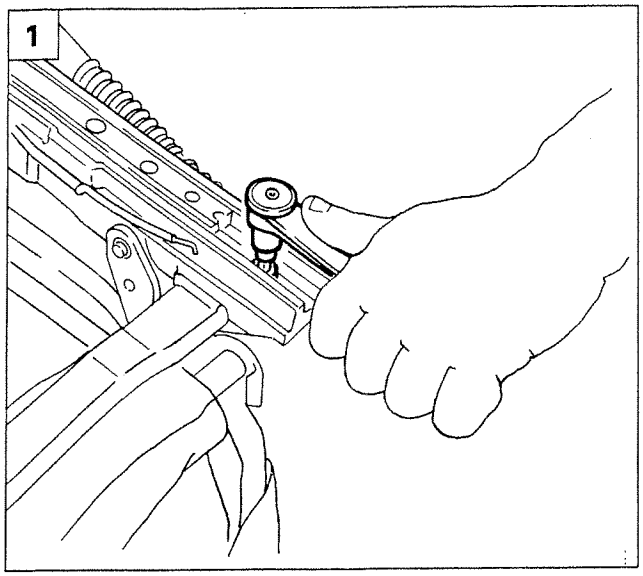

P3U02OL01

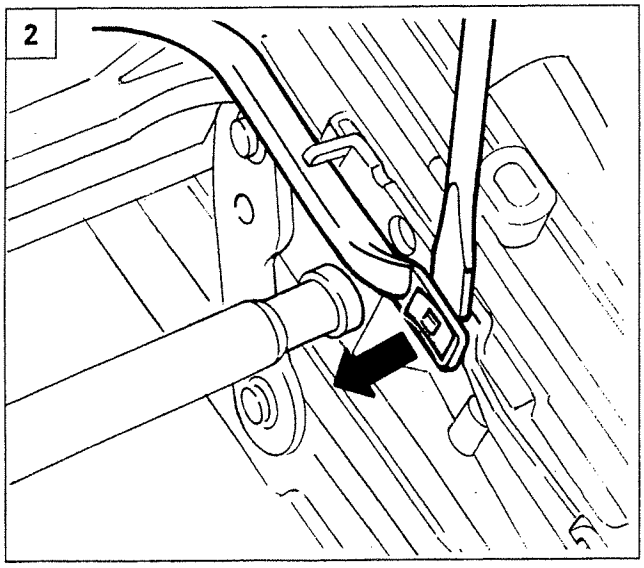

P3U02OL02

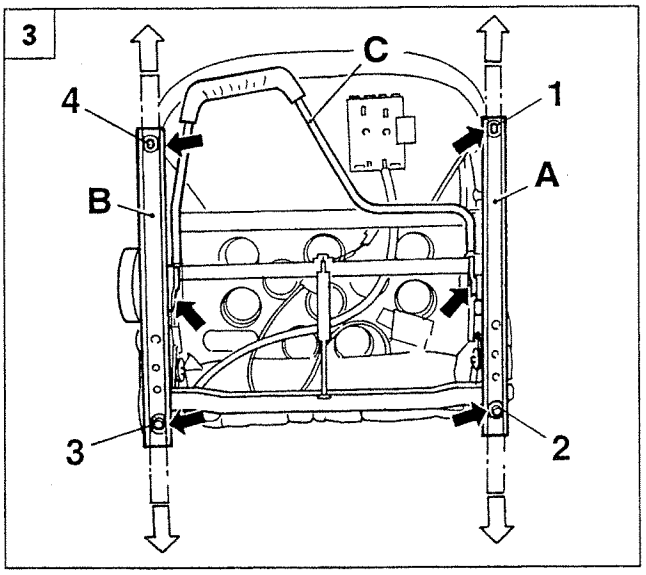

P3U02OL03

3U02OL

Removing-refitting sliding guides

1. Press the release lever and move the guides forwards and backwards to be able to undo the bolts fixing it to the base.
2. Remove the retaining spring and remove the lever from the release devices on each guide.
3. Position the left guide (A) on the base of the seat, press the release device and move the sliding part to partly tighten the fixing bolts (1) and (2) shown in the diagram.

Position the right guide (B) on the base, move the sliding part and tighten bolt (3) illustrated in the diagram without tightening fully.

Pressing the release devices for the guides, move the sliding part of the guides backwards in the end of travel position, making sure that both sliding parts are correctly attached to the first notch of the position tooth.

Renew the release lever (C) for the devices for the two guides shown and lock it in position with new springs, ensuring that it is correctly positioned.

Move the sliding guides and tighten the remaining bolt (4).

Tighten all the bolts to a torque of 2.5Nm.

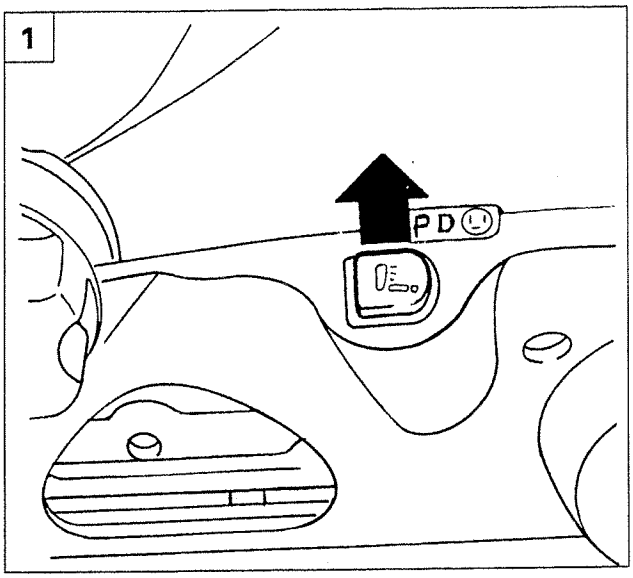

P3U03OL01

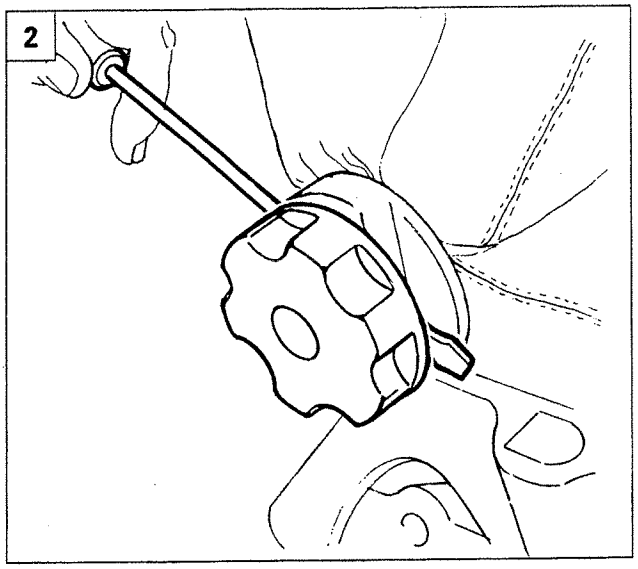

P3U03OL02

Removing-refitting manually adjusted base

1. Working from inside the side trim, remove the switch for the heater pad, if fitted and disconnect the electrical connection.
2. Remove the backrest adjustment knob working as illustrated in the diagram.
3. Undo the fixing bolt and remove the shield.
4. Loosen the fixing bolts shown and remove the trim from the seat.

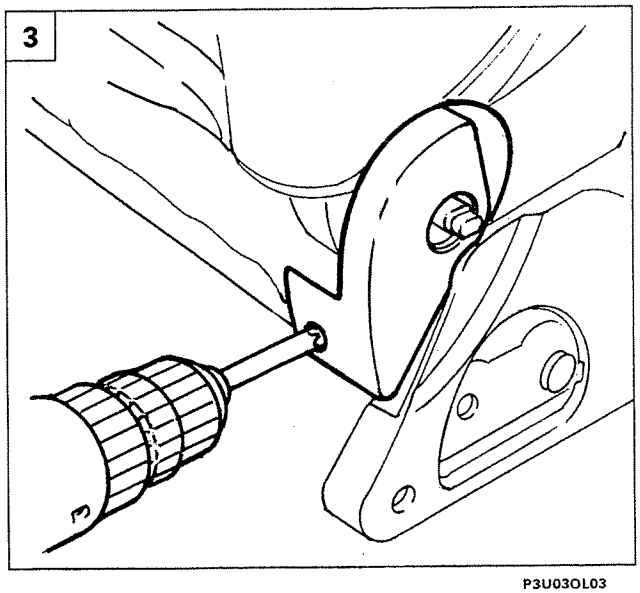

P3U03OL03

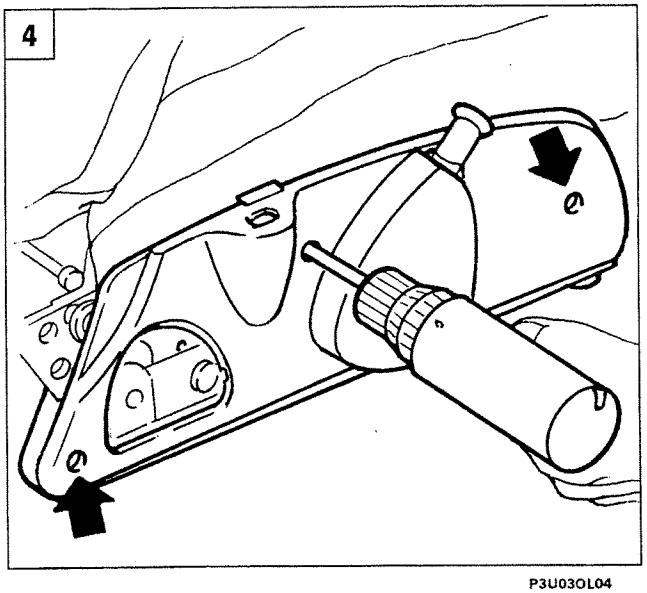

P3U03OL04

3U03OL

1

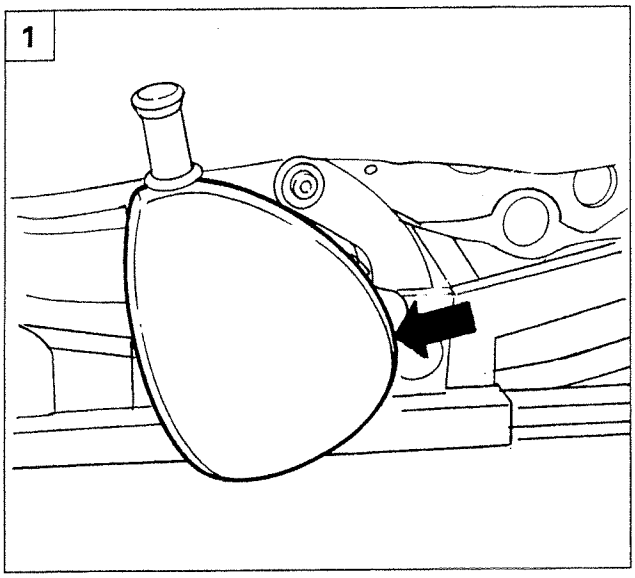

P3U04OL01

1. Undo the bolt shown and remove the clutch trim.
2. Remove the protective cap, undo the bolt and remove the seat belt mounting device. When refitting, repeat the operations carried out for the removal in the reverse order tightening the fixing bolt to a torque of 5 daNm.
3. Loosen the fixing bolts shown at the sides of the base and remove the actual base from the seat. When refitting, repeat the operations carried out for the removal in the reverse order tightening the fixing bolts to a torque of 2.5 daNm.

Checks to be carried out if the Side Bag module is activated in the case of an impact

The activation of the Side Bag does not cause any distortions to the structure of the backrest, whilst the intensity of the impact which has caused the activation may cause distortion to the structure of the seat.
In the case of activation resulting from an impact, check that all movements take place without sticking or noise.

2

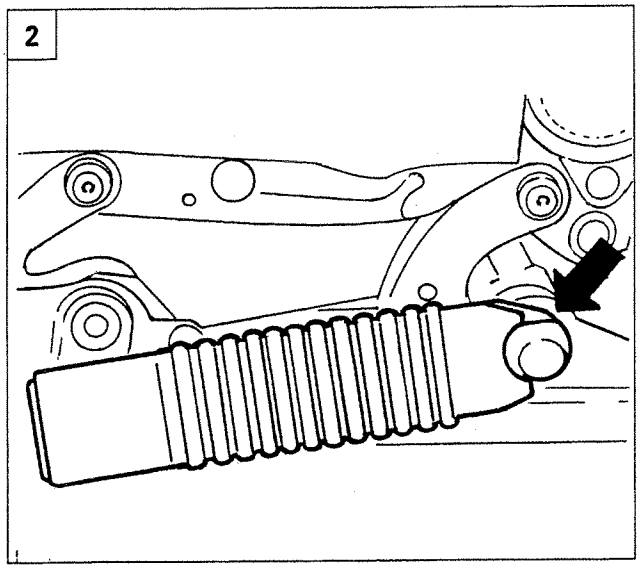

P3U04OL02

4. Check the dimensions of the backrest structure, measuring the diagonals, which must be the same, at the points illustrated in the diagram.

3

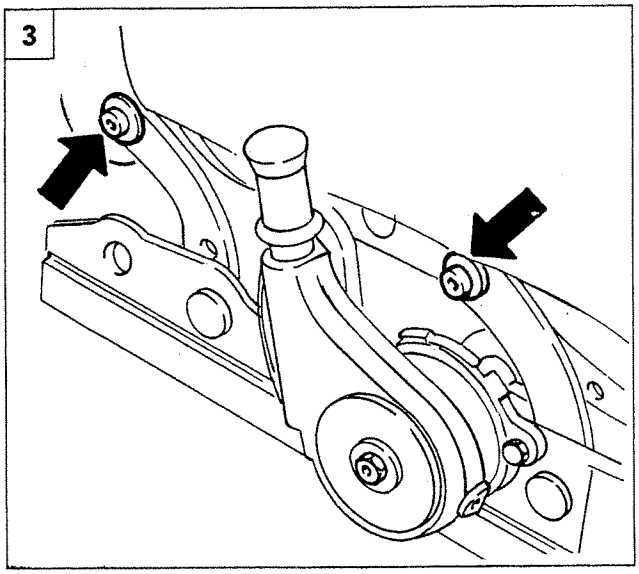

P3U04OL03

4

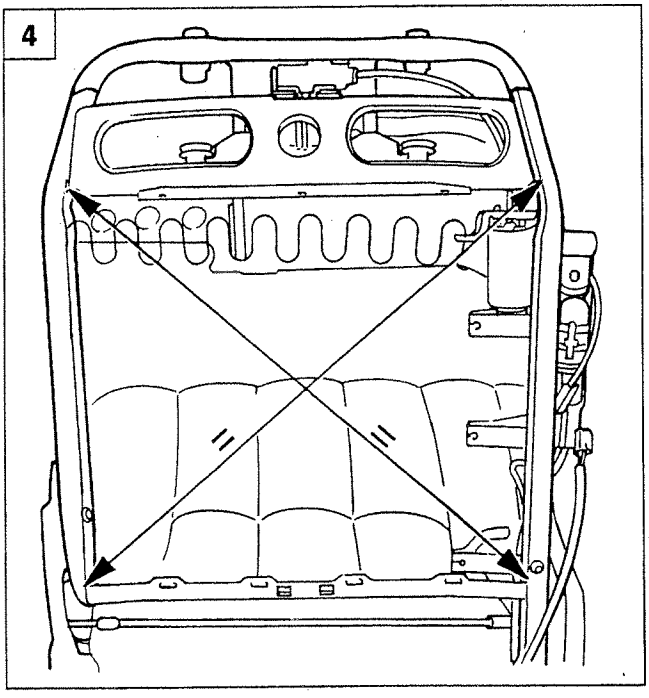

P3U04OL04

3U04OL

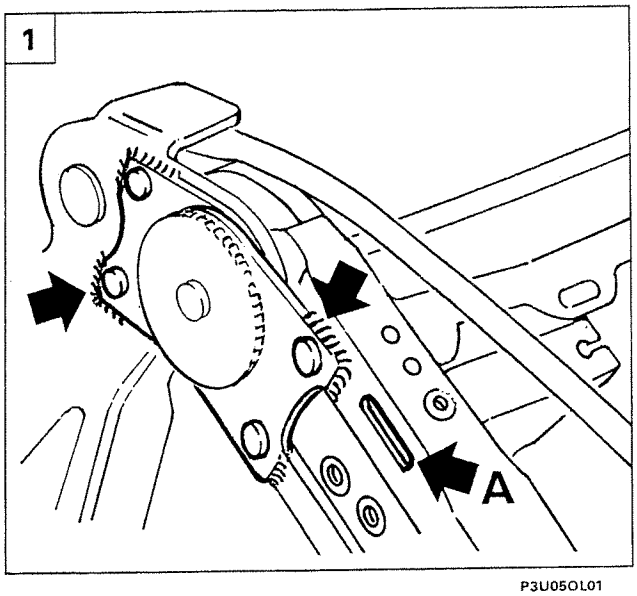

1. Check the seal of the sections of welding, in particular those near the backrest join, also check that the slot (A) has not been distorted.

REMOVING-REFITTING SIDE BAG MODULE

Remove the rear backrest cover and carry out the procedure for removing the head restraint and complete cover for the backrest, following the instructions on the previous pages.

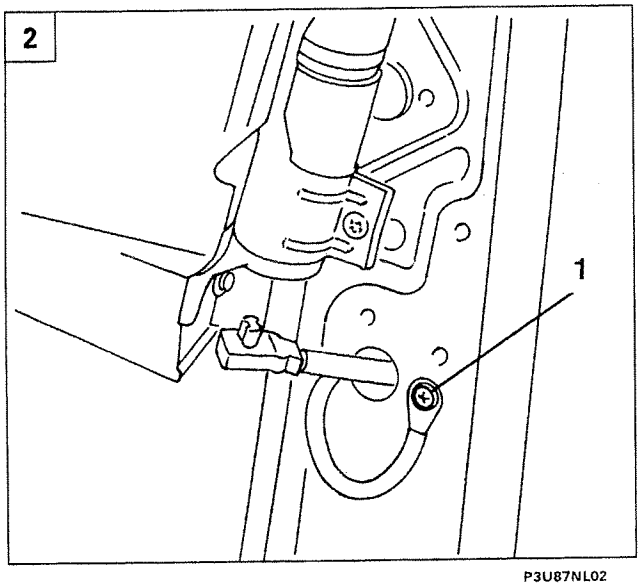

2. Undo the bolt (1) and remove the earth connection for the wiring.
3. Undo the bolt (2) at the outside of the backrest structure.
4. Undo the bolt (3) at the inside of the backrest structure and remove the Side Bag module.

Handle with care and follow the SAFETY INSTRUCTIOSN on the plates on the cushion container and the instructions in the SAFETY INSTRUCTIONS chapter on handling Air Bag devices in Section 55 of the "LANCIA k" 2nd Volume Service Manual.

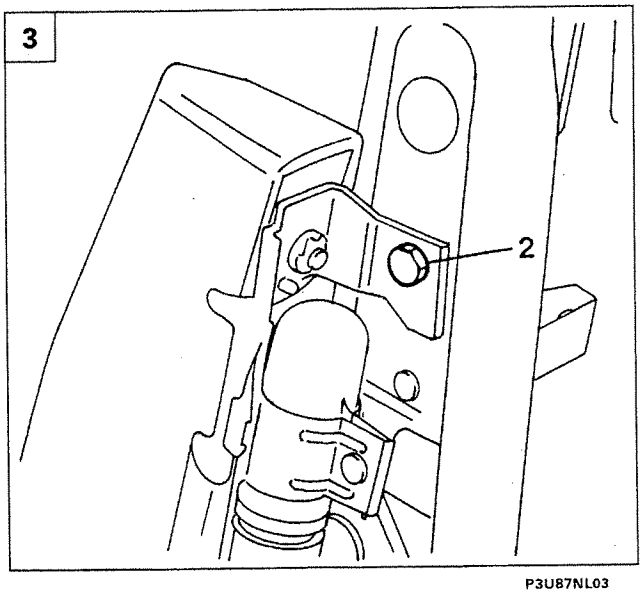

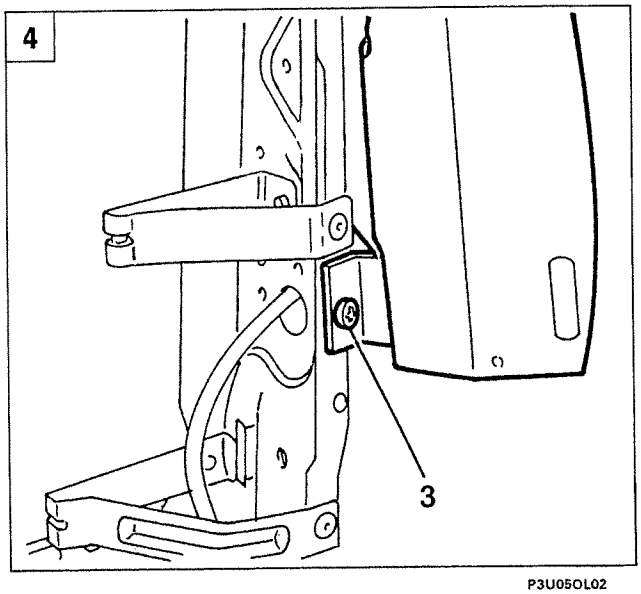

3U05OL

1

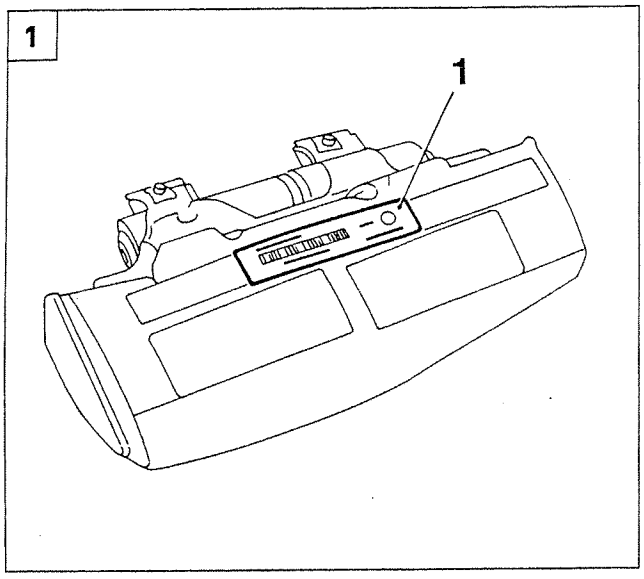

P3U06OL01

2

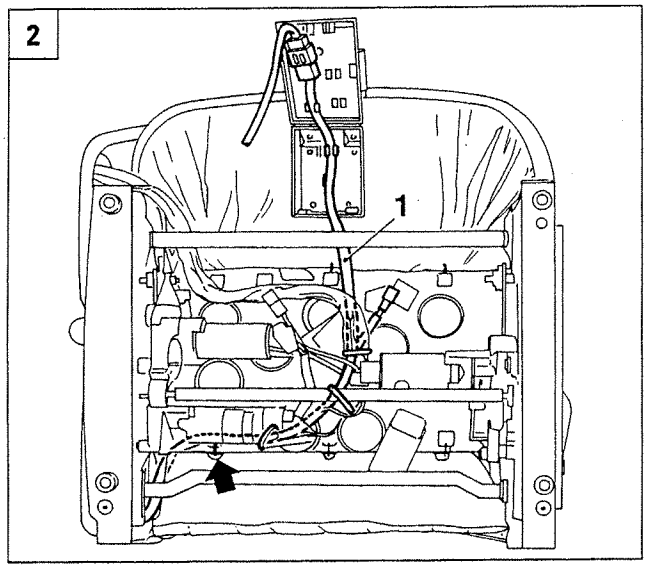

P3U06OL02

3

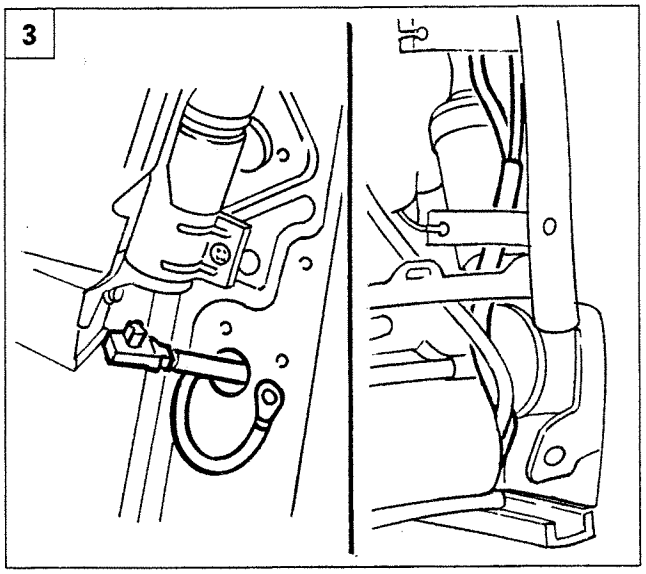

P3U06OL03

3U06OL

1. When refitting, repeat the operations carried out for the removal in the reverse order checking that the connections are correct.

If the Side Bag module is being replaced, remove the self-adhesive label (1) giving the serial number, illustrated in the diagram, and place it in a visible position at the front of the seat structure, as described in the chapter on the Side Bag module.
Also record the details on the label in the special register.
Tighten the bolts fixing the Side Bag module to a torque of 0.7 Nm; then tighten the bolt (1) fixing the earth lead (see diagram on previous page).

REMOVING-REFITTING SIDE BAG CABLE

Remove the rear backrest cover, partly remove the complete backrest cover without removing the head restraint following the procedure described on the previous pages.

2. Remove the retaining clip illustrated to facilitate the passage of the cable (1); carefully disconnect the connection from the Side Bag module and undo the bolt fixing the wiring earth connection.

3. Remove the connector from the protective cover, remove the bands securing the cable (1) at the base of the seat and remove the actual cable from the structure.

When refitting, reverse the order of the operations carried out for the removal, taking great care by the backrest join and the opening near the Side Bag module where the cable must pass without force or compression.

Each time operations are carried out on the Air Bag system, at the end of the procedure, the opreation must be checked using the appropriate diagnostic equipment.

EXHAUST GAS HEADLAMPS AND AUTOMATIC HEADLAMP ALIGNMENT CONTTOL

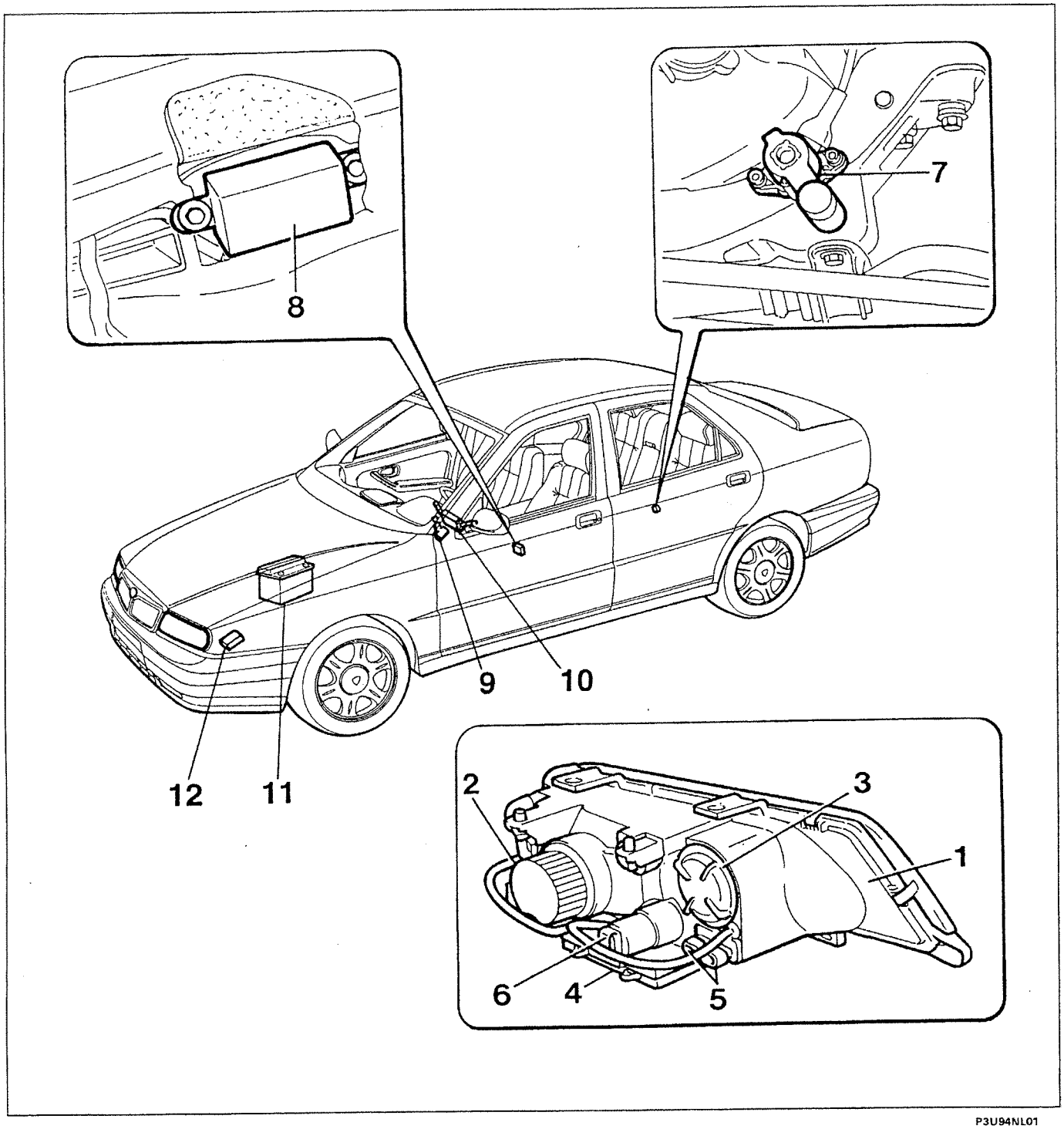

P3U94NL01

1. Complete headlamp
2. Xenon dipped headlamp bulb
3. Iodine headlamp bulb housing
4. Lamp control unit (ballast)
5. Lamp connectors
6. Headlamp alignment actuator
7. Static load sensor
8. Headlamp alignment control unit
9. Ignition switch
10. Steering column switch unit
11. Battery
12. Relay and fuse

NOTE *The description of system is in section 55 - Electrical equipment - Lighting of the "LANCIA k Coupè" Service Manual (Print no.506.475/19)*

3U07OL

55.

INTRODUCTION

On the Lancia k '98 range the "LANCIA CODE" control unit has been moved to under the dashboard on the driver's side and the Lancia CODE failure warning light is now in the instrument panel.

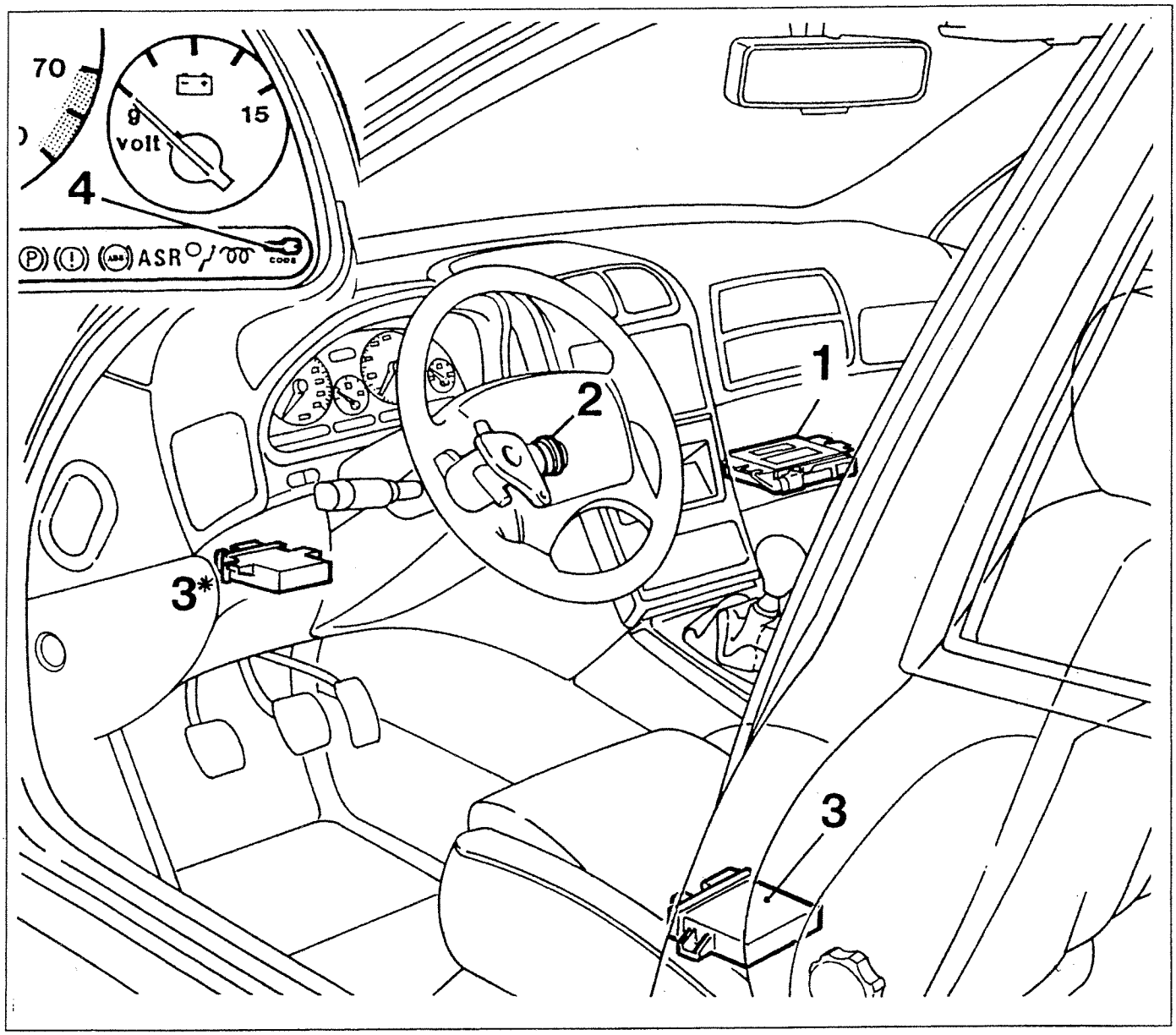

P3U08OL01

1. Injection control unit
2. Ignition switch with aerial for LANCIA CODE
3. Lancia CODE control unit
3* Lancia CODE control unit (introduced from chassis No. 2085127 - organization n° 2078627)
4. Lancia CODE failure warning light

3U08OL

INSTRUMENT PANEL (Petrol and automatic transmission versions)

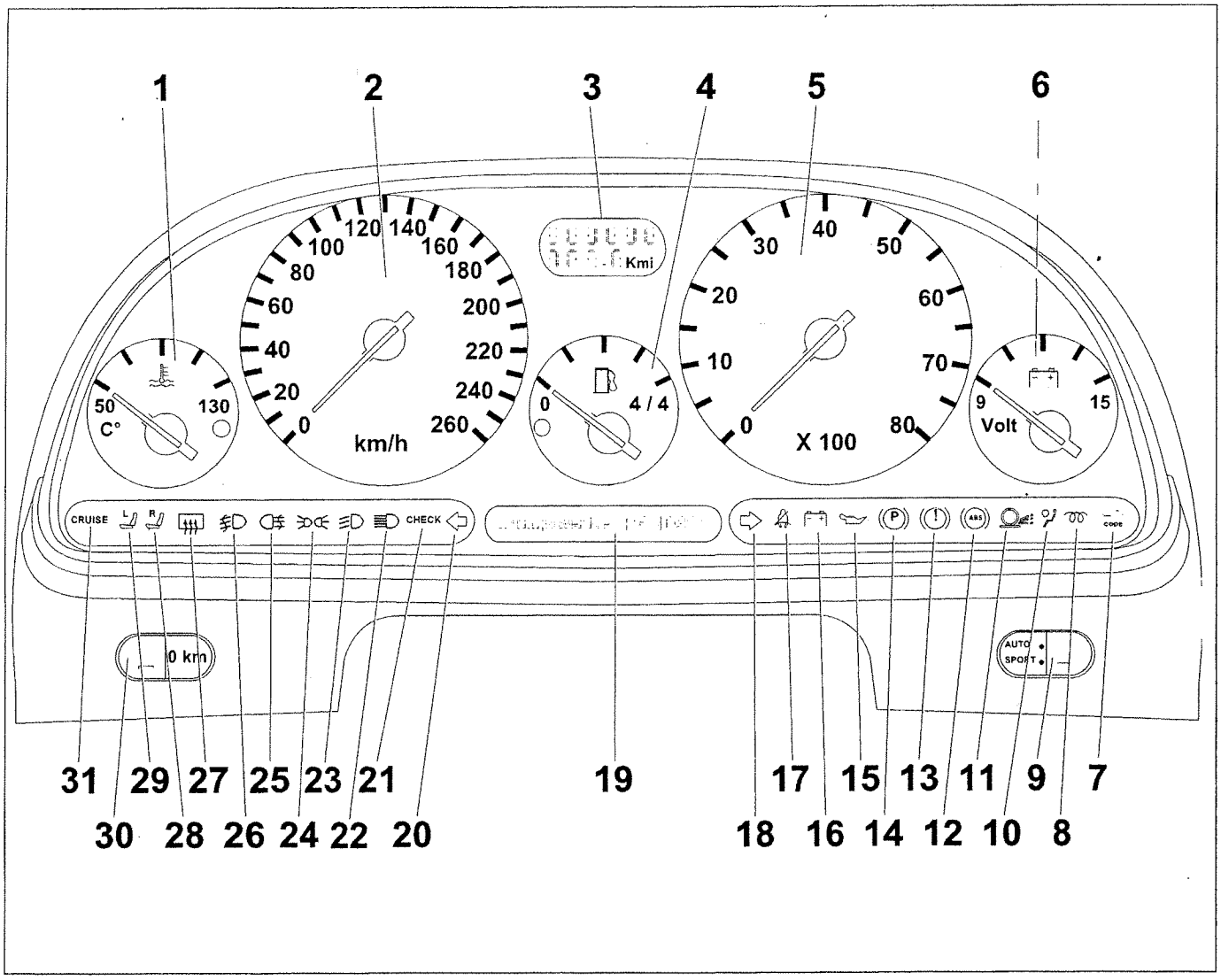

P3U09OL01

1. Engine coolant temperature gauge and warning light
2. Electronic tachometer
3. Trip meter LCD
4. Fuel gauge and warning light
5. Electronic rev counter
6. Voltmeter
7. LANCIA CODE warning light
8. Heater plugs warning light (diesel versions only)
9. Controlled suspension button
10. Air Bag failure warning light
11. Antispin/Traction Control warning light
12. ABS failure warning light
13. Insufficient brake fluid level warning light
14. Hanbrake warning light
15. Engine oil pressure warning light
16. Alternator warning light
17. Seat belt warning light
18. Right side direction indicators warning light
19. Display for vehicles with automatic transmission (Aisin - ZF)
20. Left side direction indicators warning light
21. Check summary warning light
22. Main beam headlamps warning light
23. Dipped headlamps warning light
24. Side lights warning light
25. Rear fog lamps warning light
26. Fog lights warning light
27. Heated rear windscreen warning light
28. Right heated seat warning light
29. Left heated seat warning light
30. Trip meter zeroing button
31. Cruise control warning light

3U09OL

55.

Rear view of instrument panel

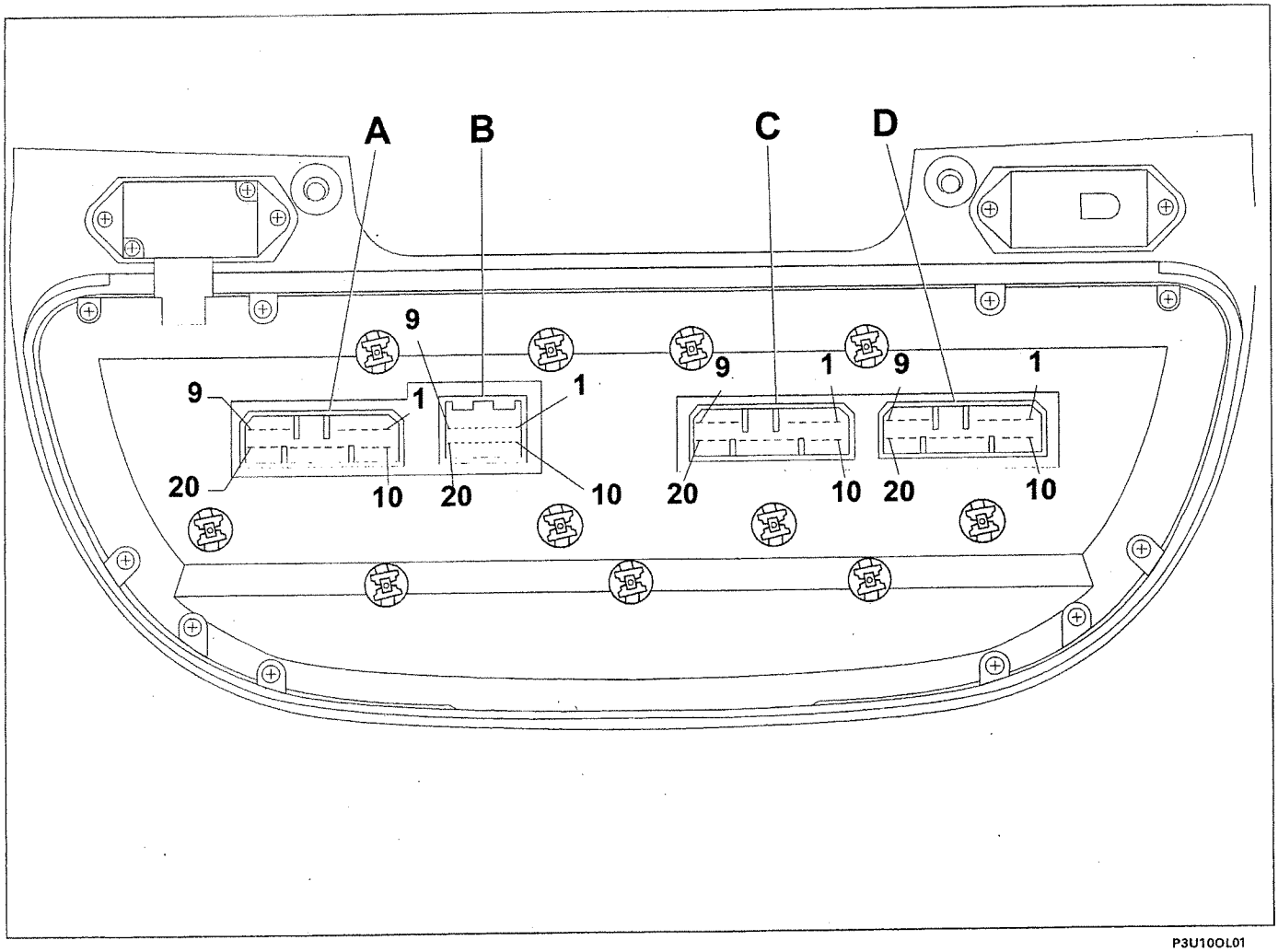

A. 20 pin white connector (for warning lights)
B. 20 pin black connector (automatic transmission)
C. 20 pin blue connector (engine compartment)
D. 20 pin black connector (various services)

DESCRIPTION OF CABLES AND CONNECTORS

CONNECTOR A		
Terminal No.	**Cable colour**	**Circuit concerned**
1	LR	Main beam headlamps warning light
2	RV	Check warning light
3	AN	Left direction indicator warning light
4	CB	Rear fog lamps warning light (IGE control unit)
5	GN	Side lights warning light (IGE control unit)
6	HV	Dipped headlamps warning light
7	BN	Fog lights warning light (IGE control unit)
8	AV	Right heated seat warning light
9	AG	Left heated seat warning light
10	G	+12V for lighting
11	A	+12V from key (+15) general instrument supply
12	N	General instrument earth
13	MB	+12V from battery (+30) instrument supply
14	Z	Dimmer earth for info-center
15	NZ	Dimmer earth
16	VN	LANCIA CODE warning light
17	HN	Boot lid release enabling
18	BV	Coolant overheating warning light
19	CN	Heated rear windscreen warning light (IGE control unit)
20	LG	Cruise control direction indicator

CONNECTOR B		
Terminal No.	**Cable colour**	**Circuit concerned**
1	ZN	To the automatic transmission control unit (pin 49)
2	RV	To the automatic transmission control unit (pin 16)
3	HL	To the automatic transmission control unit (pin 31)
4	BN	To the automatic transmission control unit (pin 33Z)
5	G	To the automatic transmission control unit (pin 14Y)
6	V	To the automatic transmission control unit (pin 50X)
7	HB	Automatic transmission fluid overheating
8	HN	Automatic transmission failure
9	CB	Serial line for AISIN gearbox
10	-	Sport Tronic
11	A	Signal for ideogram "P"
12	B	Signal for ideogram "R"
13	C	Signal for ideogram "N"
14	H	Signal for ideogram "D"
15	L	Signal for ideogram "3"
16	S	Signal for ideogram "2"
17	M	Signal for ideogram "1"
18	N	Light earth
19	R	+12V (+15 key)
20	GR	+12V (lighting)

3U110L

Copyright by Fiat Auto

55.

CONNECTOR C		
Terminal No.	**Cable colours**	**Circuit concerned**
1	A	Alternator warning light (12V)
2	HN	Minium engine oil pressure warning light
3	B	Alternator warning light (+D)
4	-	Not connected
5	HV	Heated rear windscreen enabling
6	S	Warning light for seat belts
7	BR	Line L for diagnostic equipment
8	AB	Line K for diagnostic equipment
9	-	Not connected
10	-	Not connected
11	-	Not connected
12	-	Not connected
13	-	Not connected
14	-	Not connected
15	MN	Repetition of speedometer signal
16	-	Not connected
17	-	Not connected
18	-	Not connected
19	MB	Repetition of speedometer signal
20	GR	+12V lights from dimmer

CONNECTOR D		
Terminal No.	**Cable colour**	**Circuit concerned**
1	MB	Heater plugs warning light (for Diesel Version)
2	AB	Air Bag system failure warning light
3	-	Antispin/Traction Control failure warning light
4	LB	Right direction indicator warning light
5	LN	ABS failure warning light
6	AN	Insufficient brake fluid warning light
7	BR	Handbrake warning light (from I.G.E. control unit)
8	MG	Earth (fuel level)
9	AG	Signal (fuel level)
10	-	Not connected
11	-	Not connected
12	AR	Rev counter signalrepetition (to Infocenter)
13	A	Rev counter signal
14	GN	Speedometer signal (ABS control unit)
15	-	Not connected
16	-	Not connected
17	-	Not connected
18	-	Not connected
19	VN	Radiator coolant temperature sensor (return)
20	V	Radiator coolant temperature sensor (signal)

3U120L

WIRING DIAGRAM (1998 20v version)

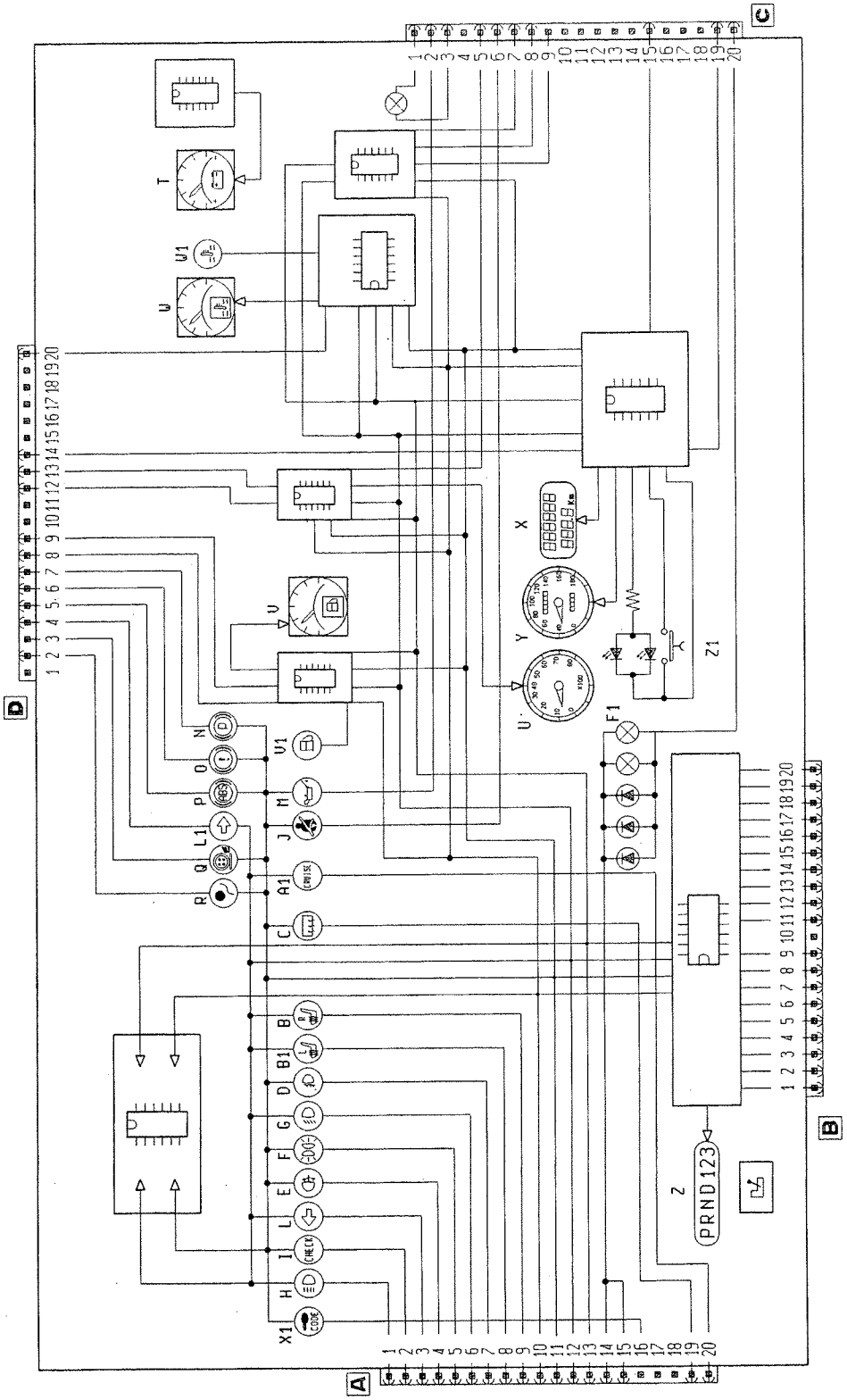

Key overleaf

P3U13OL01

3U13OL

55.

MAIN WIRING DIAGRAM

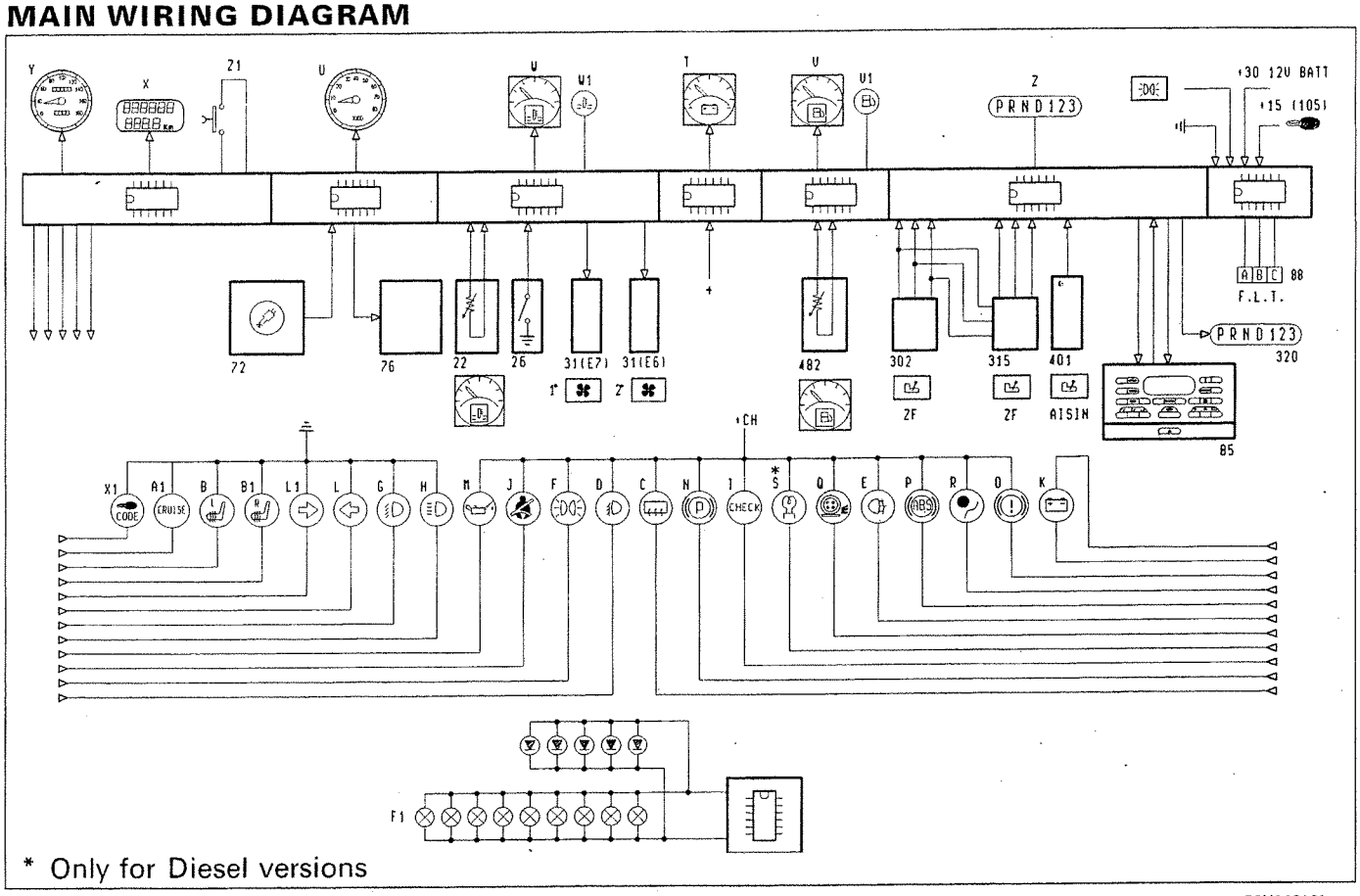

P3U140L01

22 Engine coolant temperature sender unit
26 Three stage pressure switch
31 Peripheral control unit (Engine compartment)
72 Fuel injection control unit
76 I.G.E. control unit
78 Instrument panel:
- A1 Cruise control failure warning light
- B Driver's side heated seat warning light
- B1 Passenger's side heated seat warning light
- C Heated rear windscreen warning light
- D Fog lights warning light
- E Rear fog lamps warning light
- F Side lights warning light
- F1 Instrument panel light bulbs
- G Dipped headlamps warning light
- H Main beam headlamps warning light
- I Check summary warning light
- L Left direction indicator warning light
- L1 Right direction indicator warning light
- J Warning light signalling seat belt fastened
- K Battery recharging warning light
- M Insufficient engine oil pressure warning light
- N Handbrake warning light/I.G.E. control unit
- O Insufficient brake fluid level warning light
- P Anti-lock braking system failure warning light (A.B.S.)
- Q Antispin/Traction control system failure warning light
- R AIR-BAG failure warning light
- S Heater plugs warning light (Diesel versions only)
- T Volmeteter
- U Electronic rev counter
- V Fuel gauge
- V1 Fuel reserve warning light
- X Milometer/trip meter display
- X1 LANCIA-CODE failure warning light
- Y Electronic tachometer
- W Water temperature gauge
- W1 Engine coolant overheating warning light
- Z Electronic automatic transmission gear selection display
- Z1 Trip computer zeroing button

85 Infocenter control unit
88 Diagnostic socket
302 Switch control unit (automatic transmission)
315 Electronic automatic transmission gear selector control unit (ZF)
320 Trim on automatic transmission gear selector lever
401 Electronic automatic transmission gear selector control unit (Aisin)
482 Fuel gauge

3U140L

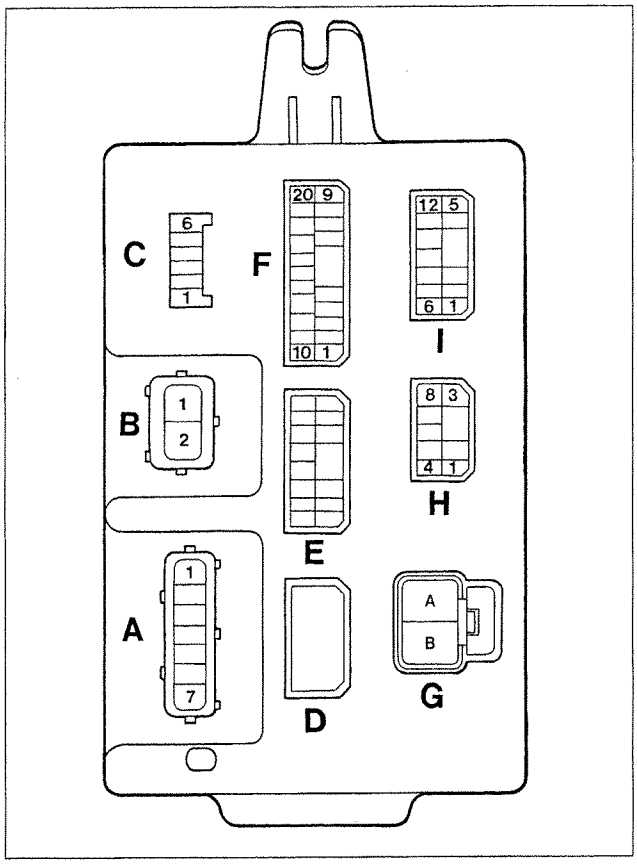

P3U15OL01

LOCATION OF COMPONENTS IN JUNCTION UNIT

Location of connectors in control unit

It is not possible to connect the connectors incorrectly because they are each a special shape. The connector identification letters as the same as those in the wiring diagrams.

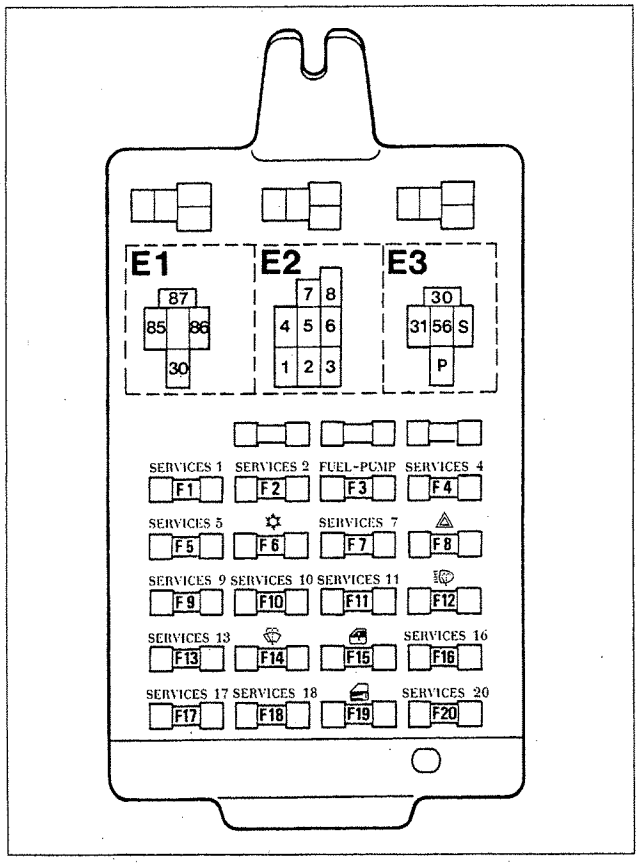

P3U15OL02

3U15OL

Location of fuses and relays in control unit

E1. Starting switch discharge relay.
E2. Direciton indicators/hazard warning lights intermittent device.
E3. Headlamp washer timer.

55.

DESCRIPTION OF CABLES AND CONNECTORS

CONNECTOR A		
Terminal No.	**Cable colour**	**Circuit concerned**
1	R	Interior lights
2	-	Free
3	GN	Sun roof
4	-	Reserve
5	GV	Windscreen wash-/wipe
6	RN	Front electric windows supply
7	S	Central locking and fuel filler lock

CONNECTOR B		
Terminal No.	**Cable colour**	**Circuit concerned**
1	R	Climate control system
2	A	+15 ignition switch

CONNECTOR C		
Terminal No.	**Cable colour**	**Circuit concerned**
1	H	Electric fuel pump
2	S	Reversing lights
3	AB	Right rear direction indicator
4	AN	Left rear direction indicator
5	RN	Amplifier for aerial
6	RV	Rearscreen wiper relay feed (*)

* Only valid for S.W. versions

CONNECTOR D
NOT USED

CONNECTOR E		
Terminal No.	**Cable colour**	**Circuit concerned**
1	-	Free
2	-	Free
3	AR	Operation of right direction indicators
4	AN	Left direction indicator warning light
5	-	Reserve
6	AG	Operation of left direction indicators
7		Free
8	N	Emergency supply for alarm
9	M	+15 from ignition switch (radio position)
10	RV	Infocenter controls lights; electro-chromic interior mirror; infra red receiver sensor; passenger sun visor light; signal for electric rear windows inhibitor relay.
11	AV	Operation of hazard warning lights
12	-	Free
13	LG	Trailer direction indicators warning light
14	LB	Right direction indicator warning light

3U16OL

CONNECTOR F		
Terminal No.	**Cable colour**	**Circuit concerned**
1	-	Free.
2	RN	Compressor/heater pads/electric seats relays.
3	B	Luggage compartment release relay
4	RG	Folding, electric external mirros; electronic automatic transmission.
5	-	Free.
6	NL	Reversing light signal for electro-chromic mirror.
7	AB	Right side direction indicator.
8	RB	Dashboard (Infocenter; servotronic control unit).
9	GV	Gear selector; solenoid valve unit
10	-	Free.
11	S	Lancia CODE control unit.
12	-	Free.
13	-	Free.
14	-	Spare.
15	N	Headlamp washer timer earth; hazard warning light bulb.
16	R	Radio.
17	HV	Dipped headlamp signal for headlamp washer timer
18	GR	Infra red receiver.
19	M	Siren and LED for alarm.
20	RV	Signal from windscreen washers for headlamp washer timer.

CONNECTOR G		
Terminal No.	**Cable colour**	**Circuit concerned**
1	R	+30 Battery not protected by IGE control unit.
2	R	+30 Battery.

CONNECTOR H		
Terminal No.	**Cable colour**	**Circuit concerned**
1	-	Free.
2	-	Free.
3	MB	Infocenter supply; instrument panel; radio; automatic transmission.
4	-	Free.
5	BR	Operation of reversing lights from automatic transmission.
6	VN	Operation of braking lights.
7	V	Brake lights supply.
8	RB	Cigar lighter.

CONNECTOR I		
Terminal No.	**Cable colour**	**Circuit concerned**
1	RN	Relay excluding consumers during starting.
2	-	Free.
3	-	Free.
4	HR	Operation of reversing light.
5	-	Reserve.
6	-	Free.
7	BR	Operation of reversing light.
8	VN	Headlamp washer pump.
9	H	Fuel pump.
10	A	Right front direction indicator.
11	L	Left side direction indicator.
12	AN	Left front direction indicator.

3U170L

Copyright by Fiat Auto

55.

LIST OF FUSES AND MAIN CIRCUITS PROTECTED

Fuse No.	Amp.	Ideo-gram	Circuit protected	Fuse No.	Amp.	Ideo-gram	Circuit protected
1	15	Services 1	Switch signal to I.G.E. control unit. for brake lights fuse; brake lights; brake lights signal for ABS-automatic transmission; i.e. system for turbo diesel.	5	10	Services 5	Heated electric mirrors; heated, folding electric mirrors control unit; electronic automatic transmission.
				6	30		Climate control system.
				7	15	Services 7	Radio; electric aeriel; front cigar lighter.
2	5	Services 2	I.G.E. control unit signal for dipped headlamps operation;main beam headlamps relay; instrument panel; fog lights/rear fog lamps operation warning light; Infocenter. Instrument panel light dimmer; exterior lights switch; heater pads switch light; electric mirrors switch light; front cigar lighter light; ashtray light; headlamp alignment control light; Radio; Electric windows. Electro-chromic rear view mirror; signalling instrument for timer; electric windows inhibitor control light; infra red receiver signal; passenger sun visor light.	8	10		+Direction indicators/-hazard warning lights system battery
				9	5	Services 9	Relay for comprerror/relay operation for electric seat heater pads
				10	5	Services 10	Boot release electro-mechanical relay
				11	25	Services 11	+Battery
				12	20		+Battery; Headlamp washer system
				13	25	Services 13	Sun roof-reversing lights-reversing lights signal for electro-chromic mirror
				14	25		Windscreen wash/wipe
				15	25		Motors for left and right electric front windows
				16	15	Services 16	Rearscreen wash/wipe-Infocenter; Air Bag system; I.G.E. contro unit signal - signal to electric front windows control unit - signal to electric rear windows control unit - Servotronic control unit; electric pump for rearscreen washer; C.A. acoustic signal.
3	15	Fuel Pump	Fuel pump; key position.	17	5	Services 17	+Battery; Infocenter; instrument panel; radio (security code); signal for automatic transmission; acoustic signal for automatic transmission.
4	10	Services 4	+Battery; 4 lights; 2 floor lights; left and right rear courtesy light; boot light; glove compartment light; front courtesy light; timer for front courtesy light.	18	5	Services 18	+Battery; Siren for alarm; receiver for alarm; LED for alarm.
				19	25		Motors for locking doors; motor for fuel filler release.
				20	5	Services 20	+Battery; Lancia CODE.

3U180L

INTRODUCTION'

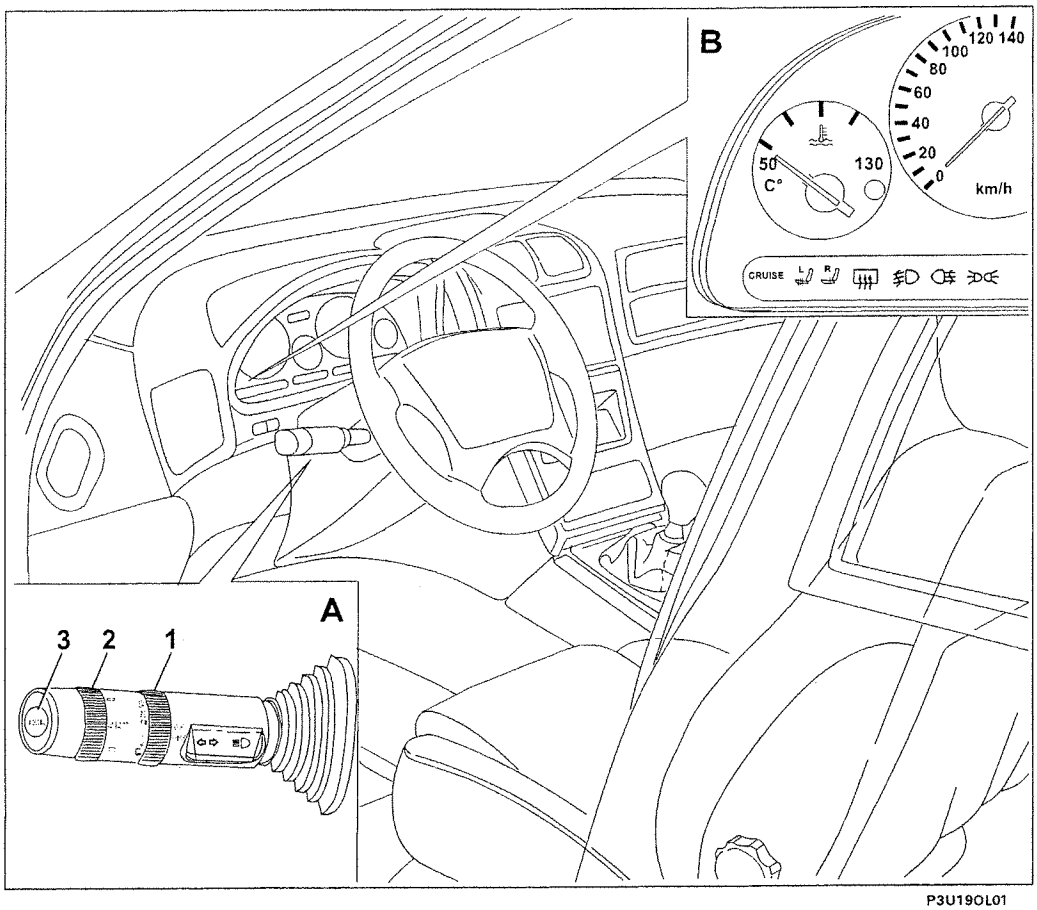

P3U19OL01

A. Speed regulator control lever (cruise control)
B. Cruise control on warnin light

- This is an electronic system managed by the injection control unit which allows a cruising speed set by the driver to be maintained.
- The control unit implements the control of the speed through the motorized butterfly; the operation of the cruise control is integrated in the direction indicators control lever in the steering column switch unig.

The operation consists of:
- a switch and ring nut (1);
- a SET ring nut (2) with a programming function: speed increase (set+) and speed decrease (set-);
- an RCL button (3) for recalling the speed programmed.

To activate the operation of the cruise control:
- place the switch in the ON position;
- let the vehicle reach the desired speed (more than 30 Km/h);
- turn the SET ring nut towards the (+) or (-) sign;
- release the accelerator pedal.

The cruise control can operate in the entire engine rev range for both automatic and manual transmission versions.
The cruise control does not operate:
- in 1st speed or reverse with manual gearboxes;
- in P,N or R with automatic transmission (where fitted);
- below 30 Km/h.

Turning the switch to the OFF position cancels any speed previously set.

A warning light in the instrument panel, activated by the injection control unit, indicates whether the system is operating or deactivated.

3U19OL

55.

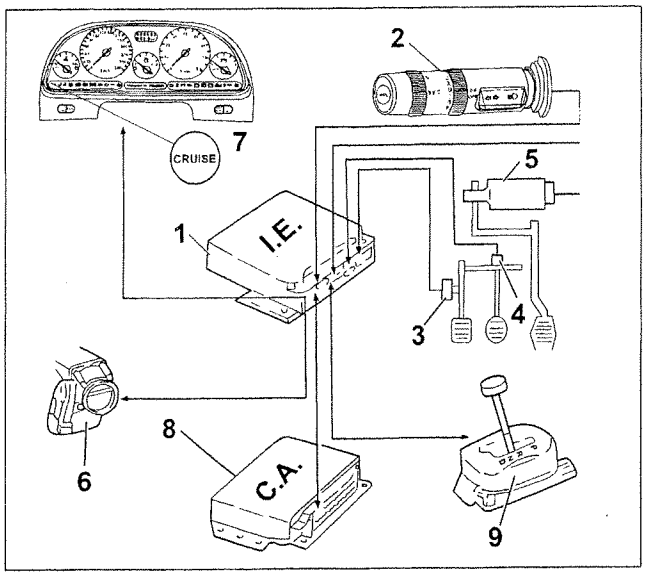

P3U19OL01

1. Injection/ignition control unit
2. Cruise control lever
3. Clutch pedal switch
4. Brake pedal switch
5. Accelerator pedal potentiometer
6. Butterfly casing memorized
7. Cruise control warning light
8. Automatic transmission control unit (where fitted)
9. Automatic transmission selector lever position (where fitted)

Manual switching off of cruise control

The user can disable the cruise control by:
- turning the switch to the OFF position;
- switching off the engine;
- operating the brake or clutch pedals (the last speed reached remains memorized and can be recalled by pressing the RCL button);
- operating the automatic transmission selector lever in the P, N, R, position (the last speed reached remains memorized and can be recalled by pressing the RCL button);
- vehicle speed below 30 Km/h (the last butterfly angle and the speed reached remains memorized and can be recalled by pressing the RCL button);
- operating the accelerator pedal.

NOTE *In this case, the cruise control remains on, but allows the management of the accelerator pedal.*

Automatic switching off of cruise control

The system automatically switches off the cruise control when there is:
- acceleration due to a steep descent;
- deceleration due to a steep ascent;
- operation of the gear selector lever without using the clutch.

The system automatically switchesoff the cruise control in the following failure conditions:
- failure of a sensor signal which implies the desire of the user to alter the driving conditions:
  - accelerator pedal potentiometer;
  - clutch switch;
  - brake switch;
  - brake lights switch;
  - cruise control RCL button;
  - cruise control SET ring nut.
- Failure at other system sensors or components:
  - injection/ignition control unit;
  - engine rpm sensor;
  - vehicle speed;
  - automatic transmission selector lever position switch (where fitted).
- Control system failure of components which involve engine malfunction:

  - turbocharger sensors/actuators (where fitted);
  - motorized butterfly casing;
  - air flow meter;
  - engine ignition;
  - injectors.

3U20OL

page

- Electrical symbols 1
- Explanation of how to read wiring diagrams 4
- Wiring diagrams 5
- Diagrammatic views and location of cable looms and components 133
- Diagrammatic view of dashboard and location of cable looms and components 141
- Components key 143

Copyright by Fiat Auto

COPYRIGHT FIAT AUTO

The reproduction, even partial, of the text and illustrations is prohibited.

The information contained in this publication is purely indicative and could be out of date following modifications made by the Manufacturer, at any time, for technical or commercial reasons or in order to conform to legal requirements in the various countries.

Fiat Auto S.p.A.
D.M.C. - M.P.S.
Servizi Post Vendita - Tecnologie Assistenziali
Largo Senatore G.Agnelli, 5 - 10040 Volvera - To (Italia)
Publication no. 506.475/24 - Ottobre 1998 - 400
Printed by Satiz S.p.A. - Turin (Italy)
order no. 60446238

DESCRIPTION	1998
Versions without air conditioning Engine cooling - Water temperature gauge and overheating warning light	5
Versions with air conditioning Engine cooling - Water temperature gauge and overheating warning light	9
Preparation for middle of the range radio - Preparation for radio phone	15
Preparation for top of the range radio - Preparation for radio phone	19
Lancia CODE	23
Headlamp alignment - Electrically operated sun roof	29
Anti-lock brakes (A.B.S.)	31
Preparation for tow hook	33
Automatic heater	35
Starting - Motronic M2.7 electronic ignition and injection - Recharging and warning light - Insufficient engine oil pressure warning light - Injection system failure warning light	
Starting - Motronic 2.10.3 electronic injection and ignition - Recharging and warning light - Insufficient engine oil pressure warning light - Injection system failure warning light	
Starting - Motronic 2.10.3 electronic injection and ignition - Recharging and warning light - Insufficient engine oil pressure warning light - Injection system failure warning light	41
Version with automatic transmission Starting - Motronic 2.10.3 electronic injection and ignition - Recharging and warning light - Insufficient engine oil pressure warning light - Injection system failure warning light	43
Starting - Motronic electronic ignition and injection - Recharging and warning light - Insufficient engine oil pressure warning light - Injection system failure warning light	
Version with automatic transmission Starting - Motronic electronic ignition and injection - Recharging and warning light - Insufficient engine oil pressure warning light - Injection system failure warning light	
Starting - MSA11-310 fuel pump electronic control unit - Recharging and warning light - Insufficient engine oil pressure warning light - Injection system failure warning light - Heater plugs control unit and warning light	
Starting - Diesel injection pressure pump electronic control unit- Recharging and warning light - Insufficient engine oil pressure warning light - Injection system failure warning light - Heater plugs control unit and warning light	
Parking lights and warning lamp - Dipped headlamps and warning light - Main beam headlamps and warning light - Parking lights - Headlamp flasher - Number plate lights	53
Direction indicators and warning light - Hazard warning lights and warning light - Brake lights - Reversing lights	55
Fog lights and warning light - Rear fog lamps and warning light	59

Copyright by Fiat Auto

DESCRIPTION	Trim levels/Engine types																		
	Saloon							Station Wagon							Coupé			
	1998	1995T 16v	1998T 20v	2446	2959	2387 TD	2387 TD UNJET	1998	1995T 16v	1998T 20v	2446	2959	2387 TD	2387 TD UNJET	1995T 16v	1998T 20v	2446	2959
without air conditioning ooling - Water temperature gauge and overheating warning light	5	5	5	5	5	7	7	5	5	5	5	5	7	7	5	5	5	5
with air conditioning ooling - Water temperature gauge and overheating warning light	9	13	13	9	9	11	11	9	13	13	9	9	11	11	13	13	9	9
ion for middle of the range radio - Preparation for radio phone	15	15	15	15	15	15	15	17	17	17	17	17	17	17	15	15	15	15
ion for top of the range radio - Preparation for radio phone	19	19	19	19	19	19	19	21	21	21	21	21	21	21	19	19	19	19
OF	23	25	25	23	23	27	27	23	25	25	23	23	27	27	25	25	23	23
p alignment - Electrically operated sun roof	29	29	29	29	29	29	29	29	29	29	29	29	29	29	29	29	29	29
brakes (A.B.S.)	31	31	31	31	31	31	31	31	31	31	31	31	31	31	31	31	31	31
ion for tow hook	33	33	33	33	33	33	33	33	33	33	33	33	33	33	33	33	33	33
ic heater	35	35	35	35	35	35	35	35	35	35	35	35	35	35	35	35	35	35
- Motronic M2.7 electronic ignition and injection - Recharging and warning light - Insufficient engine ure warning light - Injection system failure warning light		37							37						37			
- Motronic 2.10.3 electronic injection and ignition - Recharging and warning light - Insufficient engine ure warning light - Injection system failure warning light			39							39						39		
- Motronic 2.10.3 electronic injection and ignition - Recharging and warning light - Insufficient engine ure warning light - Injection system failure warning light	41			41				41			41						41	
with automatic transmission - Motronic 2.10.3 electronic injection and ignition - Recharging and warning light - Insufficient engine u arning light - Injection system failure warning light	43			43				43			43						43	
- Motronic electronic ignition and injection - Recharging and warning light - Insufficient engine oil warning light - Injection system failure warning light					45							45						45
with automatic transmission - Motronic electronic ignition and injection - Recharging and warning light - Insufficient engine oil warning light - Injection system failure warning light					47							47						47
- MSA11-310 fuel pump electronic control unit - Recharging and warning light - Insufficient engine oil warning light - Injection system failure warning light - Heater plugs control unit and warning light						49							49					
- Diesel injection pressure pump electronic control unit- Recharging and warning light - Insufficient en-pressure warning light - Injection system failure warning light - Heater plugs control unit and warning							51							51				
lights and warning lamp - Dipped headlamps and warning light - Main beam headlamps and warning arking lights - Headlamp flasher - Number plate lights	53	53	53	53	53	53	53	53	53	53	53	53	53	53	53	53	53	53
indicators and warning light - Hazard warning lights and warning light - Brake lights - Reversing	55	55	55	55	55	55	55	57	57	57	57	57	57	57	55	55	55	55
ts ...d warning light - Rear fog lamps and warning light	59	59	59	59	59	59	59	59	59	59	59	59	59	59	59	59	59	59

DESCRIPTION	Trim levels/Engine types																		
	Saloon							Station Wagon							Coup				
	1998	1995T 16v	1998T 20v	2446	2959	2387 TD	2387 TD UNJET	1998	1995T 16v	1998T 20v	2446	2959	2387 TD	2387 TD UNJET	1995T 16v	1998T 20v			
Headlamp alignment with exhaust gas headlamps	132/15	132/15	132/15	132/15	132/15	132/15	132/15	132/15	132/15	132/15	132/15	132/15	132/15	132/15	132/15	132/15	1		
Parking lights and warning lamp - Exhaust gas dipped beam headlamps and warning light - Main beam headlamps and warning light - Parking lights - Headlamp flasher - Number plate lights	132/17	132/17	132/17	132/17	132/17	132/17	132/17	132/17	132/17	132/17	132/17	132/17	132/17	132/17	132/17	132/17	1		
Air-bag and failure warning light - Passenger presence sensor - Seat belt pretensioner - Servotronic device	132/19	132/19	132/19	132/19	132/19	132/19	132/19	132/19	132/19	132/19	132/19	132/19	132/19	132/19	132/19	132/19	1		
Driver's AIR-BAG and failure warning light - Seat belt pretensioners - Servotronic device	132/21	132/21	132/21	132/21	132/21	132/21	132/21	132/21	132/21	132/21	132/21	132/21	132/21	132/21	132/21	132/21	1		
Driver's AIR-BAG and failure warning light - Passenger presence sensor - Seat belt pretensioner - SIDE-BAG - Servotronic device	132/23	132/23	132/23	132/23	132/23	132/23	132/23	132/23	132/23	132/23	132/23	132/23	132/23	132/23	132/23	132/23	1		
Diagrammatic view of location of cable looms and components	135	133	134	135	137	139	140	135	133	134	135	137	139	140	133	134			
Version with automatic transmission Diagrammatic view of location of cable looms and components	136			136	138			136			136	138							
Diagrammatic view of location of cable looms and components	141	141	141	141	141	141	141	141	141	141	141	141	141	141	141	141			

Copyright by Fiat Auto

DESCRIPTION	19
Windscreen wash/wipe - Headlamp washer - Electric horns	6
Vehicle interior lights	6
Fuel gauge and reserve warning light - Handbrake warning light - Insufficient brake fluid level warning light - Seat belt unfastened warning light - Speedometer - Milometer/trip meter and zeroing button - Rev counter -Current socket- Voltmeter	7
Electric front windows	7
Electric rear windows	7
Ideogram lights - Heated rear windscreen and warning light	8
Electrically adjustable, heated and folding external rear view mirrors - Electro-chromic interior rear view mirror	8
Air Bag and failure warning light - Seat belt pretensioners - Servotronic device	8
Version with alarm Central locking and signalling doors open	8
Version without alarm Central locking and signalling doors open - Doors closed signalling device	9
Electric, heated front seats - Driver's seat with memory	9
Automatic climate control	9
Automatic gearbox (Aisin)	10
Automatic gearbox (ZF)	
Alarm device	10
Complete Infocenter	11
Complete I.G.E. control unit connections	12
Controlled damping suspension (S.C.S.)	12
Instrument panel connections	12
Junction unit (in dashboard)	13
Peripheral control unit (in engine compartment)	13
Preparation for middle of the range radio - Preparation for radio phone - Preparation for radio navigation system	132
Preparation for top of the range radio - Preparation for radio phone - Preparation for radio navigation system	132
LANCIA-CODE device	132

DESCRIPTION	Trim levels/Engine types																		
	Saloon							Station Wagon							Coupé				
	1998	1995T 16v	1998T 20v	2446	2959	2387 TD	2387 TD UNJET	1998	1995T 16v	1998T 20v	2446	2959	2387 TD	2387 TD UNJET	1995T 16v	1998T 20v	2446	2959
ısh/wipe - Headlamp washer - Electric horns	61	61	61	61	61	61	61	63	63	63	63	63	63	63	61	61	61	61
r lights	65	65	65	65	65	65	65	69	69	69	69	69	69	69	67	67	67	67
l reserve warning light - Handbrake warning light - Insufficient brake fluid level warning light - stened warning light - Speedometer - Milometer/trip meter and zeroing button - Rev counter -Cur- ɔltmeter	71	71	71	71	71	73	73	71	71	71	71	71	73	73	71	71	71	71
vindows	75	75	75	75	75	75	75	75	75	75	75	75	75	75	77	77	77	77
indows	79	79	79	79	79	79	79	79	79	79	79	79	79	79				
s - Heated rear windscreen and warning light	81	81	81	81	81	81	81	81	81	81	81	81	81	81	81	81	81	81
ustable, heated and folding external rear view mirrors - Electro-chromic interior rear view mirror	83	83	83	83	83	83	83	83	83	83	83	83	83	83	83	83	83	83
ilure warning light - Seat belt pretensioners - Servotronic device	85	85	85	85	85	85	85	85	85	85	85	85	85	85	85	85	85	85
larm g and signalling doors open	87	87	87	87	87	87	87	87	87	87	87	87	87	87	89	89	89	89
ıt alarm g and signalling doors open - Doors closed signalling device	91	91	91	91	91	91	91	91	91	91	91	91	91	91	93	93	93	93
d front seats - Driver's seat with memory	95	95	95	95	95	95	95	95	95	95	95	95	95	95	97	97	97	97
ıate control	99	99	99	99	99	101	101	99	99	99	99	99	101	101	99	99	99	99
rbox (Aisin)	103			103				103			103						103	
rbox (ZF)					105							105						105
	107	109	109	107	107	111	111	107	109	109	107	107	111	111	115	115	113	113
enter	117	117	117	117	117	119	119	117	117	117	117	117	119	119	121	121	121	121
. control unit connections	123	123	123	123	123	123	123	123	123	123	123	123	123	123	123	123	123	123
ıping suspension (S.C.S.)	125	125	125	125	125	125	125	125	125	125	125	125	125	125	125	125	125	125
ıel connections	127	127	127	127	127	129	129	127	127	127	127	127	129	129	127	127	127	127
in dashboard)	131	131	131	131	131	131	131	131	131	131	131	131	131	131	131	131	131	131
trol unit (in engine compartment)	132	132	132	132	132	132	132	132	132	132	132	132	132	132	132	132	132	132
middle of the range radio - Preparation for radio phone - Preparation for radio navigation system	132/1	132/1	132/1	132/1	132/1	132/1	132/1	132/3	132/3	132/3	132/3	132/3	132/3	132/3	132/1	132/1	132/1	132/1
top of the range radio - Preparation for radio phone - Preparation for radio navigation system	132/5	132/5	132/5	132/5	132/5	132/5	132/5	132/7	132/7	132/7	132/7	132/7	132/7	132/7	132/5	132/5	132/5	132/5
d- ice	132/9	132/11	132/11	132/9	132/9	132/13	132/13	132/9	132/11	132/11	132/9	132/9	132/13	132/13	132/11	132/11	132/9	132/9

Trim levels/Engine types															
oon				Station Wagon							Coupé				
46	2959	2387 TD	2387 TD UNJET	1998	1995T 16v	1998T 20v	2446	2959	2387 TD	2387 TD UNJET	1995T 16v	1998T 20v	2446	2959	
./15	132/15	132/15	132/15	132/15	132/15	132/15	132/15	132/15	132/15	132/15	132/15	132/15	132/15	132/15	
./17	132/17	132/17	132/17	132/17	132/17	132/17	132/17	132/17	132/17	132/17	132/17	132/17	132/17	132/17	
./19	132/19	132/19	132/19	132/19	132/19	132/19	132/19	132/19	132/19	132/19	132/19	132/19	132/19	132/19	
./21	132/21	132/21	132/21	132/21	132/21	132/21	132/21	132/21	132/21	132/21	132/21	132/21	132/21	132/21	
./23	132/23	132/23	132/23	132/23	132/23	132/23	132/23	132/23	132/23	132/23	132/23	132/23	132/23	132/23	
35	137	139	140	135	133	134	135	137	139	140	133	134	135	137	
36	138			136			136	138					136	138	
41	141	141	141	141	141	141	141	141	141	141	141	141	141	141	

55.

DESCRIPTION	1998
Versions without air conditioning Engine cooling - Water temperature gauge and overheating warning light	5
Versions with air conditioning Engine cooling - Water temperature gauge and overheating warning light	9
Preparation for middle of the range radio - Preparation for radio phone	15
Preparation for top of the range radio - Preparation for radio phone	19
Lancia CODE	23
Headlamp alignment - Electrically operated sun roof	29
Anti-lock brakes (A.B.S.)	31
Preparation for tow hook	33
Automatic heater	35
Starting - Motronic M 2.7 electronic ignition and injection - Recharging and warning light - Insufficient engine oil pressure warning light - Injection system failure warning light	
Starting - Motronic 2.10.3 electronic injection and ignition - Recharging and warning light - Insufficient engine oil pressure warning light - Injection system failure warning light	
Starting - Motronic 2.10.3 electronic injection and ignition - Recharging and warning light - Insufficient engine oil pressure warning light - Injection system failure warning light	41
Version with automatic transmission Starting - Motronic 2.10.3 electronic injection and ignition - Recharging and warning light - Insufficient engine oil pressure warning light - Injection system failure warning light	43
Starting - Motronic electronic ignition and injection - Recharging and warning light - Insufficient engine oil pressure warning light - Injection system failure warning light	
Version with automatic transmission Starting - Motronic electronic ignition and injection - Recharging and warning light - Insufficient engine oil pressure warning light - Injection system failure warning light	
Starting - MSA11-310 fuel pump electronic control unit - Recharging and warning light - Insufficient engine oil pressure warning light - Injection system failure warning light - Heater plugs control unit and warning light	
Starting - Diesel injection pressure pump electronic control unit - Recharging and warning light - Insufficient engine oil pressure warning light - Injection system failure warning light - Heater plugs control unit and warning light	
Side lights and warning light - Dipped headlamps and warning light - Main beam headlamps and warning light - Parking lights - Headlamp flasher - Number plate lights	53
Direction indicators and warning light - Hazard warning lights and warning light - Braking lights - Reversing lights	55
Fog lights and warning light - Rear fog lamps and warning light	59

Copyright by Fiat Auto

DESCRIPTION	Trim levels/Engine types																		
	Saloon							Station Wagon							Coupé				
	1998	1995T 16v	1998T 20v	2446	2959	2387 TD	2387 TD UNJET	1998	1995T 16v	1998T 20v	2446	2959	2387 TD	2387 TD UNJET	1995T 16v	1998T 20v	2446	2959
s without air conditioning cooling - Water temperature gauge and overheating warning light	5	5	5	5	5	7	7	5	5	5	5	5	7	7	5	5	5	5
s with air conditioning cooling - Water temperature gauge and overheating warning light	9	13	13	9	9	11	11	9	13	13	9	9	11	11	13	13	9	9
tion for middle of the range radio - Preparation for radio phone	15	15	15	15	15	15	15	17	17	17	17	17	17	17	15	15	15	15
tion for top of the range radio - Preparation for radio phone	19	19	19	19	19	19	19	21	21	21	21	21	21	21	19	19	19	19
COUPÉ	23	25	25	23	23	27	27	23	25	25	23	23	27	27	25	25	23	23
np alignment - Electrically operated sun roof	29	29	29	29	29	29	29	29	29	29	29	29	29	29	29	29	29	29
k brakes (A.B.S.)	31	31	31	31	31	31	31	31	31	31	31	31	31	31	31	31	31	31
tion for tow hook	33	33	33	33	33	33	33	33	33	33	33	33	33	33	33	33	33	33
tic heater	35	35	35	35	35	35	35	35	35	35	35	35	35	35	35	35	35	35
- Motronic M 2.7 electronic ignition and injection - Recharging and warning light - Insufficient engine sure warning light - Injection system failure warning light		37							37						37			
- Motronic 2.10.3 electronic injection and ignition - Recharging and warning light - Insufficient engine sure warning light - Injection system failure warning light			39							39						39		
- Motronic 2.10.3 electronic injection and ignition - Recharging and warning light - Insufficient engine sure warning light - Injection system failure warning light	41			41				41			41						41	
with automatic transmission - tronic 2.10.3 electronic injection and ignition - Recharging and warning light - Insufficient engine sure warning light - Injection system failure warning light	43			43				43			43						43	
- Motronic electronic ignition and injection - Recharging and warning light - Insufficient engine oil e warning light - Injection system failure warning light					45							45						45
with automatic transmission - Motronic electronic ignition and injection - Recharging and warning light - Insufficient engine oil e warning light - Injection system failure warning light					47							47						47
- MSA11-310 fuel pump electronic control unit - Recharging and warning light - Insufficient engine oil e warning light - Injection system failure warning light - Heater plugs control unit and warning light						49							49					
- Diesel injection pressure pump electronic control unit - Recharging and warning light - Insufficient il pressure warning light - Injection system failure warning light - Heater plugs control unit and warn- t							51							51				
hts and warning light - Dipped headlamps and warning light - Main beam headlamps and warning light - lights - Headlamp flasher - Number plate lights	53	53	53	53	53	53	53	53	53	53	53	53	53	53	53	53	53	53
n indicators and warning light - Hazard warning lights and warning light - Braking lights - Reversing	55	55	55	55	55	55	55	57	57	57	57	57	57	57	55	55	55	55
hts and warning light - Rear fog lamps and warning light	59	59	59	59	59	59	59	59	59	59	59	59	59	59	59	59	59	59

DESCRIPTION	Trim levels/Engine types																	
	Saloon							Station Wagon							Coupé		
	1998	1995T 16v	1998T 20v	2446	2959	2387 TD	2387 TD UNJET	1998	1995T 16v	1998T 20v	2446	2959	2387 TD	2387 TD UNJET	1995T 16v	1998T 20v	2446
Windscreen wash/wipe - Headlamp washer - Electric horns	61	61	61	61	61	61	61	63	63	63	63	63	63	63	61	61	61
Vehicle interior lights	65	65	65	65	65	65	65	69	69	69	69	69	69	69	67	67	67
Fuel level gauge and reserve warning light - Handbrake warning light - Insufficient brake fluid level warning light - Seat belt unfastened warning light - Speedometer - Milometer/trip meter and zeroing button - Rev counter -Current socket- Voltmeter	71	71	71	71	71	73	73	71	71	71	71	71	73	73	71	71	71
Electric front windows	75	75	75	75	75	75	75	75	75	75	75	75	75	75	77	77	77
Electric rear windows	79	79	79	79	79	79	79	79	79	79	79	79	79	79			
Ideogram lights - Heated rear windscreen and warning light	81	81	81	81	81	81	81	81	81	81	81	81	81	81	81	81	81
Electrically adjustable, heated, folding external rear view mirrors - Electro-chromic interior rear view mirror	83	83	83	83	83	83	83	83	83	83	83	83	83	83	83	83	83
Air-Bag and failure warning light - Seat belt pretensioners - Servotronic device	85	85	85	85	85	85	85	85	85	85	85	85	85	85	85	85	85
Version with alarm Central locking and signalling doors open	87	87	87	87	87	87	87	87	87	87	87	87	87	87	89	89	89
Version without alarm Central locking and signalling doors open - Doors locked control device	91	91	91	91	91	91	91	91	91	91	91	91	91	91	93	93	93
Electric, heated front seats - Driver's seat with memory	95	95	95	95	95	95	95	95	95	95	95	95	95	95	97	97	97
Automatic climate control	99	99	99	99	99	101	101	99	99	99	99	99	101	101	99	99	99
Automatic transmission (Aisin)	103			103				103			103						103
Automatic transmission (ZF)					105							105					
Alarm device	107	109	109	107	107	111	111	107	109	109	107	107	111	111	115	115	113
Complete Inforcenter	117	117	117	117	117	119	119	117	117	117	117	117	119	119	121	121	121
I.G.E. control unit connections	123	123	123	123	123	123	123	123	123	123	123	123	123	123	123	123	123
Controlled damping suspension (S.C.S.)	125	125	125	125	125	125	125	125	125	125	125	125	125	125	125	125	125
Instrument panel connections	127	127	127	127	127	129	129	127	127	127	127	127	129	129	127	127	127
Junction unit (in dashboard)	131	131	131	131	131	131	131	131	131	131	131	131	131	131	131	131	131
Peripheral control unit (in engine compartment)	132	132	132	132	132	132	132	132	132	132	132	132	132	132	132	132	132
Diagrammatic view of location of cable looms and components	135	133	134	135	137	139	140	135	133	134	135	137	139	140	133	134	135
Version with automatic transmission Diagrammatic view of location of cable looms and components	136			136	138			136			136	138					136
Diagrammatic view of location of cable looms and components	141	141	141	141	141	141	141	141	141	141	141	141	141	141	141	141	141

Trim levels/Engine types													
			Station Wagon							Coupé			
59	2387 TD	2387 TD UNJET	1998	1995T 16v	1998T 20v	2446	2959	2387 TD	2387 TD UNJET	1995T 16v	1998T 20v	2446	2959
1	61	61	63	63	63	63	63	63	63	61	61	61	61
5	65	65	69	69	69	69	69	69	69	67	67	67	67
1	73	73	71	71	71	71	71	73	73	71	71	71	71
5	75	75	75	75	75	75	75	75	75	77	77	77	77
9	79	79	79	79	79	79	79	79	79				
1	81	81	81	81	81	81	81	81	81	81	81	81	81
3	83	83	83	83	83	83	83	83	83	83	83	83	83
5	85	85	85	85	85	85	85	85	85	85	85	85	85
7	87	87	87	87	87	87	87	87	87	89	89	89	89
1	91	91	91	91	91	91	91	91	91	93	93	93	93
5	95	95	95	95	95	95	95	95	95	97	97	97	97
9	101	101	99	99	99	99	99	101	101	99	99	99	99
			103			103						103	
05							105						105
07	111	111	107	109	109	107	107	111	111	115	115	113	113
17	119	119	117	117	117	117	117	119	119	121	121	121	121
23	123	123	123	123	123	123	123	123	123	123	123	123	123
25	125	125	125	125	125	125	125	125	125	125	125	125	125
27	129	129	127	127	127	127	127	129	129	127	127	127	127
31	131	131	131	131	131	131	131	131	131	131	131	131	131
32	132	132	132	132	132	132	132	132	132	132	132	132	132
37	139	140	135	133	134	135	137	139	140	133	134	135	137
38			136			136	138					136	138
41	141	141	141	141	141	141	141	141	141	141	141	141	141

Electrical symbols

 Positions	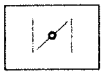 Cold starting (choke)	 Switch discharge
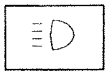 Main beam headlamps	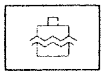 Water in fuel filter	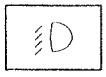 Dipped headlamps
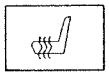 Heated seat	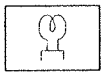 Heater plugs	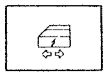 Direction indicators signalling with central locking
 Seat belts	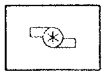 Turbocharger pressuree	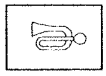 Electric horns
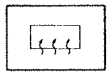 Heated rear wind-screen	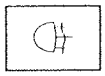 Rear fog lamp	 Left direction indicator
 Handbrake applied and insufficient brake fluid level	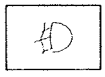 Fog lamps	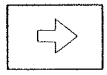 Right direction indica-tor
 A.B.S.	 Brake pad wear	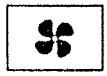 Engine cooling
 Hazard warning lights	 Turbocharger pressure	 Windscreen wiper
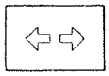 Direction indicators	 Automatic gearbox oil temperature	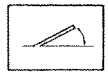 Electrically operated sun roof
 Handbrake applied and insufficient brake fluid level	 Speed limits	 Catalytic silencer tem-perature
 Recharging	 Fuel level	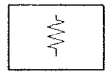 Resistance
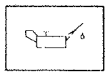 Engine oil pressure	 Engine coolant temperature	 Diode

P3U001I01

Copyright by Fiat Auto

Electrical symbols


Warning light

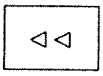
Trip computer control

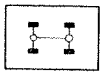
Differential lock


Bulb


Electronic injection

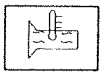
Automatic gearbox oil temperature

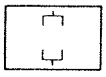
Fuse


Engine oil level

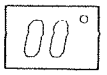

Temperature

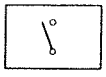
Switch open



Brake fluid level (Japanese version)


Anti-theft device

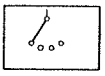
Selector switch


Doors open


Electric windows

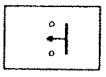
Button open


Central locking

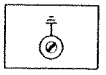
Earth

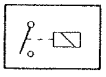
Switch operated by coil (Relay)



Sport Function controlled damping suspension

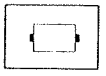
Number plate lights



Motor


Transistor

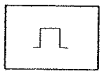
Impulse generator (Timer)

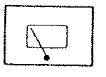
Rearscreen wiper

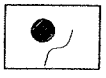
Air-Bag

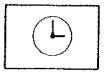
Analogue clock

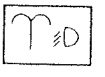
Headlamp washer



A.B.S. (Japanese Version)

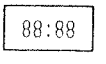

Digital clock

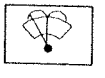
Windscreen wash/wipe



Brake light failure


Speedometer


Rearscreen wash/wipe


Windscreen wiper


Rev counter

P3U002I01

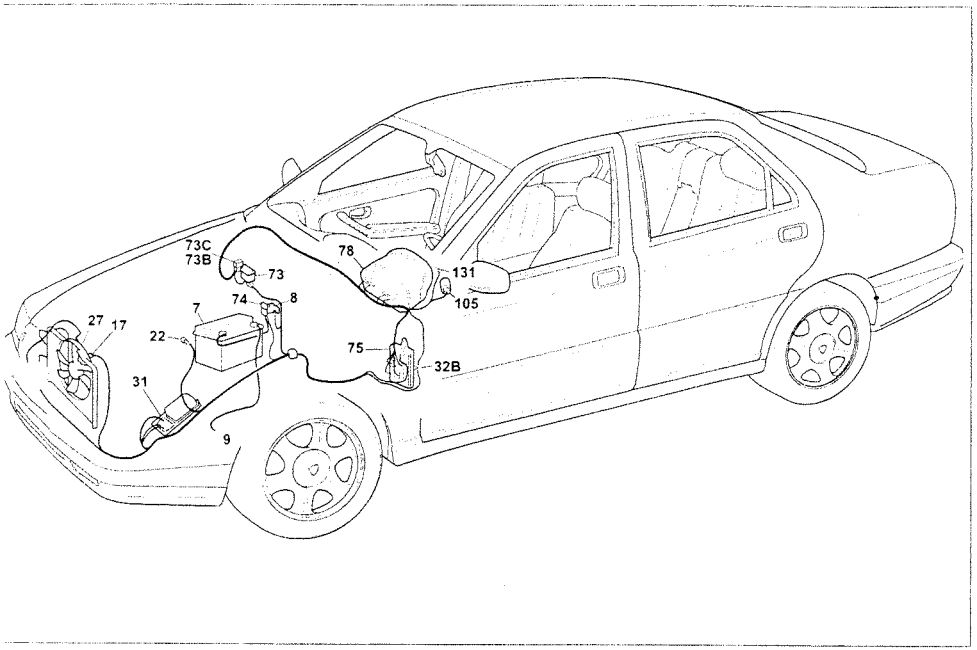

P3U007I01

'ersion without air conditioning
ngine cooling - Water temperature gauge and overheating warning light

:on..,.onents key

7 Battery
8 Main connector block
9 Earth on bodyshell
17 1st Engine cooling fan
22 Engine coolant temperature sender unit
27 Right front earth
31 Peripheral control unit (engine compartment)
32B Connection between dashboard and left engine compartment cables
73 Secondary connector block
73B 60A protective fuse for I.G.E. control unit / junction unit
73C 30A fuse protecting ignition switch / alarm device
74 80A fuse protecting peripheral control unit (engine compartment)
75 Junction unit (dashboard)
78 Instrument panel
W Water temperature gauge
W1 Engine coolant overheating warning light
105 Ignition switch
131 Earth on steering column support

D Ultrasound welding taped in cable loom

0071

32B Connection between dashboard and left engine compartment cables

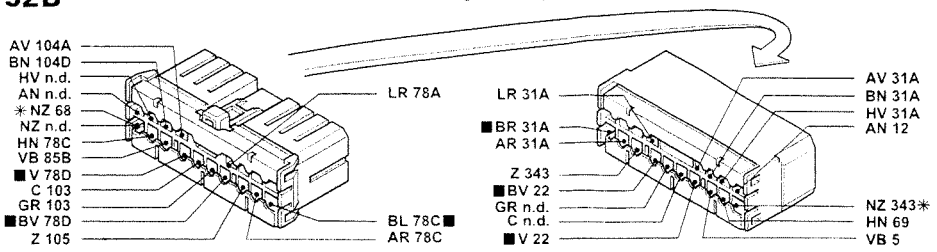

* Variant connection for 1998/2446/2959 versions with automatic transmission

75G Junction unit (dashboard)

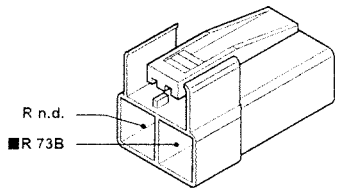

75H Junction unit (dashboard)

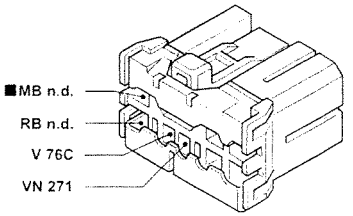

78A Trailer direction indicator warning light

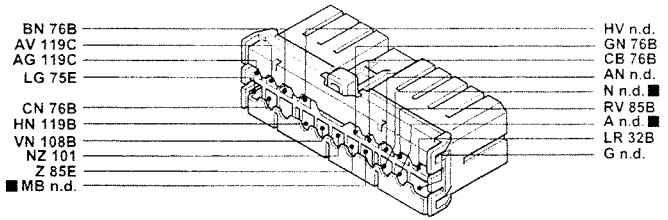

78C Heated rear windscreen warning light

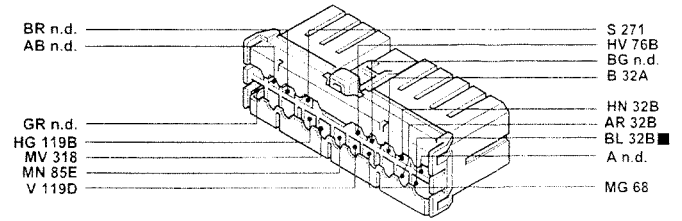

P3U008I01

■ The cables in the wiring diagram are marked

Petrol versions without air conditioning

Engine cooling - Water temperature gauge and overheating warning light - (See key at end of wiring diagrams)

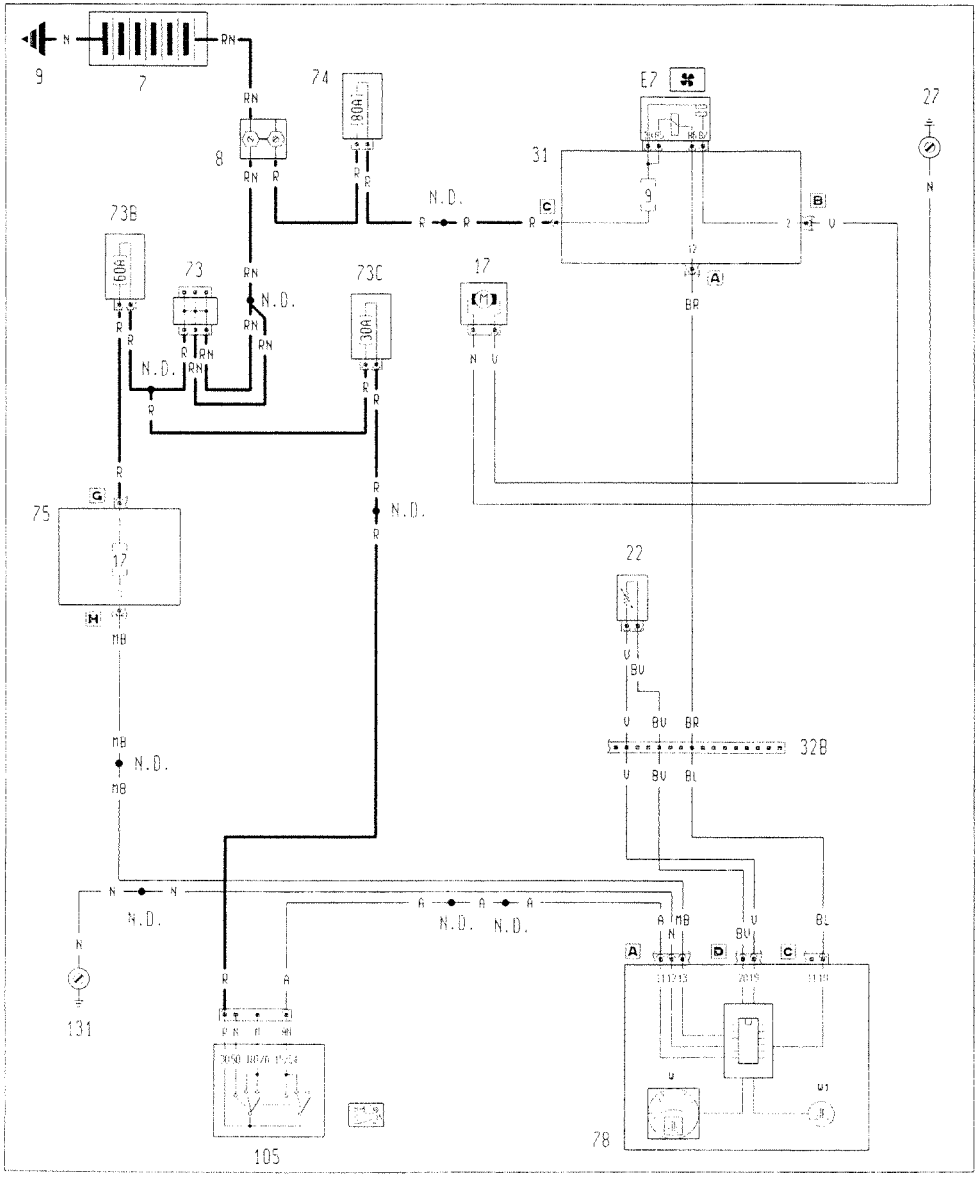

3U005I

Location of components

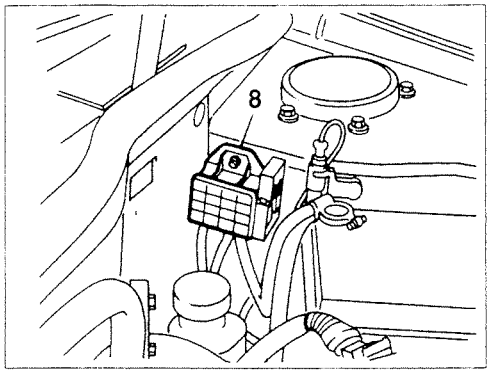

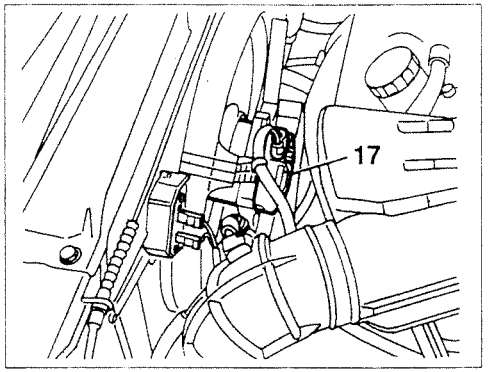

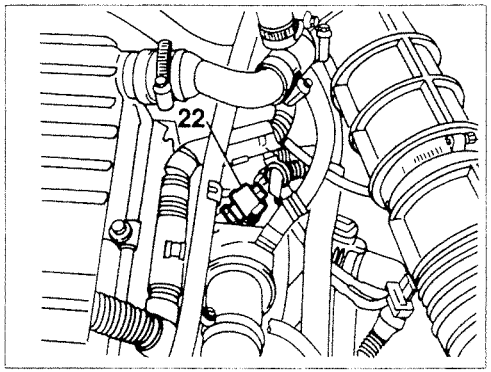

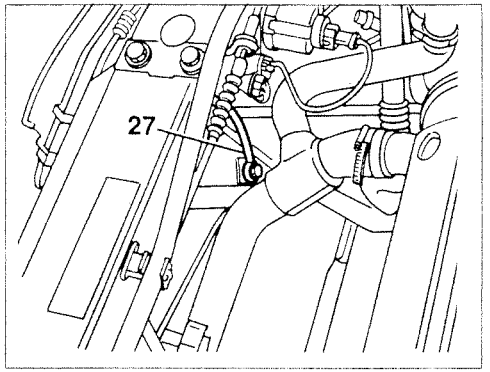

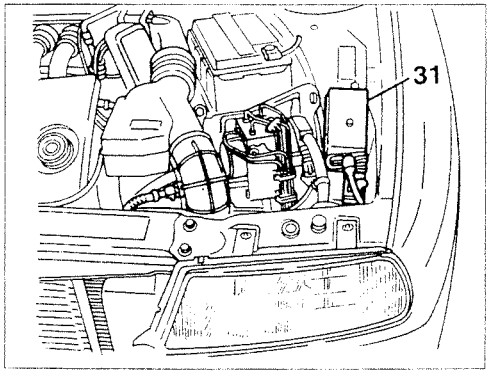

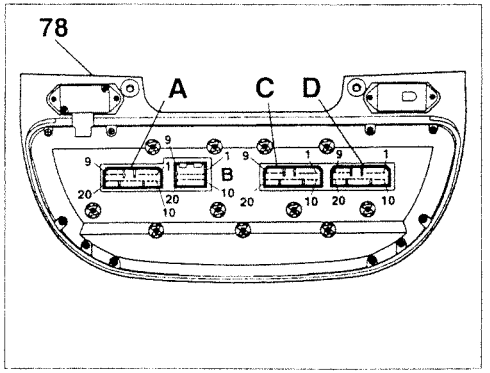

P3U006I01

TD versions without air conditioning

Engine cooling - Water temperature gauge and overheating warning light - (See key at end of wiring diagrams)

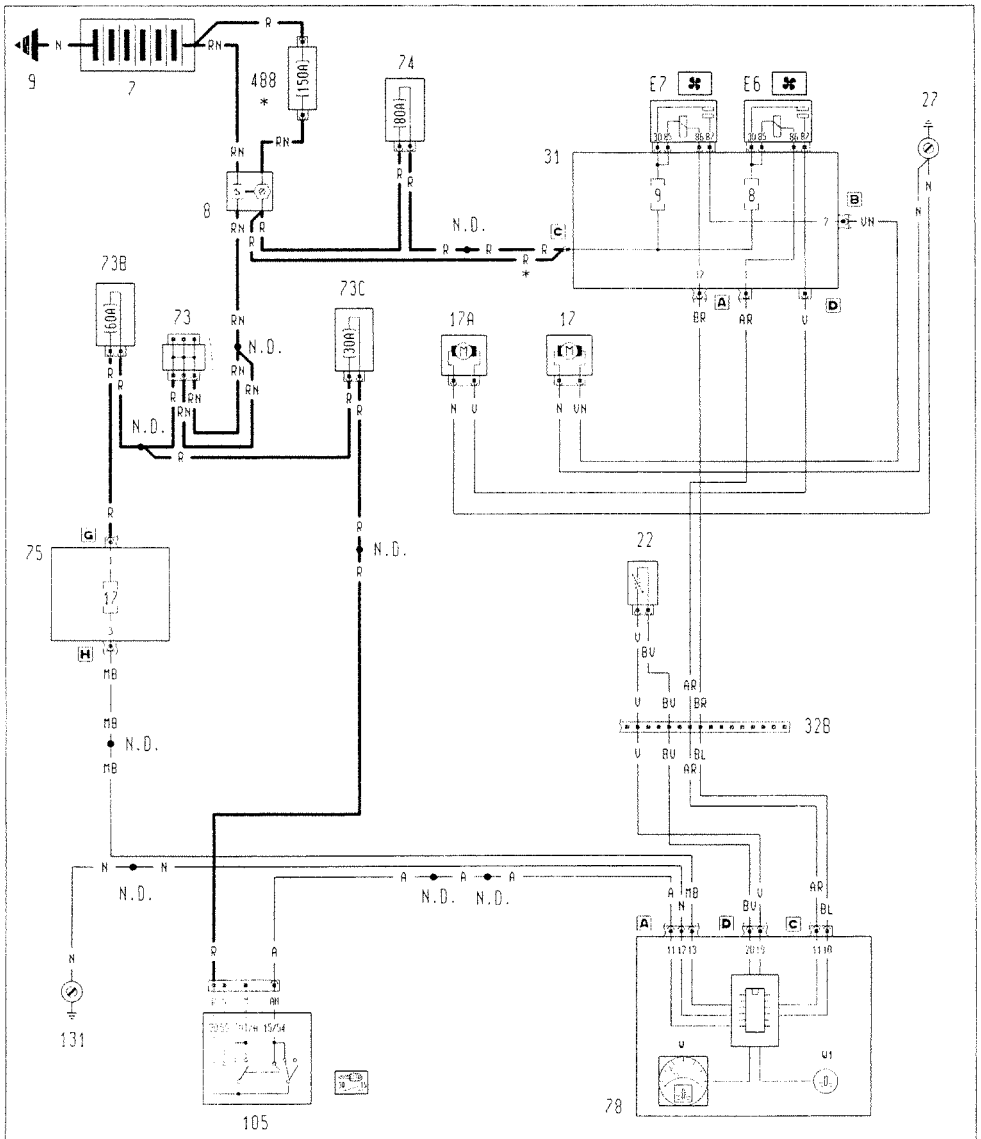

P3U06IZ01

3U009I

Location of components

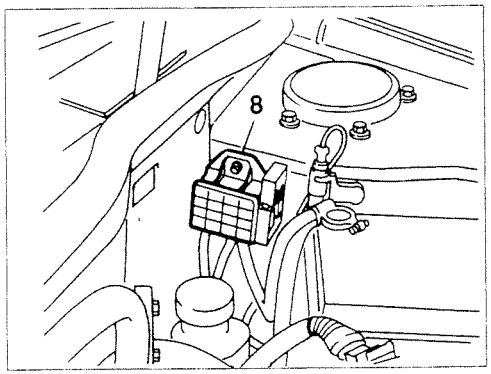

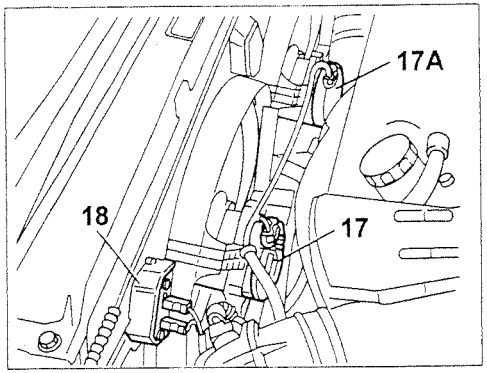

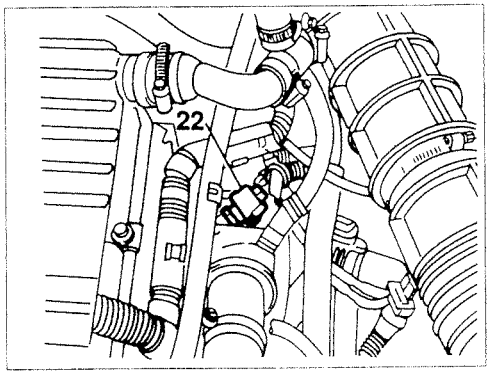

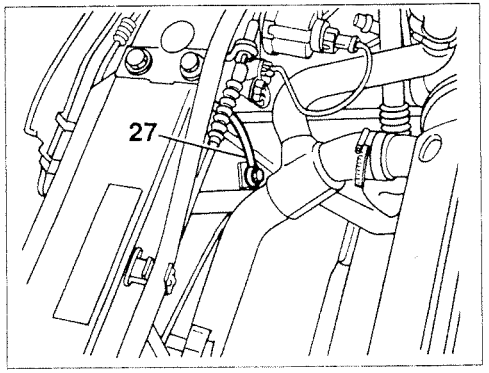

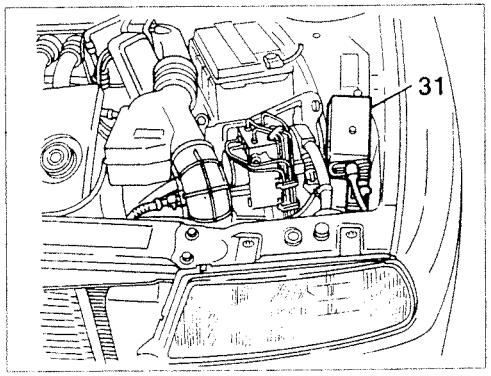

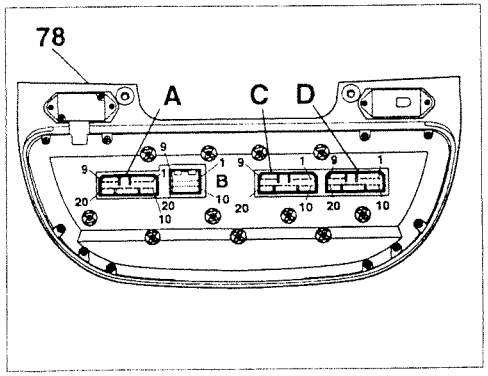

P3U010I01

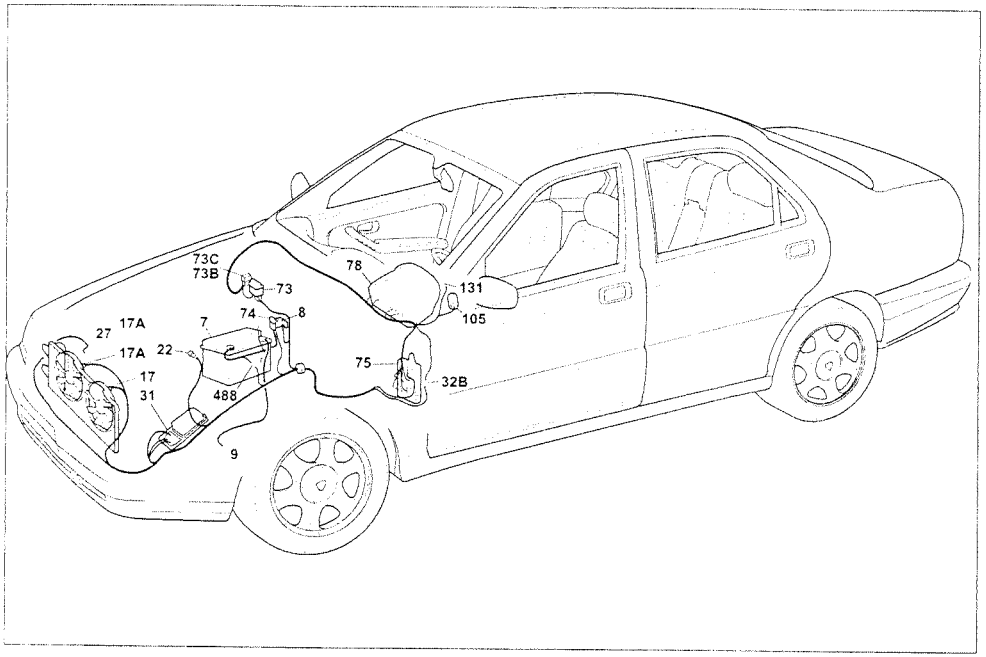

P3U011101

Version without air conditioning
Engine cooling - Water temperature gauge and overheating warning light

Components key

7 Battery
8 Main connector block
9 Earth on bodyshell
17 1st Engine cooling fan
17A 2nd Engine cooling fan
22 Engine coolant temperature sender unit
27 Right front earth
31 Peripheral control unit (engine compartment)
E6 Engine cooling fan high speed relay feed
E7 Engine cooling fan low speed relay feed
32B Connection between dashboard and left engine compartment cables
73 Secondary connector block
73B 60A protective fuse for I.G.E. control unit / junction unit
73C 30A fuse protecting ignition switch / alarm device
74 80A fuse protecting peripheral control unit (engine compartment)
75 Junction unit (dashboard)
78 Instrument panel
W Water temperature gauge
W1 Engine coolant overheating warning light
105 Ignition switch
131 Earth on steering column support
488 150A maxi fuse

N.D. Ultrasound welding taped in cable loom

3U011I

32B Connection between dashboard and left engine compartment cables

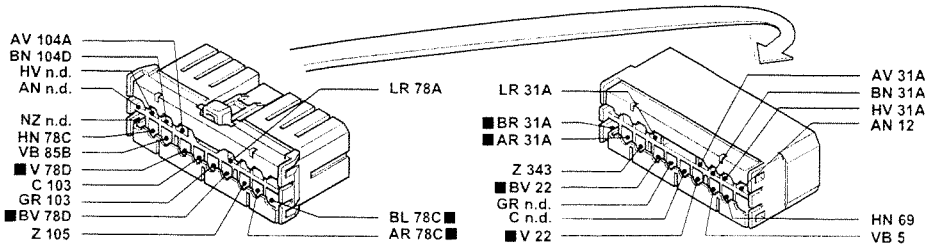

75G Junction unit (dashboard)

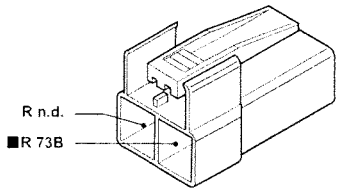

75H Junction unit (dashboard)

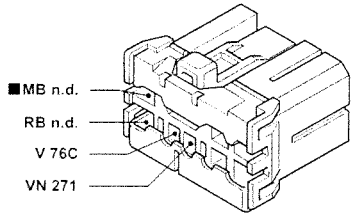

78A Trailer direction indicator warning light

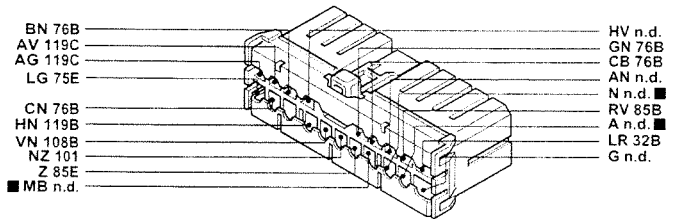

78D Fog lights warning light

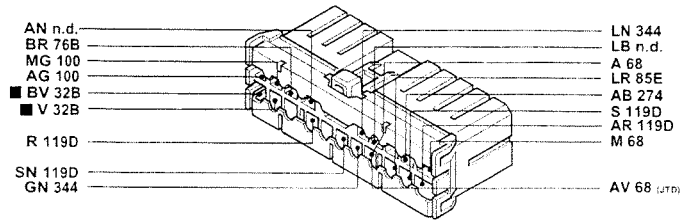

■ The cables in the wiring diagram are marked

P3U012I01

Naturally aspirated petrol versions with air conditioning

Engine cooling - **Water** temperature gauge and overheating warning light - (See key at end of wiring diagrams)

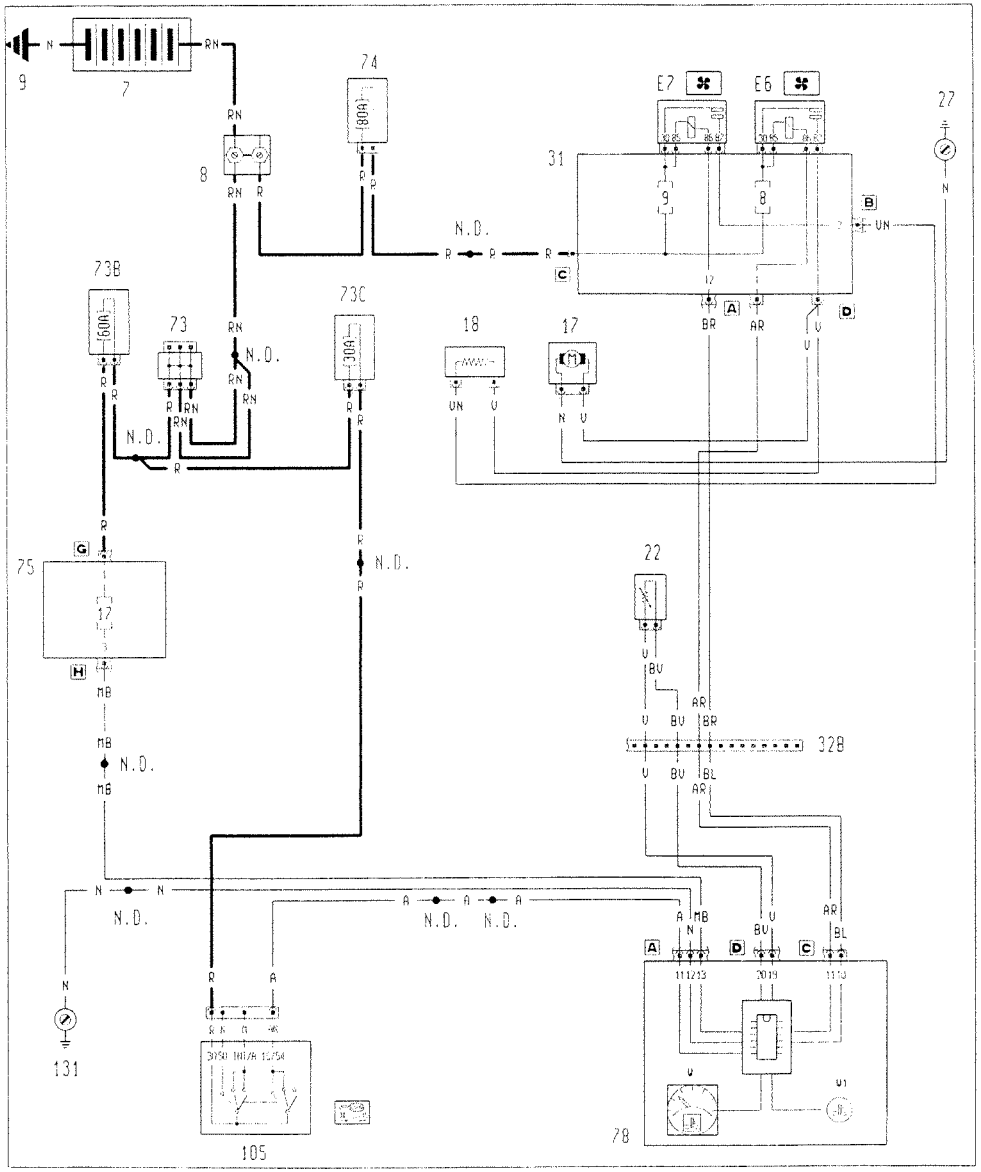

3U0131

Location of components

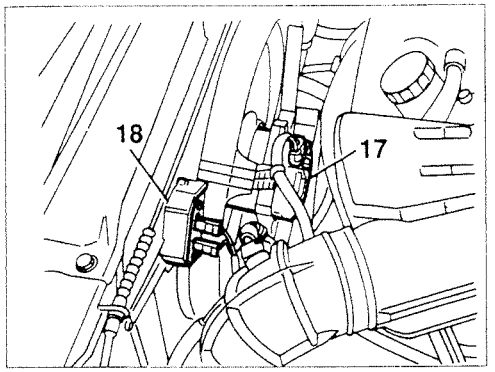

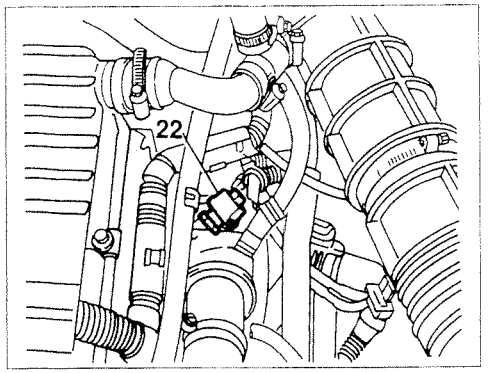

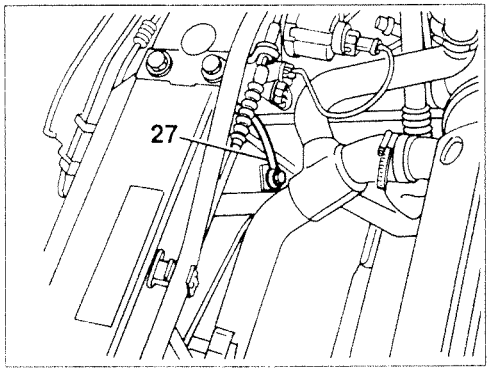

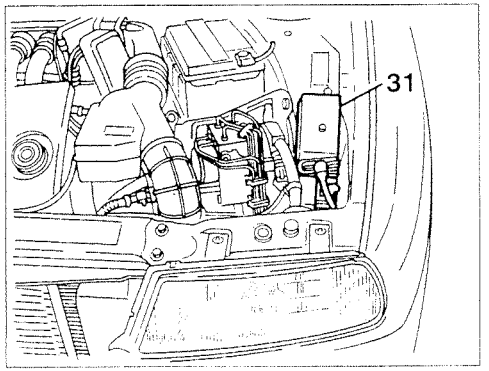

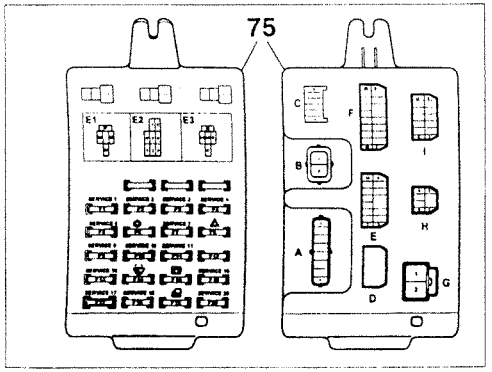

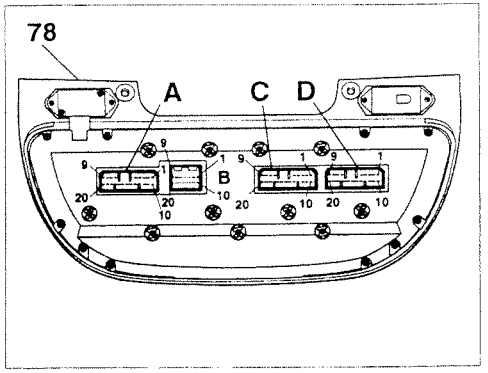

P3U014I01

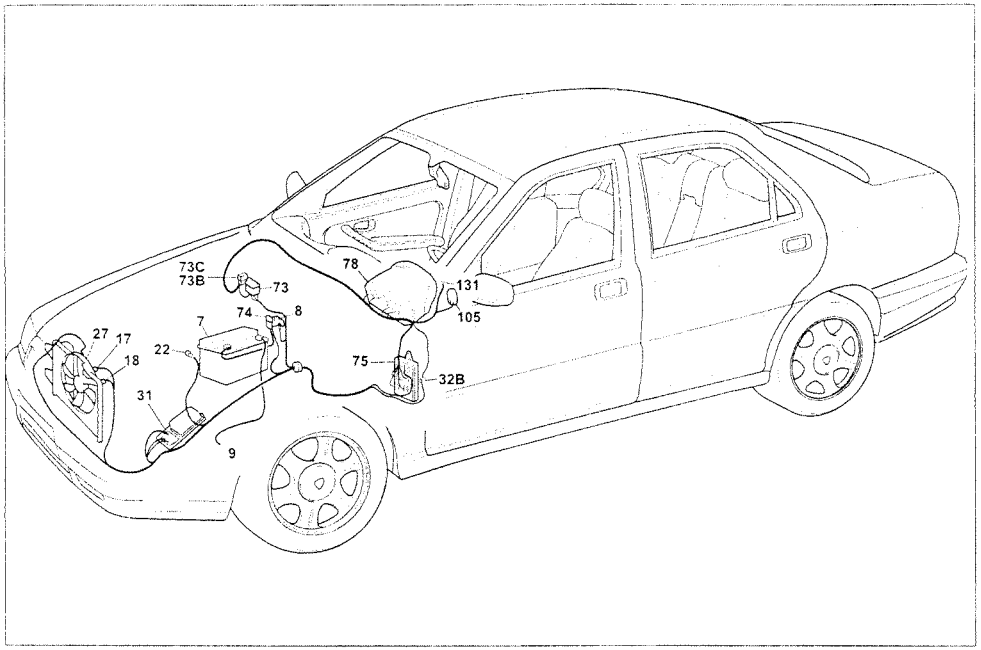

P3U015I01

Version with air conditioning
Engine cooling - Water temperature gauge and overheating warning light

Components key

7 Battery
8 Main connector block
9 Earth on bodyshell
17 1st. Engine cooling fan
18 Engine cooling fan speed resistance
22 Engine coolant temperature sender unit
27 Right front earth
31 Peripheral control unit (engine compartment)
E6 Engine cooling fan high speed relay feed
E7 Engine cooling fan low speed relay feed
32B Connection between dashboard and left engine compartment cables
73 Secondary connector block
73B 60A protective fuse for I.G.E. control unit / junction unit
73C 30A fuse protecting ignition switch / alarm device
74 80A fuse protecting peripheral control unit (engine compartment)
75 Junction unit (dashboard)
78 Instrument panel
W Water temperature gauge
W1 Engine coolant overheating warning light
105 Ignition switch
131 Earth on steering column support

N.D Ultrasound welding taped in cable loom

32B Connection between dashboard and left engine compartment cables

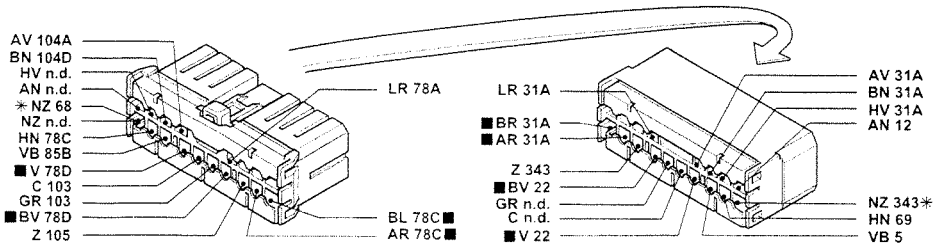

* Variant connection for 1998/2446/2959 versions with automatic transmission

78A Trailer direction indicator warning light

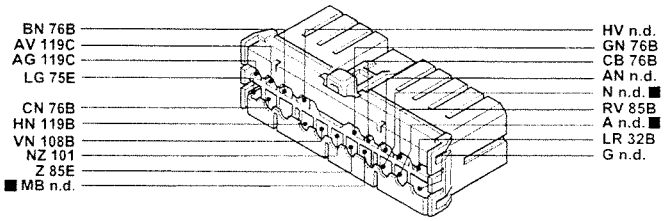

78C Heated rear windscreen warning light

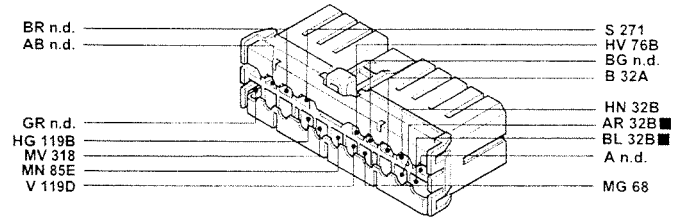

78D Fog lights warning light

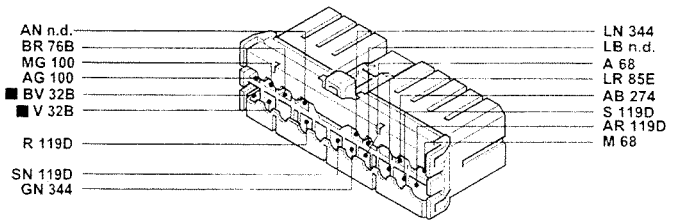

■ The cables in the wiring diagram are marked

P3U016I01

TD versions with air conditioning

Engine cooling - Water temperature gauge and overheating warning light - (See key at end of wiring diagrams)

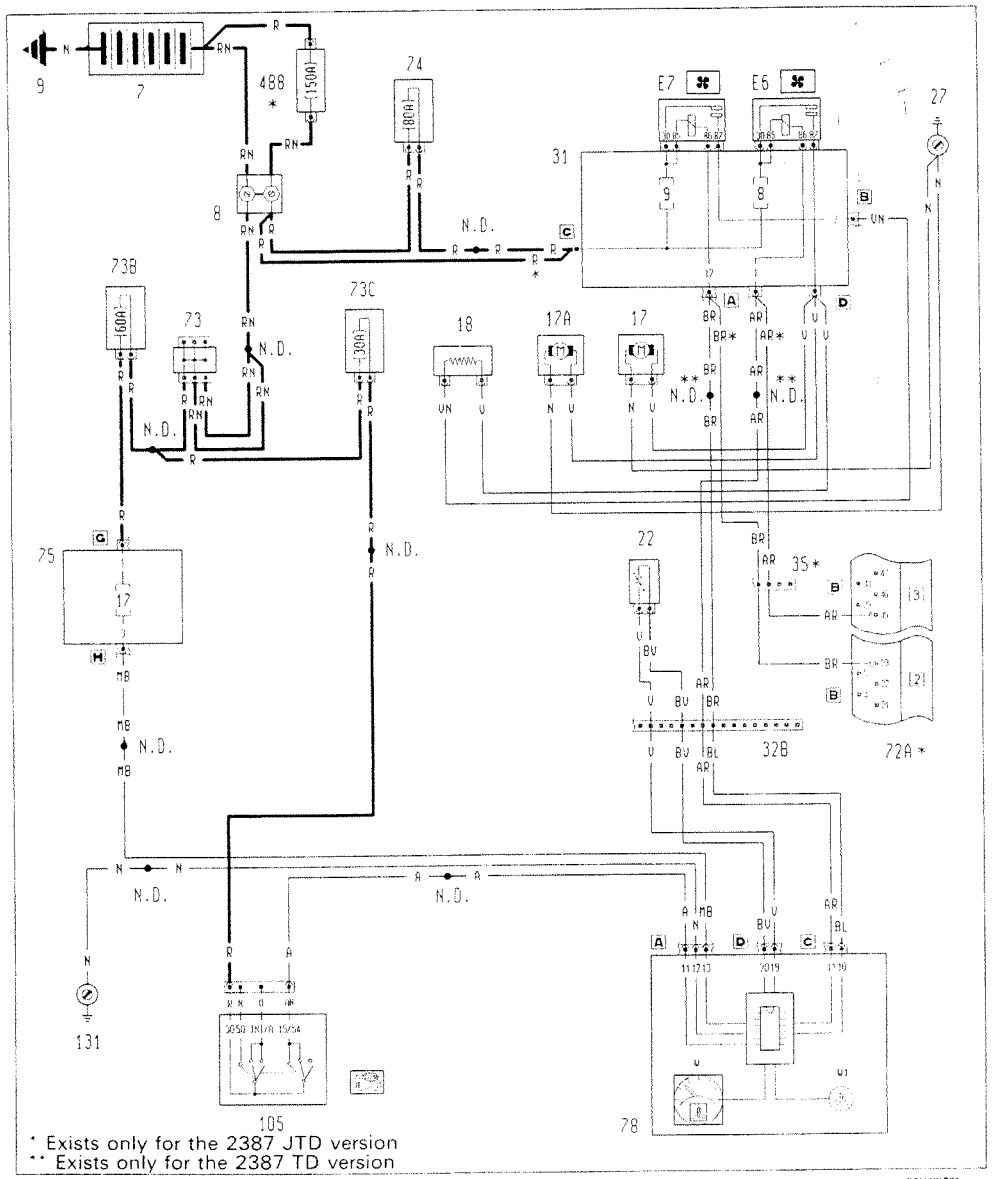

P3U081Z01

Location of components

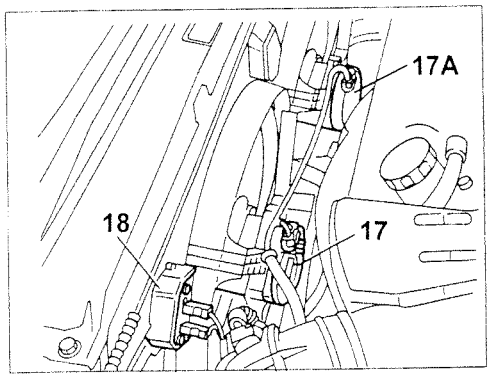

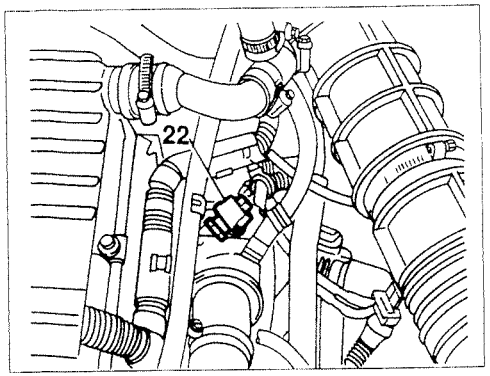

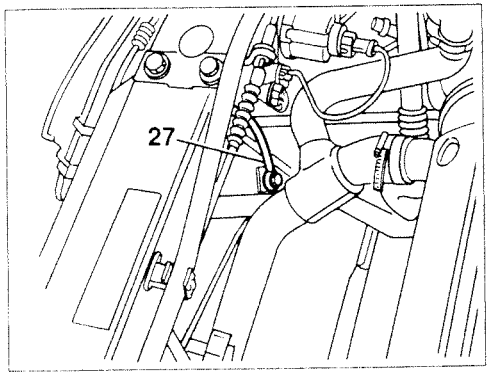

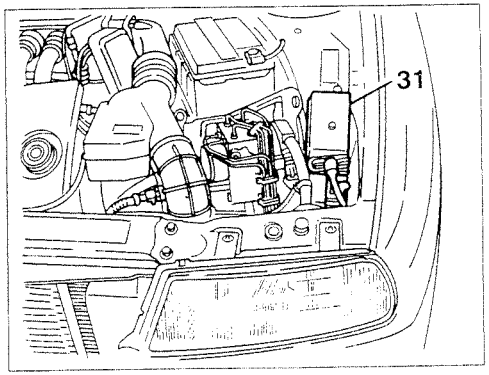

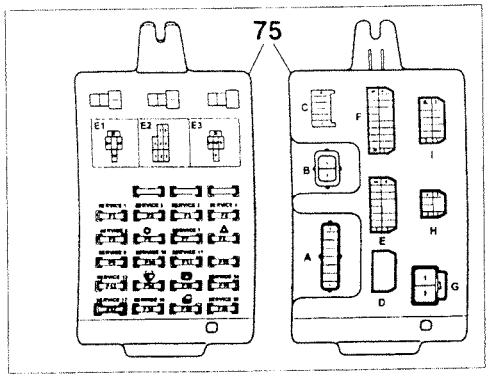

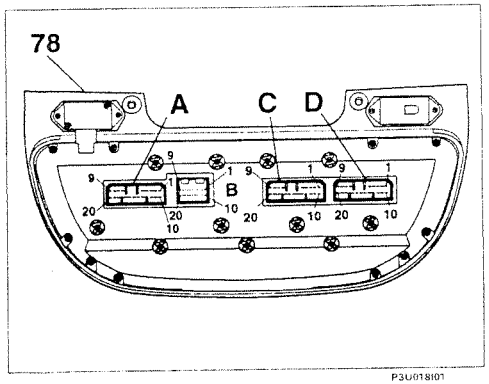

P3U018I01

3U0171

Copyright by Fiat Auto

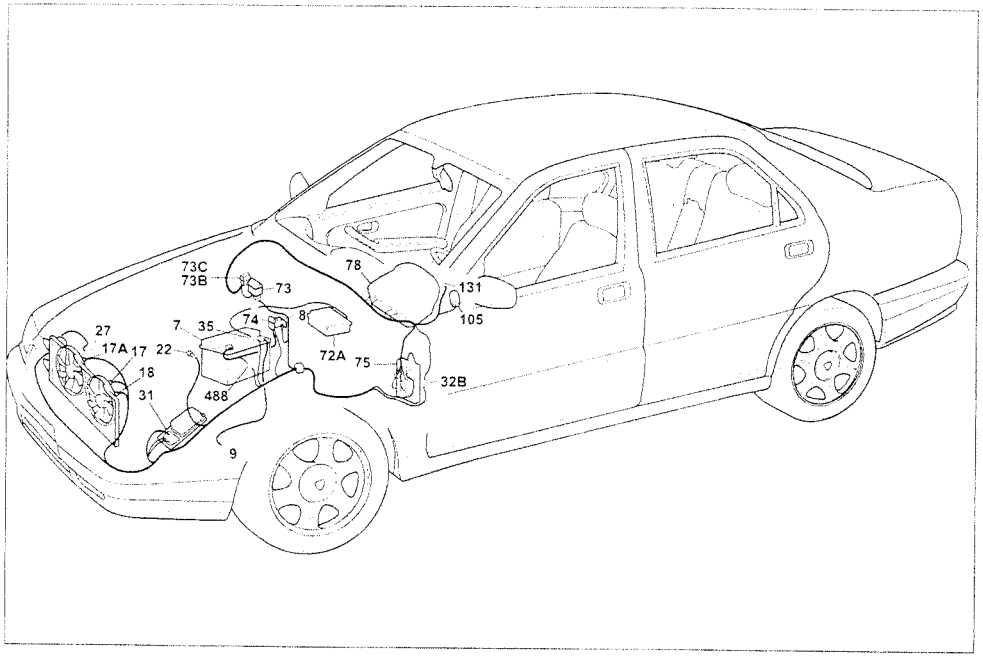

P3U019I01

Version with air conditioning
Engine cooling - Water temperature gauge and overheating warning light

Components key

7 Battery
8 Main connector block
9 Earth on bodyshell
17 1st Engine cooling fan
17A 2nd Engine cooling fan
18 Engine cooling fan speed resistance
22 Engine coolant temperature sender unit
27 Right front earth
31 Peripheral control unit (engine compartment)
E6 Engine cooling fan high speed relay feed
E7 Engine cooling fan low speed relay feed
32B Connection between dashboard and left engine compartment cables
35 Connection between engine compartment and electronic injection cables
72A Fuel pump electronic control unit
73 Secondary connector block
73C 30A fuse protecting ignition switch / alarm device
73B 60A protective fuse for I.G.E. control unit / junction unit
74 80A fuse protecting peripheral control unit (engine compartment)
75 Junction unit (dashboard)
78 Instrument panel
W Water temperature gauge
W1 Engine coolant overheating warning light
105 Ignition switch
131 Earth on steering column support
488 150A maxi fuse

N D Ultrasound welding taped in cable loom

32B Connection between dashboard and left engine compartment cables

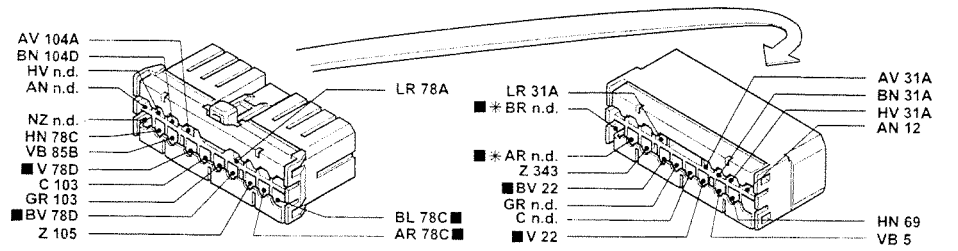

* Variant connection for Turbo Diesel versions

35 Connection between engine compartment and electronic injection cables

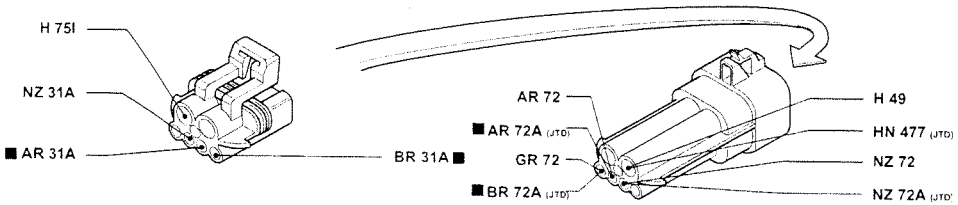

78C Heated rear windscreen warning light

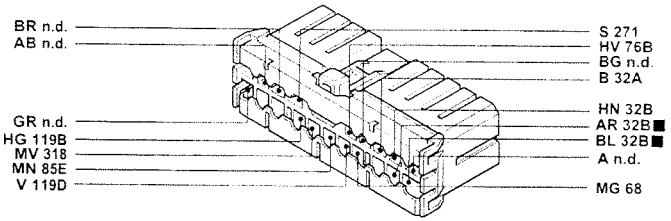

78D Fog lights warning light

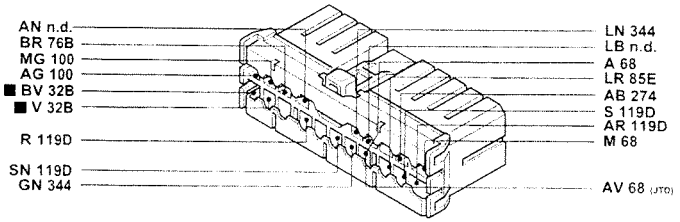

■ The cables in the wiring diagram are marked

P3U020I01

Turbo petrol versions with air conditioning

Engine cooling - Water temperature gauge and overheating warning light - (See key at end of wiring diagrams)

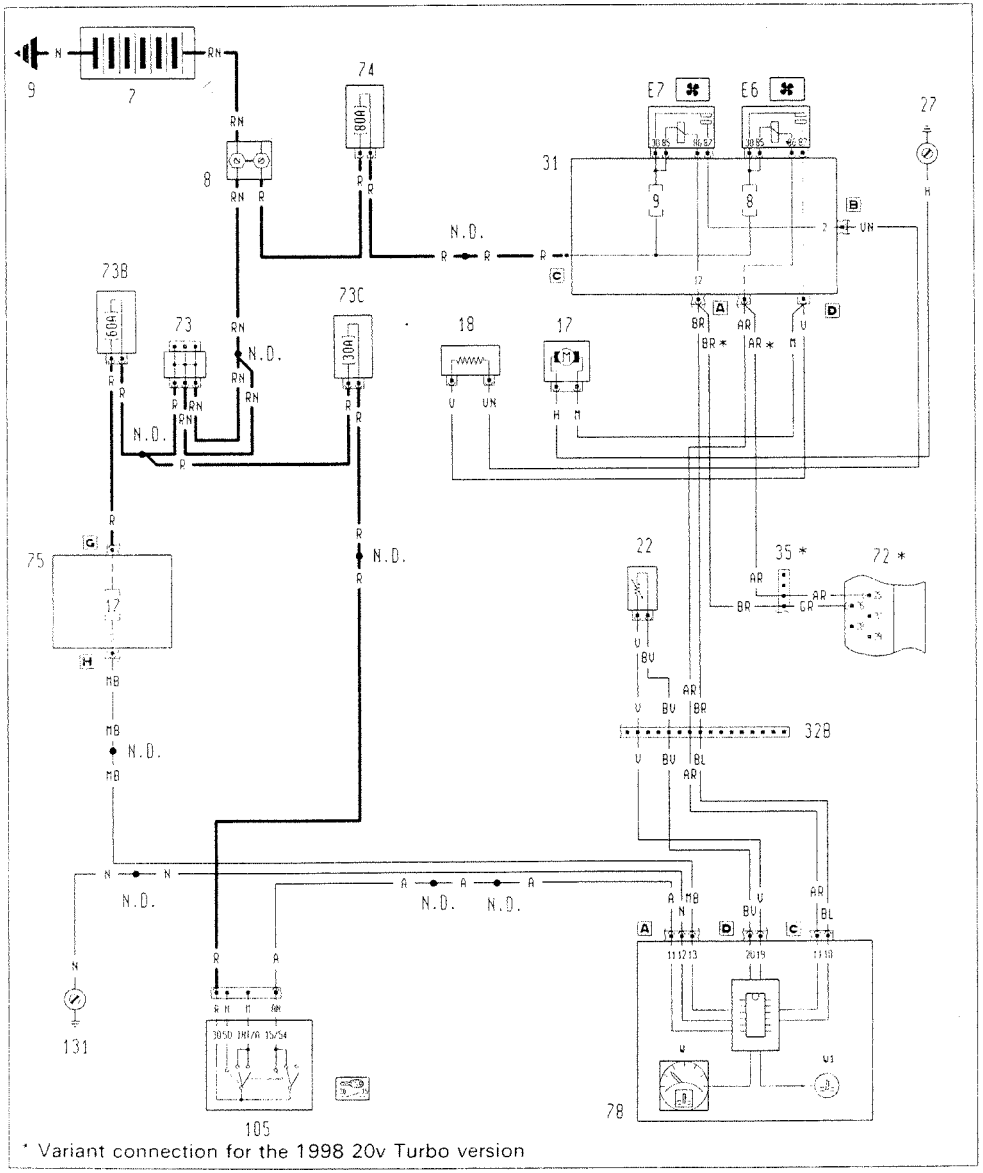

P3U091Z01

Location of components

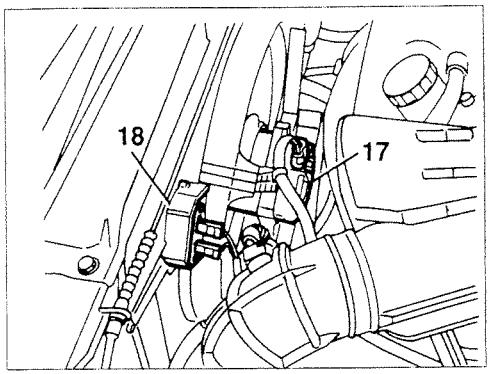

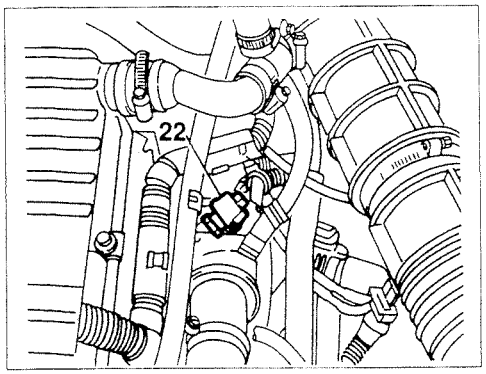

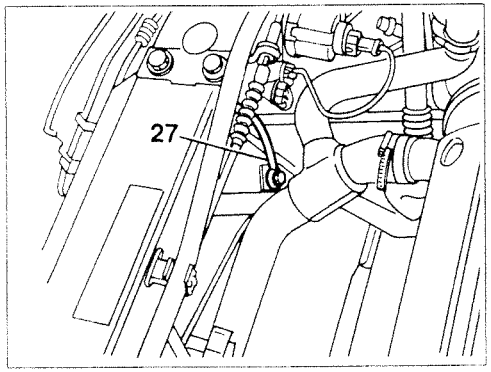

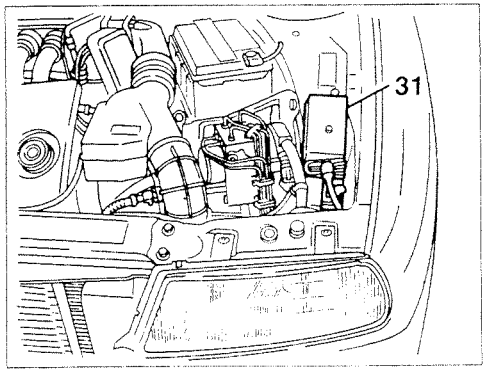

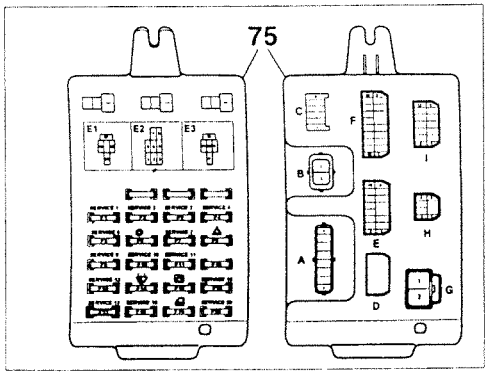

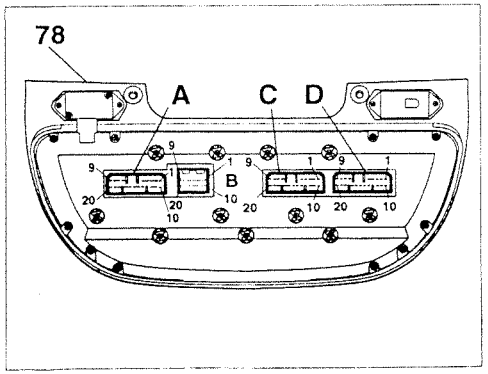

P3U022I01

3U0211

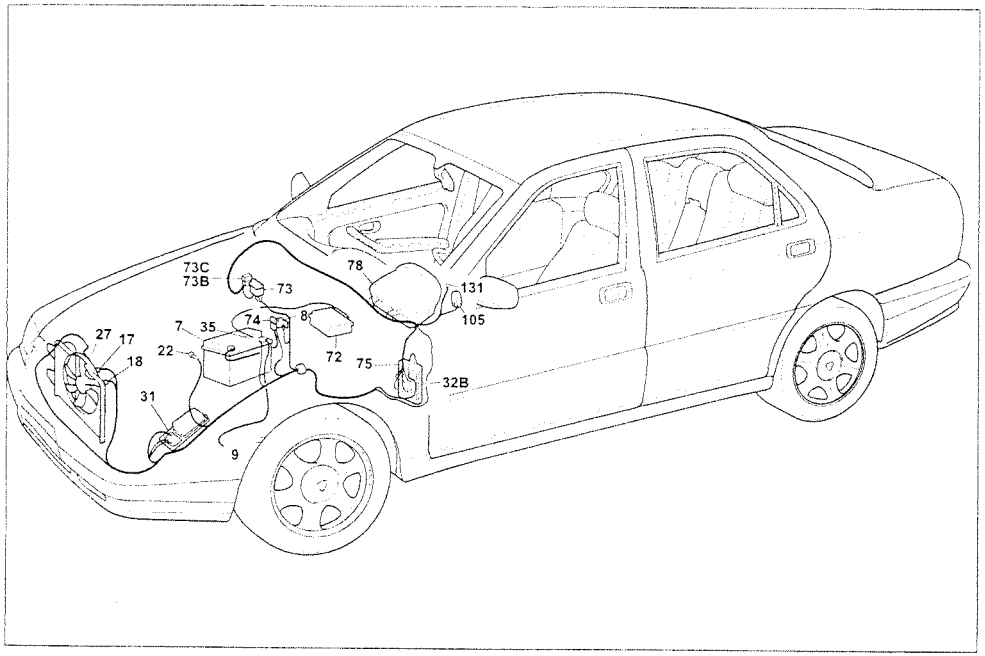

P3U023I01

Version with air conditioning
Engine cooling - Water temperature gauge and overheating warning light

Components key

7 Battery
8 Main connector block
9 Earth on bodyshell
17 1st Engine cooling fan
18 Engine cooling fan speed resistance
22 Engine coolant temperature sender unit
27 Right front earth
31 Peripheral control unit (engine compartment)
E6 Engine cooling fan high speed relay feed
E7 Engine cooling fan low speed relay feed
32B Connection between dashboard and left engine compartment cables
35 Connection between engine cable and elecctronic injection cable
72 Electronic injection control unit
73 Secondary connector block
73B 60A protective fuse for I.G.E. control unit / junction unit
73C 30A fuse protecting ignition switch / alarm device
74 80A fuse protecting peripheral control unit (engine compartment)
75 Junction unit (dashboard)
78 Instrument panel
W Water temperature gauge
W1 Engine coolant overheating warning light
105 Ignition switch
131 Earth on steering column support

N.D. Ultrasound welding taped in cable loom

32B Connection between dashboard and left engine compartment cables

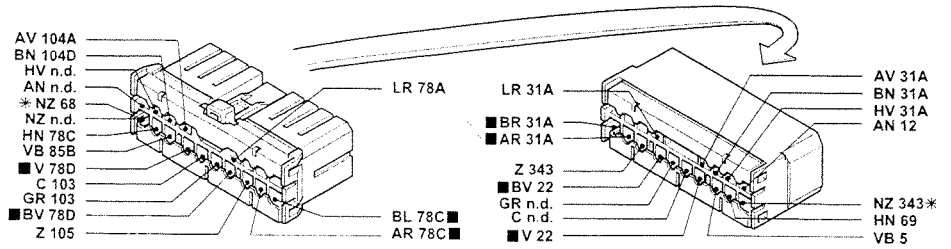

* Variant connection for 1998/2446/2959 versions with automatic transmission

35 Connection between engine compartment and electronic injection cables

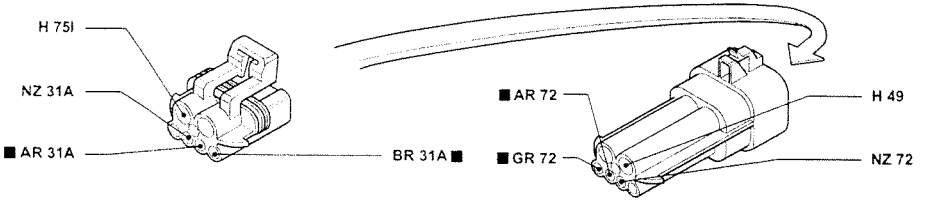

75G Junction unit (dashboard)

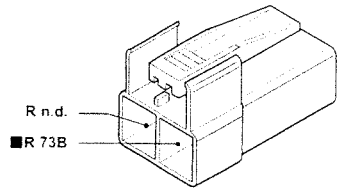

75H Junction unit (dashboard)

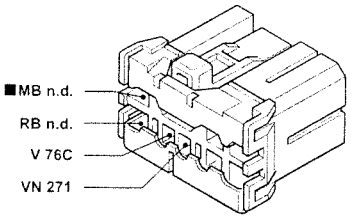

78A Trailer direction indicator warning light

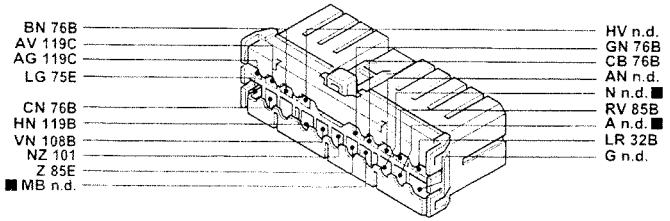

■ The cables in the wiring diagram are marked

P3U024I01

Preparation for middle of the range radio - Preparation for radio phone - (See key at end of wiring diagrams)

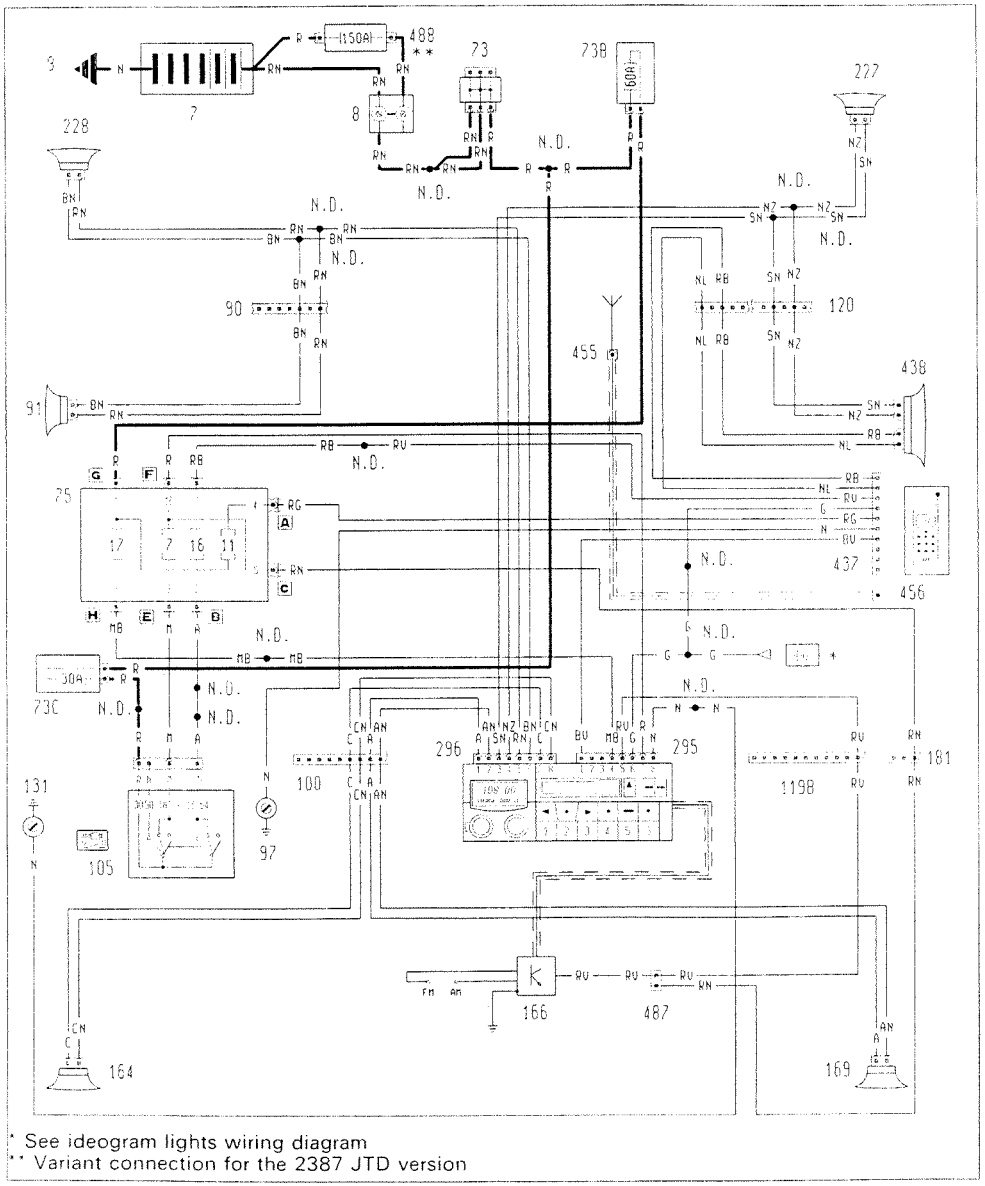

* See ideogram lights wiring diagram
** Variant connection for the 2387 JTD version

P3U10IZ01

Location of components

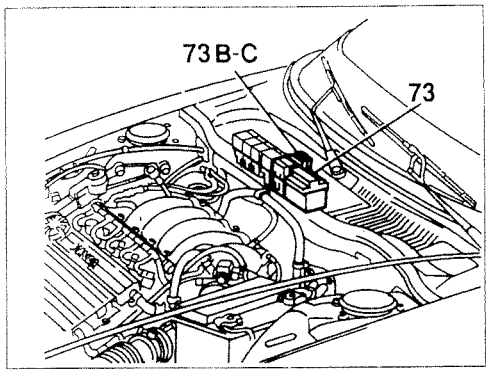

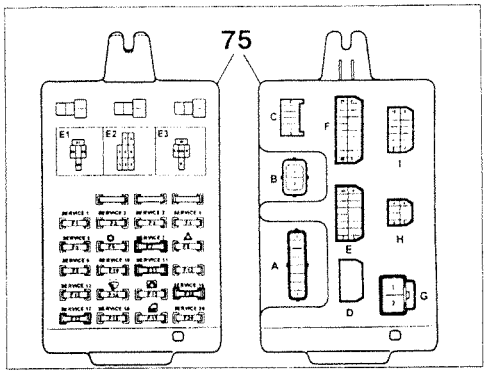

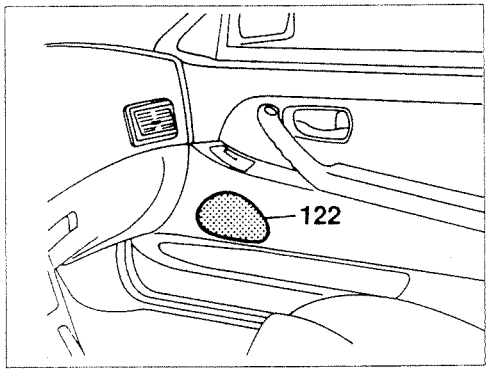

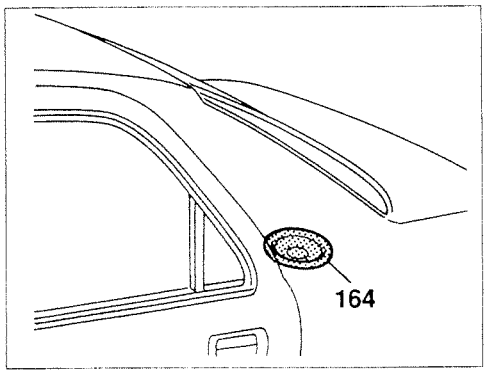

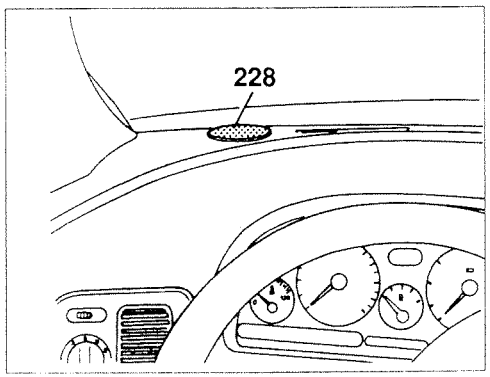

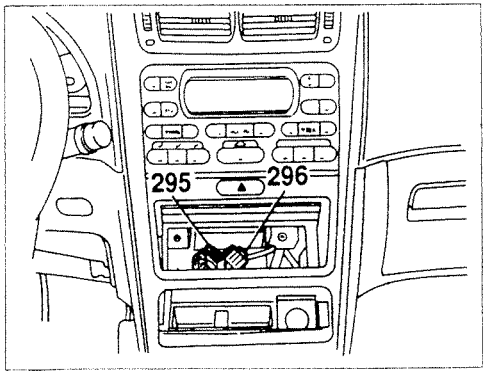

P3U026I01

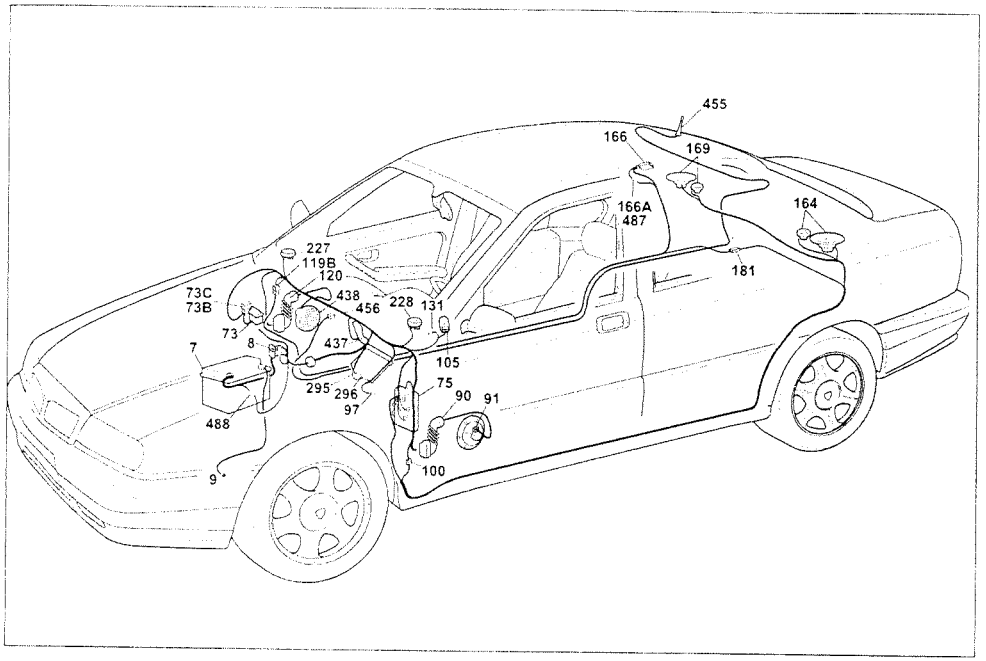

P3U027101

Preparation for middle of the range radio

Components key

7 Battery
8 Main connector block
9 Earth on bodyshell
73 Secondary connector block
73B 60A protective fuse for I.G.E. control unit / junction unit
73C 30A fuse protecting ignition switch / alarm device
75 Junction unit (dashboard)
90 Connection between dashboard and left front door cables
91 Speaker in left front door
97 Earth on floor
100 Connection between dashboard and left longitudinal cables
105 Ignition switch
119B Connection between dashboard and right longitudinal cables
120 Connection between dashboard and right front door cables
131 Earth on steering column support
164 Left rear speaker
166 Amplifier for aerial in rearscreen
166A Rear cables connection in rearscreen
169 Right rear speaker
181 Connection between left longitudinal and right longitudinal cables
227 Right front speaker
228 Left front speaker
295 Radio cables connection
296 Radio cables connection
437 Preparation for radio phone
438 Dual function speaker for radio and hands-free radio phone in right front door
455 Dual function aerial for radio and radio phone
456 Connector for radio phone aerial
487 Connector for electrically operated aerial supply
488 150A maxi fuse

N.D. Ultrasound welding taped in cable loom

120 Connection between dashboard and right front door cables

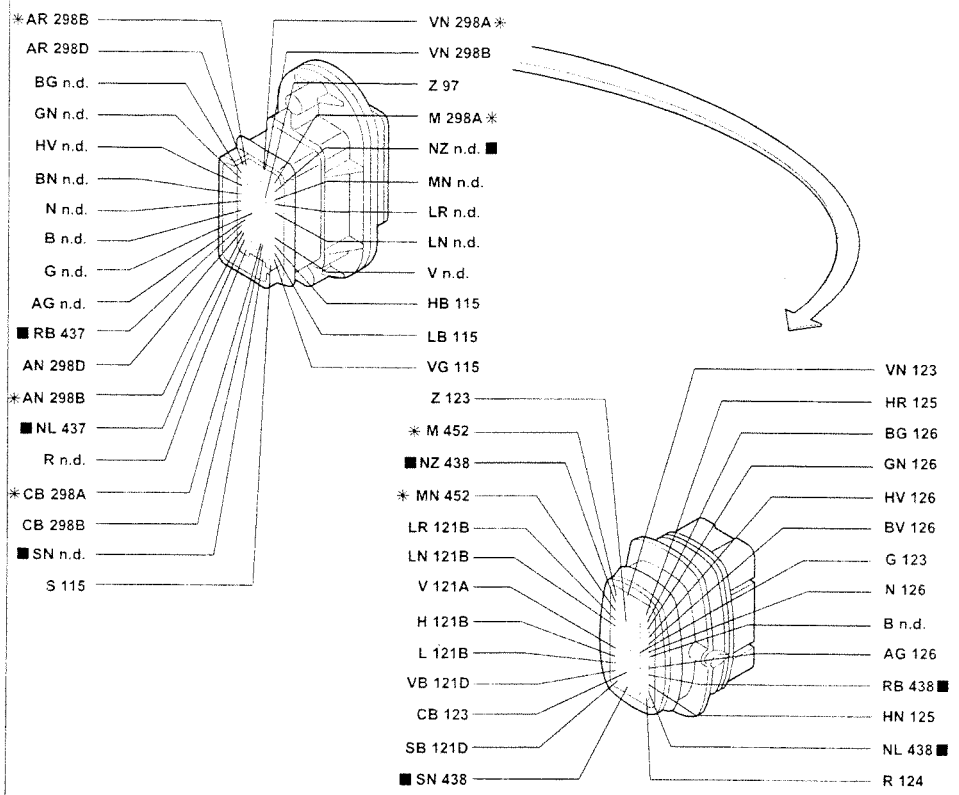

* Variant connection for COUPE' versions

181 Connection between left longitudinal and right longitudinal cables

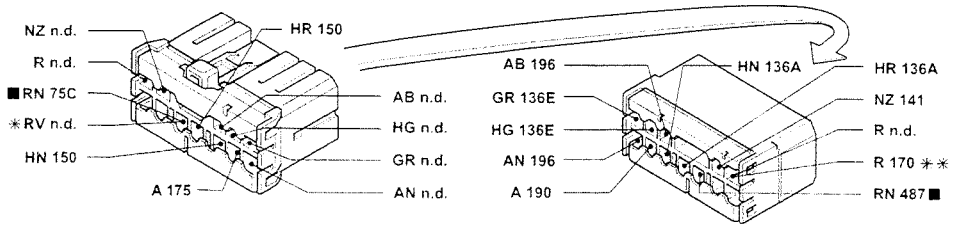

* Variant connection for versions with top of the range radio ** Variant connection for COUPE' versions

■ The cables in the wiring diagram are marked

P3U028101

Preparation for middle of the range radio - Preparation for radio phone - (See key at end of wiring diagrams)

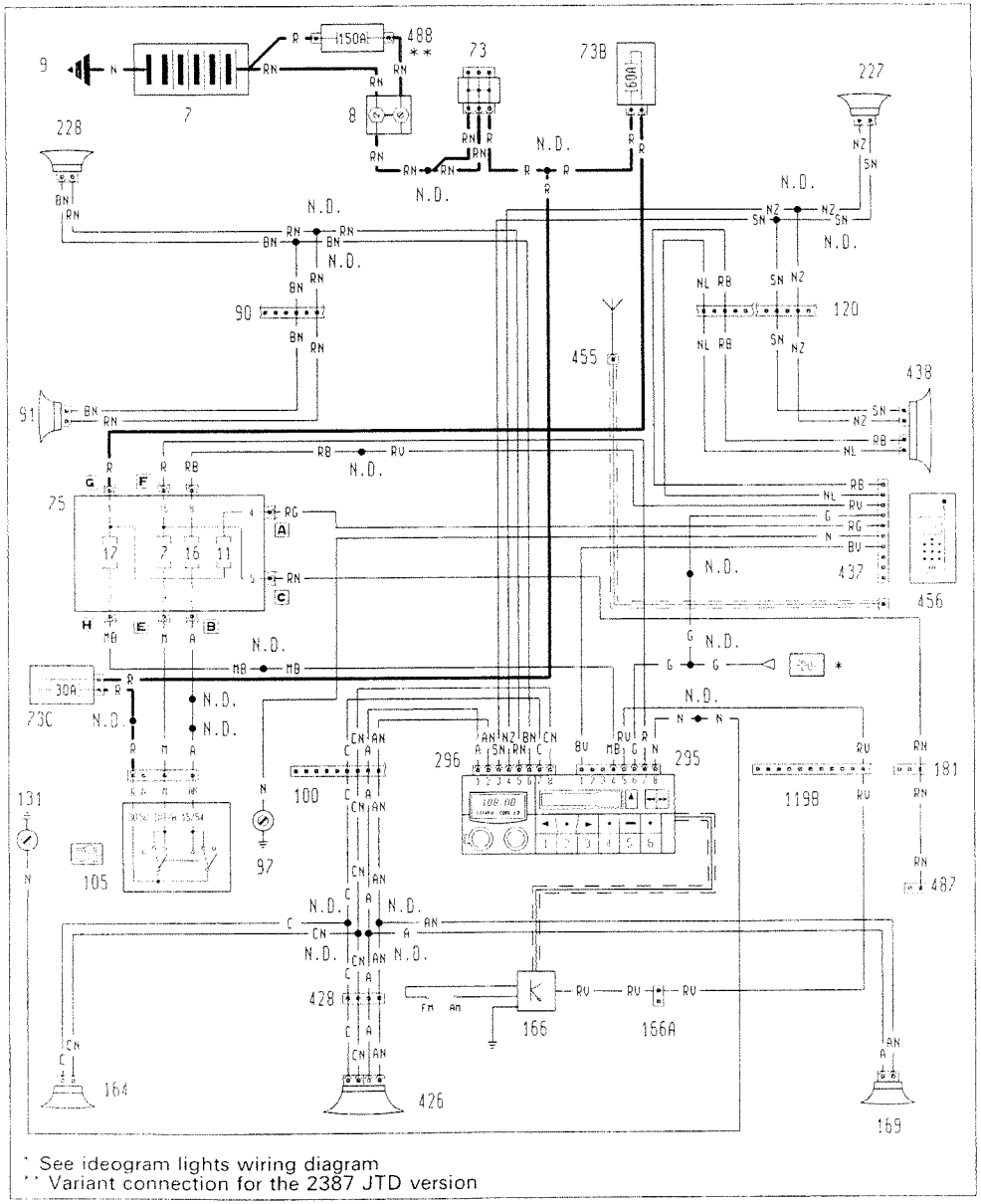

P3U011201

3U029I

Location of components

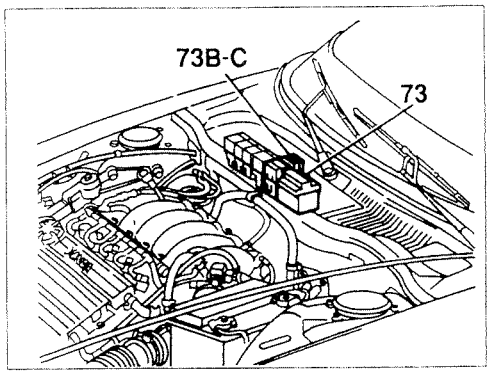

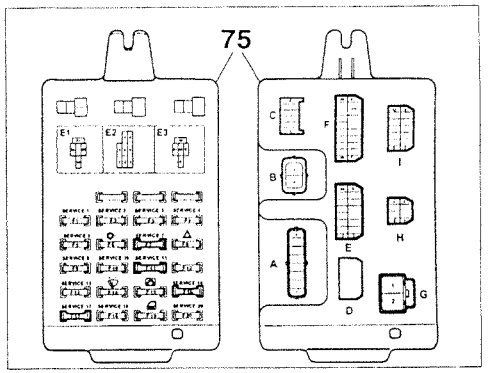

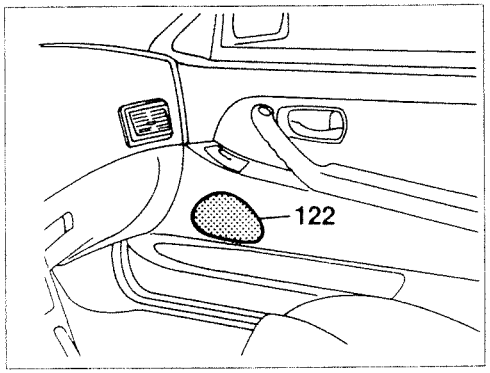

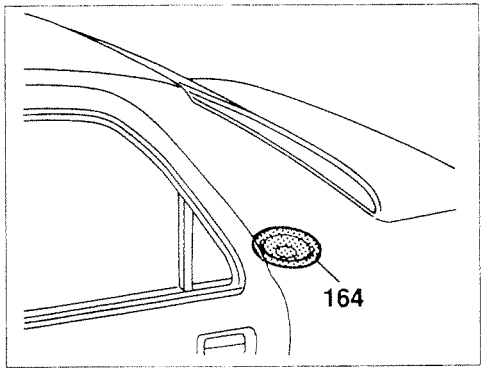

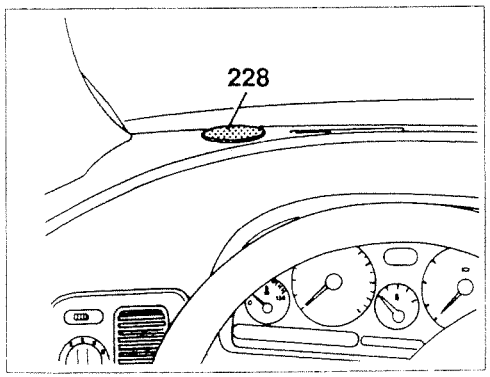

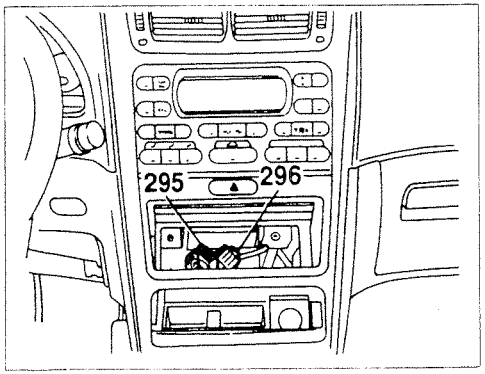

P3U030101

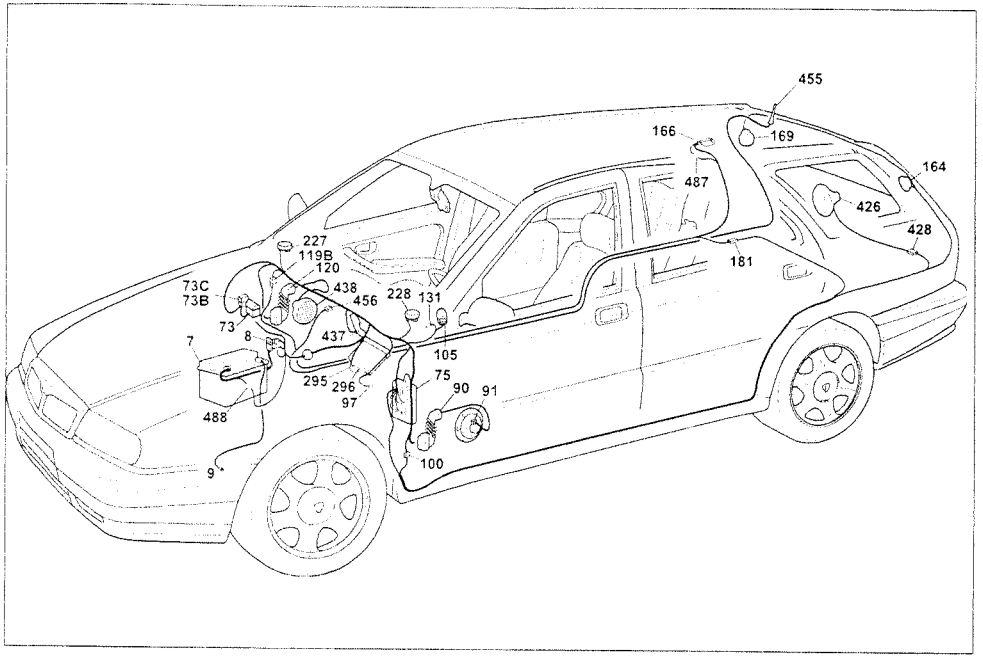

P3U031I01

Preparation for middle of the range radio

Components key

7 Battery
8 Main connector block
9 Earth on bodyshell
73 Secondary connector block
73B 60A protective fuse for I.G.E. control unit / junction unit
73C 30A fuse protecting ignition switch / alarm device
75 Junction unit (dashboard)
90 Connection between dashboard and left front door cables
91 Speaker in left front door
97 Earth on floor
100 Connection between dashboard and left longitudinal cables
105 Ignition switch
119B Connection between dashboard and right longitudinal cables
120 Connection between dashboard and right front door cables
131 Earth on steering column support
164 Left rear speaker
166 Amplifier for aerial in rearscreen
169 Right rear speaker
181 Connection between left longitudinal and right longitudinal cables
227 Right front speaker
228 Left front speaker
295 Radio cables connection
296 Radio cables connection
426 Speaker in tailgate (woofer)
428 Connection for left longitudinal / left tailgate for speaker cables
437 Preparation for radio phone
438 Dual function speaker for radio and hands-free radio phone in right front door
455 Dual function aerial for radio and radio phone
456 Connector for radio phone aerial
487 Connector for electrically operated aerial supply
488 150A maxi fuse

N.D. Ultrasound welding taped in cable loom

100 Connection between dashboard and left longitudinal cables

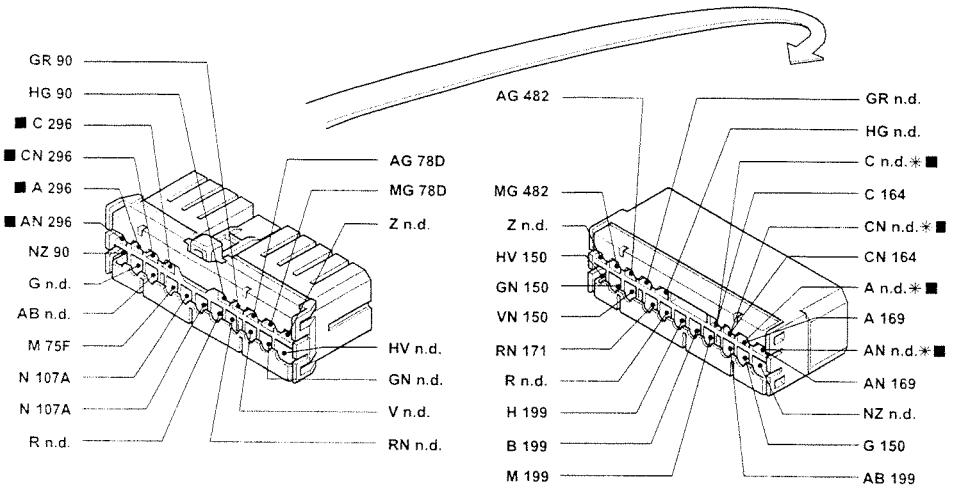

* Variant connection for Station Wagon versions

181 Connection between left longitudinal and right longitudinal cables

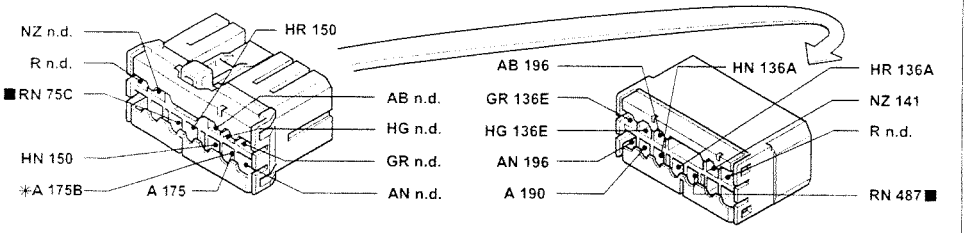

* Variant connection for Station Wagon versions

428 Connection between longitudinal/left tailgate cables for Speaker

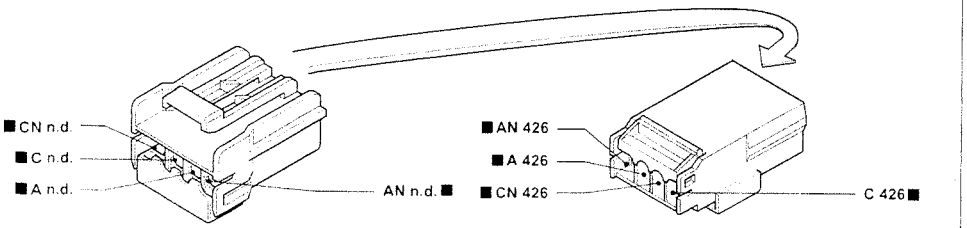

■ The cables in the wiring diagram are marked

P3U032I01

Preparation for top of the range radio - Preparation for radio phone - (See key at end of wiring diagrams)

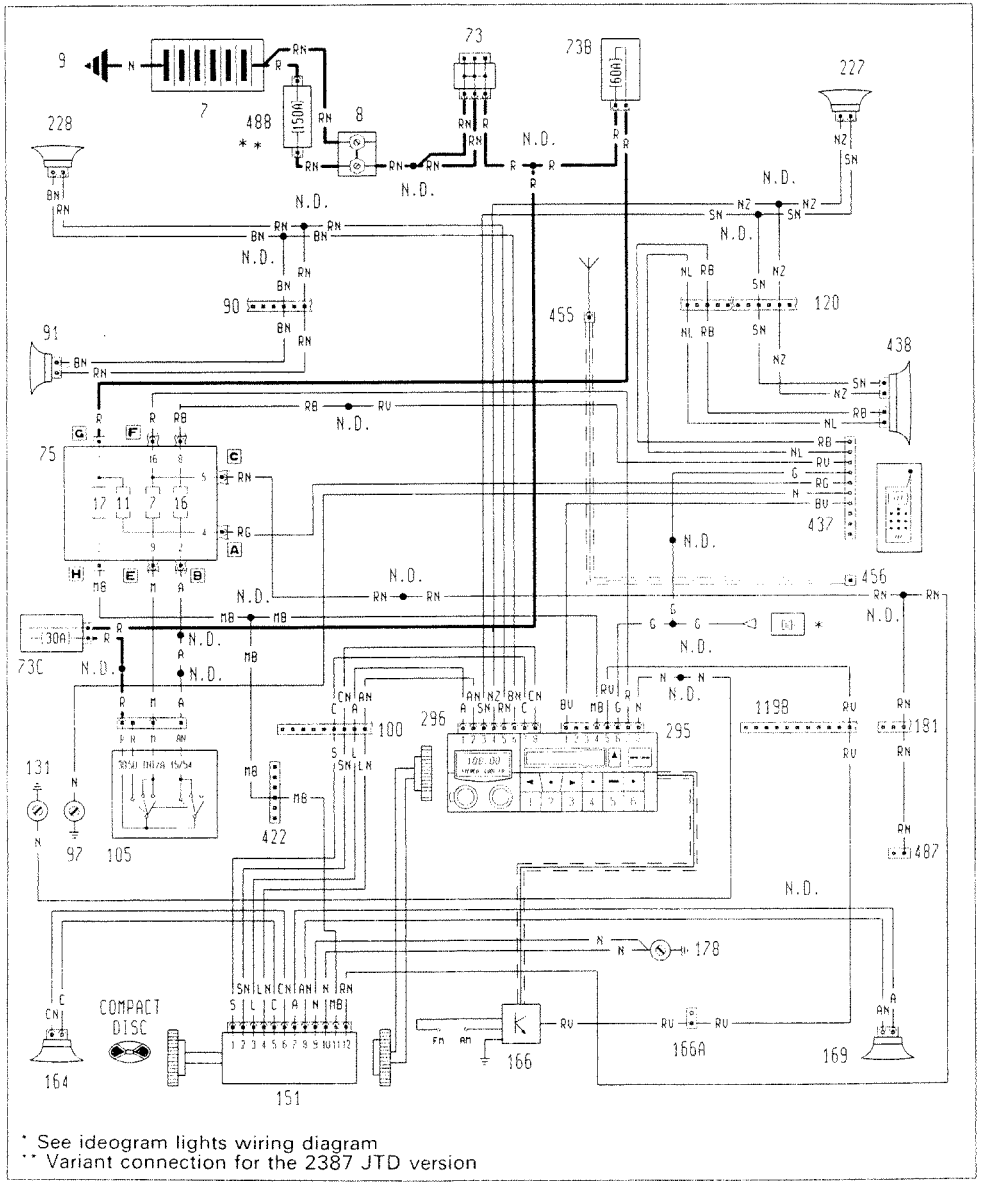

P3U12IZ01

3U033I

Location of components

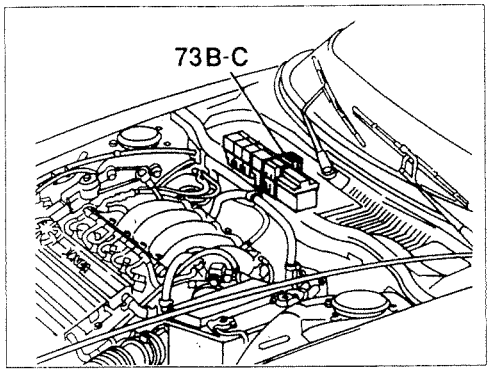

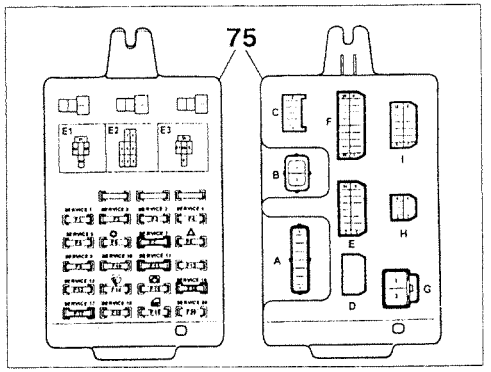

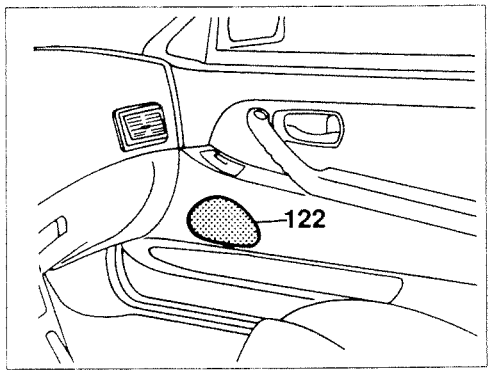

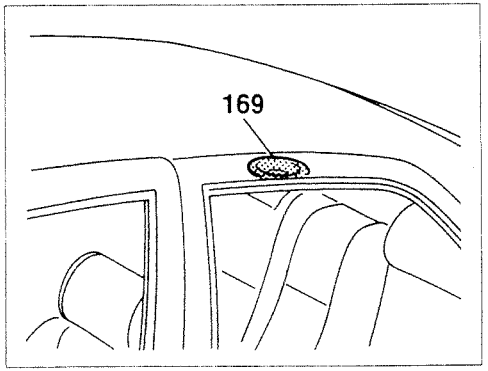

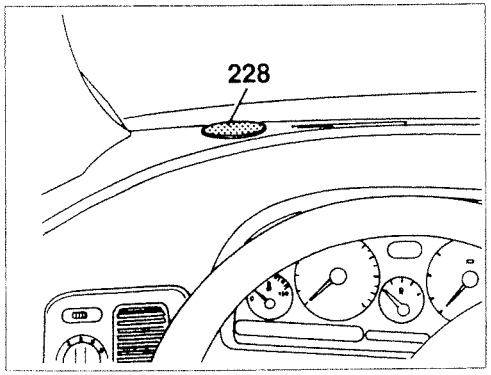

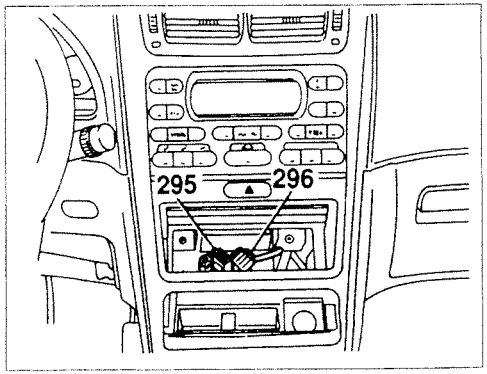

P3U034I01

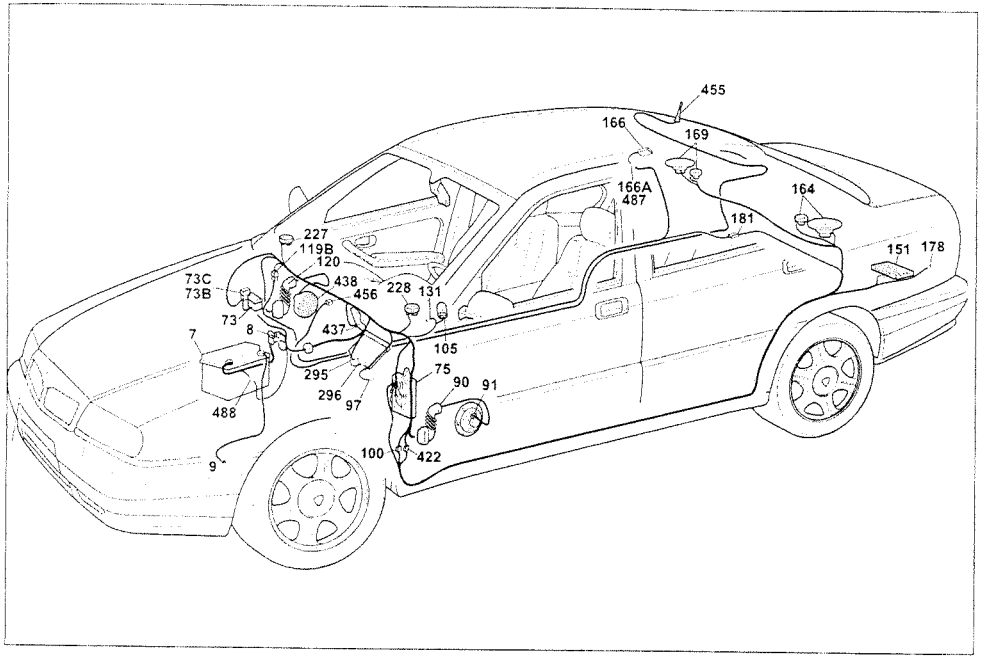

P3U035I01

Preparation for top of the range radio

Components key

7 Battery
8 Main connector block
9 Earth on bodyshell
73 Secondary connector block
73B 60A protective fuse for I.G.E. control unit / junction unit
73C 30A fuse protecting ignition switch / alarm device
75 Junction unit (dashboard)
90 Connection between dashboard and left front door cables
91 Speaker in left front door
97 Earth on floor
100 Connection between dashboard and left longitudinal cables
105 Ignition switch
119B Connection between dashboard and right longitudinal cables
120 Connection between dashboard and right front door cables
131 Earth on steering column support
151 Amplifier for radio
164 Left rear speaker
166 Amplifier for aerial in rearscreen
166A Rear cables connection in rearscreen
169 Right rear speaker
178 Left rear earth
181 Connection between left longitudinal and right longitudinal cables
227 Right front speaker
228 Left front speaker
295 Radio cables connection
296 Radio cables connection
422 Connection between dashboard / left longitudinal cables
437 Preparation for radio phone
438 Dual function speaker for radio and hands-free radio phone in right front door
455 Dual function aerial for radio and radio phone
456 Connector for radio phone aerial
487 Connector for electrically operated aerial supply
488 150A maxi fuse

N.D. Ultrasound welding taped in cable loom

119B Connection between dashboard and right longitudinal cables

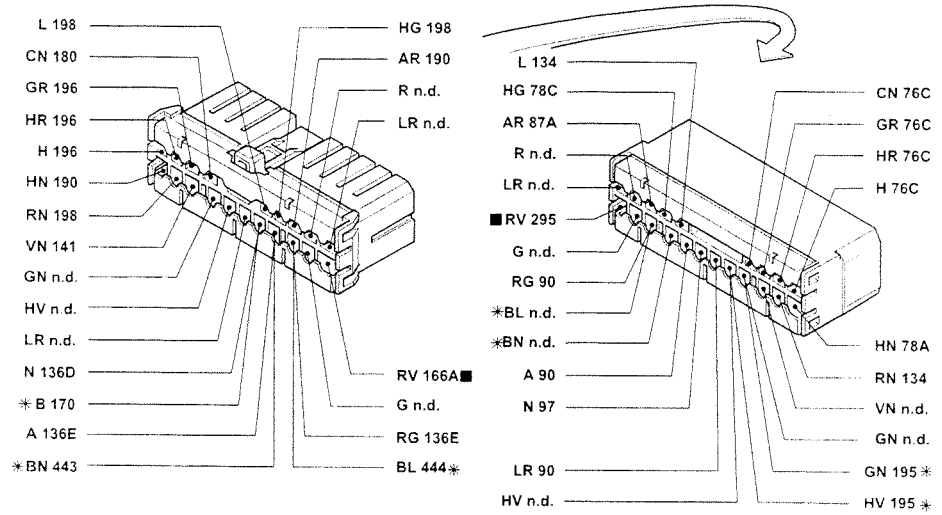

* Variant connection for COUPE' versions

166A Rear cables connection in rearscreen

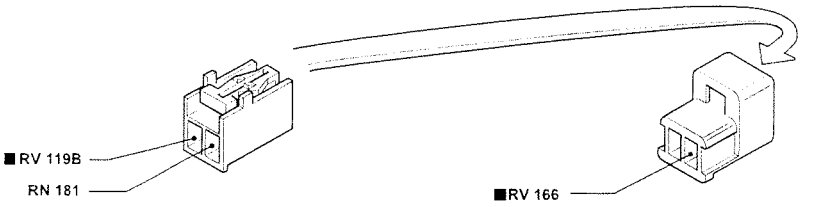

422 Connection between dashboard and left longitudinal cables (Only for COUPE' versions)

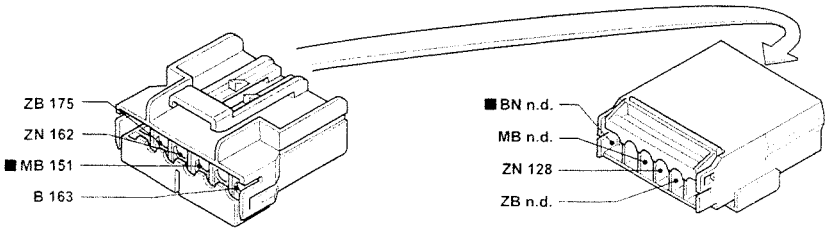

P3U036I01

■ The cables in the wiring diagram are marked

Preparation for top of the range radio - Preparation for radio phone - (See key at end of wiring diagrams)

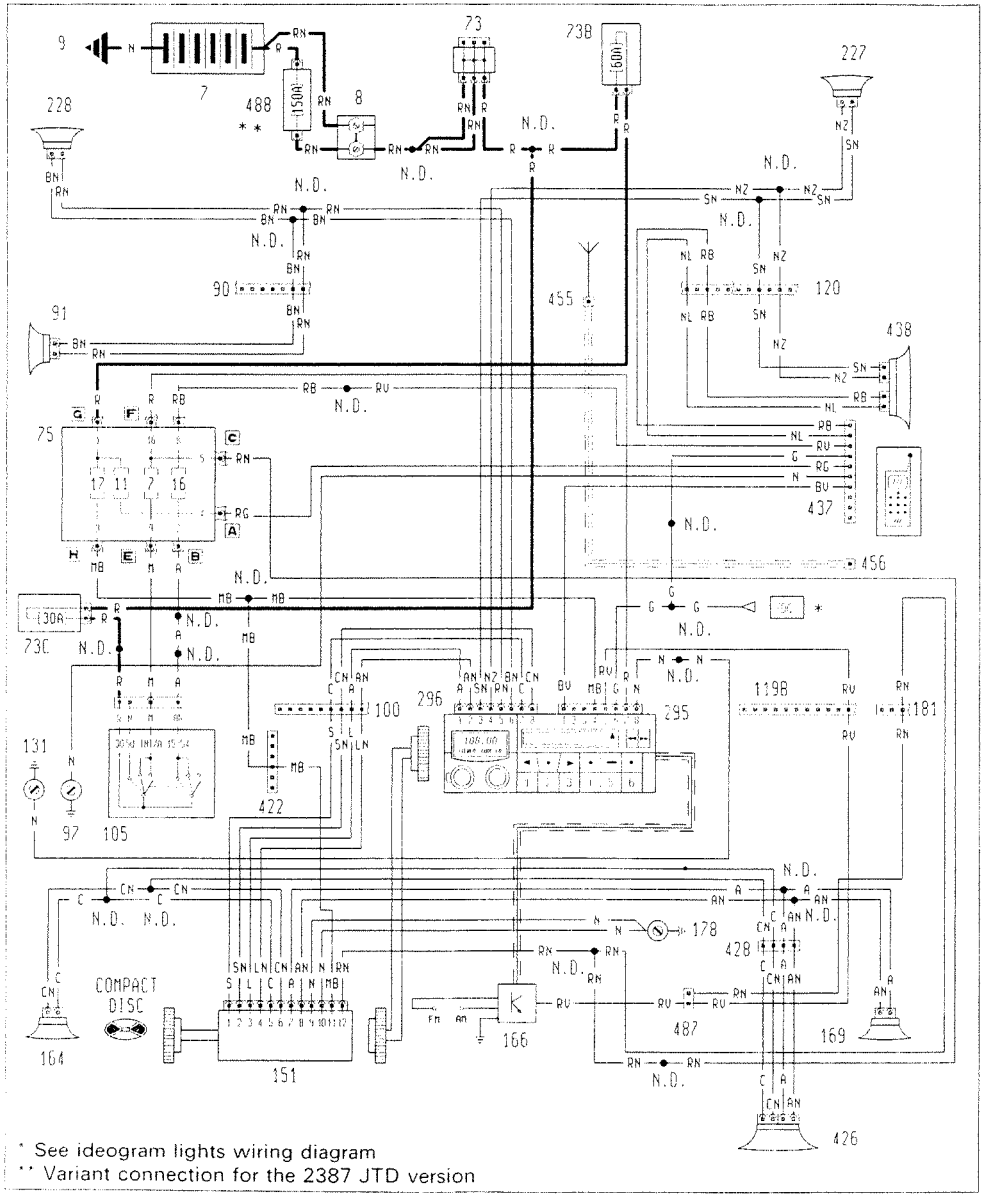

P3U013IZ01

3U037I

Location of components

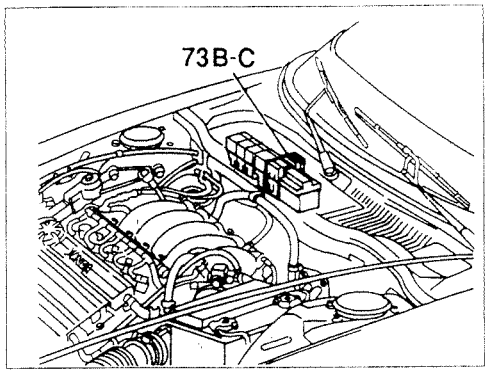

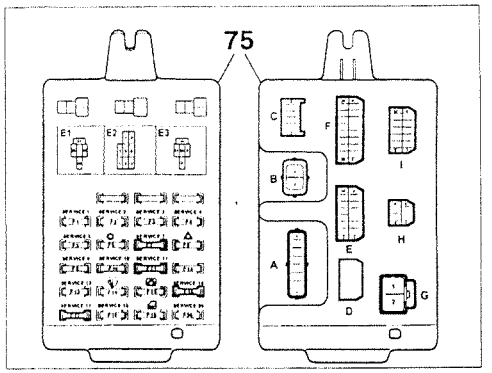

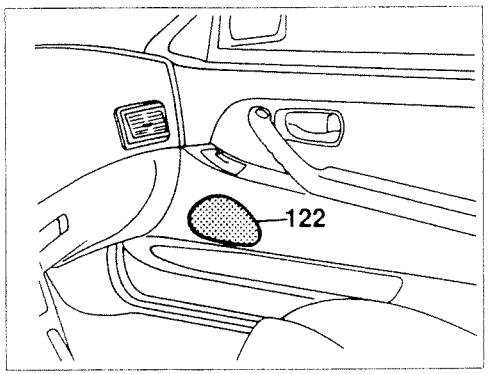

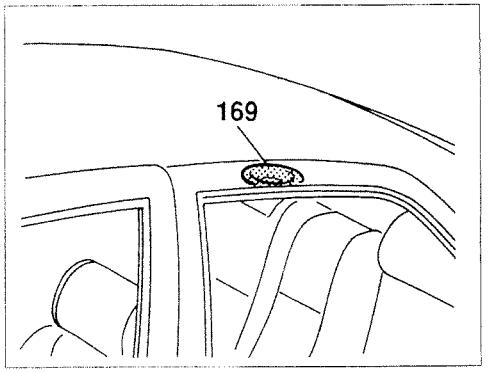

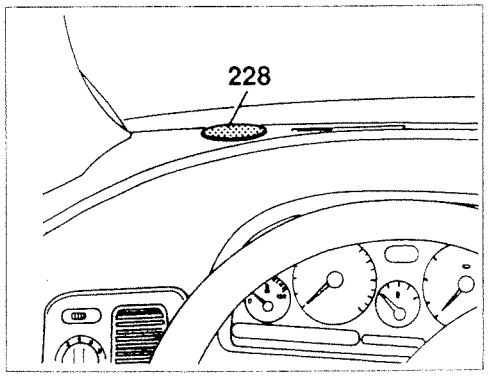

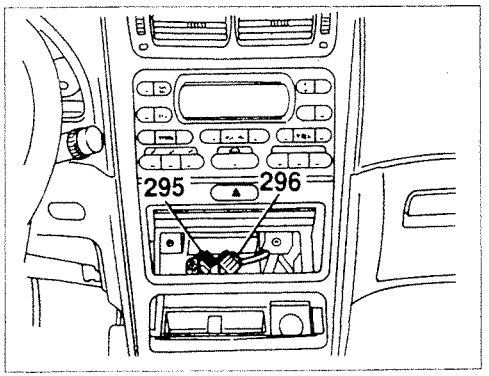

P3U038I01

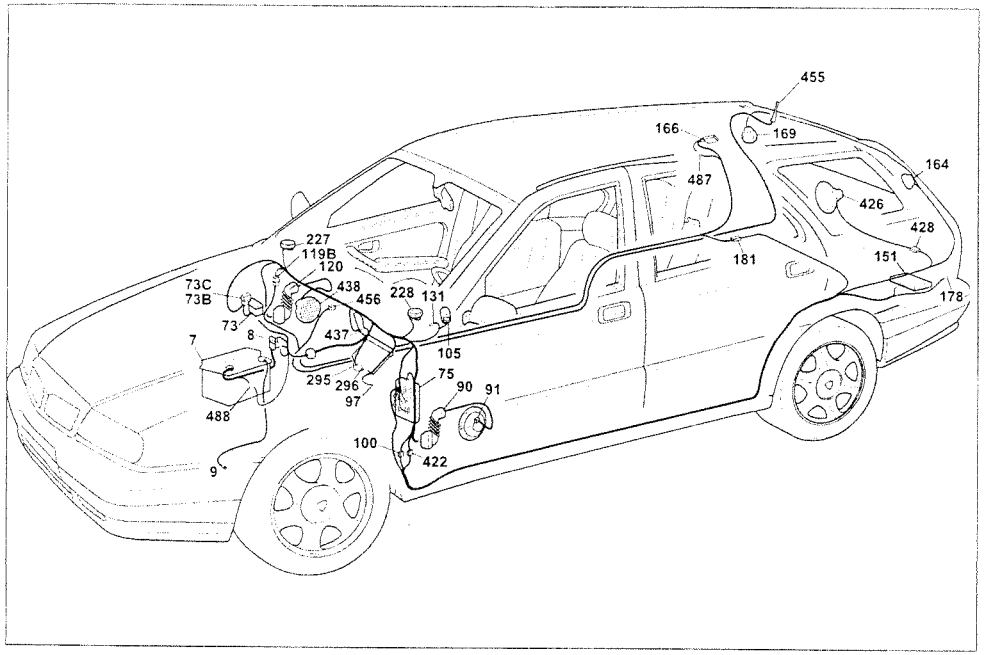

P3U039I01

Preparation for top of the range radio

Components key

7 Battery
8 Main connector block
9 Earth on bodyshell
73 Secondary connector block
73B 60A protective fuse for I.G.E. control unit / junction unit
73C 30A fuse protecting ignition switch / alarm device
75 Junction unit (dashboard)
90 Connection between dashboard and left front door cables
91 Speaker in left front door
97 Earth on floor
100 Connection between dashboard and left longitudinal cables
105 Ignition switch
119B Connection between dashboard and right longitudinal cables
120 Connection between dashboard and right front door cables
131 Earth on steering column support
151 Amplifier for radio
164 Left rear speaker
166 Amplifier for aerial in rearscreen
169 Right rear speaker
178 Left rear earth
181 Connection between left longitudinal and right longitudinal cables
227 Right front speaker
228 Left front speaker
295 Radio cables connection
296 Radio cables connection
422 Connection between dashboard / left longitudinal cables
426 Speaker in tailgate (woofer)
428 Connection between left longitudinal / left tailgate cables for speaker
437 Preparation for radio phone
438 Dual function speaker for radio and hands-free radio phone in right front door
455 Dual function aerial for radio and radio phone
456 Connector for radio phone aerial
487 Connector for electrically operated aerial supply
488 150A maxi fuse

N.D. Ultrasound welding taped in cable loom

90 Connection between dashboard and left front door cables

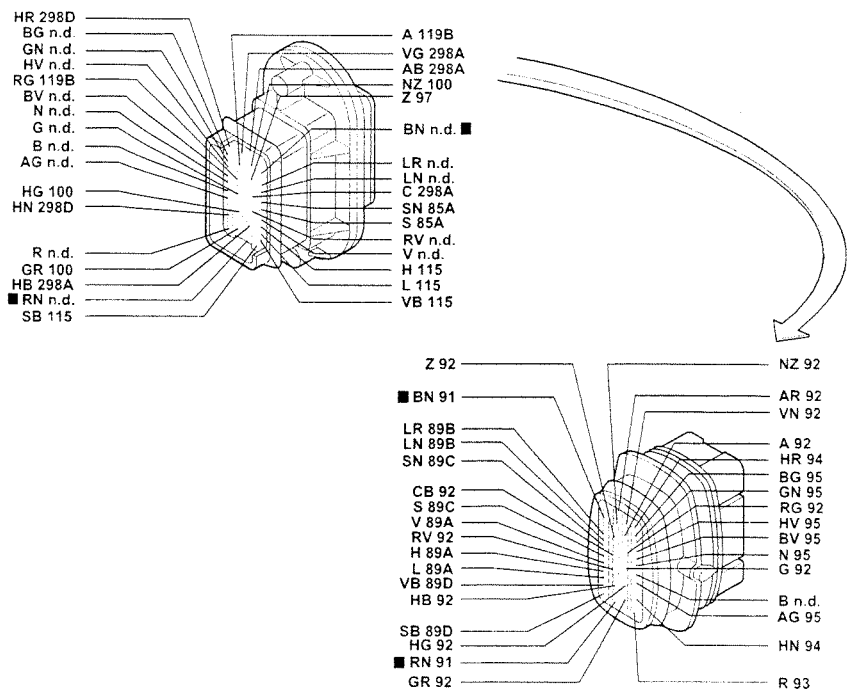

166A Rear cables connection in rearscreen

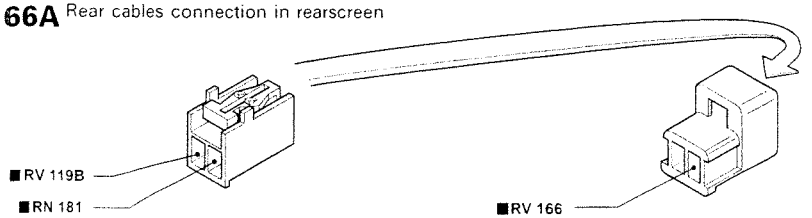

P3U040I01

■ The cables in the wiring diagram are marked

Naturally aspirated petrol versions

LANCIA-CODE device - (See key at end of wiring diagrams)

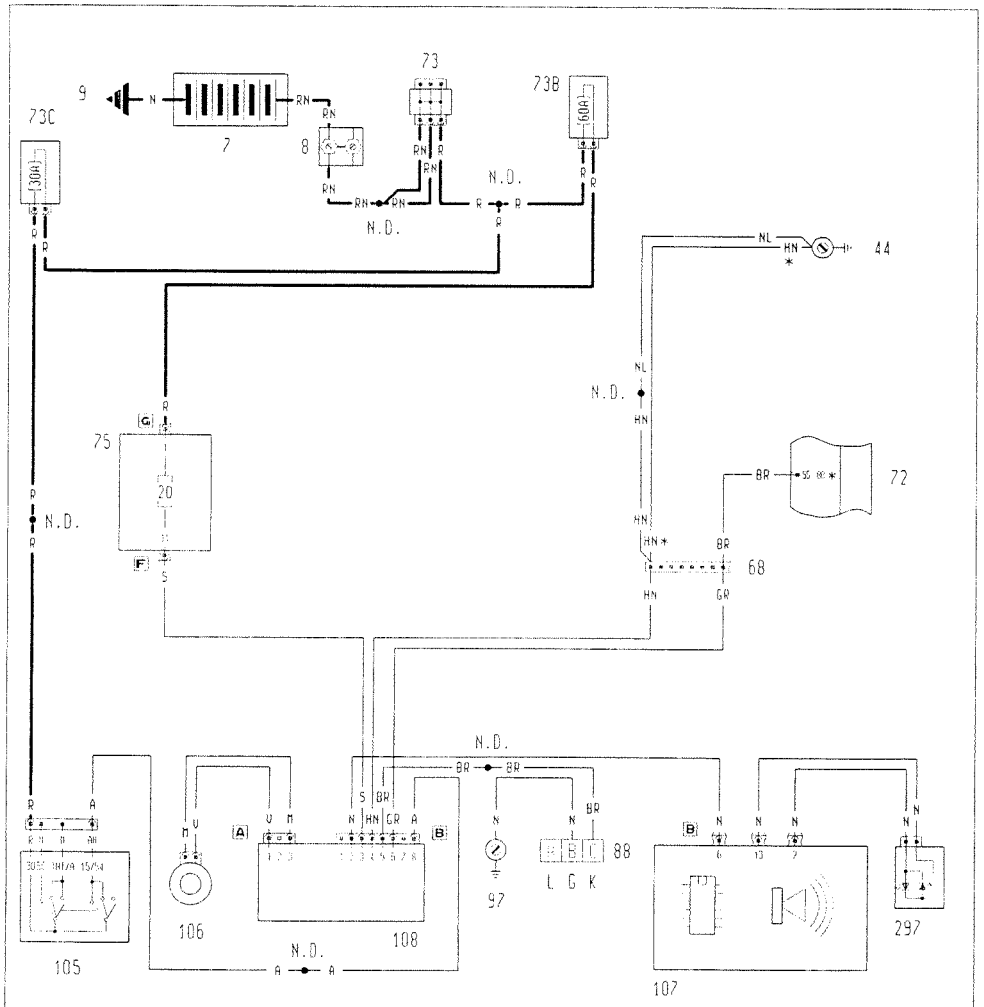

* Variant connections for the 2959 V6 24v version

P3U14IZ01

3U0411

Location of components

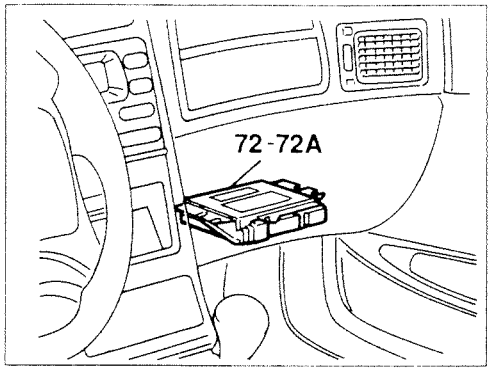

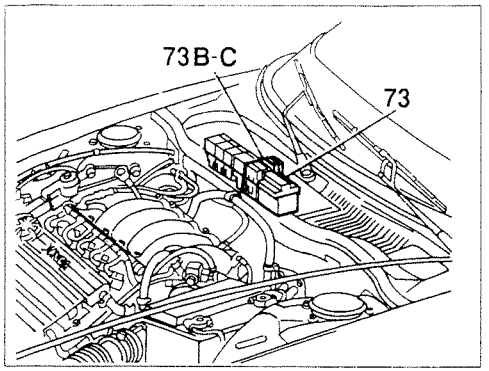

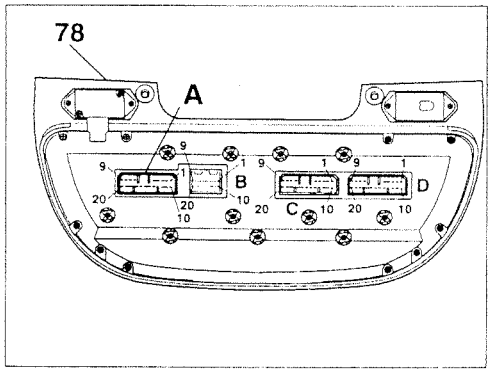

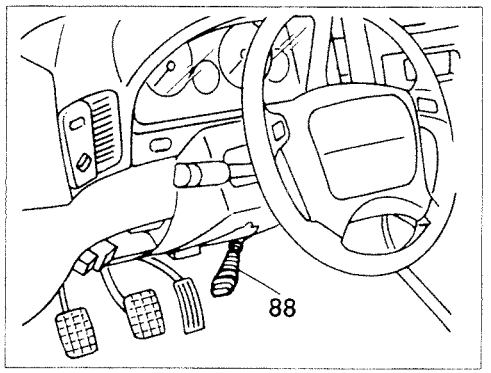

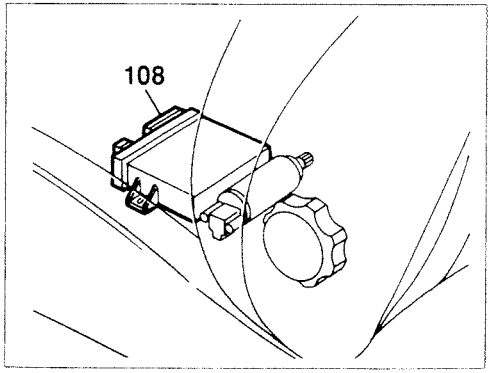

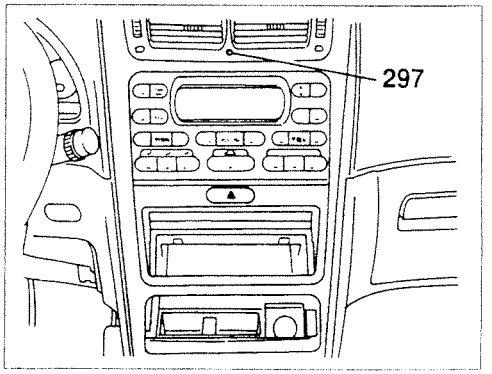

P3U042I01

Copyright by Fiat Auto

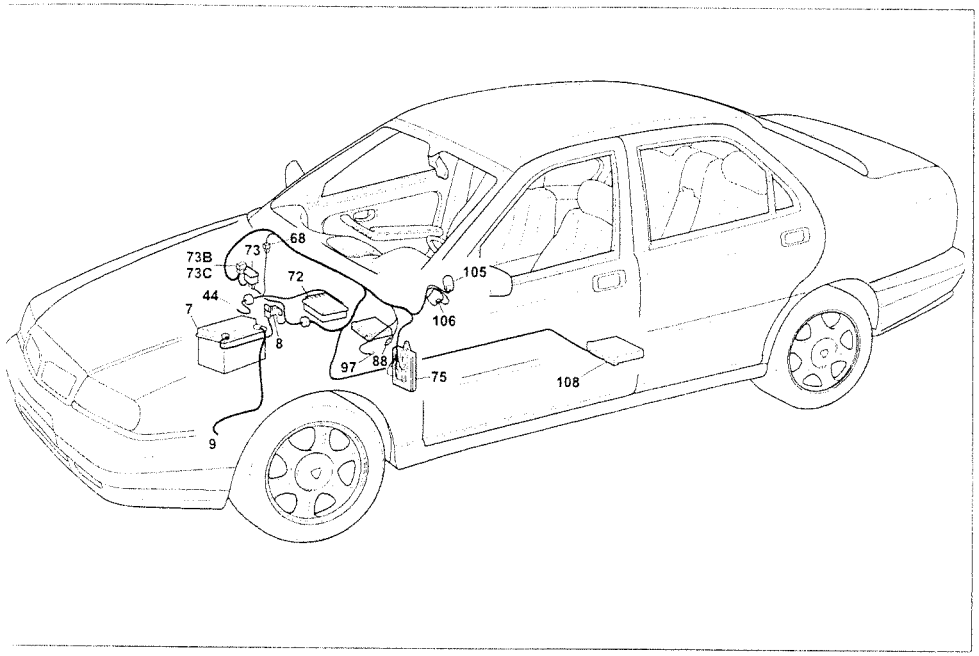

P3U043I01

LANCIA-CODE device

Components key

7 Battery
8 Main connector block
9 Earth on bodyshell
44 Power earth
68 Connection between dashboard and electronic injection cables
72 Fuel injection control unit
73 Secondary connector block
73B 60A protective fuse for I.G.E. control unit / junction unit
73C 30A fuse protecting ignition switch / alarm device
75 Junction unit (dashboard)
78 Instrument panel
X1 LANCIA-CODE failure warning light
88 Diagnostic socket
97 Earth on floor
105 Ignition switch
106 LANCIA-CODE aerial
107 Alarm control unit
108 LANCIA-CODE control unit
N.D. Ultrasound welding taped in cable loom

68 Connection between dashboard and electronic injection cables

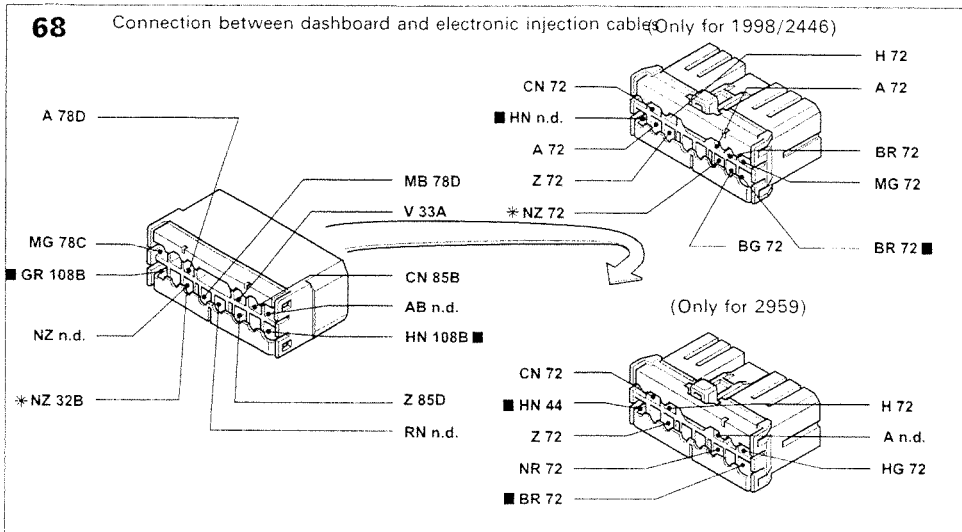

75F Junction unit (dashboard)

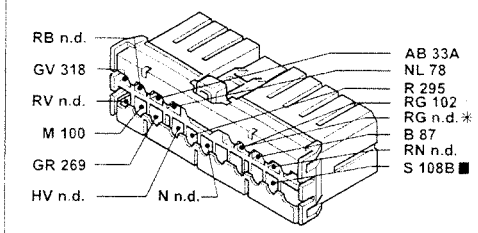

* Variant connection for 2959 versions with automatic transmission

75G Junction unit (dashboard)

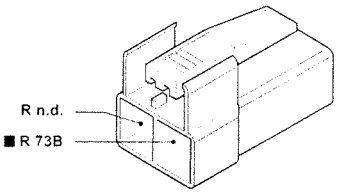

105 Ignition switch

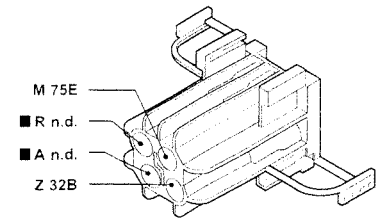

107B Alarm control unit

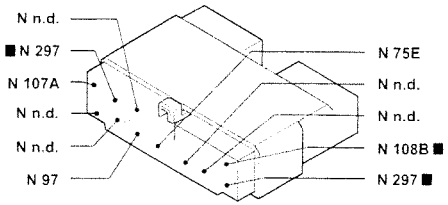

P3U044I01

■ The cables in the wiring diagram are marked

Turbo petrol versions

LANCIA-CODE device - (See key at end of wiring diagrams)

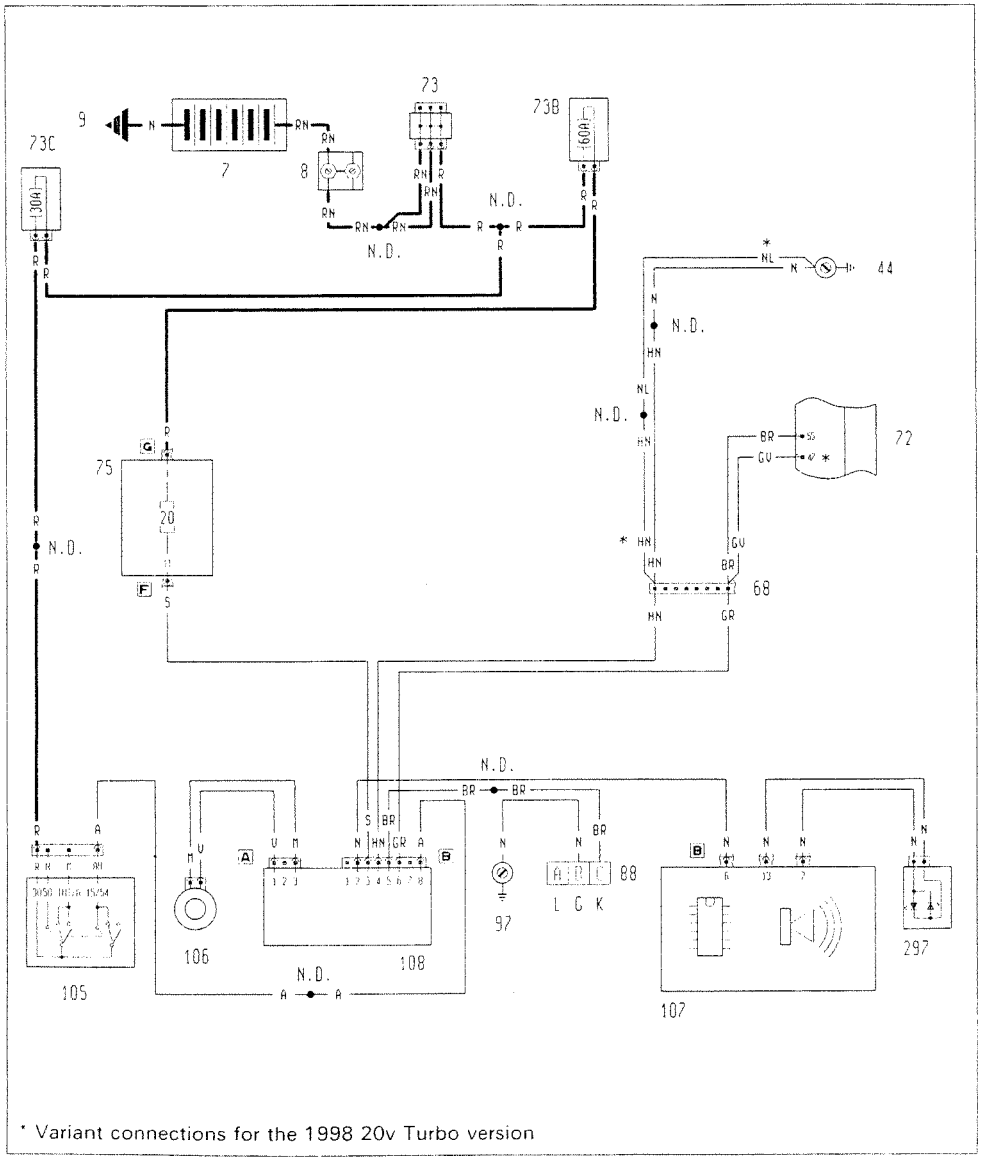

P3U151Z01

3U0451

Location of components

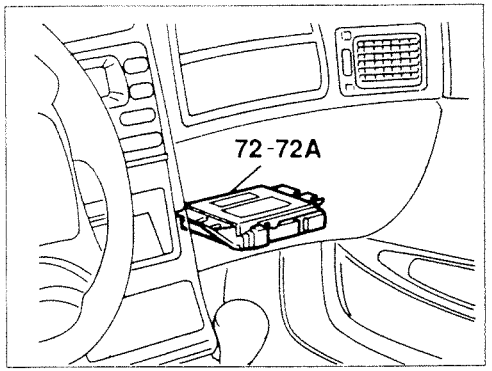

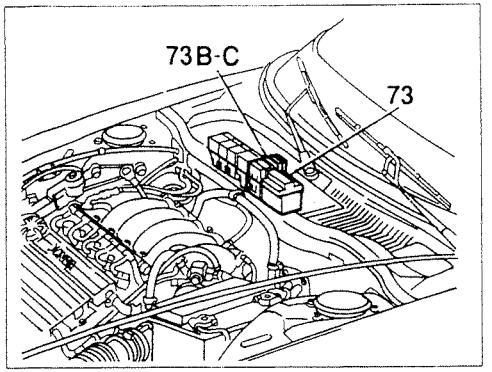

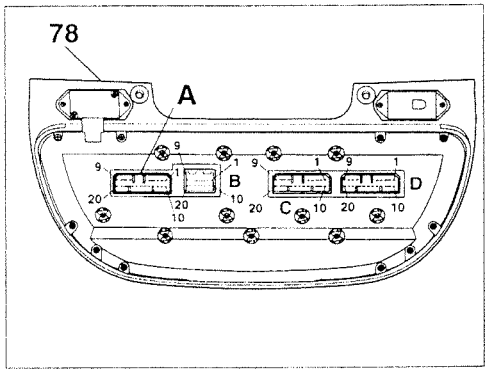

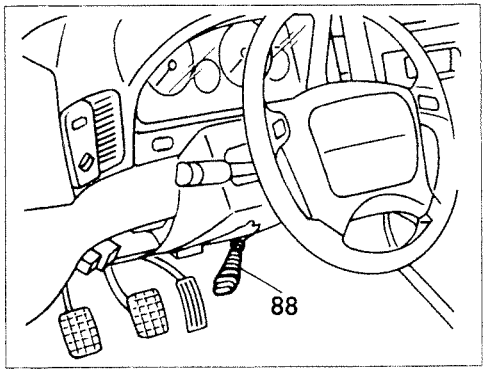

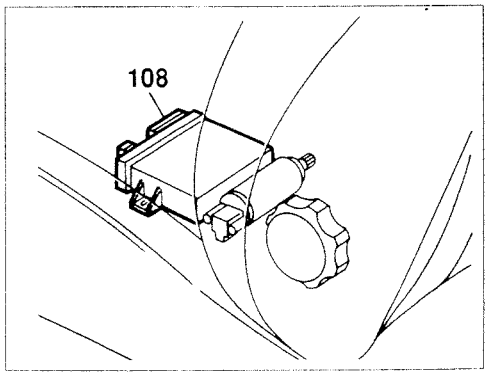

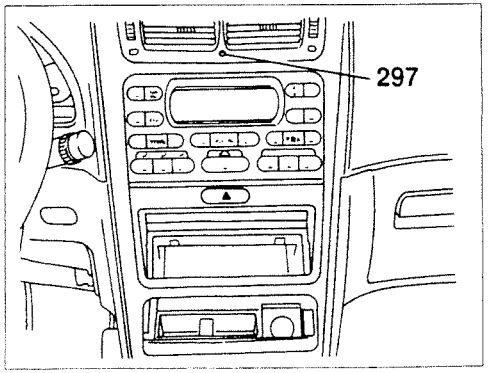

P3U046I01

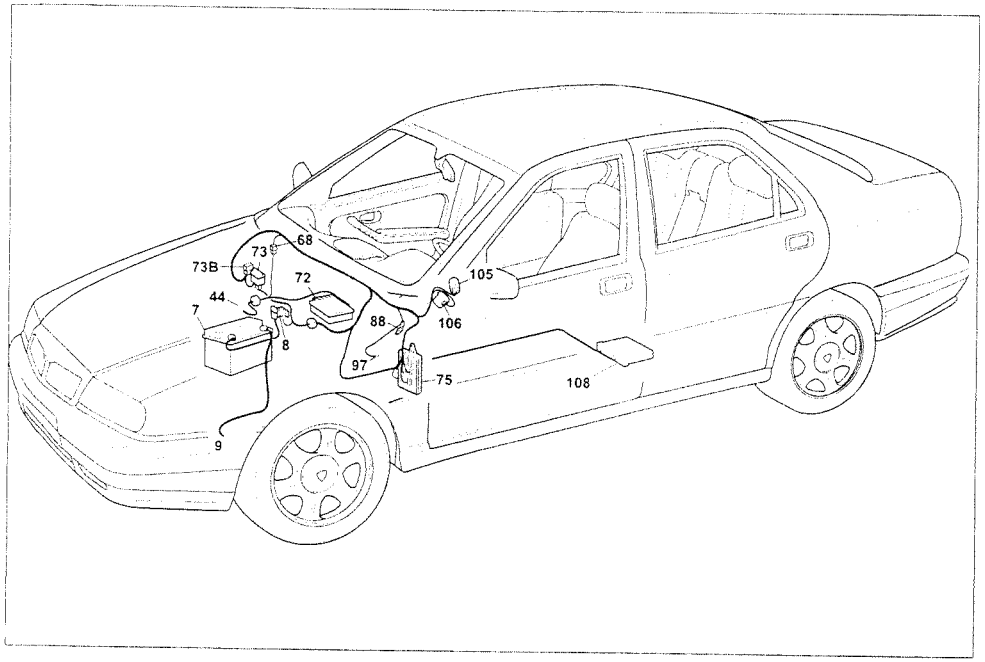

P3U047I01

LANCIA-CODE device
Components key

7 Battery
8 Main connector block
9 Earth on bodyshell
44 Power earth
68 Connection between dashboard and electronic injection cables
72 Fuel injection control unit
73 Secondary connector block
73B 60A protective fuse for I.G.E. control unit / junction unit
73C 30A fuse protecting ignition switch / alarm device
75 Junction unit (dashboard)
78 Instrument panel
X1 LANCIA-CODE failure warning light
88 Diagnostic socket
97 Earth on floor
105 Ignition switch
106 LANCIA CODE aerial
107 Alarm control unit
108 LANCIA-CODE control unit

N D Ultrasound welding taped in cable loom

68 Connection between dashboard and electronic injection cables

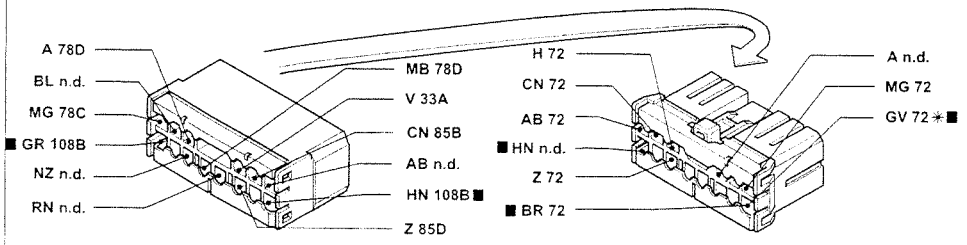

* Variant connection for 1998 20v T

73B 60A protective fuse for I.G.E. control unit / junction unit

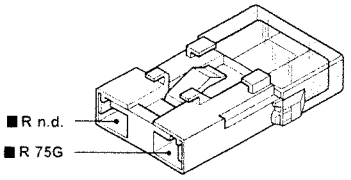

73C 30A fuse protecting ignition switch/alarm device

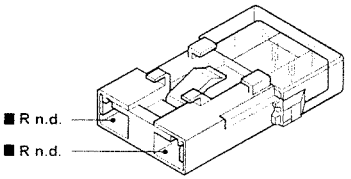

75F Junction unit (dashboard)

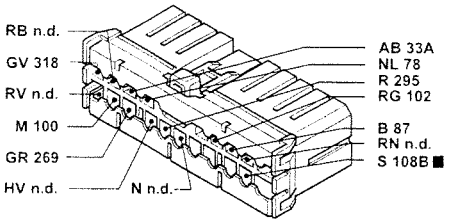

75G Junction unit (dashboard)

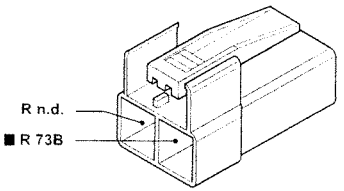

105 Ignition switch

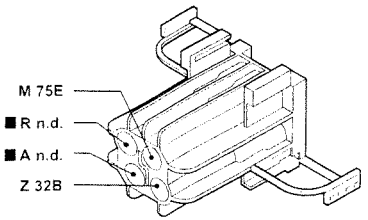

107B Alarm control unit

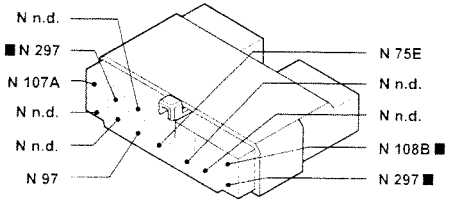

P3U048I01

■ The cables in the wiring diagram are marked

TD versions

LANCIA-CODE device - (See key at end of wiring diagrams)

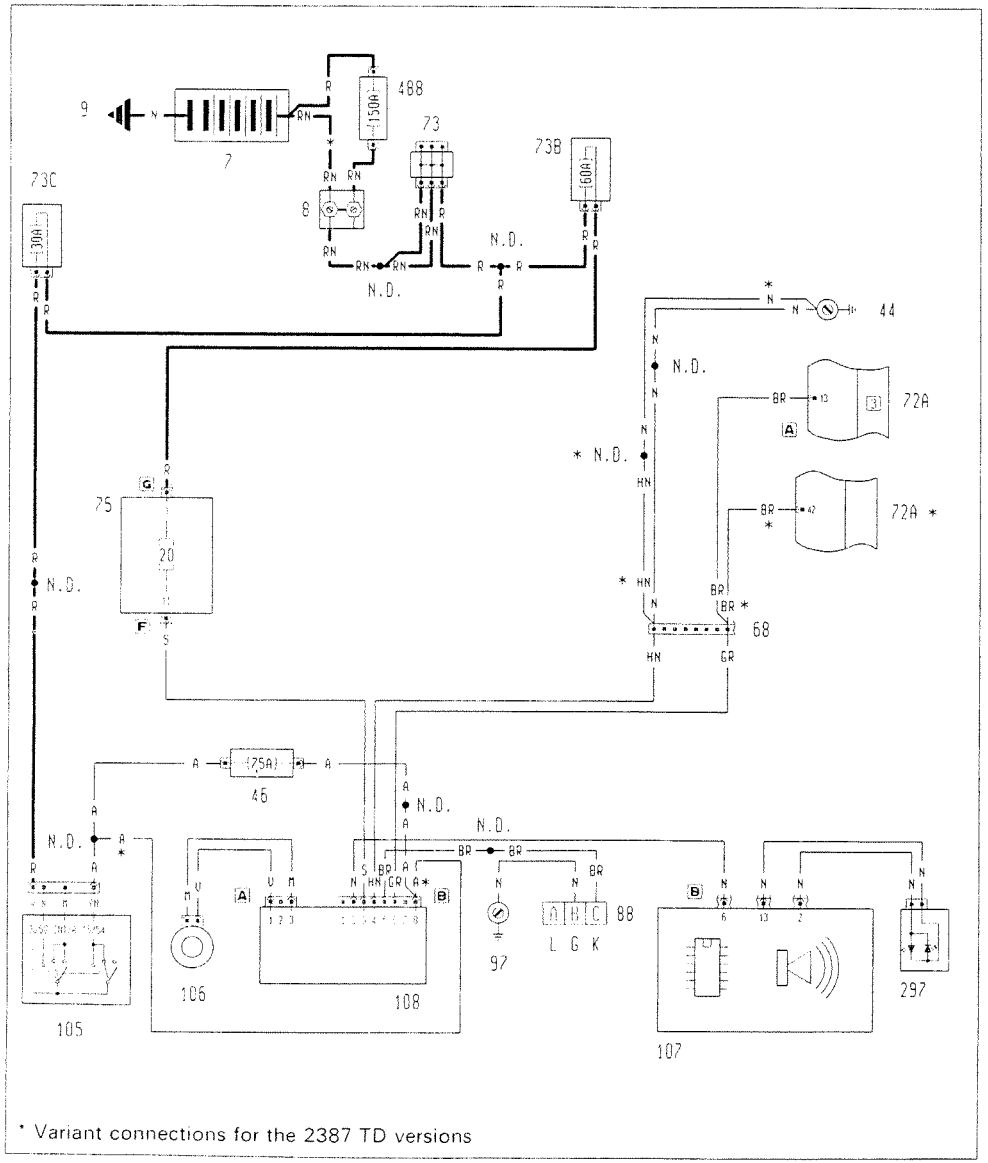

* Variant connections for the 2387 TD versions

3U049I

P3U16IZ01

Location of components

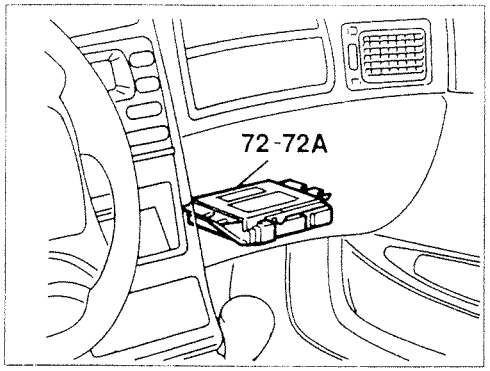

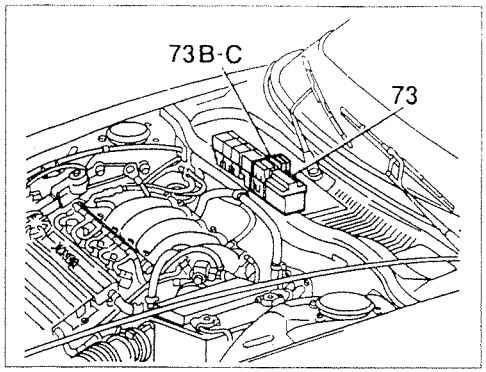

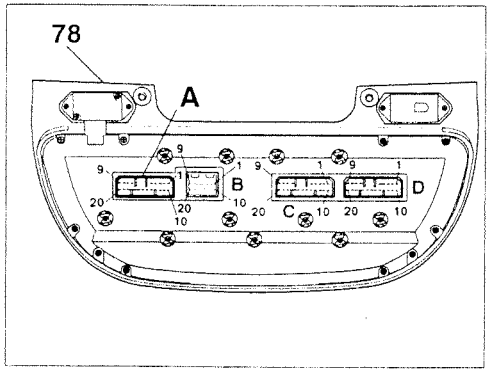

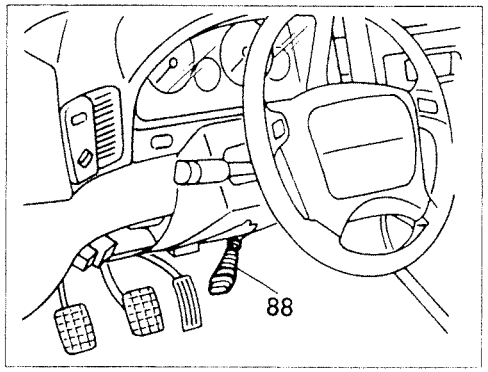

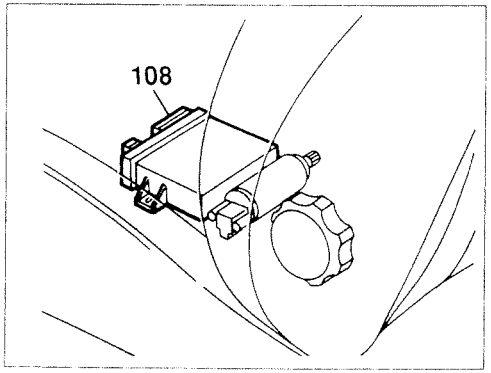

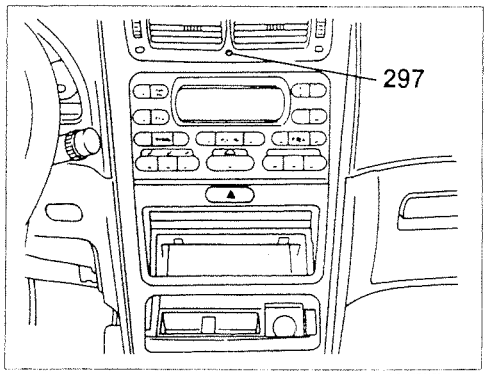

P3U050101

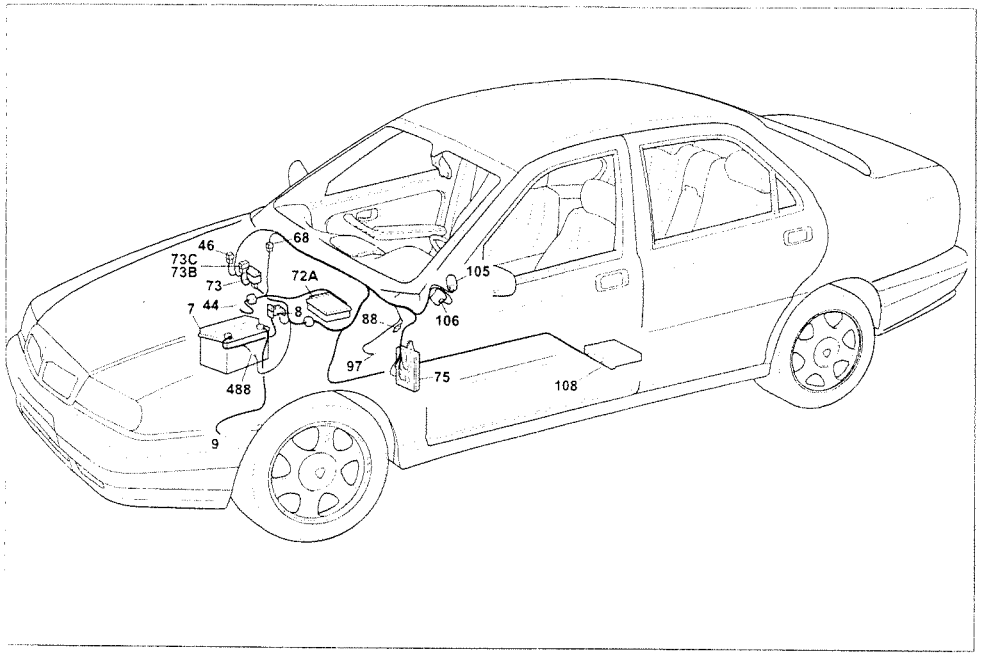

P3U051101

LANCIA-CODE device

Components key

7 Battery
8 Main connector block
9 Earth on bodyshell
44 Power earth
46 7.5A fuse protecting electronic injection and LANCIA-CODE control unit
68 Connection between dashboard and electronic injection cables
72A Fuel pump electronic control unit
73 Secondary connector block
73B 60A protective fuse for I.G.E. control unit / junction unit
73C 30A fuse protecting ignition switch / alarm device
75 Junction unit (dashboard)
78 Instrument panel
X1 LANCIA-CODE failure warning light
88 Diagnostic socket
97 Earth on floor
105 Ignition switch
106 LANCIA-CODE aerial
107 Alarm control unit
108 LANCIA-CODE control unit
488 150A maxi fuse

N.D. Ultrasound welding taped in cable loom

68 Connectin between dashboard and electronic injection cables

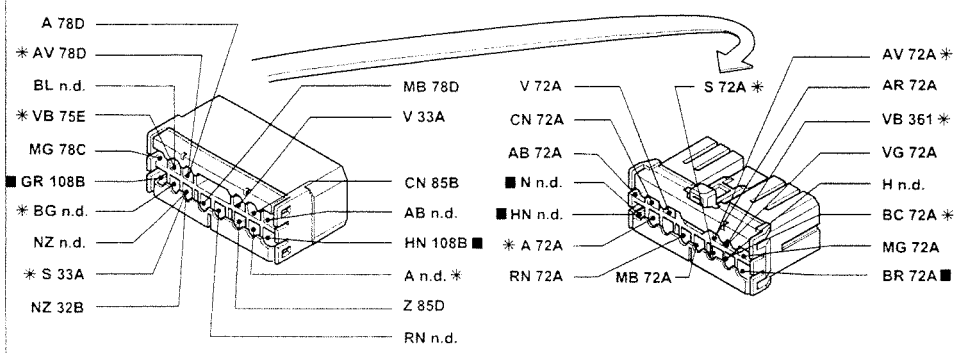

* Variant connection for 2387 JTD

75F Junction unit (dashboard)

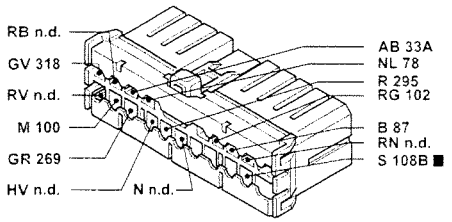

75G Junction unit (dashboard)

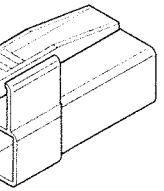

73B 60A protective fuse for I.G.E. control unit / junction unit

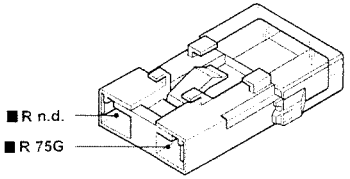

73C 30A fuse protecting ignition switch/alarm

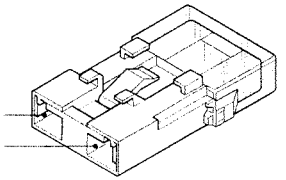

P3U052101

■ The cables in the wiring diagram are marked

Headlamp alignment - Electrically operated sun roof - (See key at end of wiring diagrams)

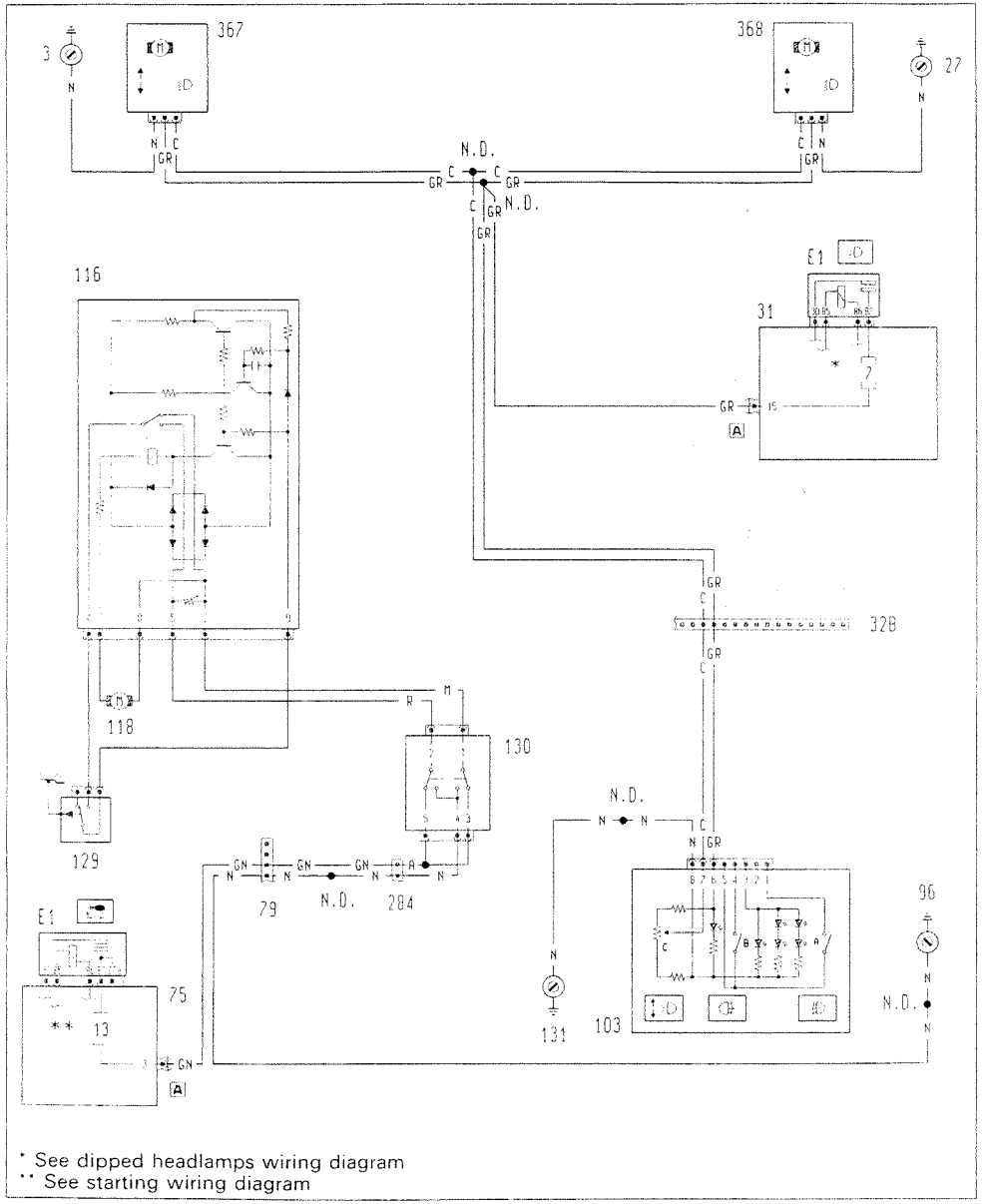

P3U17I201

3U0531

Location of components

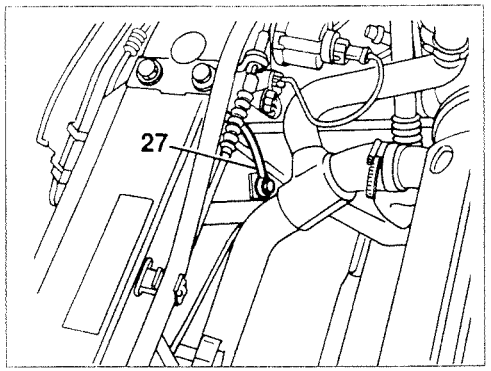

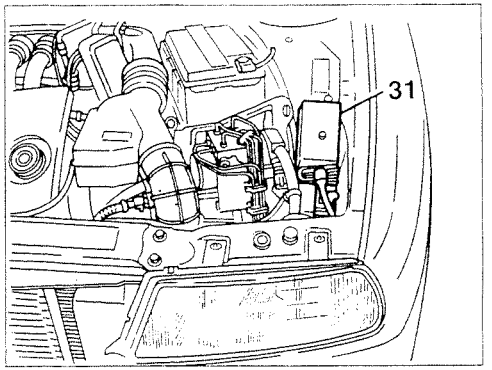

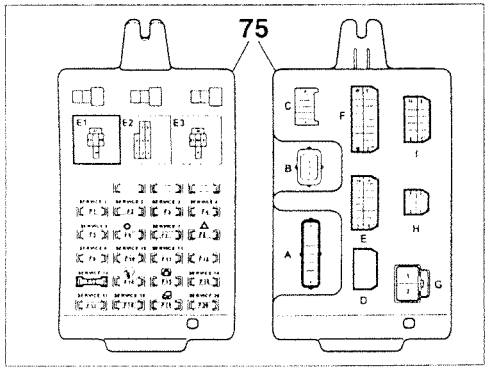

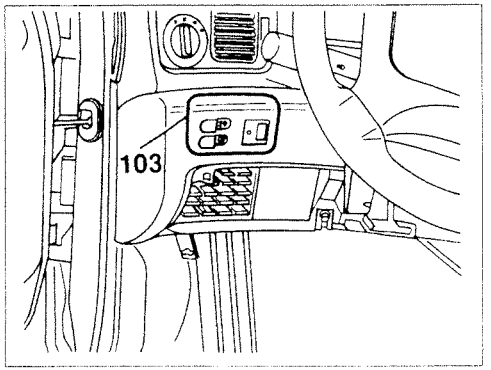

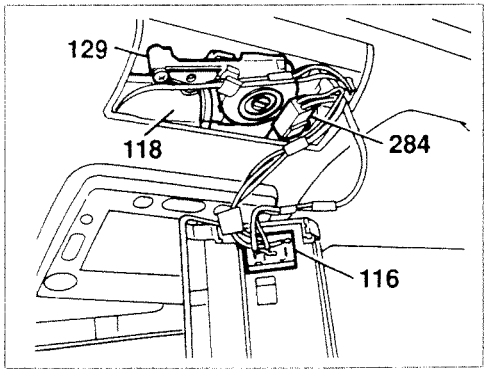

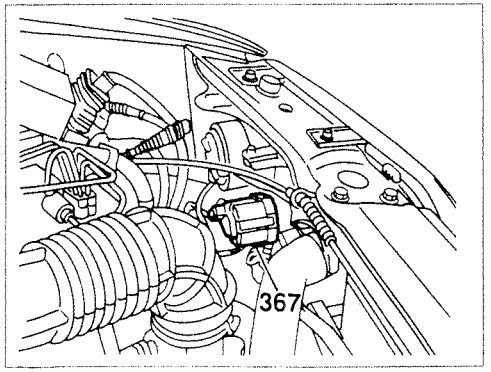

P3U054I01

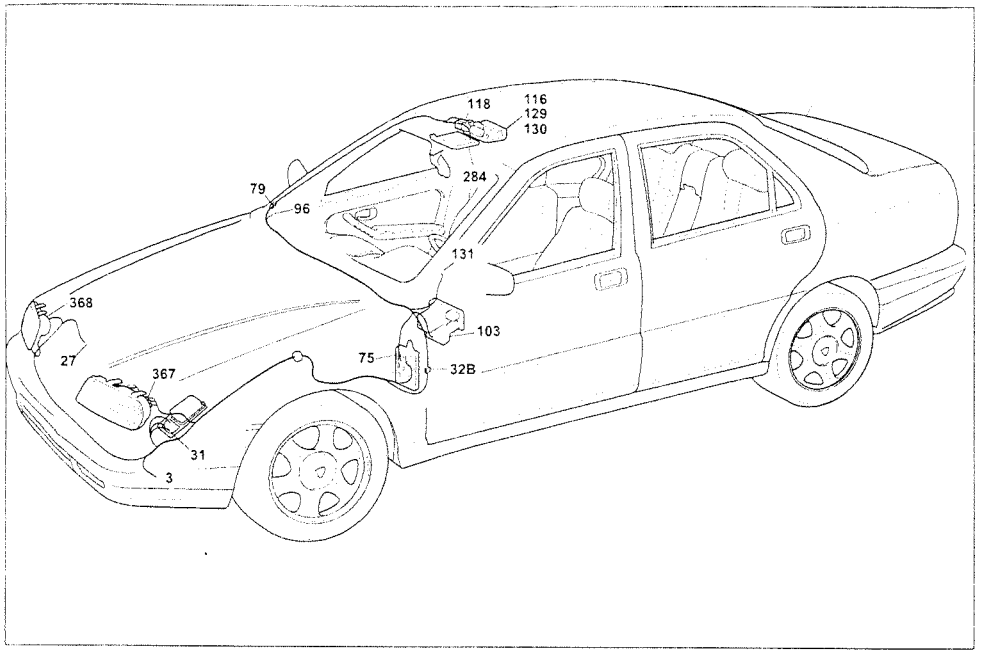

P3U055I01

Headlamp alignment - Electrically operated sun roof

Components key

3 Left front earth
27 Right front earth
31 Peripheral control unit (engine compartment)
E1 Dipped headlamps relay feed
32B Connection between dashboard and left engine compartment cables
75 Junction unit (dashboard)
E1 Ignition discharge relay
79 Connection between dashboard and courtesy light cables
96 Earth on carrier
103 Switch control unit
A Fog lights switch
B Rear fog lamps control switch
C Headlamp alignment control unit
116 Electrically operated sun roof electronic control unit
118 Electrically operated sun roof motor
129 Electrically operated sun roof end of travel switch
130 Electrically operated sun roof control button
131 Earth on steering column support
284 Preparation for electrically operated sun roof
367 Left headlamp alignment
368 Right headlamp alignment

N.D. Ultrasound welding taped in cable loom

32B Connection between dashboard and left engine compartment cables

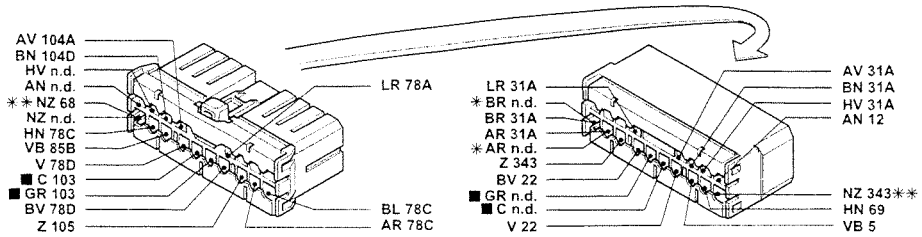

* Variant connection for Turbo Diesel versions
** Variant connection for 1998/2446/2959 versions with automatic transmission

79 Connection between dashboard and courtesy light cables

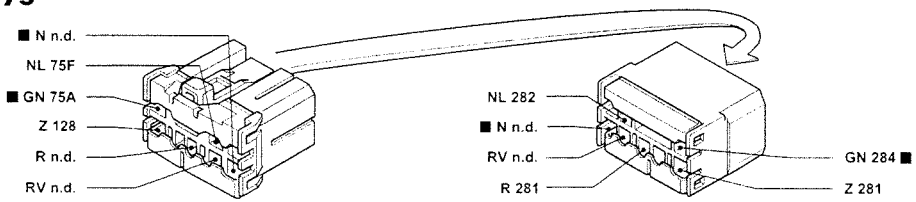

75A Junction unit (dashboard)

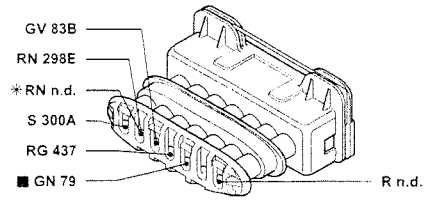

* Variant connection for COUPE' versions

103 Switch control unit

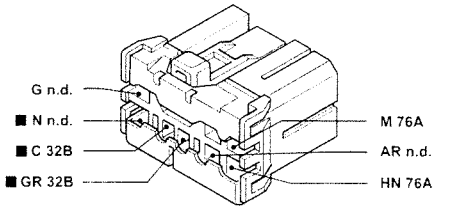

284 Preparation for electrically operated sun roof

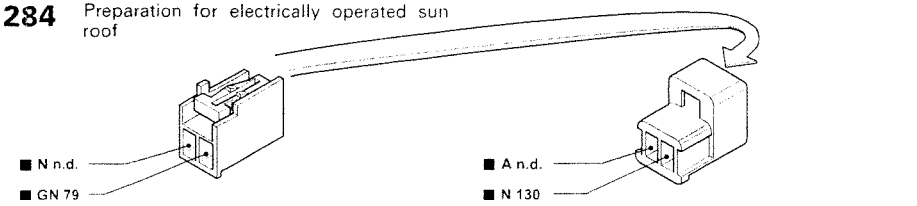

P3U056I01

■ The cables in the wiring diagram are marked

Anti-lock brakes (A.B.S.) - (See key at end of wiring diagrams)

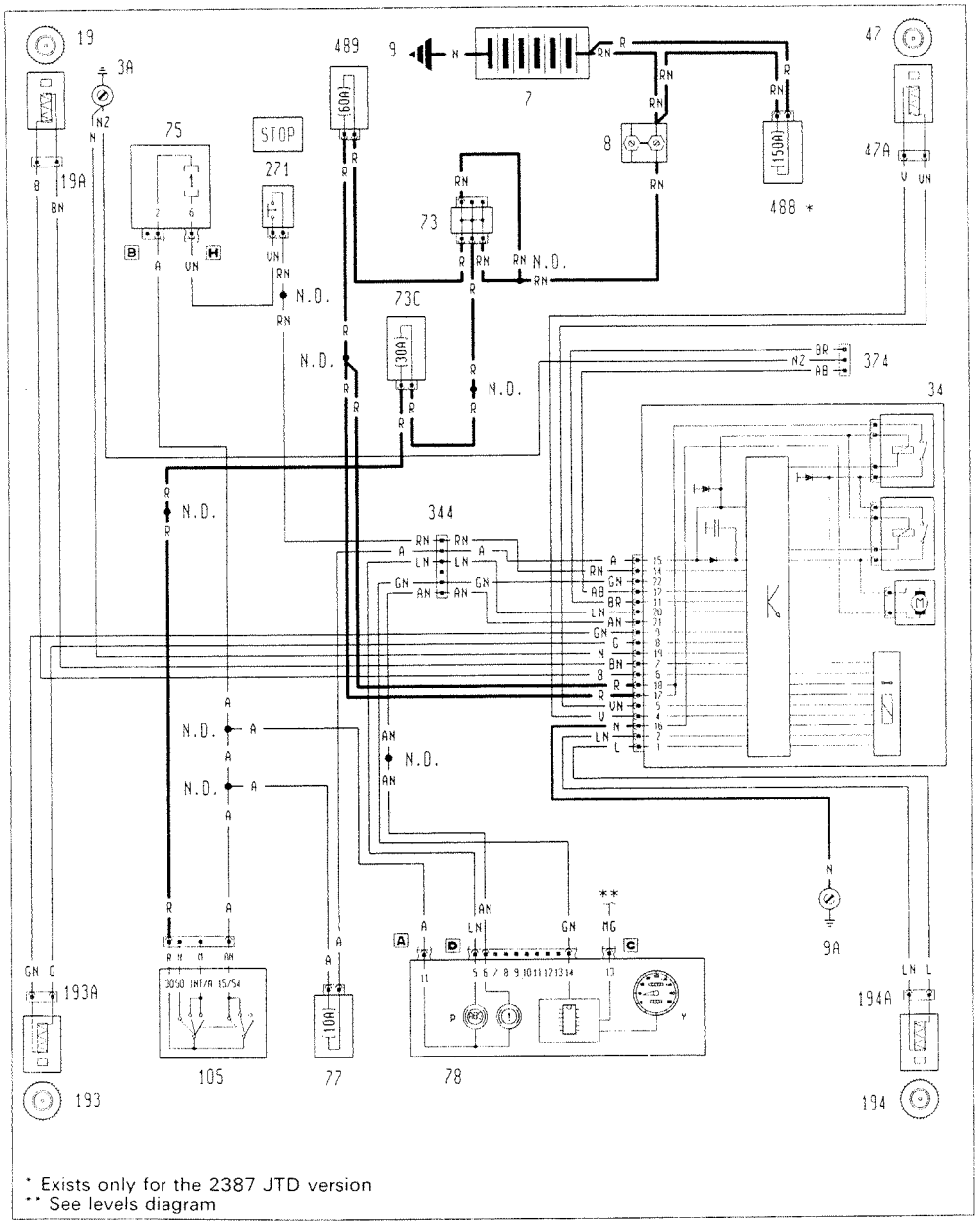

* Exists only for the 2387 JTD version
** See levels diagram

P3U18IZ01

3U0571

Location of components

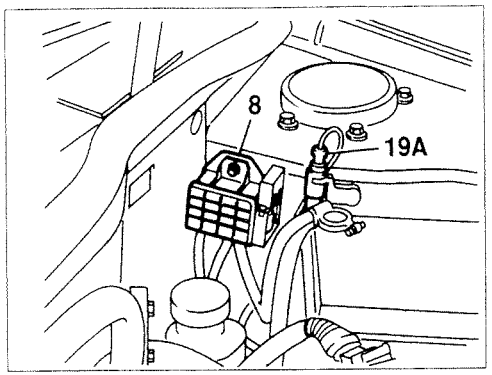

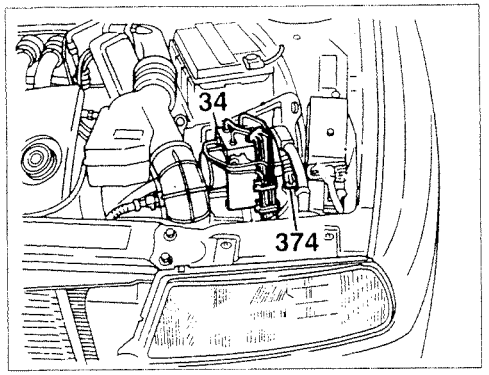

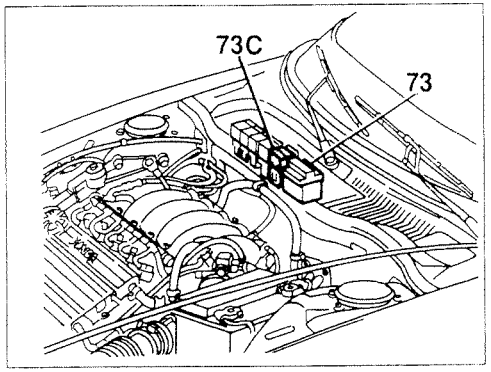

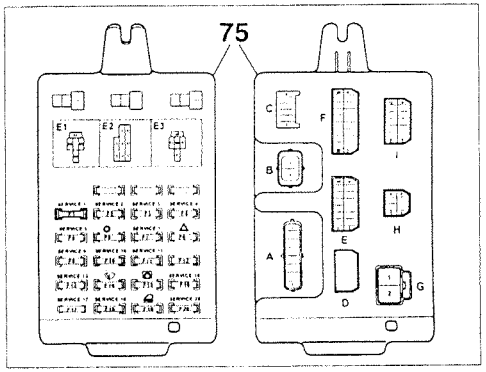

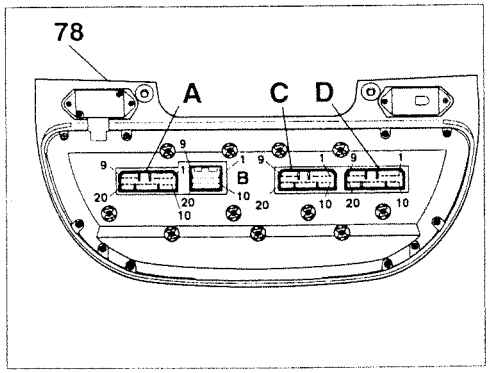

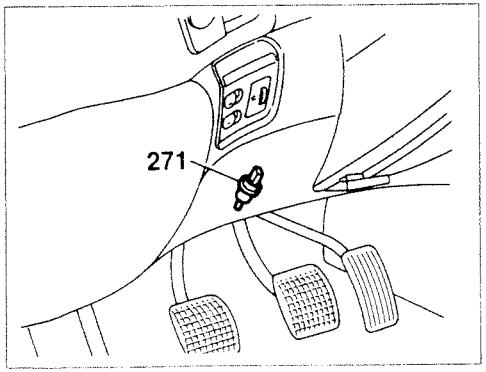

P3U058I01

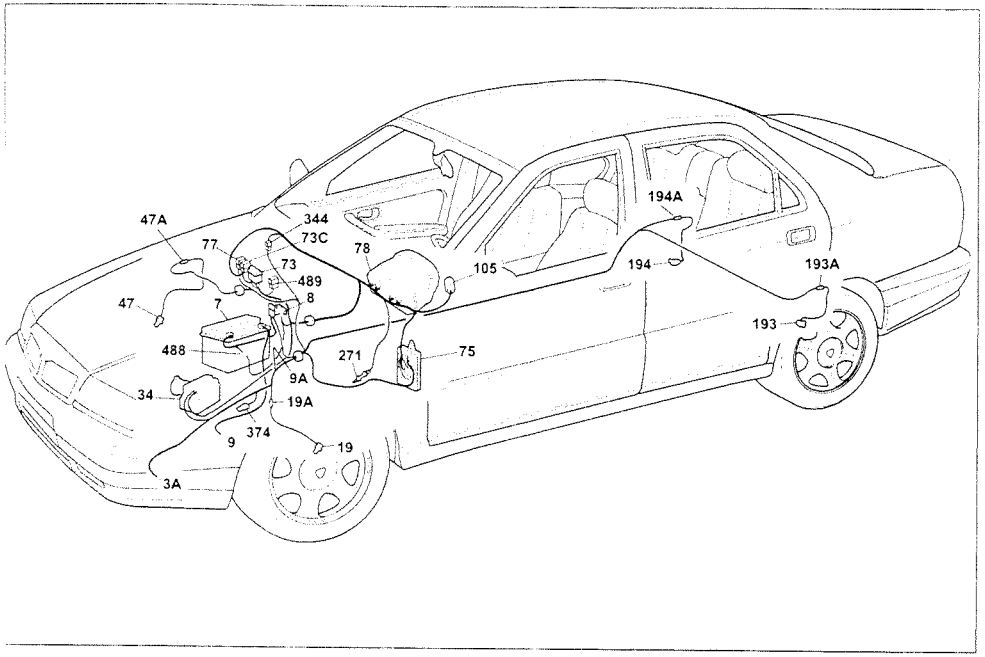

P3U059I01

Anti-lock brakes (A.B.S.)

Components key

3A Left front earth for anti-lock brakes (A.B.S.)
7 Battery
8 Main connector block
9 Earth on bodyshell
9A Earth on side panel for anti-lock brakes (A.B.S.)
19 Sensor on left front wheel for anti-lock brakes (A.B.S.)
19A Connection for A.B.S. cable with sensor on left front wheel for anti-lock brakes (A.B.S.)
34 Electronic control unit for anti-lock brakes (A.B.S.)
47 Sensor on right front wheel for anti-lock brakes (A.B.S.)
47A Connection for A.B.S. cable with sensor on right front wheel for anti-lock brakes (A.B.S.)
73 Secondary connector block
73C 30A fuse protecting ignition switch / alarm device
75 Junction unit (dashboard)
77 10A fuse protecting anti-lock brakes (A.B.S.)
78 Instrument panel
P Anti-lock braking system failure warning light (A.B.S.)
O Insufficient brake fluid level warning light
Y Electronic tachometer
105 Ignition switch
193 Sensor on left rear wheel for anti-lock brakes (To.B.S.)
193A Connection for A.B.S. cable with sensor on left rear wheel for anti-lock brakes (A.B.S.)
194 Sensor on right rear wheel for anti-lock brakes (A.B.S.)
194A Connection for A.B.S. cable with sensor on right rear wheel for anti-lock brakes (A.B.S.)
271 Brake lights switch
344 Connection between dashboard and anti-lock brakes cables (A.B.S.)
374 Diagnostic socket
488 150A maxi fuse

N.D. Ultrasound welding taped in cable loom

75B Junction unit (dashboard)

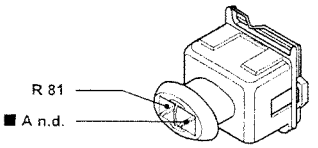

75H Junction unit (dashboard)

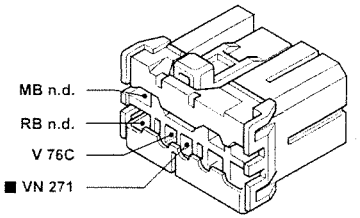

78A Trailer direction indicator warning light

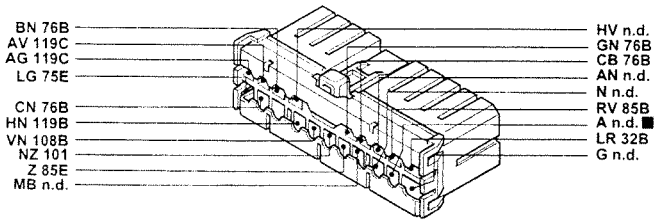

78D Fog lights warning light

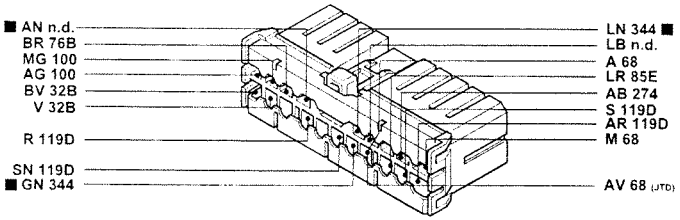

344 Connection between dashboard and anti-lock brakes cables (A.B.S.)

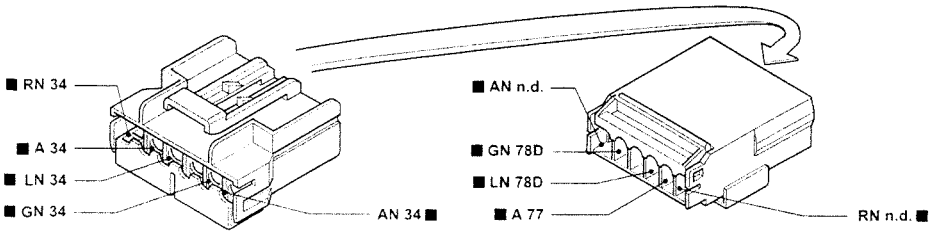

P3U060I01

■ The cables in the wiring diagram are marked

Preparation for tow hook - (See key at end of wiring diagrams)

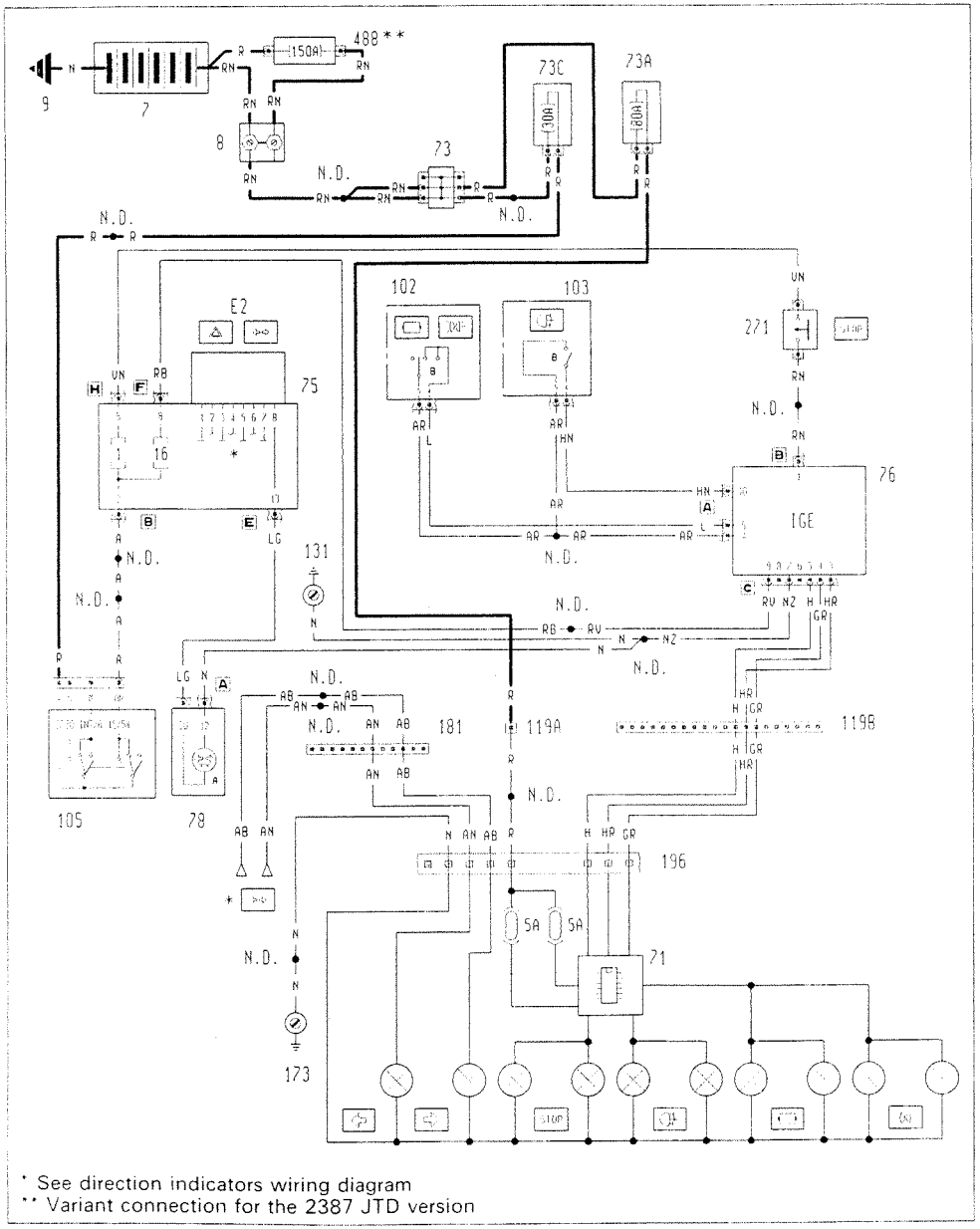

* See direction indicators wiring diagram
** Variant connection for the 2387 JTD version

P3U191Z01

3U617I

Location of components

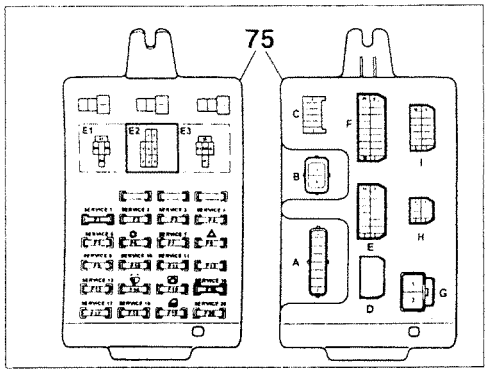

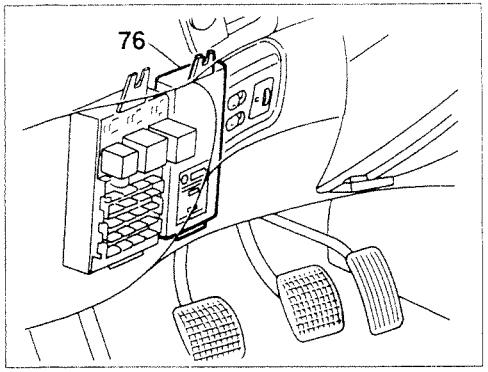

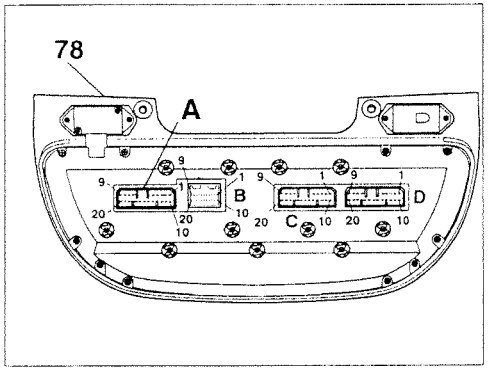

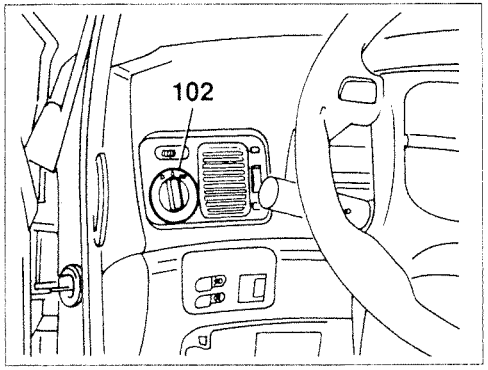

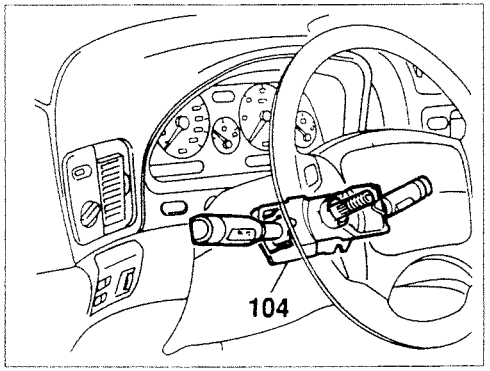

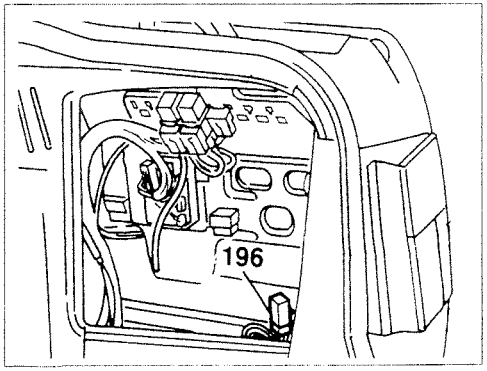

P3U062I01

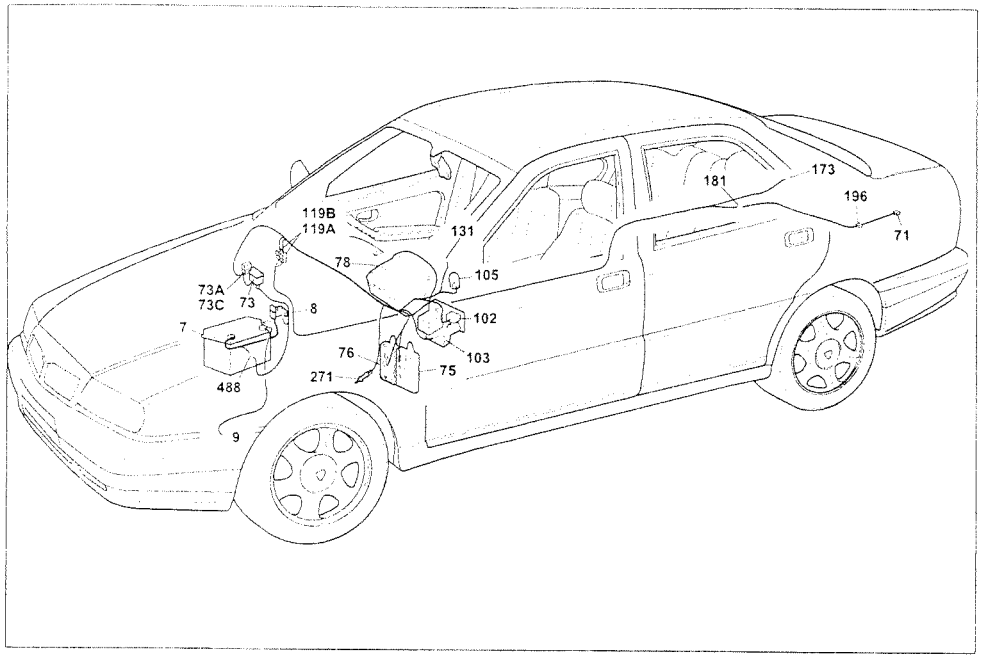

P3U063I01

Preparation for tow hook

Components key

7 Battery
8 Main connector block
9 Earth on bodyshell
71 Control unit for preparation for tow hook
73 Secondary connector block
73A 80A fuse protecting rear services
73C 30A fuse protecting ignition switch / alarm device
75 Junction unit (dashboard)
E2 Intermittent device for direction indicators - hazard warning lights
76 I.G.E. control unit
78 Instrument panel
A Trailer direction indicators warning light
102 Exterior lights control unit
103 Switch control unit
105 Ignition switch
119A Connection between dashboard and right longitudinal cables
119B Connection between dashboard and right longitudinal cables
131 Earth on steering column support
173 Right rear earth
181 Connection between left longitudinal and right longitudinal cables
196 Preparation for trailer
271 Brake lights switch
488 150A maxi fuse

N.D. Ultrasound welding taperl in cable loom

119B Connection between dashboard and right longitudinal cables

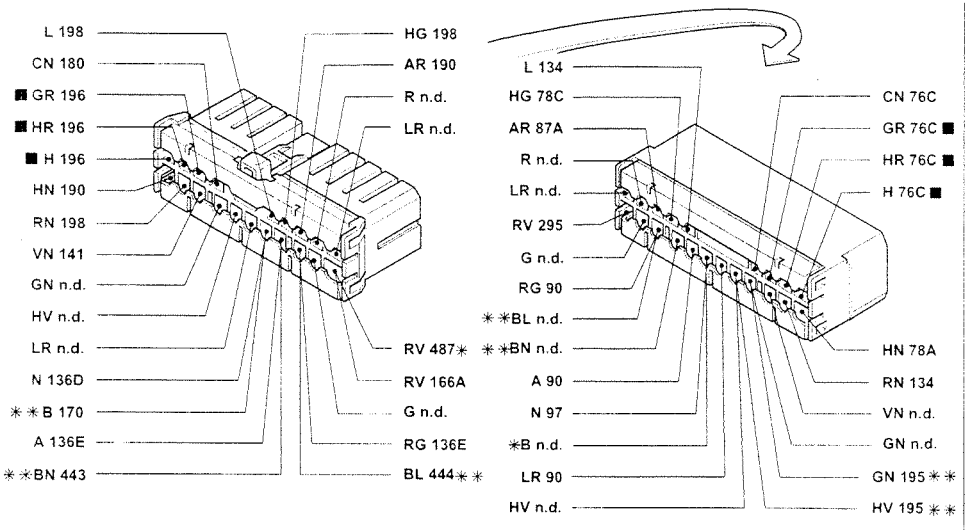

' Variant connection for Station Wagon versions

'' Variant connection for COUPE' versions

119A Connection between dashboard and right longitudinal cables

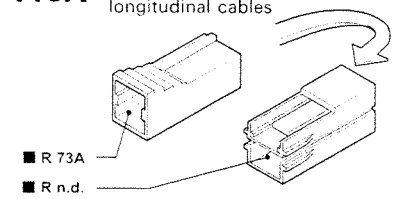

196 Preparation for trailer

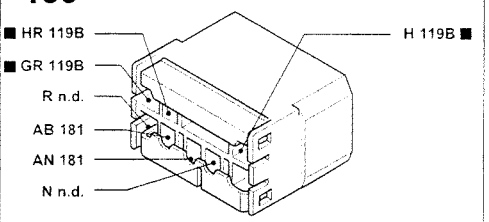

181 Connection between left longitudinal and right longitudinal cables

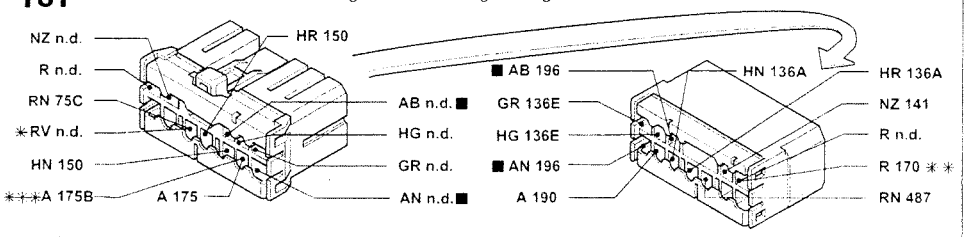

' Variant connection for versions with top of the range radio
'' Variant connection for COUPE' versions
''' Variant connection for Station Wagon versions

P3U064I01

■ The cables in the wiring diagram are marked

Automatic heater - (See key at end of wiring diagrams)

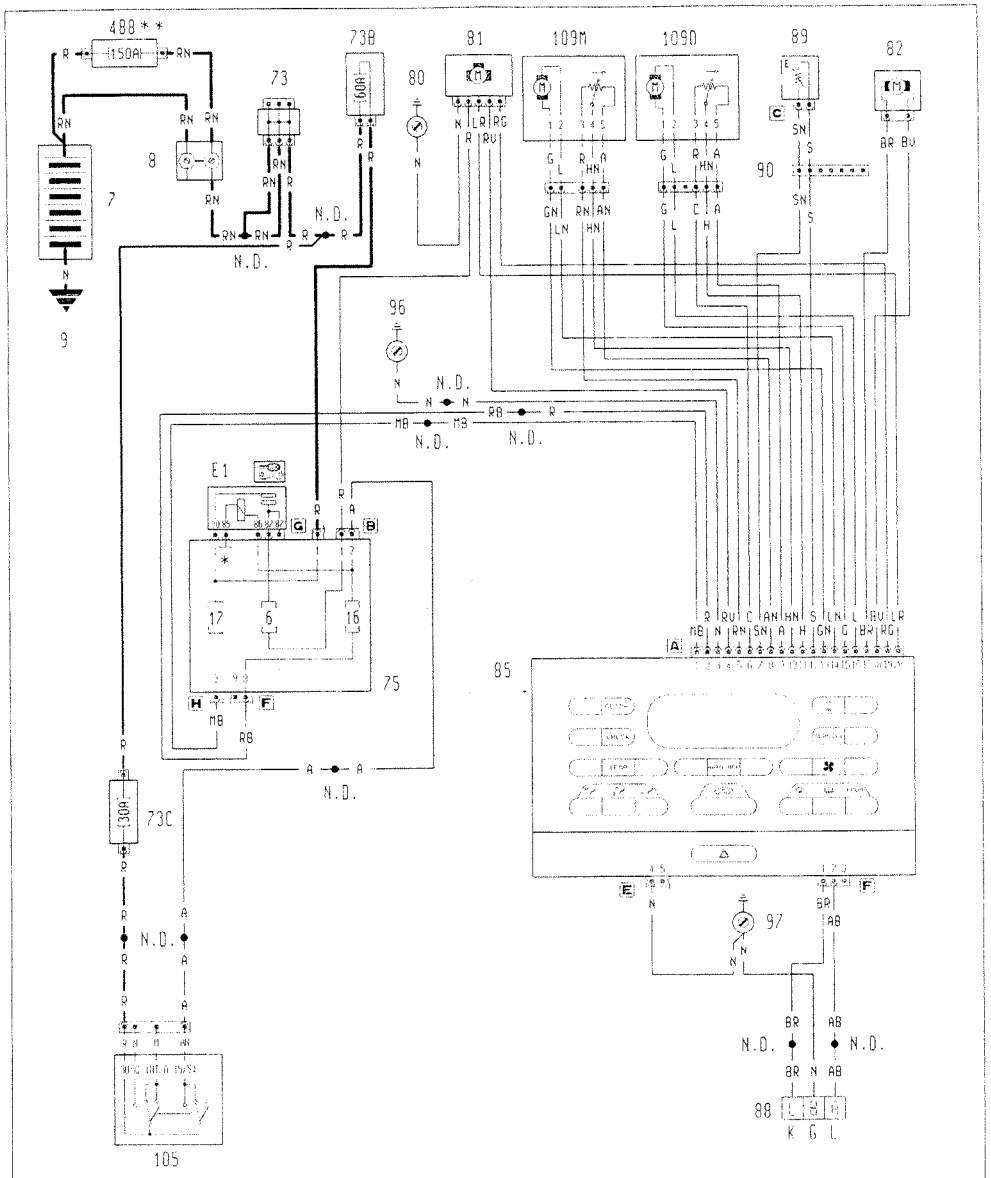

* See starting wiring diagram
** Variant connection for the 2387 JTD version

P3U201Z01

Location of components

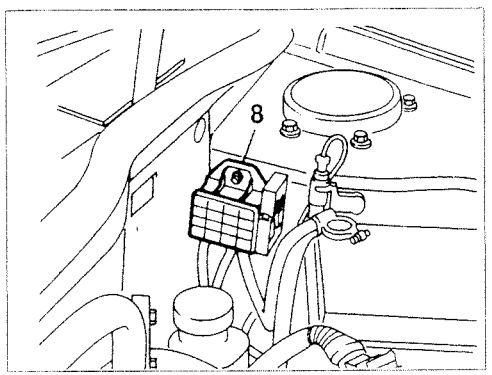

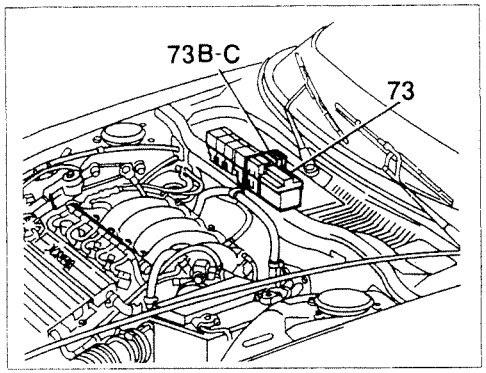

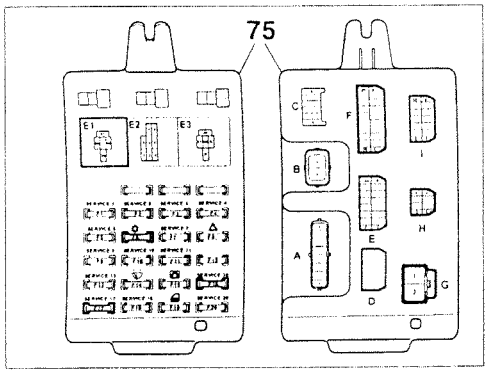

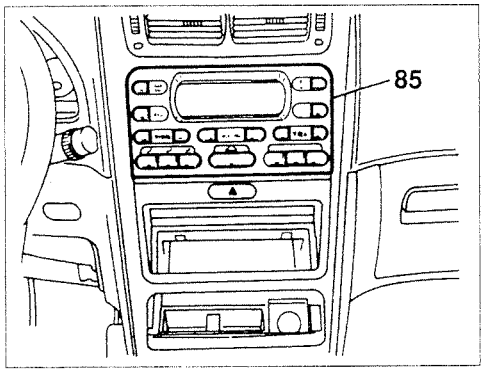

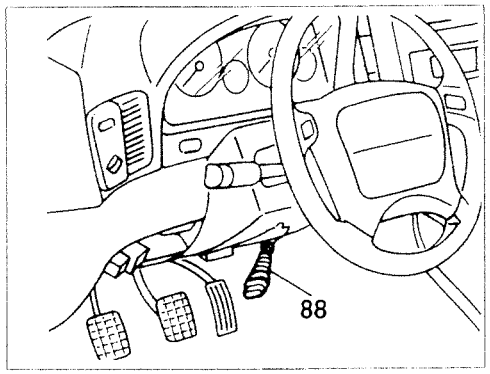

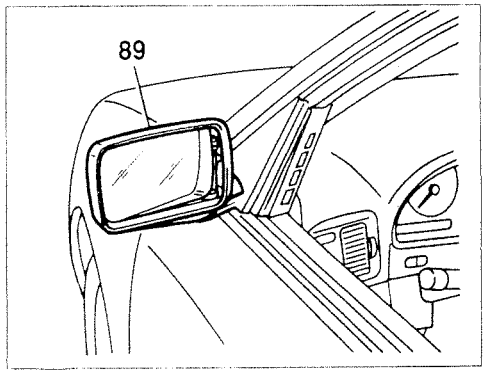

P3U066I01

3U065I

Copyright by Fiat Auto

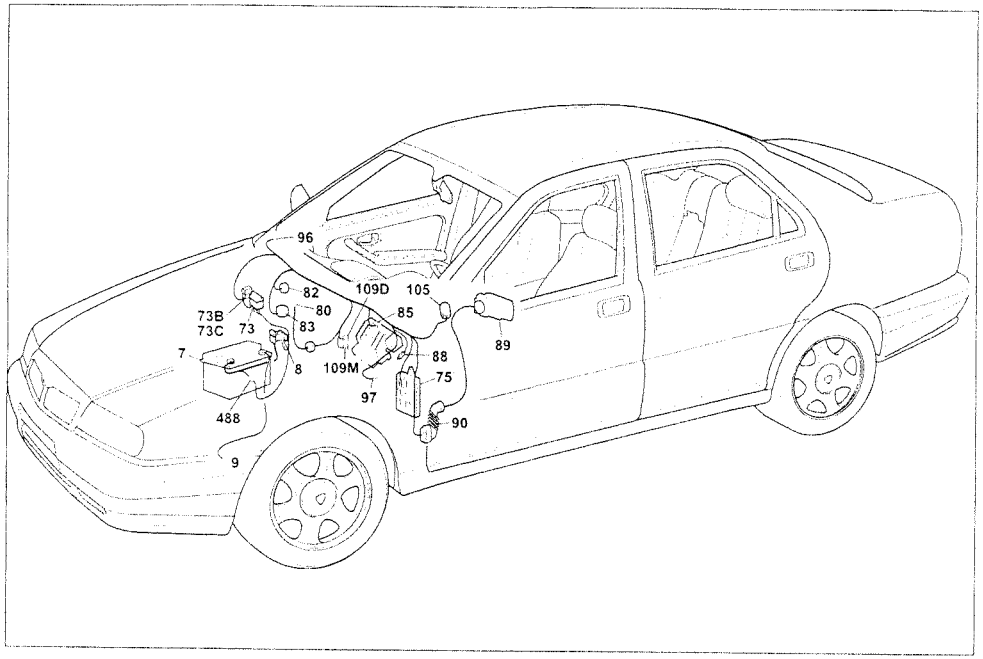

P3U0067I01

Automatic heater

Components key

7 Battery
8 Main connector block
9 Earth on bodyshell
73 Secondary connector block
73B 60A protective fuse for I.G.E. control unit / junction unit
73C 30A fuse protecting ignition switch / alarm device
75 Junction unit (dashboard)
E1 Ignition discharge relay
80 Power earth in dashboard
81 Climate control fan (Brushless)
82 Air recirculation motor
85 Infocenter control unit
88 Diagnostic socket
89 Left rear view mirror
90 Connection between dashboard and left front door cables
96 Earth on carrier
97 Earth on floor
105 Ignition switch
109D Distribution / mixture motor
109M Distribution / mixture motor
488 150A maxi fuse

N.D. Ultrasound welding taped in cable loom

90 Connection between dashboard and left front door cables

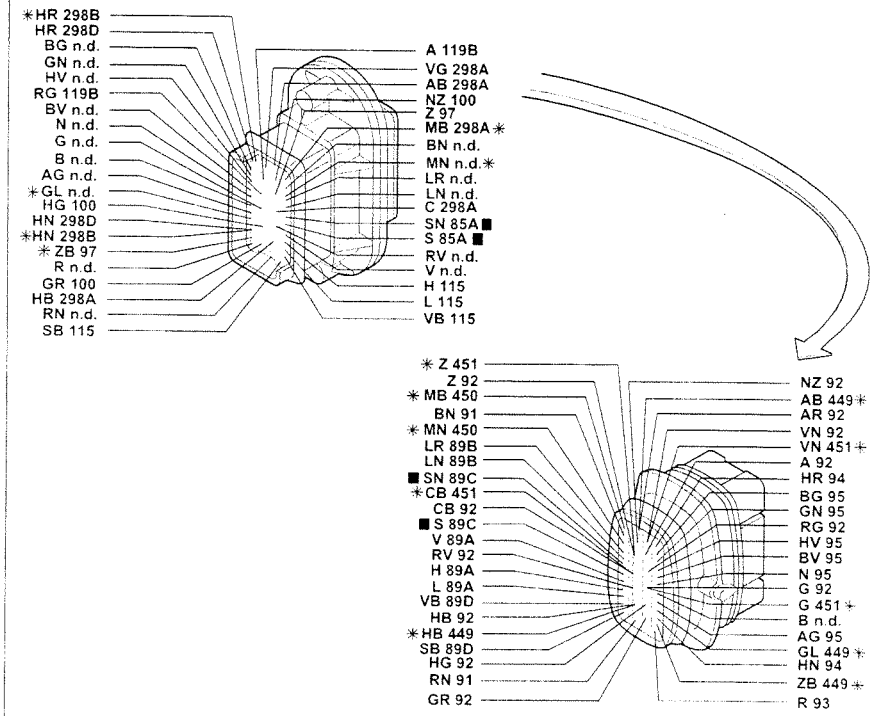

* Variant connection for COUPE' versions

75F Junction unit (dashboard)

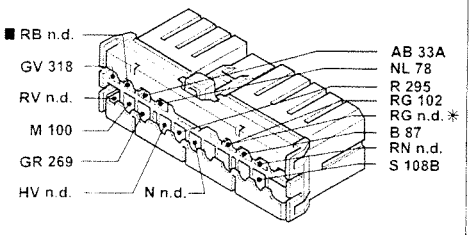

* Variant connection for 2959 versions with automatic transmission

75G Junction unit (dashboard)

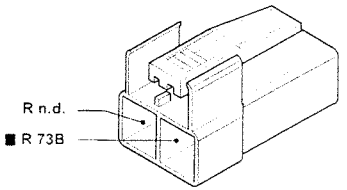

P3U0068I01

■ The cables in the wiring diagram are marked

Starting - Motronic M 2.7 electronic ignition and injection - Recharging and warning light - Insufficient engine oil pressure warning light - Injection system failure warning light - (See key at end of wiring diagrams)

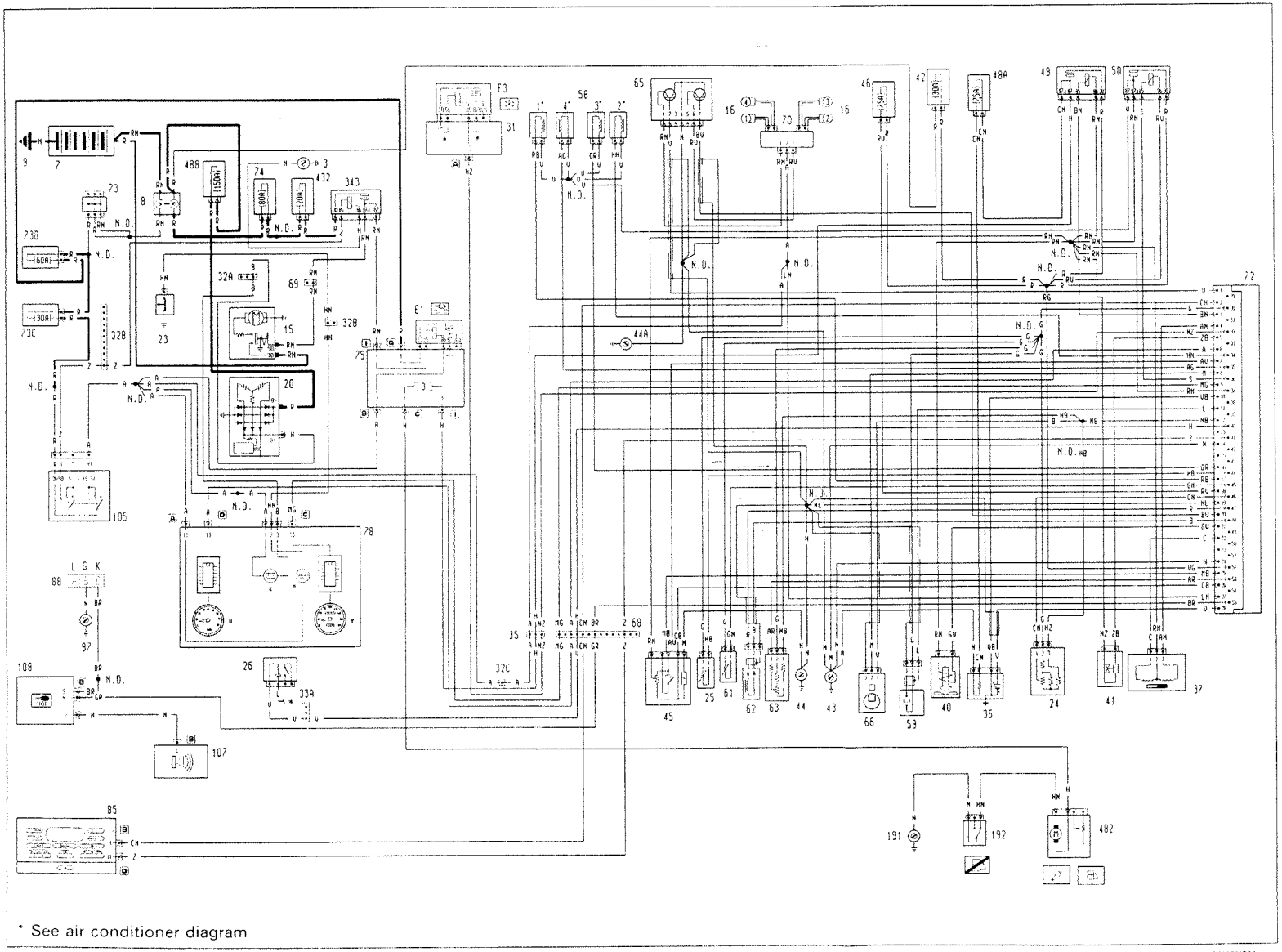

3U0691

Copyright by Fiat Auto

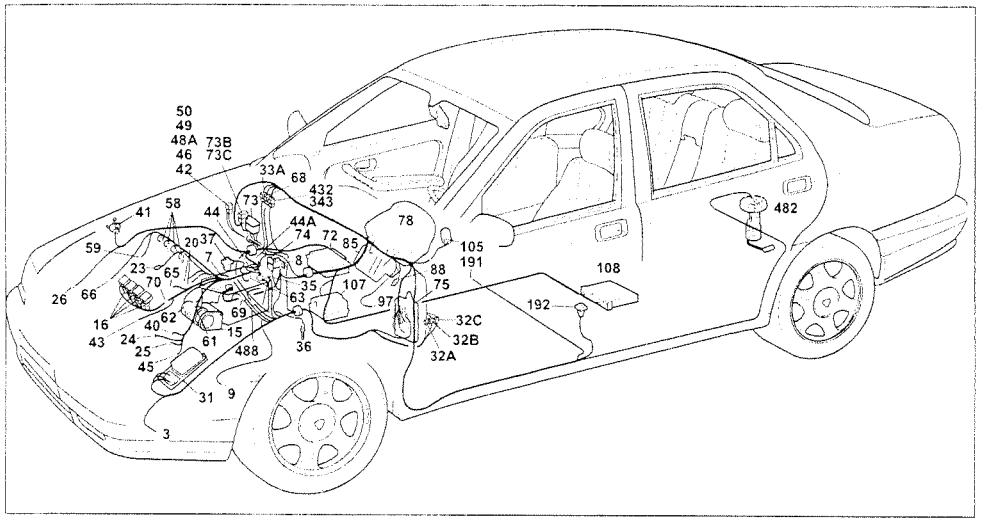

P3U071I01

1995 16v Turbo Version

Starting - Motronic 2.7 electronic ignition and injection - Recharging and warning light - Insufficient engine oil pressure warning light - Injection system failure warning light

Components key

3 Left front earth
7 Battery
8 Main connector block
9 Earth on bodyshell
15 Starter motor
16 Spark plugs
20 Alternator
23 Sensor signalling minimum engine oil pressure
24 Barometric capsule
25 Air temperature sensor
26 Three stage pressure switch
31 Peripheral control unit (engine compartment)
E3 Compressor coupling relay feed
32A Connection between dashboard and left engine compartment cables
32B Connection between dashboard and left engine compartment cables
32C Connection between dashboard and left engine compartment cables
33A Connection between dashboard and right engine compartment cables
35 Connection between engine compartment and electronic injection cables
36 Heated Lambda sensor
37 Idle adjustment actuator
40 E.G.R. solenoid valve
41 Petrol vapour cut out solenoid valve
42 30A fuse protecting electronic injection
43 Electronic earth
44 Power earth
44A Power earth
45 Air flow meter
46 7.5A fuse protecting electronic injection and LANCIA CODE control unit
48A 7.5A fuse protecting heated Lambda sensor
49 Electric fuel pump and heated Lambda sensor relay feed
50 Electronic injection system relay feed
58 Injectors
59 I. Detonation sensor
61 Electronic injection engine coolant temperature sensor
62 Rpm sensor
63 Potentiometer on butterfly valve
65 Power module
66 Timing sensor
67 Electronic injection cables connection
68 Connection between dashboard and electronic injection cables
69 Engine services cable connection
70 H.T. distributor
72 Fuel injection control unit
73 Secondary connector block
73B 60A protective fuse for I.G.E. control unit / junction unit
73C 30A fuse protecting ignition switch/alarm device
74 80A fuse protecting peripheral control unit (engine compartment)
75 Junction unit (dashboard)
E1 Ignition discharge relay
78 Instrument panel
K Battery recharging warning light
M Insufficient engine oil pressure warning light
U Electronic rev counter
Y Electronic tachometer
85 Infocenter control unit
88 Diagnostic socket
97 Earth on floor
105 Ignition switch
107 Alarm control unit
108 LANCIA CODE control unit
168 Electric fuel pump
191 Earth for inertia switch
192 Inertia switch
343 40A starter relay
432 20A protective fuse for ignition switch relay
482 Electric fuel pump / fuel gauge
488 150A maxi fuse

32A Connection between dashboard and left engine compartment cables

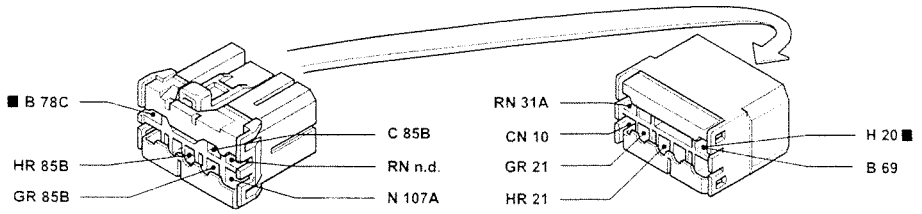

32B Connection between dashboard and left engine compartment cables

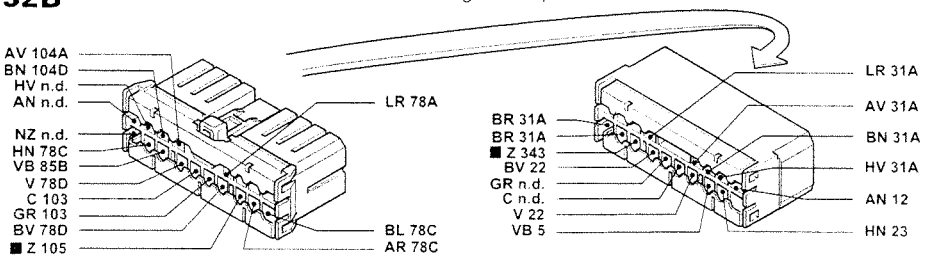

32C Connection between dashboard and left engine compartment cables

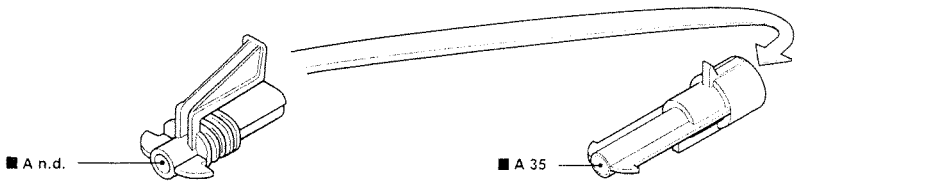

69 Engine services cable connection

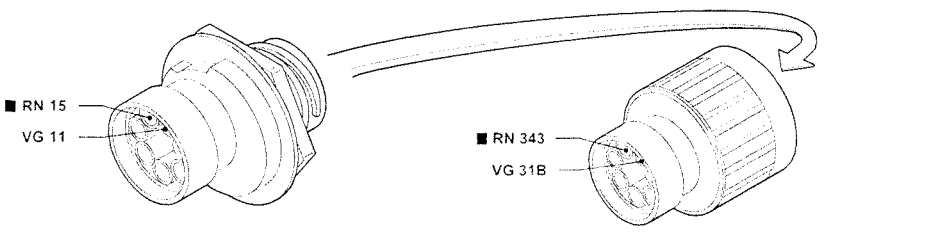

P3U072I01

■ The cables in the wiring diagram are marked

Starting - Motronic 2.10.3 electronic ignition and injection - Recharging and warning light - Insufficient engine oil pressure warning light - Injection system failure warning light - (See key at end of wiring diagrams)

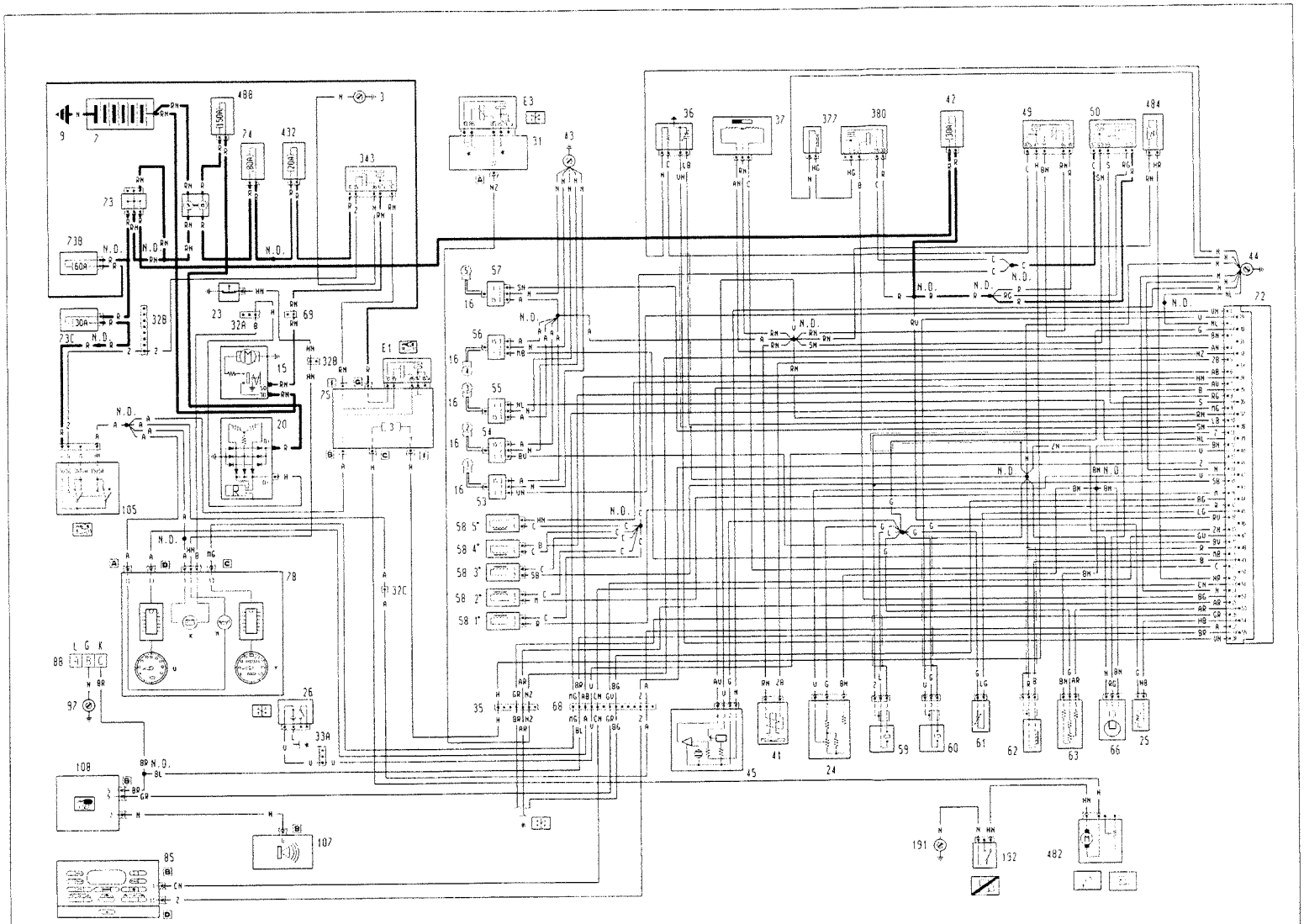

* See air conditioner diagram

P30Z21Z01

Copyright by Fiat Auto

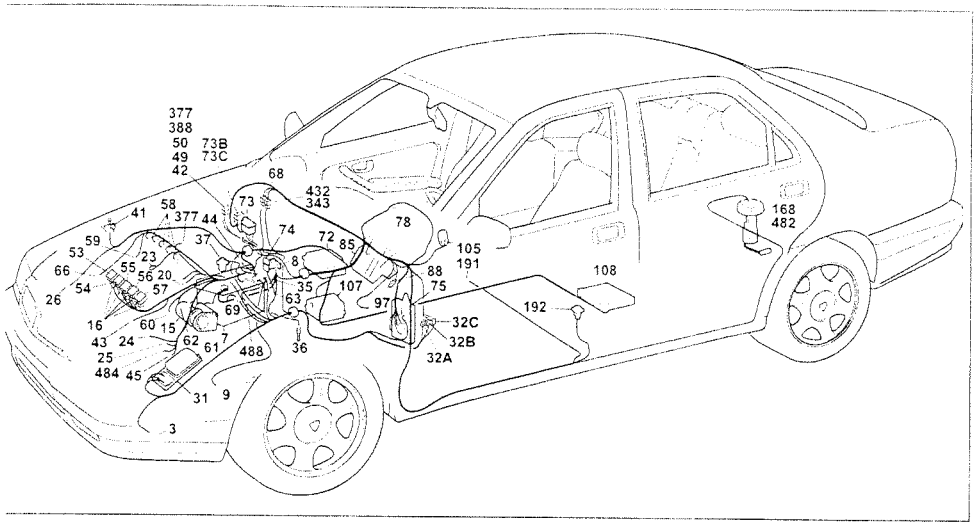

P3U075I01

1998 20v Turbo Version
Starting - Motronic 2.10.3 electronic injection and ignition - Recharging and warning light - Insufficient engine oil pressure warning light - Injection system failure warning light

Components key

3 Left front earth
7 Battery
8 Main connector block
9 Earth on bodyshell
15 Starter motor
16 Spark plugs
20 Alternator
23 Sensor signalling minimum engine oil pressure
24 Barometric capsule
25 Air temperature sensor
26 Three stage pressure switch
31 Peripheral control unit (engine compartment)
E3 Compressor coupling relay feed
2A Connection btwn dash. & left engine compartment cables
2B Connection btwn dash. & left engine compartment cables
2C Connection btw dash. & left engine compartment cables
3A Connection btwn dash. & right engine compartment cables
35 Connection btwn engine compartment & electronic injection cables
36 Heated Lambda sensor
37 Idle adjustment actuator
41 Petrol vapour cut out solenoid valve
42 30A fuse protecting electronic injection
43 Electronic earth
44 Power earth
45 Air flow meter
49 Electric fuel pump and heated Lambda sensor relay feed
50 Electronic injection system relay feed
53 Ignition coil
54 Ignition coil
55 Ignition coil
56 Ignition coil
57 Ignition coil
58 Injectors
59 1 Detonation sensor
60 2 Detonation sensor
61 Electronic injection engine coolant temperature sensor
62 Rpm sensor
63 Potentiometer on butterfly valve
66 Timing sensor
66 Connection between dashboard and electronic injection cables
69 Engine services cable connection
72 Fuel injection control unit
73 Secondary connector block
73B 60A protective fuse for I.G.E. control unit / junction unit
73C 30A fuse protecting ignition switch / alarm device
74 80A fuse protecting peripheral control unit (engine compartment)
75 Junction unit (dashboard)
E1 Ignition discharge relay
78 Instrument panel
K Battery recharging warning light
M Insufficient engine oil pressure warning light
U Electronic rev counter
Y Electronic tachometer
85 Infocenter control unit
88 Diagnostic socket
97 Earth on floor
105 Ignition switch
107 Alarm control unit
108 LANCIA CODE control unit
168 Electric fuel pump
191 Earth for inertia switch
192 Inertia switch
317 Connection between auto. trans. and electronic injection cable
343 40A starter relay
377 Phase transformer
380 Relay for phase transformer
432 20A protective fuse for ignition switch relay feed
482 Electric fuel pump / fuel gauge
484 Over-boost solenoid valve
488 150A maxi fuse

N.D. Ultrasound welding taped in cable loom

32A Connection between dashboard and left engine compartment cables

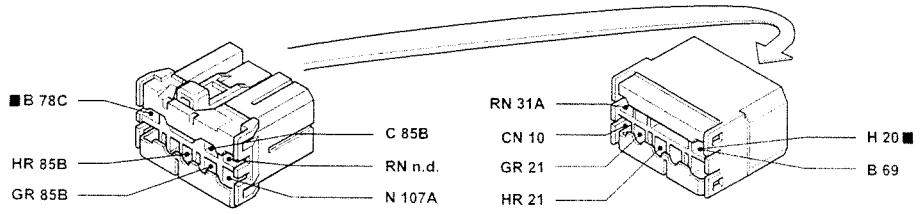

32B Connection between dashboard and left engine compartment cables

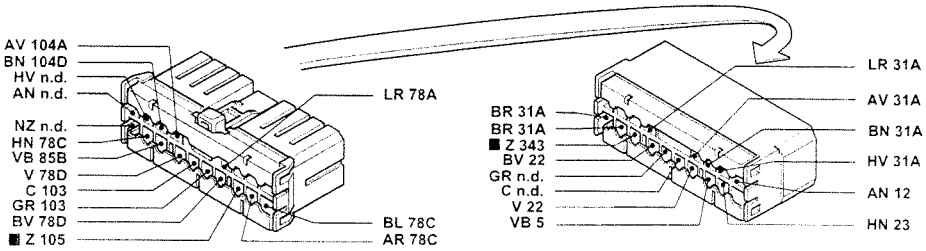

32C Connection between dashboard and left engine compartment cables

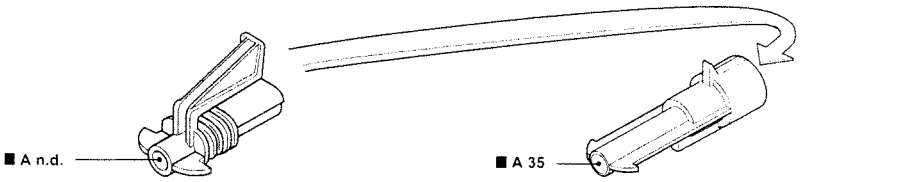

35 Connection between engine compartment and electronic injection cables

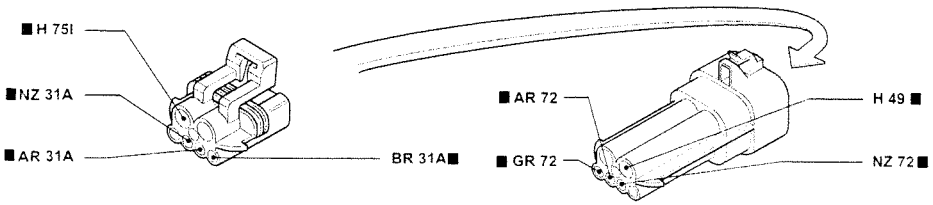

■ The cables in the wiring diagram are marked

P3U076I01

Starting - Motronic 2.10.3 electronic injection and ignition - Recharging and warning light - Insufficient engine oil pressure warning light - Injection system failure warning light - (See key at end of wiring diagrams)

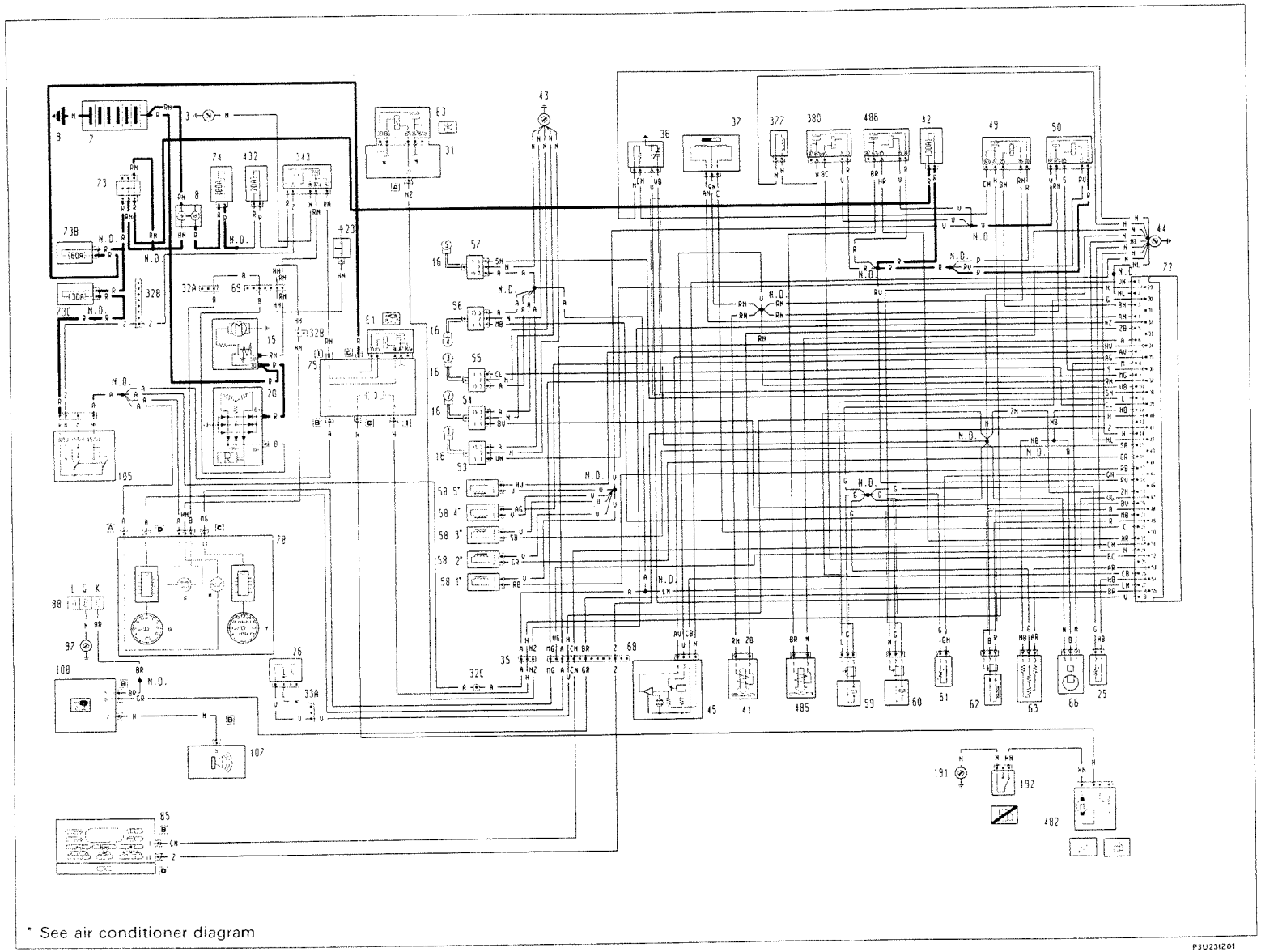

* See air conditioner diagram

P3U231Z01

3U0771

Copyright by Fiat Auto

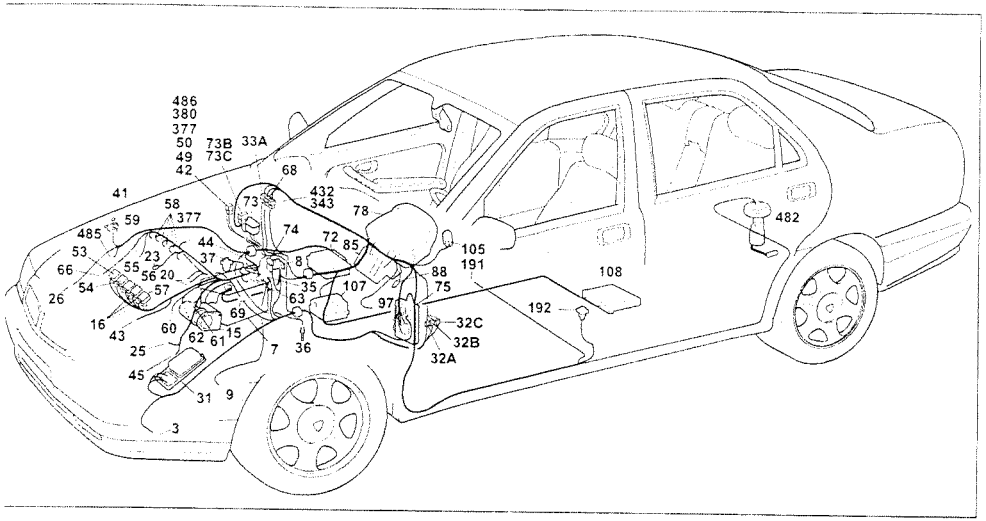

P3U079I01

1998/2446 Version

Starting - Motronic 2.10.3 electronic injection and ignition - Recharging and warning light - Insufficient engine oil pressure warning light - Injection system failure warning light

Components key

3 Left front earth
7 Battery
8 Main connector block
9 Earth on bodyshell
15 Starter motor
16 Spark plugs
20 Alternator
23 Sensor signalling minimum engine oil pressure
25 Air temperature sensor
26 Three stage pressure switch
31 Peripheral control unit (engine compartment)
E3 Compressor coupling relay feed
32A Connection between dash. & left engine compartment cables
32B Connection between dash. & left engine compartment cables
32C Connection between dash. & left engine compartment cables
33A Connection between dash. & right engine compartment cables
35 Connection btwn engine compartment & electronic injection cables
36 Heated Lambda sensor
37 Idle adjustment actuator
41 Petrol vapour cut out solenoid valve
42 30A fuse protecting electronic injection
43 Electronic earth
44 Power earth
45 Air flow meter
49 Relay for electric fuel pump and heated Lambda sensor
50 Electronic injection system relay feed
53 Ignition coil
54 Ignition coil
55 Ignition coil
56 Ignition coil
57 Ignition coil
58 Injectors
59 1 Detonation sensor
60 2 Detonation sensor
61 Electronic injection engine coolant temperature sensor
62 Rpm sensor
63 Potentiometer on butterfly valve
66 Timing sensor
68 Connection between dashboard and electronic injection cables
69 Engine services cable connection
72 Fuel injection control unit
73 Secondary connector block
73B 60A protective fuse for I.G.E. control unit / junction unit
73C 30A fuse protecting ignition switch / alarm device
74 80A fuse protecting peripheral control unit (engine compartment)
75 Junction unit (dashboard)
E1 Ignition discharge relay
78 Instrument panel
K Battery recharging warning light
M Insufficient engine oil pressure warning light
U Electronic rev counter
Y Electronic tachometer
85 Infocenter control unit
88 Diagnostic socket
97 Earth on floor
105 Ignition switch
107 Alarm control unit
108 LANCIA CODE control unit
168 Electric fuel pump
191 Earth for inertia switch
192 Inertia switch
343 40A starter relay
376 Modular manifold solenoid valve
377 Phase transformer
378 Modular manifold relay feed
380 Relay for phase transformer
386 Connection for cables to water in fuel filter sensor
432 20A protective fuse ignition switch relay feed

482 Electric fuel pump / fuel gauge
485 Modular manifold solenoid valve
486 Relay for modular manifold solenoid valve
N.D. Ultrasound welding taped in cable loom

32A Connection between dashboard and left engine compartment cables

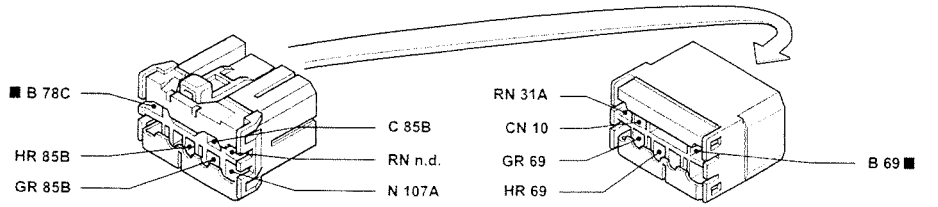

32B Connection between dashboard and left engine compartment cables

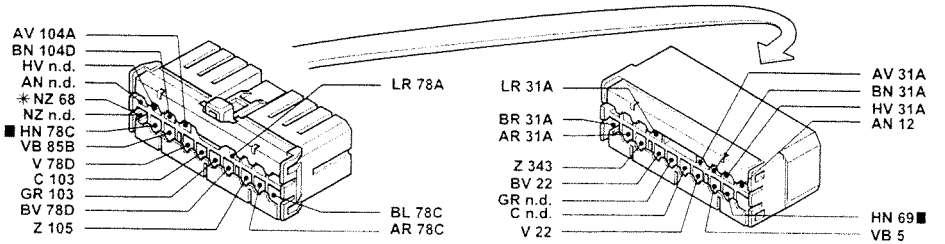

32C Connection between dashboard and left engine compartment cables

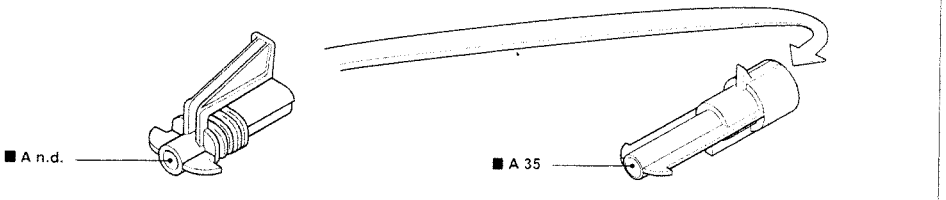

69 Engine services cable connection

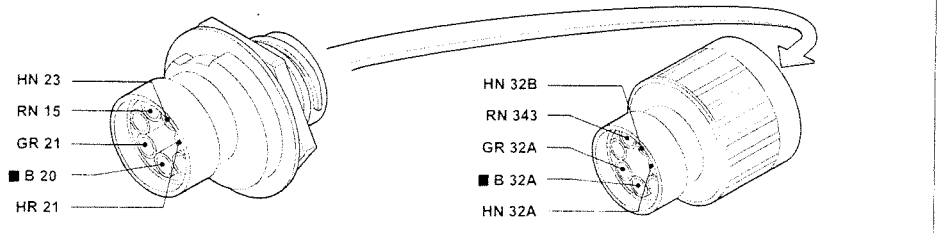

P3U080I01

■ The cables in the wiring diagram are marked

Version with automatic transmission

Starting - Motronic 2.10.3 electronic injection and ignition - Recharging and warning light - Insufficient engine oil pressure warning light - Injection system failure warning light - (See key at end of wiring diagrams)

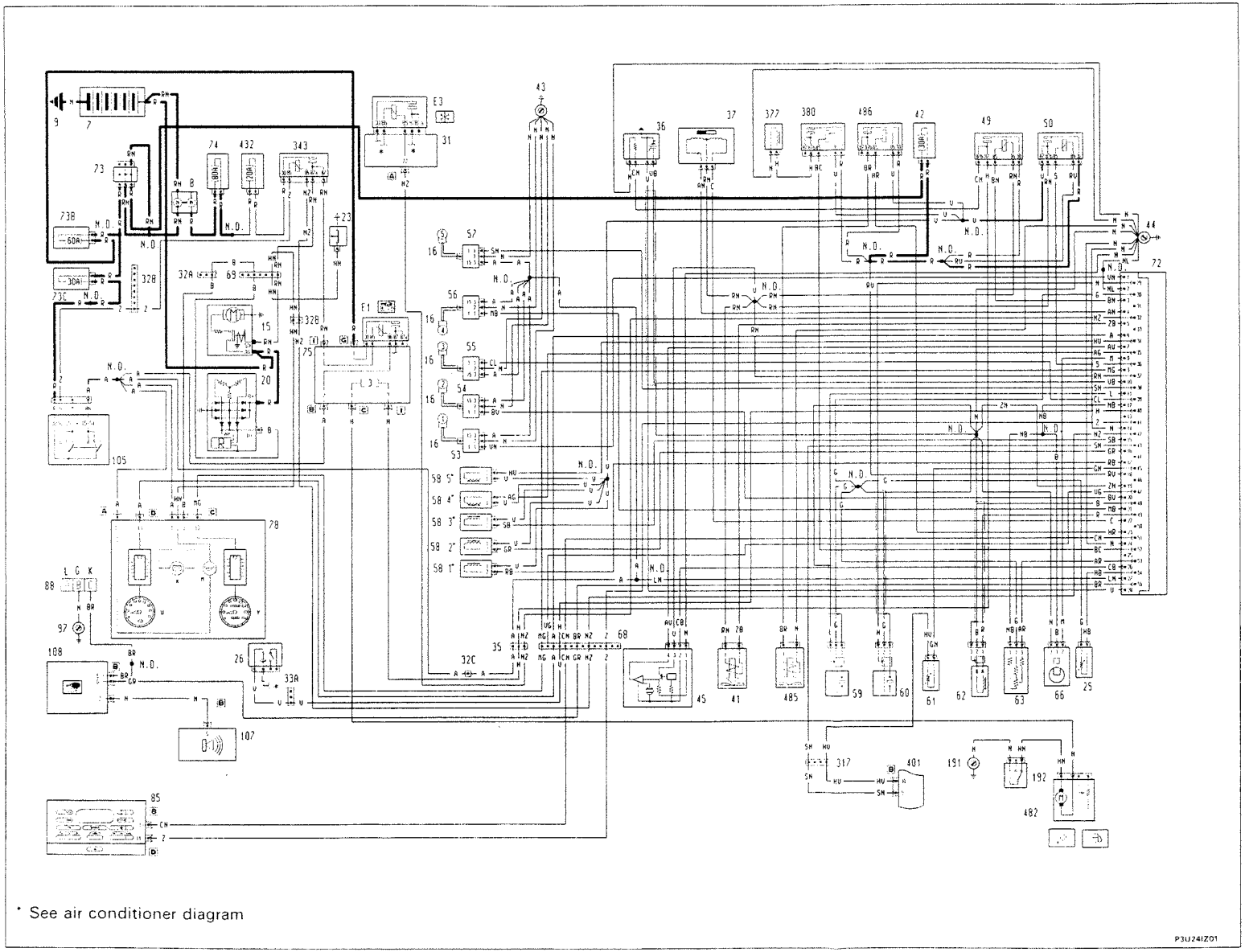

* See air conditioner diagram

P3U24IZ01

3U0811

Copyright by Fiat Auto

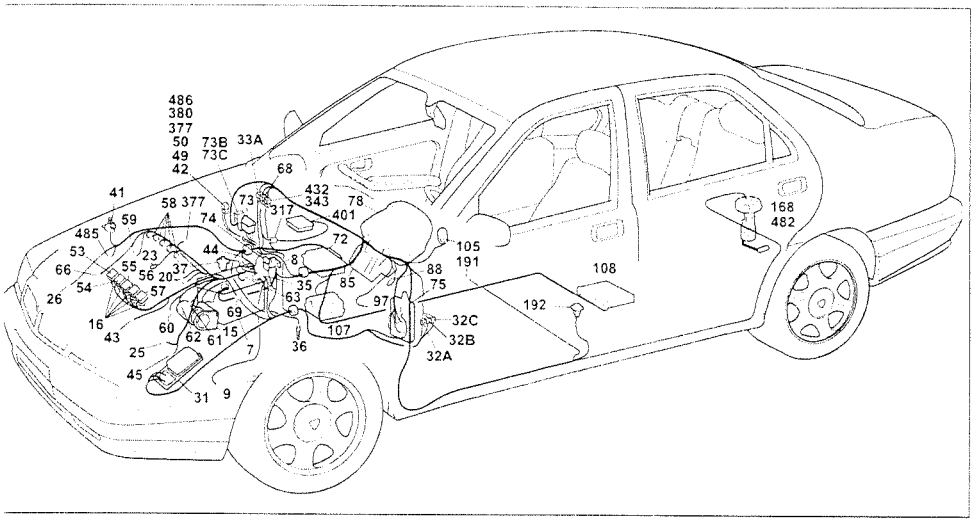

P3U083I01

1998/2446 Version with automatic transmission
Starting - Motronic 2.10.3 electronic injection and ignition - Recharging and warning light - Insufficient engine oil pressure warning light - Injection system failure warning light

Components key

7 Battery
8 Main connector block
9 Earth on bodyshell
15 Starter motor
16 Spark plugs
20 Alternator
23 Sensor signalling minimum engine oil pressure
25 Air temperature sensor
26 Three stage pressure switch
31 Peripheral control unit (engine compartment)
E3 Compressor coupling relay feed
32A Connection between dash. & left engine compartment cables
32B Connection between dash. & left engine compartment cables
32C Connection between dash. & left engine compartment cables
33A Connection between dash. & right engine compartment cables
35 Connection btwn engine compartment & electronic injection cables
36 Heated Lambda sensor
37 Idle adjustment actuator
41 Petrol vapour cut out solenoid valve
42 30A fuse protecting electronic injection
43 Electronic earth
44 Power earth
45 Air flow meter
49 Relay for electric fuel pump and heated Lambda sensor
50 Electronic injection system relay feed
53 Ignition coil
54 Ignition coil
55 Ignition coil
56 Ignition coil
57 Ignition coil
58 Injectors
59 1 Detonation sensor
60 2 Detonation sensor
61 Electronic injection engine coolant temperature sensor
62 Rpm sensor
63 Potentiometer on butterfly valve
66 Timing sensor
68 Connection between dashboard and electronic injection cables
69 Engine services cable connection
72 Fuel injection control unit
73 Secondary connector block
73B 60A protective fuse for I.G.E. control unit / junction unit
73C 30A fuse protecting ignition switch/alarm device
74 80A fuse protecting peripheral control unit (engine compartment)
75 Junction unit (dashboard)
E1 Ignition discharge relay
78 Instrument panel
K Battery recharging warning light
M Insufficient engine oil pressure warning light
U Electronic rev counter
Y Electronic tachometer
85 Infocenter control unit
88 Diagnostic socket
97 Earth on floor
105 Ignition switch
107 Alarm control unit
108 LANCIA-CODE control unit
168 Electric fuel pump
191 Earth for inertia switch
192 Inertia switch
317 Connection between automatic transmission and electronic injection cables
343 40A starter relay
376 Modular manifold solenoid valve
377 Phase transformer
378 Modular manifold relay feed
380 Relay for phase transformer
386 Connection for cables to water in fuel filter sensor
401 Electronic automatic transmission gear selector control unit (AISIN)
432 20A protective fuse for ignition switch relay feed
482 Electric fuel pump / fuel gauge
485 Modular manifold solenoid valve
486 Relay for modular manifold solenoid valve
N.D. Ultrasound welding taped in cable loom

32B Connection between dashboard and left engine compartment cables

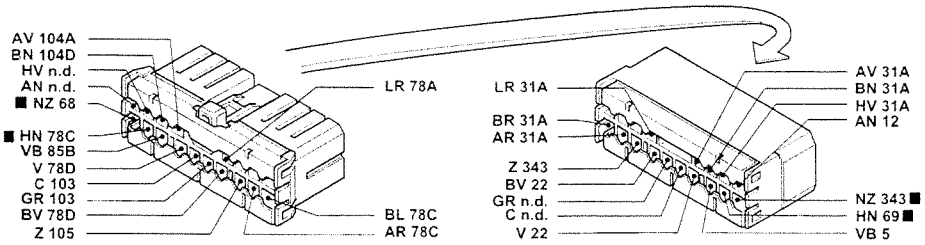

32C Connection between dashboard and left engine compartment cables

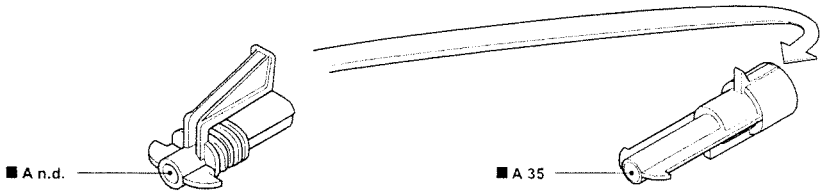

35 Connection between engine compartment and electronic injection cables

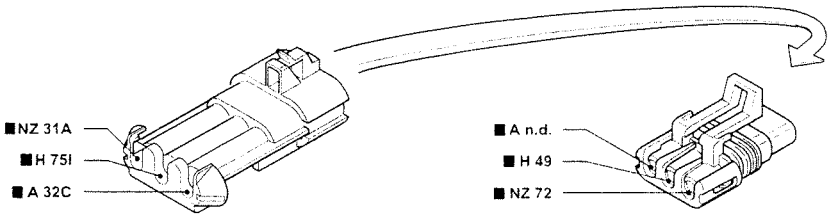

69 Engine services cable connection

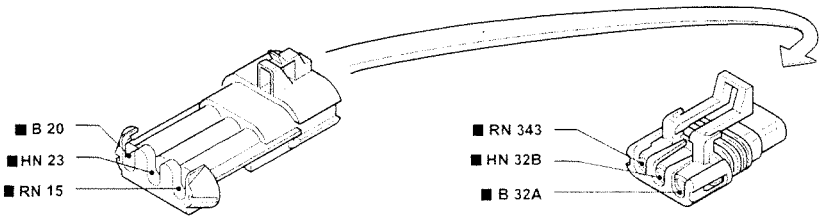

■ The cables in the wiring diagram are marked

P3U084I01

Electrical equipment

Wiring diagrams

55.

Starting - Motronic electronic ignition and injection - Recharging and warning light - Insufficient engine oil pressure warning light - Injection system failure warning light - (See key at end of wiring diagrams)

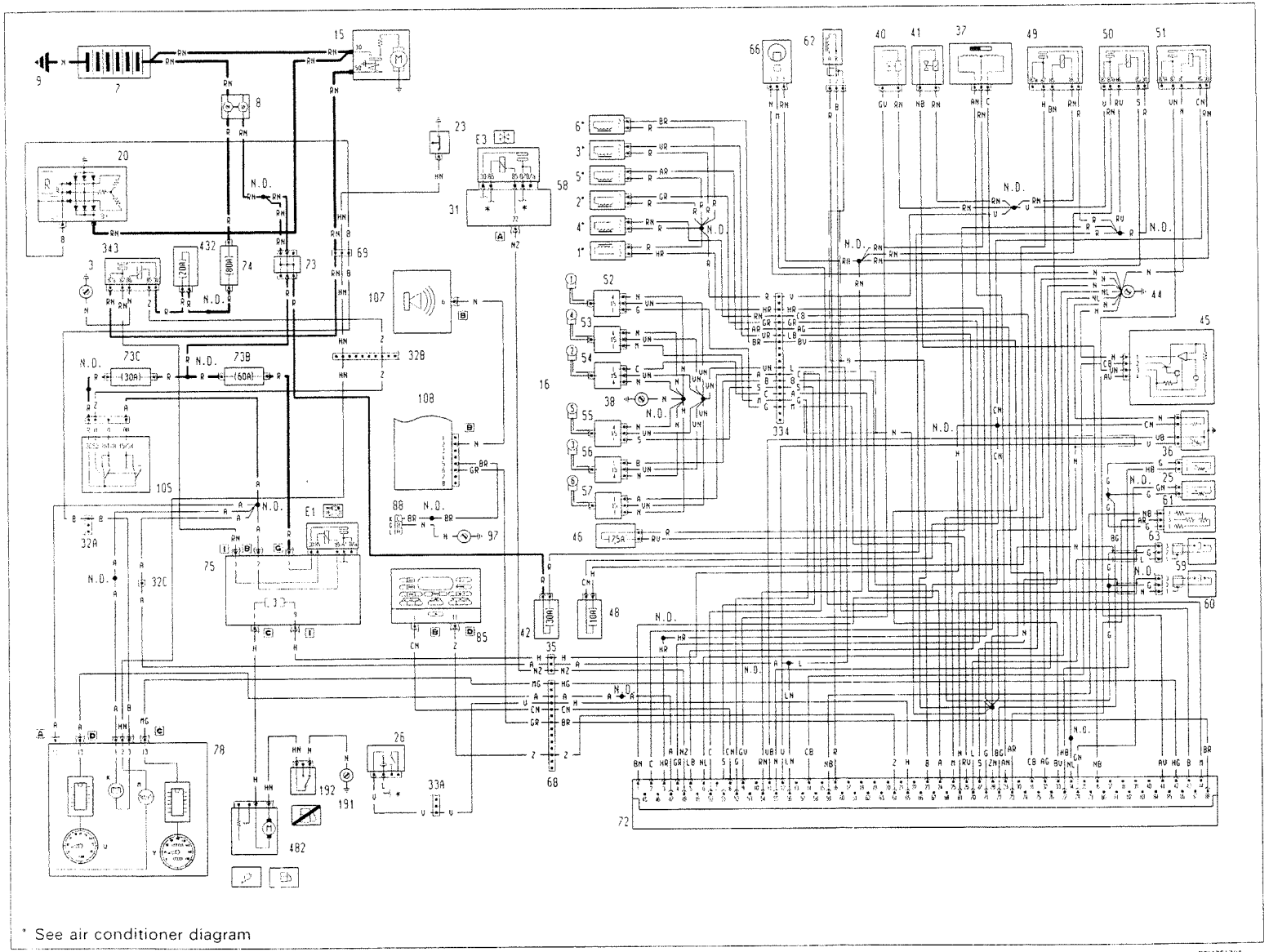

* See air conditioner diagram

P3U251Z01

3U0851

Copyright by Fiat Auto

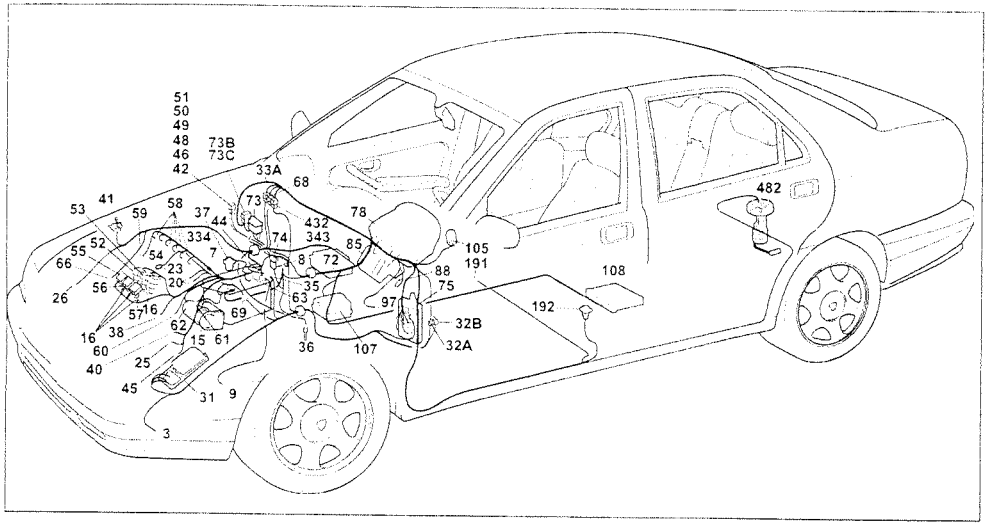

P3U087101

2959 V6 Version

Starting - Motronic electronic ignition and injection - Recharging and warning light - Insufficient engine oil pressure warning light - Injection system failure warning light

Components key

3 Left front earth
7 Battery
8 Main connector block
9 Earth on bodyshell
15 Starter motor
16 Spark plugs
20 Alternator
23 Sensor signalling minimum engine oil pressure
25 Air temperature sensor
26 Three stage pressure switch
31 Peripheral control unit (engine compartment)
E3 Compressor coupling relay feed
32A Connection between dashboard and left engine compartment cables
32B Connection between dash. & left engine compartment cables
32C Connection between dash. & left engine compartment cables
33A Connection between dash. & right engine compartment cables
35 Connection btwn engine compartment & electronic injection cables
36 Heated Lambda sensor
37 Idle adjustment actuator
38 Earth for electronic injection
40 E.G.R. solenoid valve
41 Petrol vapour cut out solenoid valve
42 30A fuse protecting electronic injection
44 Power earth
45 Air flow meter
46 7.5A fuse protecting electronic injection
48 10A fuse protecting heated Lambda sensor and air flow meter relay
49 Electric fuel pump and heated Lambda sensor relay feed
50 Electronic injection system relay feed
51 Air flow meter relay feed
52 Ignition coil
53 Ignition coil
54 Ignition coil
55 Ignition coil
56 Ignition coil
57 Ignition coil
58 Injectors
59 1st. Detonation sensor
60 2nd. Detonation sensor
61 Electronic injection engine coolant temperature sensor
62 Rpm sensor
63 Potentiometer on butterfly valve
66 Timing sensor
68 Connection between dashboard and electronic injection cables
69 Engine services cable connection
72 Fuel injection control unit
73 Secondary connector block
73B 60A protective fuse for I.G.E. control unit / junction unit
73C 30A fuse protecting ignition switch / alarm device
74 80A fuse protecting peripheral control unit (engine compartment)
75 Junction unit (dashboard)
E1 Ignition discharge relay
78 Instrument panel
K Battery recharging warning light
M Insufficient engine oil pressure warning light
U Electronic rev counter
Y Electronic tachometer
85 Infocenter control unit
88 Diagnostic socket
97 Earth on floor
105 Ignition switch
107 Alarm control unit
108 LANCIA-CODE control unit
119B Connection between dashboard and right longitudinal cables
168 Electric fuel pump
191 Earth for inertia switch
192 Inertia switch
334 Connection between electronic injection cable and injector bridge
343 40A starter relay
432 20A protective fuse for ignition switch relay feed
482 Electric fuel pump / fuel gauge
N.D. Ultrasound welding taped in cable loom

32B Connection between dashboard and left engine compartment cables

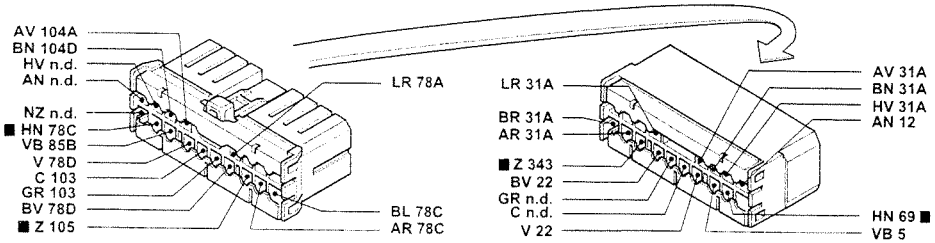

33A Connection between dashboard and right engine compartment cables

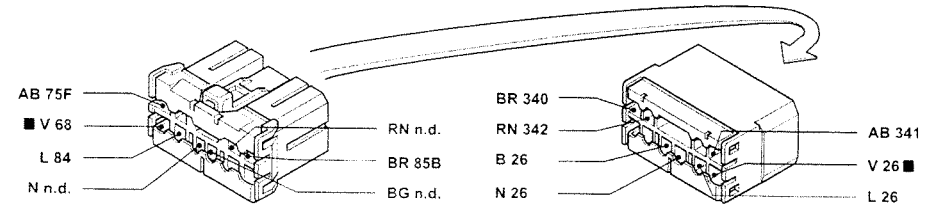

334 Connection between electronic injection cable and injector bridge

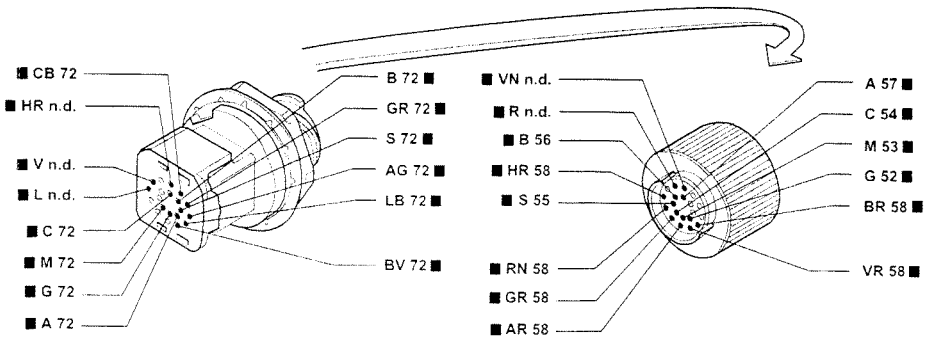

■ The cables in the wiring diagram are marked

P3U088101

Version with automatic transmission

Starting - Motronic electronic ignition and injection - Recharging and warning light - Insufficient engine oil pressure warning light - Injection system failure warning light - (See key at end of wiring diagrams)

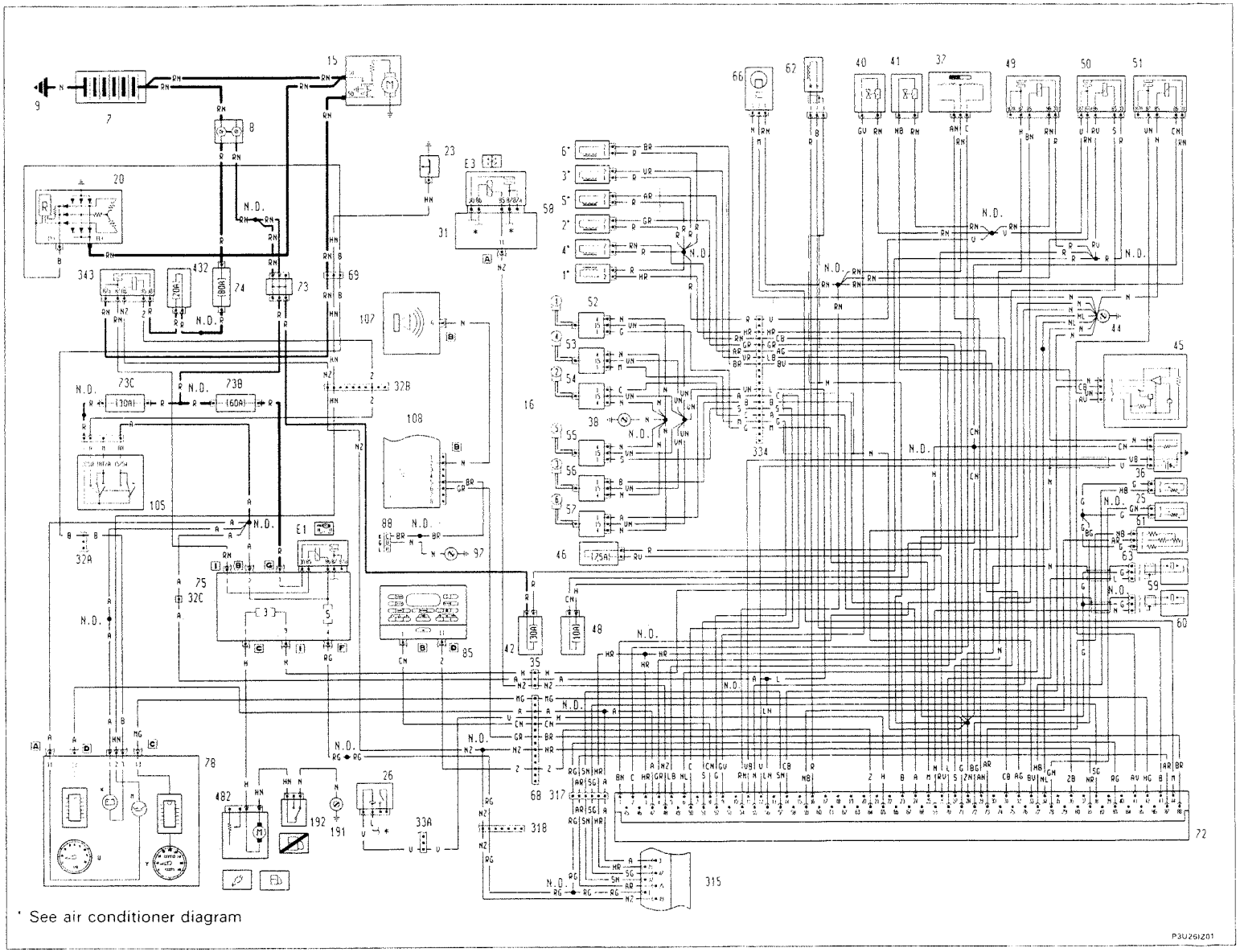

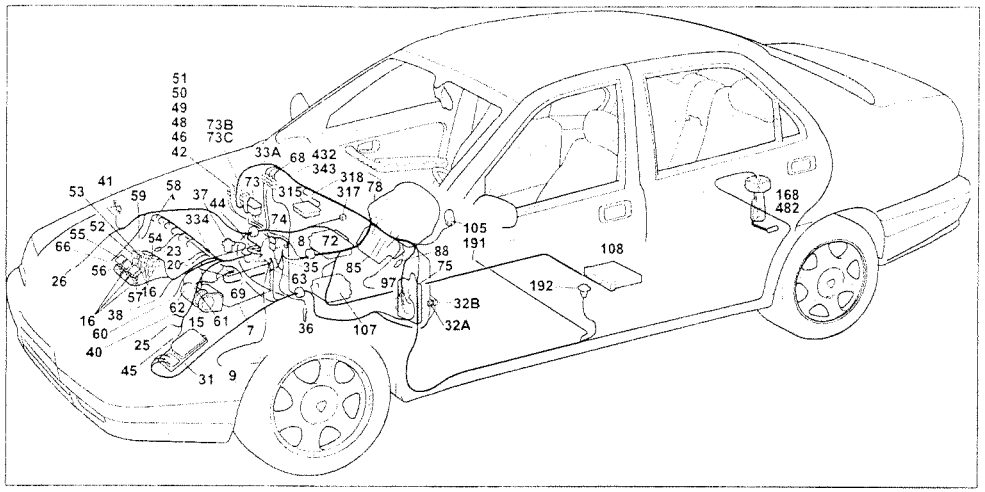

P3U091101

2959 V6 Version with automatic transmission

Starting - Motronic electronic ignition and injection - Recharging and warning light - Insufficient engine oil pressure warning light - Injection system failure warning light

Components key

7 Battery
8 Main connector block
9 Earth on bodyshell
15 Starter motor
16 Spark plugs
20 Alternator
23 Sensor signalling minimum engine oil pressure
25 Air temperature sensor
26 Three stage pressure switch
31 Peripheral control unit (engine compartment)
E3 Compressor coupling relay feed
32A Connection between dash. & left engine compartment cables
32B Connection between dash. & left engine compartment cables
32C Connection between dash. & left engine compartment cables
33A Connection between dash. & right engine compartment cables
35 Connection btwn engine compartment & electronic injection cables
36 Heated Lambda sensor
37 Idle adjustment actuator
38 Earth for electronic injection
40 E.G.R. solenoid valve
41 Petrol vapour cut out solenoid valve
42 30A fuse protecting electronic injection
44 Power earth
45 Air flow meter
46 7.5A fuse protecting electronic injection
48 10A fuse protecting heated Lambda sensor and air flow meter relay
49 Electric fuel pump and heated Lambda sensor relay feed
50 Electronic injection system relay feed
51 Air flow meter relay feed
52 Ignition coil
53 Ignition coil
54 Ignition coil
55 Ignition coil
56 Ignition coil
57 Ignition coil
58 Injectors
59 1st. Detonation sensor
60 2nd. Detonation sensor
61 Electronic injection engine coolant temperature sensor
62 Rpm sensor
63 Potentiometer on butterfly valve
66 Timing sensor
68 Connection between dashboard and electronic injection cables
69 Engine services cable connection
72 Fuel injection control unit
73 Secondary connector block
73B 60A protective fuse for I.G.E. control unit / junction unit
73C 30A fuse protecting ignition switch / alarm device
74 80A fuse protecting peripheral control unit (engine compartment)
75 Junction unit (dashboard)
E1 Ignition discharge relay
78 Instrument panel
K Battery recharging warning light
M Insufficient engine oil pressure warning light
U Electronic rev counter
Y Electronic tachometer
85 Infocenter control unit
88 Diagnostic socket
97 Earth on floor
105 Ignition switch
107 Alarm control unit
108 LANCIA-CODE control unit
119B Connection between dashboard and right longitudinal cables
168 Electric fuel pump
191 Earth for inertia switch
192 Inertia switch
315 Electronic automatic transmission gear selector control unit (ZF)
317 Connection between automatic transmission and electronic injection cables
318 Connection between electronic auto. trans. and dashboard cables
334 Connection between electronic injection cable and injector bridge
343 40A starter relay
432 20A protective fuse ignition switch relay feed
482 Electric fuel pump / fuel gauge

N.D. Ultrasound welding taped in cable loom

69 Engine services cable connection

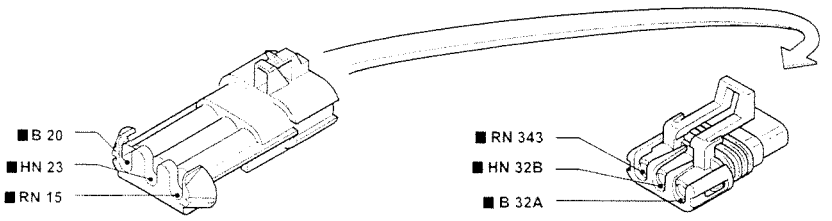

317 Connection between electronic auto. trans. and electronic injecction cables

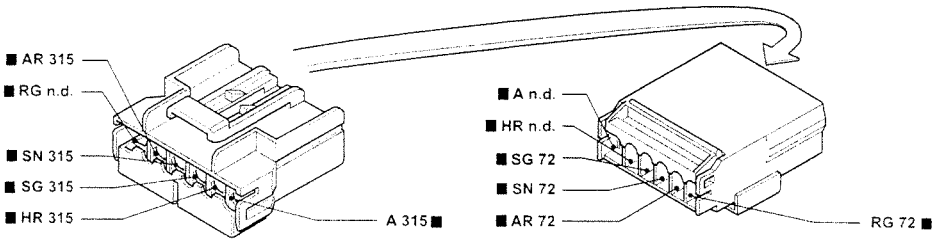

318 Connection between electronic automatic transmission and dashboard cables

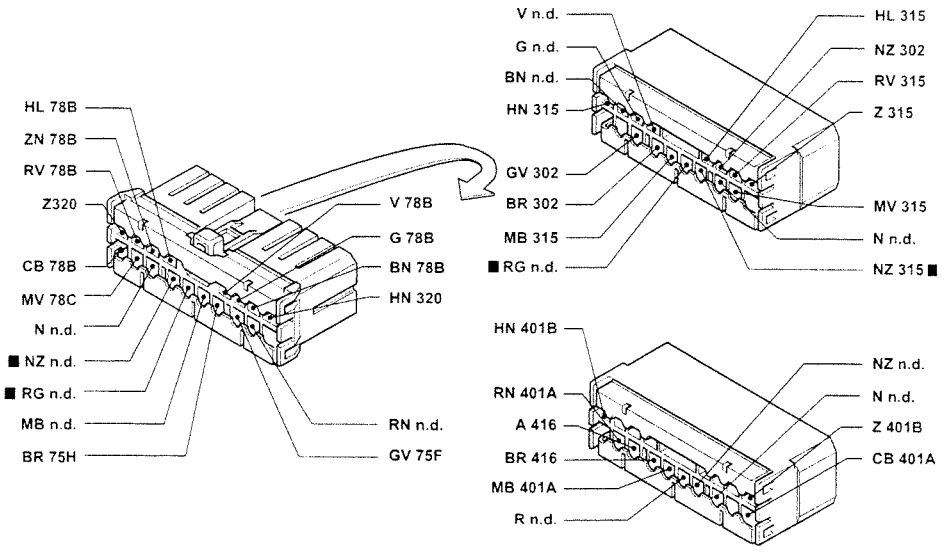

P3U092101

■ The cables in the wiring diagram are marked

Starting - **MSA11-310 fuel pump electronic control unit - Recharging and warning light - Insufficient engine oil pressure warning light - Injection system failure warning light - Heater plugs control unit and warning light - (See key at end of wiring diagrams)**

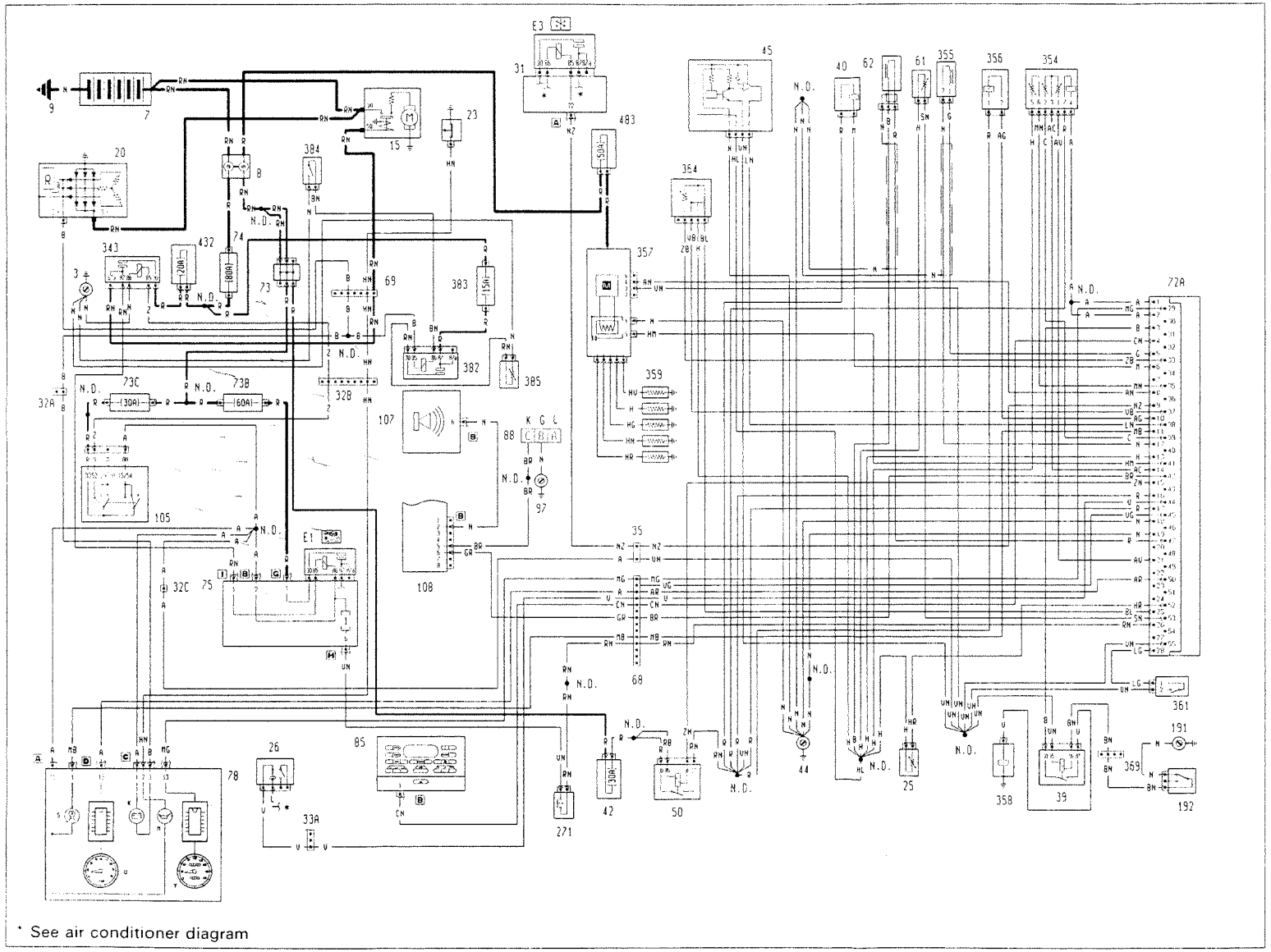

* See air conditioner diagram

P3U271Z01

3U0931

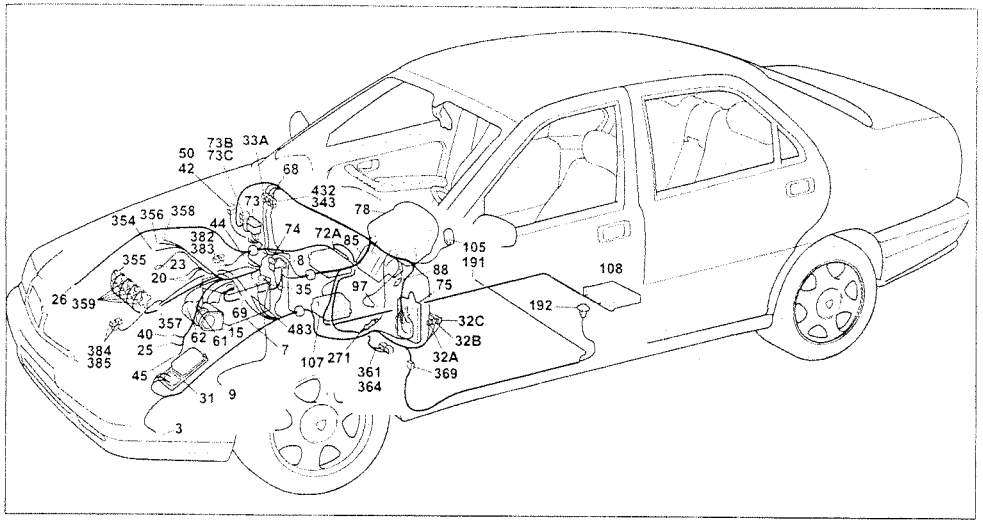

P3U095I01

2387 TD Version
Starting - MSA11-310 fuel pump electronic control unit - Recharging and warning light - Insufficient engine oil pressure warning light - Injection system failure warning light - Heater plugs warning light

Components key

3 Left front earth
7 Battery
8 Main connector block
9 Earth on bodyshell
15 Starter motor
20 Alternator
23 Switch signalling minimum engine oil pressure
25 Air temperature sensor
26 Three stage pressure switch
31 Peripheral control unit (engine compartment)
E3 Compressor coupling relay feed
32A Connection between dash. & left engine compartment cables
32B Connection between dash. & left engine compartment cables
32C Connection between dash. & left engine compartment cables
33A Connection between dash. & right engine compartment cables
35 Connection btwn engine compartment & electronic injection cables
39 Relay for inertia switch
40 E.G.R. solenoid valve
42 30A fuse protecting electronic injector
44 Power earth
45 Air flow meter
50 Electronic injection system relay feed
61 Electronic injection engine coolant temperature sensor
62 Rpm sensor
64 40A fuse protecting heater plugs
68 Connection between dashboard and electronic injection cables
69 Engine services cable connection
72A Fuel pump control unit
73 Secondary connector block
73B 60A protective fuse for I.G.E. control unit / junction unit
73C 30A fuse protecting ignition switch / alarm device
74 80A fuse protecting peripheral control unit (engine compartment)
75 Junction unit (dashboard)
E1 Ignition discharge relay
78 Instrument panel
K Battery recharging warning light
M Insufficient engine oil pressure warning light
S Heater plugs warning light
U Electronic rev counter
Y Electronic tachometer
85 Infocenter control unit
88 Diagnostic socket
97 Earth on floor
105 Ignition switch
107 Alarm control unit
108 LANCIA-CODE control unit
191 Earth for inertia switch
192 Inertia switch
271 Brake lights switch
343 40A starter relay
354 Electric diesel pump
355 Instrument injector
356 Solenoid valve on diesel pump
357 Heater plugs control unit
358 Engine cut out solenoid on injection pump
359 Heater plugs
361 Switch on clutch pedal
364 Potentiometer on accelerator pedal
369 Connection between electronic injection and left longitudinal cables
382 Heated diesel filter relay feed (P.T.C.)
383 15A fuse protecting heated diesel filter (P.T.C.)
384 Heated diesel filter thermal contact (P.T.C.)
385 Heated diesel filter resitance (P.T.C.)
386 Connection for cables to water in fuel filter sensor
432 20A protective fuse for ignition switch relay feed
483 50A fuse protecting heater plugs control unit
N.D. Ultrasound welding taped in cable loom

32C Connection between dashboard and left engine compartment cables

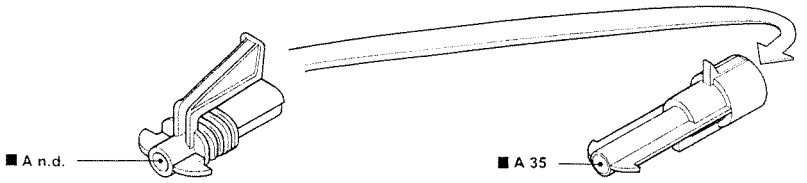

33A Connection between dashboard and right engine compartment cables

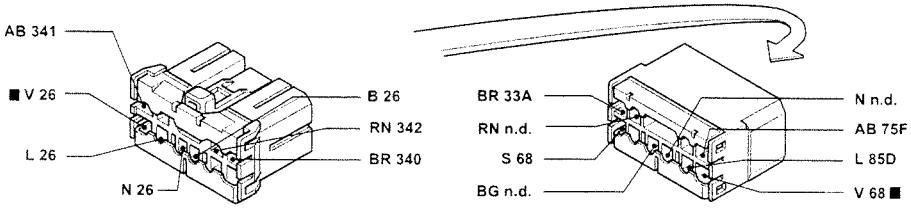

35 Connection between engine compartment and electronic injection cables

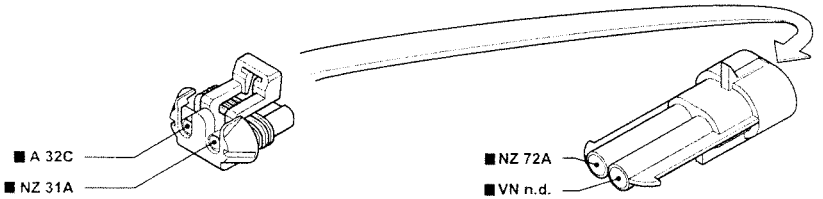

69 Engine services cable connection

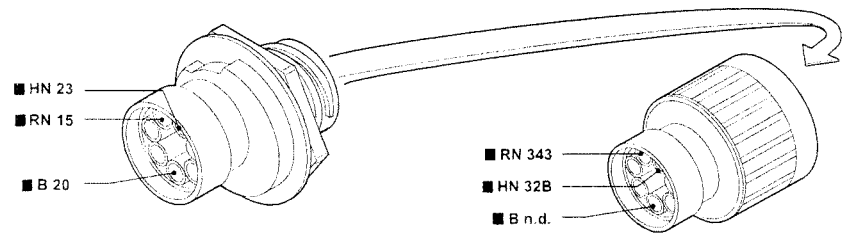

■ The cables in the wiring diagram are marked

P3U096I01

Starting - Diesel injection pressure pump electronic control unit - Recharging and warning light - Insufficient engine oil pressure warning light - Injection system failure warning light - Heater plugs control unit and warning light - (See key at end of wiring diagrams)

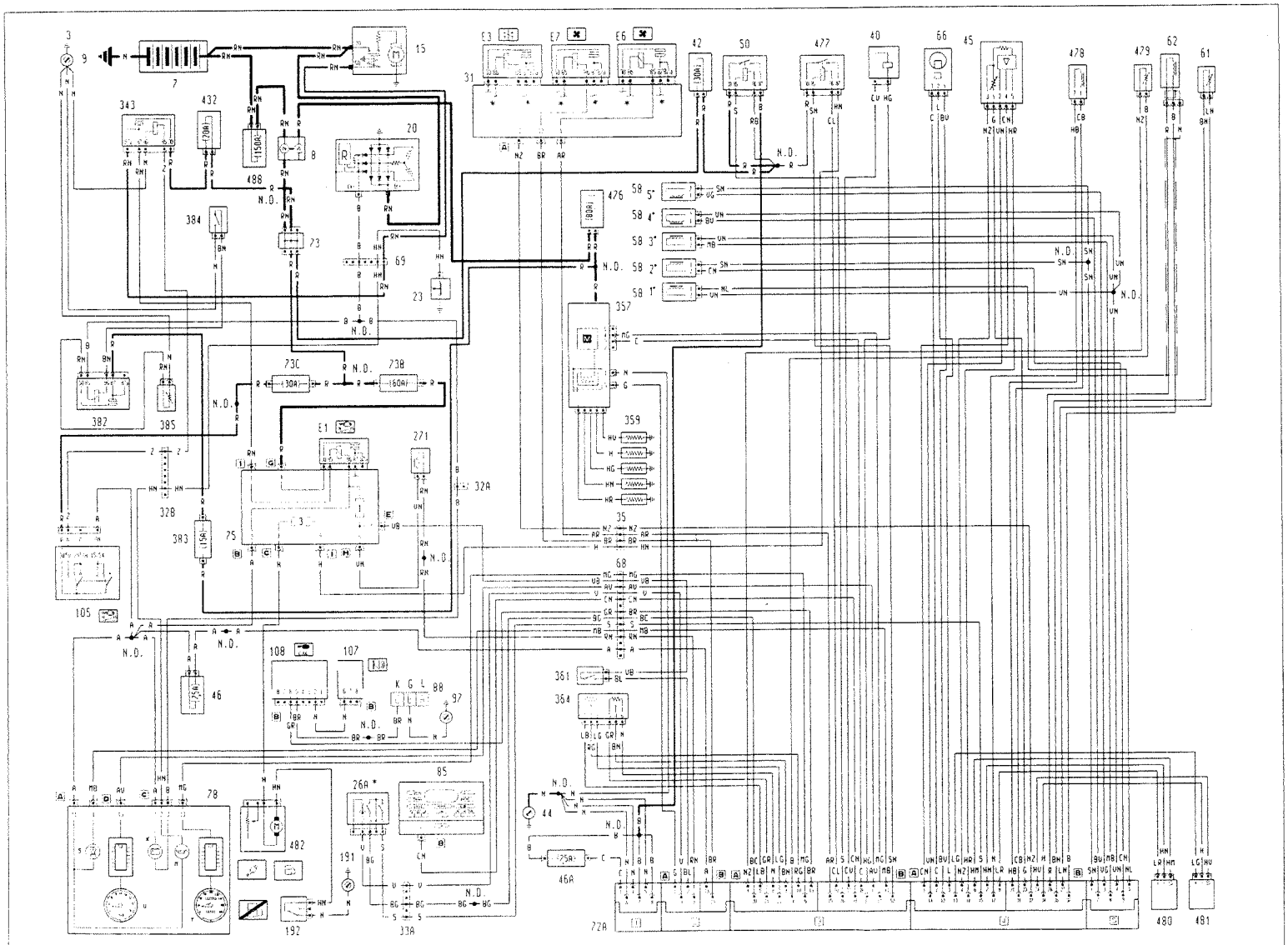

* See air conditioner diagram

P3U281Z01

Copyright by Fiat Auto

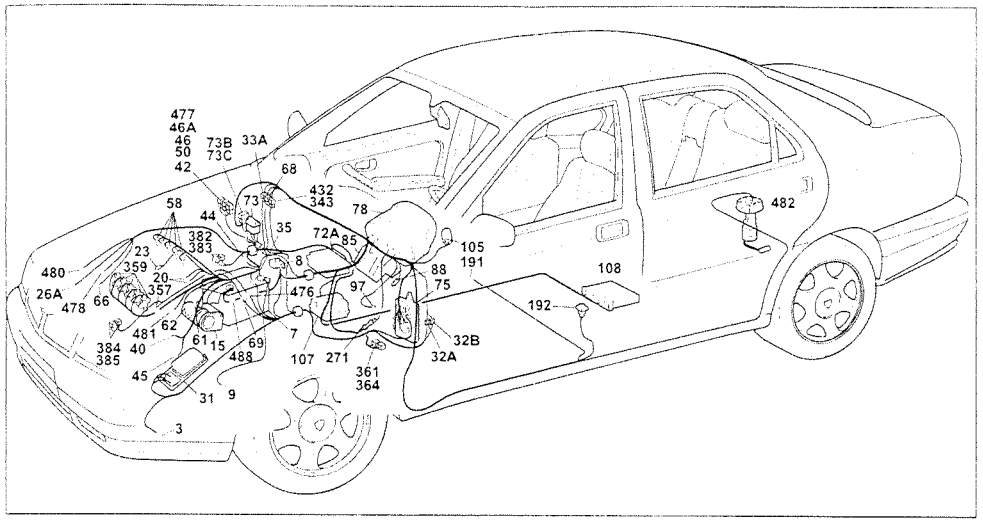

P3U099I01

2387 JTD Version
Starting - Diesel injection pressure pump electronic control unit - Recharging and warning light - Insufficient engine oil pressure warning light - Injection system failure warning light - Heater plugs control unit and warning light

Components key

3 Left front earth
7 Battery
8 Main connector block
9 Earth on bodyshell
15 Starter motor
20 Alternator
23 Switch signalling minimum engine oil pressure
26A Four stage pressure switch
31 Peripheral control unit (engine compartment)
E3 Compressor coupling relay feed
E6 Engine cooling fan high speed relay feed
E7 Engine cooling fan low speed relay feed
32A Connection between dash. & left engine compartment cables
32B Connection between dash. & left engine compartment cables
33A Connection between dash. & right engine compartment cables
35 Connection btwn engine compartment & electronic injection cables
40 E.G.R. solenoid valve
42 30A fuse protecting electronic injection
44 Power earth
45 Air flow meter
46A 7.5A fuse protecting electronic injection
50 Electronic injection system relay feed
58 Injectors
61 Electronic injection engine coolant temperature sensor
62 Rpm sensor
66 Timing sensor
68 Connection between dashboard and electronic injection cables
69 Engine services cable connection
72A Fuel pump control unit
73 Secondary connector block
73B 60A protective fuse for I.G.E. control unit / junction unit
73C 30A fuse protecting ignition switch / alarm device
75 Junction unit (dashboard)
E1 Ignition discharge relay
78 Instrument panel
K Battery recharging warning light
M Insufficient engine oil pressure warning light
S Heater plugs warning light
U Electronic rev counter
Y Electronic tachometer
85 Infocenter control unit
88 Diagnostic socket
97 Earth on floor
105 Ignition switch
107 Alarm control unit
108 LANCIA-CODE control unit
191 Earth for inertia switch
192 Inertia switch
271 Brake lights switch
343 40A starter relay
357 Heater plugs control unit
359 Heater plugs
361 Switch on clutch pedal
364 Potentiometer on accelerator pedal
382 Heated diesel filter relay feed (P.T.C.)
383 15A fuse protecting heated diesel filter (P.T.C.)
384 Heated diesel filter thermal contact (P.T.C.)
385 Heated diesel filter resistance (P.T.C.)
432 20A protective fuse ignition switch relay feed
476 80A fuse protecting heater plugs control unit
477 Electric fuel pump relay
478 Fuel pressure regulator
479 Fuel temperature sensor
480 Turbo pressure regulator
481 Fuel pressure sensor
482 Electric fuel pump / fuel gauge
488 150A maxi fuse
N.D. Ultrasound welding taped in cable loom

32B Connection between dashboard and left engine compartment cables

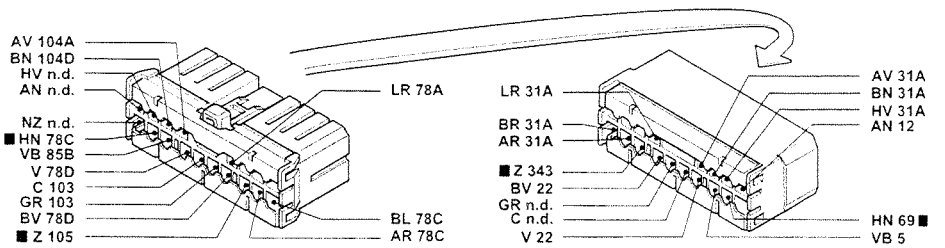

33A Connection between dashboard and right engine compartment cables (Only for Turbo Diesel versions)

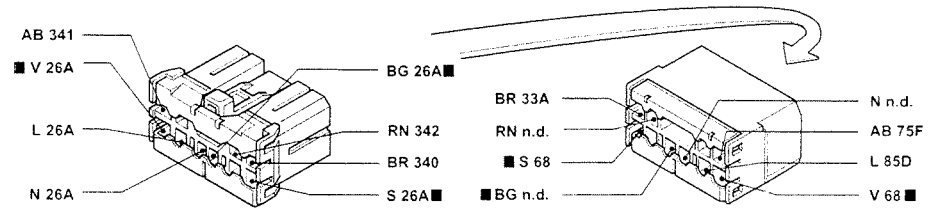

35 Connection between engine compartment and electronic injection cables

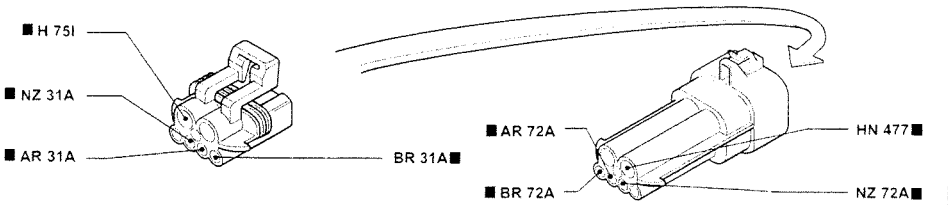

69 Engine services cable connection

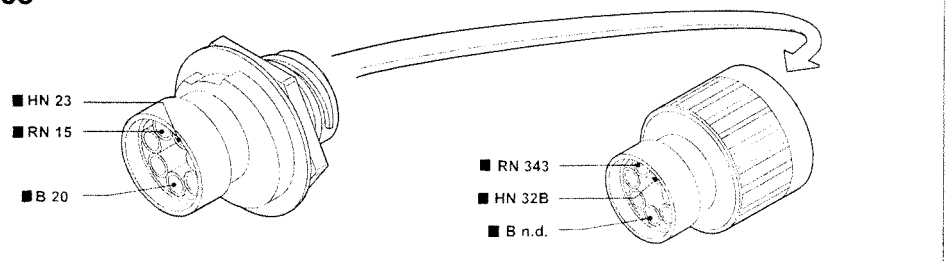

P3U100I01

■ The cables in the wiring diagram are marked

Side lights and warning light - Dipped headlamps and warning light - Main beam headlamps and warning light - Parking lights - Headlamp flasher - Number plate lights - (See key at end of wiring diagrams)

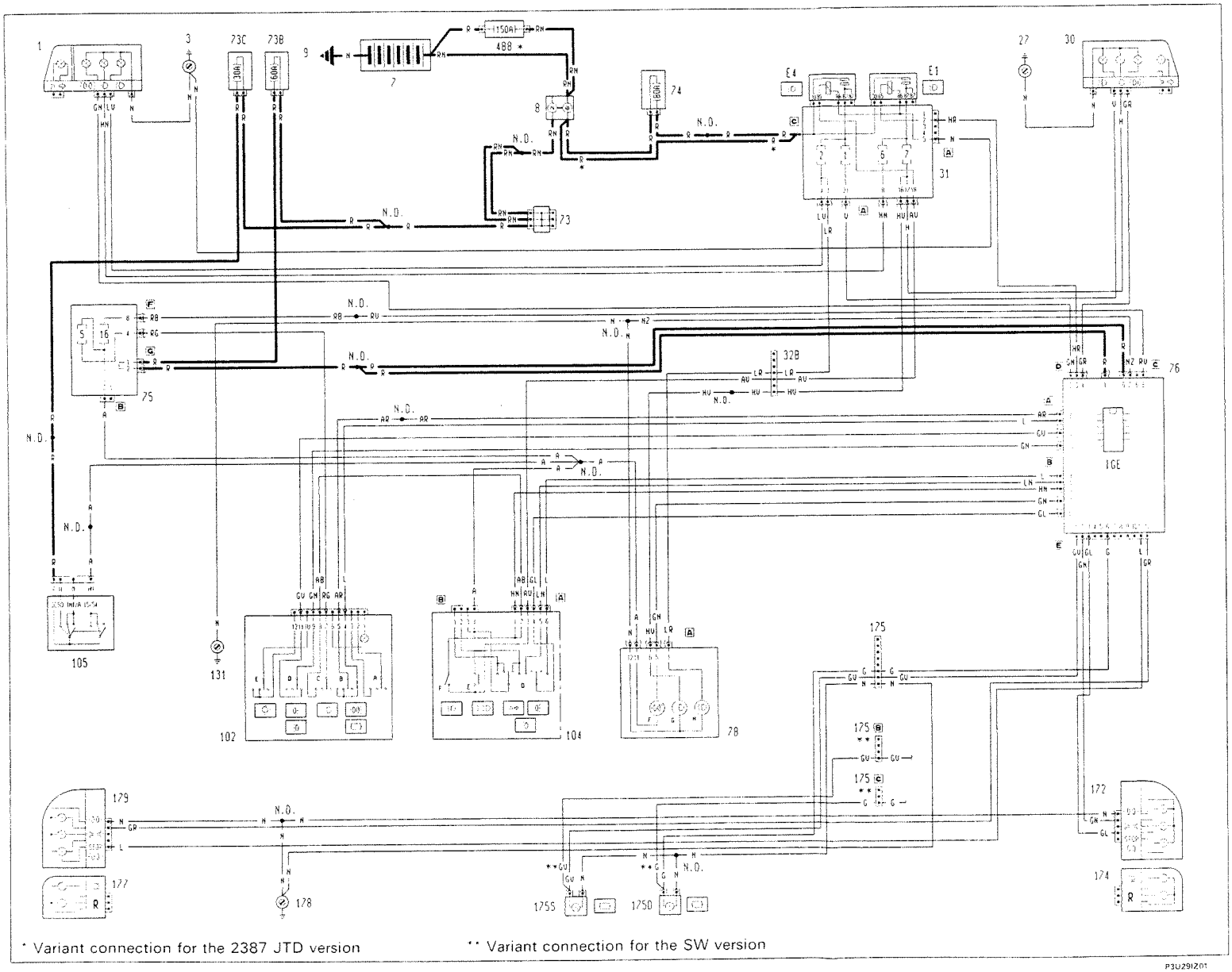

P3U29IZ01

3U1011

Copyright by Fiat Auto

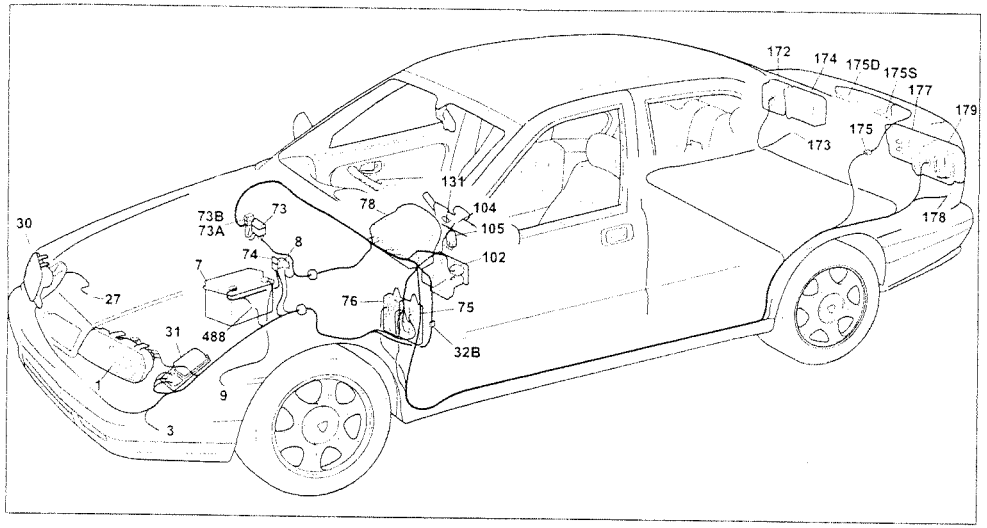

P3U103I01

Side lights and warning light - Dipped headlamps and warning light - Main beam headlamps and warning light - Parking lights - Headlamp flasher - Number plate lights

Components key

1 Left front light cluster
3 Left front earth
7 Battery
8 Main connector block
9 Earth on bodyshell
27 Right front earth
30 Right front light cluster
31 Peripheral control unit (engine compartment)
E1 Dipped headlamps relay feed
E4 Main beam headlamps relay feed
32B Connection between dash. & left engine compartment cables
73 Secondary connector block
73B 60A protective fuse for I.G.E. control unit / junction unit
73C 30A fuse protecting ignition switch / alarm device

74 80A fuse protecting peripheral control unit (engine compartment)
75 Junction unit (dashboard)
76 I.G.E. control unit
78 Instrument panel
F Side lights warning light
G Dipped headlamps warning light
H Main beam headlamps warning light
102 Exterior lights control unit
B Switch for side lights / number plate lights
C Switch for dipped beam headlamps / main beam headlamps
D Parking lights control switch
E Ideogram light control switch

104 Steering column switch unit
D Switch for direction indicators / parking lights
E Main beam headlamps flasher button
F Main beam headlamps control switch
105 Ignition switch
131 Earth on steering column support
172 Right rear light cluster on fixed section
174 Right rear light cluster on moveable section
175 Connection between left longitudinal and tailgate cables
175S Left no. plate light
175D Right no. plate light
177 Left rear light cluster on moveable section
178 Left rear earth
179 Left rear light cluster on fixed section
488 150A maxi fuse

N.D. Ultrasound welding taped in cable loom

32B Connection between dashboard and left engine compartment cables

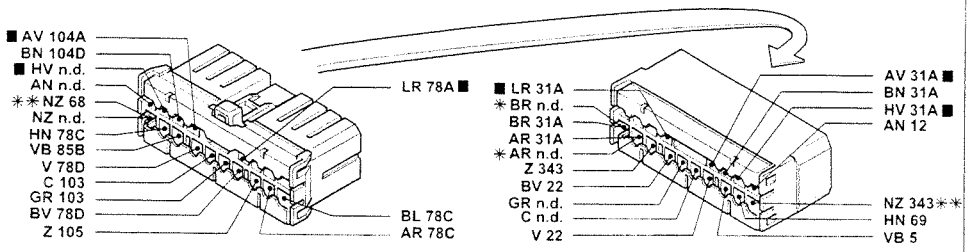

* Variant connection for Turbo Diesel versions
** Variant connection for 1998/2446/2959 versions with automatic transmission

175 Connection between left longitudinal and tailgate cables

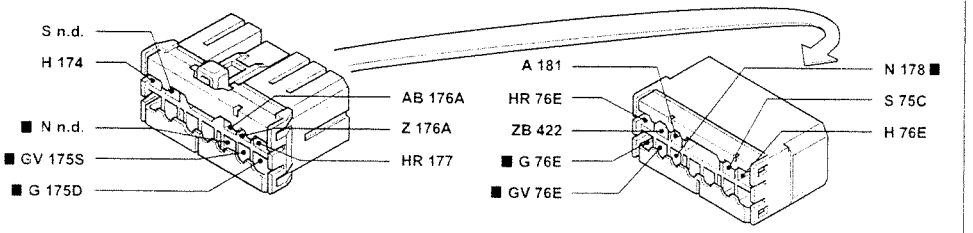

175 Connection between left longitudinal and tailgate cables (Only for Station Wagon versions)

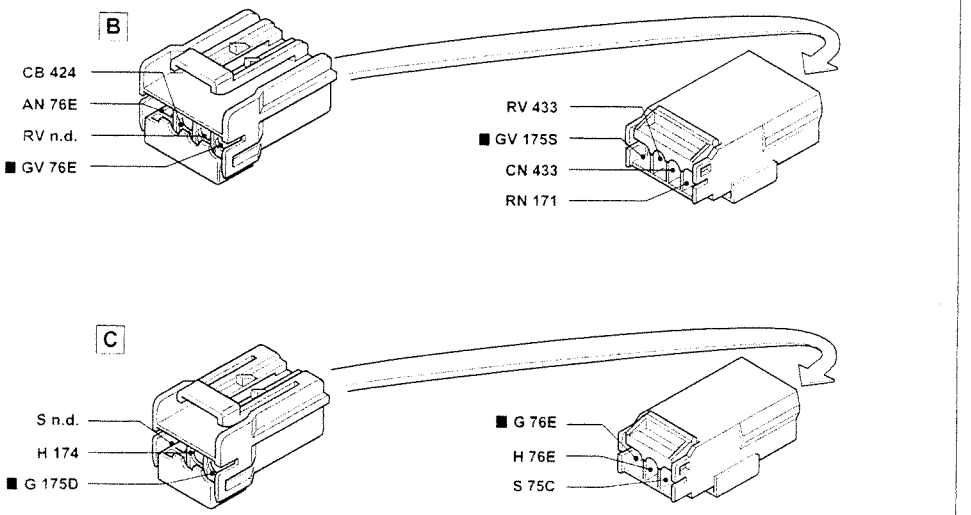

■ The cables in the wiring diagram are marked

P3U104I01

Direction indicators and warning light - Hazard warning lights and warning light - Braking lights - Reversing lights - (See key at end of wiring diagrams)

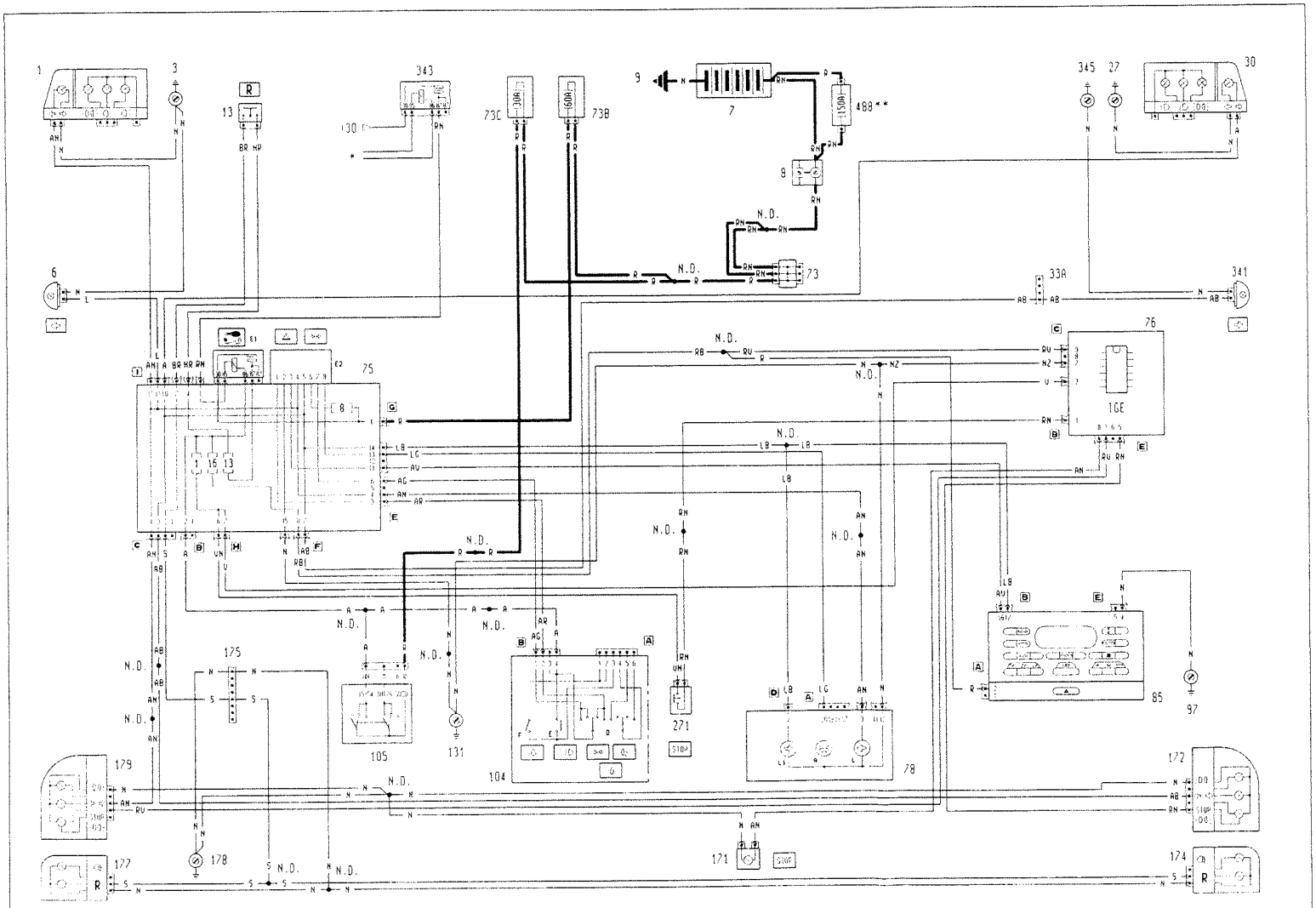

* See starting wiring diagram
** Variant connection for the 2387 JTD version

P30301Z01

30J105I

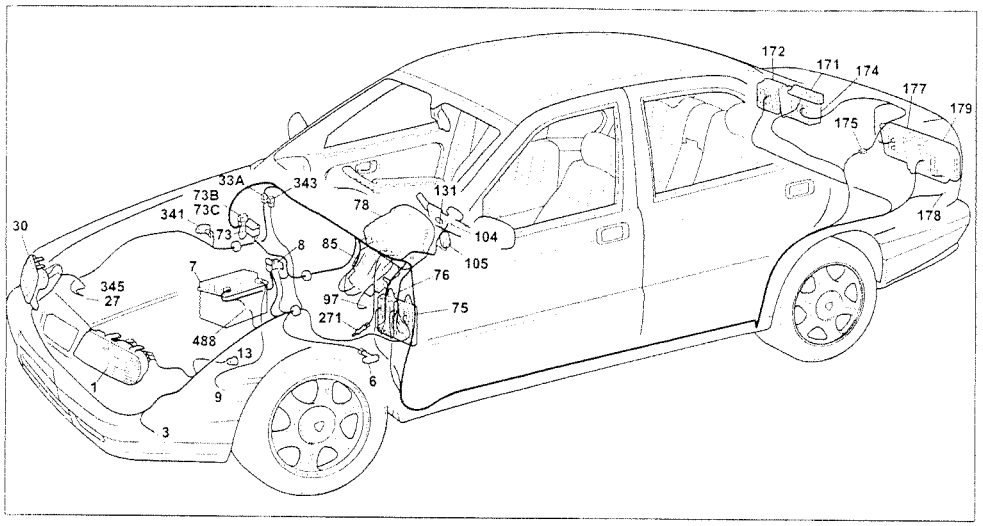

P3U107I01

Direction indicators and warning light - Hazard warning lights and warning light - Braking lights - Reversing lights - Direction indicators / hazard warning lights for trailer warning light

Components key

1 Left front light cluster
3 Left front earth
6 Left side direction indicator
7 Battery
8 Main connector block
9 Earth on bodyshell
13 Reversing lights switch
27 Right front earth
30 Right front light cluster
33A Connection between dash & right engine compartment cables
73 Secondary connector block
73B 60A protective fuse for I.G.E. control unit / junction unit
73C 30A fuse protecting ignition switch / alarm device

75 Junction unit (dashboard)
E2 Intermittent device for direction indicators / hazard warning lights
76 I.G.E. control unit
78 Instrument panel
A Trailer direction indicator warning light
L Left direction indicator warning light
L1 Right direction indicator warning light
85 Infocenter control unit
97 Earth on floor

104 Steering column switch unit
D Switch for direction indicators / parking lights
E Main beam headlamps flasher button
F Main beam headlamps control switch
105 Ignition switch
131 Earth on steering column support
171 Additional brake lights warning light
172 Right rear light cluster on fixed section
174 Right rear light cluster on movable section
175 Connection between left longitudinal and tailgate cables
177 Left rear light cluster on movable section
178 Left rear earth
179 Left rear light cluster on fixed section
271 Brake lights switch
341 Right side direction indicator
343 40A starter relay
345 Right front earth
488 150A maxi fuse

N.D. Ultrasound welding taped in cable loom

33A Connection between dashboard and right engine compartment cables

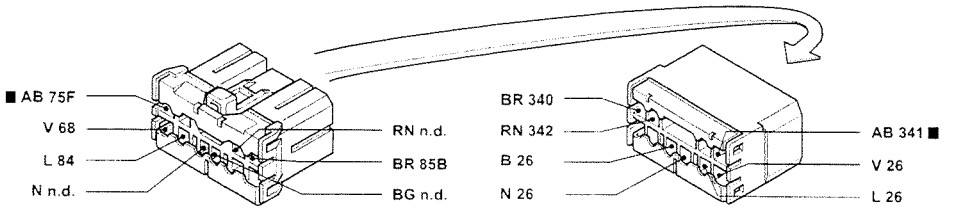

75C Junction unit (dashboard)

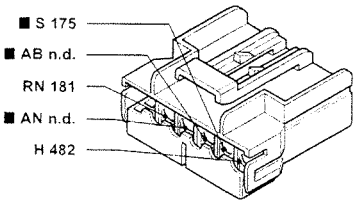

75F Junction unit (dashboard)

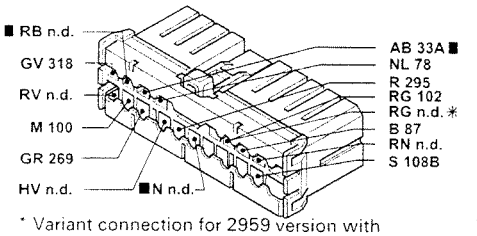

* Variant connection for 2959 version with automatic transmission

78D Fog lights warning light

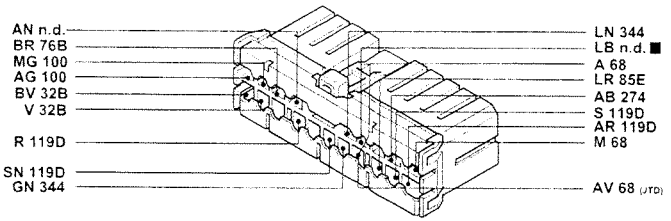

175 Connection between left longitudinal and tailgate cables

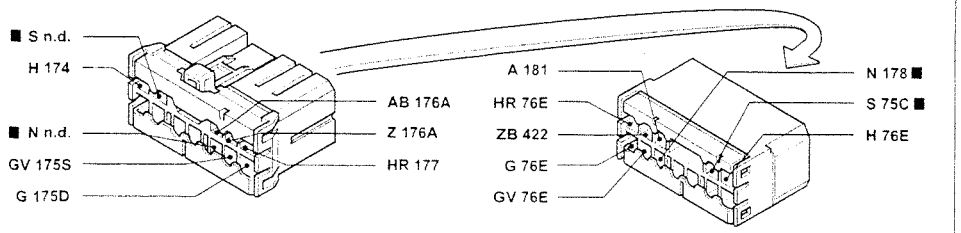

P3U108I01

■ The cables in the wiring diagram are marked

Direction indicators and warning light - Hazard warning lights and warning light - Braking lights - Reversing lights - (See key at end of wiring diagrams)

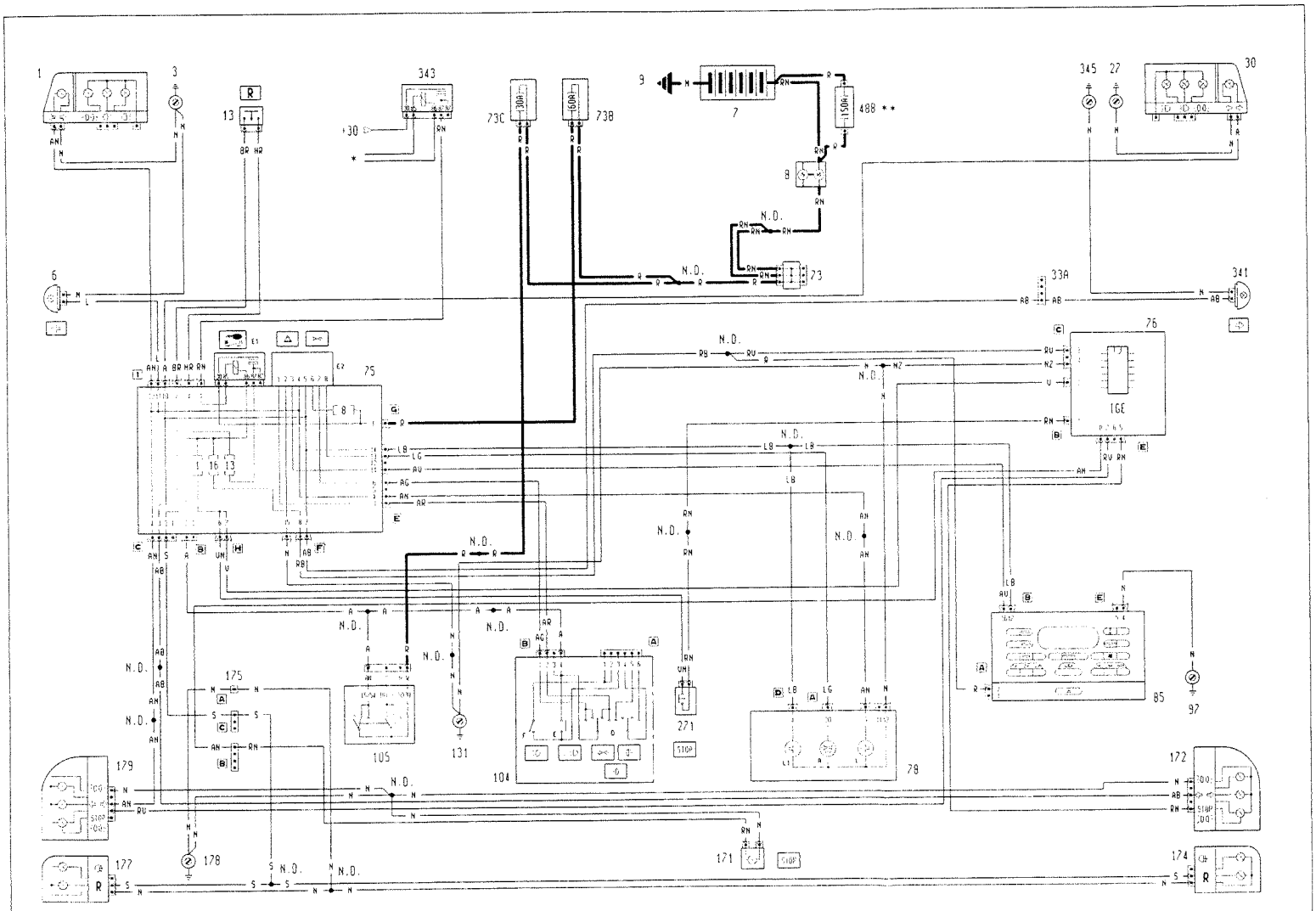

* See starting wiring diagram
** Variant connection for the 2387 JTD version

P3U31IZ01

3U109I

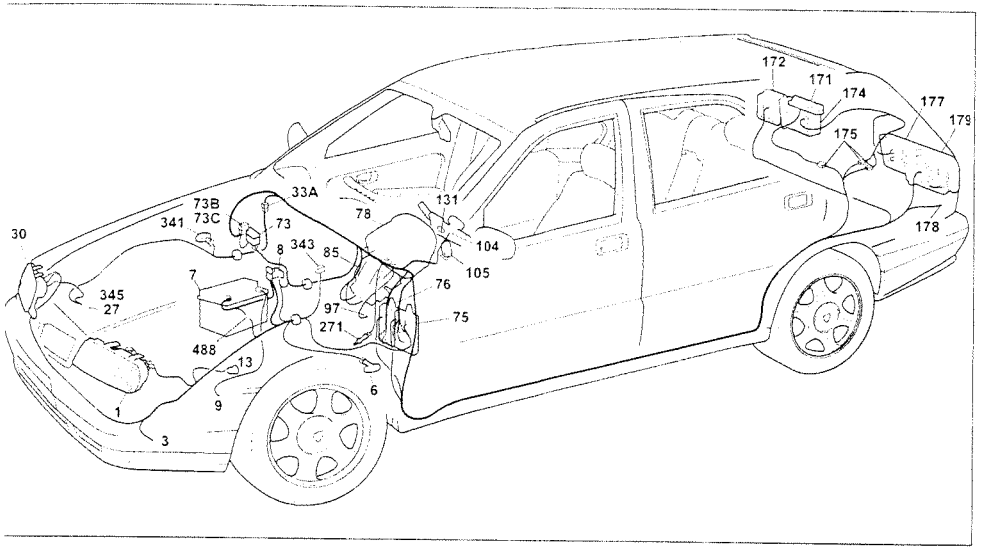

P3U111101

Direction indicators and warning light - Hazard warning lights and warning light - Braking lights - Reversing lights

Components key

1 Left front light cluster
3 Left front earth
6 Left side direction indicator
7 Battery
8 Main connector block
9 Earth on bodyshell
13 Reversing lights switch
27 Right front earth
30 Right front light cluster
33A Connection between dash & right engine compartment cables
73 Secondary connector block
73B 60A protective fuse for I.G.E. control unit / junction unit
73C 30A fuse protecting ignition switch/alarm device

75 Junction unit (dashboard)
E1 Ignition discharge relay
E2 Intermittent device for direction indicators / hazard warning lights
76 I.G.E. control unit
78 Instrument panel
A Trailer direction indicator warning light
L Left direction indicator warning light
L1 Right direction indicator warning light
85 Infocenter control unit
97 Earth on floor

104 Steering column switch unit
D Switch for direction indicators / parking lights
E Main beam headlamps flasher button
F Main beam headlamps control switch
105 Ignition switch
131 Earth on steering column support
171 Additional brake lights warning light
172 Right rear light cluster on fixed section
174 Right rear light cluster on moveable section
175 Connection between left longitudinal and tailgate cables
177 Left rear light cluster on moveable section
178 Left rear earth
179 Left rear light cluster on fixed section
271 Brake lights switch
341 Right side direction indicator
343 40A starter relay
345 Right front earth
488 150A maxi fuse

N.D. Ultrasound welding taped in cable loom

33A Connection between dashboard and right engine compartment cables

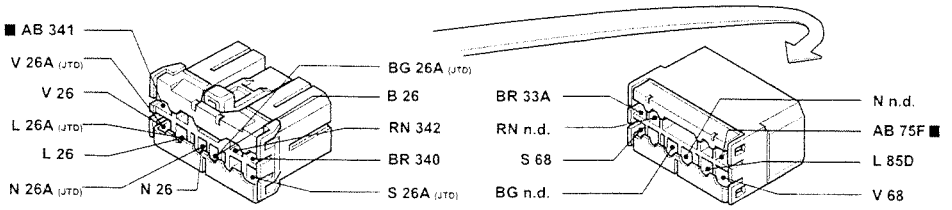

175 Connection between left longitudinal and tailgate cables (Only for Station Wagon versions)

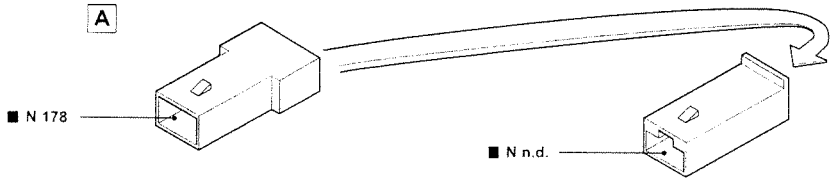

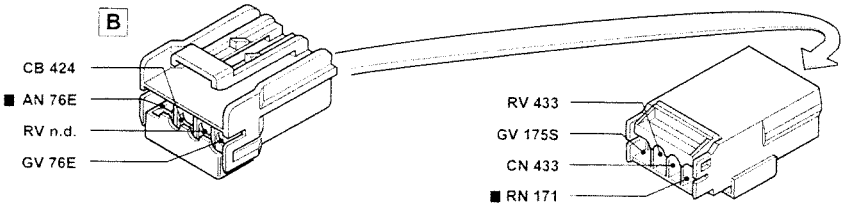

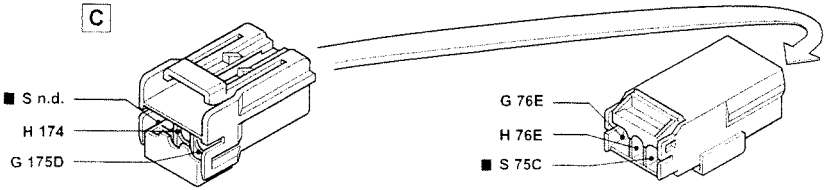

■ The cables in the wiring diagram are marked

P3U112101

Fog lights and warning light - Rear fog lamps and warning light - (See key at end of wiring diagrams)

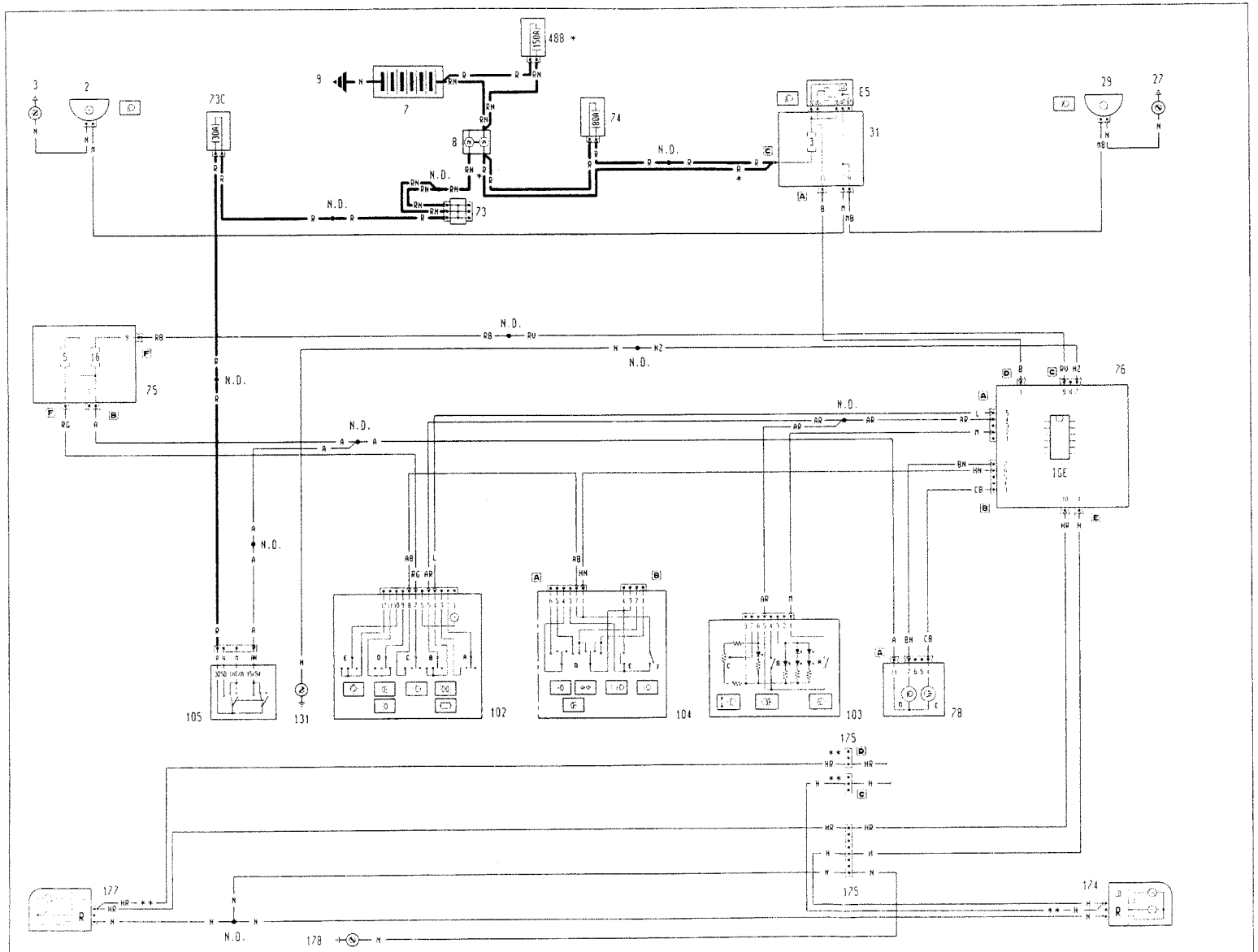

P3U321Z01

3U1131

Copyright by Fiat Auto

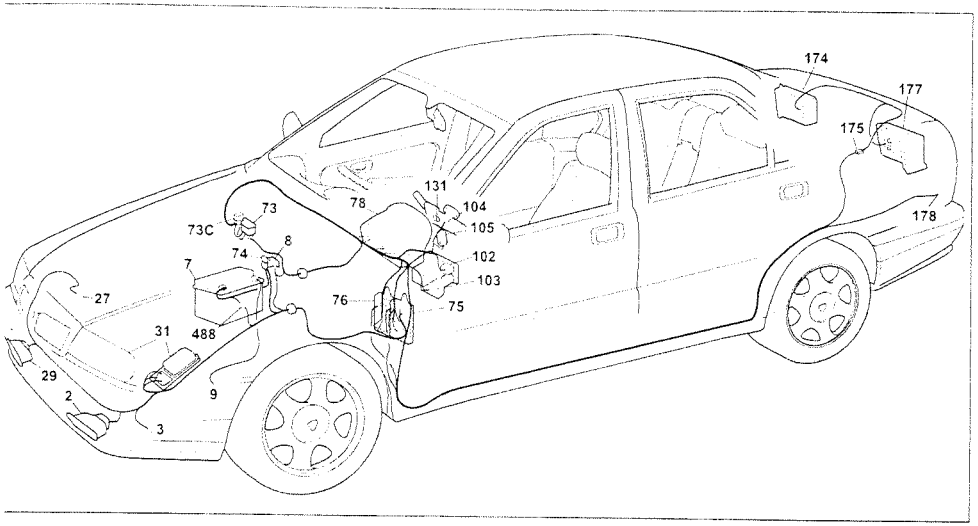

P3U115I01

og lights and warning light - Rear fog lamps and warning light

omponents key

2 Left fog lamp
3 Left front earth
7 Battery
8 Main connector block
9 Earth on bodyshell
27 Right front earth
29 Right fog lamp
31 Peripheral control unit (engine compartment)
E5 Fog lights relay
3C 30A fuse protecting ignition switch/alarm device
74 80A fuse protecting peripheral control unit (engine compartment)
75 Junction unit (dashboard)
76 I.G.E. control unit
78 Instrument panel
D Fog lights warning light
E Rear fog lamps warning light
02 Exterior lights control unit
03 Switch control unit
A Fog lights switch
B Rear fog lamps control switch
C Headlamp alignment control unit
04 Steering column switch unit
05 Ignition switch
31 Earth on steering column support
74 Right rear light cluster on moveable section
75 Connection between left longitudinal and tailgate cables
77 Left rear light cluster on moveable section
78 Left rear earth
98 150A maxi fuse

) Ultrasound welding taperd in cable loom

76E I.G.E. control unit

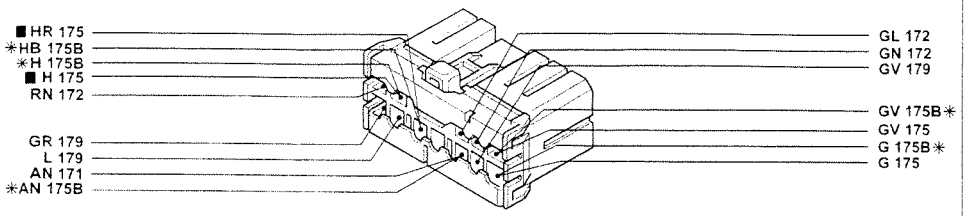

* Variant connection for Station Wagon versions

175 Connection between left longitudinal and tailgate cables

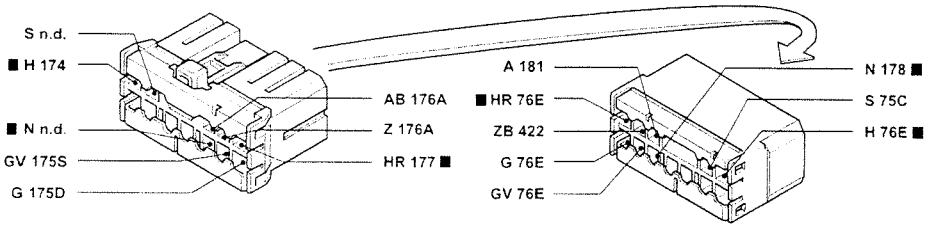

175 Connection between left longitudinal and tailgate cables (Only for Station Wagon versions)

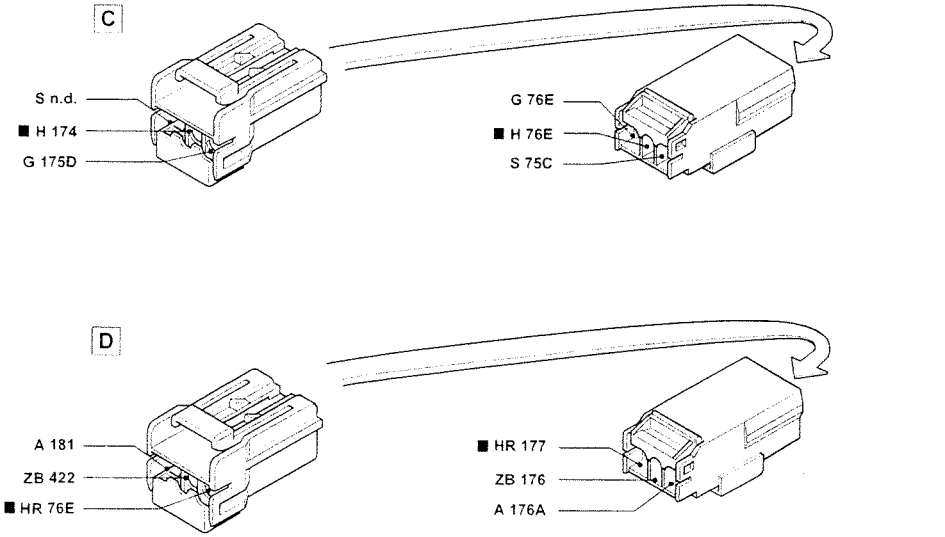

■ The cables in the wiring diagram are marked

P3U116I01

Windscreen wash/wipe - Headlamp washer - Electric horns - (See key at end of wiring diagrams)

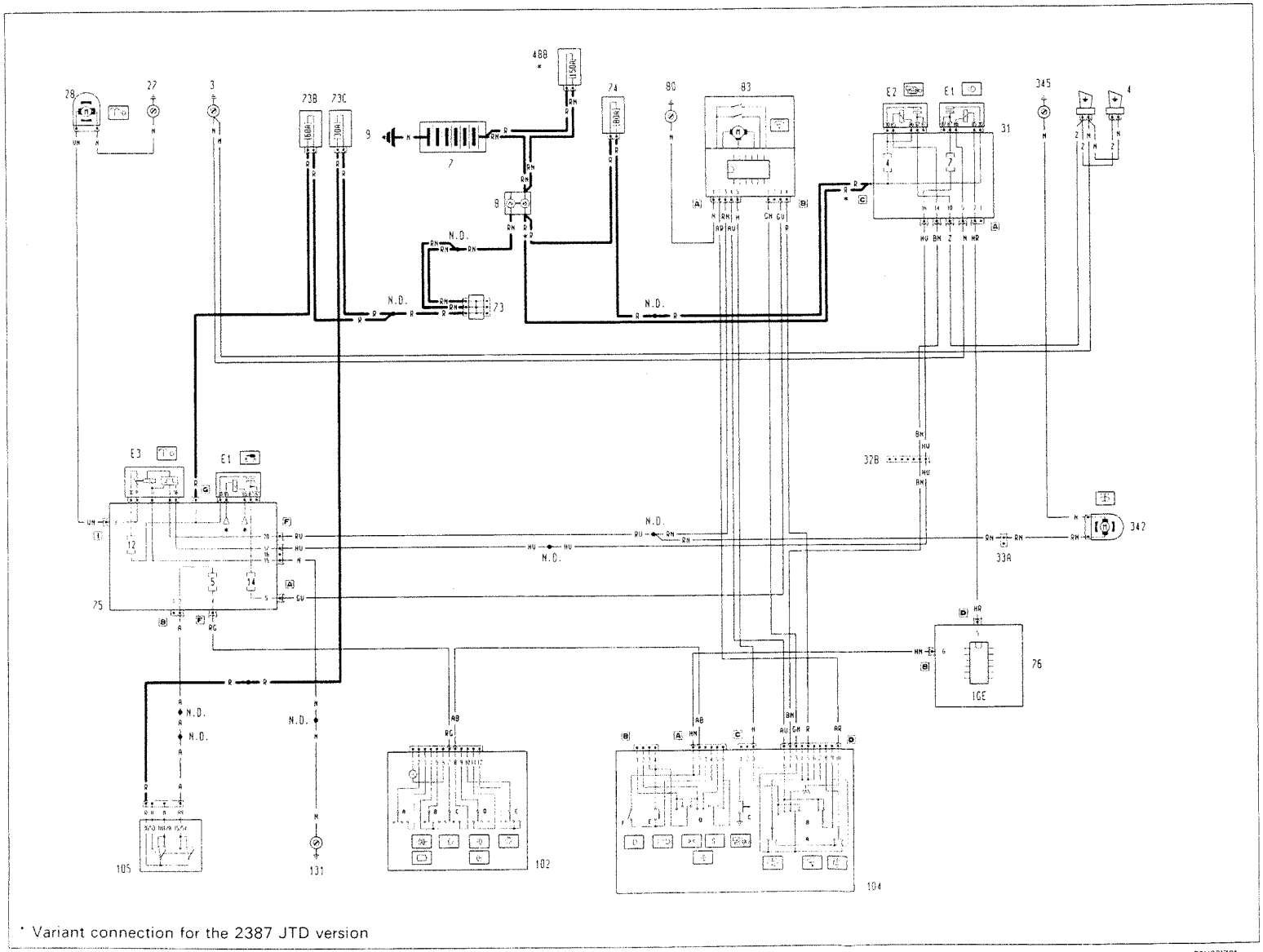

* Variant connection for the 2387 JTD version

P3U331Z01

3U117I

Copyright by Fiat Auto

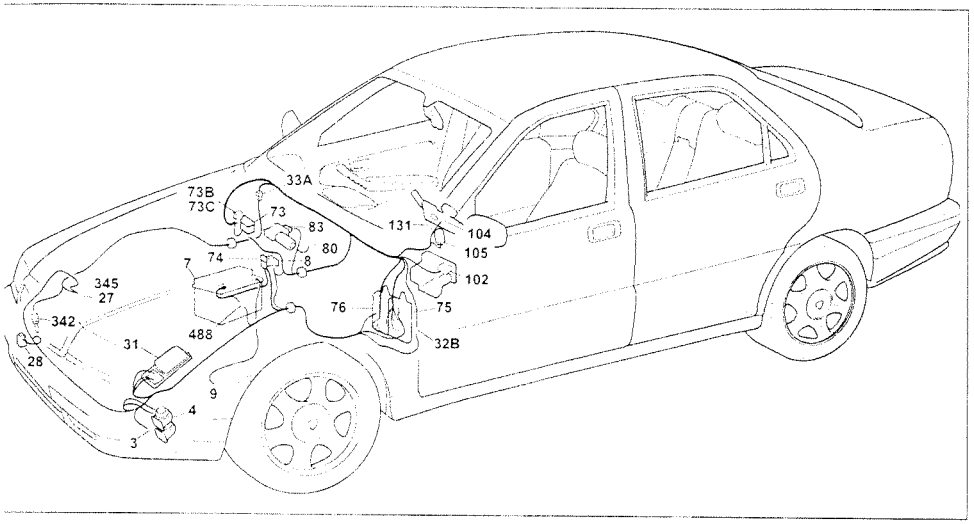

P3U119I01

Windscreen wash/wipe - Headlamp washer - Electric horns

Components key

3 Left front earth
4 Electric horns
7 Battery
8 Main connector block
9 Earth on bodyshell
27 Right front earth
28 Electric headlamp washer pump
31 Peripheral control unit (engine compartment)
E1 Dipped headlamps relay feed
E2 Horn relay feed
32B Connection between dash. & left engine compartment cables
33A Connection between dash. & right engine compartment cables
73 Secondary connector block
73B 60A protective fuse for I.G.E. control unit / junction unit
73C 30A fuse protecting ignition switch alarm device

74 60A protective fuse for peripheral control unit (engine compartment)
75 Junction unit (dashboard)
E1 Ignition discharge relay
E3 Intermittent device for headlamp washer
76 I.G.E. control unit
80 Power earth on dashboard
83 Windscreen wiper control unit

102 Exterior lights control unit
B Switch for side lights / number plate lights
C Control switch for dipped beam headlamps / main beam headlamps
D Parking lights control switch
E Ideogram lights control switch
104 Steering column switch unit
A Windscreen washer / headlamp washer control switch
B Windscreen wiper control switch
C Horn control
D Switch for direction indicators / parking lights
E Main beam headlamps flasher button
F Main beam headlamps control switch
105 Ignition switch
131 Earth on steering column support
342 Electric windscreen washer pump
345 Right front earth
488 150A maxi fuse

N.D. Ultrasound welding taped in cable loom

31A Peripheral control unit (engine comp.)

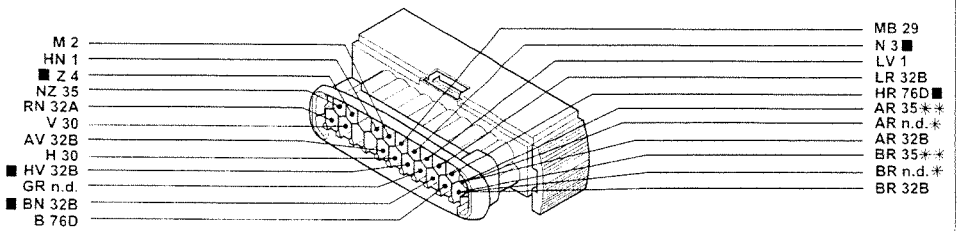

* Variant connection for 2387 TD
** Variant connection for 1998 20v T versions with air conditioning - 2387 JTD

32B Connection between dashboard and left engine compartment cables

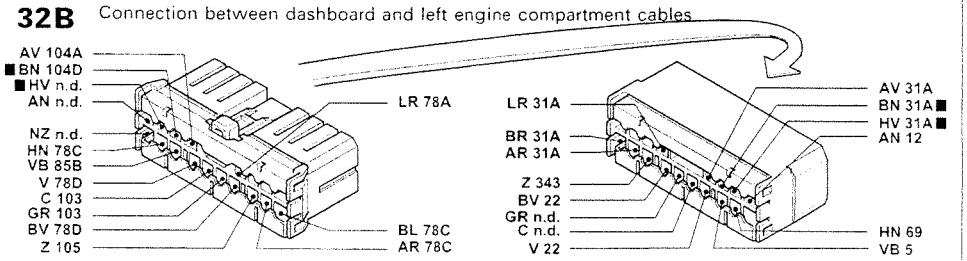

33A Connection between dashboard and right engine compartment cables

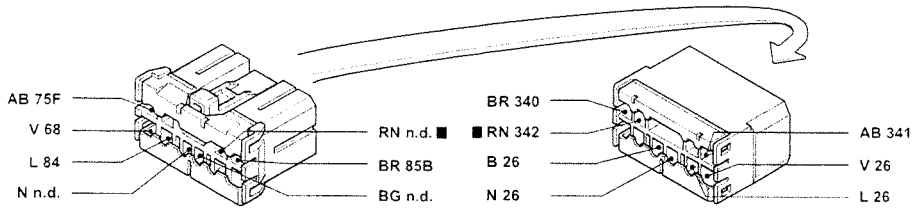

76B I.G.E. control unit

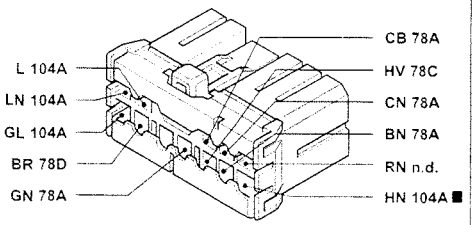

76D I.G.E. control unit.

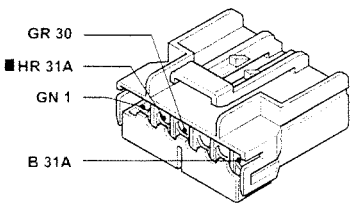

P3U120I01

■ The cables in the wiring diagram are marked

Windscreen wash/wipe - Headlamp washer - Electric horns - (See key at end of wiring diagrams)

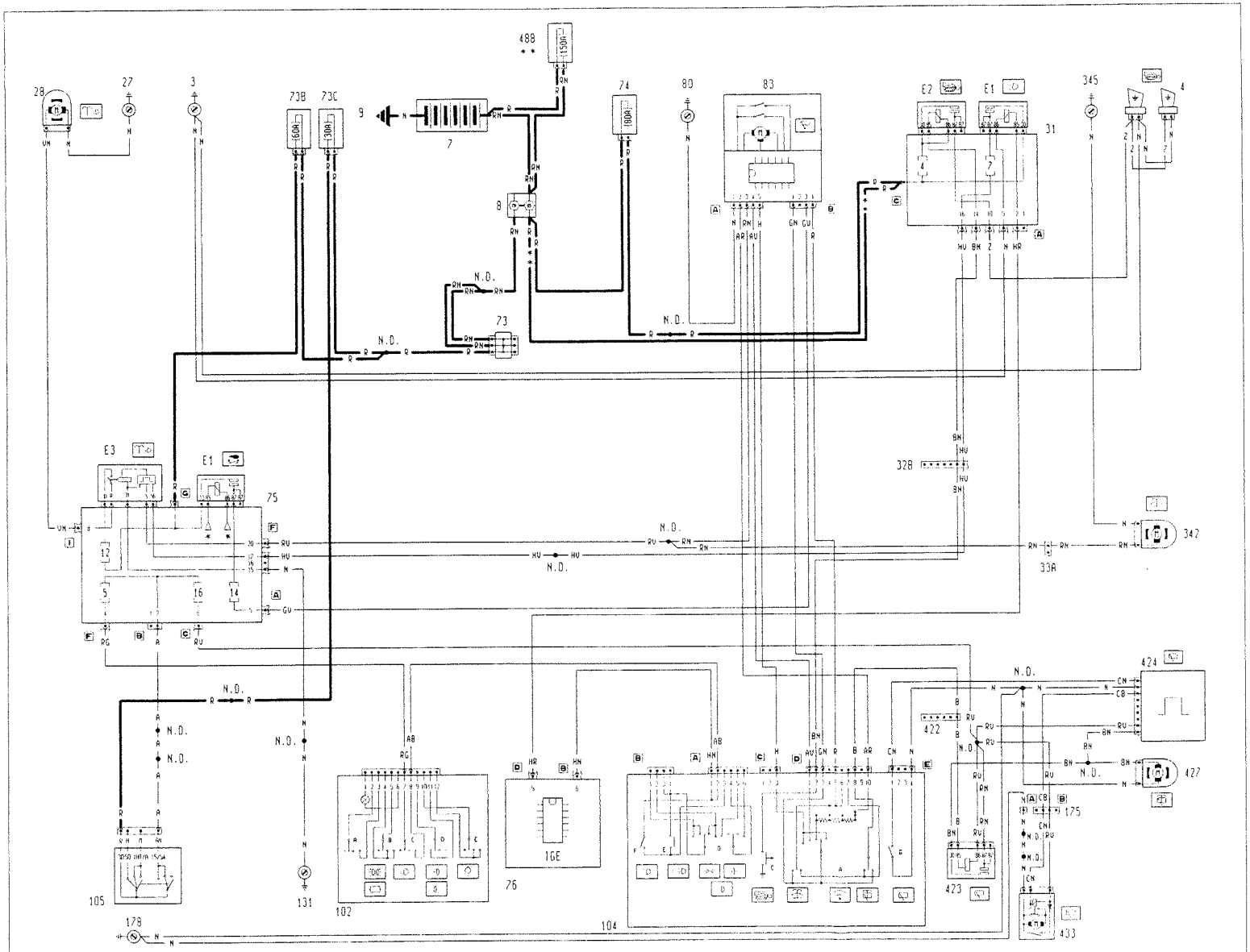

* See starting wiring diagram

** Variant connection for the 2387 JTD version

P3U341Z01

3U1211

Copyright by Fiat Auto

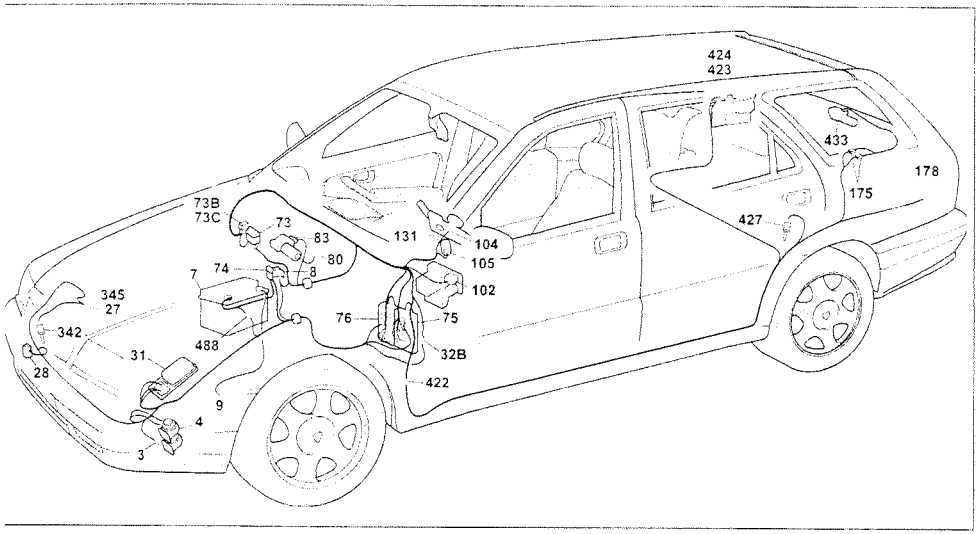

P3U123I01

Windscreen wash/wipe - Headlamp washer - Electric horns

Components key

3 Left front earth
4 Electric horns
7 Battery
8 Main connector block
9 Earth on bodyshell
27 Right front earth
28 Electric headlamp washer pump
31 Peripheral control unit (engine compartment)
E1 Dipped headlamps relay feed
E2 Horn relay feed
32B Connection between dash & left engine compartment cables
33A Connection between dash & right engine compartment cables
73 Secondary connector block
73B 60A protective fuse for I.G.E. control unit / junction unit
73C 30A fuse protecting ignition switch/alarm device

74 80A fuse protecting peripheral control unit (engine compartment)
75 Junction unit (dashboard)
E1 Ignition discharge relay
E3 Intermittent device for headlamp washer
76 I.G.E. control unit
80 Power earth on dashboard
83 Windscreen wiper control unit
102 Exterior lights control unit
B Switch for side lights / number plate lights
C Control switch for dipped beam headlamps / main beam headlamps
D Control switch for parking lights
E Control switch for ideogram lights

104 Steering column switch unit
A Control switch for windscreen washer / headlamp washer
B Windscreen wiper control switch
C Horn control
D Switch for direction indicators / parking lights
E Main beam headlamps flasher button
F Control switch for main beam headlamps
G Control switch for rearscreen wash/wipe
105 Ignition switch
131 Earth on steering column support
175 Connection between left longitudinal and tailgate cables
178 Left rear earth
342 Electric windscreen washer pump
345 Right front earth
422 Connection for dashboard / left longitudinal cables
423 Rearscreen wiper control switch
424 Intermittent device for rearscreen wiper
427 Electric pump for rearscreen washer
433 Rearscreen wiper motor
488 150A maxi fuse

N.D. Ultrasound welding taped in cable loom

33A Connection between dashboard and right engine compartment cables

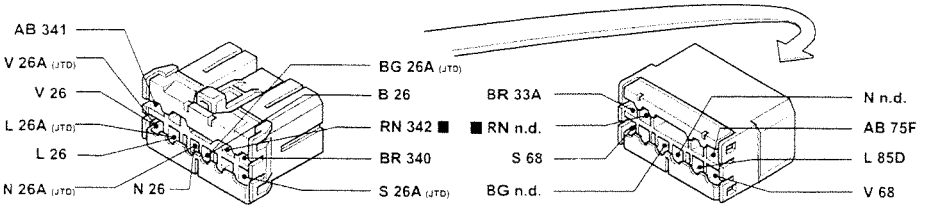

175 Connection between left longitudinal and tailgate cables (Only for Station Wagon versions)

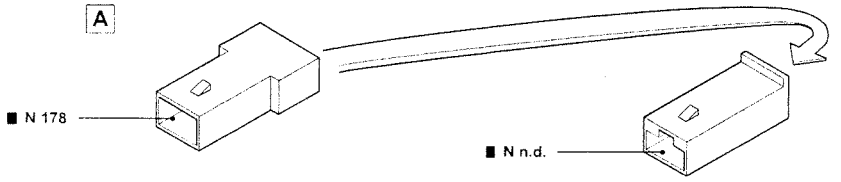

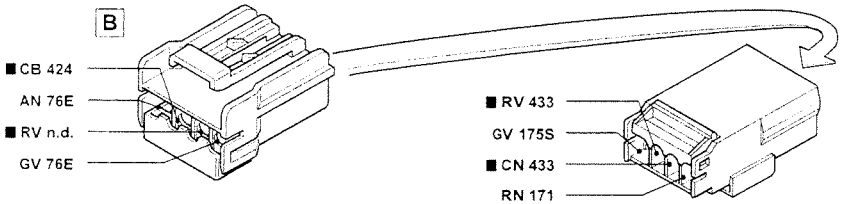

422 Connection between dashboard and left longitudinal cables (Only for Station Wagon versions)

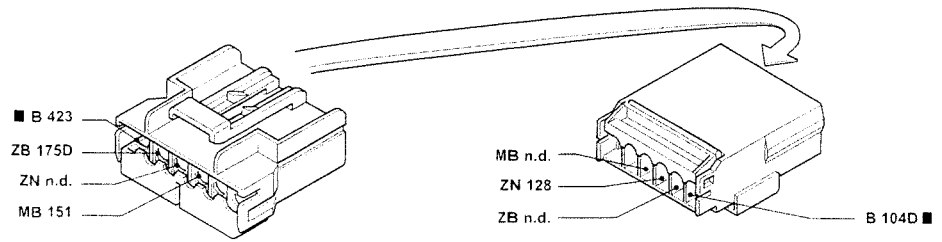

■ The cables in the wiring diagram are marked

P3U124I01

3U124I

Vehicle interior lights - (See key at end of wiring diagrams)

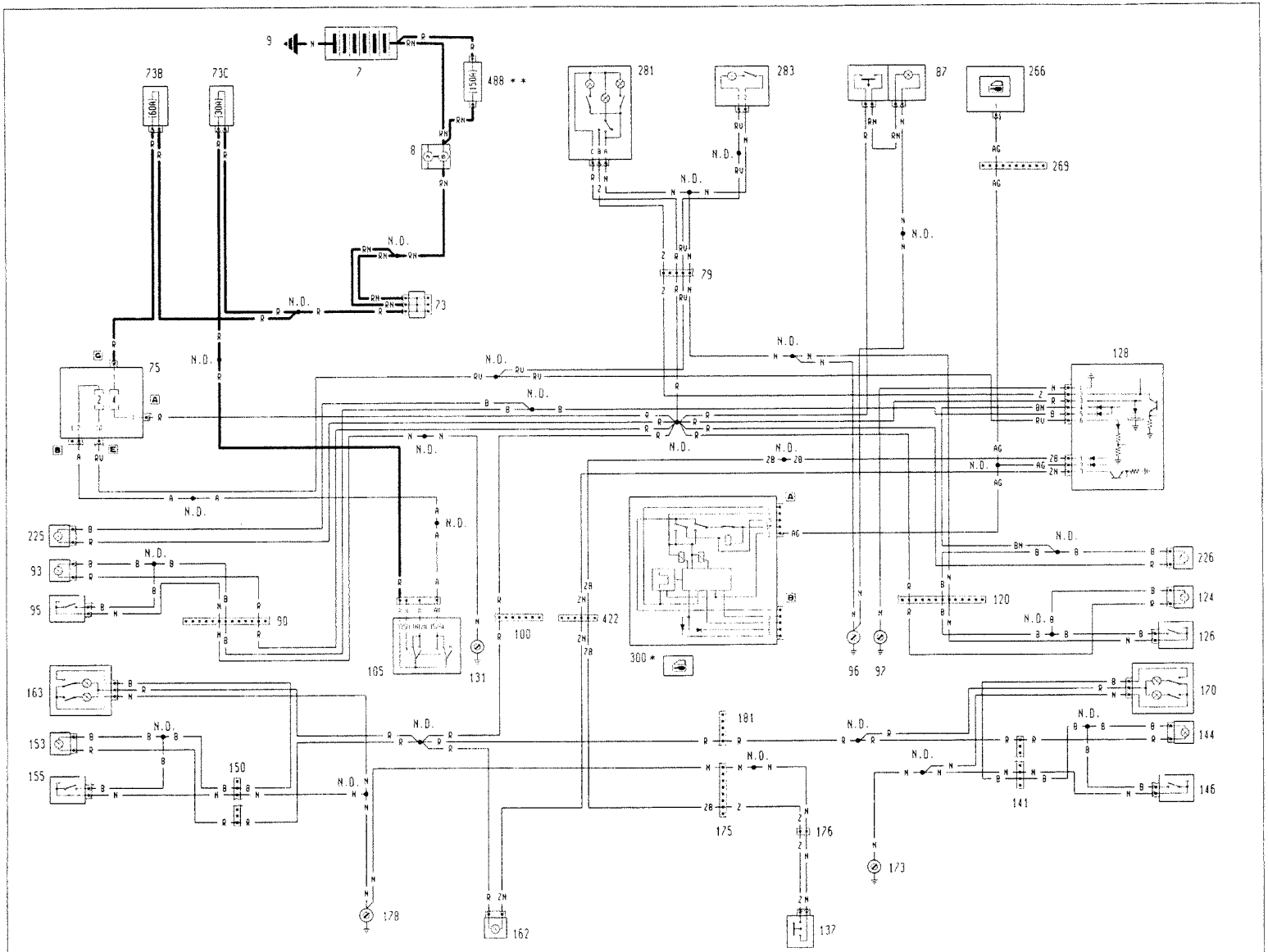

* See central locking wiring diagram
** Variant connection for the 2387 JTD version

P3U35IZ01

3U125I

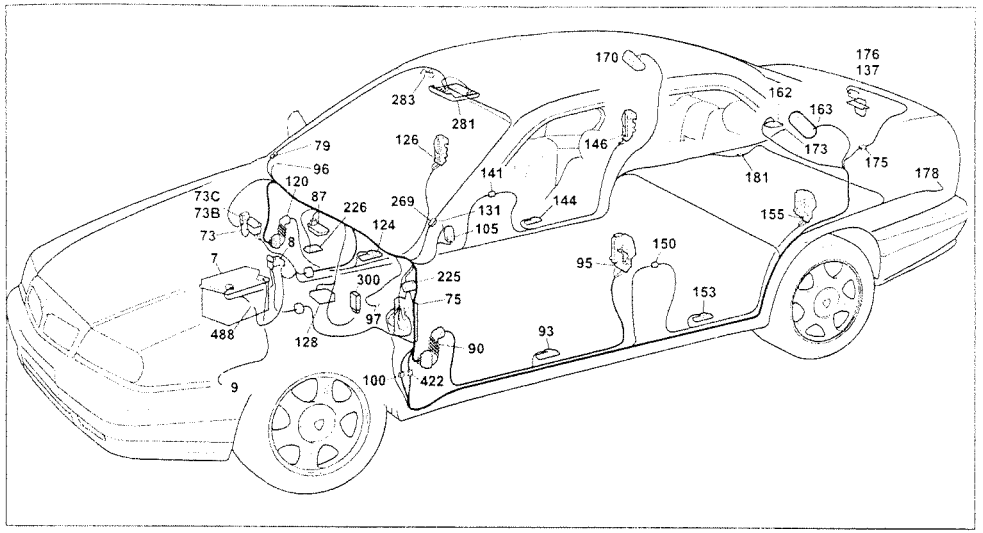

P3U127101

Vehicle interior lights

Components key

7 Battery
8 Main connector block
9 Earth on bodyshell
73 Secondary connector block
73B 60A protective fuse for I.G.E. control unit / junction unit
73C 30A fuse protecting ignition switch/alarm device
75 Junction unit (dashboard)
79 Connection between dashboard and courtesy light cables
87 Light for luggage comp. / controls for unlocking luggage comp.
90 Connection between dashboard and left front door cables
93 Light in left front door
95 Left front central locking geared motor and signalling left front door open and engaging alarm device
96 Earth on carrier
97 Earth on floor
100 Connection between dashboard and left longitudinal cables
105 Ignition switch
120 Connection between dashboard and right front door cables
124 Light in right front door
128 Right front central locking geared motor and signalling right front door open and alarm on
131 Timer for front courtesy light
141 Earth on steering column support
137 Tailgate lock assembly
141 Connection between right longitudinal and right rear door cables
144 Light in right rear door
146 Right rear door central locking geared motor and signalling right rear door open and alarm on
150 Connection between left longitudinal and left rear door cables
153 Light in left rear door
155 Left rear door central locking geared motor and signalling left rear door open and alarm on
162 Luggage compartment courtesy light
163 Left rear courtesy light
170 Right rear courtesy light
173 Right rear earth
175 Connection between left longitudinal and tailgate cables
176 Tailgate cables connection
178 Left rear earth
181 Connection between left longitudinal and right longitudinal cables
225 Left floor light
226 Right floor light
266 Infra red receiver for alarm device
281 Front courtesy light
283 Passenger light
300 Central locking electronic control unit
422 Connection between dashboard and left longitudinal cables
488 150A maxi fuse
N.D. Ultrasound welding taped in cable loom

120 Connection between dashboard and right front door cables

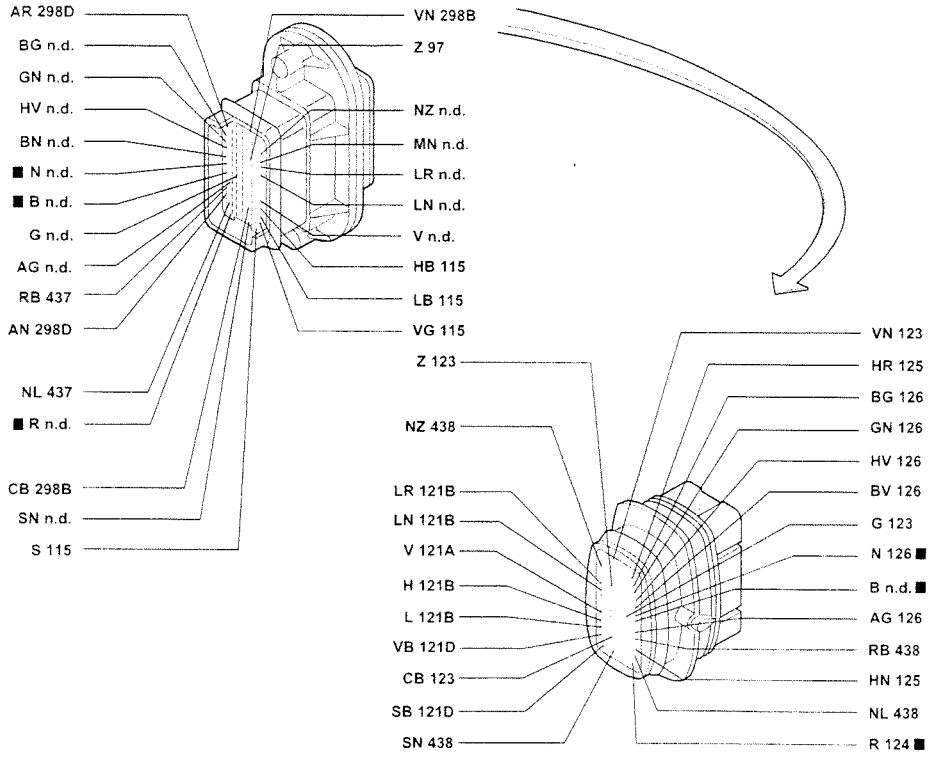

181 Connection between left longitudinal and right longitudinal cables

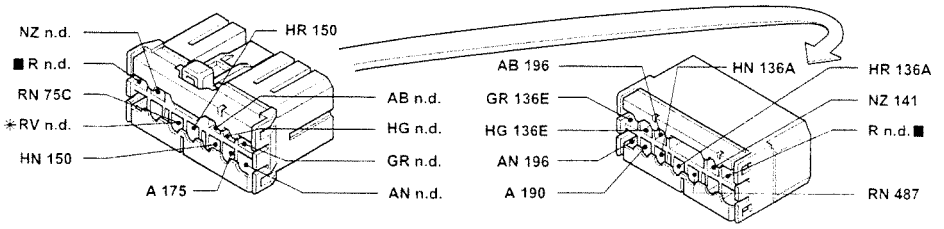

* Variant connection for versions with top of the range radio

■ The cables in the wiring diagram are marked

P3U128101

Vehicle interior lights - (See key at end of wiring diagrams)

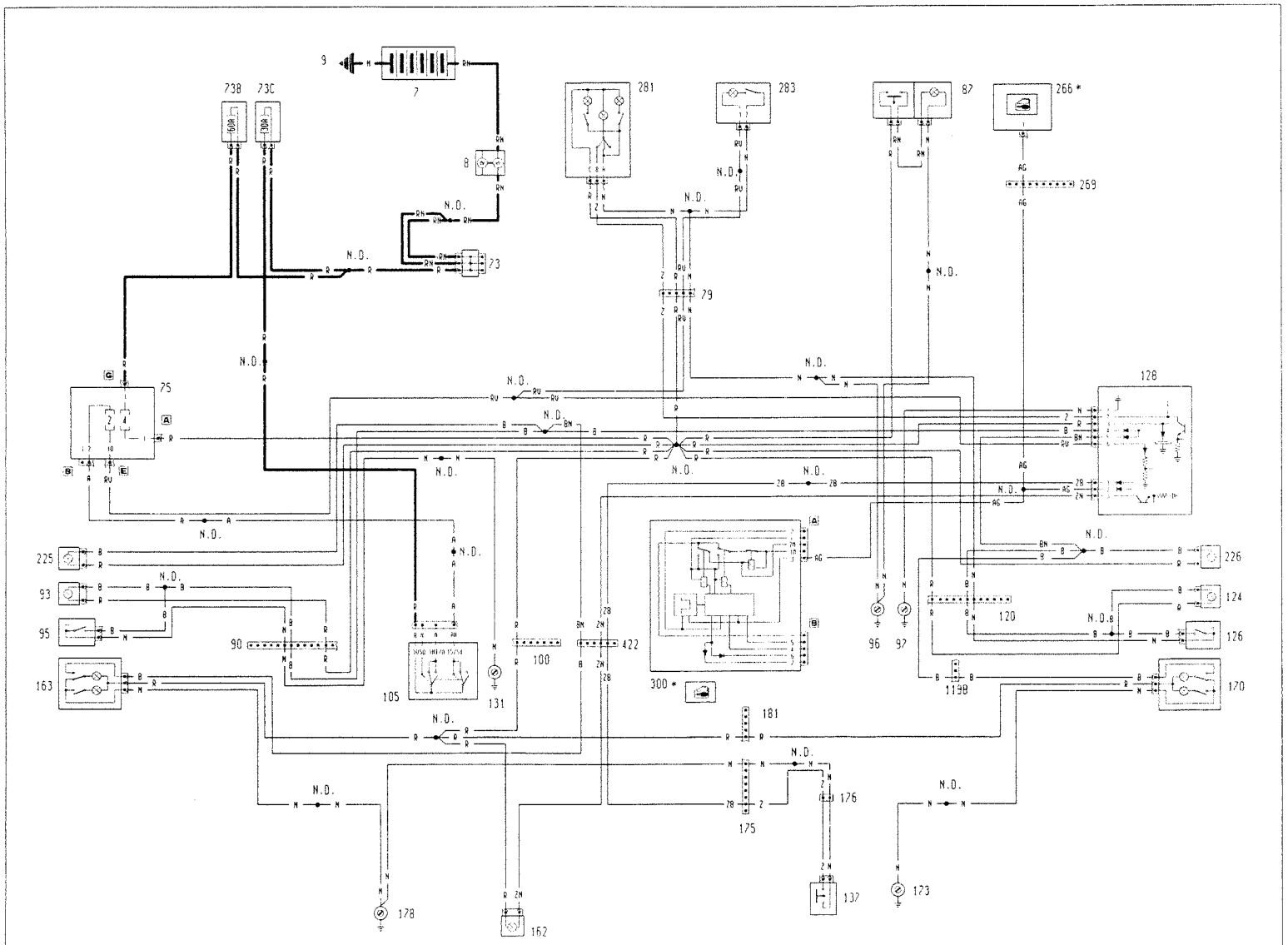

* See central locking wiring diagram

P3U36IZ01

3U129I

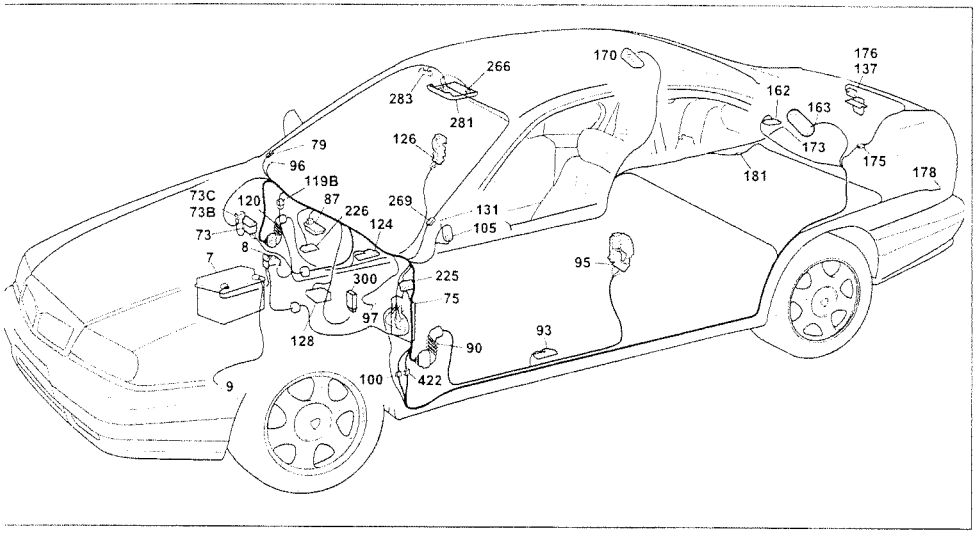

P3U131I01

Vehicle interior lights

Components key

7 Battery
8 Main connector block
9 Earth on bodyshell
73 Secondary connector block
73B 60A protective fuse for I.G.E. control unit / junction unit
73C 30A fuse protecting ignition switch/alarm device
75 Junction unit (dashboard)
79 Connection between dash. and courtesy light cables
87 Light for glove compartment / controls for unlocking luggage compartment
90 Connection between dashboard and left front door cables
93 Light in left front door
95 Left front central locking geared motor and signalling left front door open and alarm on
96 Earth on carrier
97 Earth on floor
100 Connection between dashboard and left longitudinal cables
105 Ignition switch
119B Connection between dashboard and right longitudinal cables
120 Connection between dashboard and right front door cables
124 Light in right front door
126 Right front central locking geared motor and signalling right front door open and alarm on
128 Timer for front courtesy light
131 Earth on steering column support
137 Tailgate lock assembly
162 Luggage compartment courtesy light
163 Left rear courtesy light
170 Right rear courtesy light
173 Right rear earth
175 Connection between left longitudinal and tailgate cables
176 Tailgate cables connection
178 Left rear earth
181 Connection between left longitudinal and right longitudinal cables
225 Left floor light
226 Right floor light
266 Infra red receiver for alarm device
269 Connection between dashboard and receiver cables
281 Front courtesy light
283 Passenger side courtesy light
300 Central locking electronic control unit
422 Connection between dashboard and left longitudinal cables
N.D. Ultrasound welding taped in cable loom

90 Connection between dashboard and left front door cables

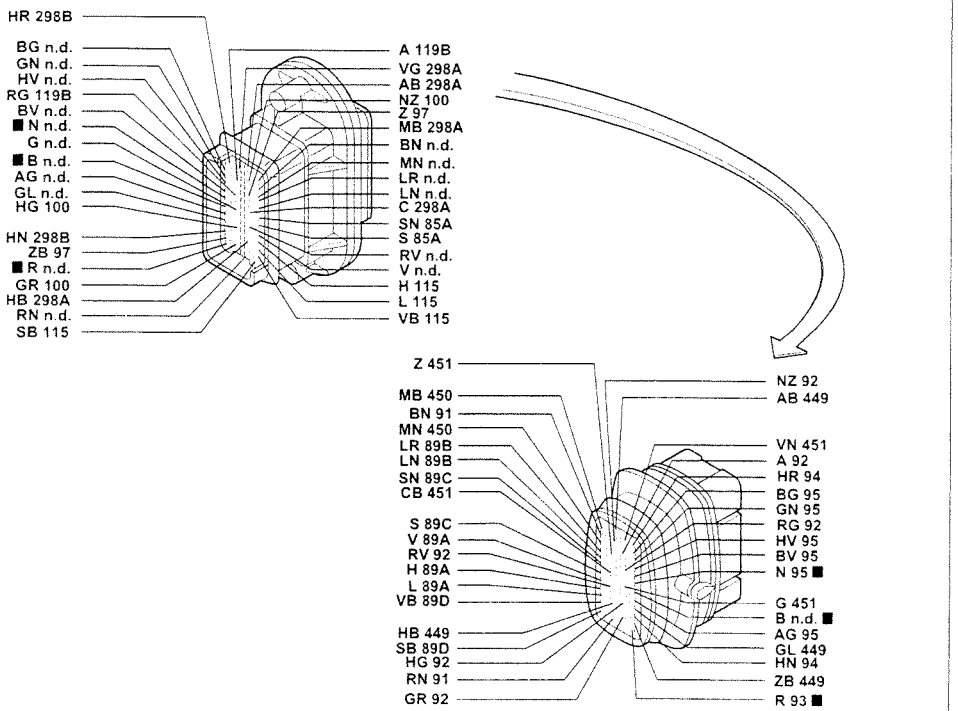

181 Connection between left longitudinal and right longitudinal cables

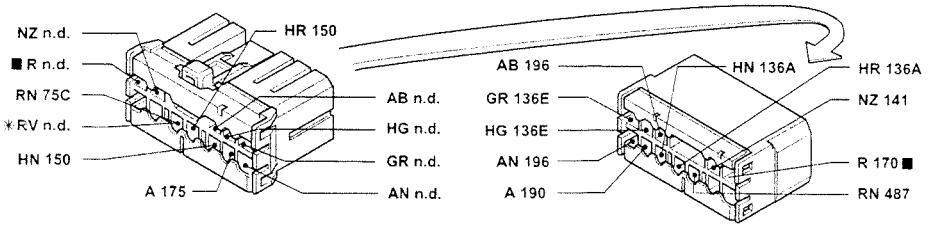

* Variant connection for versions with top of the range radio

■ The cables in the wiring diagram are marked

P3U132I01

Vehicle interior lights - (See key at end of wiring diagrams)

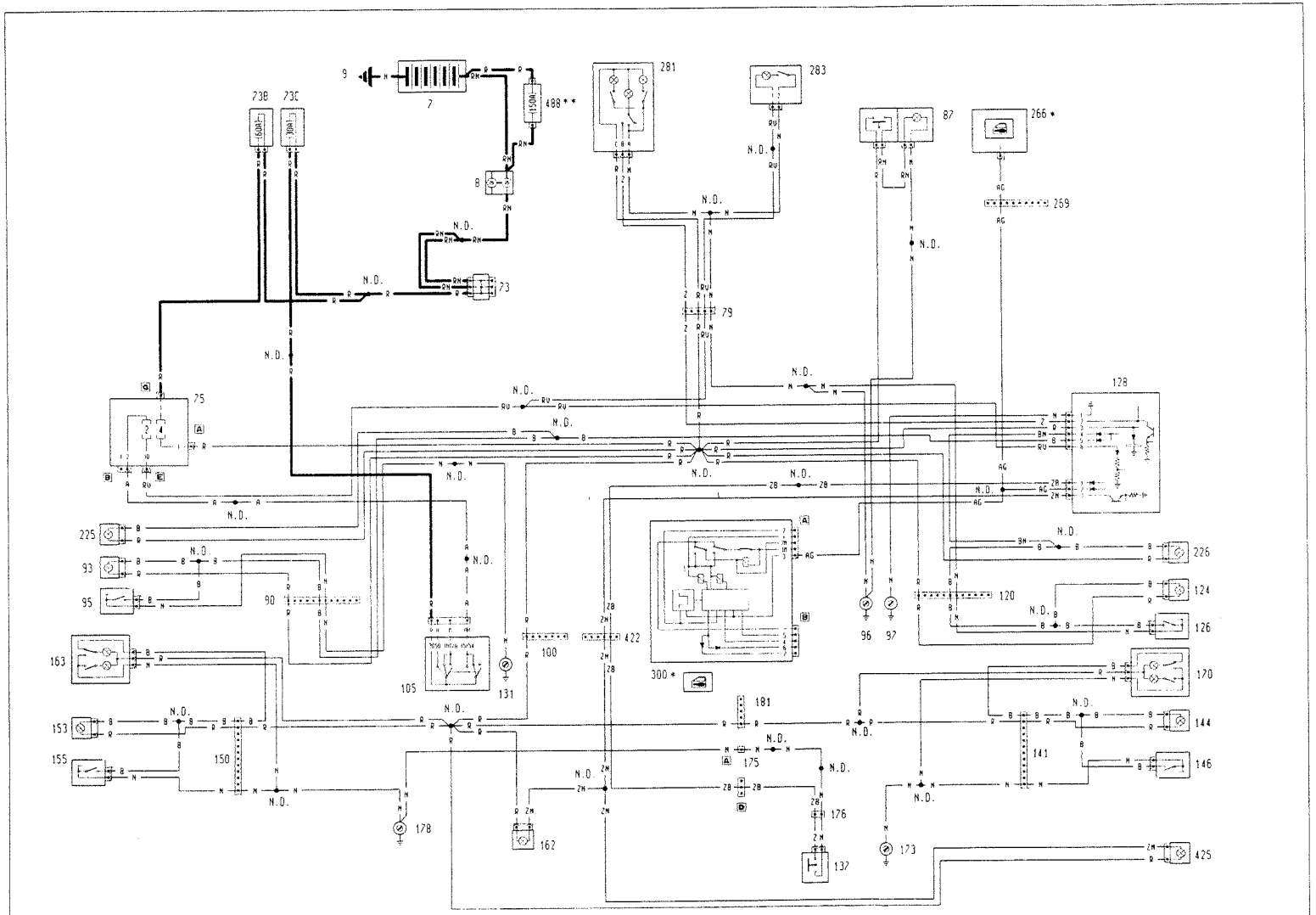

* See central locking wiring diagram
** Variant connection for the 2387 JTD version

P3U37I201

3U133I

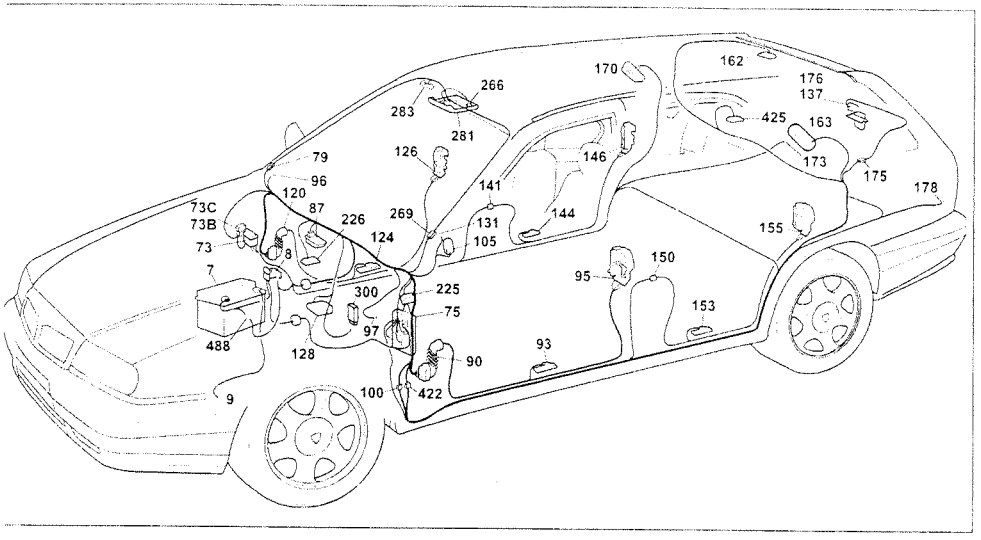

P3U135I01

Vehicle interior lights

Components key

7 Battery
8 Main connector block
9 Earth on bodyshell
73 Secondary connector block
73B 60A protective fuse for I.G.E. control unit / junction unit
73C 30A fuse protecting ignition switch/alarm device
75 Junction unit (dashboard)
79 Connection between dashboard and courtesy light cables
87 Light for glove compartment / controls for unlocking luggage comp.
90 Connection between dashboard and left front door cables
93 Light in left front door
95 Left front central locking geared motor and signalling left front door open and alarm on
96 Earth on carrier
97 Earth on floor
100 Connection between dashboard and left longitudinal cables
105 Ignition switch
120 Connection between dashboard and right front door cables
124 Light in right front door
126 Right front central locking geared motor and signalling right front door open and alarm on
128 Timer for front / boot courtesy light
131 Earth on steering column support
137 Tailgate lock assembly
141 Connection between right longitudinal and right rear door cables
144 Light in right rear door
146 Right rear door central locking geared motor and signalling right rear door open and alarm on
150 Connection between left longitudinal and left rear door cables
153 Light in left rear door
155 Left rear door central locking geared motor and signalling left rear door open and alarm on
162 Luggage compartment courtesy light
163 Left rear courtesy light
170 Right rear courtesy light
173 Right rear earth
175 Connection between left longitudinal and tailgate cables
176 Tailgate cables connection
178 Left rear earth
181 Connection between left longitudinal and right longitudinal cables
225 Left floor light
226 Right floor light
266 Infra red receiver for alarm device
269 Connection between dashboard and receiver cables
281 Front courtesy light
283 Passenger side courtesy light
300 Central locking electronic control unit
422 Connection between dashboard and left longitudinal cables
425 Right luggage compartment light
488 150A maxi fuse

N.D. Ultrasound welding taped in cable loom

141 Connection between right longitudinal and right rear door cables

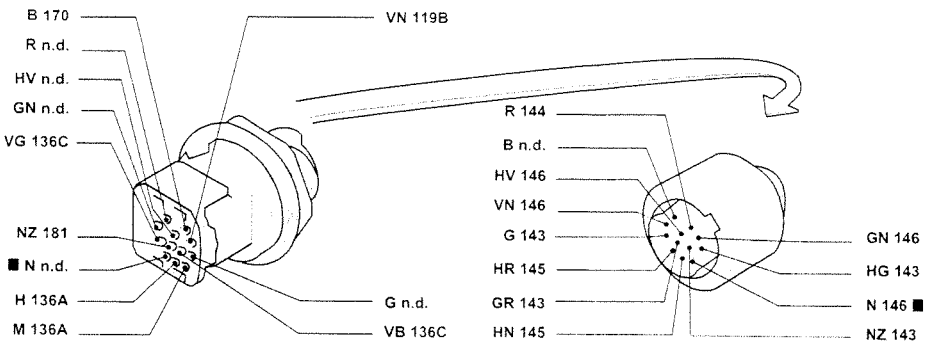

150 Connection between left longitudinal and left rear door cables

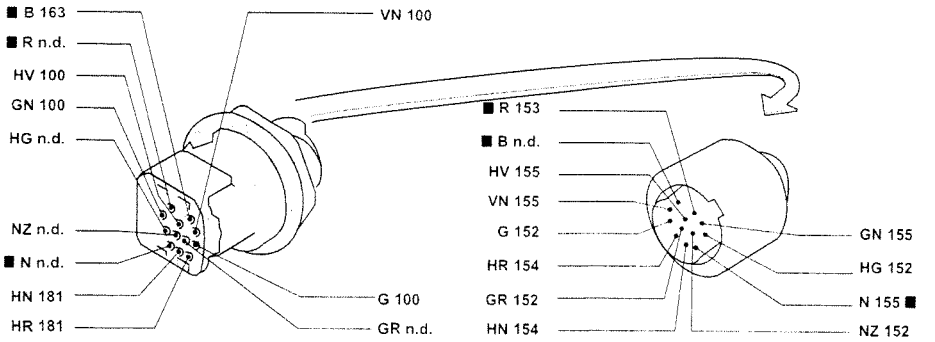

■ The cables in the wiring diagram are marked

P3U136I01

Petrol versions
Fuel gauge and reserve warning light - Handbrake warning light - Insufficient brake fluid level warning light - Seat belt unfastened warning light - Speedometer - Milometer/trip meter and zeroing button - Rev counter - Current socket- Voltmeter- (See key at end of wiring diagrams)

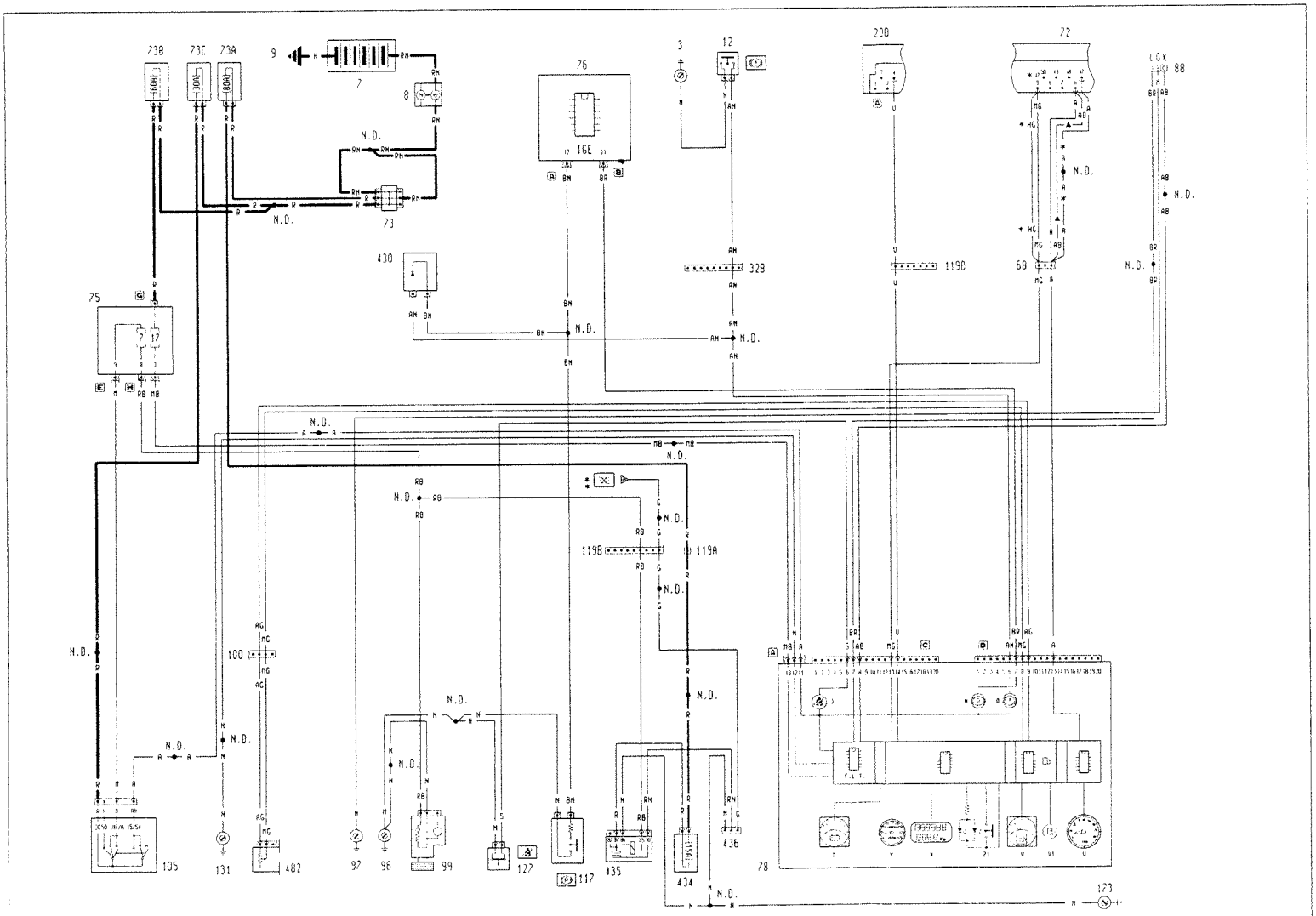

* Variant connections for the 2959 V6 24v version
** See ideogram lights wiring diagram
▲ Variant connections for the 1998 20v Turbo Version

P3U38IZ01

3U1371

Copyright by Fiat Auto

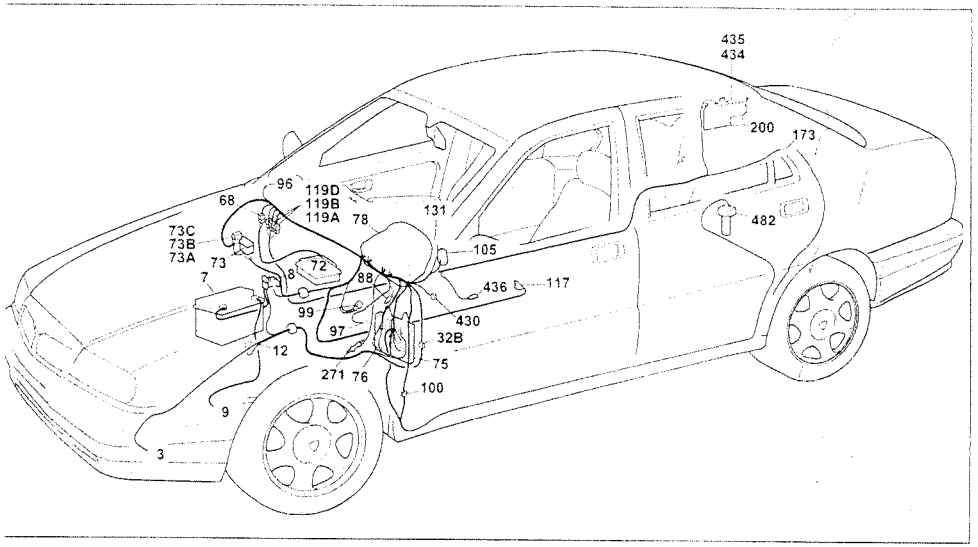

P3U139I01

Fuel gauge and reserve warning light - Handbrake warning light - Insufficient brake fluid level warning light - Seat belt unfastened warning light - Speedometer - Milometer/trip meter display and zeroing button - Rev counter - Current socket - Voltmeter

Components key

3 Left front earth
7 Battery
8 Main connector block
9 Earth on bodyshell
12 Insufficient brake fluid level sensor
26 Connection between dash. & left engine compartment cables
68 Connection between dashboard and electronic injection cables
72 Fuel injection control unit
73 Secondary connector block
73A 80A fuse protecting
73B 60A protective fuse for I.G.E. control unit / junction unit
73C 30A fuse protecting ignition switch/alarm device
75 Junction unit (dashboard)
76 I.G.E. control unit
78 Instrument panel
J Seat belts not fastened warning light
N Handbrake warning light / I.G.E. control unit
O Insufficient brake fluid level warning light
T Voltmeter
U Electronic rev counter
V Fuel gauge
V1 Fuel reserve warning light
X Milometer/trip meter
Y Electronic tachometer
Z1 Trip computer zeroing device

88 Diagnostic socket
96 Earth on carrier
97 Earth on floor
99 Cigar lighter
100 Connection between dashboard and left longitudinal cables
105 Ignition switch
117 Switch signalling handbrake applied
119A Connection between dashboard and right longitudinal cables
119B Connection between dashboard and right longitudinal cables
119D Connection between dashboard and right longitudinal cables
127 Switch signalling seat belts not fastened
131 Earth on steering column support
200 Controlled damping suspension electronic control unit (S.C.S)
430 Handbrake applied / insufficient brake fluid level connecting diode
434 15A fuse protecting current socket
435 Current socket relay feed
436 Current socket
482 Electric fuel pump / fuel gauge

N.D. Ultrasound welding taped in cable loom

100 Connection between dashboard and left longitudinal cables

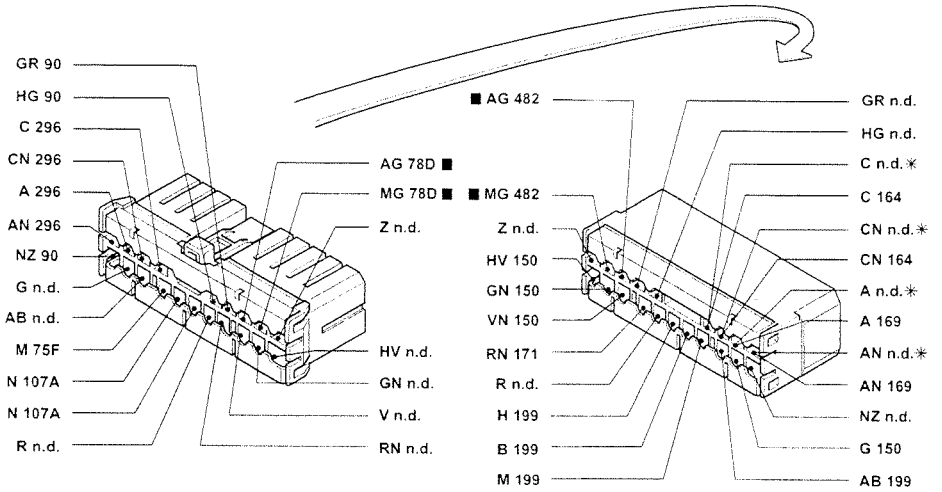

* Variant connection for Station Wagon versions

119B Connection between dashboard and right longitudinal cables

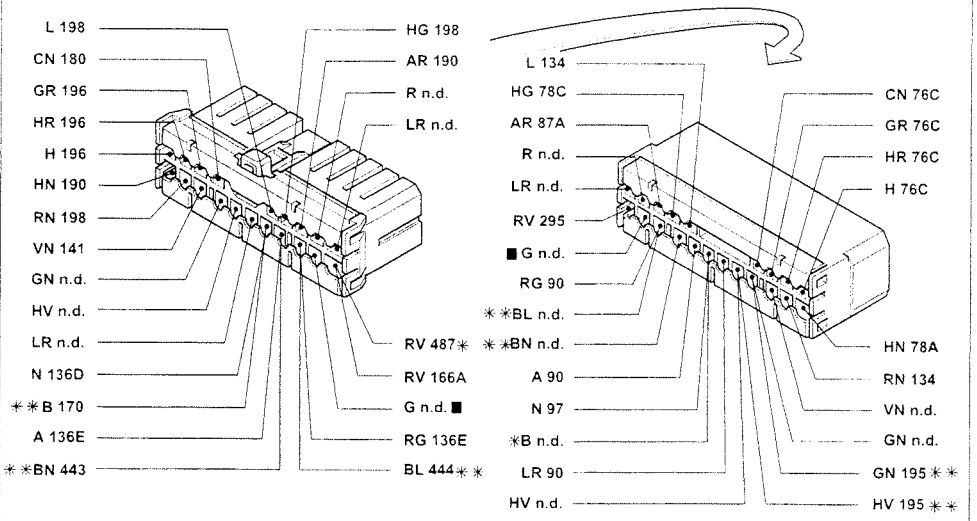

* Variant connection for Station Wagon versions

** Variant connection for COUPE' versions

■ The cables in the wiring diagram are marked

P3U140I01

Diesel versions

Fuel gauge and reserve warning light - Handbrake warning light - Insufficient brake fluid level warning light - Seat belt unfastened warning light - Speedometer - Milometer/trip meter and zeroing button - Rev counter - Current socket- Voltmeter- (See key at end of wiring diagrams)

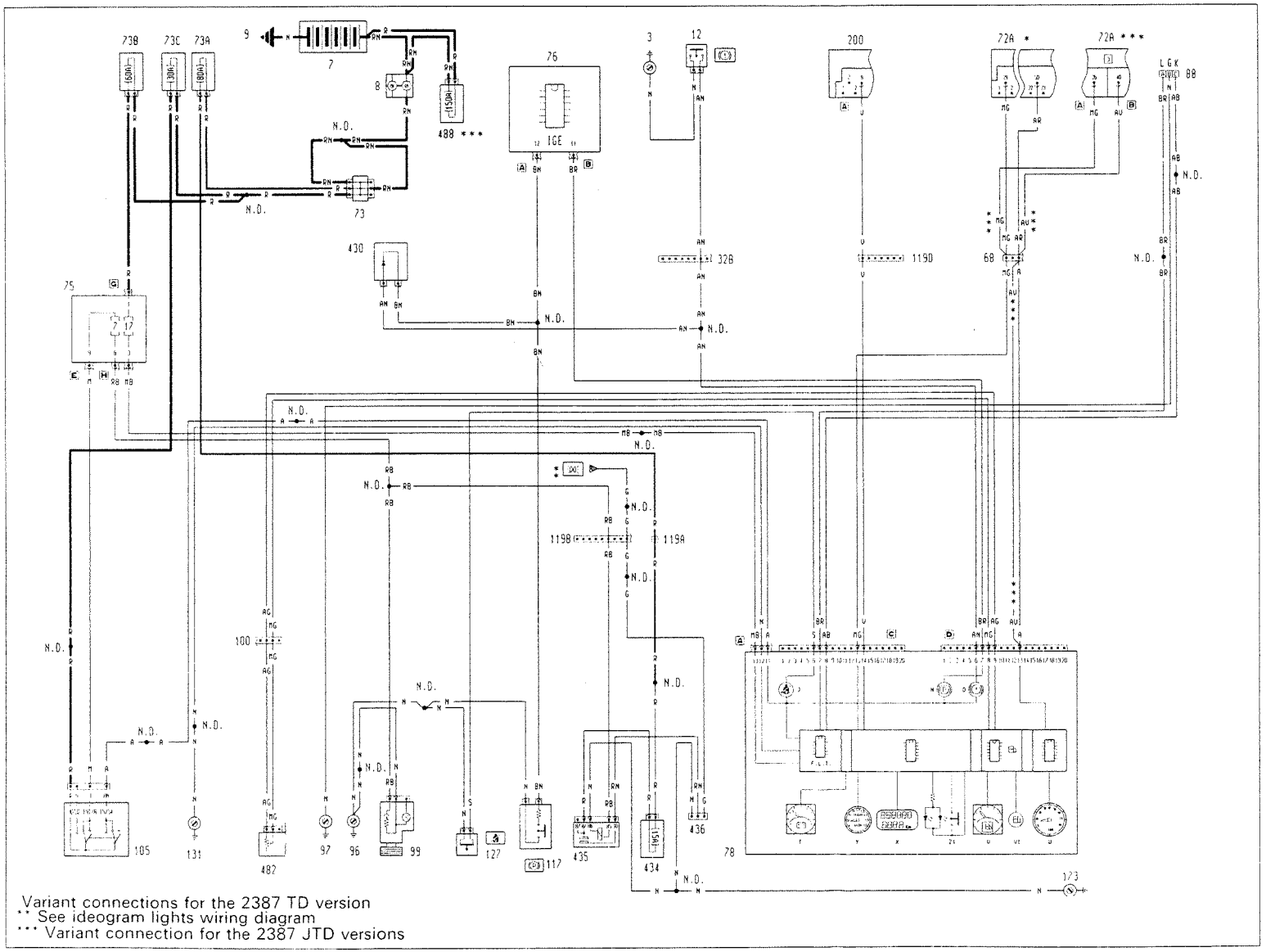

P3U391Z01

3U1411

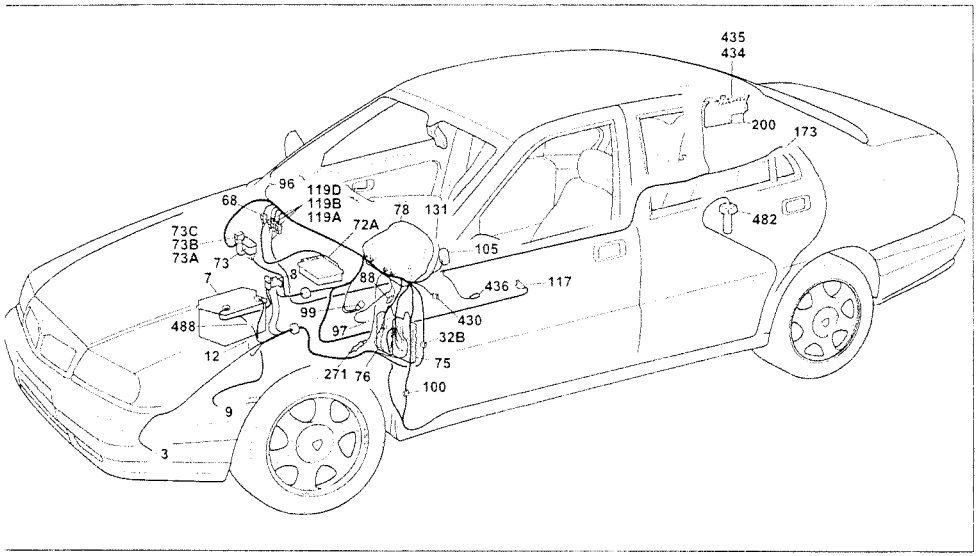

P3U143I01

Fuel level gauge and reserve warning light - Handbrake warning light - Insufficient brake fluid level warning light - Seat belt unfastened warning light - Speedometer - Milometer/trip meter and zeroing button - Rev counter - Current socket - Voltmeter

Components key

3 Left front earth
7 Battery
8 Main connector block
9 Earth on bodyshell
12 Insufficient brake fluid level sensor
32B Connection between dash. & left engine compartment cables
68 Connection between dashboard and electronic injection cables
72A Fuel pump control unit
73 Secondary connector block
73A 80A protective fuse
73B 60A protective fuse for I.G.E. control unit / junction unit
73C 30A fuse protecting ignition switch/alarm device

75 Junction unit (dashboard)
76 I.G.E. control unit
78 Instrument panel
J Seat belts not fastened warning light
N Handbrake warning light / I.G.E. control unit
O Insufficient brake fluid level warning light
T Voltmeter
U Electronic rev counter
V Fuel gauge
V1 Fuel reserve warning light
X Milometer/trip meter
Y Electronic tachometer
Z1 Trip computer zeroing button

88 Diagnostic socket
96 Earth on carrier
97 Earth on floor
99 Cigar lighter
100 Connection between dashboard and left longitudinal cables
105 Ignition switch
117 Switch signalling handbrake applied
119A Connection between dashboard and right longitudinal cables
119B Connection between dashboard and right longitudinal cables
119D Connection between dashboard and right front door cables
127 Switch signalling seat belts not fastened
131 Earth on steering column support
173 Right rear earth
200 Controlled damping suspension electronic control unit (S.C.S.)

430 Handbrake applied / insufficient brake fluid level connecting diode
434 15A fuse protecting current socket
435 Current socket relay feed
436 Current socket
482 Electric fuel pump / fuel gauge
488 150A maxi fuse

N.D. Ultrasound welding taped in cable loom

32B Connection between dashboard and left engine compartment cables

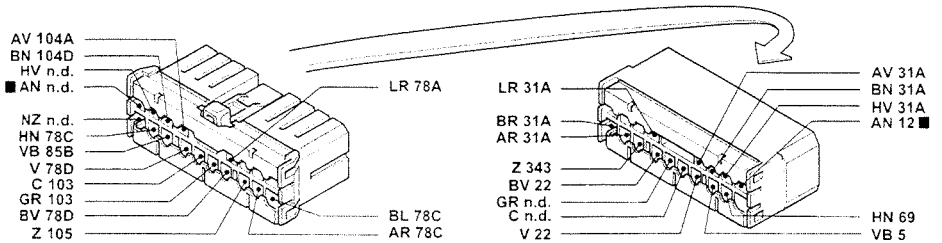

100 Connection between dashboard and left longitudinal cables

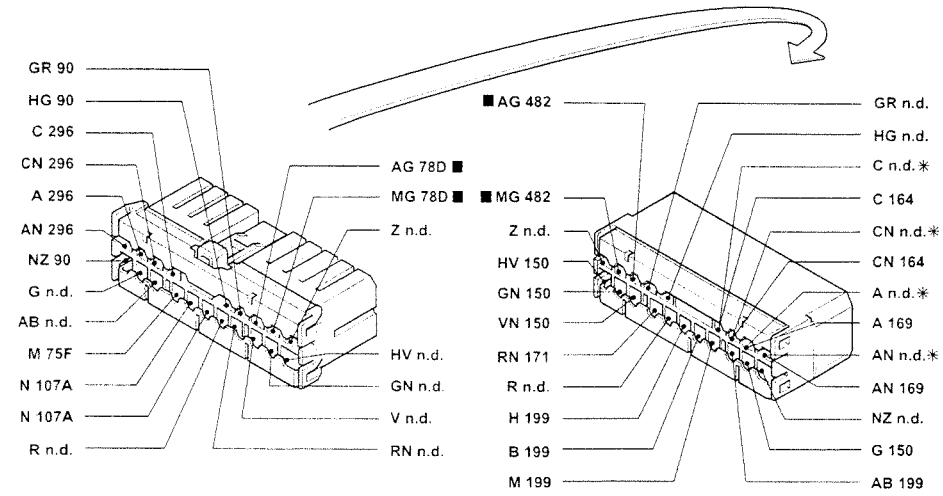

* Variant connection for Station Wagon versions

119D Connection between dashboard and right longitudinal cables

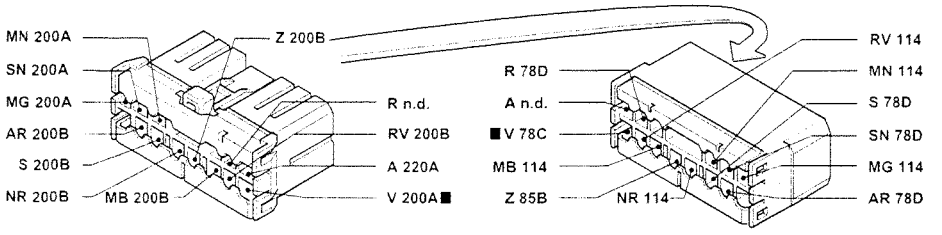

P3U144I01

■ The cables in the wiring diagram are marked

Electric front windows - (See key at end of wiring diagrams)

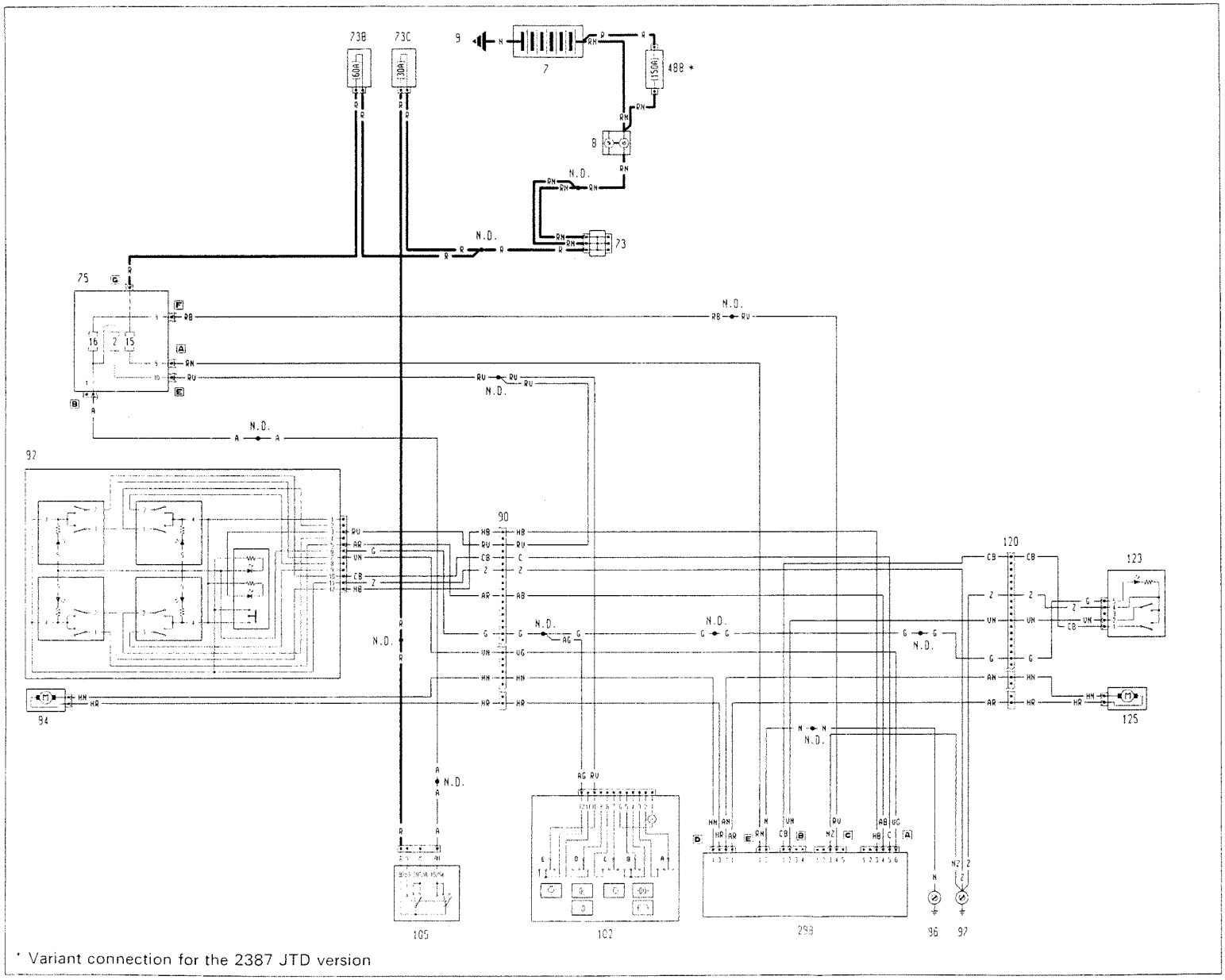

* Variant connection for the 2387 JTD version

P3U40IZ01

3U1451

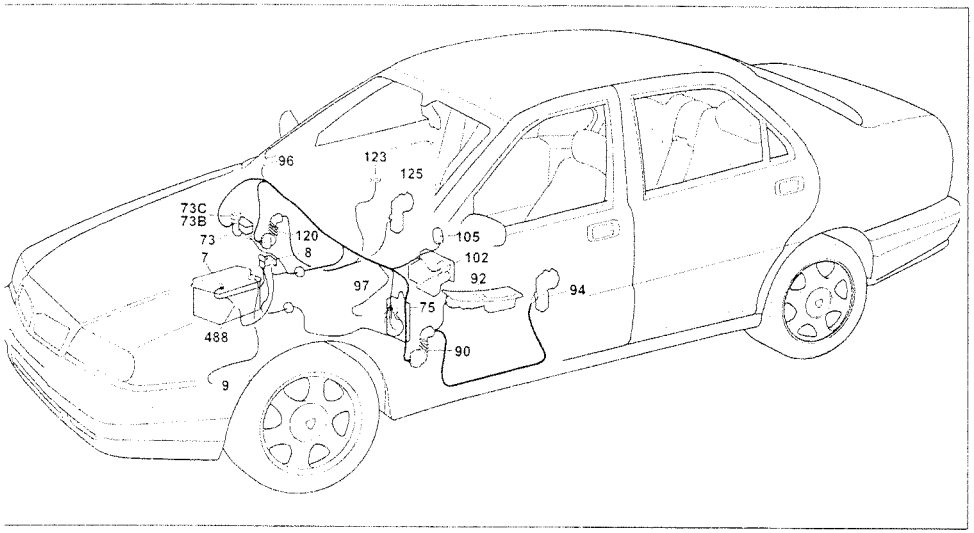

P3U147101

lectric front windows

:omponents key

7 Battery
8 Main connector block
9 Earth on bodyshell
73 Secondary connector block
3B 60A protective fuse for I.G.E. control unit / junction unit
3C 30A fuse protecting ignition switch/alarm device
75 Jonction unit (dashboard)
90 Connection between dashboard and left front door cables
92 Front / rear electric windows control panel on left front door
94 Left front electric window motor
96 Earth on carrier
97 Earth on floor
02 Exterior lights control unit
B Switch for side lights / number plate lights
C Control switch dipped beam headlamps / main beam headlamps
D Control switch for parking lights
E Ideogram lights control switch
05 Ignition switch
20 Connection between dashboard and right front door cables
23 Right front electric window control panel on left front door
25 Right front electric window motor
98 Electric front windows control unit
B8 150A maxi fuse

D Ultrasound welding taped in cable loom

90 Connection between dashboard and left front door cables

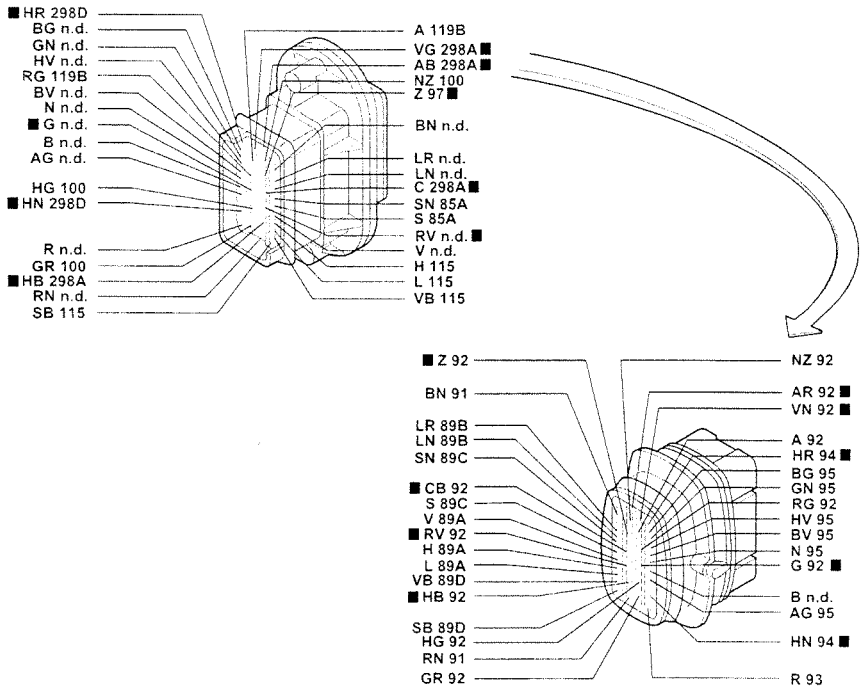

298A Electric front windows control unit

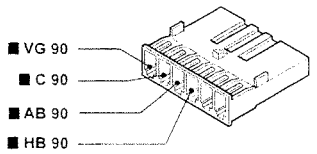

298D Electric front windows control unit

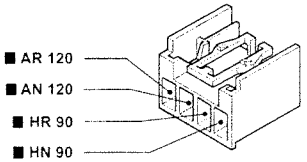

P3U148101

■ The cables in the wiring diagram are marked

Electric front windows - (See key at end of wiring diagrams)

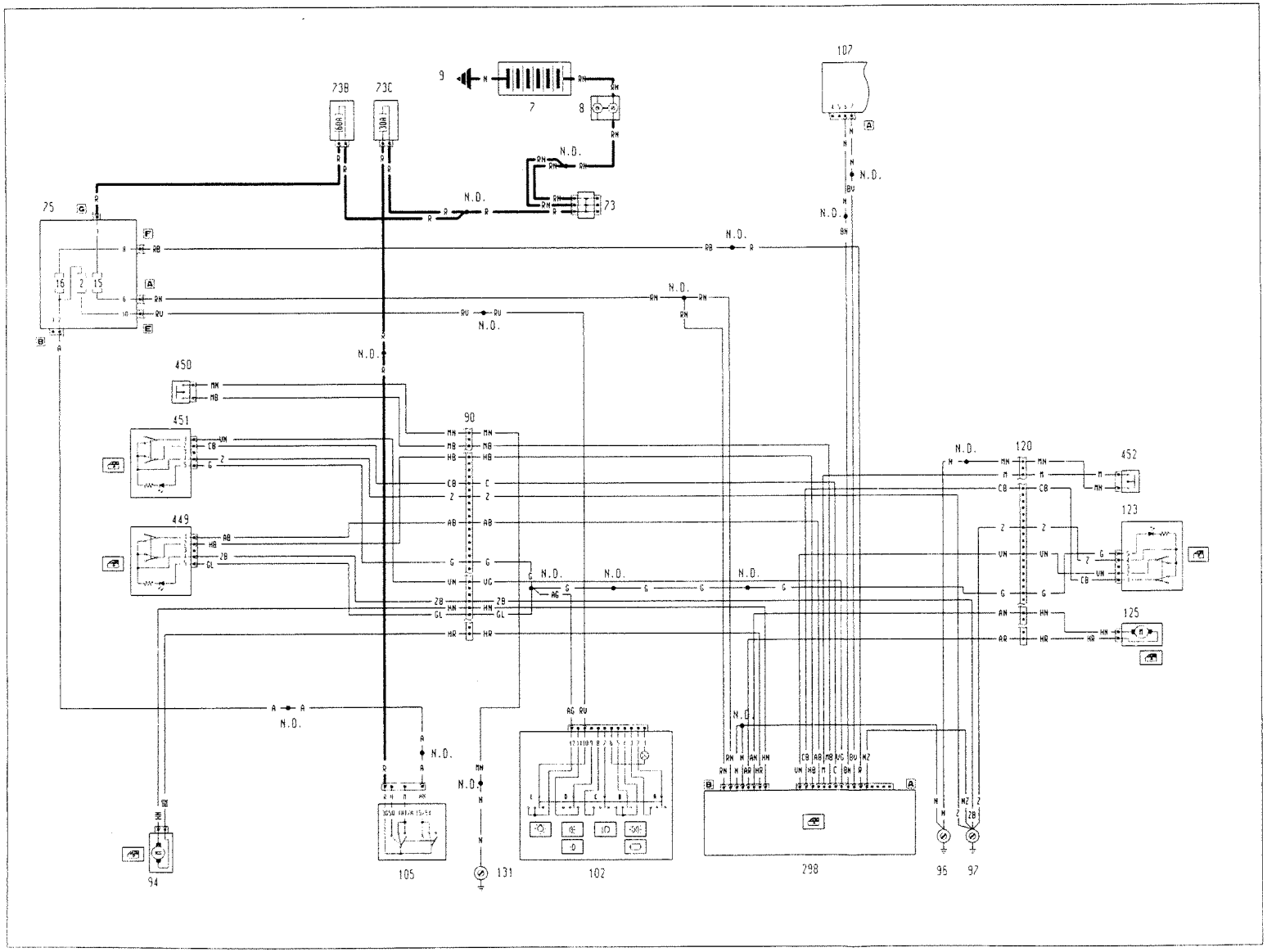

3U1491

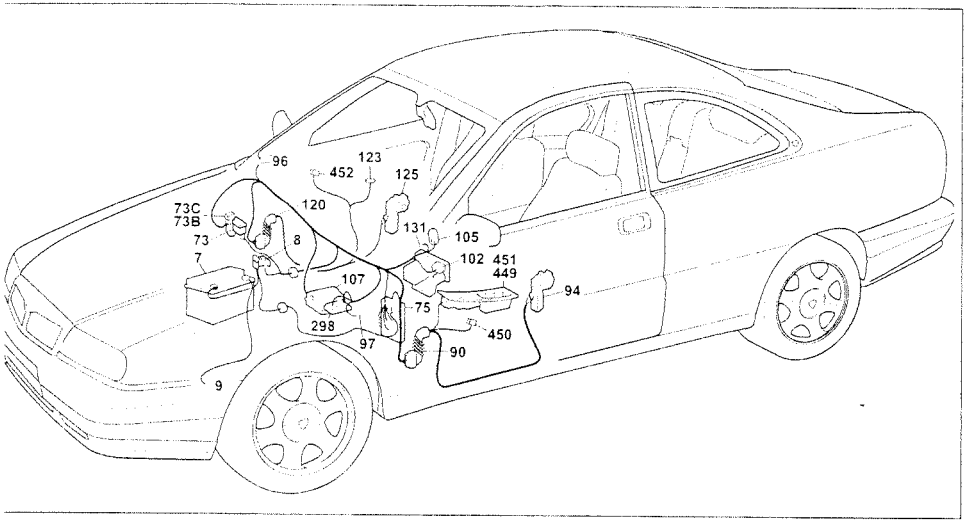

P3U151101

ectric front windows
ımponents key

7 Battery
8 Main connector block
9 Earth on bodyshell
73 Secondary connector block
3B 60A protective fuse for I.G.E. control unit / junction unit
3C 30A fuse protecting ignition switch / alarm device
75 Junction unit (dashboard)
90 Connection between dashboard and left front door cables
94 Left front electric window motor
96 Earth on carrier
97 Earth on floor
02 Exterior lights control unit
B Switch for side lights / number plate lights
C Control switch for dipped beam headlamps / main beam head-lamps
D Control switch for parking lights
E Ideogram lights control switch
05 Ignition switch
07 Control unit for anti-theft device
20 Connection between dashboard and right front door cables
23 Right electric control panel in right door
25 Right front electric window motor
31 Earth on steering column support
98 Electric front windows control unit
59 Left electric window control panel on left door
60 Micro-switch for electric windows in left window
61 Right electric window control panel in left door
62 Micro-switch for electric windows in right window

D. Ultrasound welding taped in cable loom

120 Connection between dashboard and right front door cables

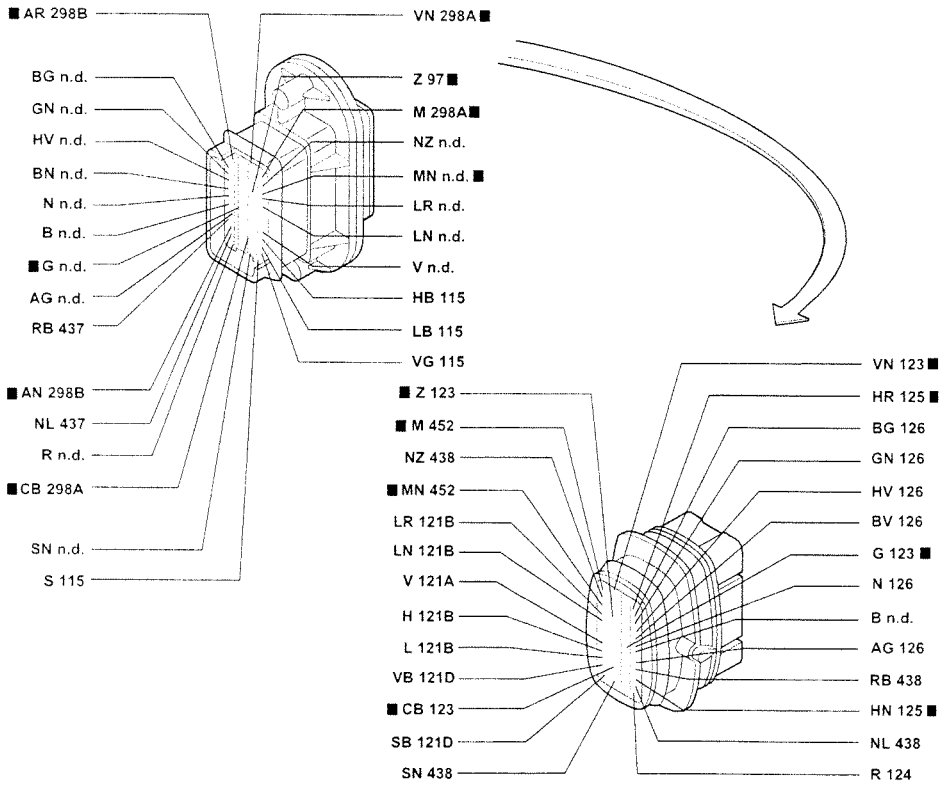

298A Electric front windows control unit

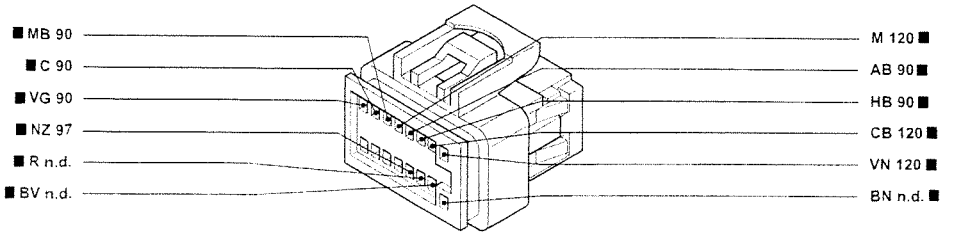

P3U152101

■ The cables in the wiring diagram are marked

Electric rear windows - (See key at end of wiring diagrams)

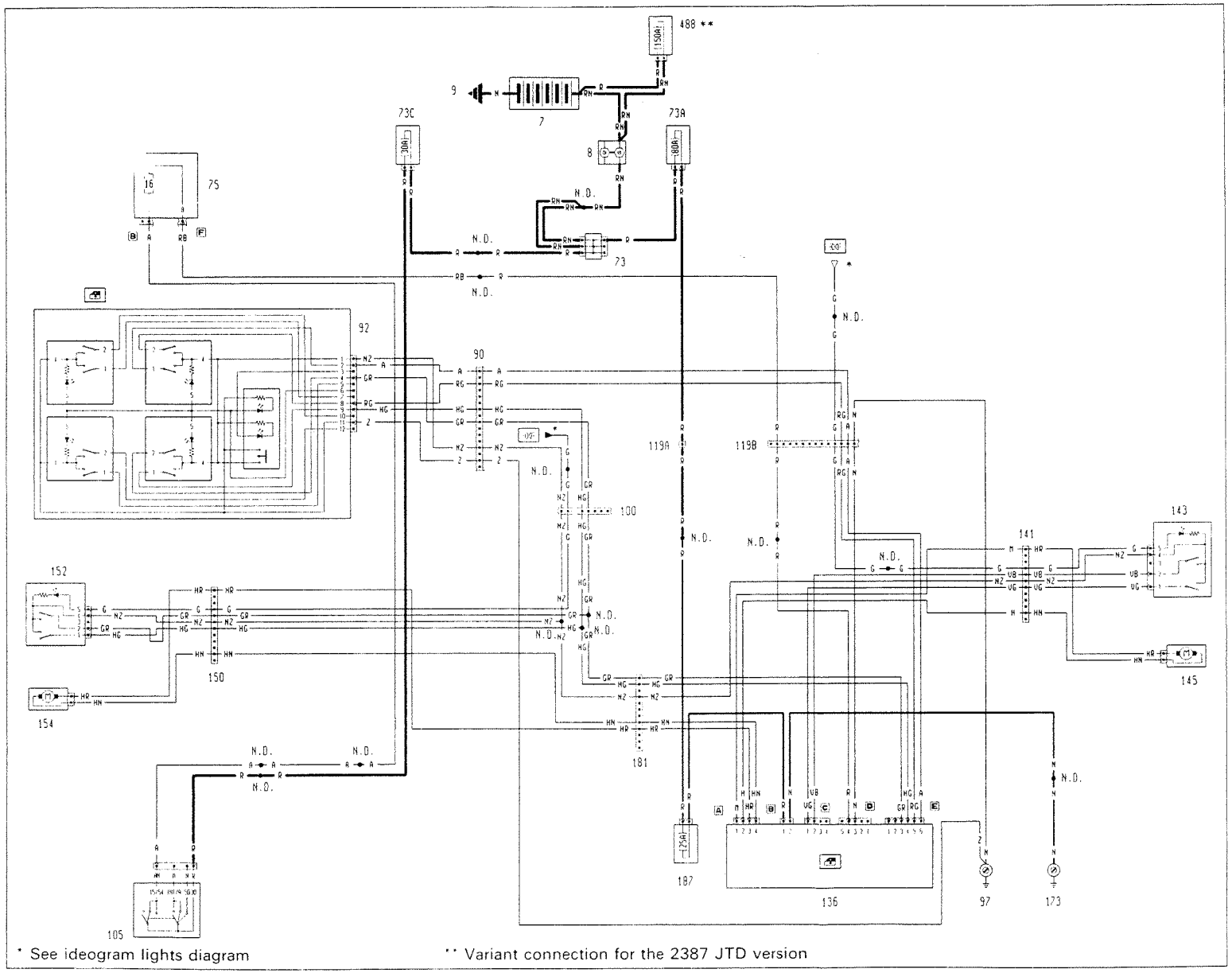

* See ideogram lights diagram

** Variant connection for the 2387 JTD version

P3U42IZ01

3U153)

Copyright by Fiat Auto

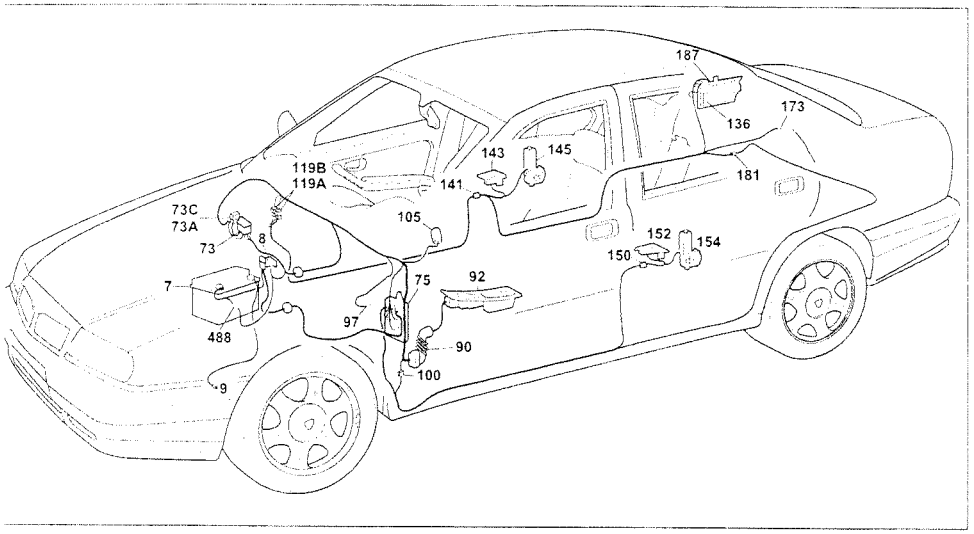

P3U155I01

lectric rear windows

:omponents key

7 Battery
8 Main connector block
9 Earth on bodyshell
73 Secondary connector block
73A 80A fuse protecting rear services
73C 30A fuse protecting ignition switch/alarm device
75 Junction unit (dashboard)
90 Connection between dashboard and left front door cables
92 Front / rear electric windows control panel in left front door
97 Earth on floor
100 Connection between dashboard and left longitudinal cables
105 Ignition switch
119A Connection between dashboard and right longitudinal cables
119B Connection between dashboard and right longitudinal cables
136 Rear electric windows control unit
141 Connection between right longitudinal and right rear door cables
143 Right rear electric window control in right rear door
145 Right rear electric window motor
150 Connection between left longitudinal and left rear door cables
152 Left rear electric window control in left rear door
154 Left rear electric window motor
173 Right rear earth
181 Connection between left longitudinal and right longitudinal cables
187 25A fuse protecting electric rear windows control unit
488 150A maxi fuse
N.D. Ultrasound welding taped in cable loom

90 Connection between dashboard and left front door cables

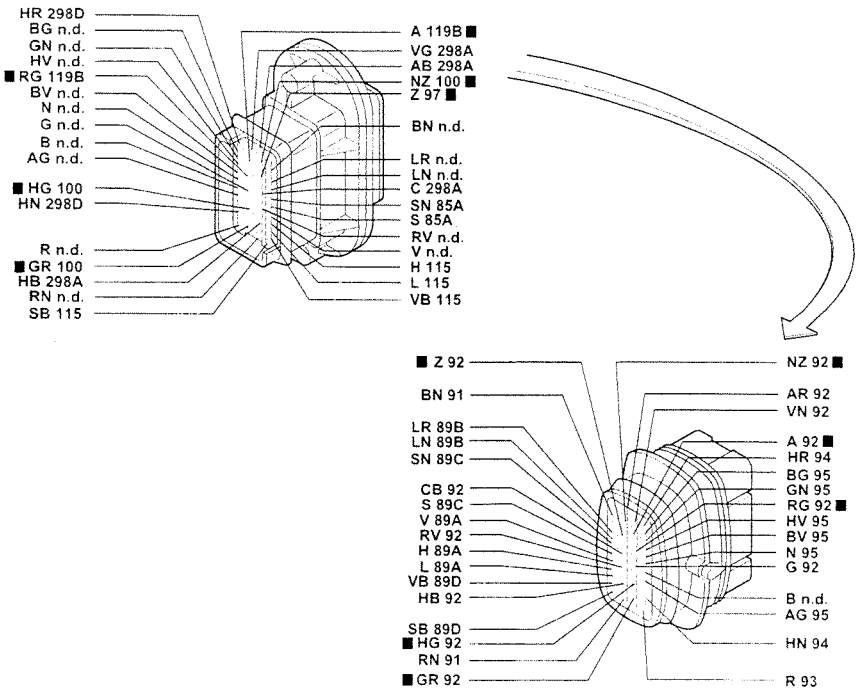

181 Connection between left longitudinal and right longitudinal cables

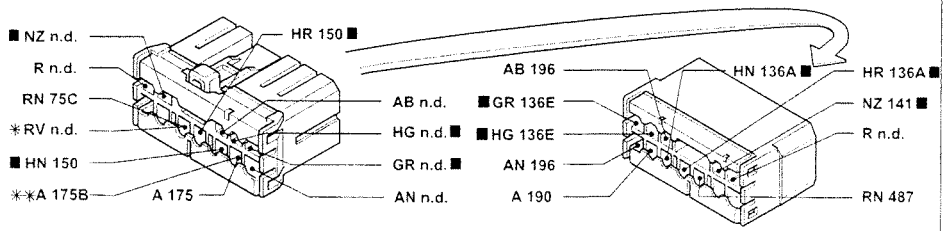

* Variant connection for versions with top of the range radio
** Variant connection for Station Wagon versions

■ The cables in the wiring diagram are marked

P3U156I01

Ideogram lights - Heated rear windscreen and warning light - (See key at end of wiring diagrams)

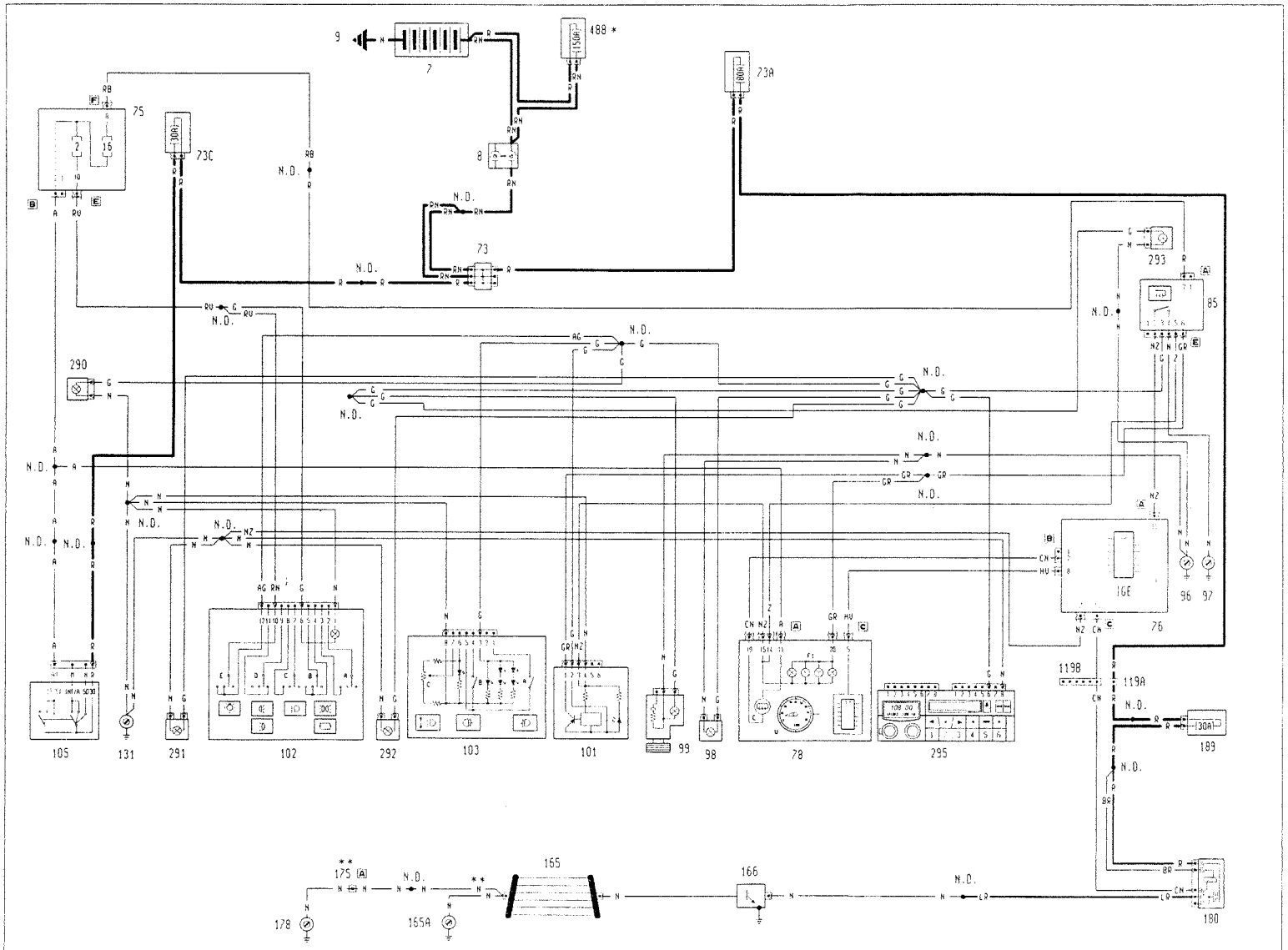

3U1571

P3U431Z01

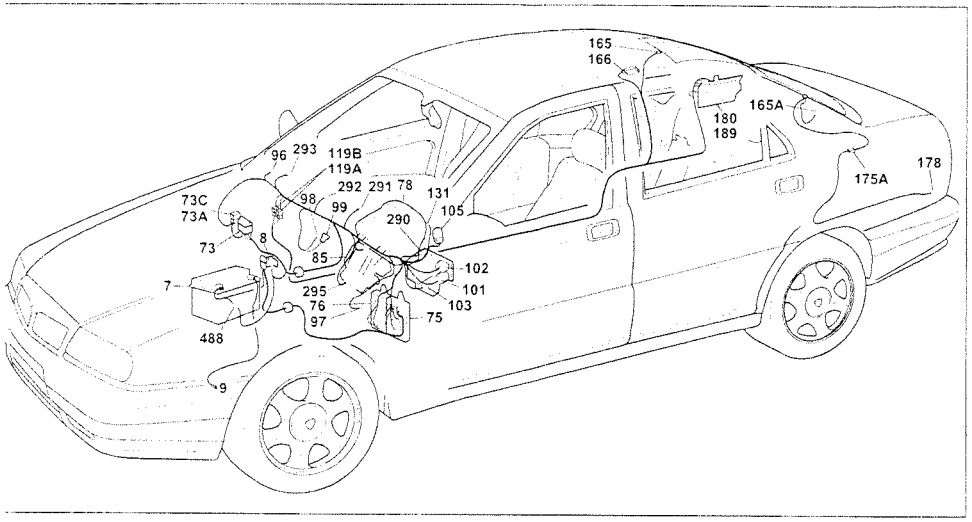

P3U159101

Ideogram lights - Heated rear windscreen and warning light

Components key

7 Battery
8 Main connector block
9 Earth on bodyshell
73 Secondary connector block
5A 80A fuse protecting rear services
8C 30A fuse protecting ignition switch/alarm device

75 Junction unit (dashboard)
76 I.G.E. control unit
78 Instrument panel
C Heated rear windscreen warning light
F1 Instrument panel light bulbs
U Electronic rev counter
85 Infocenter control unit
96 Earth on carrier
97 Earth on floor
98 Ashtray light
99 Cigar lighter
01 Light dimmer
02 Exterior lights control unit
B Switch for side lights / number plate lights
C Control switch for dipped beam headlamps / main beam head lamps
D Control switch for parking lights
E Ideogram lights control switch

103 Switch control unit
A Fog lights switch
B Rear fog lamps control switch
C Headlamp alignment control unit
105 Ignition switch
119A Connection between dashboard and right longitudinal cables
119B Connection between dashboard and right longitudinal cables
131 Earth on steering column support
165 Heated rear windscreen
165A Earth for heated rear windscreen
166 Amplifier for aerial in rearscreen
175 Connection between left longitudinal and tailgate cables
178 Left rear earth
180 Heated rear windscreen relay feed
189 30A fuse protecting heated rear windscreen
290 Left front air vent controls light
291 Left centre air vent controls light
292 Right centre air vent controls light
293 Right front air vent controls light
295 Radio cables connection
488 150A maxi fuse

N.D Ultrasound welding taped in cable loom

119A Connection between dashboard and right longitudinal cables

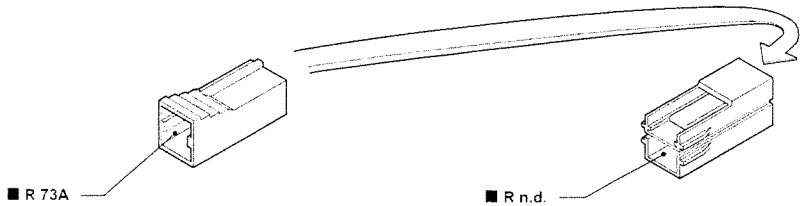

119B Connection between dashboard and right longitudinal cables

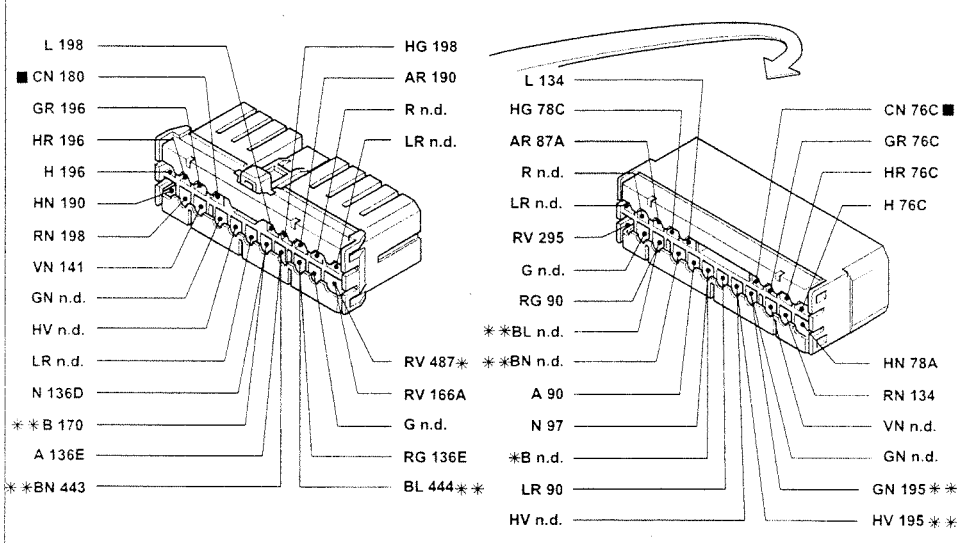

* Variant connection for Station Wagon versions
** Variant connection for COUPE' versions

175 Connection between left longitudinal and tailgate cables (Only for Station Wagon versions)

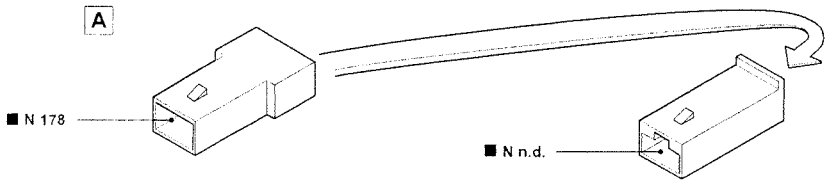

P3U160101

■ The cables in the wiring diagram are marked

Electrically adjustable, heated, folding external rear view mirrors - Electro-chromic interior rear view mirror - (See key at end of wiring diagrams)

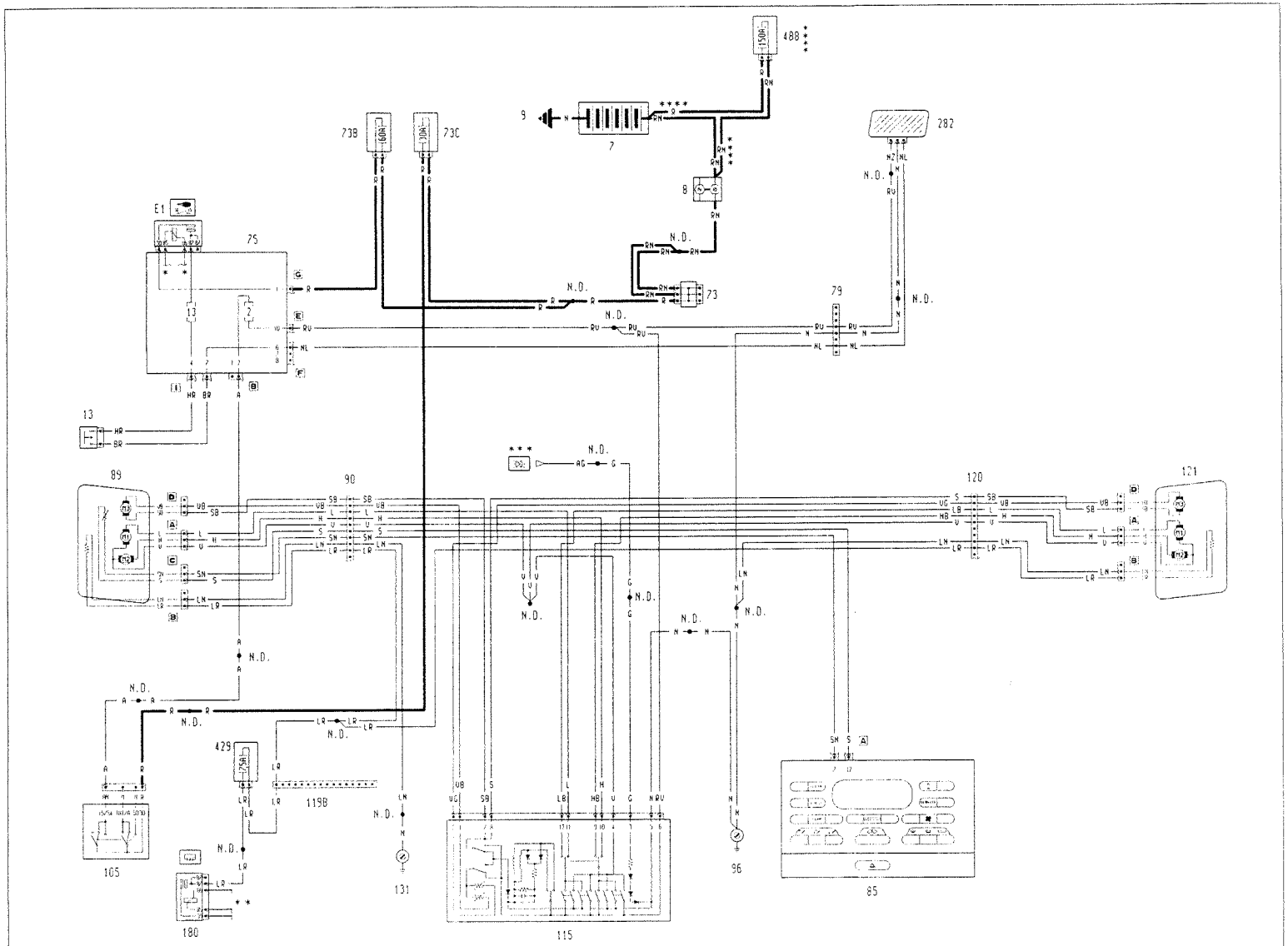

* See starting wiring diagram
** See heated rear windscreen diagram
*** See ideogram lights wiring diagram
**** Variant connection for the 2387 JTD version

P3U441Z01

3U1671

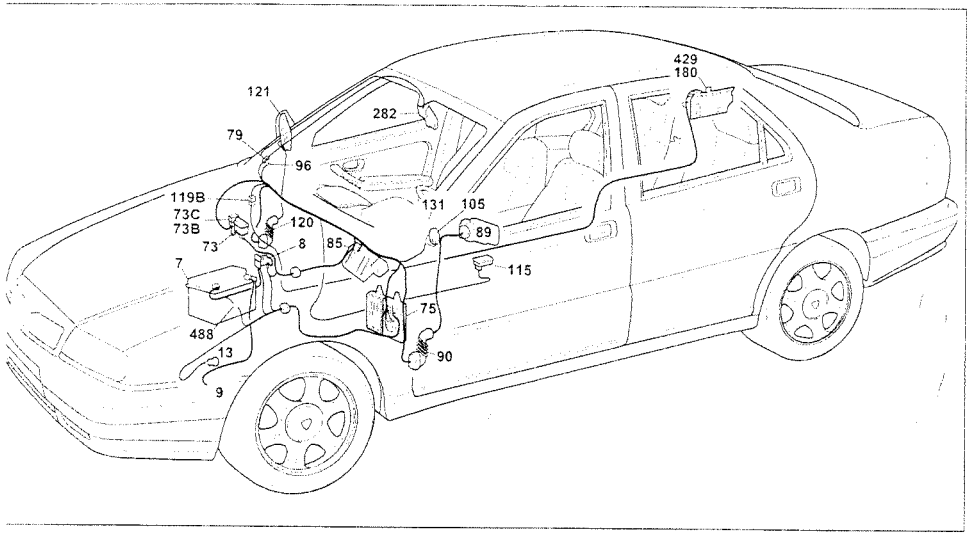

P3U163I01

ectrically adjustable, heated, folding external rear view mirrors - Electro-chromic interior rear view mirror

)mponents key

7 Battery
8 Main connector block
9 Earth on bodyshell
13 Reversing lights switch
13 Secondary connector block
A 80A fuse protecting rear services
B 60A protective fuse for I G E control unit / junction unit
C 30A fuse protecting ignition switch/alarm device

15 Junction unit (dashboard)
F1 Ignition discharge relay
79 Connection between dashboard and courtesy light cables
85 Infocenter control unit
89 Left rear view mirror
A Motor for folding left rear view mirror
B Motor for vertical adjustment of left rear view mirror
C Motor for horizontal adjustment of left rear view mirror
D Left rear view mirror heating resistance
E Outside temperature sensor

90 Connection between dashboard and left front door cables
96 Earth on carrier
105 Ignition switch
115 Electrically adjustable rear view mirrors control unit
119B Connection between dashboard and right longitudinal cables
120 Connection between dashboard and right front door cables
121 Right rear view mirror
A Motor for folding right rear view mirror
B Motor for vertical adjustment of right rear view mirror
C Motor for horizontal adjustment of right rear view mirror
D Right rear view mirror heating resistance
131 Earth on steering column support
180 Heated rear windscreen relay feed
282 Electro-chromic interior rear view mirror
429 7.5A fuse protecting heated rear view mirrors
488 150A maxi fuse

N.D Ultrasound welding taped in cable loom

79 Connection between dashboard and courtesy light cables

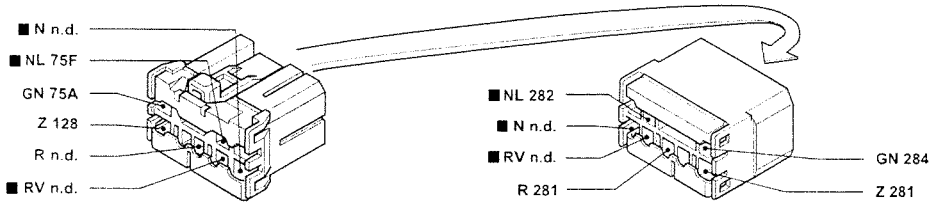

90 Connection between dashboard and left front door cables

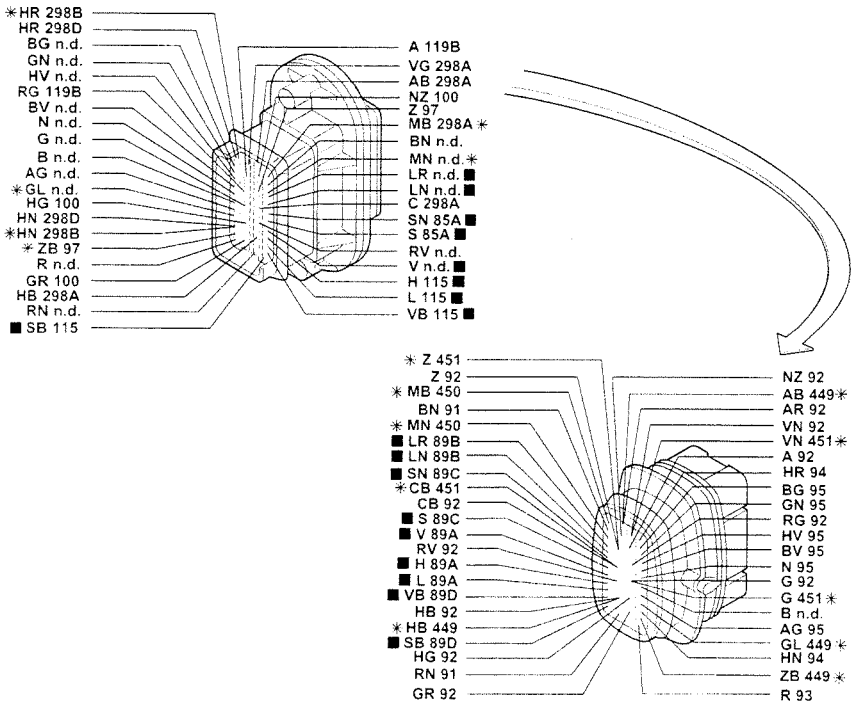

' Variant connection for COUPE' versions

■ The cables in the wiring diagram are marked

P3U164I01

Air Bag and failure warning light - Seat belt pretensioners - Servotronic device - (See key at end of wiring diagrams)

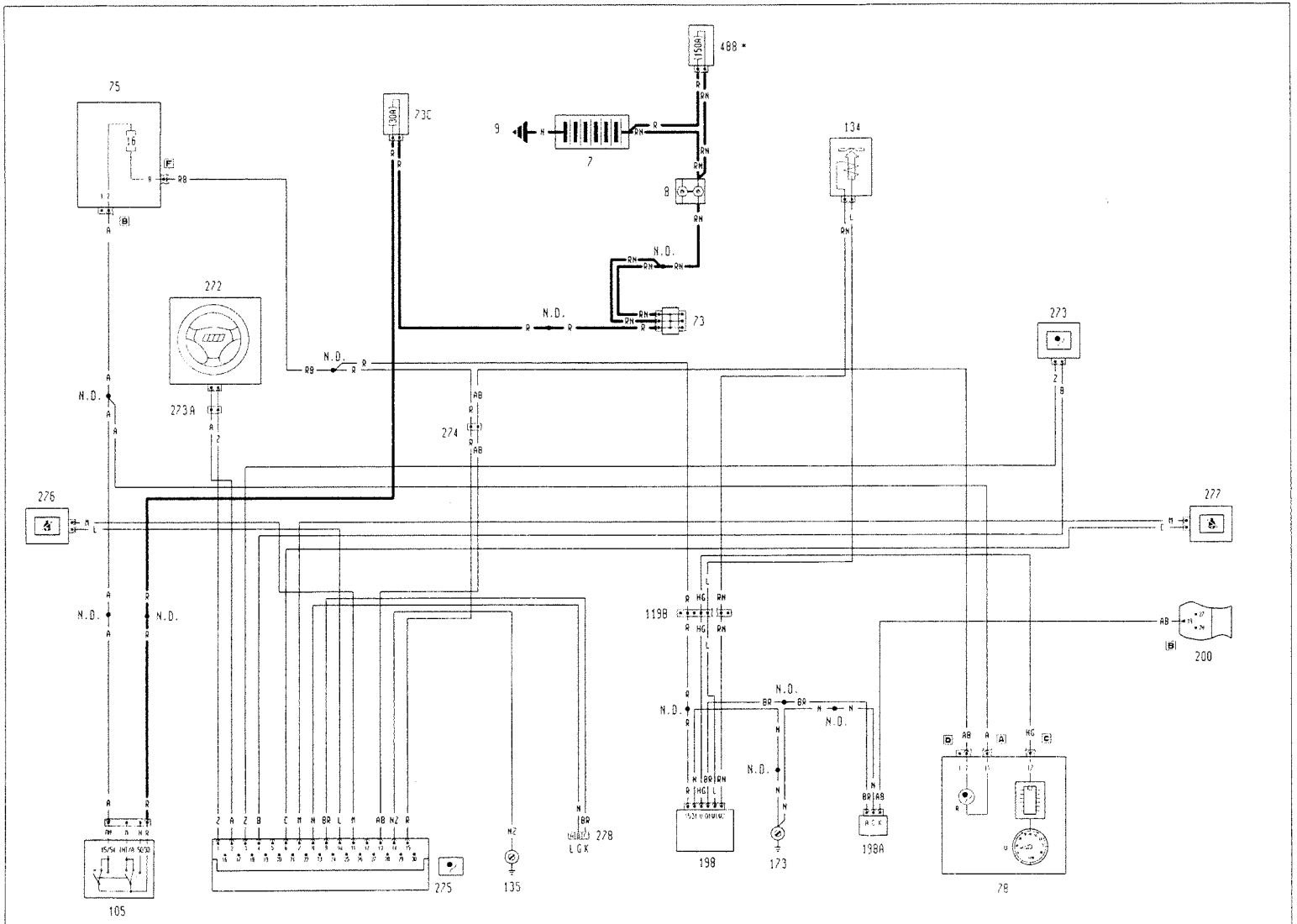

* Variant connection for the 2387 JTD version

P3U451Z01

3U165I

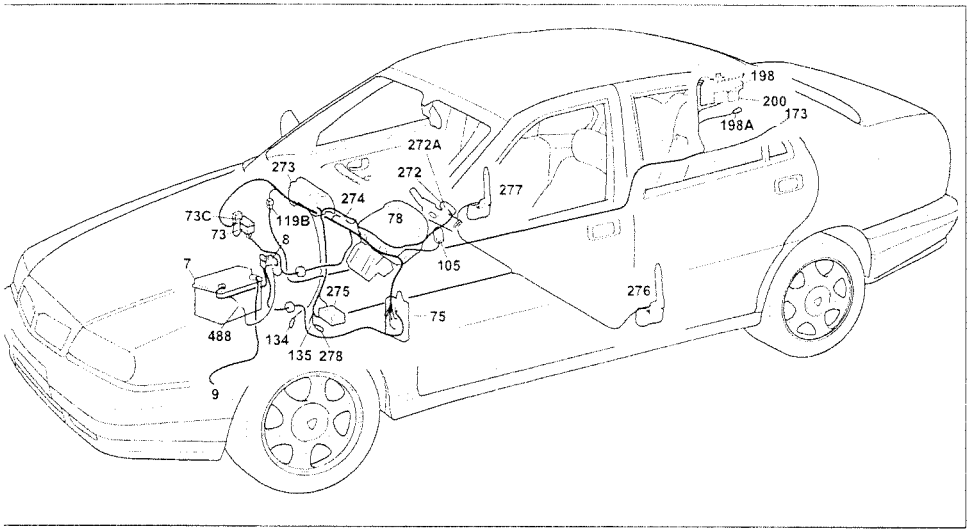

P3U167I01

Air Bag and failure warning light - Seat belt pretensioners - Servotronic device

Components key

7 Battery
8 Main connector block
9 Earth on bodyshell
73 Secondary connector block
73C 30A fuse protecting ignition switch/alarm device
75 Junction unit (dashboard)
78 Instrument panel
R AIR-BAG failure warning light
U Electronic rev counter
105 Ignition switch
119B Connection between dashboard and right longitudinal cables
134 Servotronic solenoid valve
135 Earth on floor (AIR-BAG signal)
173 Right rear earth
198 Servotronic electronic control unit
198A Diagnostic socket
200 Controlled damping suspension electronic control unit (S.C.S.)

272 Driver's AIR-BAG connection
273 Passenger AIR-BAG connection
273A Connector for clock spring
274 Connection between dashboard and AIR-BAG cables
275 AIR-BAG control unit
276 Left seat belt pretensioner
277 Right seat belt pretensioner
278 Diagnostic socket for AIR-BAG
488 150A maxi fuse

N.D. Ultrasound welding taped in cable loom

119B Connection between dashboard and right longitudinal cables

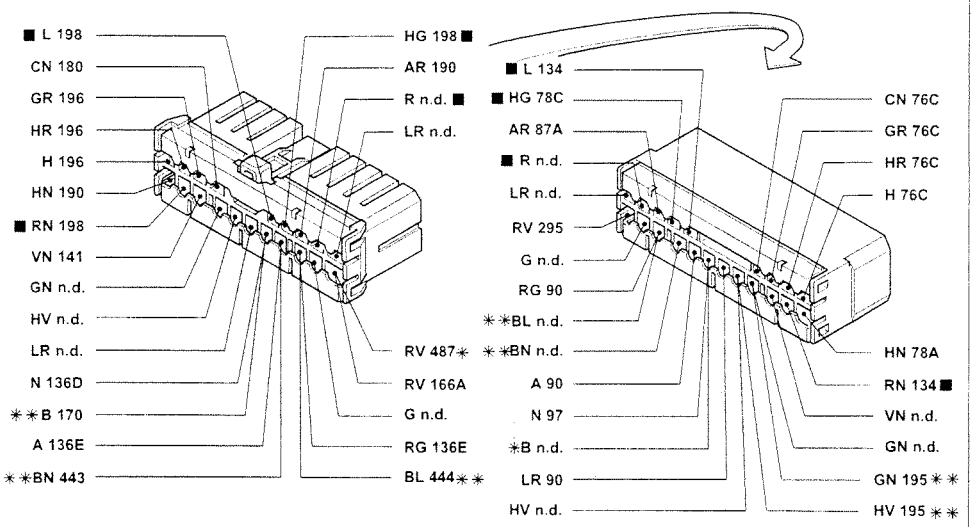

* Variant connection for Station Wagon versions

** Variant connection for COUPE' versions

273A Passenger AIR-BAG connection

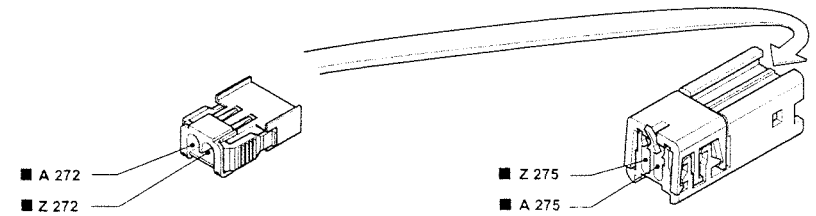

274 Connection between dashboard and AIR-BAG cables

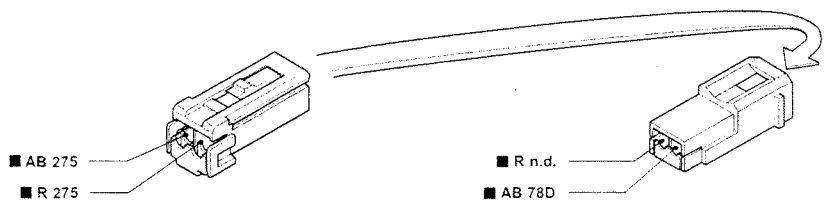

P3U168I01

■ The cables in the wiring diagram are marked

Version with alarm
Central locking and signalling doors open - (See key at end of wiring diagrams)

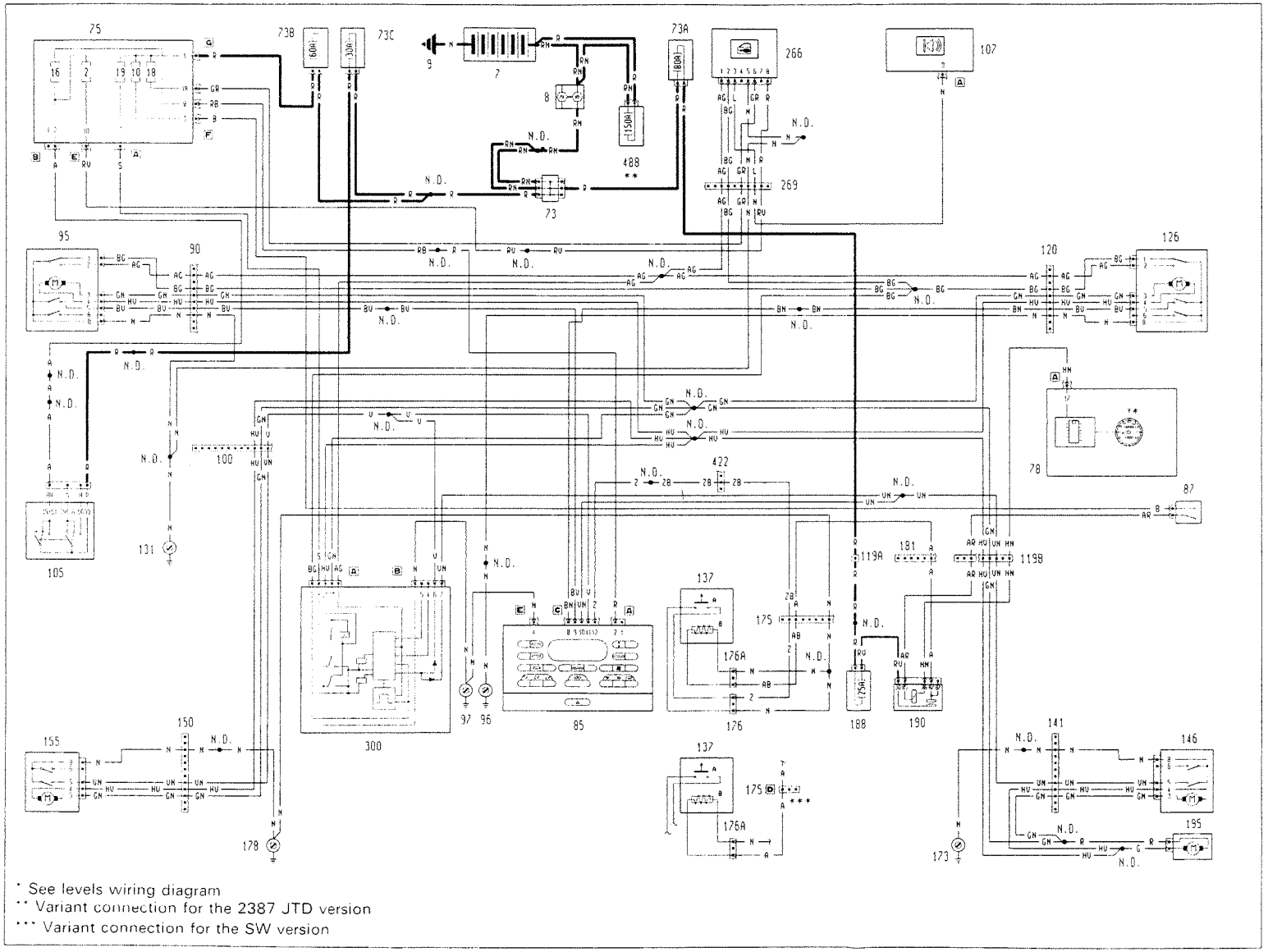

3U169I

P3U461Z01

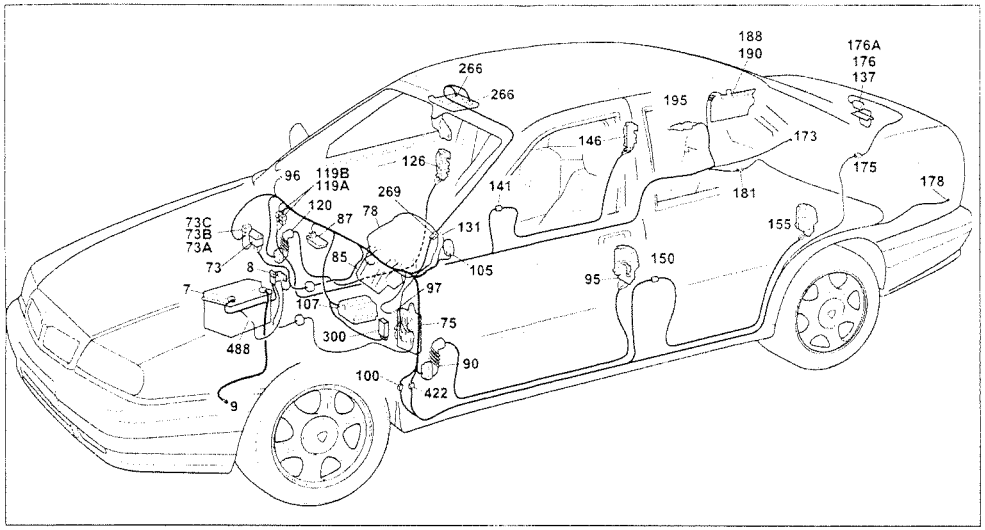

P3U171I01

Version with alarm
Central locking and signalling doors open

Components key

7 Battery
8 Main connector block
9 Earth on bodyshell
73 Secondary connector block
73A 80A fuse protecting rear services
73B 60A protective fuse for I.G.E. control unit / junction unit
73C 30A fuse protecting ignition switch/alarm device
75 Junction unit (dashboard)
78 Instrument panel
Y Electronic tachometer
85 Infocenter control unit
87 Light for glove compartment / controls for unlocking luggage comp.
90 Connection between dashboard and left front door cables
95 Left front central locking geared motor and signalling left front door open and alarm on
96 Earth on carrier
97 Earth on floor
100 Connection between dashboard and left longitudinal cables
105 Ignition switch
107 Alarm control unit
119A Connection between dashboard and right longitudinal cables
119B Connection between dashboard and right longitudinal cables
120 Connection between dashboard and right front door cables
126 Right front central locking geared motor and signalling right front door open and alarm on
131 Earth on steering column support
137 Tailgate lock assembly
A Luggage compartment courtesy light switch and alarm on
B Tailgate locking/unlocking motor
141 Connection between right longitudinal and right rear door cables
146 Right rear door central locking geared motor and signalling right rear door open and alarm on
150 Connection between left longitudinal and left rear door cables
155 Left rear door central locking geared motor and signalling left rear door open and alarm on
173 Right rear earth
175 Connection between left longitudinal and tailgate cables
176 Tailgate cables connection
178 Left rear earth
181 Connection between left longitudinal and right longitudinal cables
188 25A fuse protecting boot release electro-magnet
190 Luggage compartment tailgate locking/unlocking relay
195 Fuel filler flap release motor
266 Infra red receiver for alarm device
269 Connection between dashboard and receiver cables
300 Central locking electronic control unit
422 Connection between dashboard and left longitudinal cables
488 150A maxi fuse

N.D. Ultrasound welding taped in cable loom

90 Connection between dashboard and left front door cables

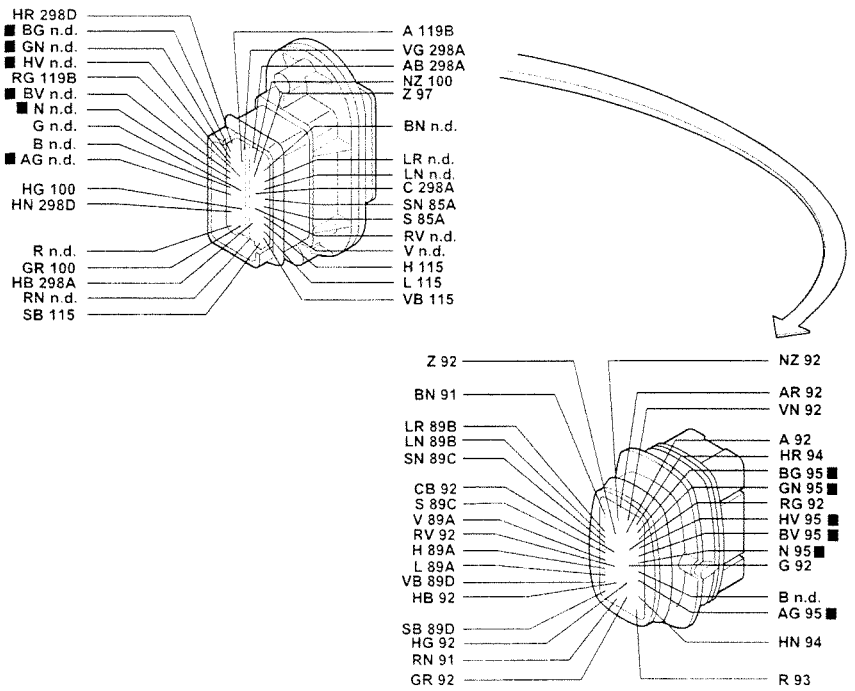

181 Connection between left longitudinal and right longitudinal cables

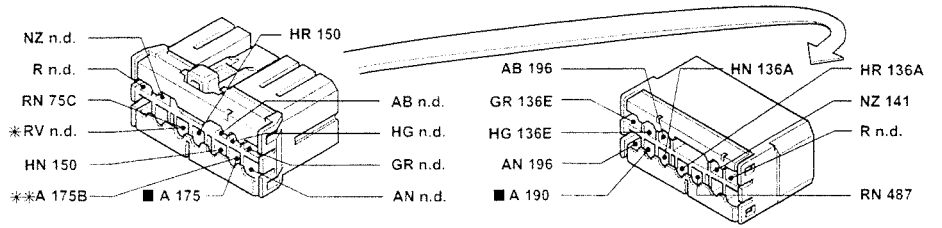

' Variant connection for versions with top of the range radio
'' Variant connection for Station Wagon versions

P3U172I01

■ The cables in the wiring diagram are marked

Version with alarm
Central locking and signalling doors open - (See key at end of wiring diagrams)

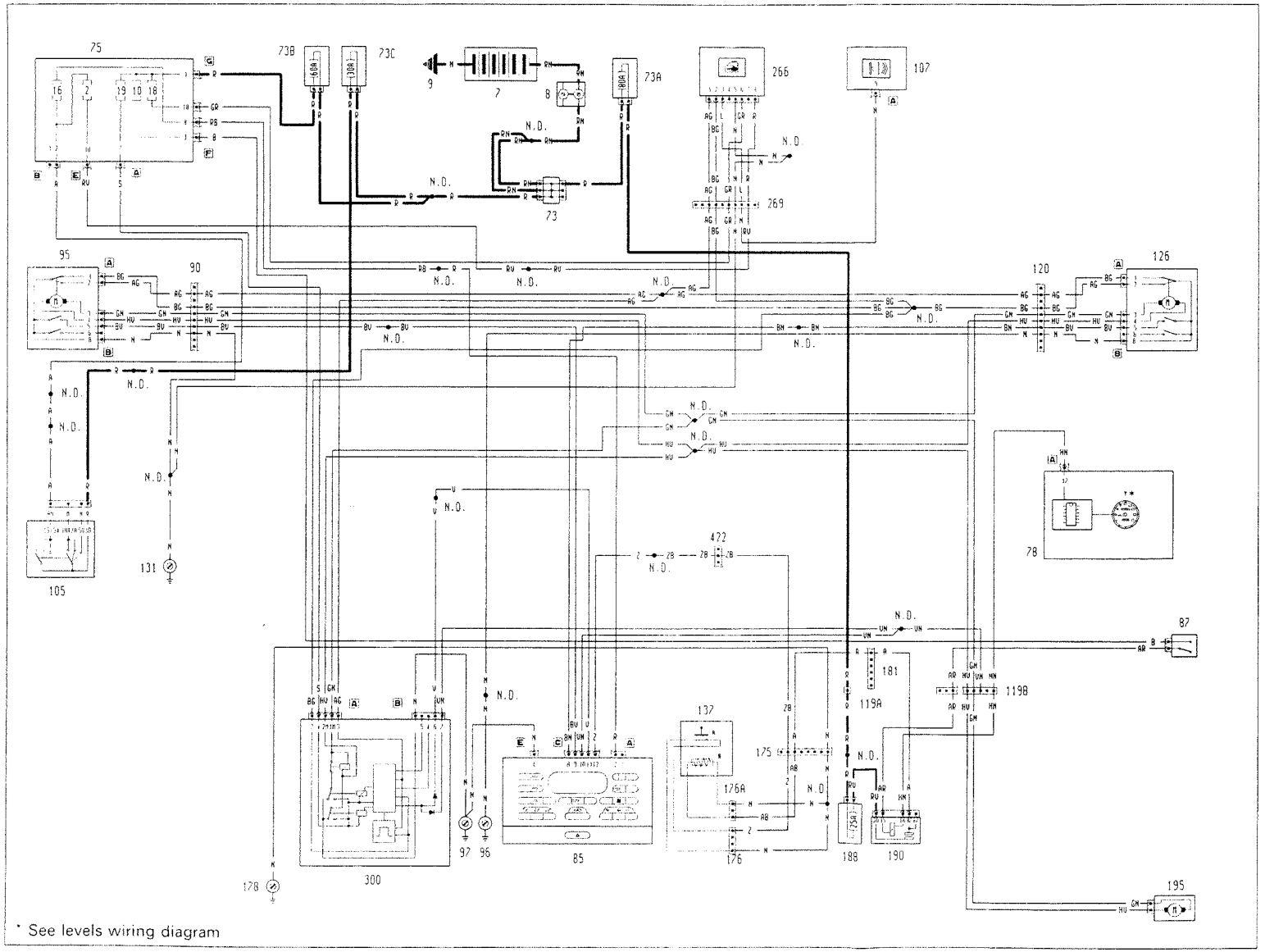

P3U47IZ01

3U1731

Copyright by Fiat Auto

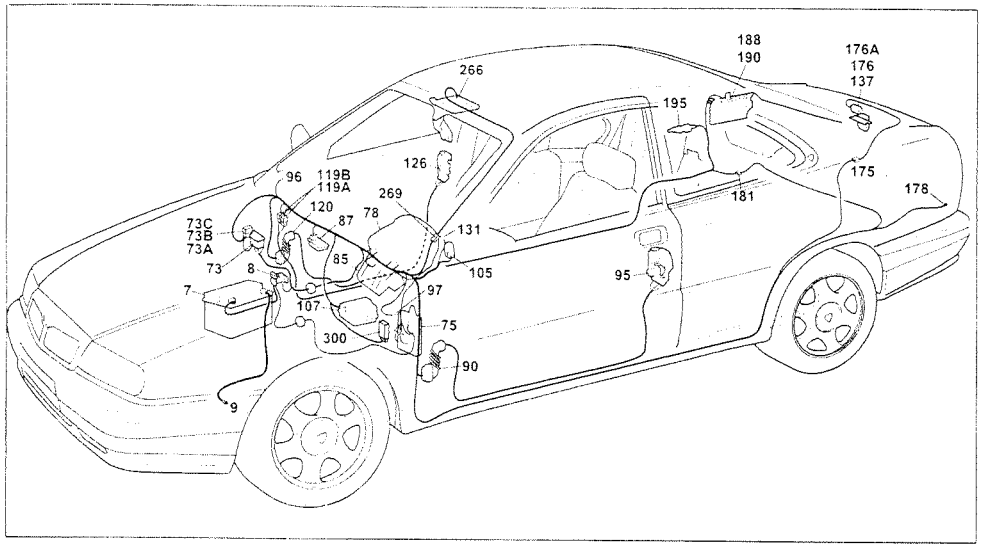

P3U175I01

Version with alarm
Central locking and signalling doors open

Components key

7 Battery
8 Main connector block
9 Earth on bodyshell
73 Secondary connector block
73A 80A fuse protecting rear services
73B 60A protective fuse for I.G.E. control unit / junction unit
73C 30A fuse protecting ignition switch/alarm device
75 Junction unit (dashboard)
E2 Intermittent device for direction ind. / hazard w/lights
78 Instrument panel
Y Electronic tachometer
85 Infocenter control unit
87 Light for glove compartment / controls for unlocking luggage compartment
90 Connection between dashboard and left front door cables
95 Left front central locking geared motor and signalling left front door open and alarm on
96 Earth on carrier
97 Earth on floor
105 Ignition switch
107 Alarm control unit
108 Immobilizer control unit
119A Connection between dashboard and right longitudinal cables
119B Connection between dashboard and right longitudinal cables
120 Connection between dashboard and right front door cables
126 Right front central locking geared motor and signalling right front door open and alarm on
131 Earth on steering column support
137 Tailgate lock assembly
A Luggage compartment courtesy light switch and alarm on
B Motor for locking / unlocking luggage compartment tailgate
173 Right rear earth
175 Connection between left longitudinal and tailgate cables
176 Tailgate cables connection
178 Left rear earth
181 Connection between left longitudinal and right longitudinal cables
188 25A fuse protecting boot release electro-magnet
190 Relay for locking / unlocking luggage compartment tailgate
195 Fuel filler flap release motor
266 Infra red receiver for alarm device
269 Connection between dashboard and receiver cables
297 Anti-theft device warning light
300 Central locking electronic control unit
422 Connection between dashboard and left longitudinal cables
431 Direction indicators control device when doors are locked

N.D. Ultrasound welding taped in cable loom

120 Connection between dashboard and right front door cables

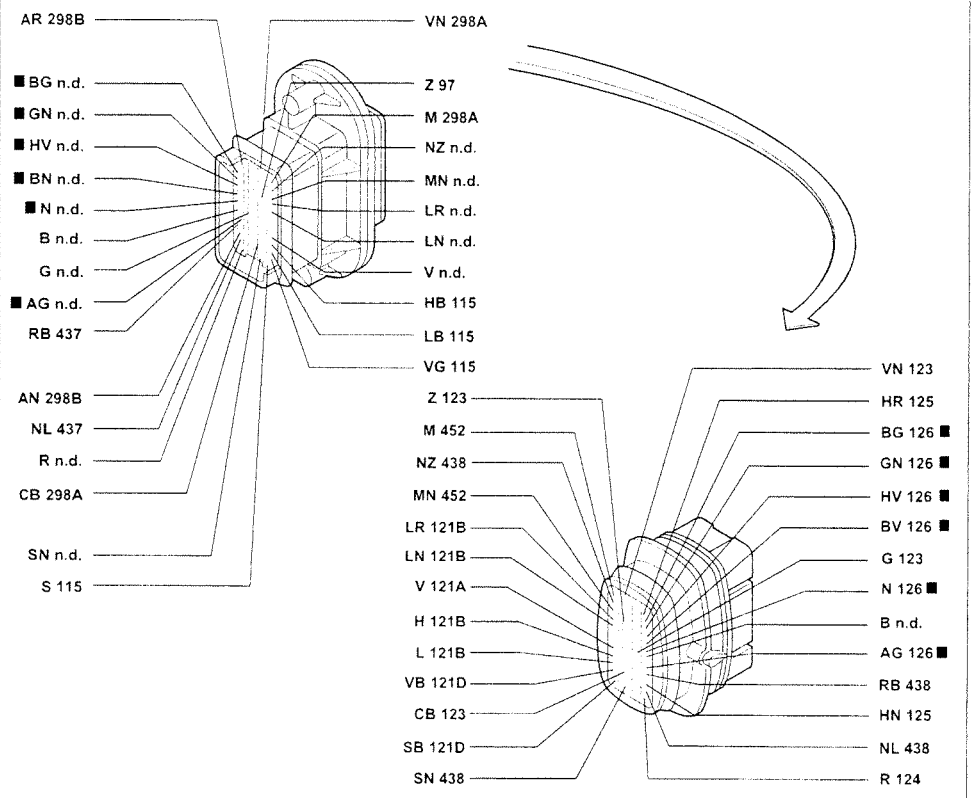

422 Connection between dashboard and left longitudinal cables (Only for COUPE' versions)

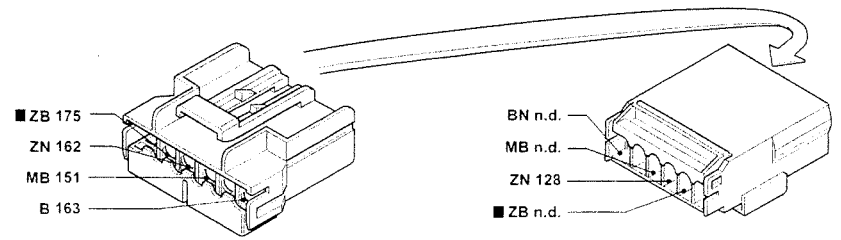

P3U176I01

■ The cables in the wiring diagram are marked

Version without alarm
Central locking and signalling doors open - (See key at end of wiring diagrams)

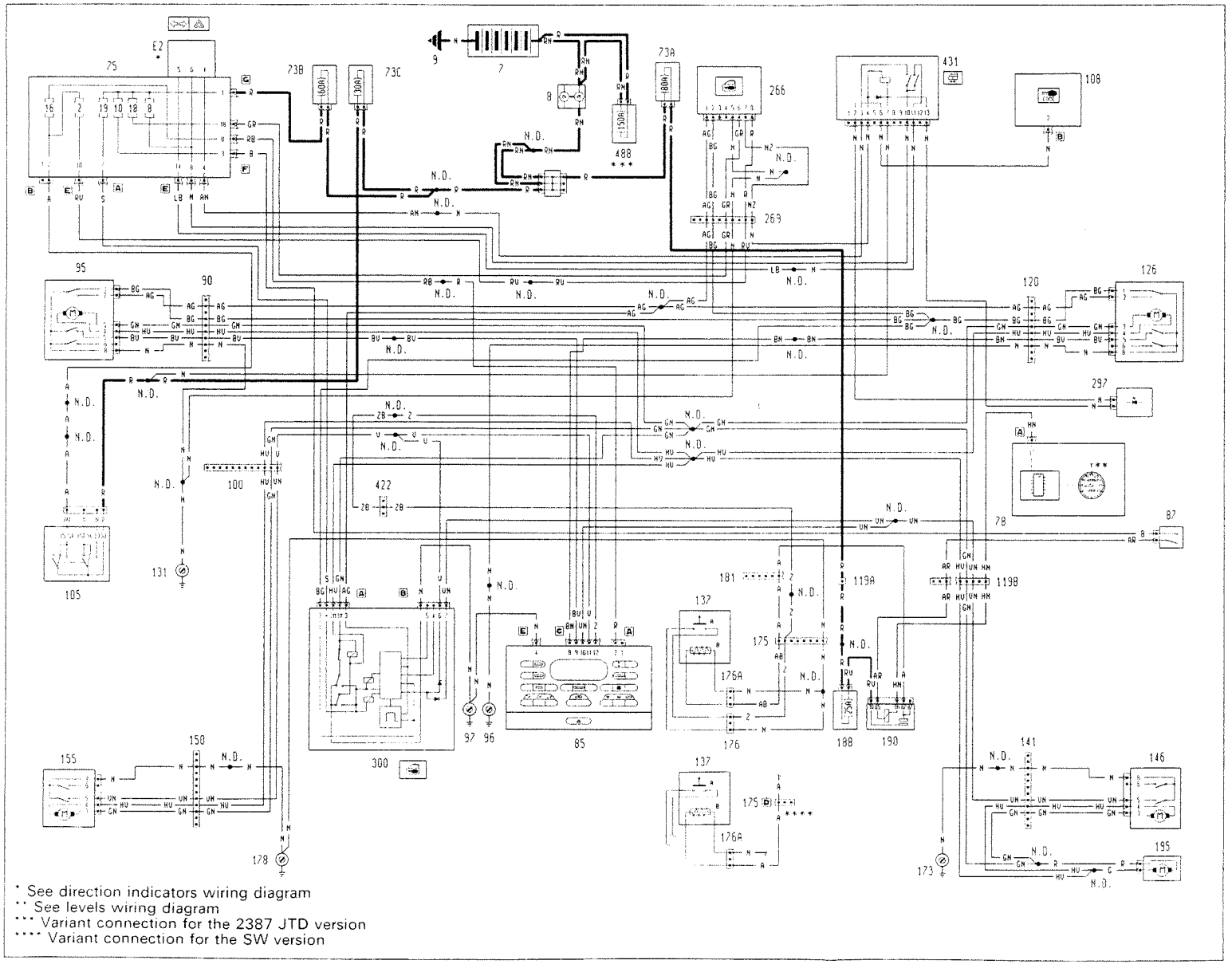

* See direction indicators wiring diagram
** See levels wiring diagram
*** Variant connection for the 2387 JTD version
**** Variant connection for the SW version

P3U48IZ01

3U1771

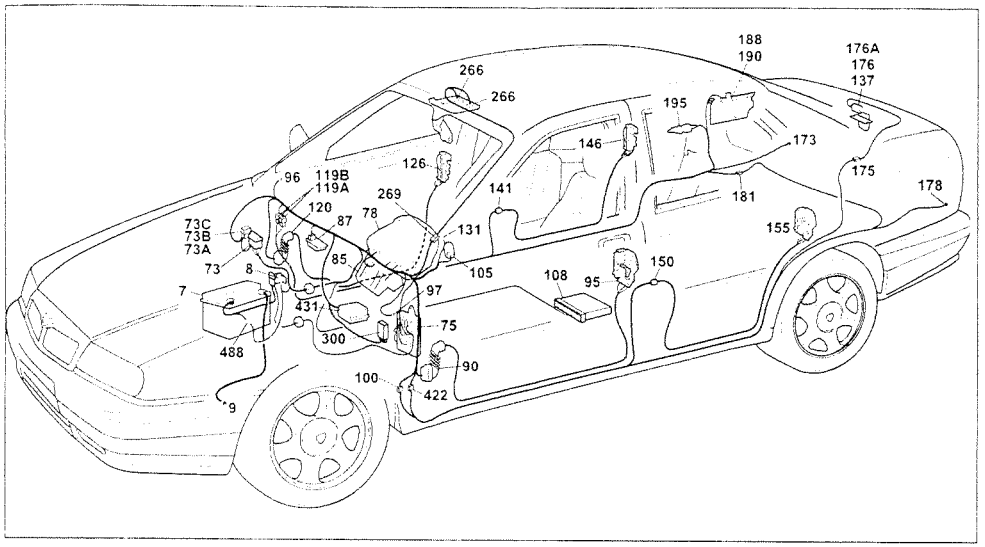

P3U179I01

Version without alarm
Central locking and signalling doors open

Components key

7 Battery
8 Main connector block
9 Earth on bodyshell
73 Secondary connector block
73A 80A fuse protecting rear services
73B 60A protective fuse for I.G.E. control unit / junction unit
73C 30A fuse protecting ignition switch/alarm device
75 Junction unit (dashboard)
E2 Intermittent device for direction indicators / hazard warning lights
78 Instrument panel
Y Electronic tachometer
85 Infocenter control unit
87 Light for glove compartment / controls for unlocking luggage compartment
90 Connection between dashboard and left front door cables
95 Left front central locking geared motor and signalling left front door open and alarm on
96 Earth on carrier
97 Earth on floor
100 Connection between dashboard and left longitudinal cables
105 Ignition switch
108 Immobilizer control unit
119A Connection between dashboard and right longitudinal cables
119B Connection between dashboard and right longitudinal cables
120 Connection between dashboard and right front door cables
126 Right front central locking geared motor and signalling right front door open and alarm on
131 Earth on steering column support
137 Tailgate lock assembly
A Luggage compartment courtesy light switch and alarm on
B Motor for locking / unlocking luggage compartment tailgate
141 Connection between right longitudinal and right rear door cables
146 Right rear door central locking geared motor and signalling right rear door open and alarm on
150 Connection between left longitudinal and left rear door cables
155 Left rear door central locking geared motor and signalling left rear door open and alarm on
173 Right rear earth
175 Connection between left longitudinal and tailgate cables
176 Tailgate cables connection
178 Left rear earth
181 Connection between left longitudinal and right longitudinal cables
188 25A fuse protecting boot release electro-magnet
190 Relay for locking / unlocking luggage compartment tailgate
195 Fuel filler flap release motor
266 Infra red receiver for alarm device
269 Connection between dashboard and receiver cables
297 Anti-theft device warning light
300 Central locking electronic control unit
431 Direction indicators operation with doors locked
422 Connection between dashboard and left longitudinal cables
488 150A maxi fuse

N.D. Ultrasound welding taped in cable loom

100 Connection between dashboard and left longitudinal cables

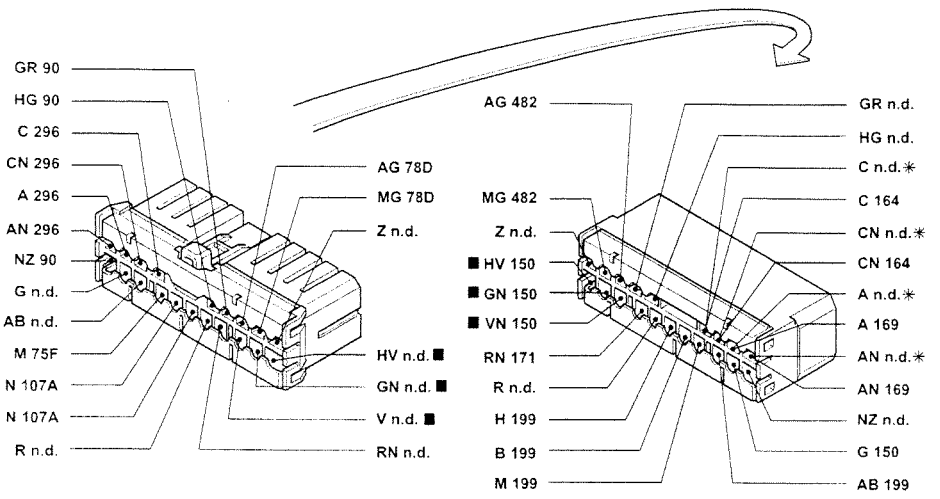

* Variant connection for Station Wagon versions

119B Connection between dashboard and right longitudinal cables

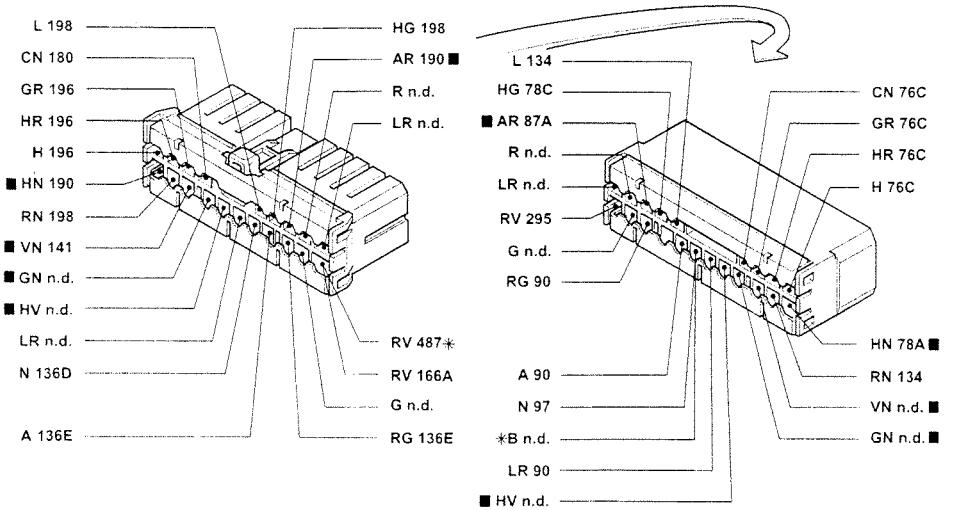

* Variant connection for Station Wagon versions

■ The cables in the wiring diagram are marked

P3U180I01

Version without alarm
Central locking and signalling doors open - (See key at end of wiring diagrams)

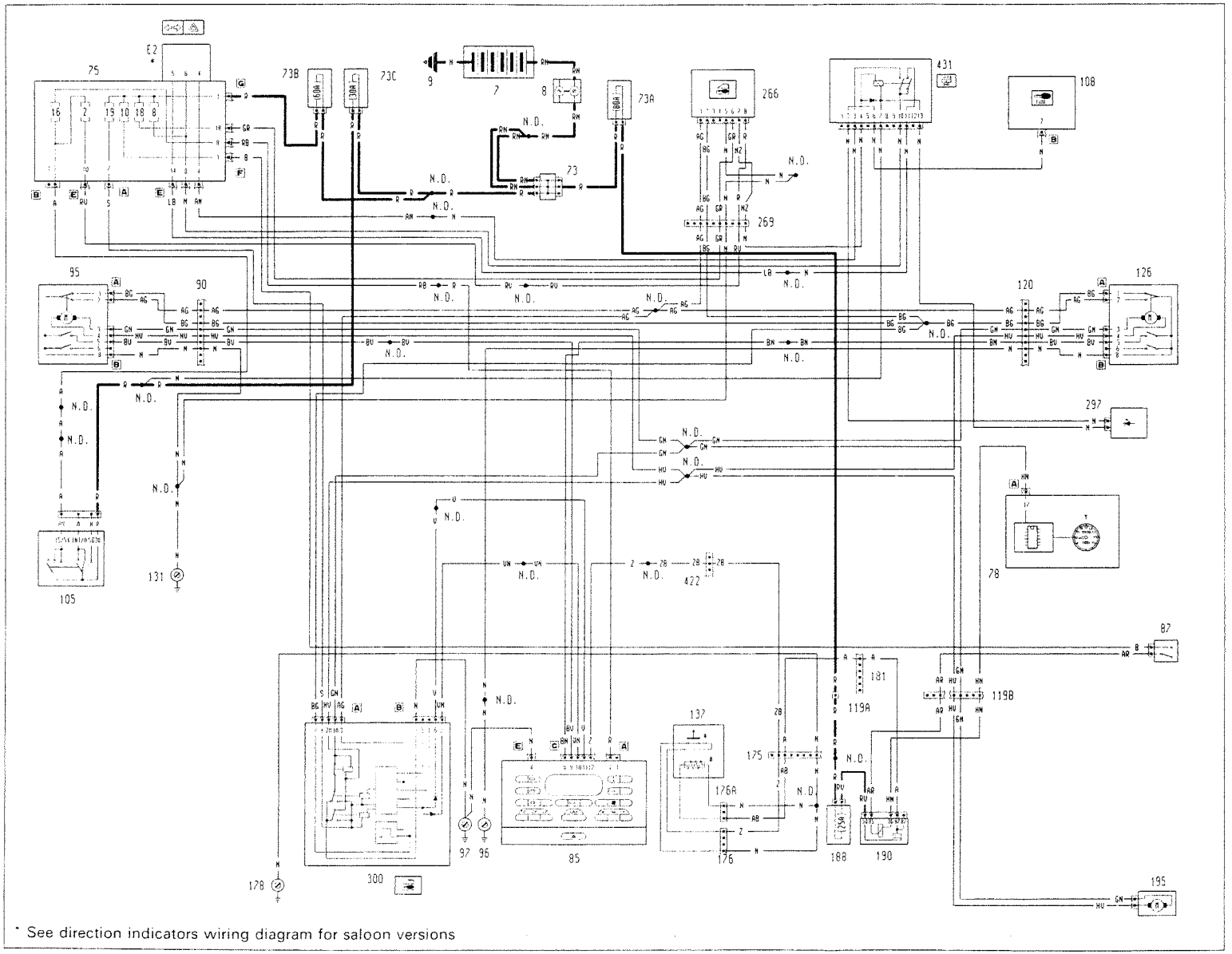

* See direction indicators wiring diagram for saloon versions

3U1811

P3U49IZ01

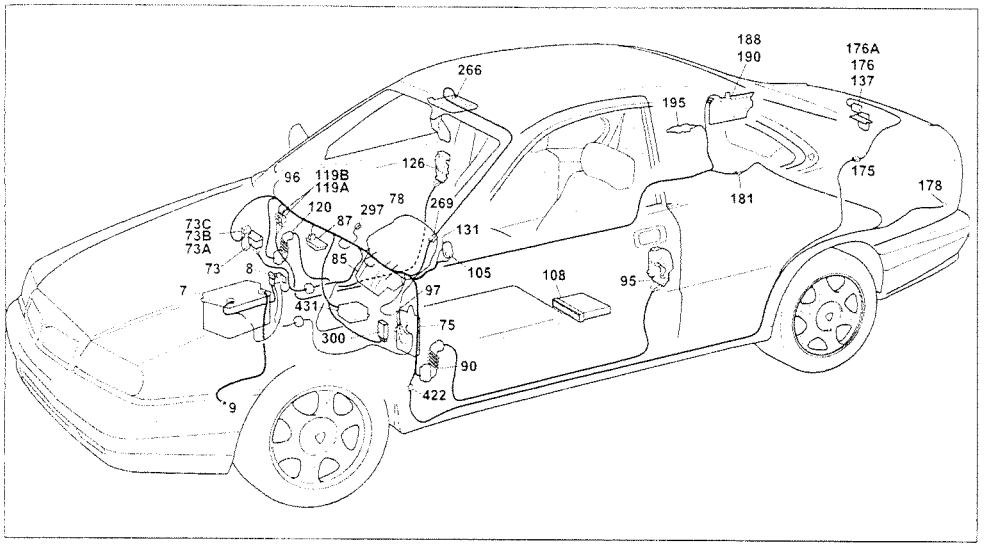

P3U183I01

Version without alarm
Central locking and signalling doors open

Components key

7 Battery
8 Main connector block
9 Earth on bodyshell
73 Secondary connector block
73A 80A fuse protecting rear services
73B 60A protective fuse for I.G.E. control unit / junction unit
73C 30A fuse protecting ignition switch/alarm device
75 Junction unit (dashboard)
E2 Intermittent device for direction indicators / hazard warning lights
78 Instrument panel
Y Electronic tachometer
85 Infocenter control unit
87 Light for glove compartment / controls for unlocking luggage compartment
90 Connection between dashboard and left front door cables
95 Left front central locking geared motor and signalling left front door open and alarm on
96 Earth on carrier
97 Earth on floor
105 Ignition switch
108 Immobilizer control unit
119A Connection between dashboard and right longitudinal cables
119B Connection between dashboard and right longitudinal cables
120 Connection between dashboard and right front door cables
126 Right front central locking geared motor and signalling right front door open and alarm on
131 Earth on steering column support
137 Tailgate lock assembly
A Luggage compartment courtesy light switch and alarm on
B Motor for locking / unlocking luggage compartment tailgate
173 Right rear earth
175 Connection between left longitudinal and tailgate cables
176 Tailgate cables connection
178 Left rear earth
181 Connection between left longitudinal and right longitudinal cables
188 25A fuse protecting boot release electro-magnet
190 Relay for locking / unlocking luggage compartment tailgate
195 Fuel filler flap release motor
266 Infra red receiver for alarm device
269 Connection between dash. and receiver cables
297 Anti-theft device warning light
300 Central locking electronic control unit
422 Connection between dashboard and left longitudinal cables
431 Direction indicators operation with doors locked
N.D. Ultrasound welding taped in cable loom

120 Connection between dashboard and right front door cables

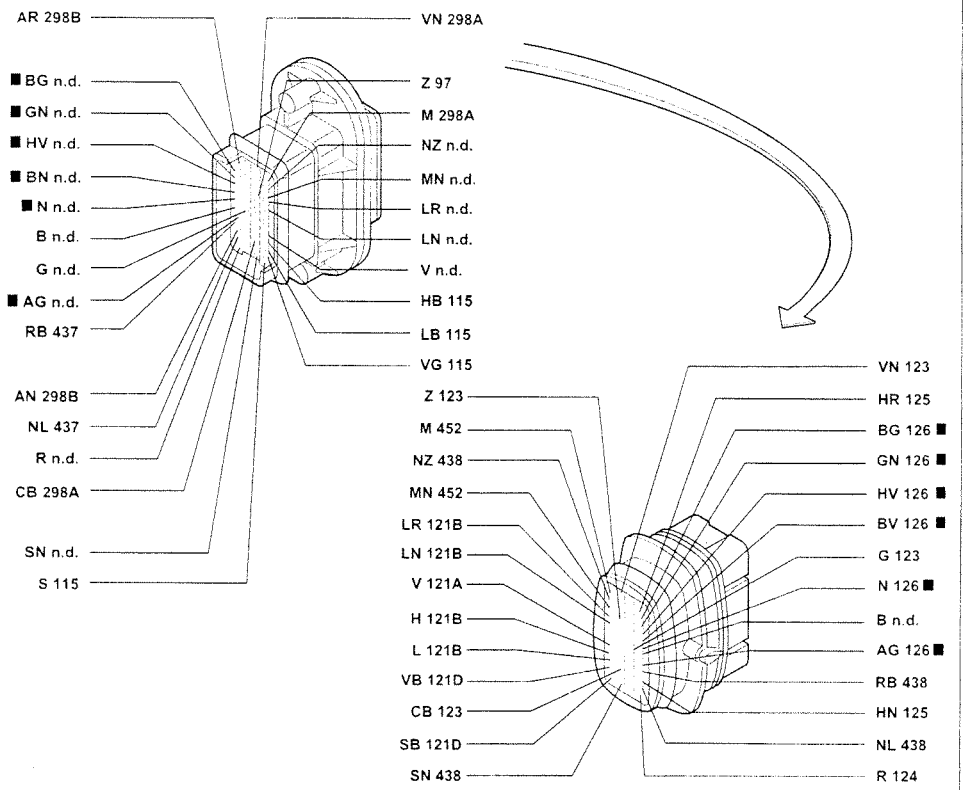

422 Connection between dashboard and left longitudinal cables (Only for COUPE' versions)

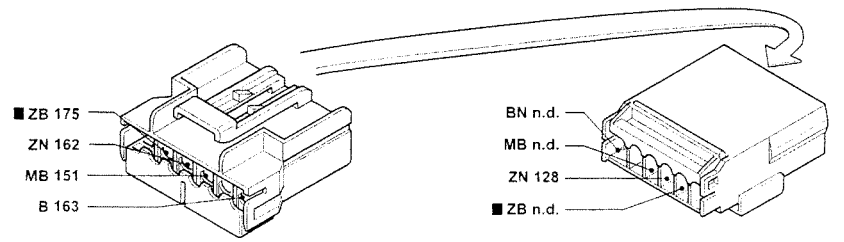

P3U184I01

■ The cables in the wiring diagram are marked

Electric, heated front seats - Driver's seat with memory - (See key at end of wiring diagrams)

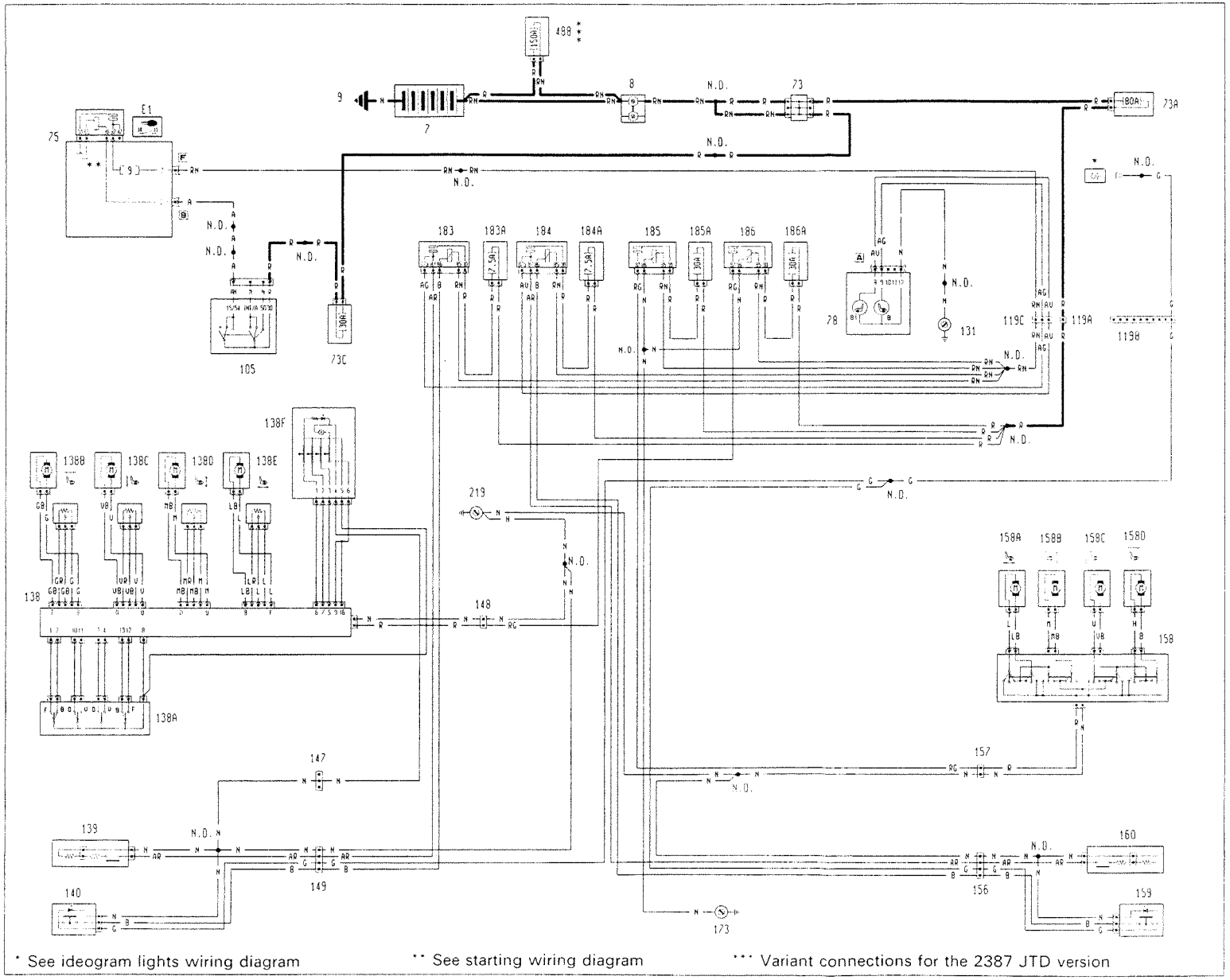

* See ideogram lights wiring diagram

** See starting wiring diagram

*** Variant connections for the 2387 JTD version

P3U501Z01

3U185I

Copyright by Fiat Auto

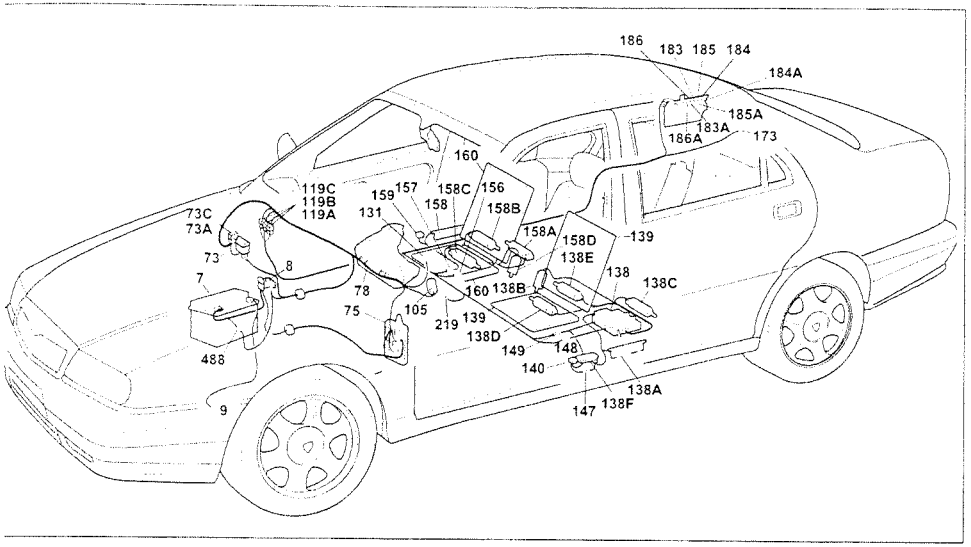

P3U187I01

lectric, heated front seats - Driver's seat with memory

omponents key

7 Battery
8 Main connector block
9 Earth on bodyshell
73 Secondary connector block
'3A 80A fuse protecting rear services
'3C 30A fuse protecting ignition switch / alarm device
75 Junction unit (dashboard)
E1 Ignition discharge relay
78 Instrument panel
B Driver's heated seat warning light
B1 Passenger side heated seat warning light
105 Ignition switch
9A Connection between dashboard and right longitudinal cables
9B Connection between dashboard and right longitudinal cables
9C Connection between dashboard and right longitudinal cables
31 Earth on steering column support
38 Driver's electric seat with memory electronic control unit
8A Control panel for electrically operated driver's seat
8B Driver's seat backrest adjustment motor
8C Driver's seat height adjustment motor
8D Driver's seat height adjustment motor
8E Driver's seat sliding adjustment motor
8F Control panel for driver's seat programming
A Switch for luggage compartment courtesy light and engaging anti-theft device
B Motor for locking / unlocking luggage compartment tailgate

139 Driver's side seat heated pad
140 Switch for driver's side seat heated pad
147 Left front seat cables connection
148 Connection between left longitudinal and left seat cables
149 Connection between left longitudinal and left seat cables
156 Connection between right longitudinal and right seat cables
157 Connection between right longitudinal and right seat cables
158 Control panel for electrically adjustable passenger seat
158A Passenger seat sliding adjustment motor
158B Passenger seat height adjustment motor
158C Passenger seat height adjustment motor
158D Passenger seat backrest adjustment motor
159 Switch for passenger seat heater pad
160 Passenger seat heater pad
173 Right rear earth
182 Rear connector block
183 Relay for driver's seat heater pad
183A 7.5A fuse protecting driver's heated pad relay
184 Relay for passenger seat heater pad
184A 7.5A fuse protecting passenger heated pad relay
185 Relay for electrically operated driver's seat
185A 30A fuse protecting electrically operated passenger seat
186 Relay for electrically operated passenger seat
186A 30A fuse protecting electrically operated driver's seat
219 Earth on centre tunnel
440 Control unit initialization line for driver's seat
446 Control unit initialization line for passenger seat
488 150A maxi fuse

N.D. Ultrasound welding taped in cable loom

119B Connection between dashboard and right longitudinal cables

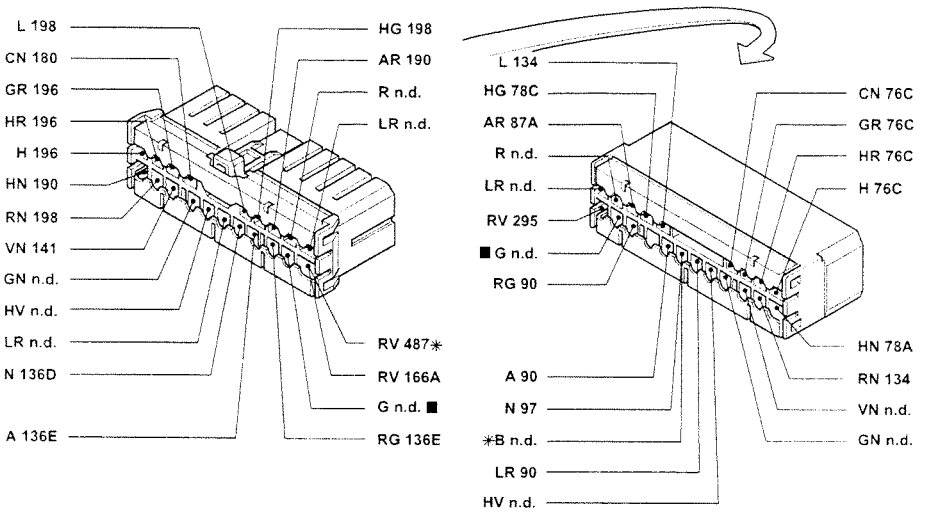

* Variant connection for Station Wagon versions

119C Connection between dashboard and right longitudinal cables

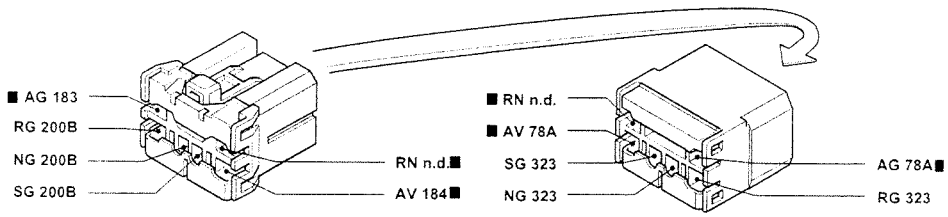

156 Connection between right longitudinal and right seat cables

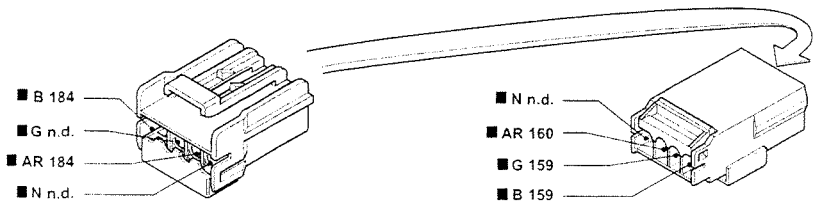

■ The cables in the wiring diagram are marked

P3U188I01

Electric, heated front seats - Driver's seat with memory - (See key at end of wiring diagrams)

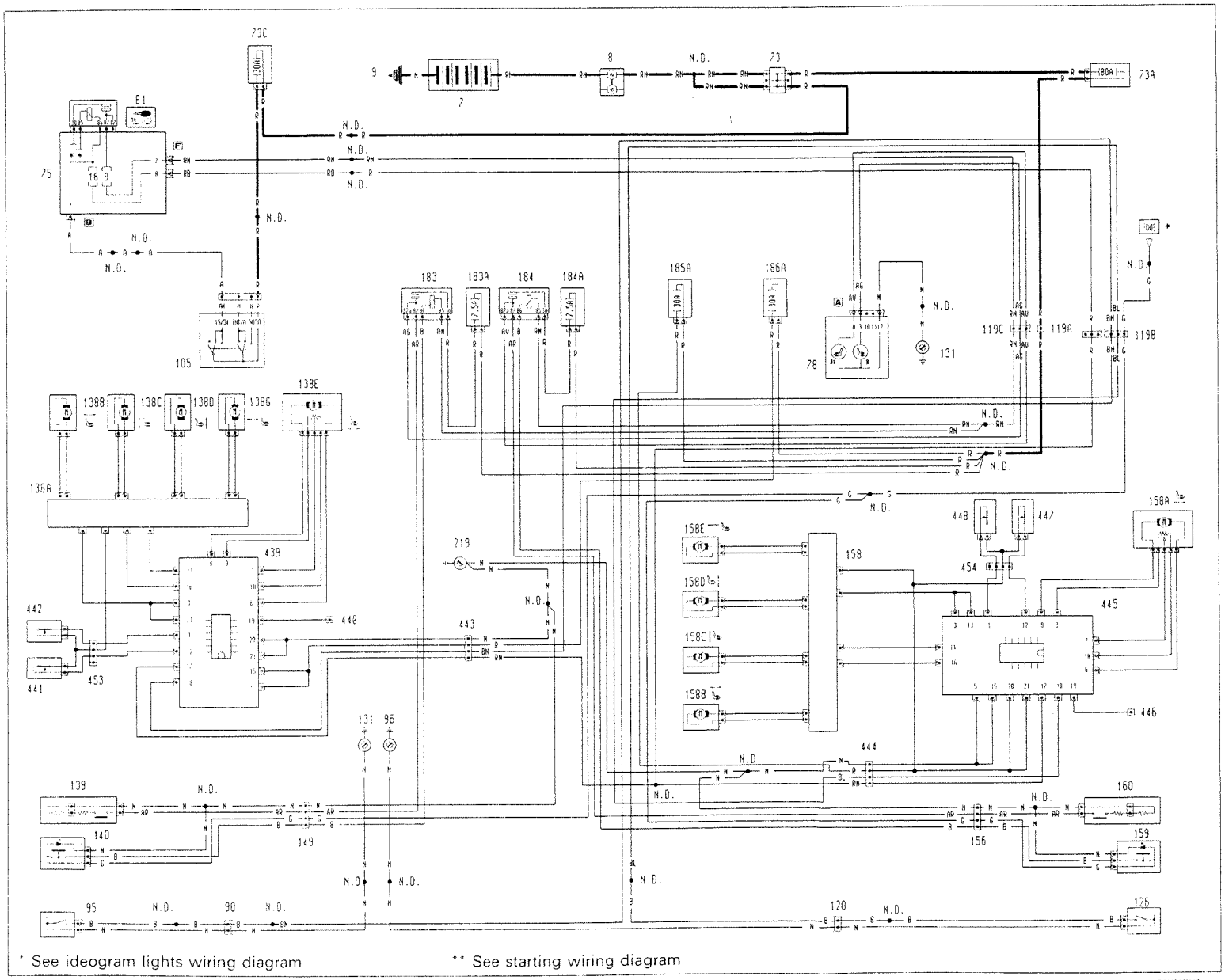

* See ideogram lights wiring diagram

** See starting wiring diagram

P3U511Z01

3U1891

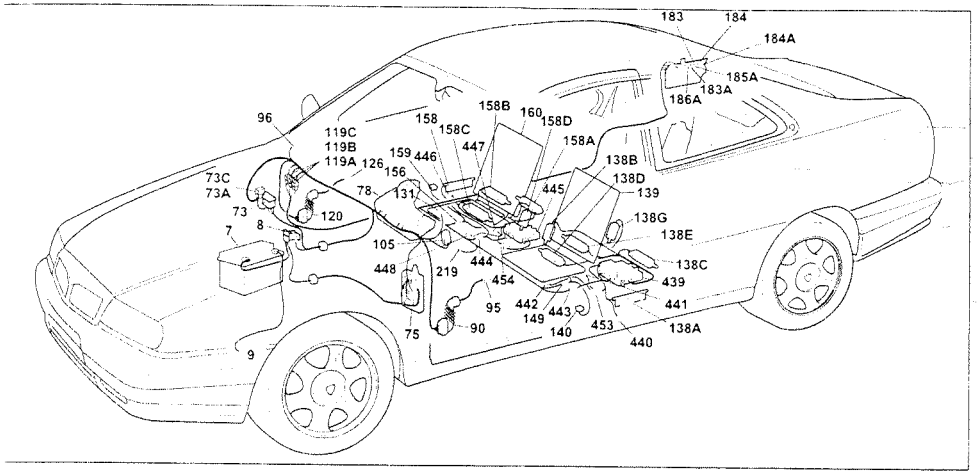

P3U191I01

Electric, heated front seats - Driver's seat with memory

Components key

7 Battery
8 Main connector block
9 Earth on bodyshell
73 Secondary connector block
73A 80A fuse protecting rear services
73C 30A fuse protecting ignition switch / alarm device
75 Junction unit (dashboard)
E1 Ignition discharge relay
78 Instrument panel
B Driver's side heated seat warning light
B1 Passenger's side heated seat warning light
90 Connection between dashboard and left front door cables
95 Left front central locking geared motor and signalling left front door open and anti-theft device on
96 Earth on carrier
105 Ignition switch
119A Connection between dashboard and right longitudinal cables
119B Connection between dashboard and right longitudinal cables
119C Connection between dashboard and right longitudinal cables
120 Connection between dashboard and right front door cables
131 Earth on steering column support
138A Control panel for electrically adjustable driver's seat
138B Driver's seat backrest adjustment motor
138C Driver's seat height adjustment motor
138D Driver's seat height adjustment motor
138E Driver's seat sliding adjustment motor
138G Driver's seat lumbar adjustment motor
139 Driver's side seat heated pad
140 Switch for driver's side seat heated pad
149 Connection between left longitudinal and left seat cables
156 Connection between right longitudinal and right seat cables
158 Control panel for electrically adjustable passenger seat
158A Passenger seat sliding adjustment motor
158B Passenger seat height adjustment motor
158C Passenger seat height adjustment motor
158D Passenger seat backrest adjustment motor
158E Passenger seat lumbar adjustment motor
159 Switch for passenger seat heater pad
160 Passenger seat heater pad
182 Rear connector block
183 Relay for driver's seat heater pad
183A 7.5A fuse protecting driver's heated pad relay
184 Relay for passenger seat heater pad
184A 7.5A fuse protecting passenger heated pad relay
185A 30A fuse protecting electrically adjustable passenger seat
186A 30A fuse protecting electrically adjustable driver's seat
219 Earth on centre tunnel
439 Electrically adjustable driver's seat control unit
440 Diag. socket for electrically adjustable driver's seat
441 Sensor for detecting driver's seat retracted position
442 Sensor for detecting driver's seat forwards position
443 Connection between right longitudinal and driver's easy-enter electrically operated seat cables
444 Connection between right longitudinal and passenger easy-enter electrically operated seat cables
445 Electrically operated passenger seat control unit
446 Diag. socket for electrically adjust. passenger seat
447 Sensor detecting passenger seat in retracted position
448 Sensor detecting passenger seat in forwards position
453 Connection between driver's seat position sensors
454 Connection between passenger seat position sensors
488 150A maxi fuse

N.D. Ultrasound welding taped in cable loom

120 Connection between dashboard and right front door cables

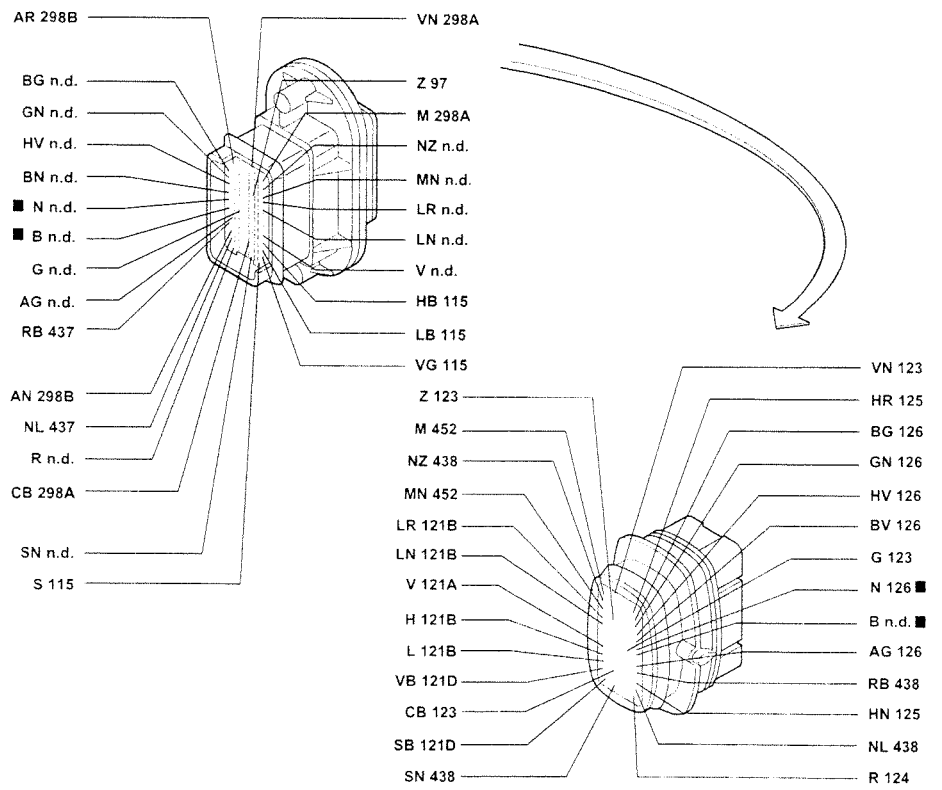

156 Connection between right longitudinal and right seat cables

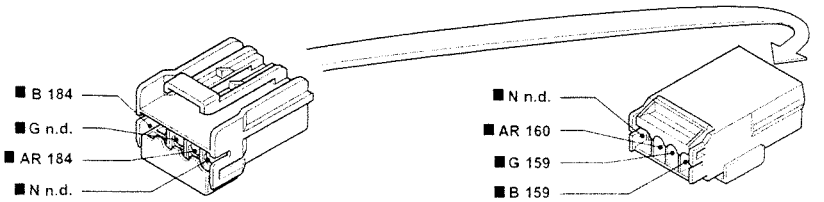

■ The cables in the wiring diagram are marked

P3U192I01

Petrol versions

Automatic climate control - (See key at end of wiring diagrams)

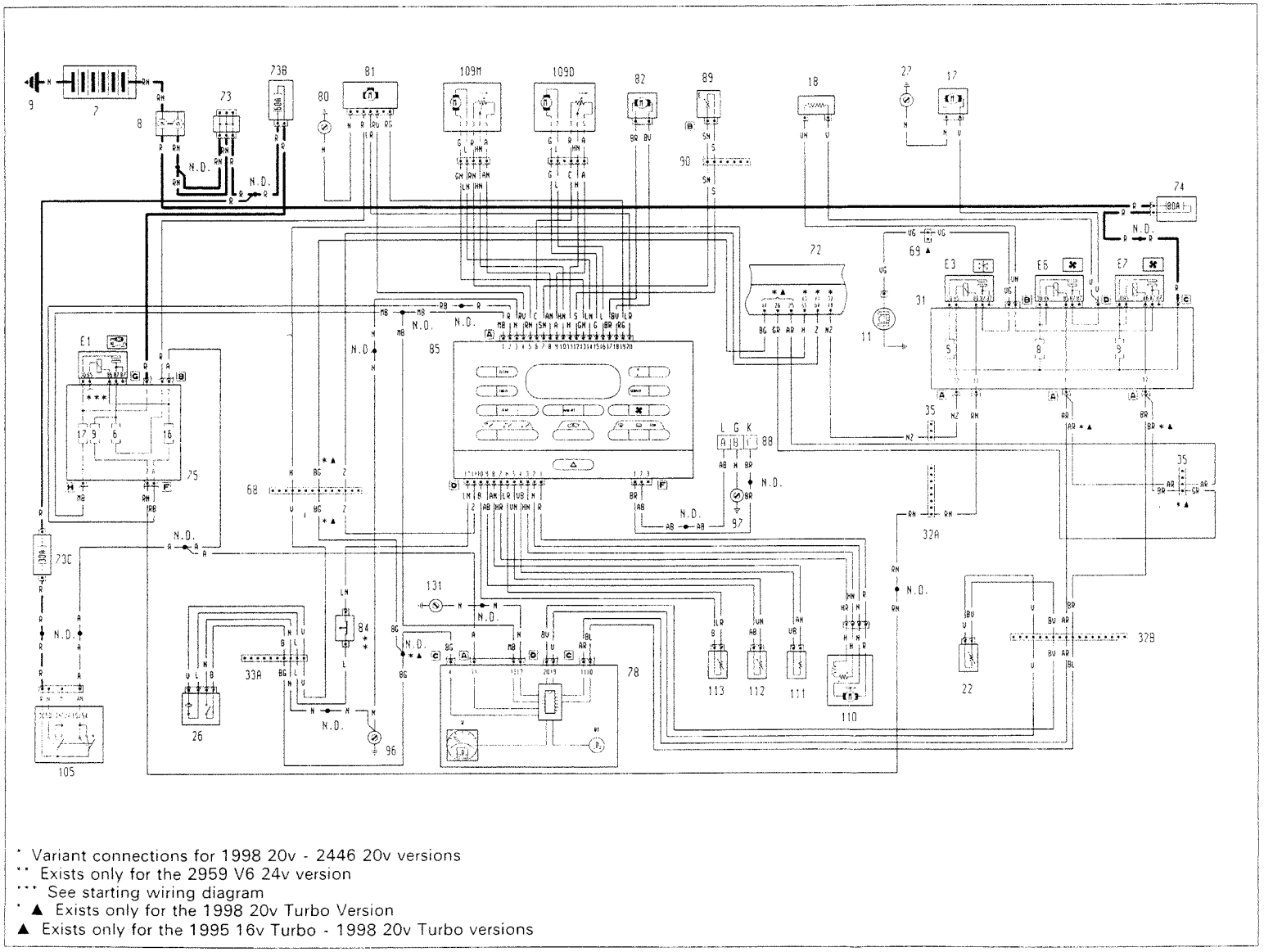

* Variant connections for 1998 20v - 2446 20v versions
** Exists only for the 2959 V6 24v version
*** See starting wiring diagram
* ▲ Exists only for the 1998 20v Turbo Version
▲ Exists only for the 1995 16v Turbo - 1998 20v Turbo versions

P3U52IZ01

3U1931

Copyright by Fiat Auto

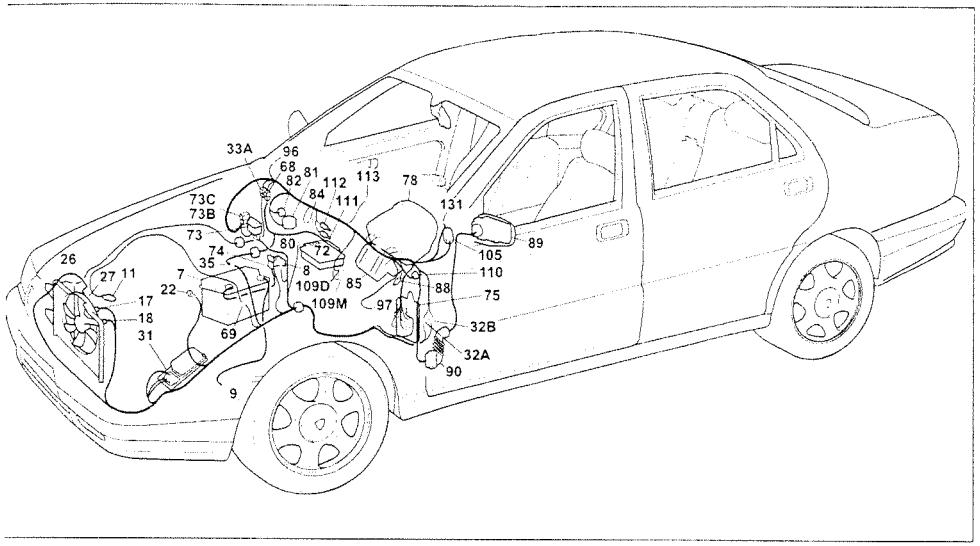

P3U195I01

Petrol versions
Automatic climate control

Components key

7 Battery
8 Main connector block
9 Earth on bodyshell
11 Compressor coupling for air conditioning
17 1st Engine cooling fan
18 Engine cooling fan speed resistance
22 Engine coolant temperature sender unit
26 Three stage pressure switch
27 Right front earth
31 Peripheral control unit (engine compartment)
E3 Compressor coupling relay feed
E6 Engine cooling fan high speed relay feed
E7 Engine cooling fan low speed relay feed

32A Connection between dash. & left engine compartment cables
32B Connection between dash. & left engine compartment cables
33A Connection between dash. & right engine compartment cables
35 Connection between engine comp. and electronic injection cables
68 Connection between dashboard and electronic injection cables
69 Engine services cable connection
72 Fuel injection control unit
73 Secondary connector block
73B 60A protective fuse for I.G.E. control unit / junction unit
73C 30A fuse protecting ignition switch/anti-theft device

74 80A fuse protecting peripheral control unit (engine compartment)
75 Junction unit (dashboard)
E1 Ignition discharge relay

78 Instrument panel
W Water temperature gauge
W1 Engine coolant overheating warning light

80 Power earth on dashboard
81 Climate control fan (Brushless)
82 Air recirculation motor
84 Single stage pressure switch (3000 r.e.)
85 Infocenter control unit
88 Diagnostic socket
89 Left rear view mirror
A Motor for folding left rear view mirror
B Motor for vertical adjustment of left rear view mirror
C Motor for horizontal adjustment of left rear view mirror
D Left rear view mirror heating resistance
90 Connection between dashboard and left front door cables
96 Earth on carrier
97 Earth on floor
105 Ignition switch
109D Distribution / mixture motor
109M Distribution / mixture motor
110 Vehicle interior air temperature sensor
111 Mixed air sensor 1
112 Mixed air sensor 2
113 Solar temperature sensor
131 Earth on steering column support

N.D. Ultrasound welding taped in cable loom

33A Connection between dashboard and right engine compartment cables

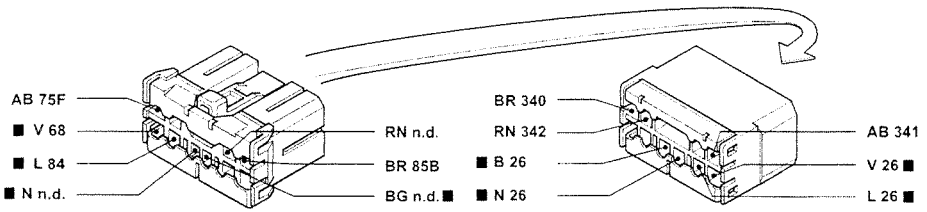

90 Connection between dashboard and left front door cables

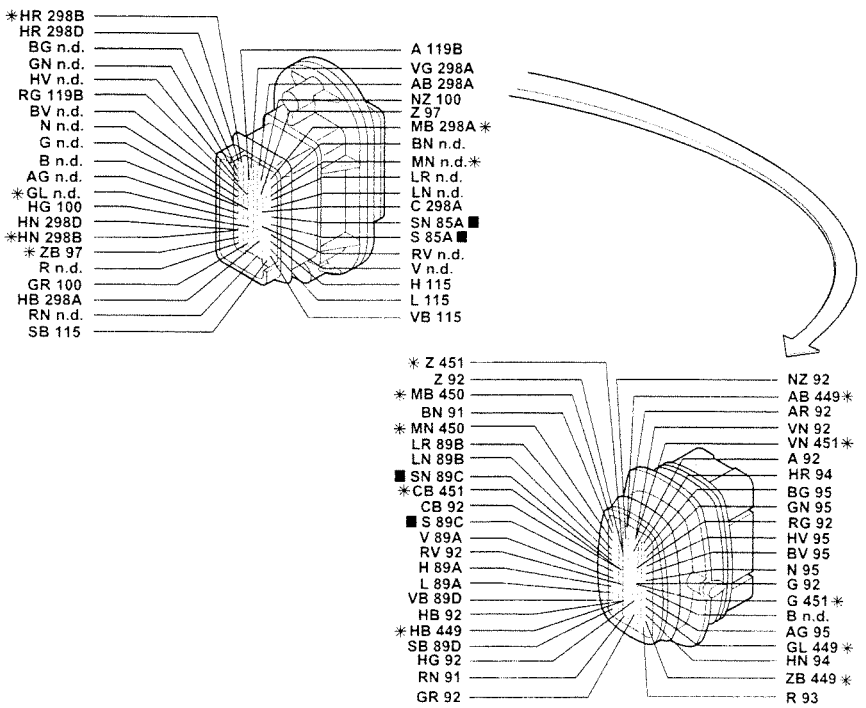

* Variant connection for COUPE' versions

■ The cables in the wiring diagram are marked

P3U196I01

TD versions

Automatic climate control - (See key at end of wiring diagrams)

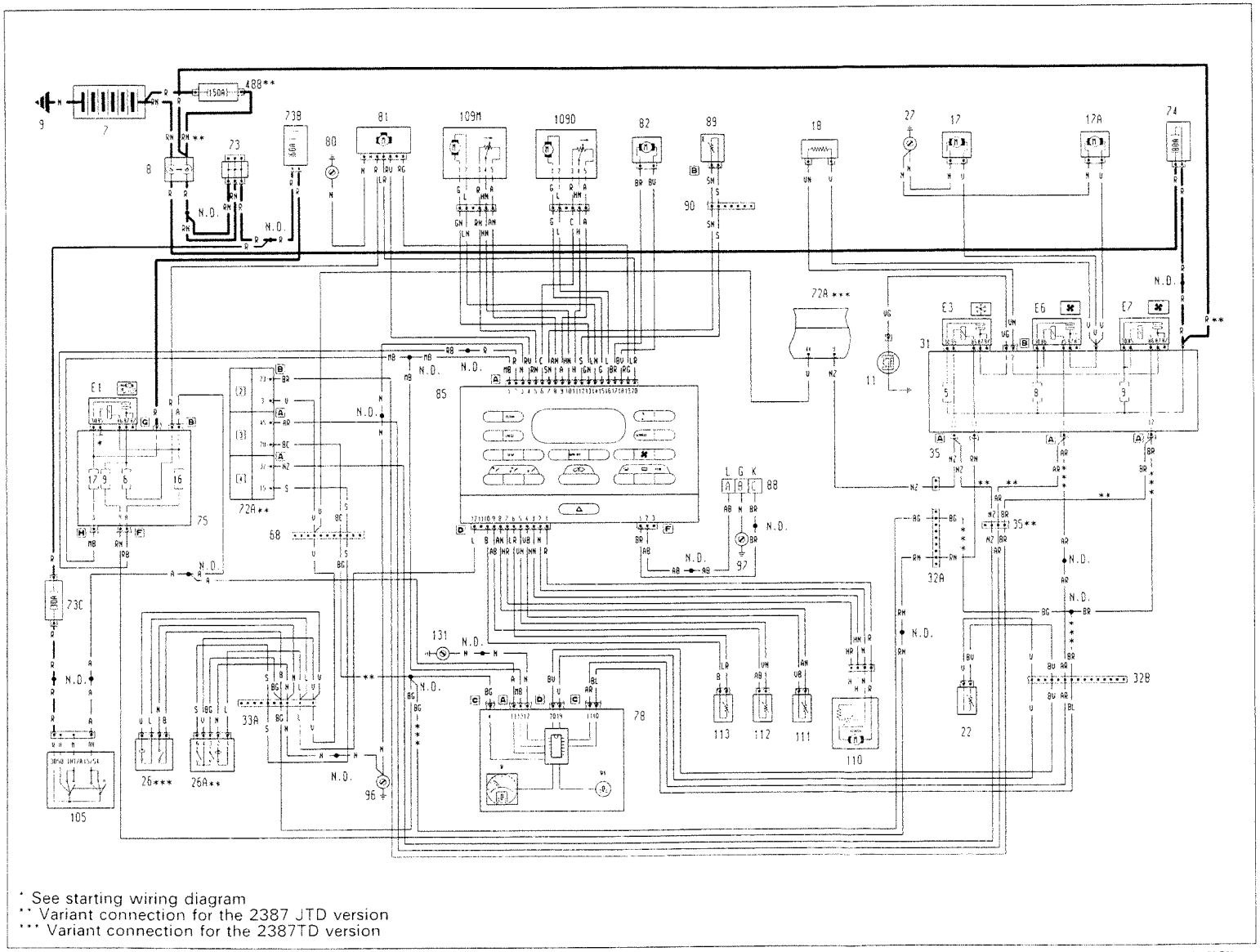

* See starting wiring diagram
** Variant connection for the 2387 JTD version
*** Variant connection for the 2387TD version

P3U531Z01

3U1971

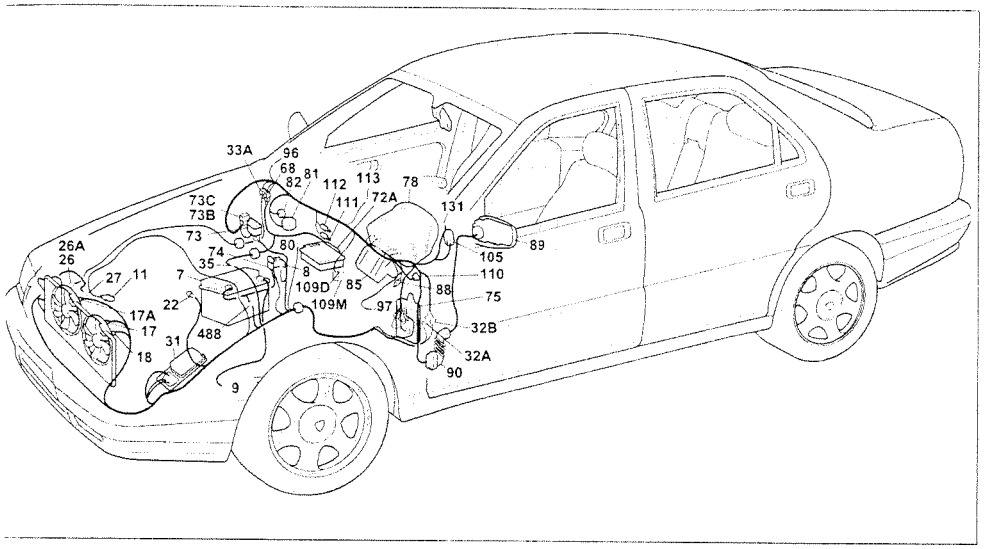

P3U199101

Diesel versions
Automatic climate control

Components key

7 Battery
8 Main connector block
9 Earth on bodyshell
11 Compressor coupling for air conditioning
17 1st. Engine cooling fan
17A 2nd. Engine cooling fan
18 Engine cooling fan speed resistance
22 Engine coolant temperature sender unit
26 Three stage pressure switch
26A Four stage pressure switch
27 Right front earth
31 Peripheral control unit (engine compartment)
E3 Compressor coupling relay feed
E6 Engine cooling fan high speed relay feed
E7 Engine cooling fan low speed relay feed
32A Connection between dash. & left engine compartment cables
32B Connection between dash. & left engine compartment cables
33A Connection between dash. & right engine compartment cables
35 Connection btwn engine comp. & electronic injection cables
68 Connection between dashboard and electronic injection cables
72A Fuel pump electronic control unit
73 Secondary connector block
73B 60A protective fuse for I.G.E. control unit / junction unit
73C 30A fuse protecting ignition switch/alarm device
74 80A fuse protecting peripheral control unit (engine compartment)
75 Junction unit (dashboard)
E1 Ignition discharge relay
78 Instrument panel
W Water temperature gauge
W1 Engine coolant overheating warning light
80 Power earth in dashboard
81 Climate control fan (Brushless)
82 Air recirculation motor
84 Single stage pressure switch (3000 r.p.)
85 Infocenter control unit
88 Diagnostic socket for Fiat / Lancia tester
89 Left rear view mirror
A Motor for folding left rear view mirror
B Motor for vertical adjustment of left rear view mirror
C Motor for horizontal adjustment of left rear view mirror
D Left rear view mirror heating resistance
90 Connection between dashboard and left front door cables
96 Earth on carrier
97 Earth on floor
105 Ignition switch
109D Distribution / mixture motor
109M Distribution / mixture motor
110 Vehicle interior air temperature sensor
111 Mixed air sensor 1
112 Mixed air sensor 2
113 Solar temperature sensor
131 Earth on steering column support
488 150A maxi fuse

N.D. Ultrasound welding taped in cable loom

33A Connection between dashboard and right engine compartment cables (Only for 2387 TD - 2387 JTD)

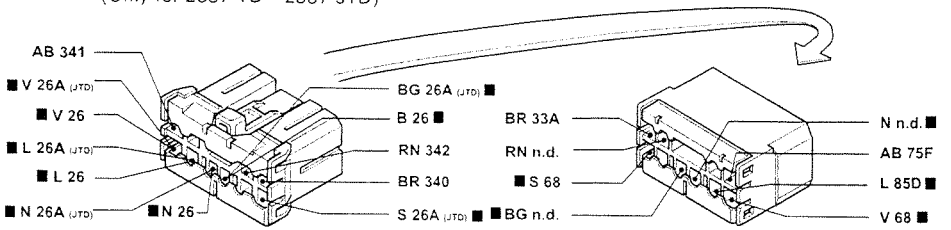

90 Connection between dashboard and left front door cables

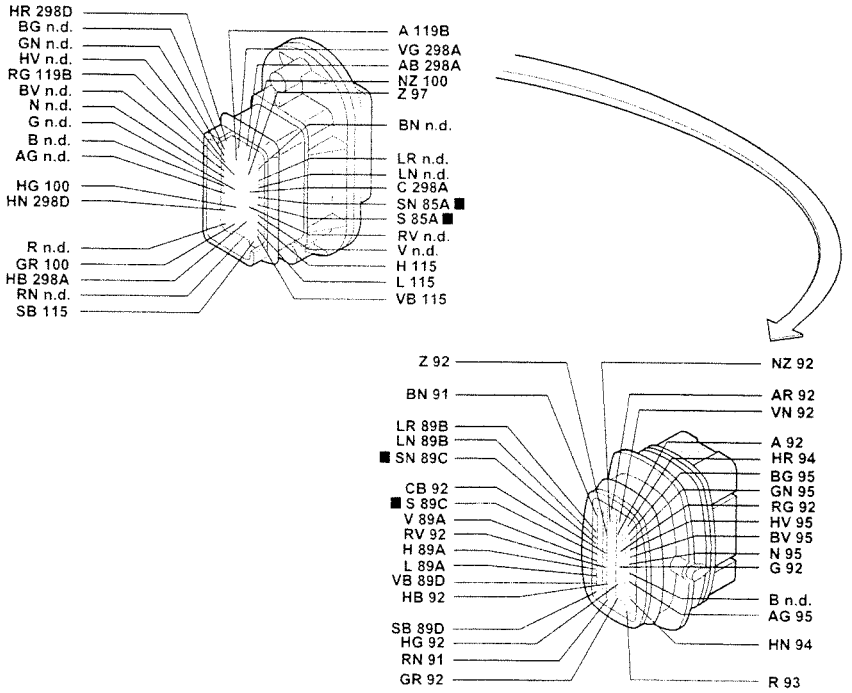

■ The cables in the wiring diagram are marked

P3U200101

Automatic transmission (Aisin) - (See key at end of wiring diagrams)

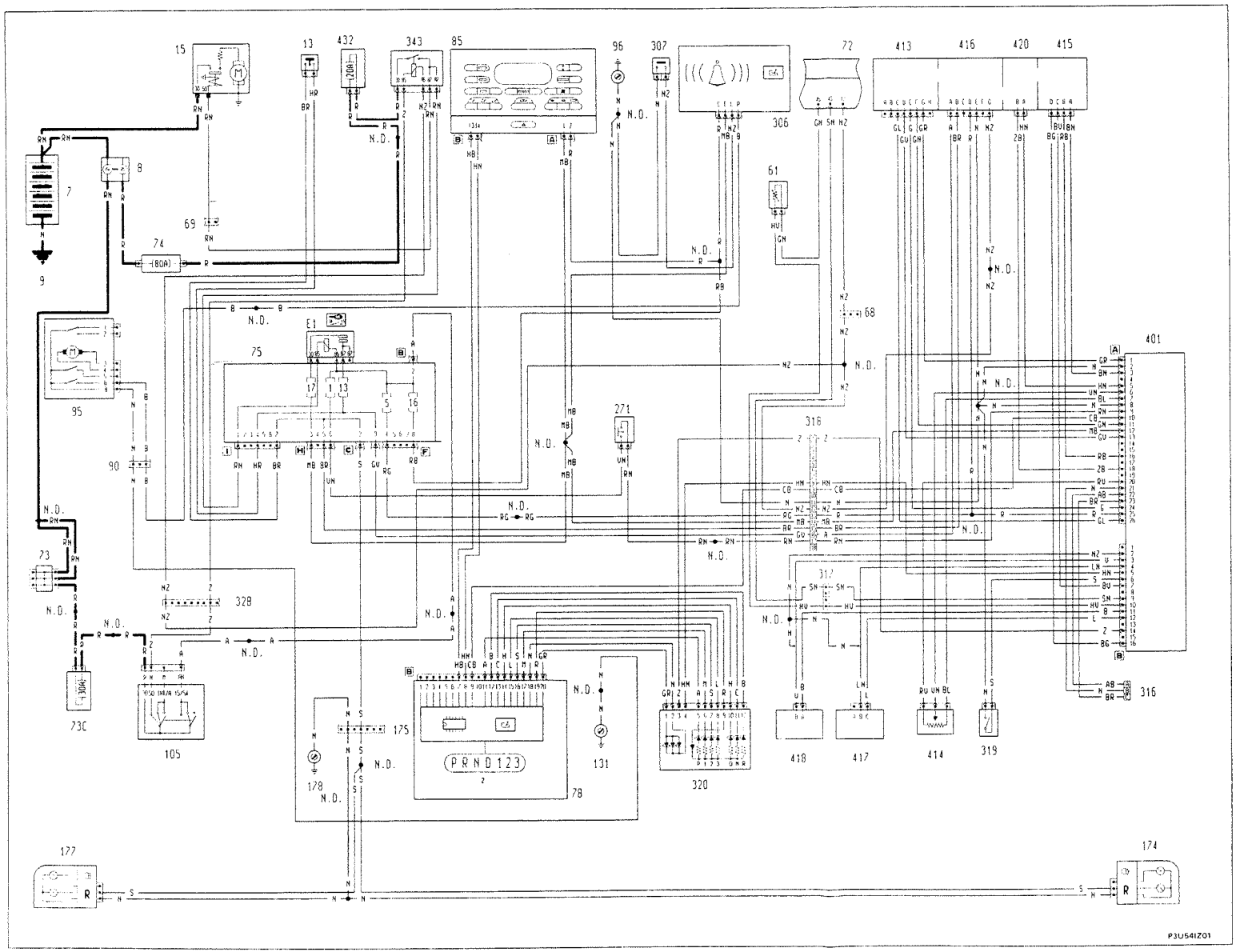

3U2011

Copyright by Fiat Auto

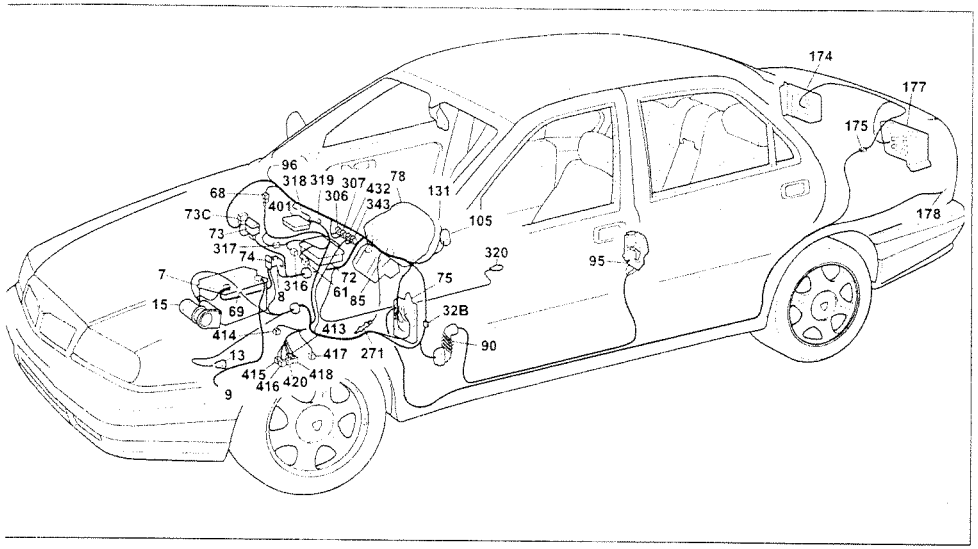

P3U203I01

1998/2446 Version
Automatic transmission (Aisin)

Components key

7 Battery
8 Main connector block
9 Earth on bodyshell
13 Reversing lights switch
15 Starter motor
32B Connection between dash & left engine compartment cables
61 Engine coolant temperature sensor for electronic injection
68 Connection between dashboard and electronic injection cables
69 Engine services cable connection
72 Fuel injection control unit
73 Secondary connector block
73C 30A fuse protecting ignition switch/alarm device
74 80A fuse protecting peripheral control unit (engine compartment)
75 Junction unit (dashboard)
E1 Ignition discharge relay
78 Instrument panel
Z Electronic automatic transmission gear selection display
85 Infocenter control unit
90 Connection between dashboard and left front door cables
95 Left front central locking geared motor and signalling left front door open and alarm on
96 Earth on carrier
105 Ignition switch
131 Earth on steering column support
174 Right rear light cluster on moveable section
175 Connection between left longitudinal and tailgate cables
177 Left rear light cluster on moveble section
178 Left rear earth
271 Brake lights switch
306 Electronic automatic transmission horn
307 Switch for electronic automatic transmission horn
316 Diagnostic socket for electronic automatic transmission
317 Connection between automatic transmission and electronic injection cables
318 Connection between electronic auto. trans. and dash. cables
319 Preparation for Kick-Down
320 Trim on electronic automatic transmission gear selector lever
343 40A starter relay
401 Control unit for electronic auto. trans. gear selection (AISIN)
413 Connector to solenoid valves
414 Butterfly valve position potentiometer
415 Gear position selector
416 Gear position selector
417 Engine rpm sensor
418 Vehicle speed sensor
420 Automatic transmission oil temperature sensor
432 20A protective fuse ignition switch relay feed

N.D. Ultrasound welding taped in cable loom

69 Engine services cable connection (Only for 1998/2446)

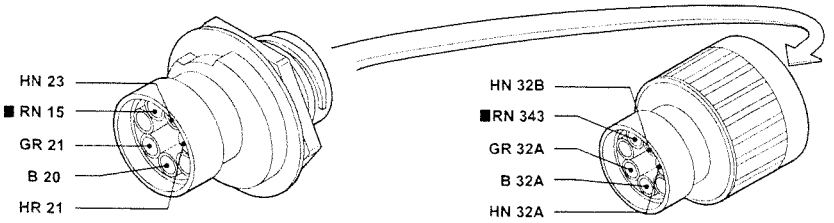

175 Connection between left longitudinal and tailgate cables

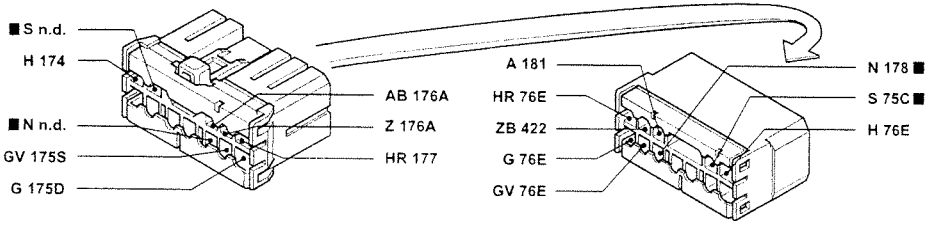

317 Connection between electronic auto. trans. and electronic injection cables (Only for 1998/2446)

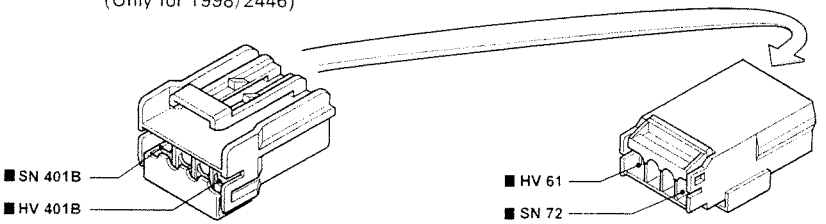

318 Connection between electronic automatic transmission and dashboard cables (Only for 1998/2446)

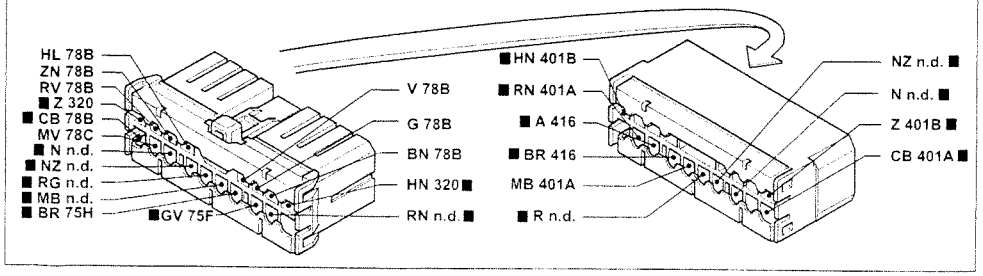

■ The cables in the wiring diagram are marked

P3U204I01

Automatic transmission (ZF) - (See key at end of wiring diagrams)

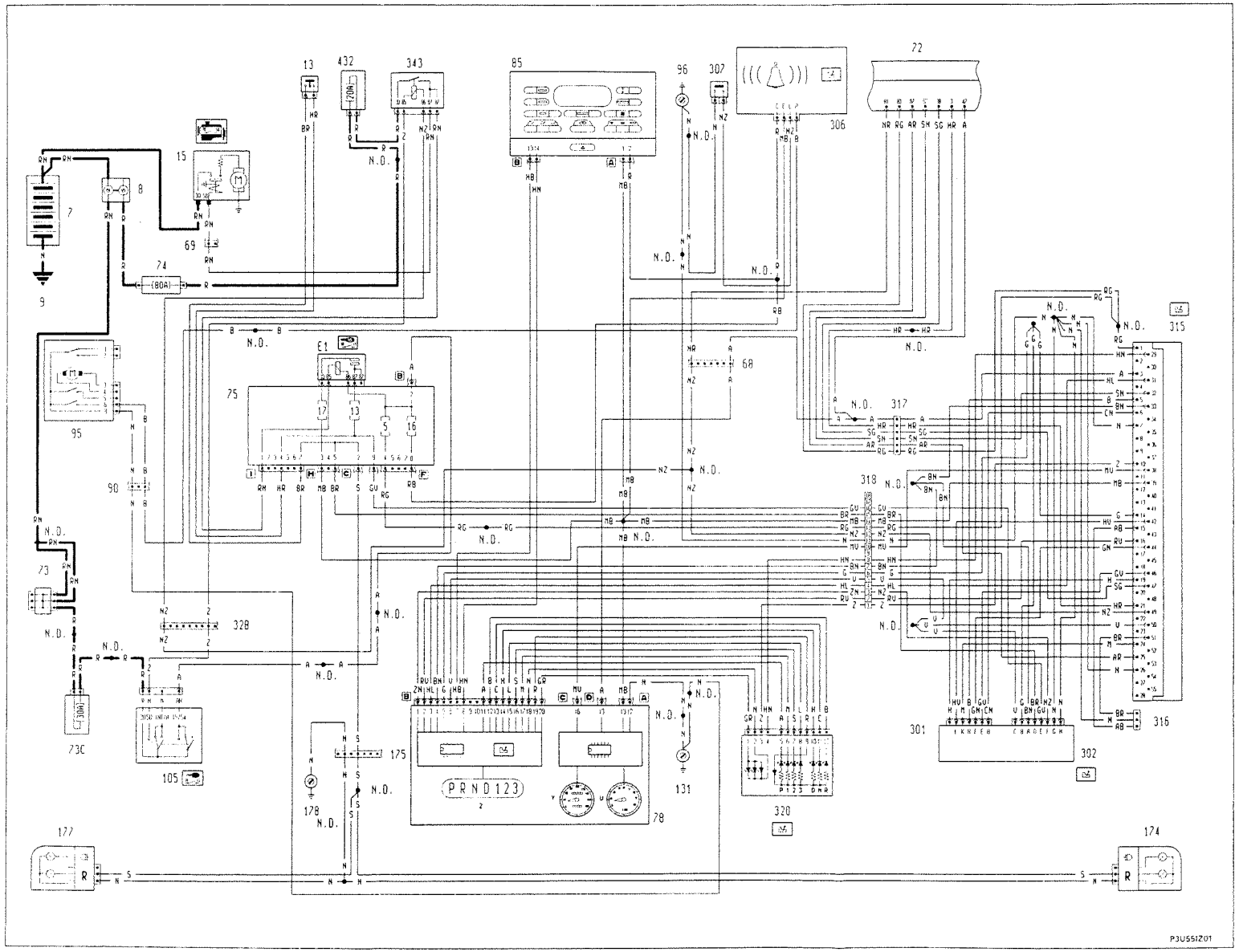

3U205I

Copyright by Fiat Auto

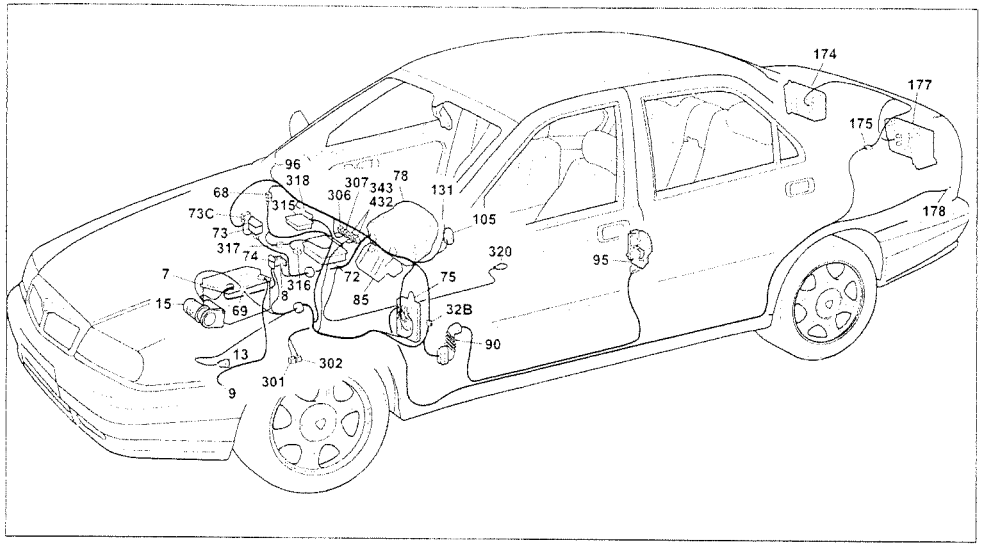

P3U207I01

2959 V6 Version
Automatic transmission (ZF)

Components key

7 Battery
8 Main connector block
9 Earth on bodyshell
13 Reversing lights switch
15 Starter motor
32B Connection between dash. & left engine compartment cables
68 Connection between dash. & electronic injection cables
69 Engine services cable connection
72 Fuel injection control unit
73 Secondary connector block
73C 30A fuse protecting ignition switch/alarm device
74 80A fuse protecting peripheral control unit (engine compartment)
75 Junction unit (dashboard)
E1 Ignition discharge relay
78 Instrument panel
U Electronic rev counter
Y Electronic tachometer
Z Electronic automatic transmission gear selection display
85 Infocenter control unit
90 Connection between dashboard and left front door cables
95 Left front central locking geared motor and signalling left front door open and alarm on
96 Earth on carrier
105 Ignition switch
131 Earth on steering column support
174 Right rear light cluster on moveable section
175 Connection between left longitudinal and tailgate cables
177 Left rear light cluster on moveable section
178 Left rear earth
301 Solenoid valves
302 Switch control unit
306 Electronic automatic transmission horn
307 Switch for electronic automatic transmission horn
315 Electronic automatic transmission gear selector control unit (ZF)
316 Diagnostic socket for electronic automatic transmission
317 Connection between automatic transmission and electronic injection cables
318 Connection between electronic auto. trans. and dashboard cables
320 Trim on electronic automatic transmission gear selector lever
343 40A starter relay
432 20A protective fuse ignition switch relay feed

N.D. Ultrasound welding taped in cable loom

69 Engine services cable connection (Only for 2959)

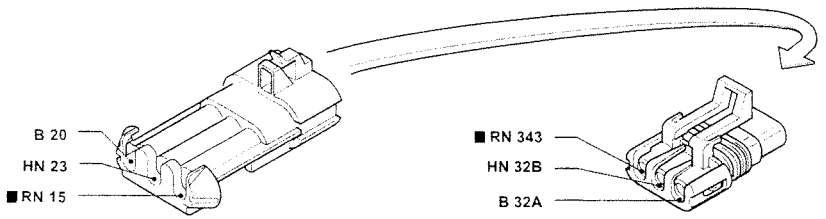

175 Connection between left longitudinal and tailgate cables

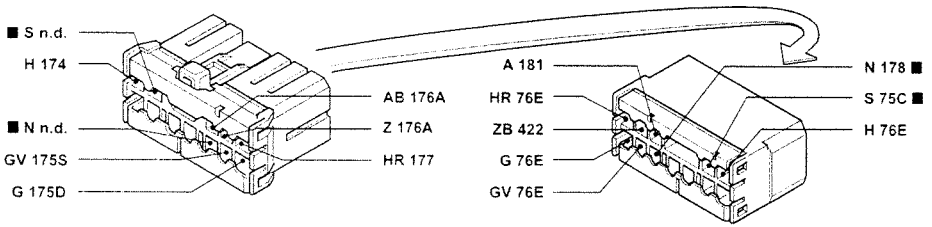

317 Connection between electronic auto. trans. and electronic injection cables (Only for 2959)

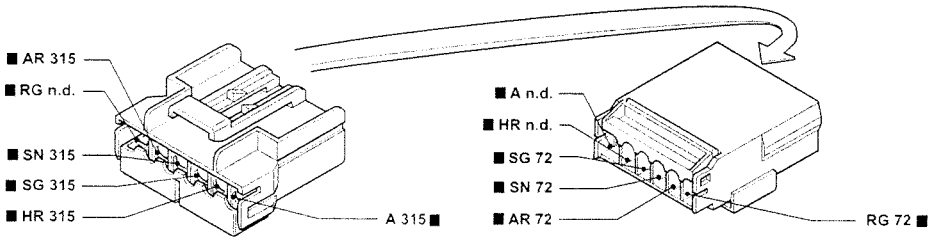

318 Connection between electronic automatic transmission and dashboard cables (Only for 2959)

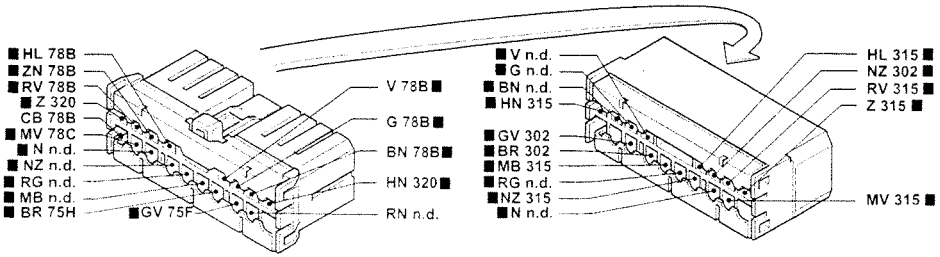

■ The cables in the wiring diagram are marked

P3U208I01

Version: 1998 20v - 2446 20v - 2956 V6 24v

Alarm device - (See key at end of wiring diagrams)

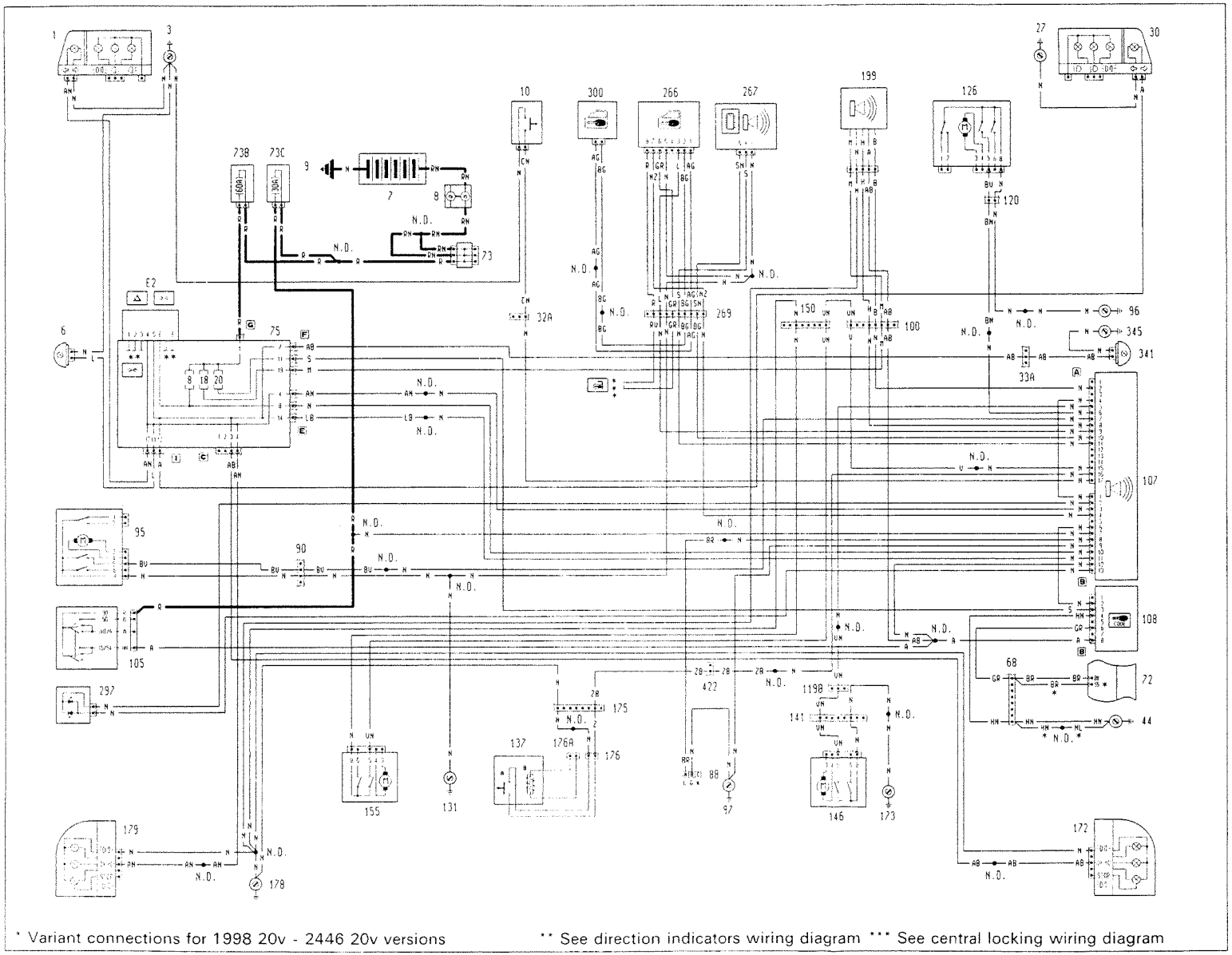

* Variant connections for 1998 20v - 2446 20v versions

** See direction indicators wiring diagram *** See central locking wiring diagram

P3U561Z01

3U2091

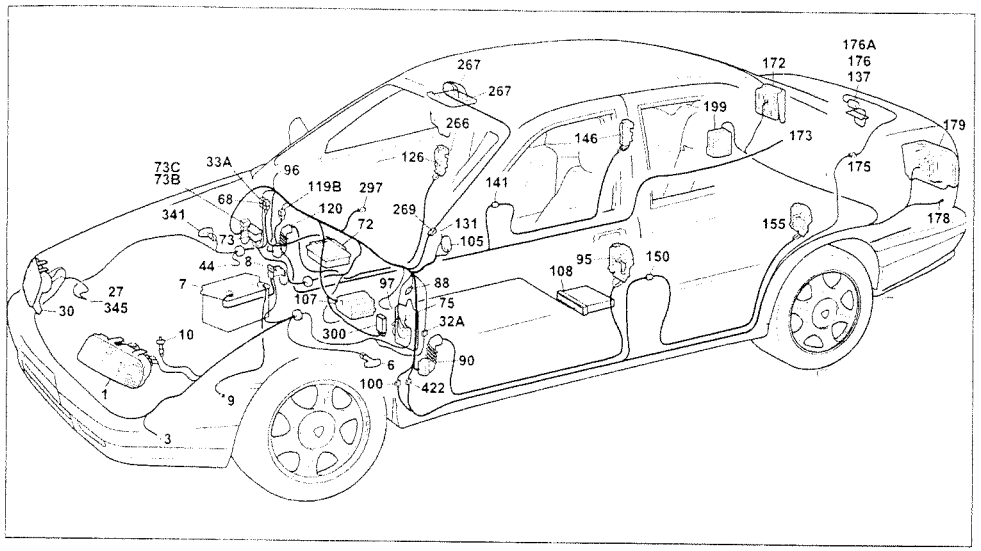

P3U211I01

1998/2446/2959 V6 Versions
Alarm device
Components key

1 Left front light cluster
3 Left front earth
6 Left side direction indicator
7 Battery
8 Main connector block
9 Earth on bodyshell
10 Button on bonnet lid for engaging alarm device
27 Right front earth
30 Right front light cluster
32A Connection between dash & left engine compartment cables
33A Connection between dash & right engine compartment cables
44 Power earth
68 Connection between dashboard and electronic injection cables
72 Fuel injection control unit
73 Secondary connector block
73B 60A protective fuse for I.G.E. control unit / junction unit
73C 30A fuse protecting ignition switch/alarm device
75 Junction unit (dashboard)
E2 Intermittent device for direction indicators / hazard warning lights
88 Diagnostic socket
90 Connection between dashboard and left front door cables
95 Left front central locking geared motor and signalling left front door open and alarm on
96 Earth on carrier
97 Earth on floor
100 Connection between dashboard and left longitudinal cables
105 Ignition switch
107 Alarm control unit
108 LANCIA CODE control unit
119B Connection between dashboard and right longitudinal cables
120 Connection between dashboard and right front door cables
126 Right front central locking geared motor and signalling right front door open and alarm on
131 Earth on steering column support
137 Tailgate lock assembly
A Switch for luggage compartment courtesy light and engaging alarm
141 Connection between right longitudinal and right rear door cables
146 Right rear door central locking geared motor and signalling right rear door open and alarm on
150 Connection between left longitudinal and left rear door cables
155 Left rear door central locking geared motor and signalling left rear door open and alarm on
172 Right rear light cluster on fixed section
173 Right rear earth
175 Connection between left longitudinal and tailgate cables
176 Tailgate cables connection
177 Left rear light cluster on moveable section
178 Left rear earth
179 Left rear light cluster on fixed section
199 Alarm siren
266 Infra red receiver for alarm device
267 Volumetric sensors for alarm device
269 Connection between dashboard and receiver cables
297 Alarm device warning light
300 Central locking electronic control unit
341 Right side direction indicator
345 Right front earth
422 Connection between dashboard and left longitudinal cables

N.D. Ultrasound welding taped in cable loom

120 Connection between dashboard and right front door cables

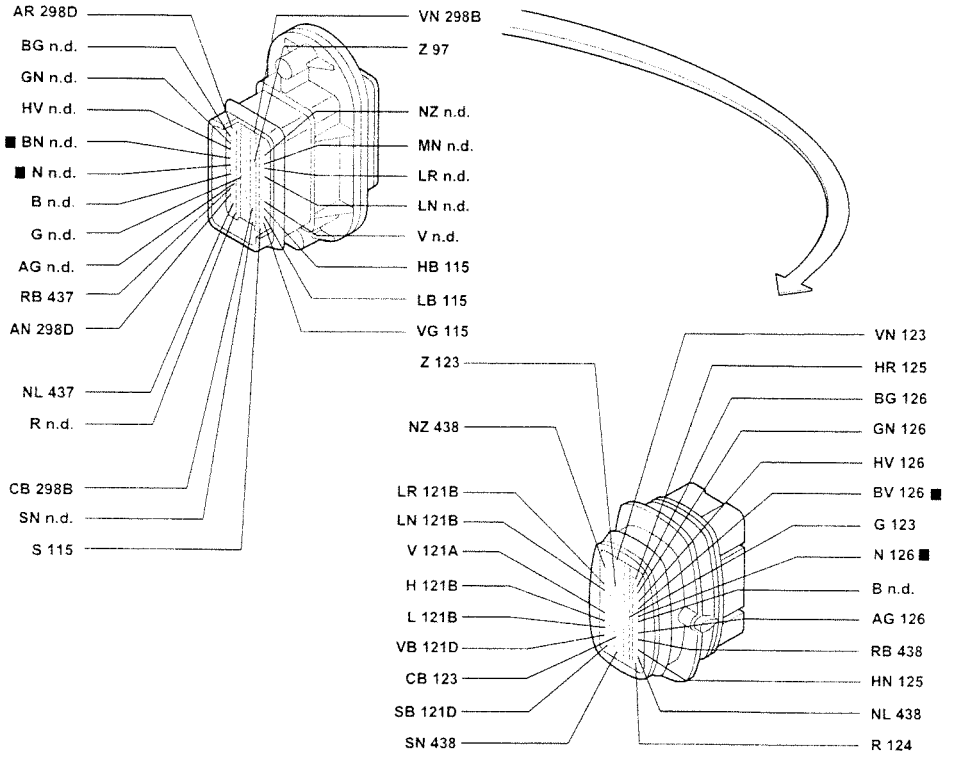

422 Connection between dashboard and left longitudinal cables

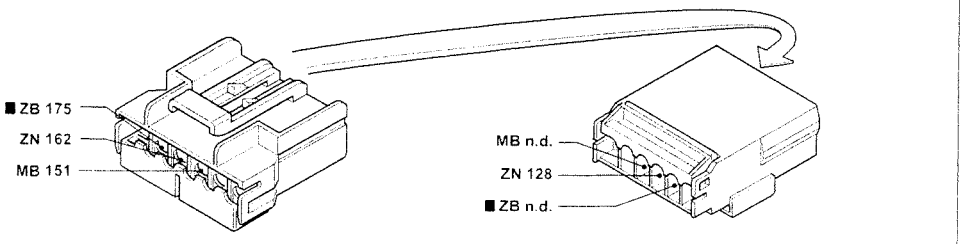

■ The cables in the wiring diagram are marked

P3U212I01

Version : 1995 16v Turbo - 1998 20v Turbo
Alarm device - (See key at end of wiring diagrams)

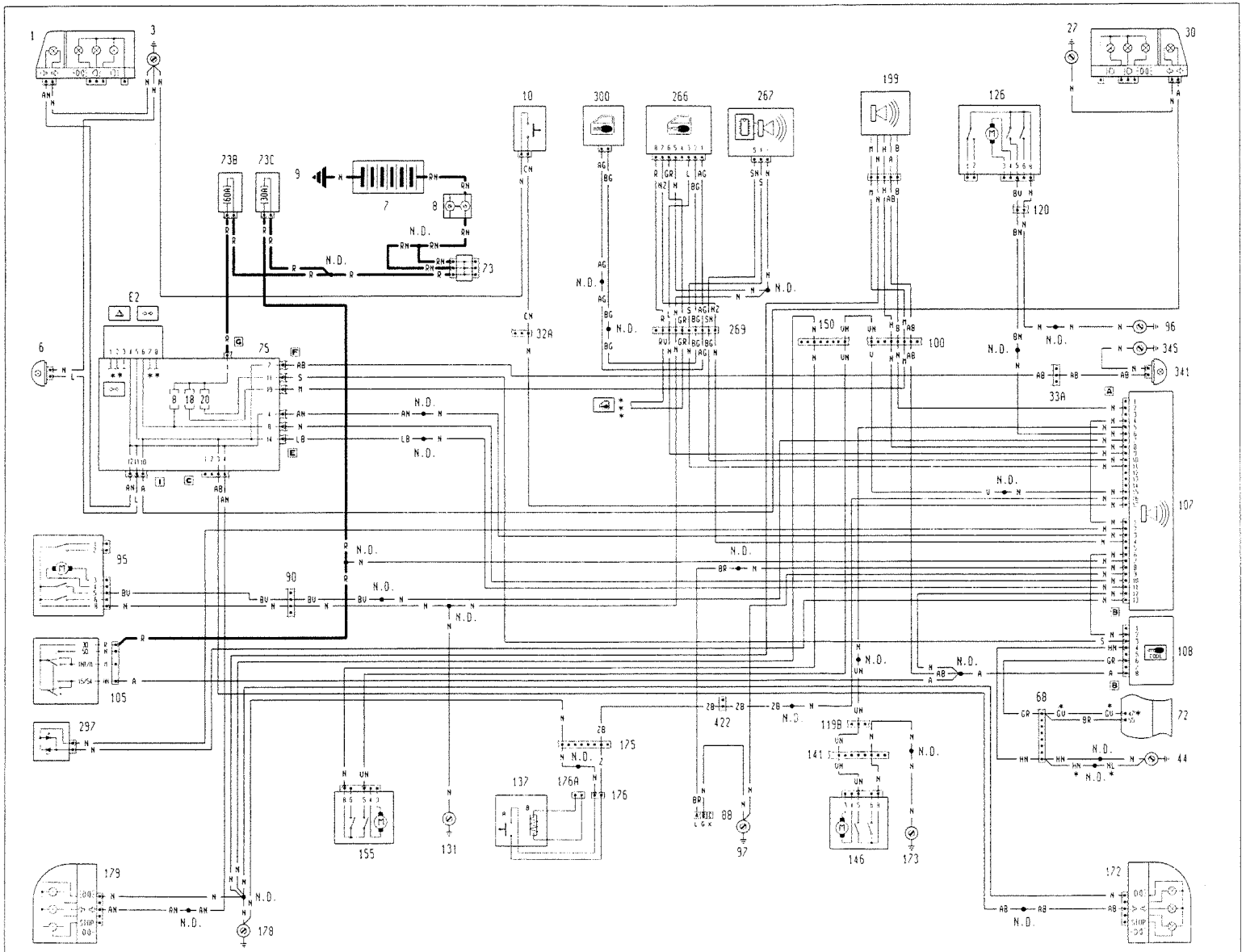

* Variant connections for the 1998 20v Turbo Version

** See direction indicators wiring diagram*** See central locking wiring diagram

P3U571Z01

3U213I

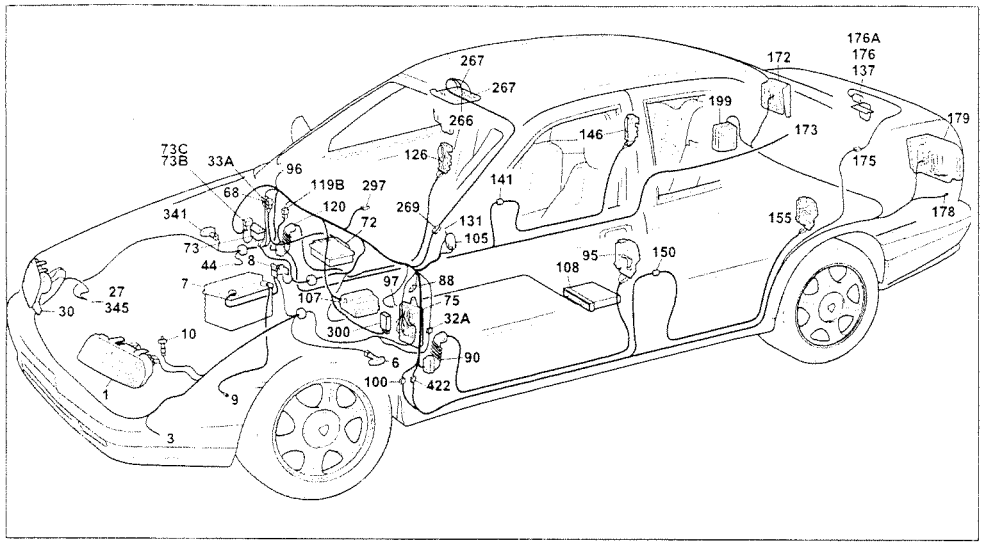

P3U215I01

1995 16v Turbo - 1998 20v Turbo Versions
Alarm device

Components key

1 Left front light cluster
3 Left front earth
6 Left side direction indicator
7 Battery
8 Main connector block
9 Earth on bodyshell
10 Button on bonnet lid for switching on alarm device
27 Right front earth
30 Right front light cluster
32A Connection between dash & left engine compartment cables
33A Connection between dash & right engine compartment cables
44 Power earth
68 Connection between dashboard and electronic injection cables
72 Fuel injection control unit
73 Secondary connector block
73B 60A protective fuse for I.G.E. control unit / junction unit
73C 30A fuse protecting ignition switch/alarm device
75 Junction unit (dashboard)
E2 Intermittent device for direction indicators / hazard warning lights
88 Diagnostic socket
90 Connection between dashboard and left front door cables
95 Left front central locking geared motor and signalling left front door open and alarm on
96 Earth on carrier
97 Earth on floor
100 Connection between dashboard and left longitudinal cables
105 Ignition switch
107 Alarm control unit
108 LANCIA-CODE control unit
119B Connection between dashboard and right longitudinal cables
120 Connection between dashboard and right front door cables
126 Right front central locking geared motor and signalling right front door open and alarm on
131 Earth on steering column support
137 Tailgate lock assembly
A Luggage compartment courtesy light switch and alarm on
141 Connection between right longitudinal and right rear door cables
146 Right rear door central locking geared motor and signalling right rear door open and alarm on
150 Connection between left longitudinal and left rear door cables
155 Left rear door central locking geared motor and signalling left rear door open and alarm on
172 Right rear light cluster on fixed section
173 Right rear earth
175 Connection between left longitudinal and tailgate cables
176 Tailgate cables connection
177 Left rear light cluster on moveable section
178 Left rear earth
179 Left rear light cluster on fixed section
199 Alarm siren
266 Infra red receiver for alarm device
267 Volumetric sensors for alarm device
269 Connection between dashboard and receiver cables
297 Alarm device warning light
300 Central locking electronic control unit
341 Right side direction indicator
345 Right front earth
422 Connection between dashboard and left longitudinal cables

N.D. Ultrasound welding taped in cable loom

141 Connection between right longitudinal and right rear door cables

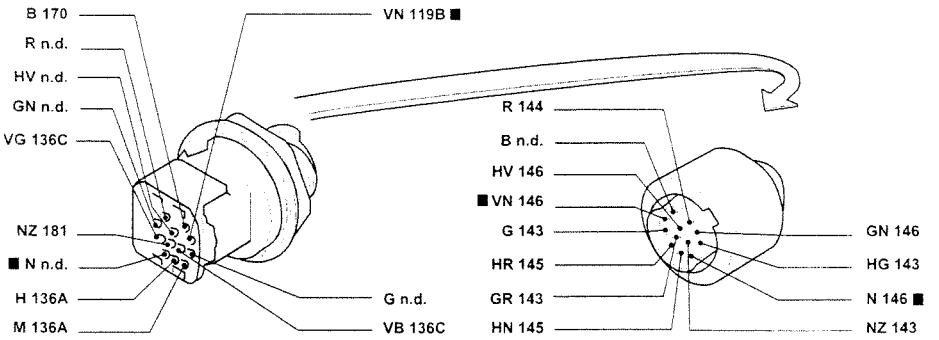

150 Connection between left longitudinal and left rear door cables

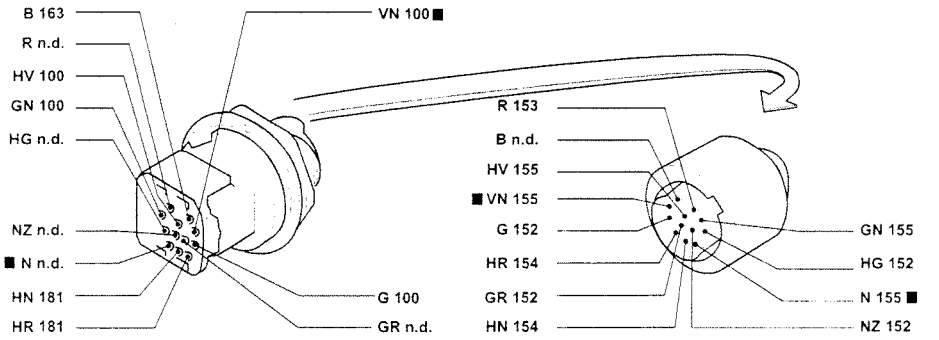

■ The cables in the wiring diagram are marked

P3U216I01

Version: 2387 TD - 2387 JTD
Alarm device- (See key at end of wiring diagrams)

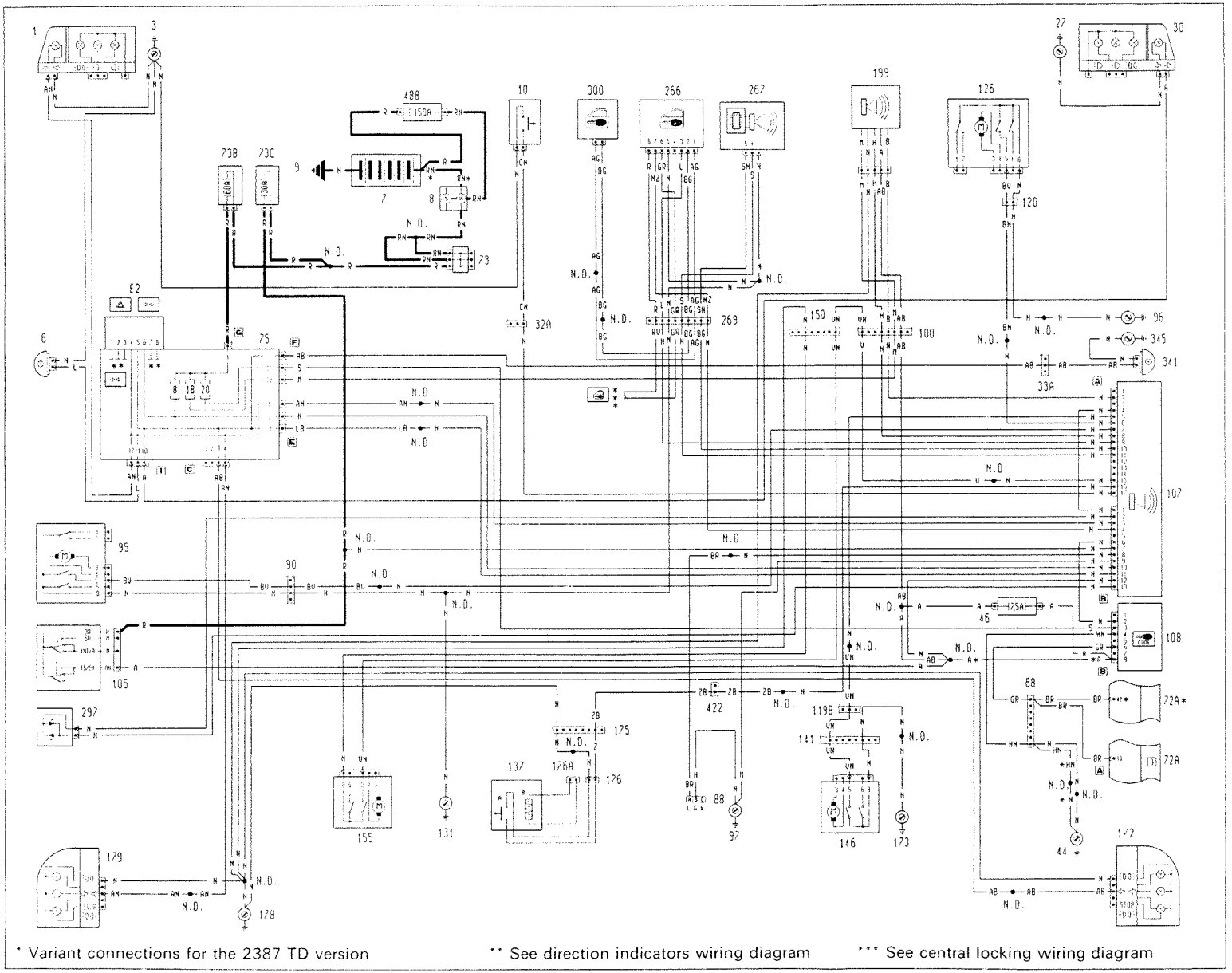

* Variant connections for the 2387 TD version

** See direction indicators wiring diagram

*** See central locking wiring diagram

P3U581Z01

3U2171

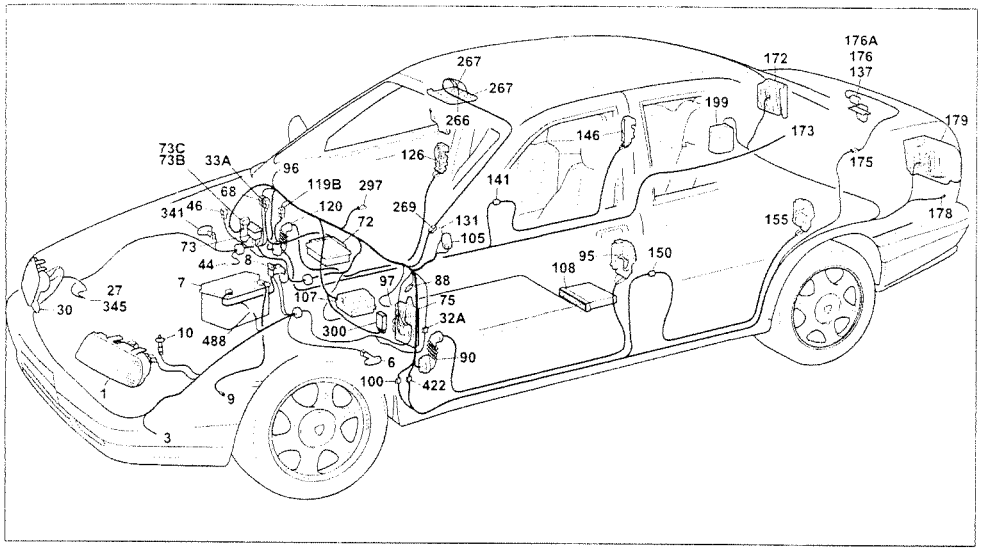

P3U219101

2387 TD - 2387 JTD Versions
Alarm device

Components key

1 Left front light cluster
3 Left front earth
6 Left side direction indicator
7 Battery
8 Main connector block
9 Earth on bodyshell
10 Button on bonnet lid for engaging alarm device
27 Right front earth
30 Right front light cluster
32A Connection between dash. & left engine compartment cables
33A Connection between dash. & right engine compartment cables
44 Power earth
46 7.5A fuse protecting electronic injection and Lancia CODE control unit
68 Connection between dashboard and electronic injection cables
72A Fuel pump control unit
73 Secondary connector block
73B 60A protective fuse for I.G.E. control unit / junction unit
73C 30A fuse protecting ignition switch/alarm device

75 Junction unit (dashboard)
F2 Intermittent device for direction indicators / hazard warning lights
88 Diagnostic socket
90 Connection between dashboard and left front door cables
95 Left front central locking geared motor and signalling left front door open and alarm on
96 Earth on carrier
97 Earth on floor
100 Connection between dashboard and left longitudinal cables
107 Alarm control unit
108 LANCIA CODE control unit
119B Connection between dashboard and right longitudinal cables
120 Connection between dashboard and right front door cables

126 Right front central locking geared motor and signalling right front door open and alarm on
126 Right front central locking geared motor and signalling right front door open and alarm on
131 Earth on steering column support
137 Tailgate lock assembly
A Switch for luggage compartment courtesy light and engaging alarm
141 Connection between right longitudinal and right rear door cables
146 Right rear door central locking geared motor and signalling right rear door open and alarm on
150 Connection between left longitudinal and left rear door cables

155 Left rear door central locking geared motor and signalling left rear door open and alarm on
172 Right rear light cluster on fixed section
173 Right rear earth
175 Connection between left longitudinal and tailgate cables
176 Tailgate cables connection
177 Left rear light cluster on moveable section
178 Left rear earth
179 Left rear light cluster on fixed section
199 Alarm siren
266 Infra red receiver for alarm device
267 Volumetric sensors for alarm device
269 Connection between dashboard and receiver cables
297 Alarm device warning light
300 Central locking electronic control unit
341 Right side direction indicator
345 Right front earth
422 Connection between dashboard and left longitudinal cables
488 150A maxi fuse
N.D. Ultrasound welding taped in cable loom

100 Connection between dashboard and left longitudinal cables

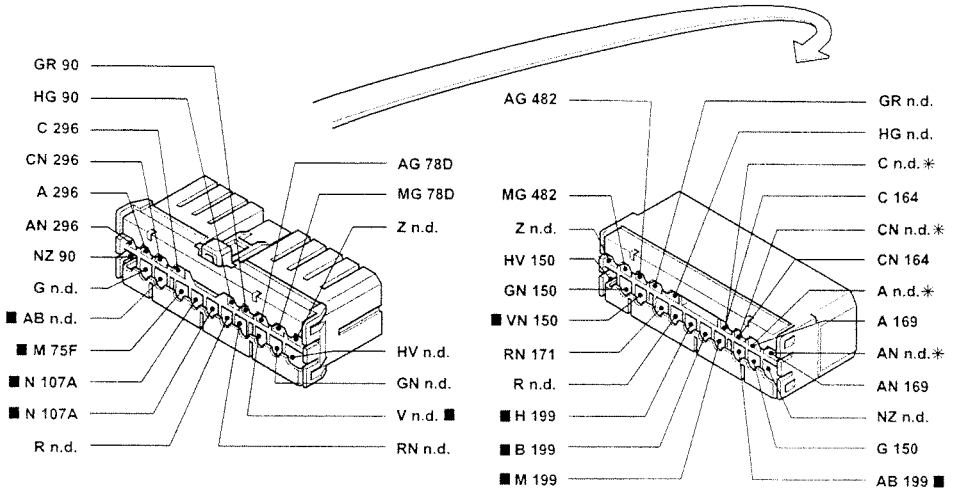

* Variant connection for Station Wagon versions

119B Connection between dashboard and right longitudinal cables

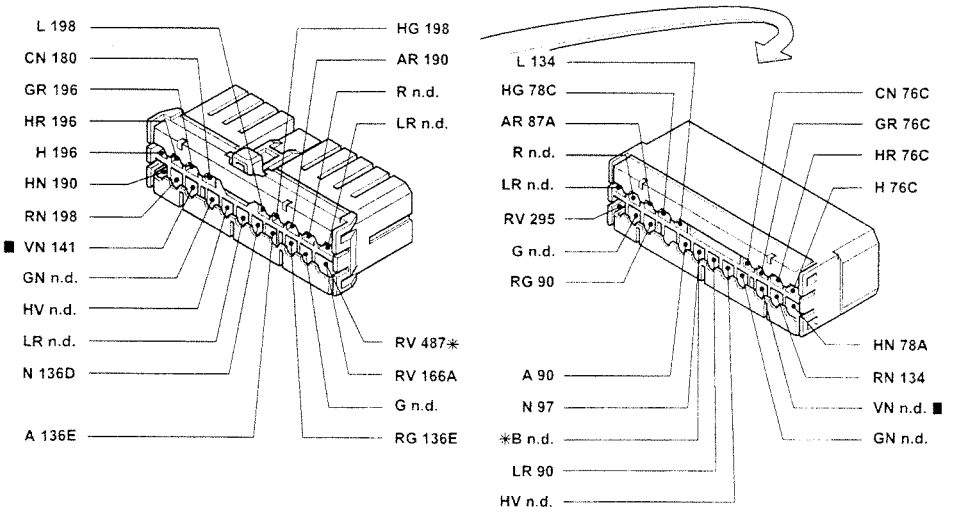

* Variant connection for Station Wagon versions

■ The cables in the wiring diagram are marked

P3U220101

Version: 2446 20v - 2959 V6 24v
Alarm device - (See key at end of wiring diagrams)

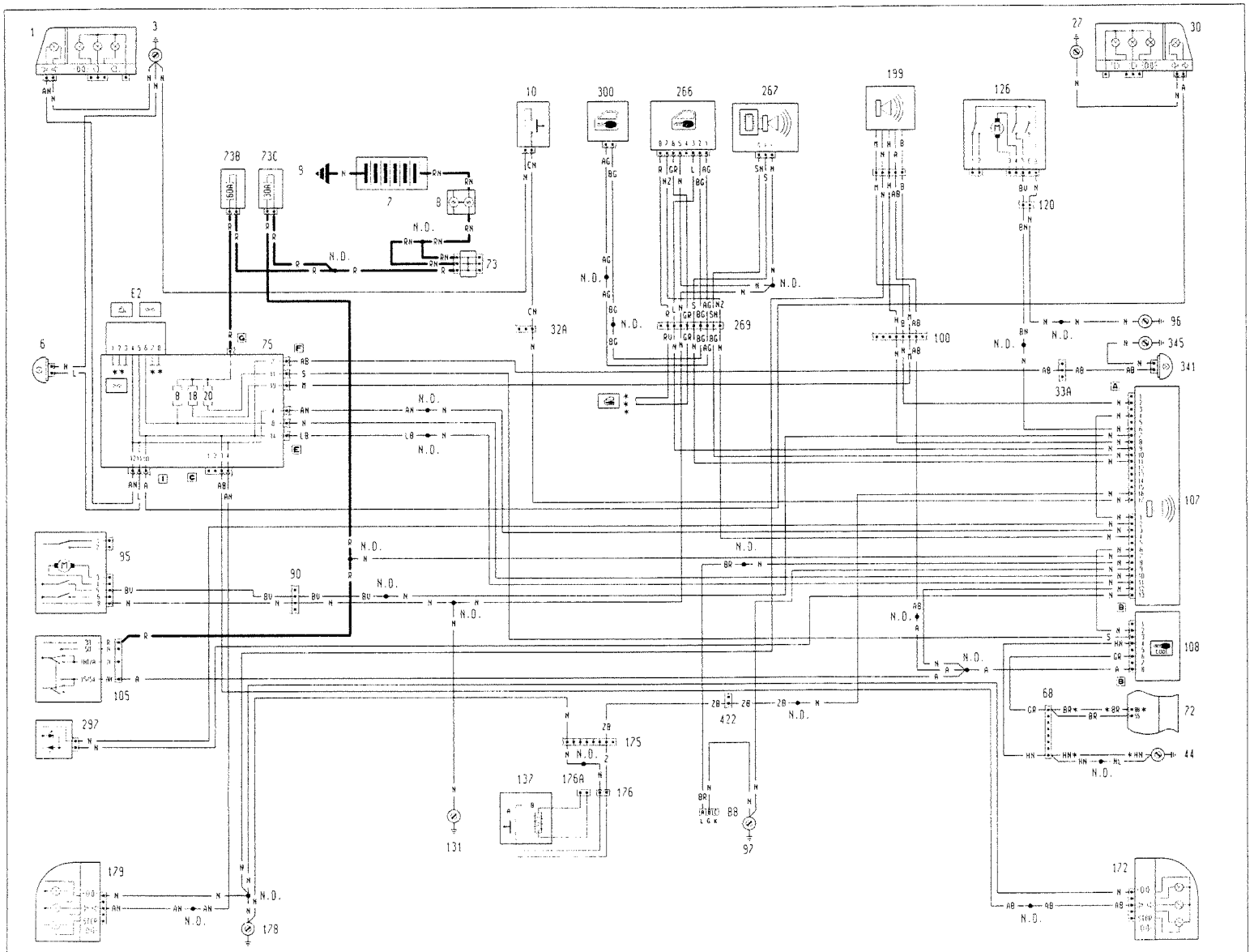

* Variant connections for the 2959 V6 24v version ** See direction indicators wiring diagram for saloon versino *** See central locking wiring diagram

P3U59IZ01

3U2211

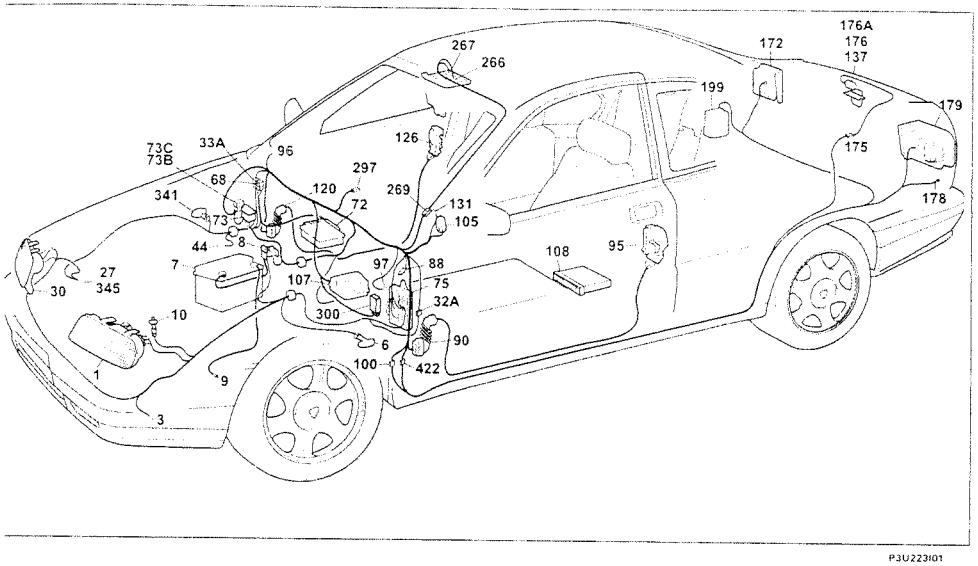

P3U223I01

1446 / 2959 V6 Versions
Alarm device

Components key

1 Left front light cluster
3 Left front earth
6 Left side direction indicator
7 Battery
8 Main connector block
9 Earth on bodyshell
10 Button on bonnet lid for engaging alarm device
27 Right front earth
30 Right front light cluster
32A Connection between dashboard and left engine compartment cables
33A Connection btwn dash. & right engine comp. cables
44 Power earth
68 Connection between dashboard and electronic injection cables
72 Fuel injection control unit
73 Secondary connector block
73B 60A protective fuse for I.G.E. control unit / junction unit
73C 30A fuse protecting ignition switch/alarm device
75 Junction unit (dashboard)
E2 Intermittent device for direction indicators / hazard warning lights
88 Diagnostic socket
90 Connection between dashboard and left front door cables
95 Left front central locking geared motor and signalling left front door open and alarm on
96 Earth on carrier
97 Earth on floor
100 Connection between dashboard and left longitudinal cables
105 Ignition switch
107 Alarm control unit
108 LANCIA-CODE control unit
120 Connection between dashboard and right front door cables
126 Right front central locking geared motor and signalling right front door open and alarm on
131 Earth on steering column support
137 Tailgate lock assembly
A Switch for luggage compartment courtesy light and engaging alarm
172 Right rear light cluster on fixed section
175 Connection between left longitudinal and tailgate cables
176 Tailgate cables connection
177 Left rear light cluster on moveable section
178 Left rear earth
179 Left rear light cluster on fixed section
199 Alarm siren
266 Infra red receiver for alarm device
267 Volumetric sensors for alarm device
269 Connection between dashboard and receiver cables
297 Alarm device warning light
300 Central locking electronic control unit
341 Right side direction indicator
345 Right front earth
422 Connection between dashboard and left longitudinal cables

N.D. Ultrasound welding taped in cable loom

120 Connection between dashboard and right front door cables

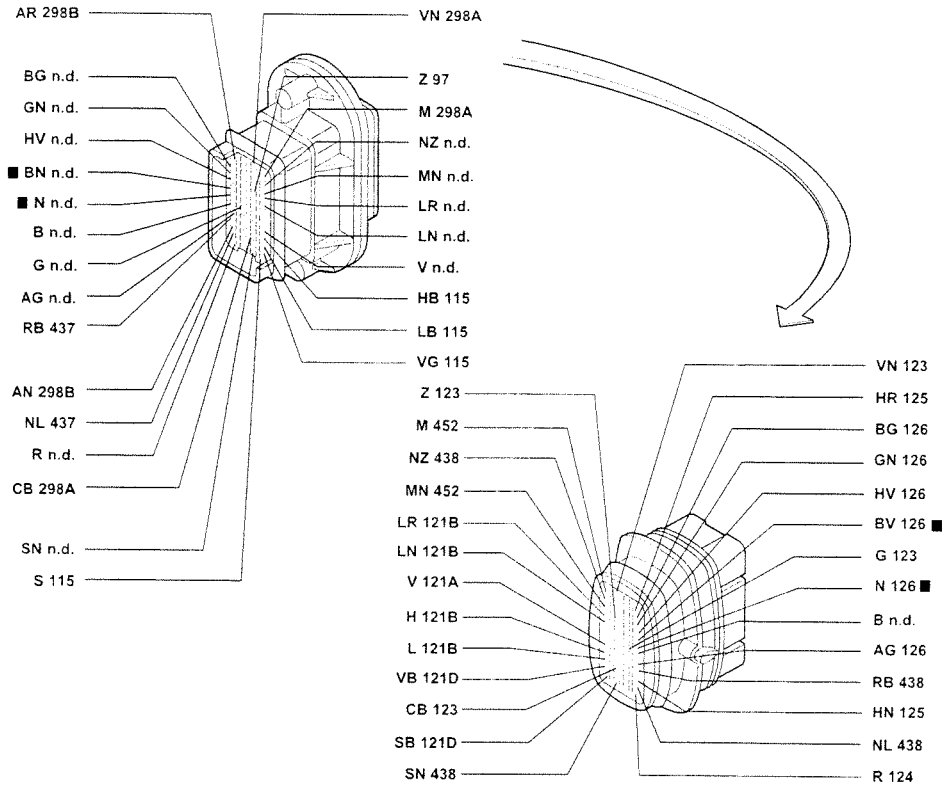

422 Connection between dashboard and left longitudinal cables

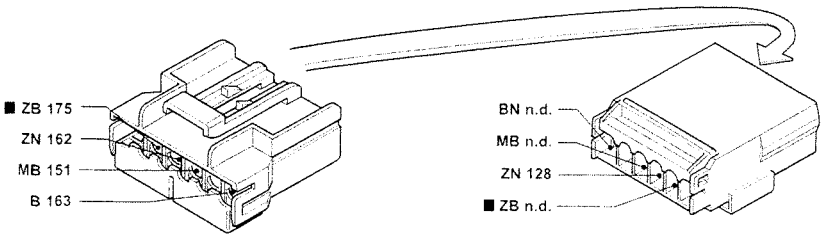

P3U224I01

■ The cables in the wiring diagram are marked

Version: 1995 16v Turbo - 1998 20v Turbo
Alarm device - (See key at end of wiring diagrams)

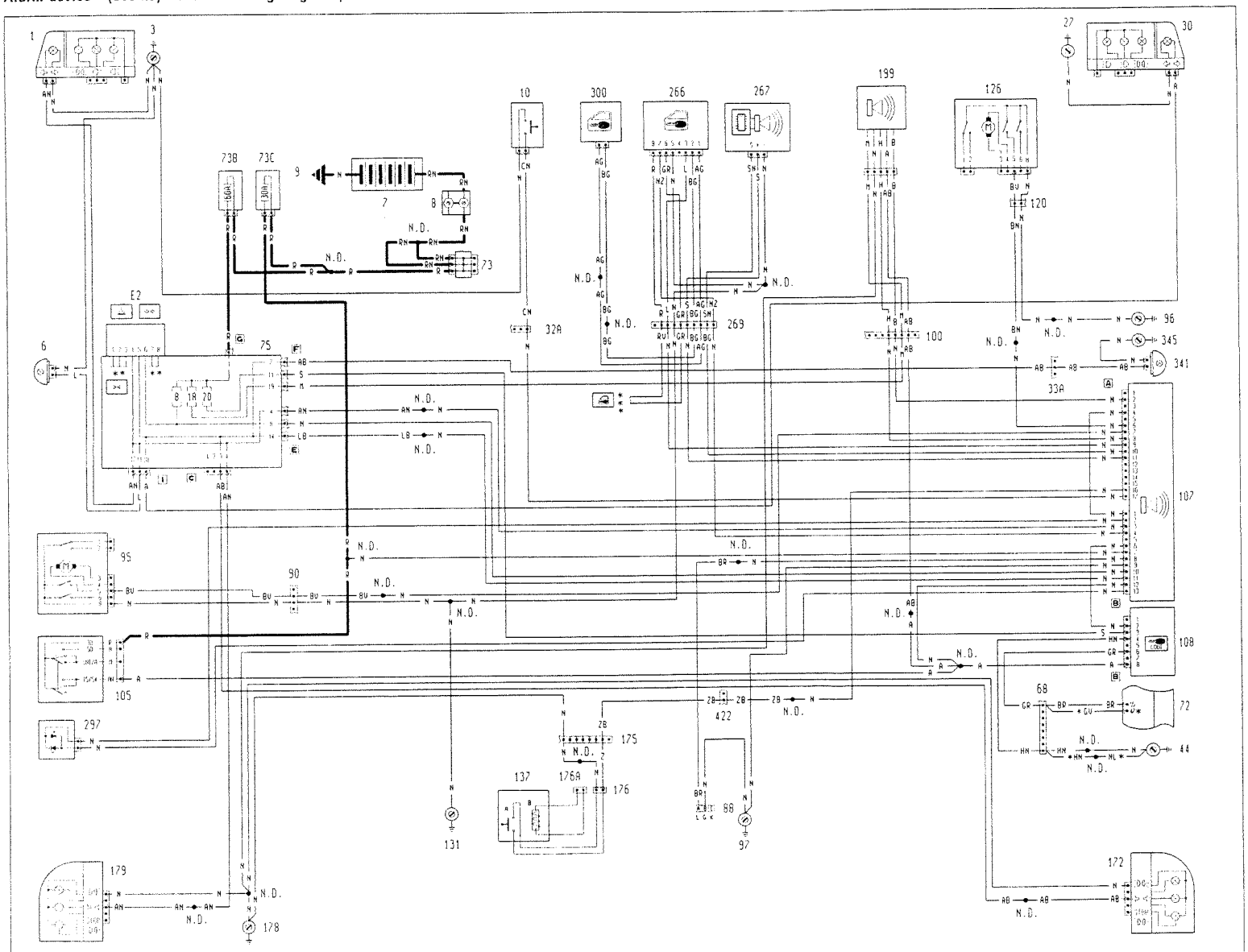

* Variant connections for the 1998 20v Turbo Version ** See direction indicators wiring diagram for saloon version *** See central locking wiring diagram

P3U60IZ01

3U225I

Copyright by Fiat Auto

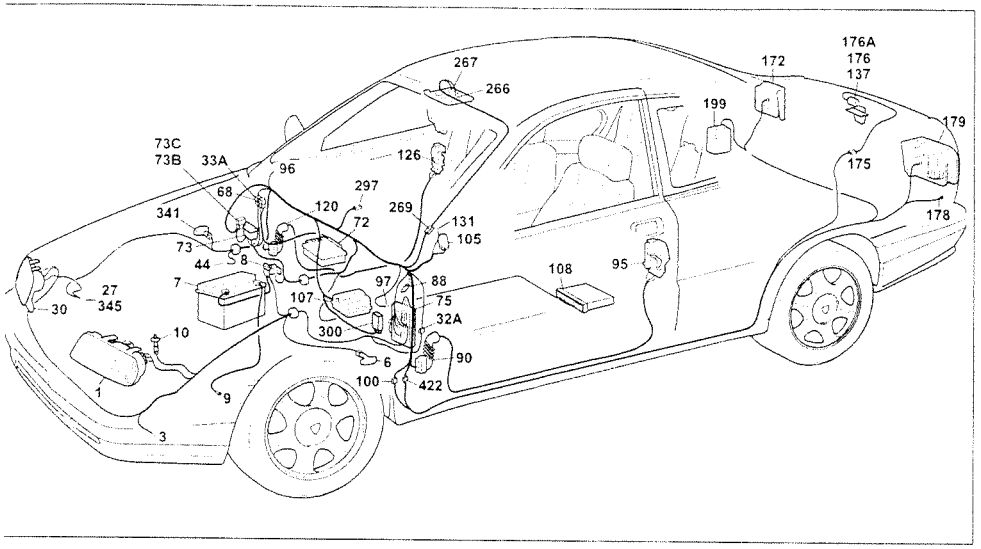

P3U227I01

995 16v Turbo /1998 20v Turbo Versions
Alarm device

Components key

1 Left front light cluster
3 Left front earth
6 Left side direction indicator
7 Battery
8 Main connector block
9 Earth on bodyshell
10 Button on bonnet lid for engaging alarm device
27 Right front earth
30 Right front light cluster
32A Connection between dashboard and left engine compartment cables
33A Connection between dash. & right engine comp. cables
44 Power earth
68 Connection between dashboard and electronic injection cables
72 Fuel injection control unit
73 Secondary connector block
73B 60A protective fuse for I.G.E. control unit / junction unit
73C 30A fuse protecting ignition switch/anti-theft device
75 Junction unit (dashboard)
E2 Intermittent device for direction indicators / hazard warning lights
88 Diagnostic socket
90 Connection between dashboard and left front door cables
95 Left front central locking geared motor and signalling left front door open and alarm on
96 Earth on carrier
97 Earth on floor
100 Connection between dashboard and left longitudinal cables
105 Ignition switch
107 Alarm control unit
108 LANCIA-CODE control unit
120 Connection between dashboard and right front door cables
126 Right front central locking geared motor and signalling right front door open and alarm on
131 Earth on steering column support
137 Tailgate lock assembly
A Switch for luggage compartment courtesy light and engaging alarm
172 Right rear light cluster on fixed section
175 Connection between left longitudinal and tailgate cables
176 Tailgate cables connection
177 Left rear light cluster on moveable section
178 Left rear earth
179 Left rear light cluster on fixed section
199 Alarm siren
266 Infra red receiver for alarm device
267 Volumetric sensors for alarm device
269 Connection between dash. and receiver cables
297 Alarm device warning light
300 Central locking electronic control unit
341 Right side direction indicator
345 Right front earth
422 Connection between dashboard and left longitudinal cables

N.D. Ultrasound welding taped in cable loom

100 Connection between dashboard and left longitudinal cables

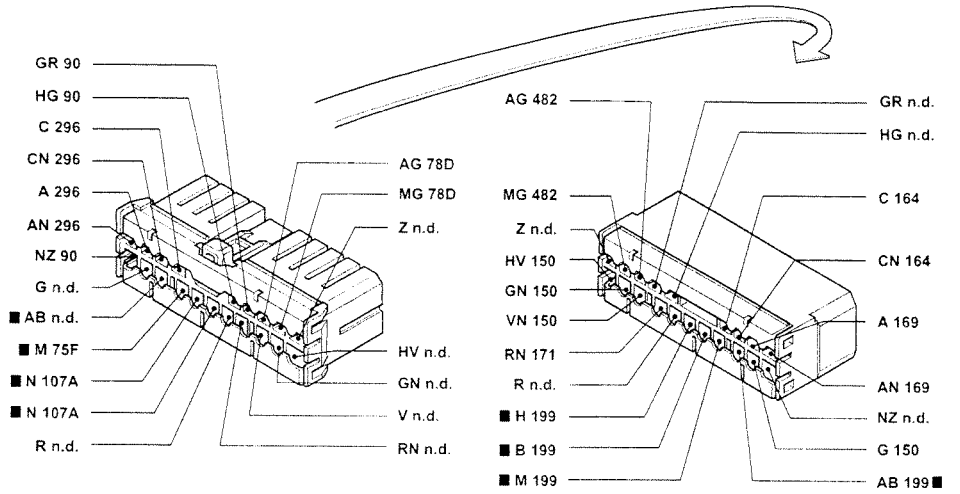

175 Connection between left longitudinal and tailgate cables

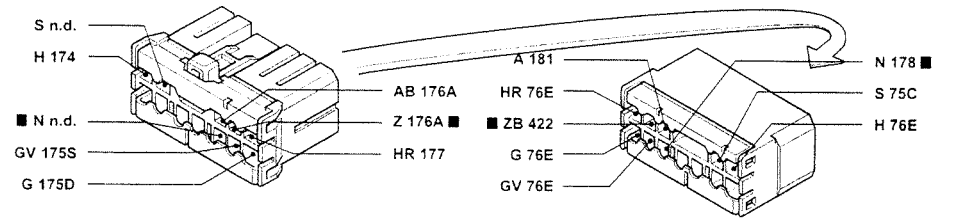

422 Connection between dashboard and left longitudinal cables (Only for COUPE' versions)

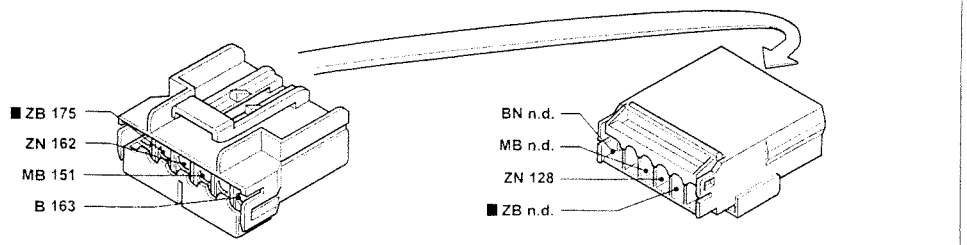

■ The cables in the wiring diagram are marked

P3U228I01

Petrol versions
Complete Infocenter - (See key at end of wiring diagrams)

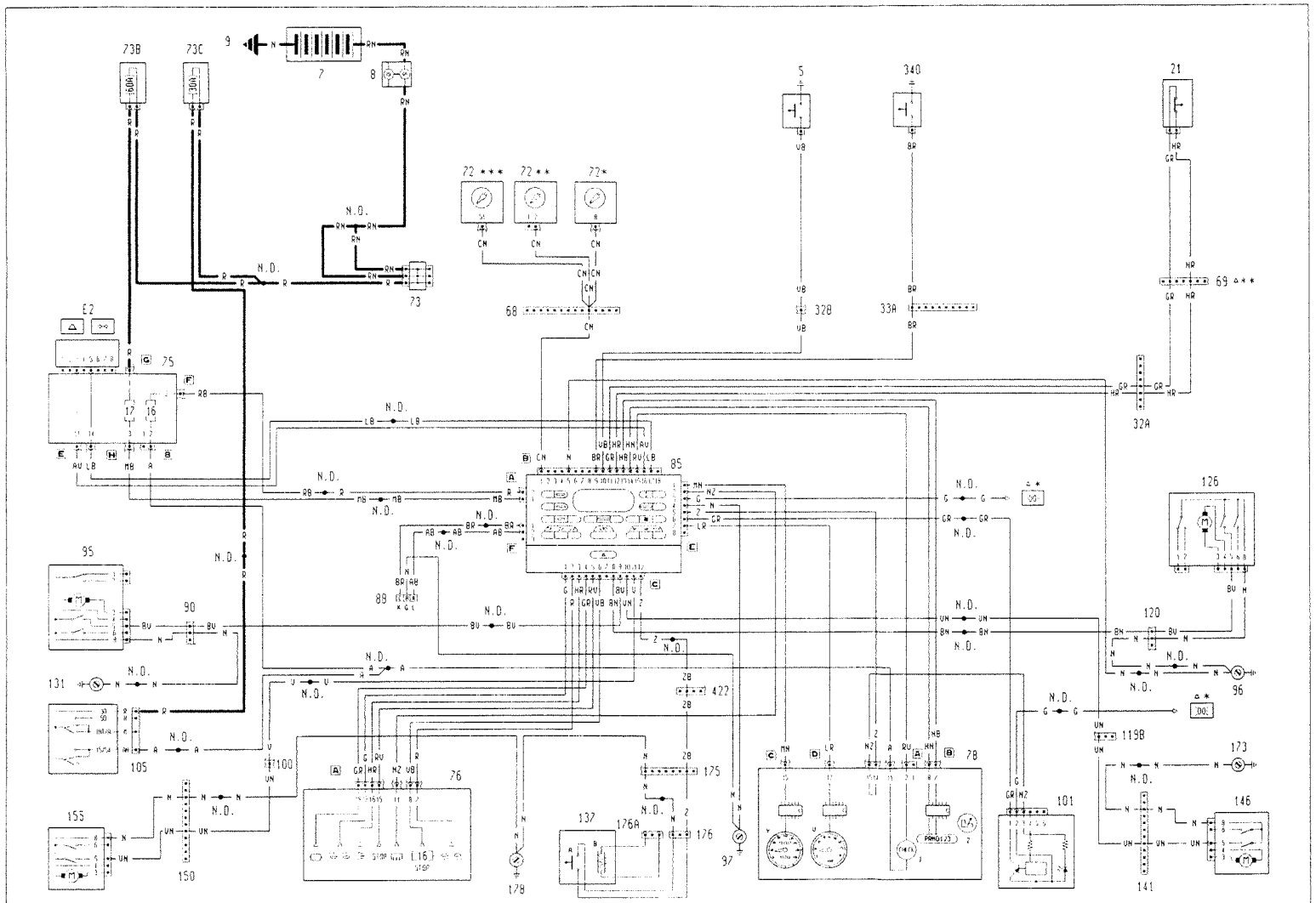

* Variant connections for the 2959 V6 24v version
** Variant connections for the 1995 16v Turbo version
*** Variant connections for the 1998 20v Turbo - 1998 20v - 2446 20v versions
* ▲ See ideogram lights wiring diagram
** ▲ Non existent for the 1995 16v Turbo - 1998 20v Turbo - 2959 V6 24v versions

P3U61IZ01

3U229I

Copyright by Fiat Auto

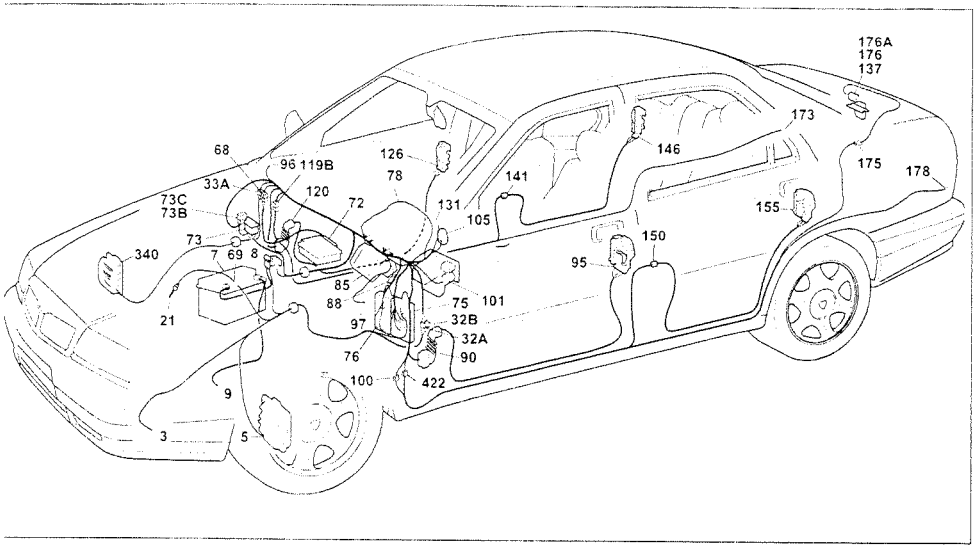

P3U231I01

Petrol versions
Complete Infocenter

Components key

3 Left front earth
5 Left front brake pad wear sensor
7 Battery
8 Main connector block
9 Earth on bodyshell
21 Minimum engine oil level sensor
32A Connection between dash. & left engine compartment cables
32B Connection between dash. & left engine compartment cables
33A Connection between dash. & right engine comp. cables
68 Connection between dashboard and electronic injection cables
69 Engine services cable connection
72 Fuel injection control unit
73 Secondary connector block
73B 60A protective fuse for I.G.E. control unit / junction unit
73C 30A fuse protecting ignition switch/anti theft device

75 Junction unit (dashboard)
E2 Intermittent device for direction indicators / hazard warning lights
76 I.G.E. control unit
78 Instrument panel
I Check summary warning light
U Electronic rev counter
Y Electronic tachometer
Z Electronic automatic transmission gear selection display
85 Infocenter control unit
88 Diagnostic socket
90 Connection between dashboard and left front door cables
95 Left front central locking geared motor and signalling left front door open and anti-theft device on

96 Earth on carrier
97 Earth on floor
100 Connection between dash. & left longitudinal cables
101 Light dimmer
105 Ignition switch
119B Connection between dashboard and right longitudinal cables
120 Connection between dashboard and right front door cables
126 Right front central locking geared motor and signalling right front door open and anti-theft device on
131 Earth on steering column support
137 Tailgate lock assembly
A Switch for luggage compartment courtesy light and enaging anti-theft device
141 Connection between right longitudinal and right rear door cables

146 Right rear door central locking geared motor and signalling right rear door open and anti-theft device on
150 Connection between left longitudinal and left rear door cables

155 Left rear door central locking geared motor and signalling left rear door open and anti-theft device on
173 Right rear earth
175 Connection between left longitudinal and tailgate cables
176 Tailgate cables connection
178 Left rear earth
340 Right front brake pad wear sensor
343 40A starter relay
422 Connection between dashboard and left longitudinal cables

N.D. Ultrasound welding taped in cable loom

141 Connection between right longitudinal and right rear door cables

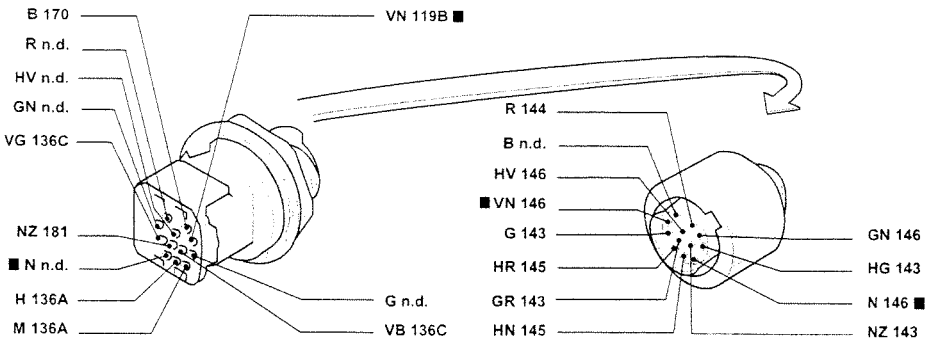

150 Connection between left longitudinal and left rear door cables

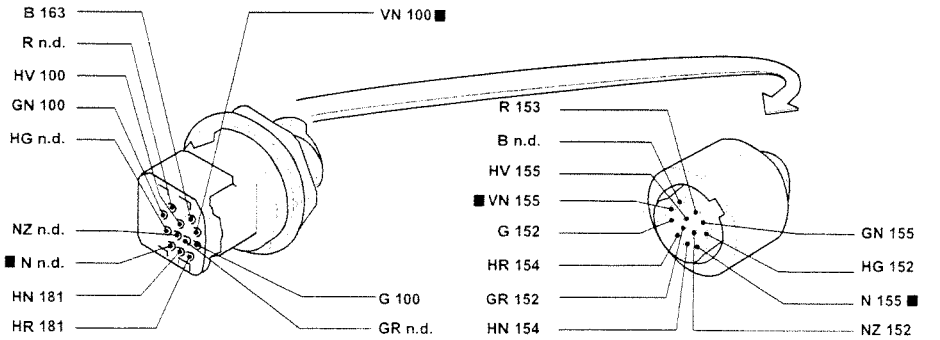

■ The cables in the wiring diagram are marked

P3U232I01

TD versions
Complete Infocenter - (See key at end of wiring diagrams)

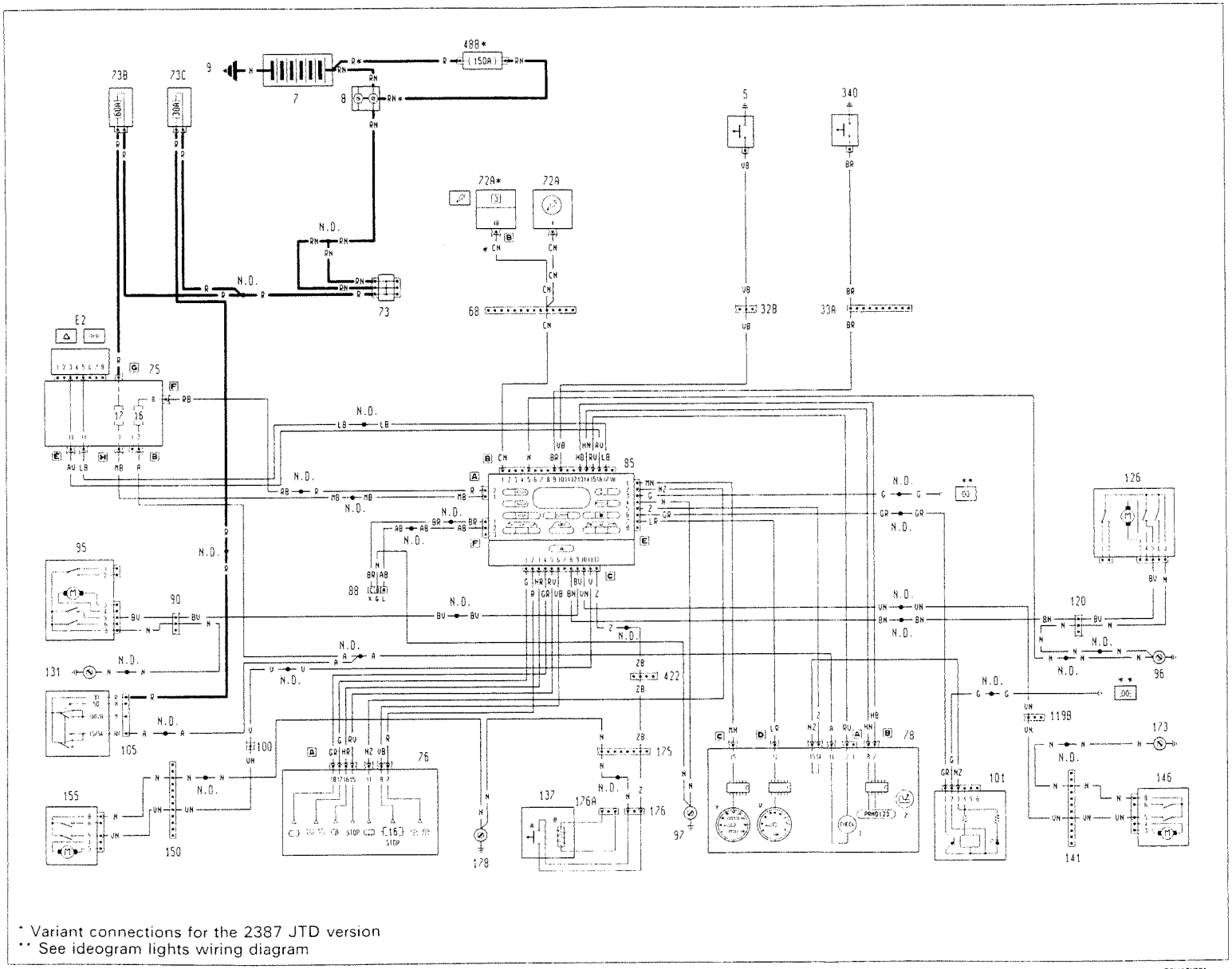

* Variant connections for the 2387 JTD version
** See ideogram lights wiring diagram

P3U621Z01

3U2331

Copyright by Fiat Auto

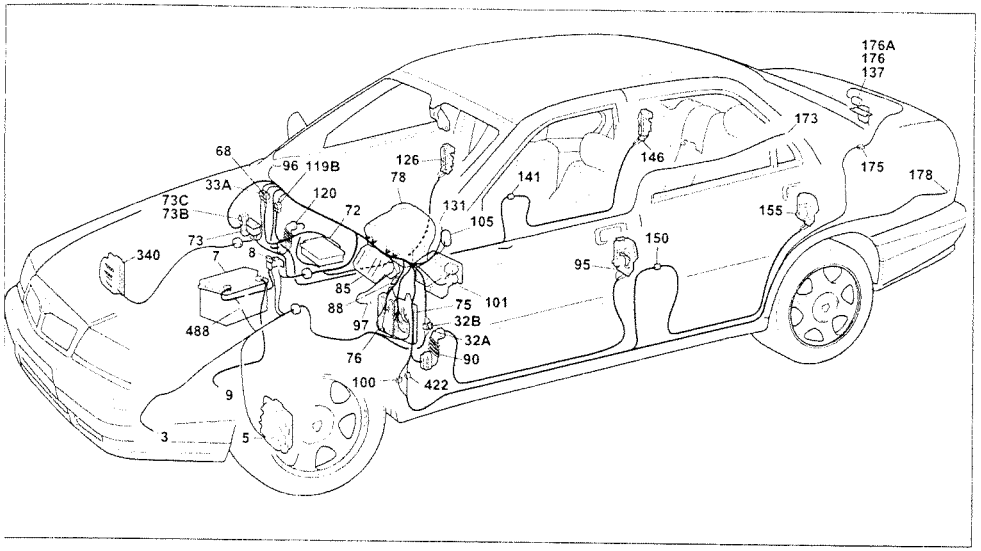

P3U235I01

Diesel versions
Complete Infocenter

Components key

3 Left front earth
5 Left front brake pad wear sensor
7 Battery
8 Main connector block
9 Earth on bodyshell
12B Connection between dash & left engine compartment cables
13A Connection between dash & right engine compartment cables
68 Connection between dashboard and electronic injection cables
72A Fuel pump electronic control unit
73 Secondary connector block
73B 60A protective fuse for I.G.E. control unit / junction unit
73C 30A fuse protecting ignition switch/anti-theft device

75 Junction unit (dashboard)
E2 Intermittent device for direction indicators / hazard warning lights
76 I.G.E. control unit
78 Instrument panel
I Check summary warning light
U Electronic rev counter
Y Electronic tachometer
Z Electronic automatic transmission gear selection display
85 Infocenter control unit
88 Diagnostic socket
90 Connection between dashboard and left front door cables
95 Left front central locking geared motor and signalling left front door open and anti-theft device on
96 Earth on carrier
97 Earth on floor

100 Connection between dashboard and left longitudinal cables
101 Light dimmer
105 Ignition switch
119B Connection between dashboard and right longitudinal cables
120 Connection between dashboard and right front door cables
126 Right front central locking geared motor and signalling right front door open and anti-theft device on
131 Earth on steering column support
137 Tailgate lock assembly
A Switch for luggage compartment courtesy light and engaging anti-theft device
141 Connection between right longitudinal and right rear door cables

146 Right rear door central locking geared motor and signalling right rear door open and anti-theft device on
150 Connection between left longitudinal and left rear door cables

155 Left rear door central locking geared motor and signalling left rear door open and anti-theft device on
173 Right rear earth
175 Connection between left longitudinal and tailgate cables
176 Tailgate cables connection
178 Left rear earth
340 Right front brake pad wear sensor
343 40A starter relay
422 Connection between dashboard and left longitudinal cables
488 150A maxi fuse

N.D. Ultrasound welding taped in cable loom

141 Connection between right longitudinal and right rear door cables

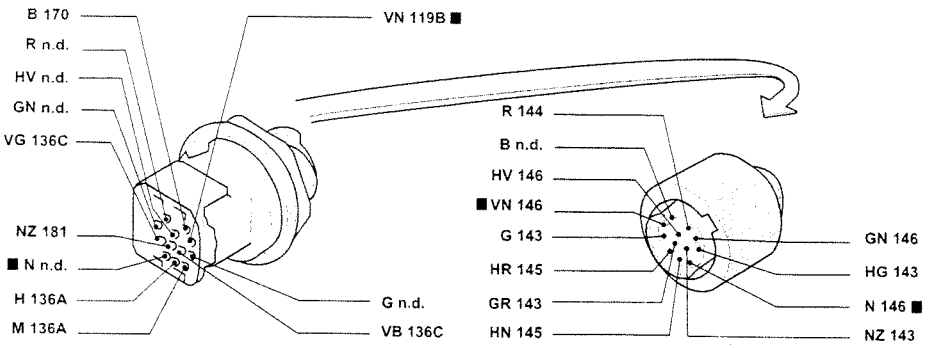

150 Connection between left longitudinal and left rear door cables

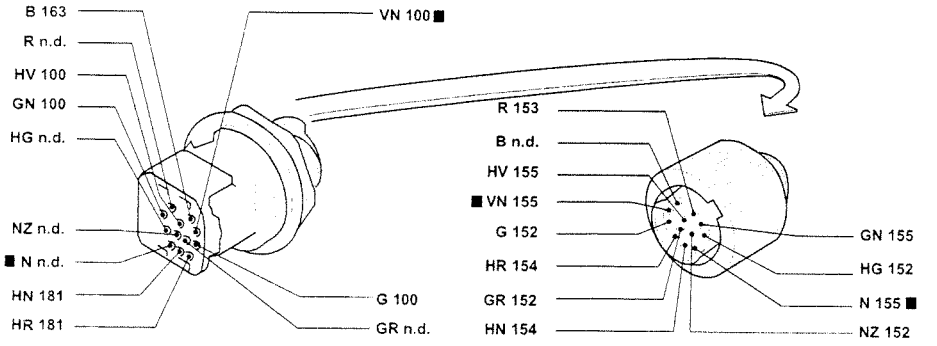

■ The cables in the wiring diagram are marked

P3U236I01

Petrol versions
Complete Infocenter - (See key at end of wiring diagrams)

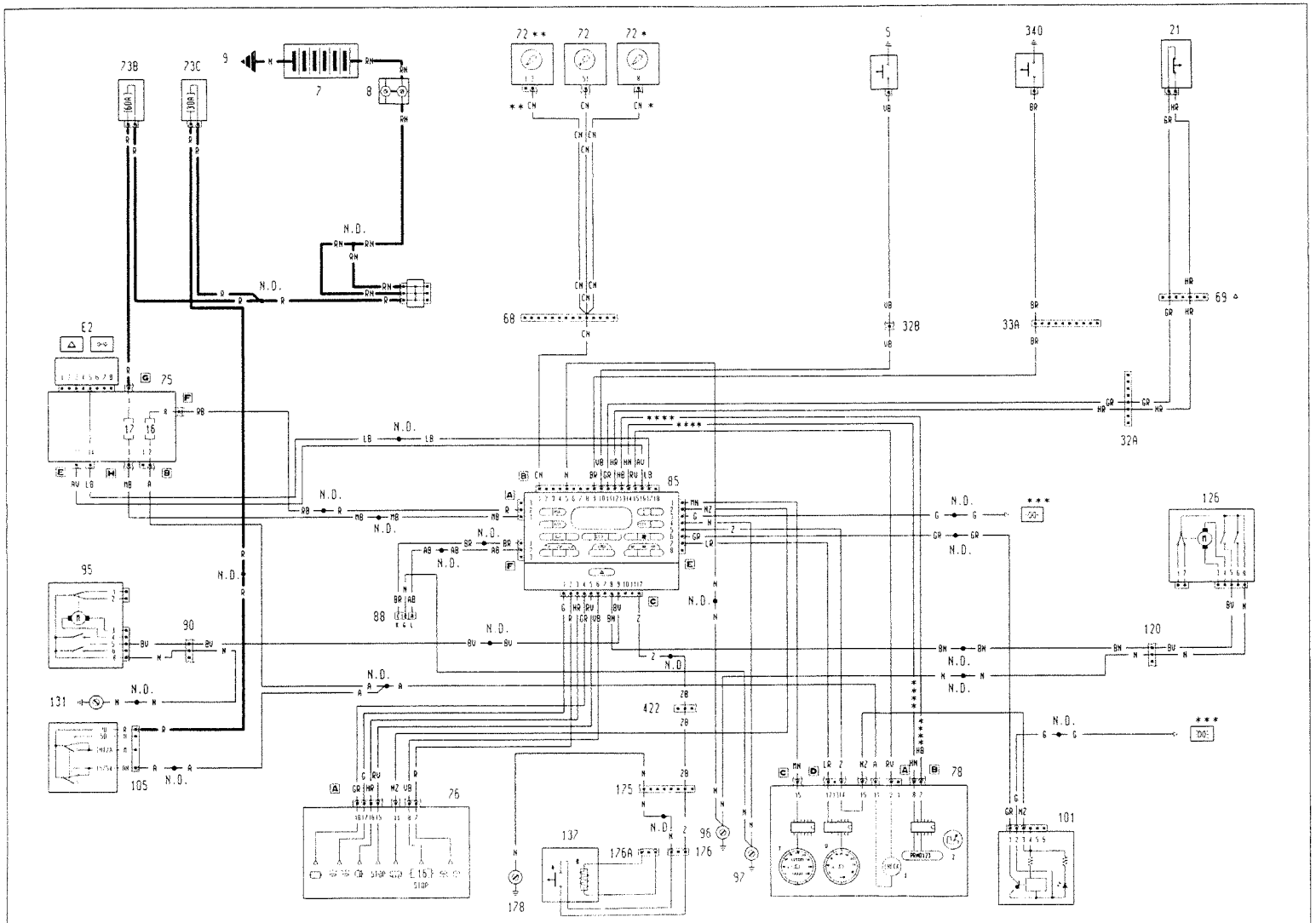

* Variant connections for the 2959 V6 24v version
** Variant connections for the 1995 16v Turbo version
*** See ideogram lights wiring diagram
**** Variant connections for the version with automatic transmission
▲ Non existent for the 1995 16v Turbo - 1998 20v Turbo -2959 V6 24v versions

P3U631Z01

3U2371

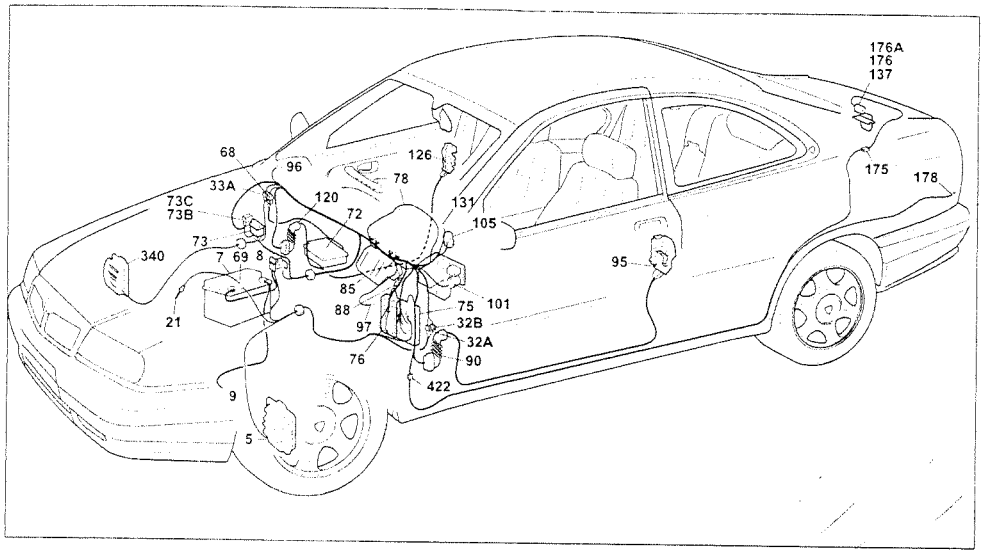

P3U239I01

Petrol versions
Complete Infocenter

Components key

5 Left front brake pad wear sensor
7 Battery
8 Main connector block
9 Earth on bodyshell
21 Minimum engine oil level sensor
32A Connection between dashboard and left engine compartment cables
32B Connection between dashboard and left engine compartment cables
33A Connection between dashboard and right engine compartment cables
68 Connection between dashboard and electronic injection cables
69 Engine services cable connection
72 Fuel injection control unit
73 Secondary connector block
73B 60A protective fuse for I.G.E. control unit / junction unit
73C 30A fuse protecting ignition switch/anti-theft device
75 Junction unit (dashboard)
E2 Intermitt. device for direction ind. / haz. w/lights
76 I.G.E. control unit
78 Instrument panel
I Check summary warning light
U Electronic rev counter
Y Electronic tachometer
Z Electronic automatic transmission gear selection display
85 Infocenter control unit
88 Diagnostic socket
90 Connection between dashboard and left front door cables
95 Left front central locking geared motor and signalling left front door open and anti-theft device on
96 Earth on carrier
97 Earth on floor
101 Light dimmer
105 Ignition switch
120 Connection between dashboard and right front door cables
126 Right front central locking geared motor and signalling right front door open and anti-theft device on
131 Earth on steering column support
137 Tailgate lock assembly
A Switch for luggage compartment courtesy light and engaging anti-theft device
175 Connection between left longitudinal and tailgate cables
176 Tailgate cables connection
178 Left rear earth
340 Right front brake pad wear sensor
422 Connection between dashboard and left longitudinal cables

N.D. Ultrasound welding taped in cable loom

32A Connection between dashboard and left engine compartment cables

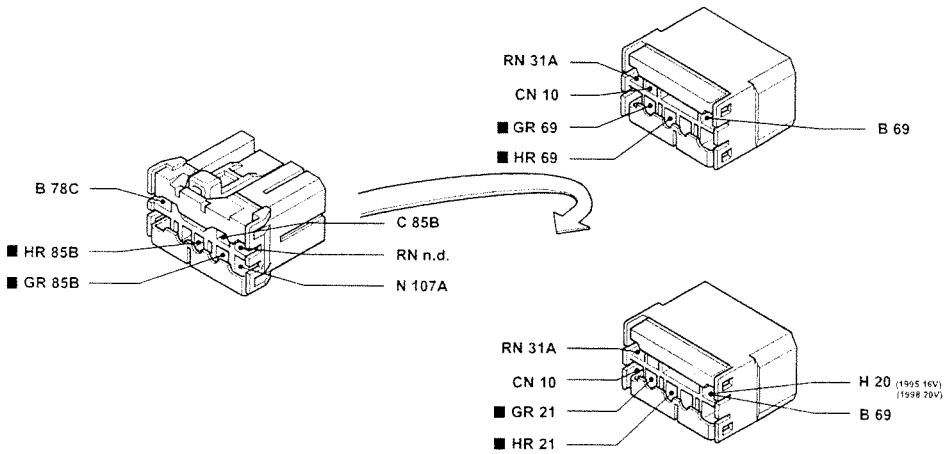

32B Connection between dashboard and left engine compartment cables

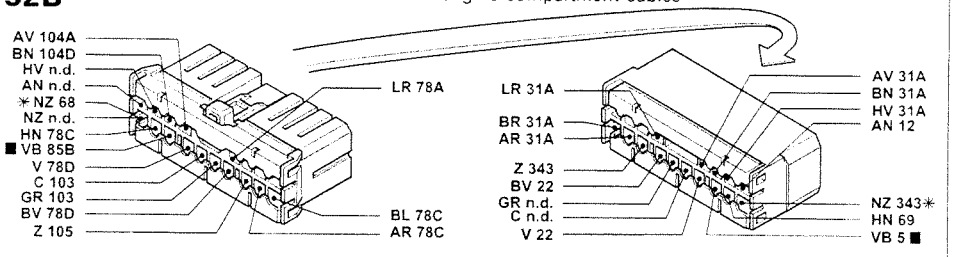

* Variant connection for 1998/2446/2959 versions with automatic transmission

33A Connection between dashboard and right engine compartment cables

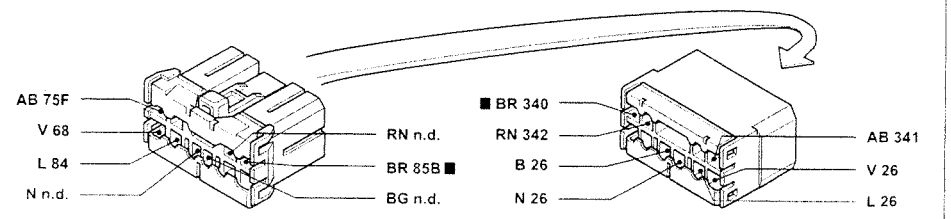

■ The cables in the wiring diagram are marked

P3U240I01

Complete I.G.E. control unit connections - (See key at end of wiring diagrams)

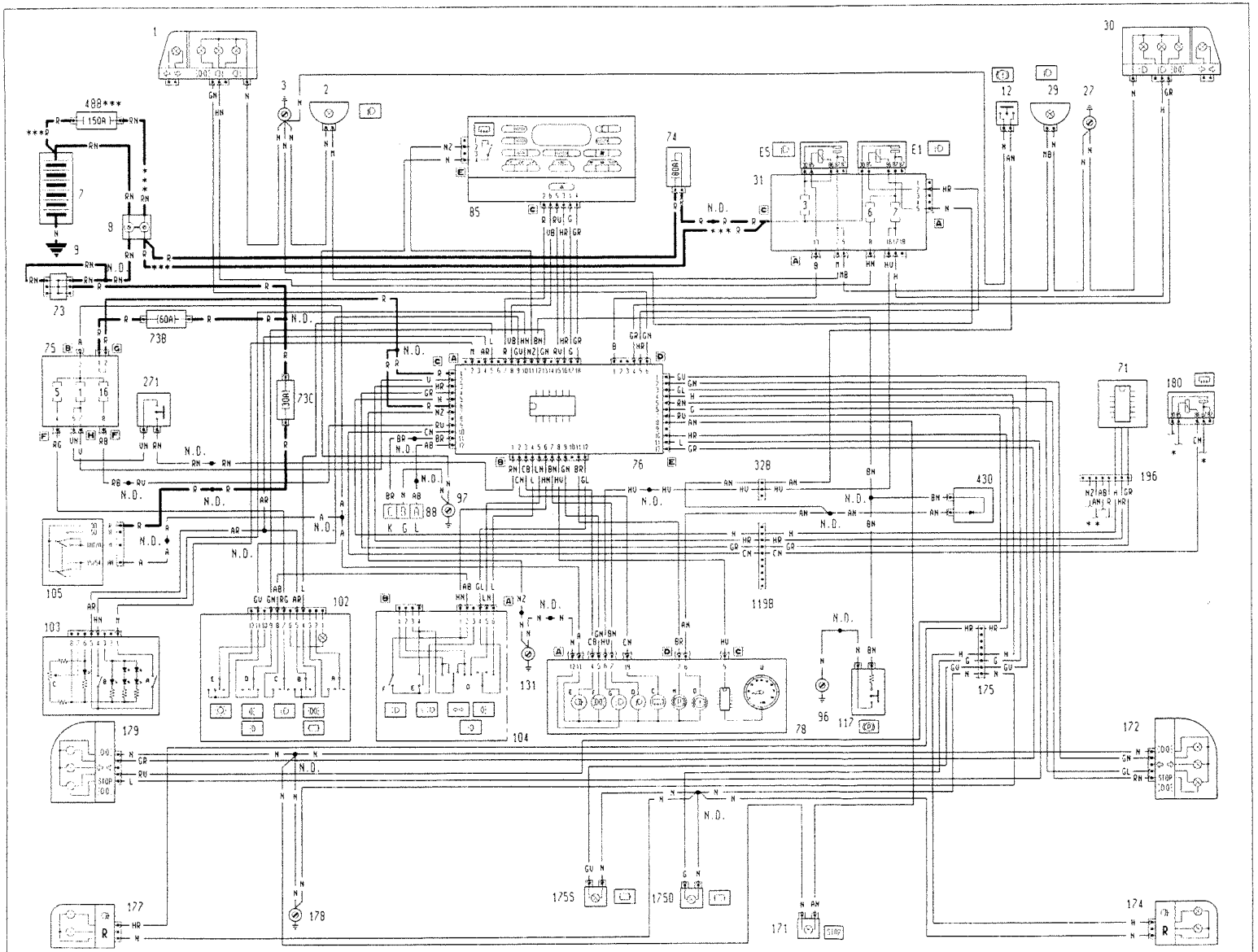

* See heated rear windscreen diagram
** See tow hook wiring diagram
*** Variant connection for the 2387 JTD version

PJU641Z01

3U2411

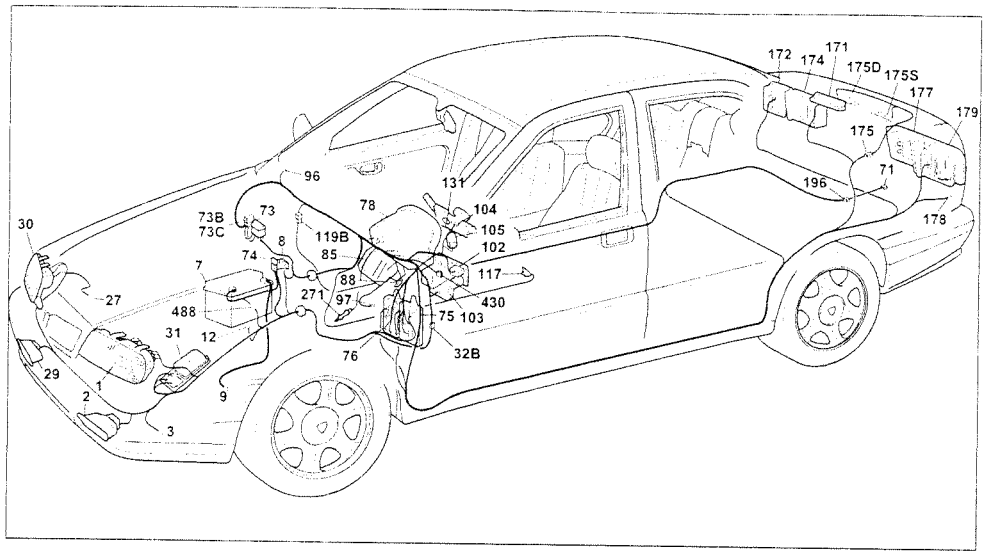

P3U243I01

Complete I.G.E. control unit connections

Components key

1 Left front light cluster
2 Left fog lamp
3 Left front earth
7 Battery
8 Main connector block
9 Earth on bodyshell
12 Insufficient brake fluid level sensor
27 Right front earth
29 Right fog lamp
30 Right front light cluster
31 Peripheral control unit (engine compartment)
E1 Dipped headlamps relay feed
E5 Fog lights relay
32B Connection between dash & left engine compartment cables
71 Tow hook preparation control unit
73 Secondary connector block
73A 80A fuse protecting rear services
73B 60A protective fuse for I.G.E. control unit / junction unit
73C 30A fuse protecting ignition switch/alarm device
74 80A fuse protecting peripheral control unit (engine compartment)
75 Junction unit (dashboard)
76 I.G.E. control unit
78 Instrument panel
C Heated rear windscreen warning light
D Fog lights warning light
E Rear fog lamps warning light
F Side lights warning light
N Handbrake warning light / I.G.E. control unit
O Insufficient brake fluid level warning light
U Electronic rev counter
85 Infocenter control unit
88 Diagnostic socket
96 Earth on carrier
97 Earth on floor
100 Connection between dashboard and left longitudinal cables
102 Exterior lights control unit
103 Switch control unit
104 Steering column switch unit
105 Ignition switch
117 Switch signalling handbrake applied
119B Connection between dashboard and right longitudinal cables
131 Earth on steering column support
165 Heated rear windscreen
165A Earth for heated rear windscreen
166 Amplifier for aerial in rearscreen
171 Additional brake lights warning light
172 Right rear light cluster on fixed section
173 Right rear earth
174 Right rear light cluster on moveable section
175 Connection between left longitudinal and tailgate cables
175S Left no. plate light
175D Right no. plate light
177 Left rear light cluster on moveable section
178 Left rear earth
179 Left rear light cluster on fixed section
180 Heated rear windscreen relay feed
181 Connection between left longitudinal and right longitudinal cables

189 30A fuse protecting heated rear windscreen
196 Preparation for trailer
271 Brake lights switch
430 Handbrake applied / insufficient brake fluid level connecting diode
488 150A maxi fuse

N.D. Ultrasound welding taped in cable loom

32B Connection between dashboard and left engine compartment cables

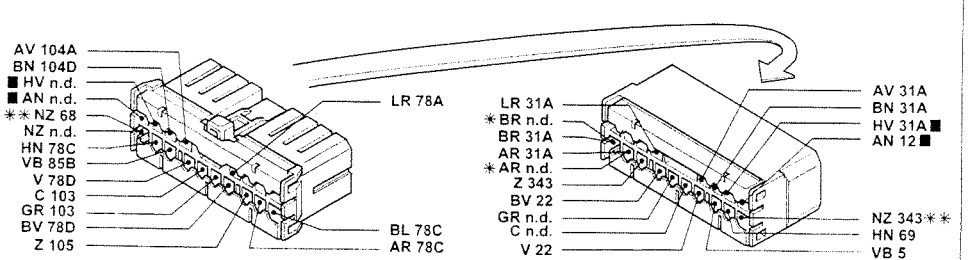

✱ Variant connection for Turbo Diesel versions
✱✱ Variant connection for 1998/2446/2959 versions with automatic transmission

119B Connection between dashboard and right longitudinal cables

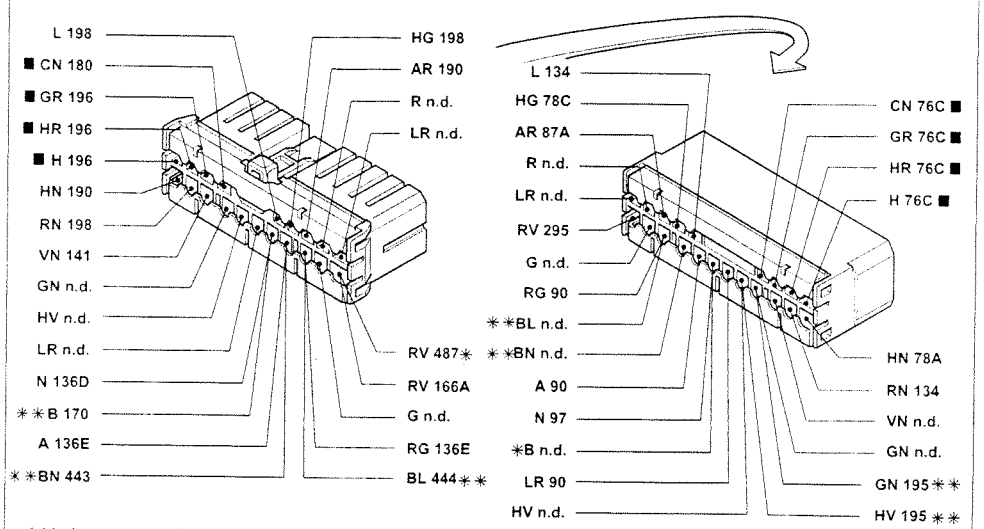

✱ Variant connection for Station Wagon versions
✱✱ Variant connection for COUPE' versions

175 Connection between left longitudinal and tailgate cables

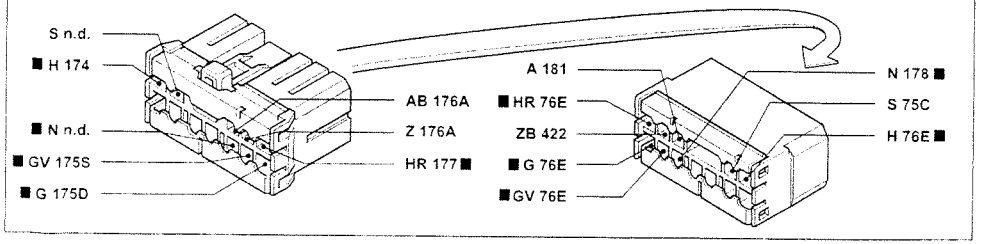

P3U244I01

■ The cables in the wiring diagram are marked

Controlled damping suspension (S.C.S.) - (See key at end of wiring diagrams)

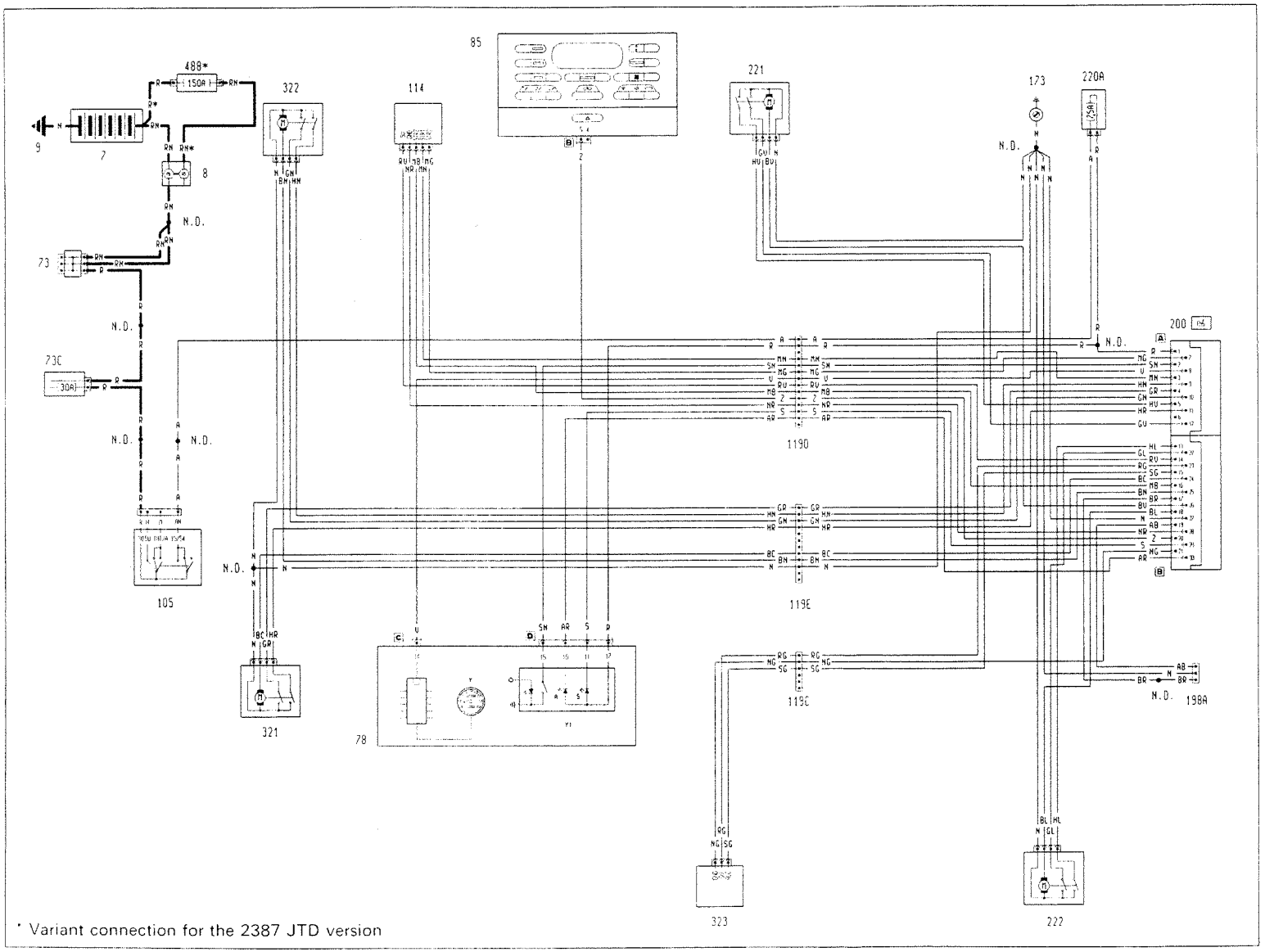

P.3U651Z01

3U245I

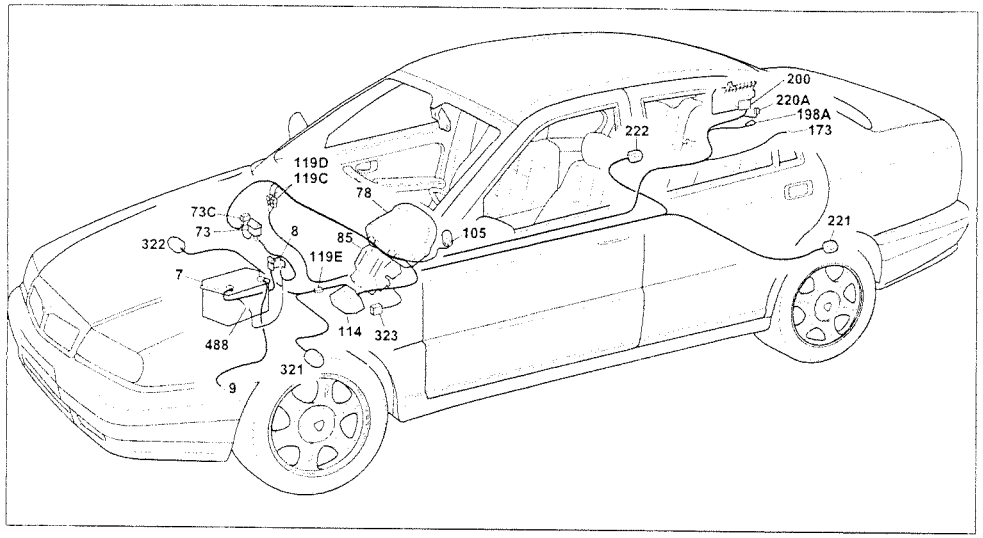

P3U247I01

Controlled damping suspension (S.C.S.)

Components key

7 Battery
8 Main connector block
9 Earth on bodyshell
73 Secondary connector block
73C 30A fuse protecting ignition switch/anti-theft device
75 Junction unit (dashboard)
78 Instrument panel
Y Electronic tachometer
Y1 S.C.S. switch unit
85 Inforenter control unit
105 Ignition switch
114 Sensor on steering
119C Connection between dashboard and right longitudinal cables
119D Connection between dashboard and right front door cables
119E Connection between right longitudinal and right engine compartment cables
173 Right rear earth
198A Diagnostic socket
200 Controlled damping suspension electronic control unit (S.C.S)
220A 7.5A fuse protecting S.C.S. system
221 Motor for left rear controlled damping suspension
222 Motor for right rear controlled damping suspension
321 Motor for left front controlled damping suspension
322 Motor for right front controlled damping suspension
323 Accelerometer for controlled damping suspension
488 150A maxi fuse

N.D. Ultrasound welding taped in cable loom

78D Fog lights warning light

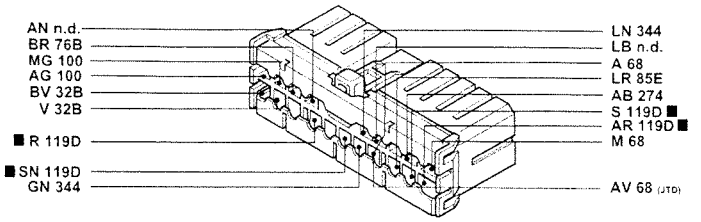

119C Connection between dashboard and right longitudinal cables

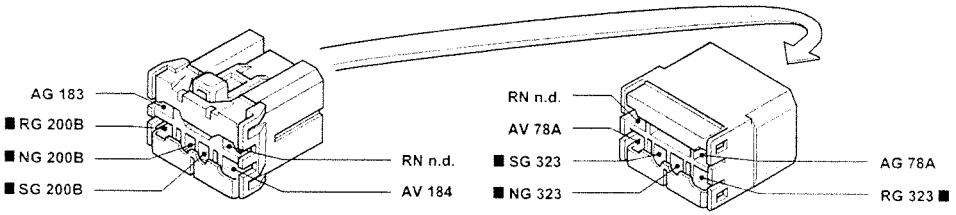

119D Connection between dashboard and right longitudinal cables

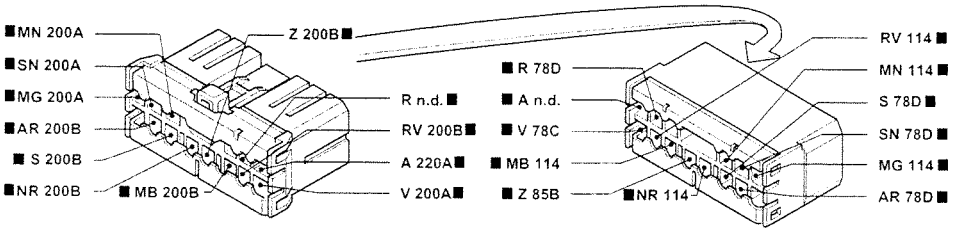

119E Connection between dashboard and right longitudinal cables

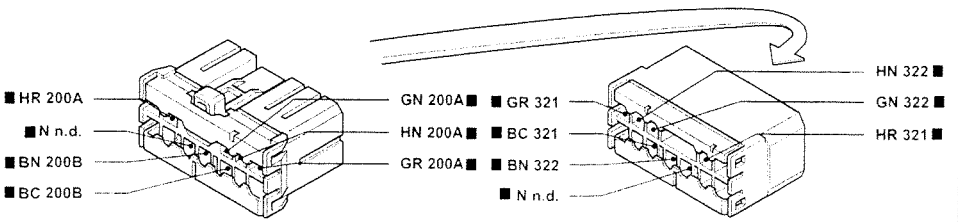

P3U248I01

■ The cables in the wiring diagram are marked

Petrol versions
Instrument panel connections - (See key at end of wiring diagrams)

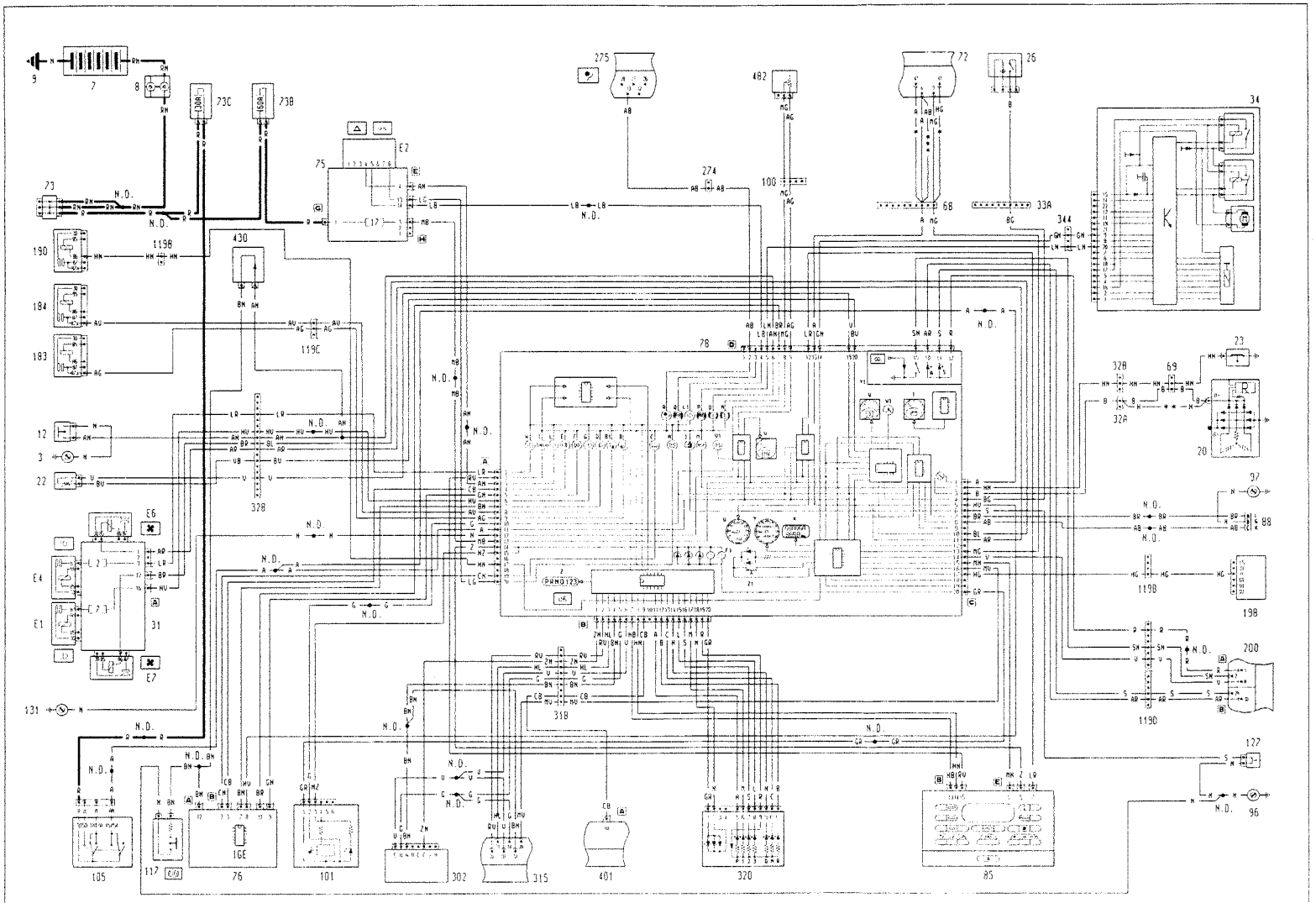

* Variant connections for the 2959 V6 24v version
** Variant connections for the 1995 16v Turbo - 1998 20v Turbo versions
*** Variant connection for the 1998 20v Turbo Version

P3U66IZ01

3U2491

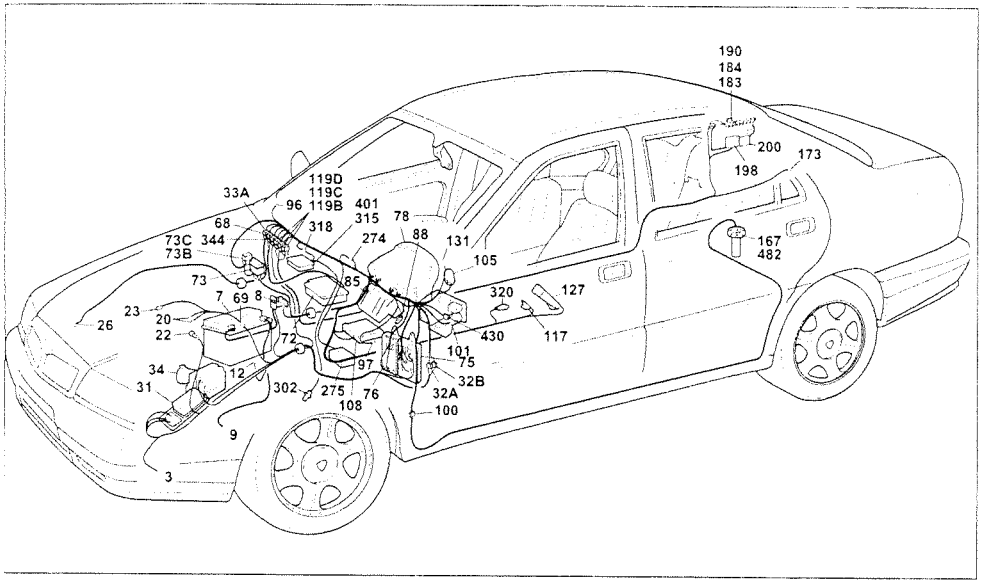

P3U251I01

Petrol versions
Instrument panel connections

Components key

3 Left front earth
7 Battery
8 Main connector block
9 Earth on bodyshell
12 Insufficient brake fluid level sensor
20 Alternator
22 Engine coolant temperature sender unit
23 Sensor signalling minimum engine oil pressure
26 Three stage pressure switch
31 Peripheral control unit (engine compartment)
E1 Dipped headlamps relay feed
E4 Main beam headlamps relay feed
E6 Engine cooling fan high speed relay feed
E7 Engine cooling fan low speed relay feed
32A Connection between dash. & left engine compartment cables
32B Connection between dash. & left engine compartment cables
33A Connection between dash. & right engine compartment cables
34 Anti-lock brakes electro-hydraulic control unit (A.B.S.)
68 Connection between dashboard and electronic injection cables
69 Connection for services cable in engine
72 Fuel injection control unit
73 Secondary connector block
73B 60A protective fuse for I.G.E. control unit / junction unit
73C 30A fuse protecting ignition switch/anti-theft device
75 Junction unit (dashboard)
E2 Intermittent device for direction indicators / hazard warning lights
76 I.G.E. control unit
78 Instrument panel
85 Infocenter control unit
88 Diagnostic socket
96 Earth on carrier
97 Earth on floor
100 Connection between dashboard and left longitudinal cables
101 Light dimmer
105 Ignition switch
108 LANCIA-CODE control unit
117 Switch signalling handbrake applied
119B Connection between dashboard and right longitudinal cables
119C Connection between dashboard and right longitudinal cables
119D Connection between dashboard and right front door cables
127 Switch signalling seat belts not fastened
131 Earth on steering column support
167 Fuel level gauge
183 Relay for driver's seat heater pad
184 Relay for passenger seat heater pad
190 Locking / unlocking luggage compartment tailgate relay feed
198 Servotronic device electronic control unit
200 Controlled damping suspension electronic control unit (S.C.S)
274 Connection between dashboard and AIR-BAG cables
275 AIR-BAG control unit
302 Switch control unit
315 Electronic automatic transmission gear selector control unit (ZF)
318 Connection between electronic automatic transmission and dashboard cables
320 Trim on electronic automatic transmission gear selector lever
344 Connection between dashboard and anti lock brakes cables (A.B.S.)
401 Electronic automatic transmission gear selector control unit (AISIN)
430 Handbrake applied/insufficient brake fluid level connector diode
482 Electric fuel pump / fuel gauge

N.D. Ultrasound welding taped in cable loom

119B Connection between dashboard and right longitudinal cables

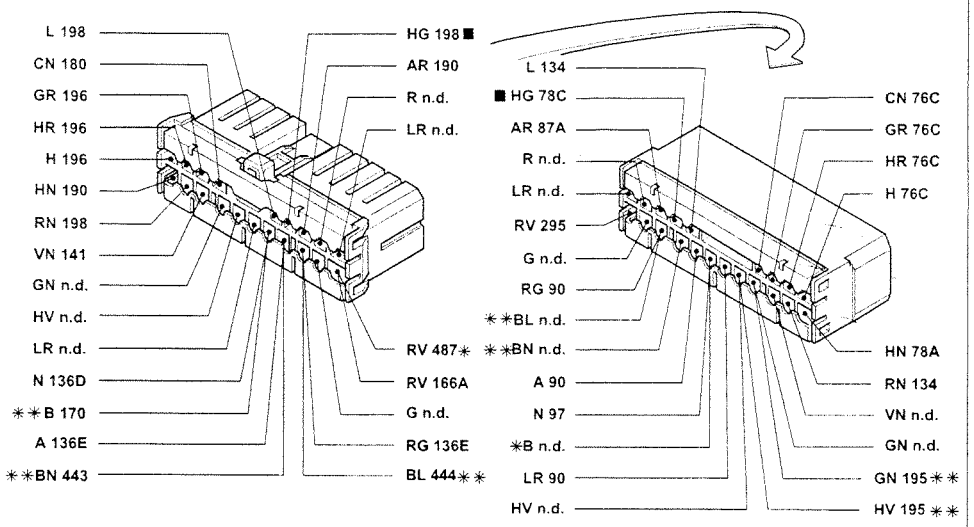

* Variant connection for Station Wagon versions

** Variant connection for COUPE' versions

119C Connection between dashboard and right longitudinal cables

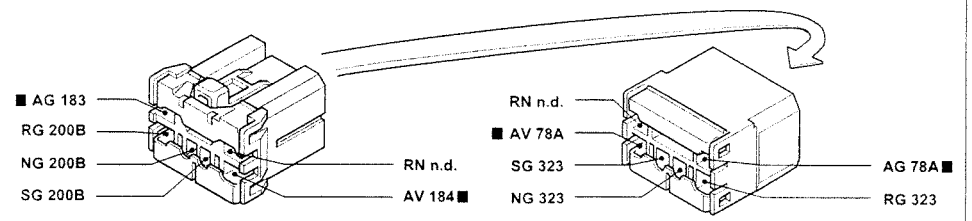

119D Connection between dashboard and right longitudinal cables

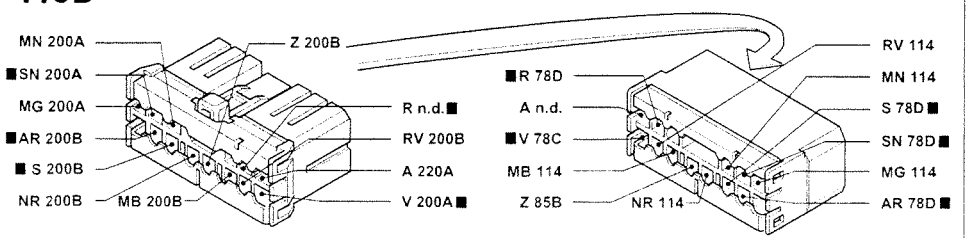

P3U252I01

■ The cables in the wiring diagram are marked

Diesel versions
Instrument panel connections - (See key at end of wiring diagrams)

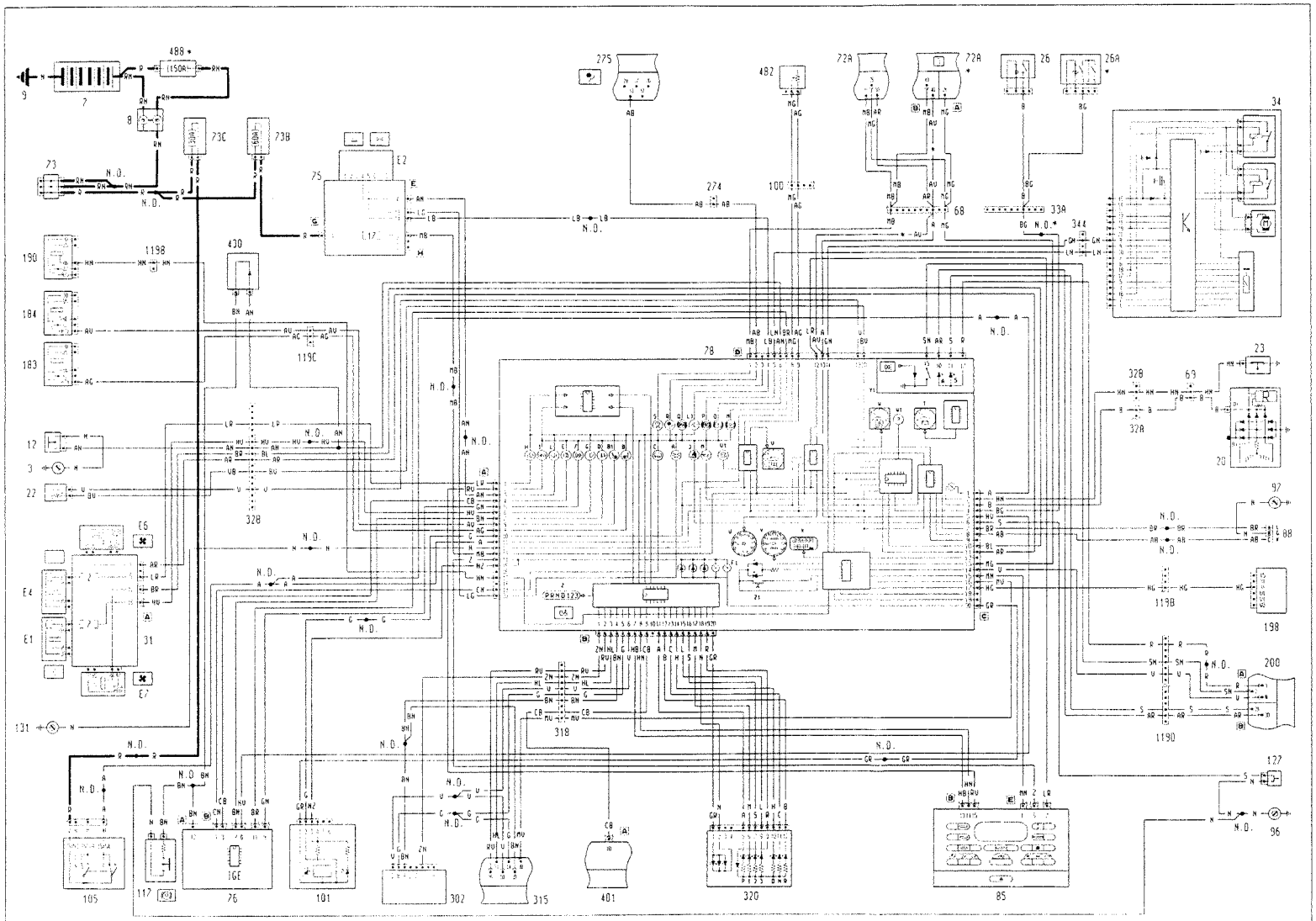

* Variant connection for the 2387 JTD version

P3U67IZ01

3U253I

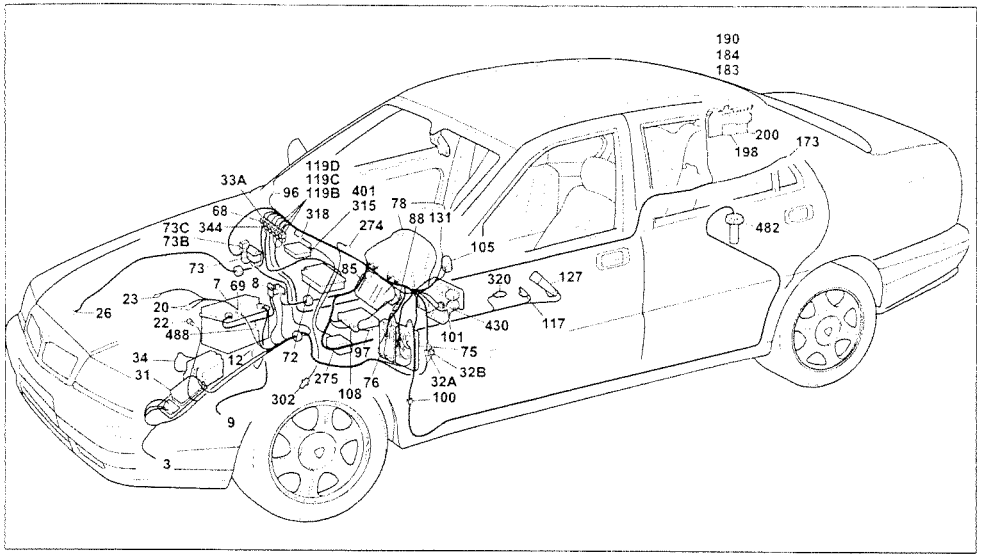

P3U255I01

Diesel versions
Instrument panel connections

Components key

3 Left front earth
7 Battery
8 Main connector block
9 Earth on bodyshell
12 Insufficient brake fluid level sensor
20 Alternator
22 Engine coolant temperature sender unit
23 Sensor signalling minimum engine oil pressure
26 Three stage pressure switch
26A Four stage pressure switch
31 Peripheral control unit (engine compartment)
E1 Dipped headlamps relay feed
E4 Main beam headlamps relay feed
E6 Engine cooling fan high speed relay feed
E7 Engine cooling fan low speed relay feed
32A Connection between dash. & left engine compartment cables
32B Connection between dash. & left engine compartment cables
33A Connection between dash. & right engine compartment cables
34 Anti-lock brakes electro-hydraulic control unit (A.B.S.)
68 Connection between dashboard and electronic injection cables
69 Connection for services cables in engine
72A Fuel pump electronic control unit
73 Secondary connector block
73B 60A protective fuse for I.G.E. control unit / junction unit
73C 30A fuse protecting ignition switch/anti-theft device
75 Junction unit (dashboard)
E2 Intermittent device for direction indicators / hazard warning lights
76 I.G.E. control unit
78 Instrument panel
85 Infocenter control unit
88 Diagnostic socket
96 Earth on carrier
97 Earth on floor
100 Connection between dashboard and left longitudinal cables
101 Light dimmer
105 Ignition switch
108 LANCIA-CODE control unit
117 Switch signalling handbrake applied
119C Connection between dashboard and right longitudinal cables
119D Connection between dashboard and right front door cables
127 Switch signalling seat belts not fastened
131 Earth on steering column support
183 Relay for driver's seat heater pad
184 Relay for passenger seat heater pad
198 Servotronic device electronic control unit
200 Controlled damping suspension electronic control unit (S.C.S.)
274 Connection between dashboard and AIR-BAG cables
275 AIR-BAG control unit
302 Switch control unit
315 Electronic automatic transmission gear selector control unit (ZF)
318 Connection between electronic automatic transmission and dashboard cables
320 Trim on electronic automatic transmission gear selector lever
344 Connection between dashboard and anti-lock brakes cables (A.B.S.)
401 Electronic automatic transmission gear selector control unit (AISIN)
430 Handbrake applied / insufficient brake fluid level connector diode
482 Electric fuel pump fuel gauge
488 150A maxi fuse
N.D. Ultrasound welding taped in cable loom

119B Connection between dashboard and right longitudinal cables

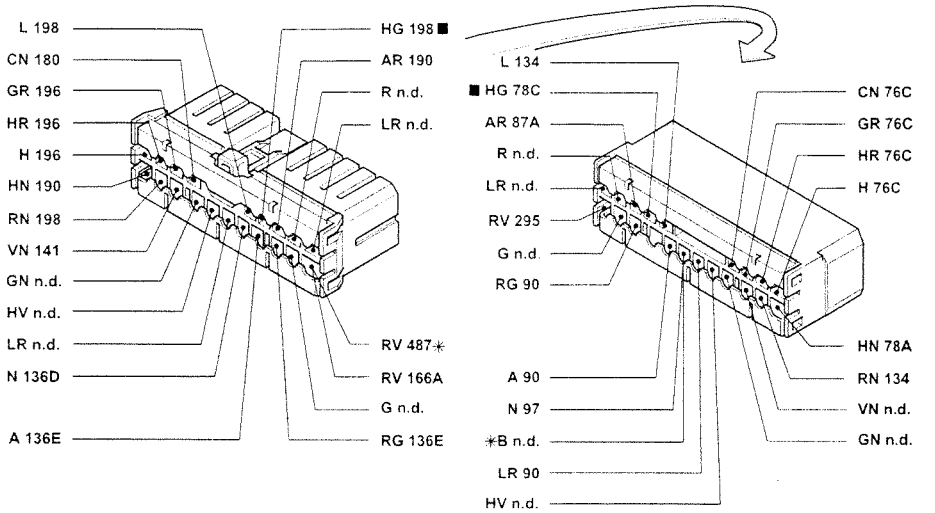

* Variant connection for Station Wagon versions

119C Connection between dashboard and right longitudinal cables

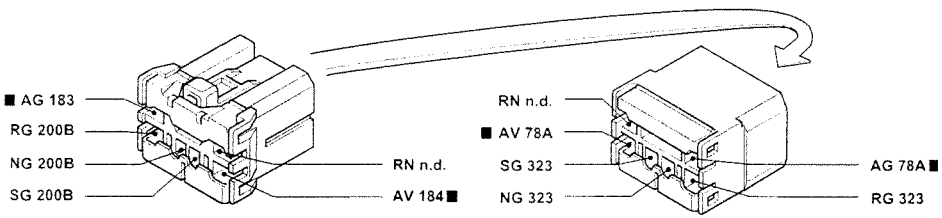

119D Connection between dashboard and right longitudinal cables

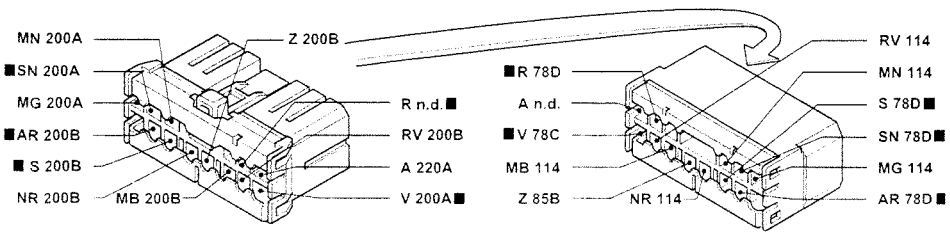

P3U256I01

■ The cables in the wiring diagram are marked

Junction unit (in dashboard) - (See key at end of wiring diagrams)

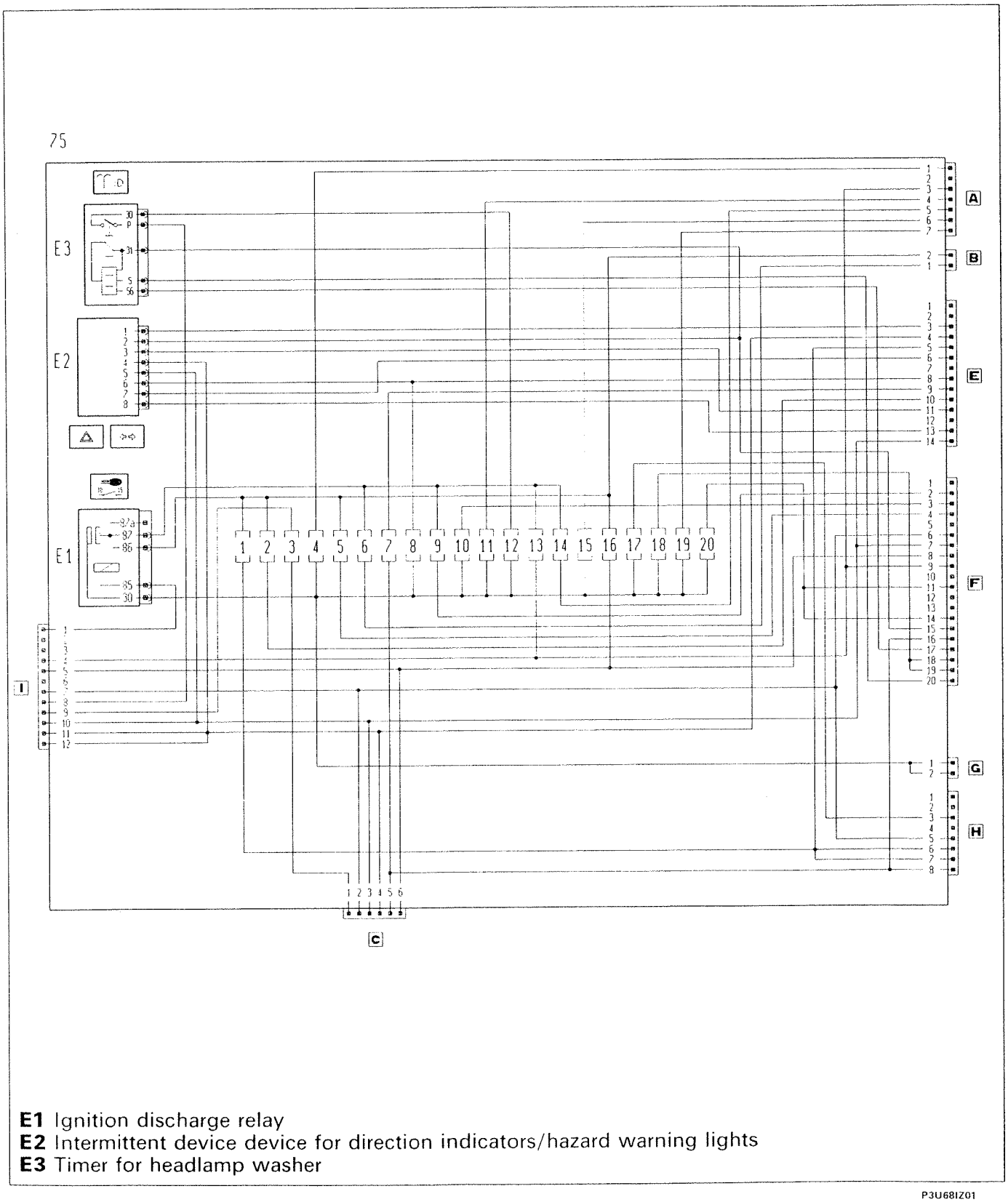

E1 Ignition discharge relay
E2 Intermittent device device for direction indicators/hazard warning lights
E3 Timer for headlamp washer

P3U68IZ01

3U257I

Copyright by Fiat Auto

Peripheral control unit (in engine compartment) - (See key at end of wiring diagrams)

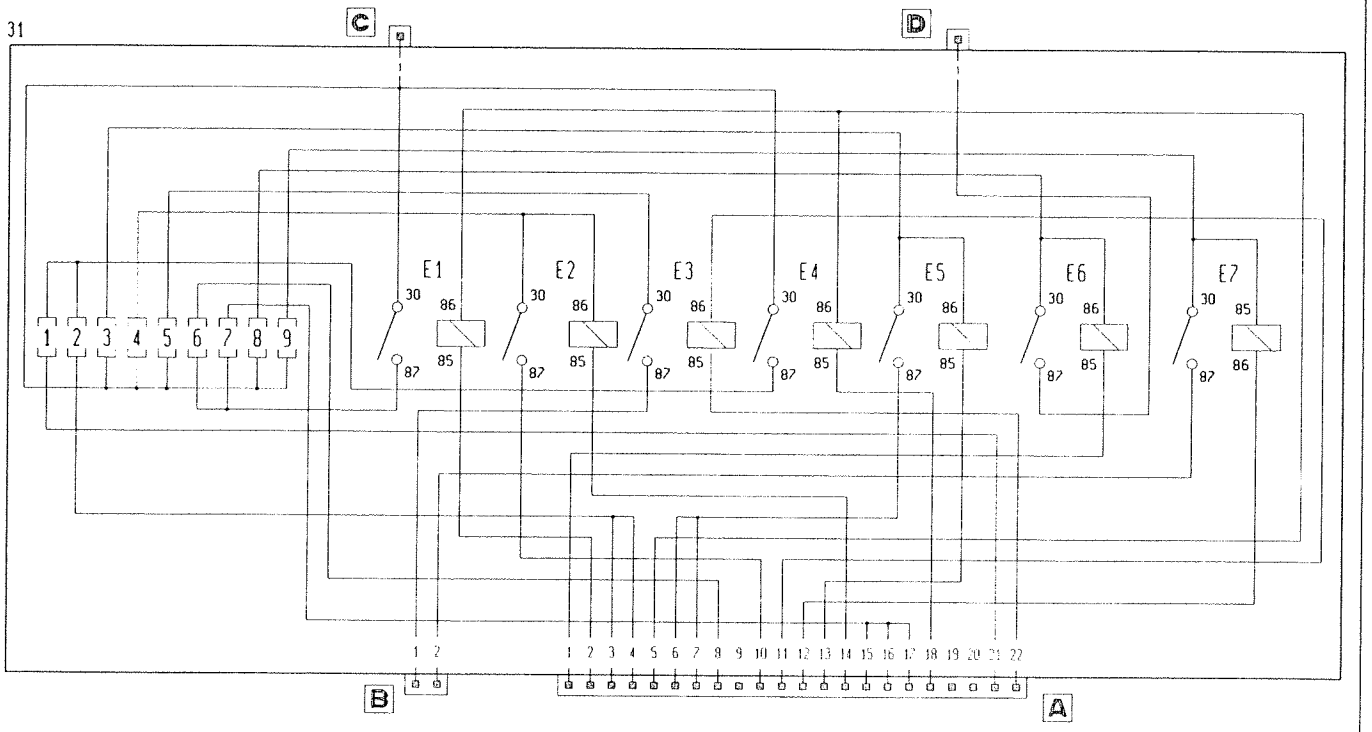

E1 Dipped headlamps relay feed
E2 Horn relay feed
E3 Compressor coupling relay feed
E4 Main beam headlamps relay feed
E5 Fog lights relay
E6 Engine cooling fan high speed relay feed
E7 Engine cooling fan low speed relay feed

3U2581

P3U69IZ01

Preparation for middle of the range radio - Preparation for radio phone - Preparation for radio navigation system - (See key at end of wiring diagrams)

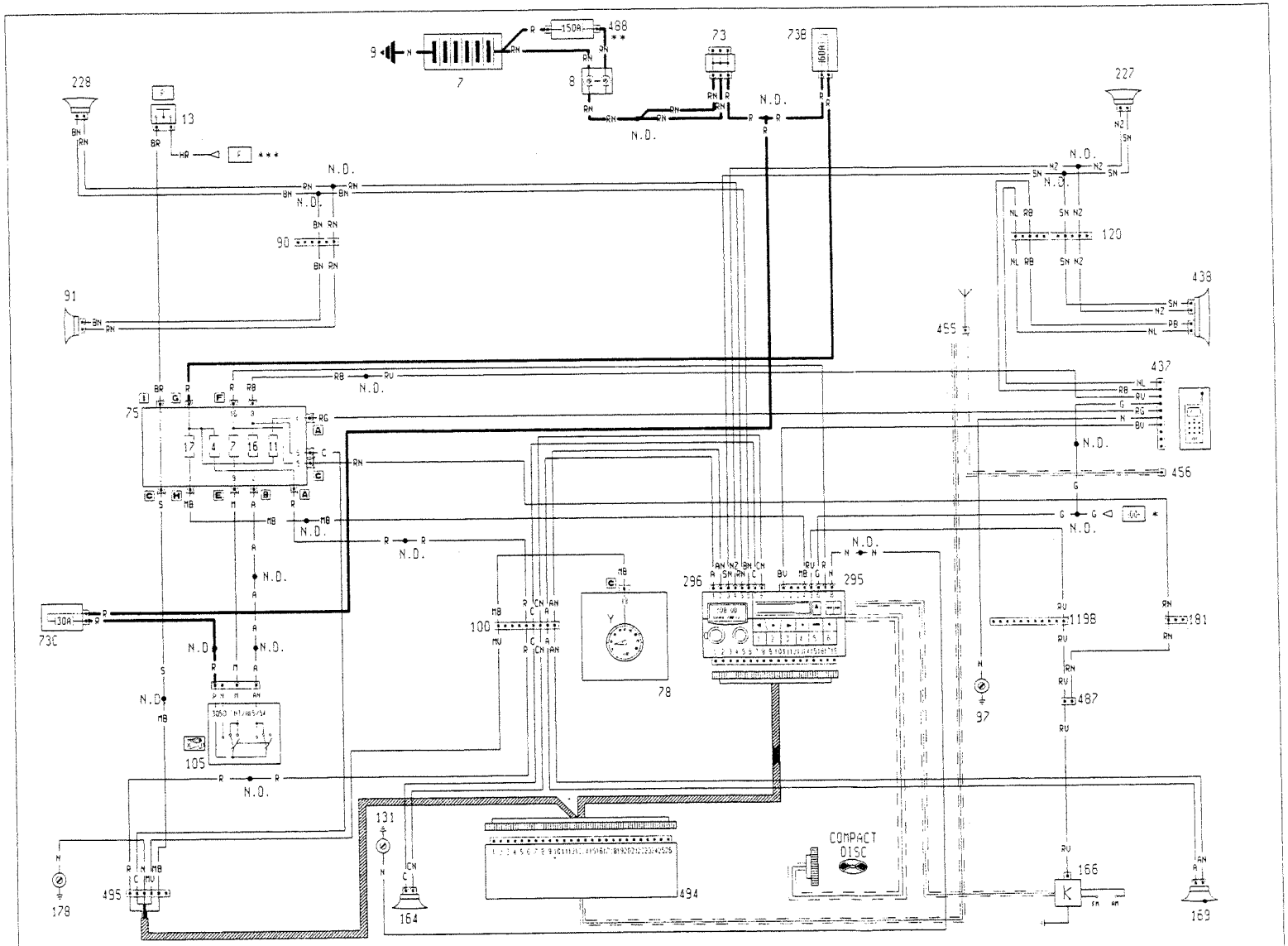

* See ideogram lights wiring diagram
** Variant connection for the 2387 JTD version
*** See reversing lights wiring diagram

P3U25810Z

3U909I

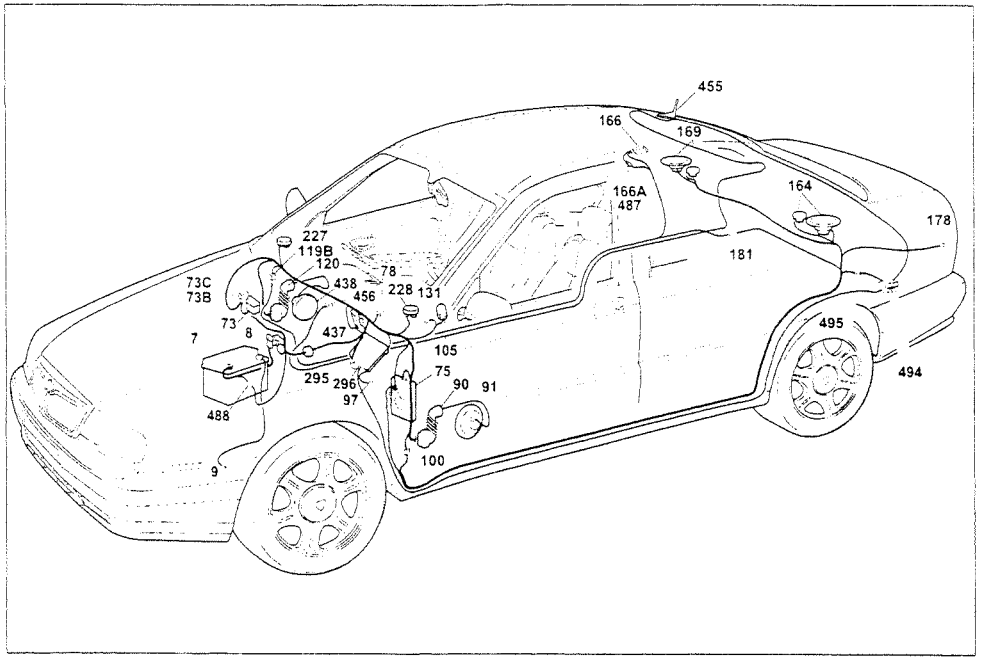

P3U258I04

Preparation for middle of the range radio - Preparation for radio phone - Preparation for radio navigation system

Components key

7 Battery
8 Main connector block
9 Earth on bodyshell
73 Secondary connector block
73B 60A protective fuse for I.G.E. control unit / junction unit
73C 30A fuse protecting ignition switch / anti-theft device
75 Junction unit (dashboard)
78 Instrument panel
Y Speedometer
90 Connection between dashboard and left front door cables
91 Speaker in left front door
97 Earth on floor
100 Connection between dashboard and left longitudinal cables
105 Ignition switch
119B Connection between dash. and right longitudinal cables
120 Connection between dashboard and right front door cables
131 Earth on steering column support
164 Left rear speaker
166 Amplifier for aerial in rearscreen
166A Rear cables connection in rearscreen
169 Right rear speaker
178 Left rear earth
181 Connection between left longitudinal and right longitudinal cables
227 Right front speaker
228 Left front speaker
295 Radio cables connection
296 Radio cables connection
437 Preparation for radio phone
438 Dual function speaker for radio and hands-free radio phone in right front door
455 Dual function aerial for radio phone & radio nav. system
456 Connection for radio phone aerial
487 Connection for radio aerial supply
488 150A maxi fuse protecting electrical equipment
494 Radio navigation system
495 Con. btwn left longitudinal/radio nav. system components

N.D. Ultrasound welding taped in cable loom

3U910I

120 Connection between dashboard and right front door cables

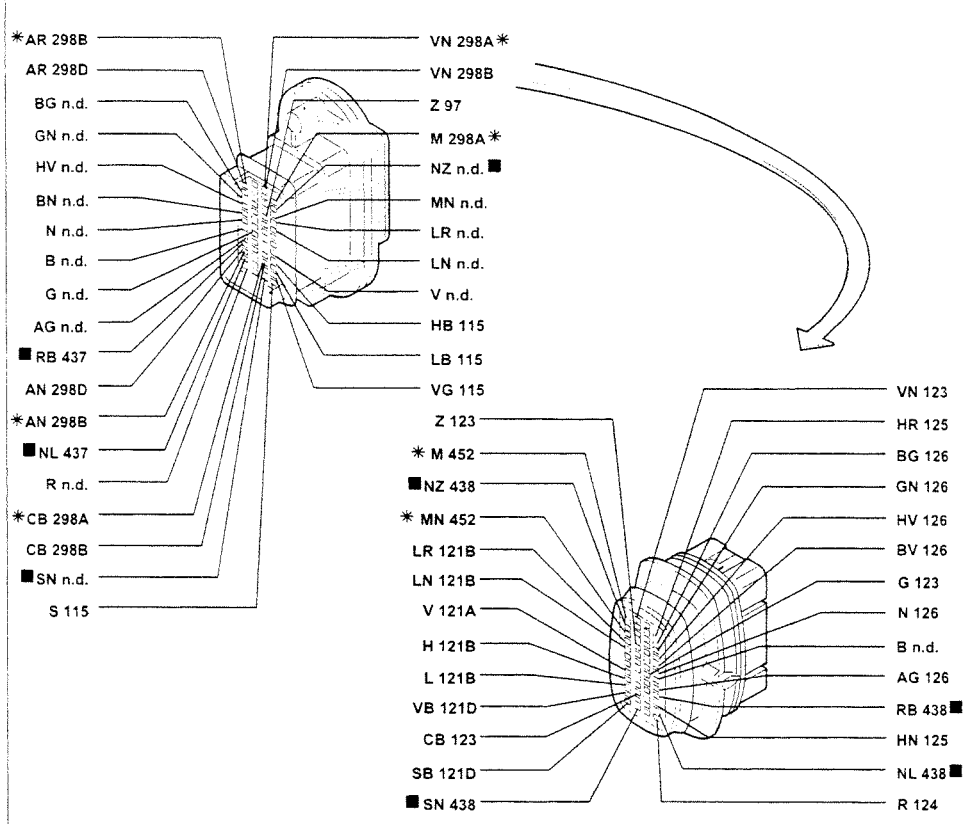

* Variant connection for COUPE' versions

181 Connection between left longitudinal and right longitudinal cables

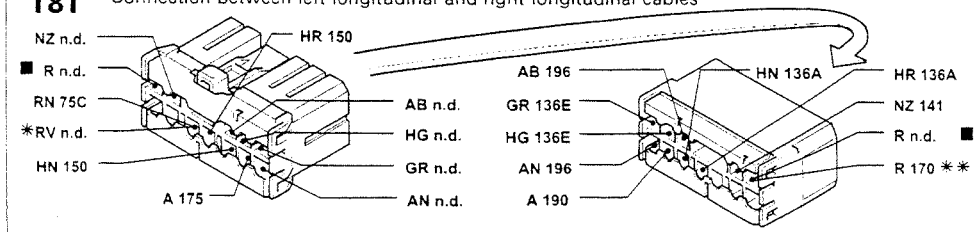

* Variant connection for versions with top of the range radio
** Variant connection for COUPE' versions

The cables in the wiring diagram are marked

P3U258I05

3U911I

Preparation for middle of the range radio - Preparation for radio phone - Preparation for radio navigation system - (See key at end of wiring diagrams)

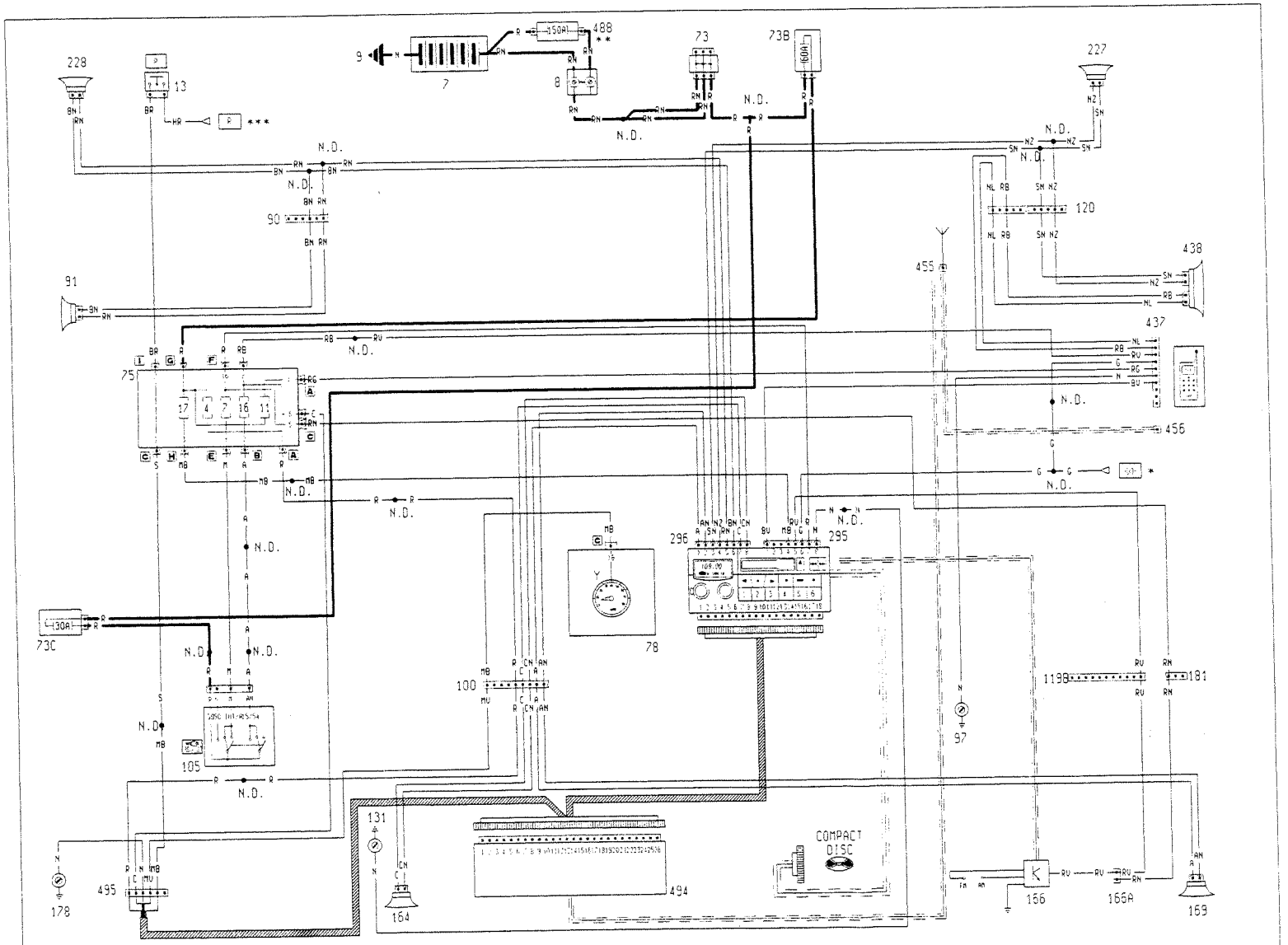

* See ideogram lights wiring diagram
** Variant connection for the 2387 JTD version
*** See reversing lights wiring diagram

P3U258106

3U9121

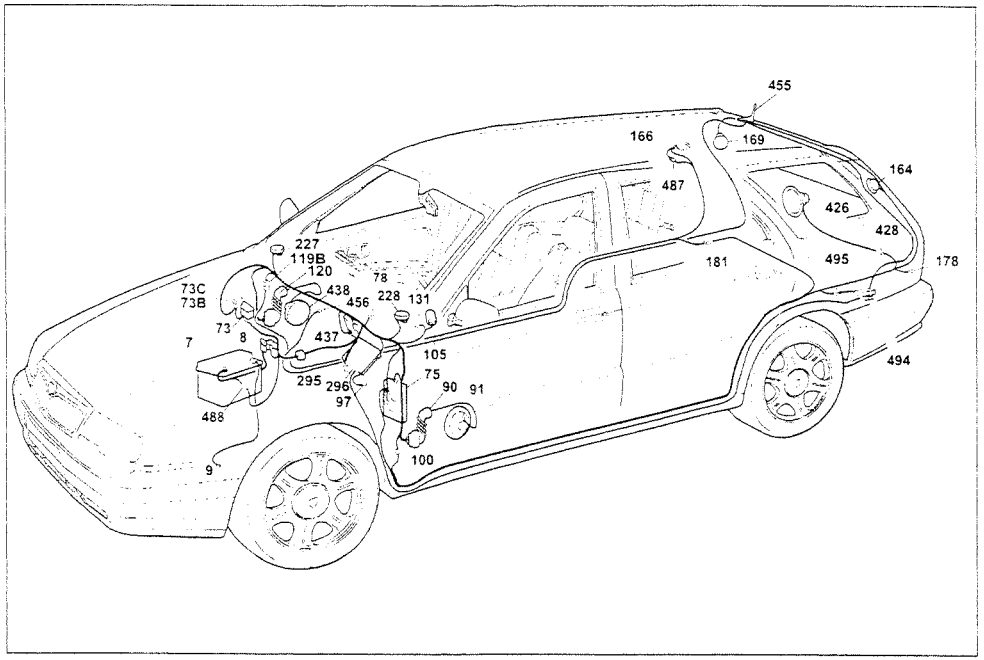

P3U258108

Preparation for middle of the range radio - Preparation for radio phone - Preparation for radio navigation system

Components key

7 Battery
8 Main connector block
9 Earth on bodyshell
73 Secondary connector block
73B 60A protective fuse for I.G.E. control unit / junction unit
73C 30A fuse protecting ignition switch / anti-theft device
75 Junction unit (dashboard)
78 Instrument panel
Y Speedometer
90 Connection between dashboard and left front door cables
91 Speaker in left front door
97 Earth on floor
100 Connection between dash. and left longitudinal cables
105 Ignition switch
119B Connection between dash. and right longitudinal cables
120 Connection between dash. and right front door cables
131 Earth on steering column support
164 Left rear speaker
166 Amplifier for aerial in rearscreen
169 Right rear speaker
178 Left rear earth
181 Connection between left longitudinal and right longitudinal cables
227 Right front speaker
228 Left front speaker
295 Radio cables connection
296 Radio cables connection
426 Speaker in tailgate (woofer)
428 Connection between left longitudinal / left tailgate cables for speaker
437 Preparation for radio phone
438 Dual function speaker for radio and hands-free radio phone in right front door
455 Dual function aerial for radio phone and radio nav. system
456 Connection for radio phone aerial
487 Connection for electrically operated aerial supply
488 150A maxi fuse protecting electrical equipment
494 Radio navigation system
495 Con. between left longitudinal/radio nav. system cables

N.D. Ultrasound welding taped in cable loom

3U913I

100 Connection between dashboard and left longitudinal cables

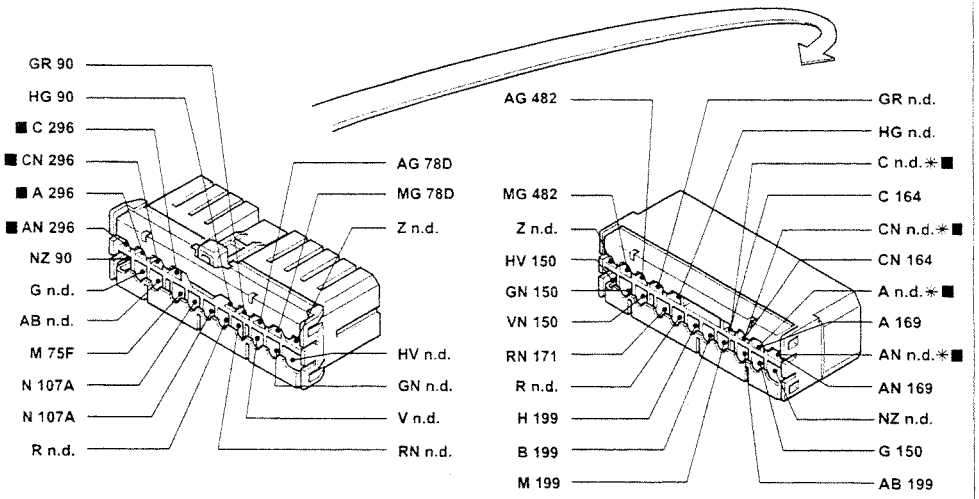

* Variant connection for Station Wagon versions

181 Connection between left longitudinal and right longitudinal cables

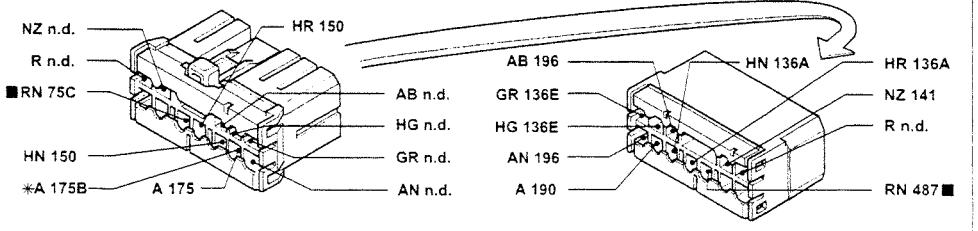

* Variant connection for Station Wagon versions

428 Connection between longitudinal/left tailgate cables for speaker

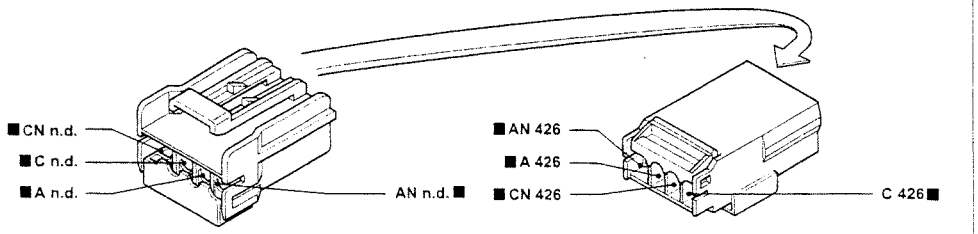

P3U032101

The cables in the wiring diagram are marked

3U914I

Preparation for top of the range radio - Preparation for radio phone - Preparation for radio navigation system - (See key at end of wiring diagrams)

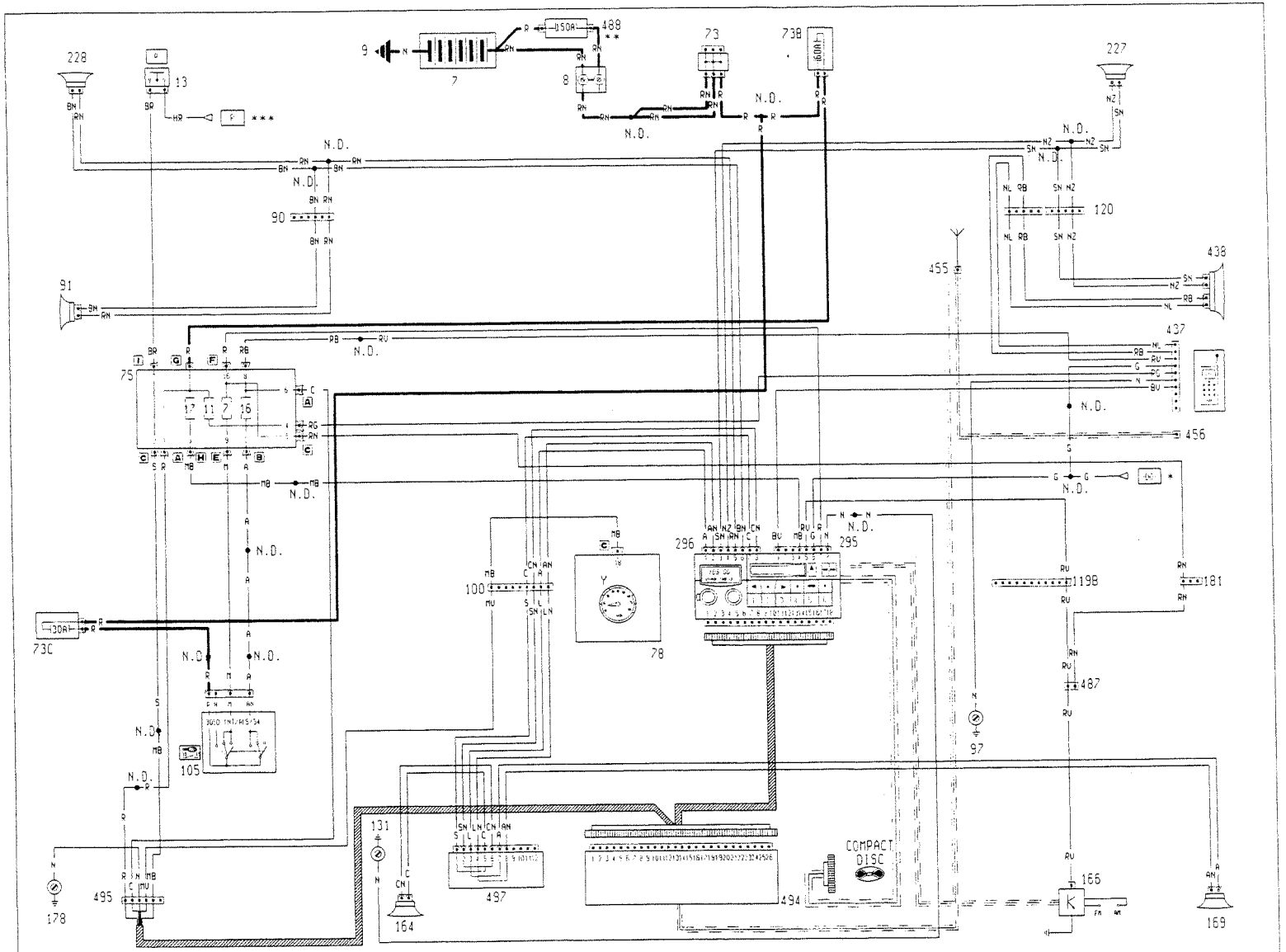

* See ideogram lights wiring diagram
** Variant connection for the 2387 JTD version
*** See reversing lights wiring diagram

P3U25811O

3U915I

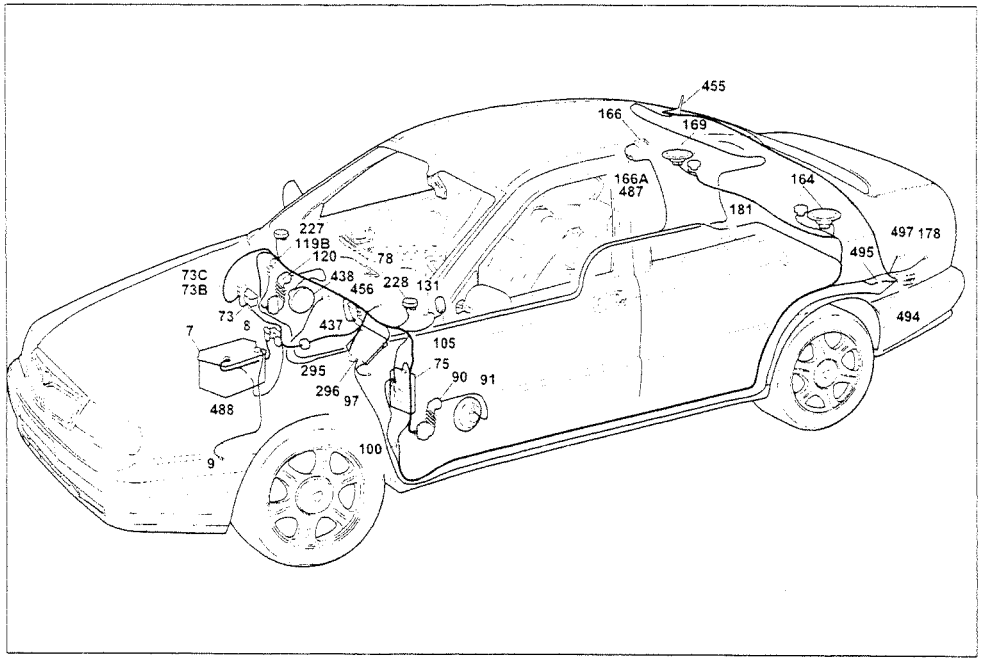

Preparation for top of the range radio - Preparation for radio phone - Preparation for radio navigation system P3U258I12

Components key

7 Battery
8 Main connector block
9 Earth on bodyshell
73 Secondary connector block
73B 60A protective fuse for I.G.E. control unit / junction unit
73C 30A fuse protecting ignition switch / anti-theft device
75 Junction unit (dashboard)
78 Instrument panel
Y Speedometer
90 Connection between dashboard and left front door cables
91 Speaker in left front door
97 Earth on floor
100 Connection between dash. and left longitudinal cables
105 Ignition switch
119B Connection between dash. and right longitudinal cables
120 Connection between dash. and right front door cables
131 Earth on steering column support
151 Amplifier for radio
164 Left rear speaker
166 Amplifier for aerial in rearscreen
166A Rear cables connection in rearscreen
169 Right rear speaker
178 Left rear earth
181 Connection between left and right longitudinal cables
227 Right front speaker
228 Left front speaker
295 Radio cables connection
296 Radio cables connection
422 Connection between left longitudinal/dashboard cables
437 Preparation for radio phone
438 Dual function speaker for radio and hands-free radio phone in right front door
455 Dual function aerial for radio phone and radio nav. system
456 Connection for radio phone aerial
487 Connection for radio aerial supply
488 150A maxi fuse protecting electrical equipment
494 Radio navigation system
495 Connection between left longitudinal/radio nav. system cables

N.D. Ultrasound welding taped in cable loom

119B Connection between dashboard and right longitudinal cables

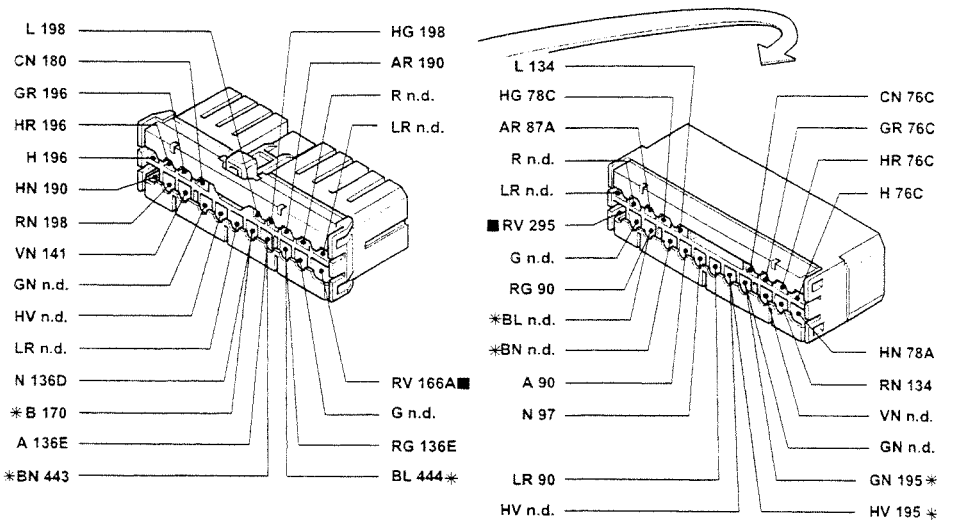

* Variant connection for COUPE' versions

166A Rear cables connection in rearscreen

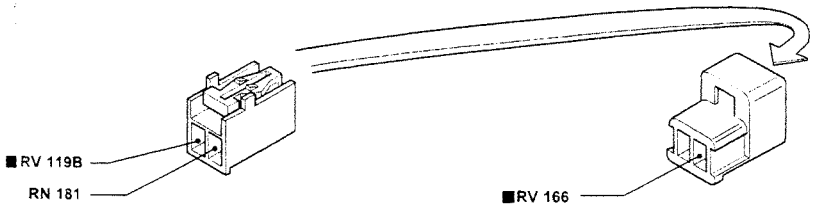

422 Connection between dashboard and left longitudinal cables (Only for COUPE' versions)

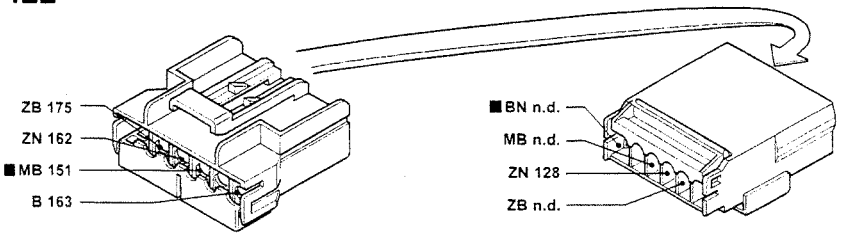

P3U036I01

The cables in the wiring diagram are marked

3U916I

Preparation for top of the range radio - Preparation for radio phone - Preparation for radio navigation system - (See key at end of wiring diagrams)

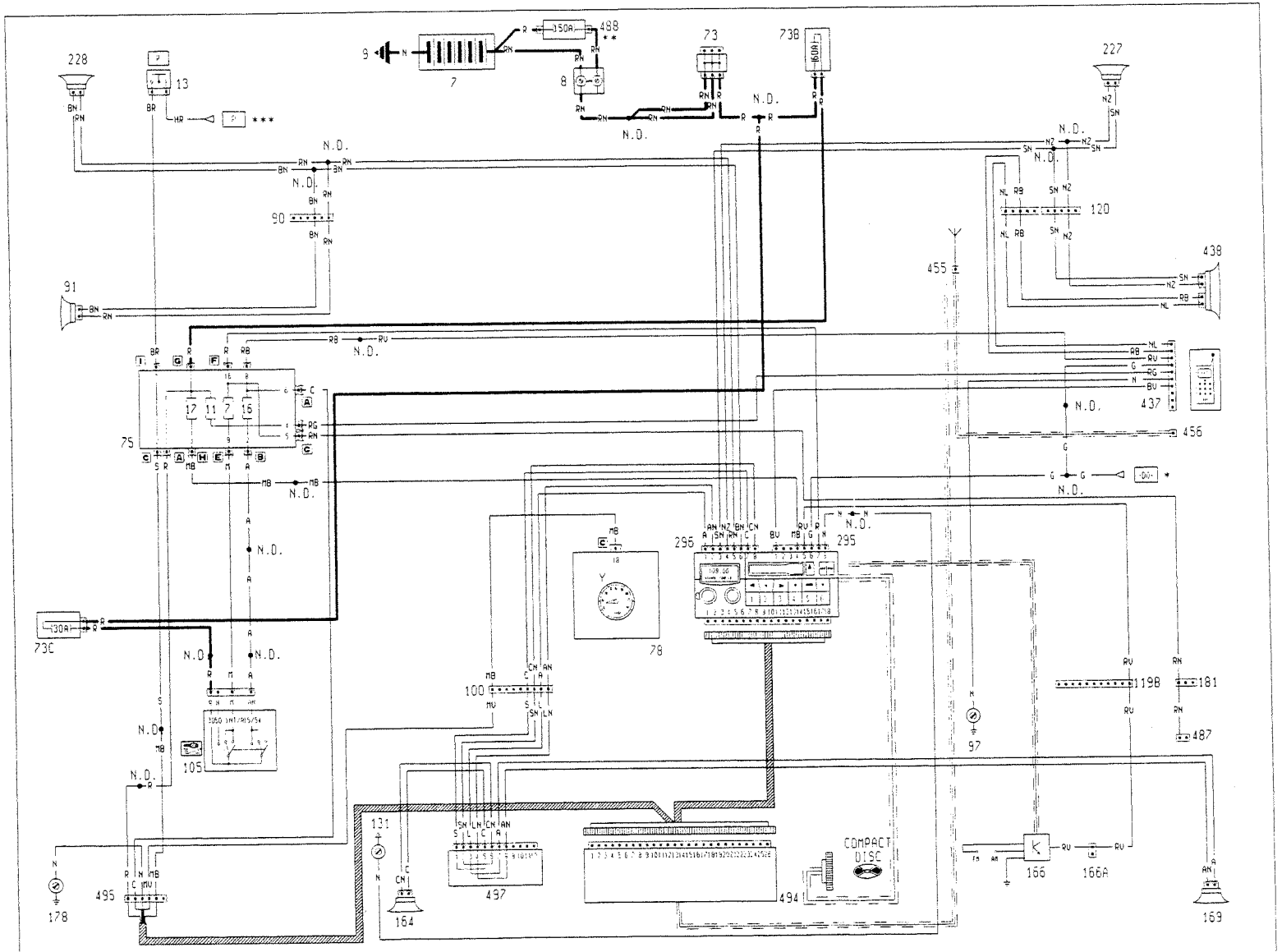

* See ideogram lights wiring diagram
** Variant connection for the 2387 JTD version
*** See reversing lights wiring diagram

3U918I

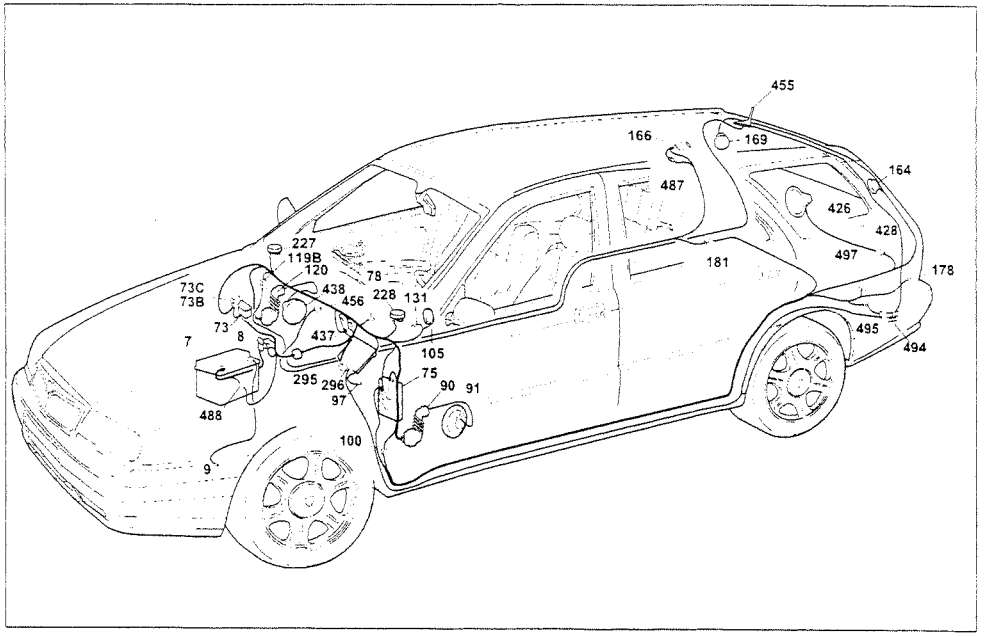

P3U258117

Preparation for top of the range radio - Preparation for radio phone - Preparation for radio navigation system

Components key

7 Battery
8 Main connector block
9 Earth on bodyshell
73 Secondary connector block
73B 60A protective fuse for I.G.E. control unit / junction unit
73C 30A fuse protecting ignition switch / anti-theft device
75 Junction unit (dashboard)
78 Instrument panel
Y Speedometer
90 Connection between dash. and left front door cables
91 Speaker in left front door
97 Earth on floor
100 Connection between dash. and left longitudinal cables
105 Ignition switch
119B Connection between dash. and right longitudinal cables
120 Connection between dashboard and right front door cables
131 Earth on steering column support
151 Amplifier for radio
164 Left rear speaker
166 Amplifier for aerial in rearscreen
169 Right rear speaker
178 Left rear earth
181 Connection between left longitudinal and right longitudinal cables
227 Right front speaker
228 Left front speaker
295 Radio cables connection
296 Radio cables connection
422 Connection between left longitudinal/dashboard cables
426 Speaker in tailgate (woofer)
428 Connection between left longitudinal/left tailgate cables for speaker
437 Preparation for radio phone
438 Dual function speaker for radio and hands-free radio phone in right front door
455 Dual function aerial for radio phone and radio nav. system
456 Connection for radio phone aerial
487 Connection for radio aerial supply
488 150A maxi fuse protecting electrical equipment
494 Radio navigation system
495 Con. between left longitudinal/radio nav. system cables

N.D. Ultrasound welding taped in cable loom

3U9191

90 Connection between dashboard and left front door cables

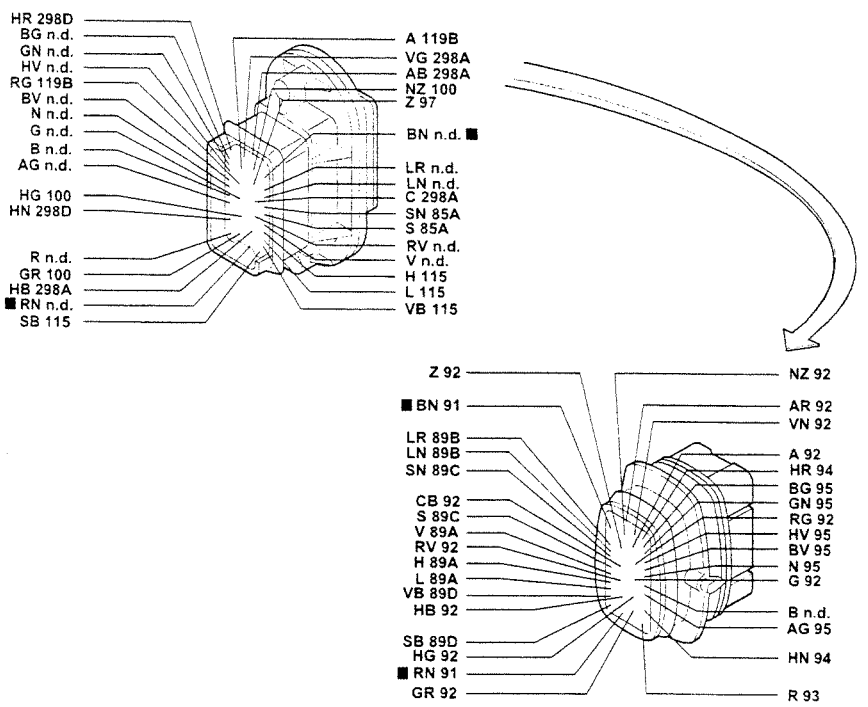

166A Rear cables connection in rearscreen

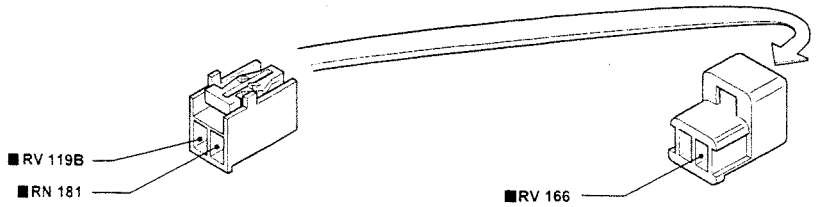

The cables in the wiring diagram are marked

P3U040101

3U9201

Naturally aspirated petrol versions

LANCIA-CODE device - (See key at end of wiring diagrams)

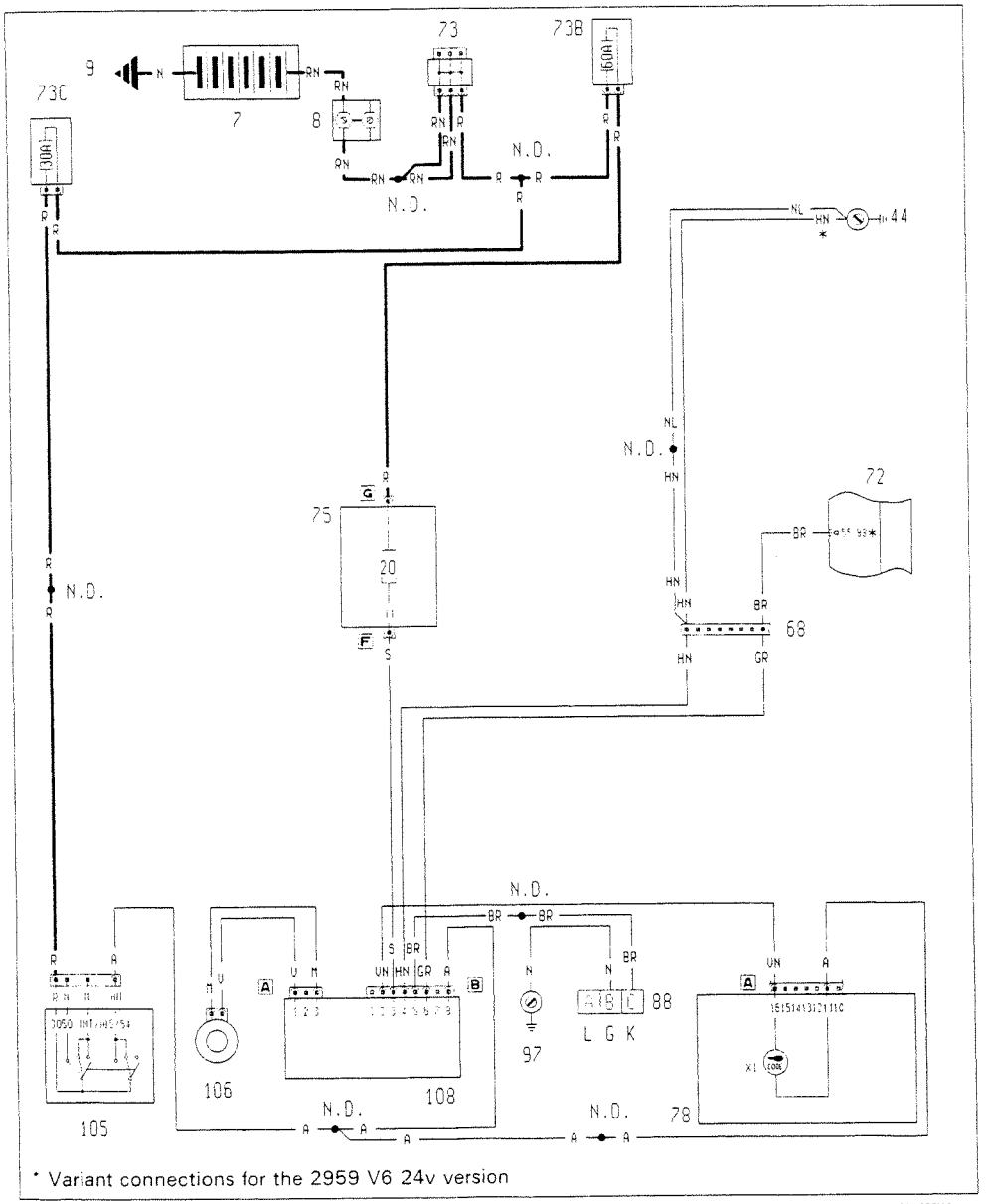

* Variant connections for the 2959 V6 24v version

P3U258119

3U9211

Location of components

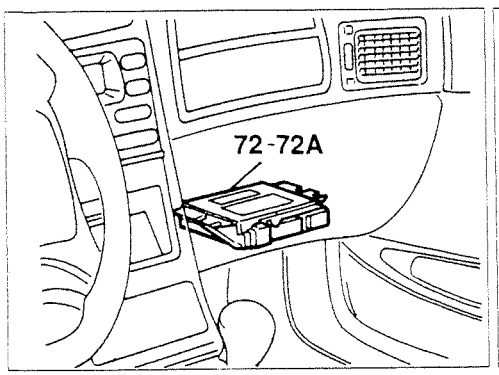

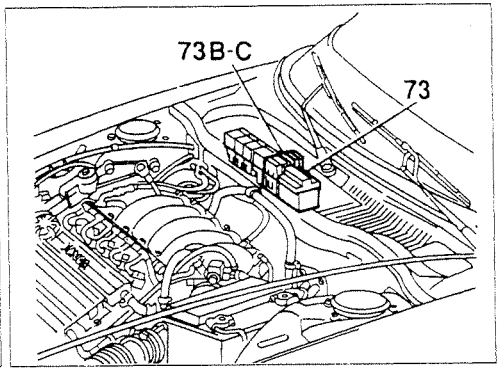

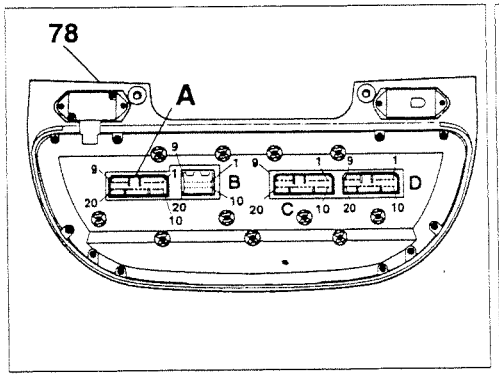

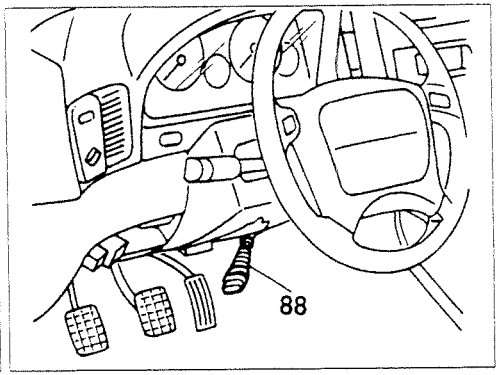

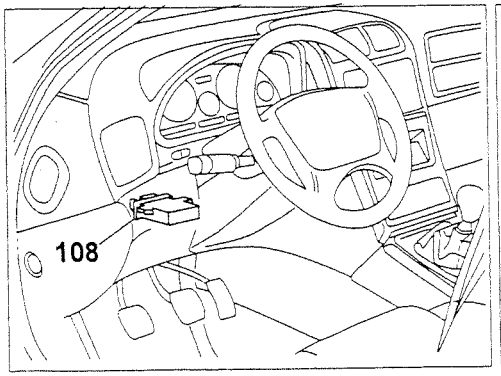

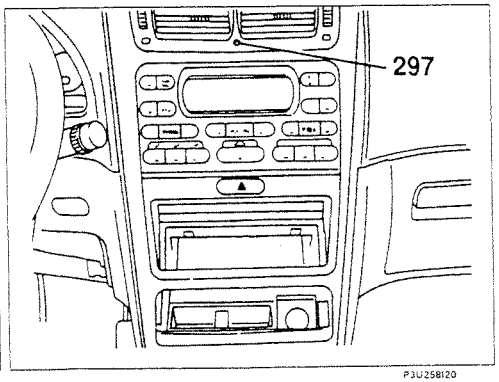

P3U258120

3U9221

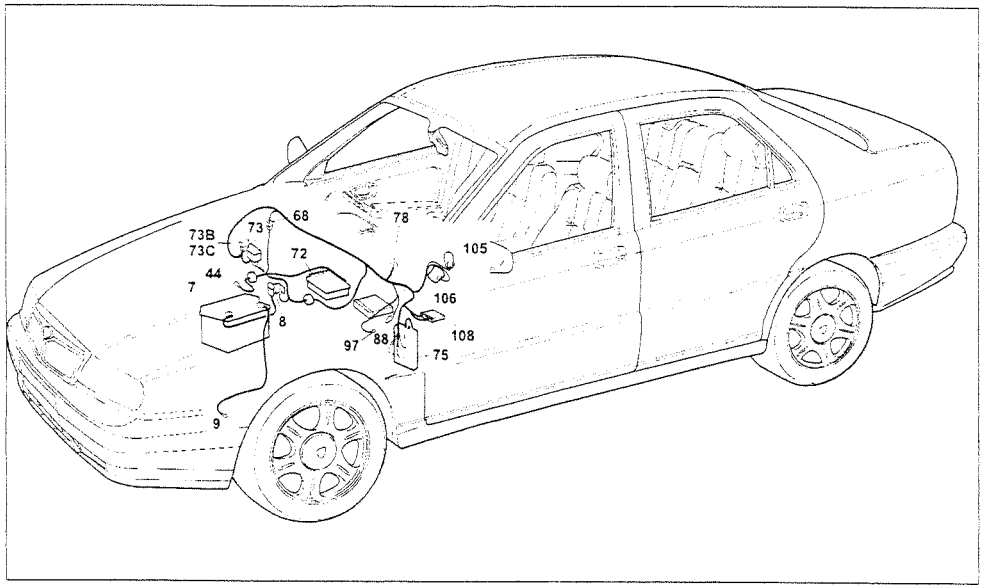

P3U258121

Naturally aspirated petrol versions
LANCIA-CODE device
Components key

7 Battery
8 Main connector block
9 Earth on bodyshell
44 Power earth
68 Connection between dashboard and electronic injection cables
72 Fuel injection control unit
73 Secondary connector block
73B 60A protective fuse for I.G.E. control unit / junction unit
73C 30A fuse protecting ignition switch / alarm device
75 Junction unit (dashboard)
78 Instrument panel
X1 LANCIA-CODE failure warning light
88 Diagnostic socket
97 Earth on floor
105 Ignition switch
106 LANCIA-CODE aerial
108 LANCIA-CODE control unit

N.D. Ultrasound welding taped in cable loom

3U9231

68 Connection between dashboard and electronic injection cables(Only for 1998/2446)

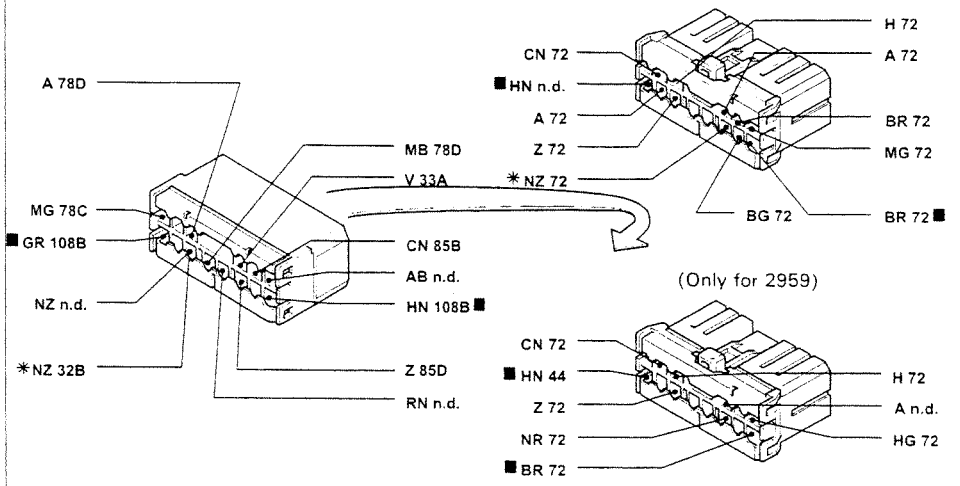

75F Junction unit (dashboard)

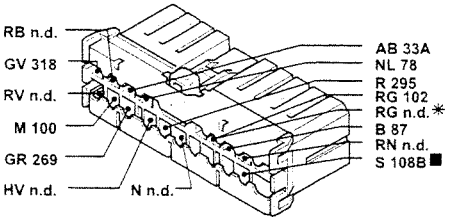

* Variant connection for 2959 versions with automatic transmission

75G Junction unit (dashboard)

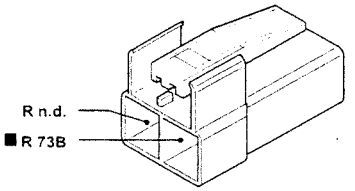

78A Instrument panel

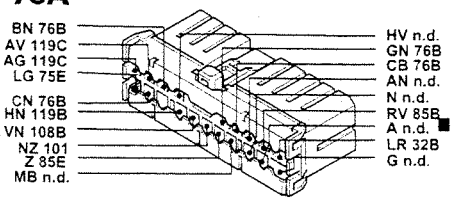

105 Ignition switch

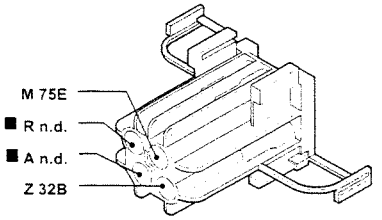

The cables in the wiring diagram are marked

P3U258122

3U9241

Turbo petrol versions

LANCIA-CODE device - (See key at end of wiring diagrams)

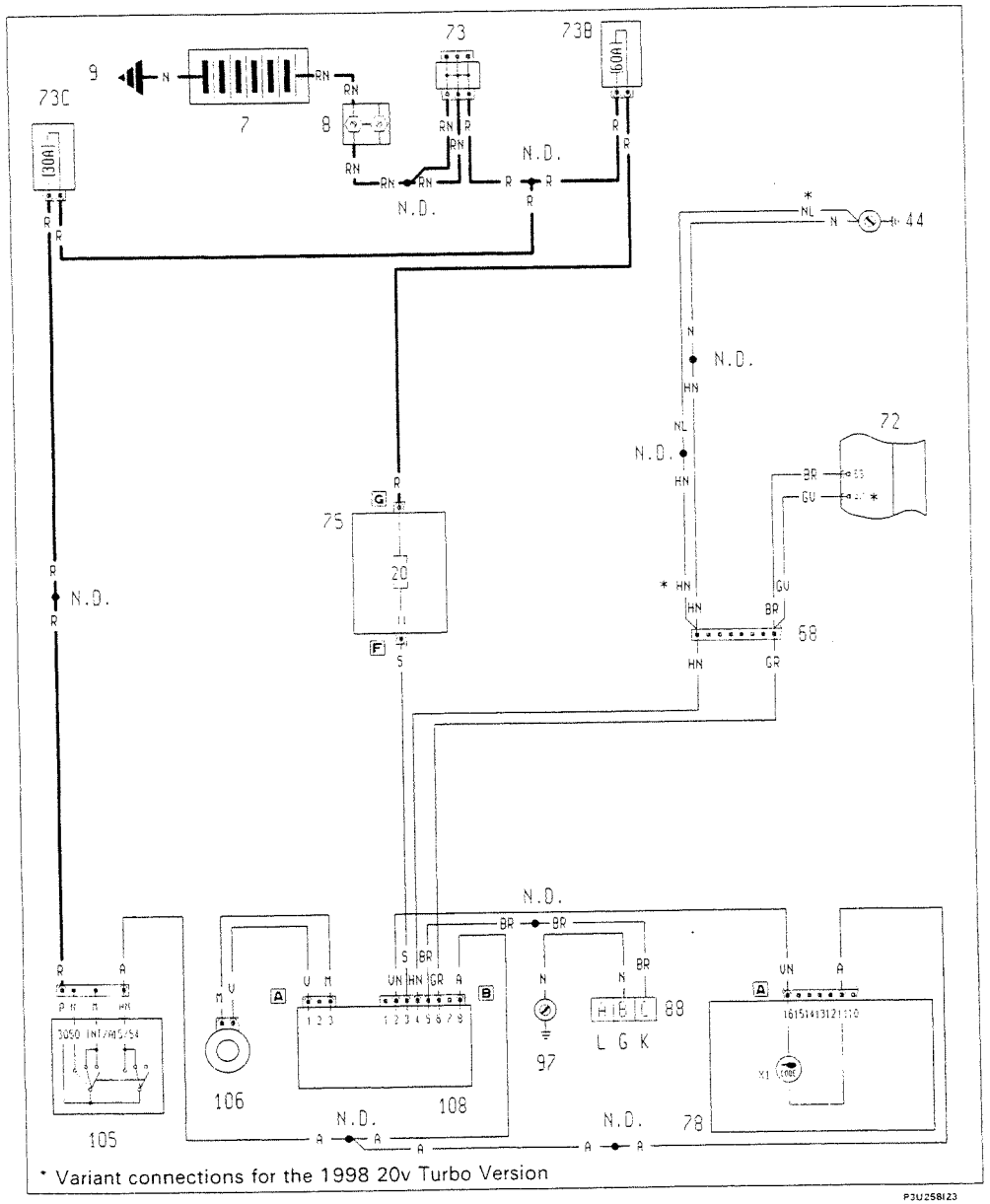

* Variant connections for the 1998 20v Turbo Version

P3U25813Z3

3U925I

Location of components

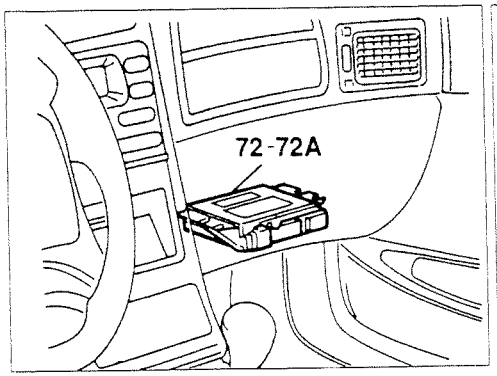

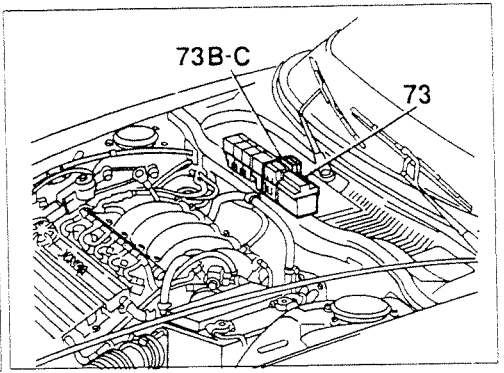

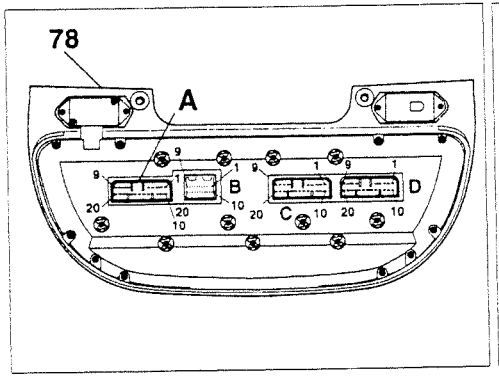

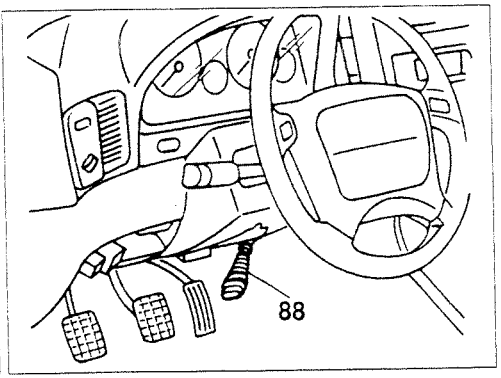

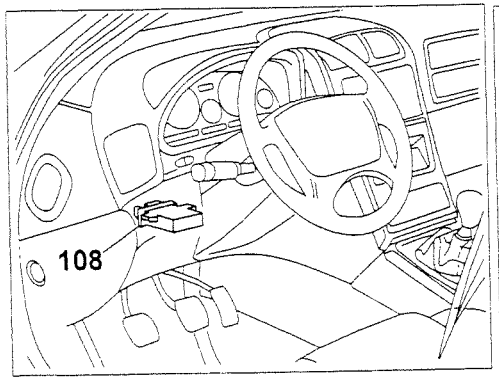

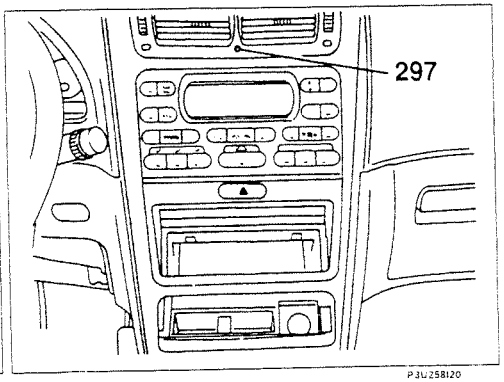

P3U25812O

3U926I

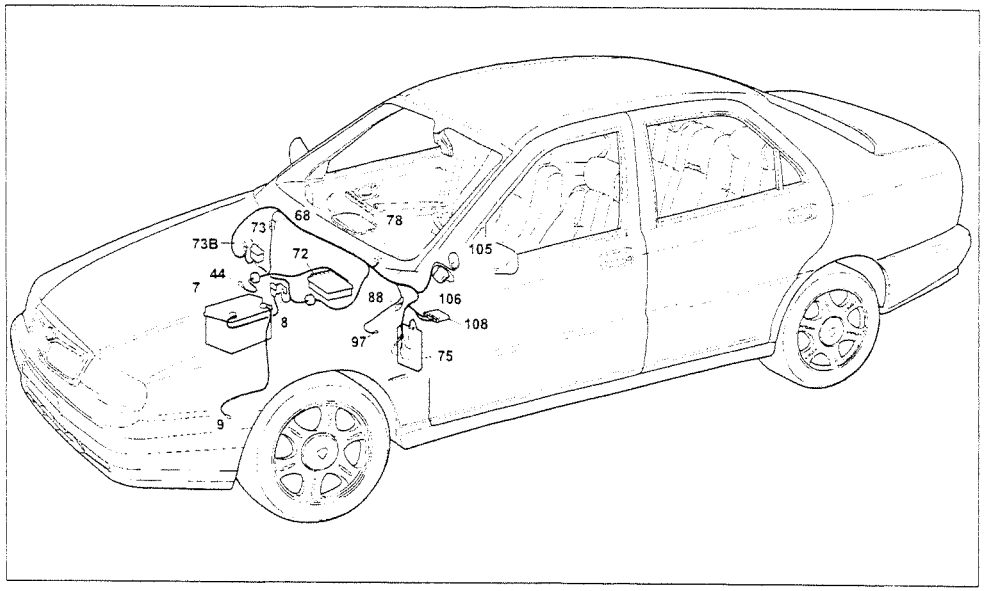

P3U258125

Turbo petrol versions

LANCIA-CODE device

Components key

7 Battery
8 Main connector block
9 Earth on bodyshell
44 Power earth
68 Connection between dash. and electronic injection cables
72 Fuel injection control unit
73 Secondary connector block
73B 60A protective fuse for I.G.E. control unit / junction unit
73C 30A fuse protecting ignition switch / alarm device
75 Junction unit (dashboard)
78 Instrument panel
X1 LANCIA-CODE failure warning light
88 Diagnostic socket
97 Earth on floor
105 Ignition switch
106 LANCIA-CODE aerial
108 LANCIA-CODE control unit
N.D. Ultrasound welding taped in cable loom

3U9271

68 Connection between dashboard and electronic injection cables

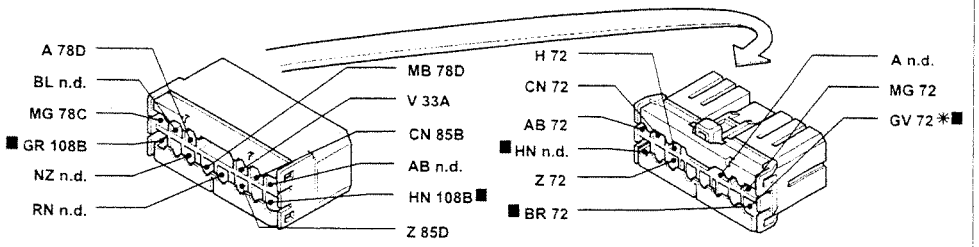

* Variant connection for 1998 20v T

73B 60A protective fuse for I.G.E. control unit/junction unit

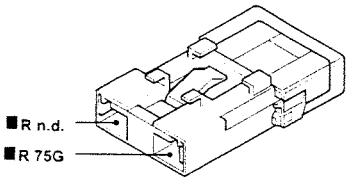

73C 30A fuse protecting ignition switch/alarm device

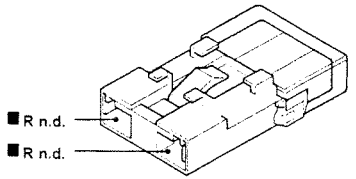

75F Junction unit (dashboard)

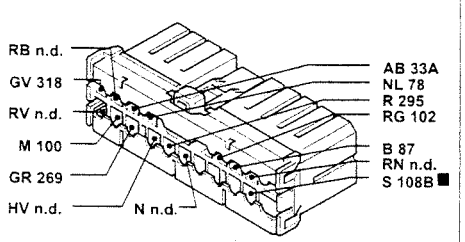

75G Junction unit (dashboard)

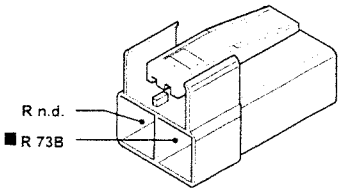

78A Instrument panel

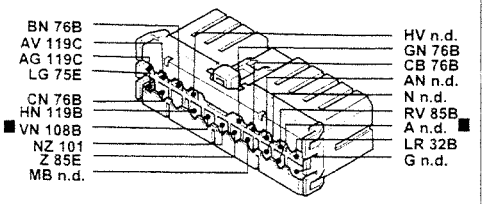

105 Ignition switch

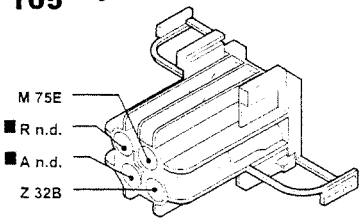

The cables in the wiring diagram are marked

P3U258126

3U9281

TD versions

LANCIA-CODE device - (See key at end of wiring diagrams)

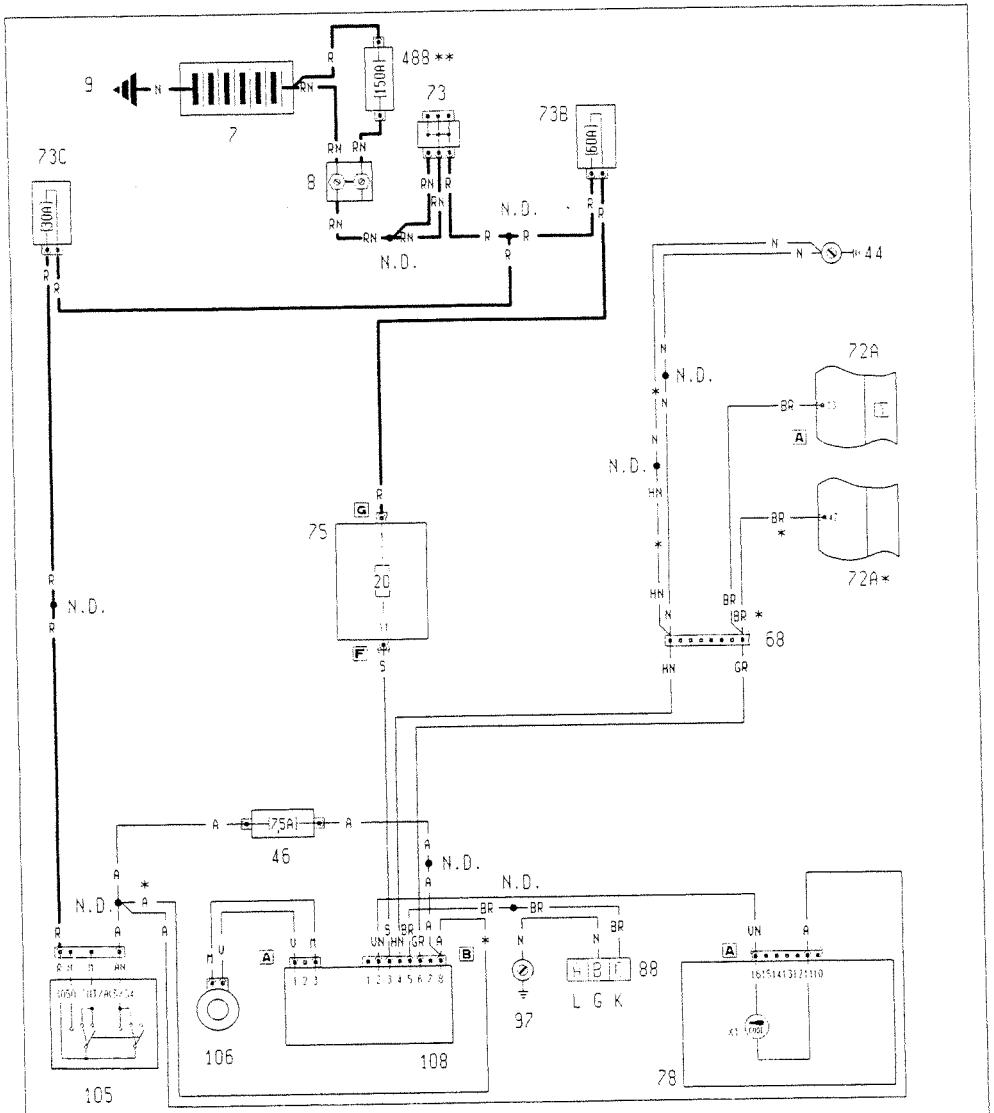

* Variant connections for the 2387 TD version

P3U258127

3U9291

Location of components

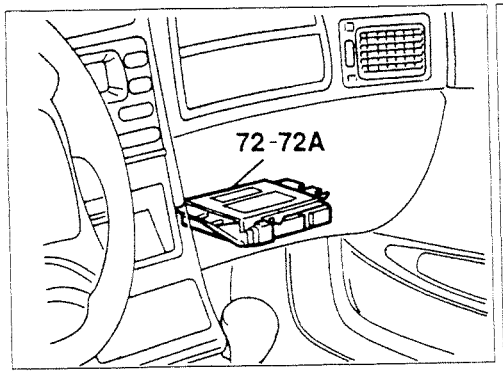

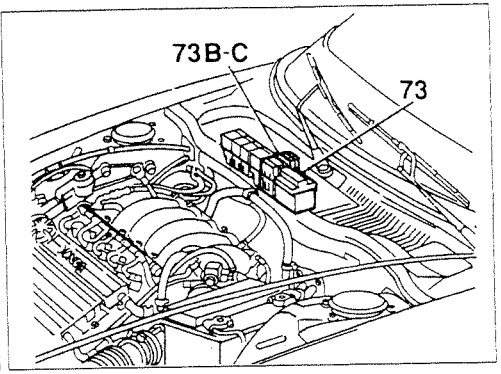

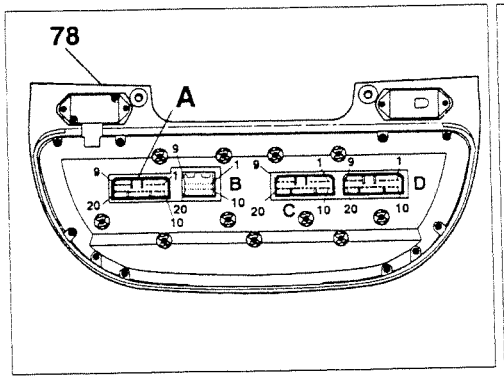

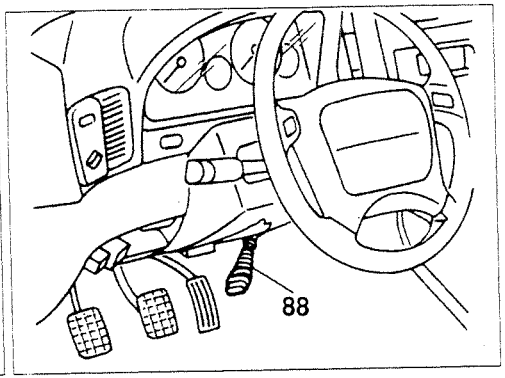

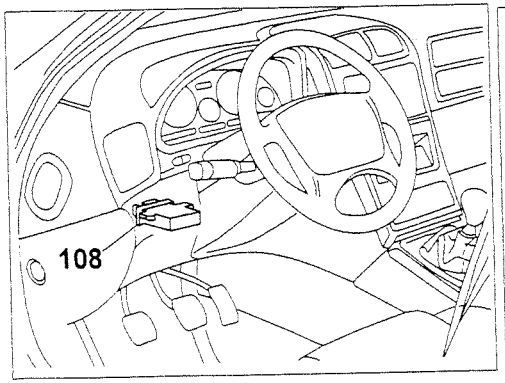

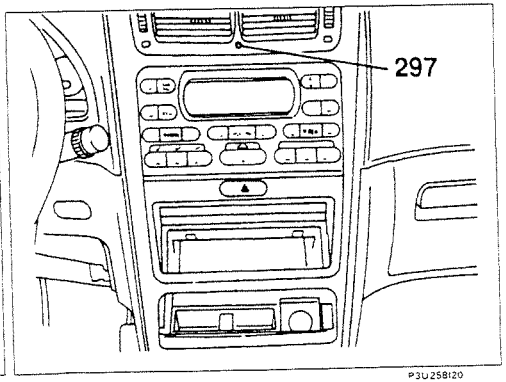

P3U258120

3U9301

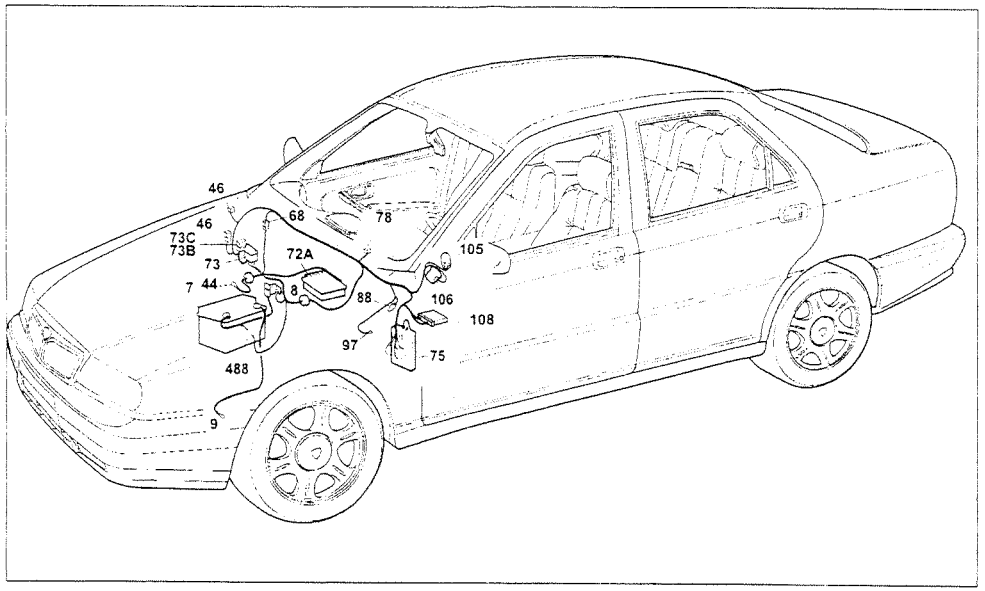

P3U258I29

TD versions

LANCIA-CODE device

Components key

7 Battery
8 Main connector block
9 Earth on bodyshell
44 Power earth
46 7.5A fuse protecting electronic injection and LANCIA-CODE control unit
68 Connection between dash. and electronic injection cables
72A Fuel pump electronic control unit
73 Secondary connector block
73B 60A protective fuse for I.G.E. control unit / junction unit
73C 30A fuse protecting ignition switch / alarm device
75 Junction unit (dashboard)
78 Instrument panel
X1 LANCIA-CODE failure warning light
88 Diagnostic socket
97 Earth on floor
105 Ignition switch
106 LANCIA-CODE aerial
108 LANCIA-CODE control unit
488 150A maxi fuse protecting electrical equipment

N.D. Ultrasound welding taped in cable loom

3U931I

68 Connection between dashboard and electronic injection cables

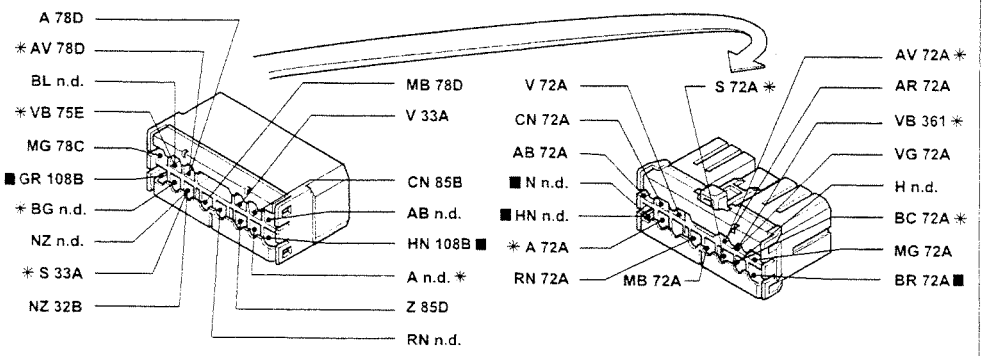

* Variant connection for 2387 JTD

75F Junction unit (dashboard)

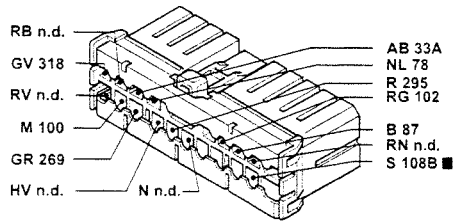

75G Junction unit (dashboard)

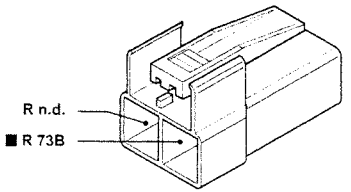

73B 60A protective fuse for I.G.E. control unit/junction unit

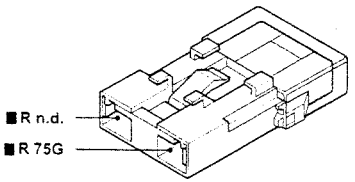

73C 30A fuse protecting ignition switch/alarm

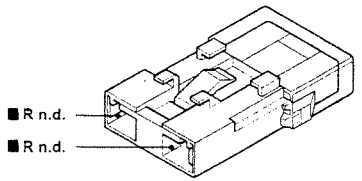

The cables in the wiring diagram are marked

P3U052I01

3U932I

Headlamp alignment with exhaust gas headlamps - (See key at end of wiring diagrams)

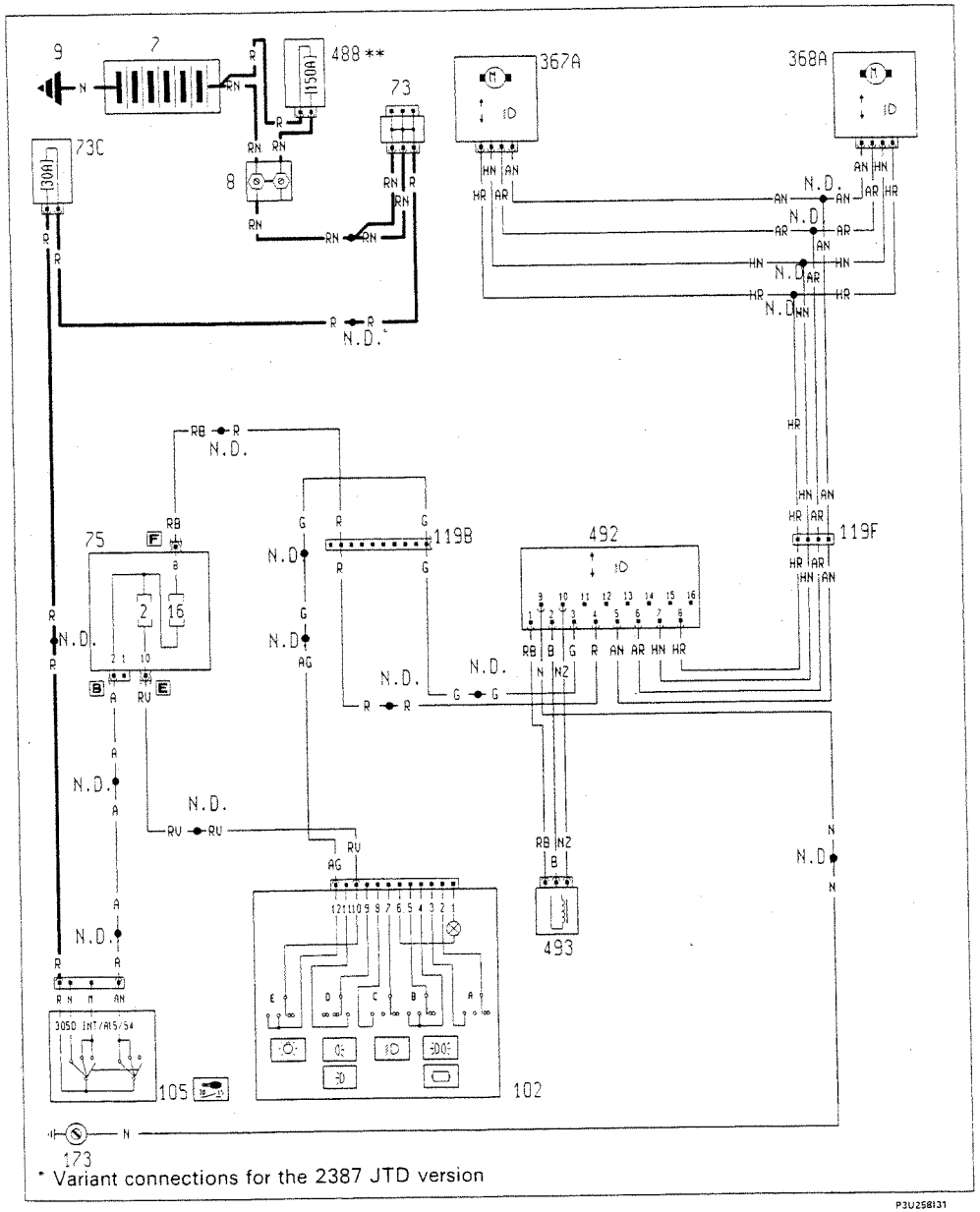

* Variant connections for the 2387 JTD version

P3U258131

3U9331

Location of components

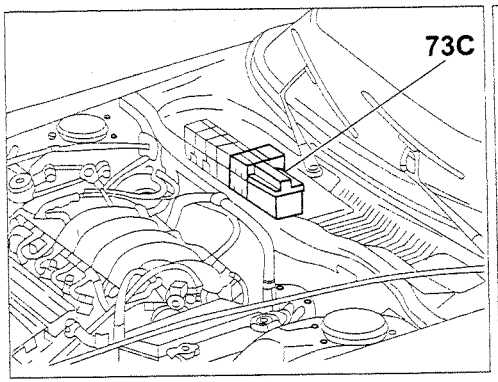

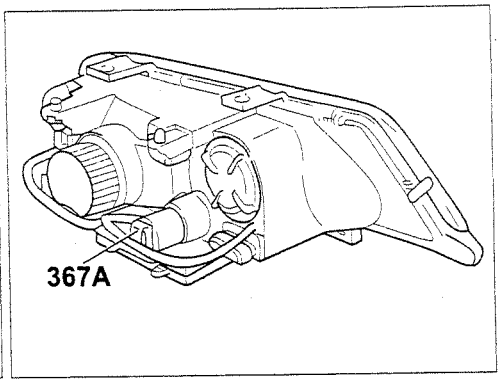

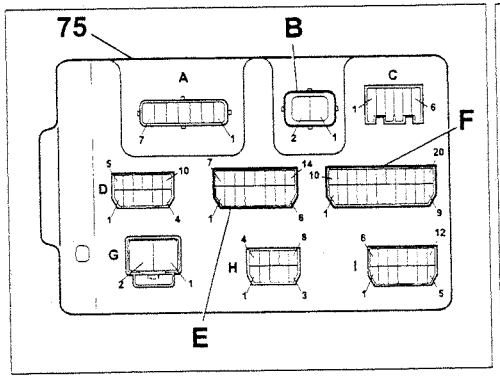

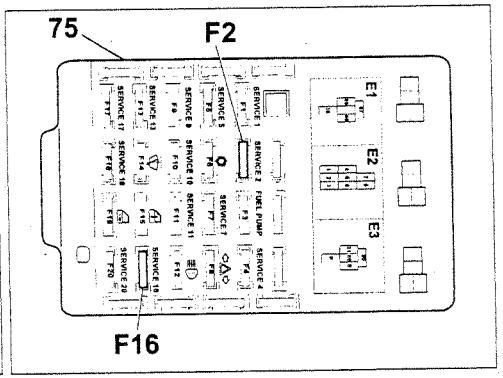

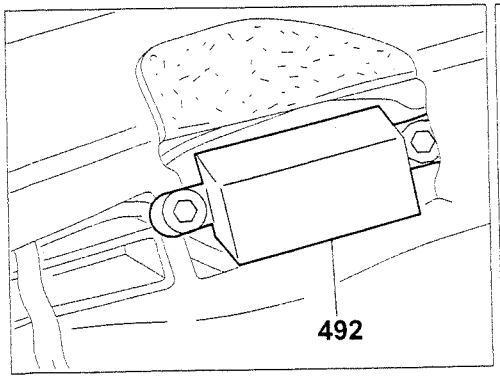

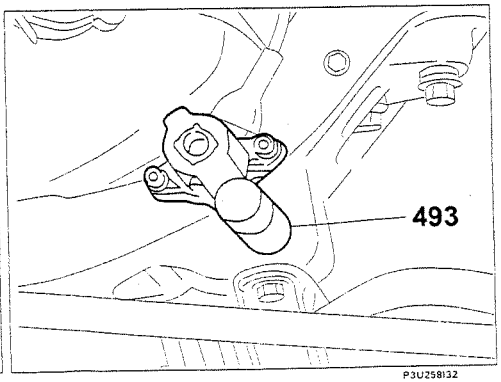

P3U258132

3U9341

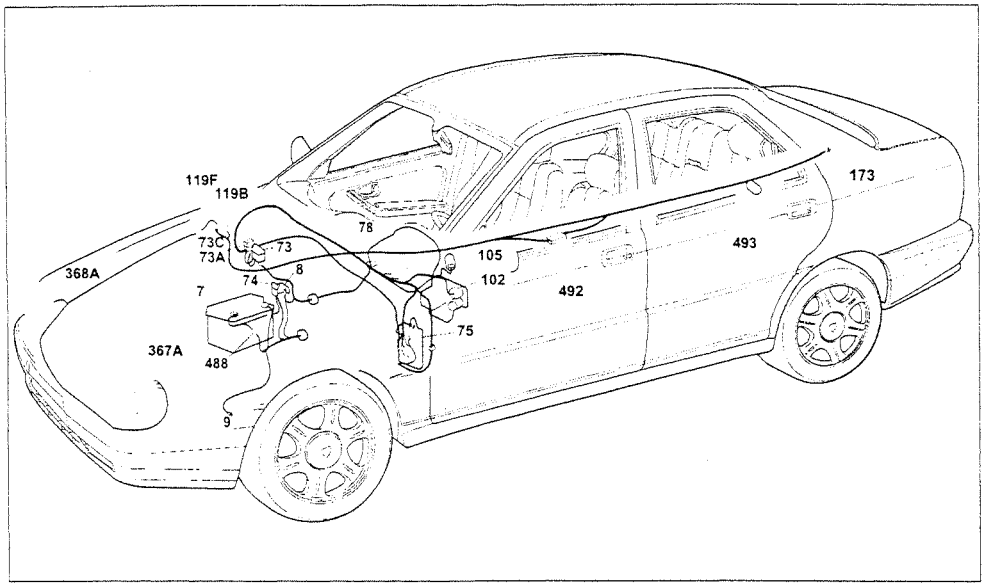

P3U258133

Headlamp alignment with exhaust gas headlamps

Components key

7 Battery
8 Main connector block
9 Earth on bodyshell
73 Secondary connector block
73C 30A fuse protecting ignition switch/alarm device
75 Junction unit (dashboard)
102 Exterior lights control unit
A Switch for preparation for dipped headlamps signal
B Switch for side lights/number plate lights
C Switch for dipped headlamps/main beam headlamps
D Parking lights control switch
E Ideogram lights control switch
105 Ignition switch
119B Connection between dash. and right longitudinal cables
119F Connection between right front and right longitudinal cables
173 Right rear earth
367A Left headlamp alignment with exhaust gas lamp
368A Right headlamp alignment with exhaust gas lamp
488 150A maxi fuse protecting electrical equipment
492 Electronic control unit for headlamp alignment
493 Vehicle geometry sensor

3U935I

119B Connection between dashboard and right longitudinal cables

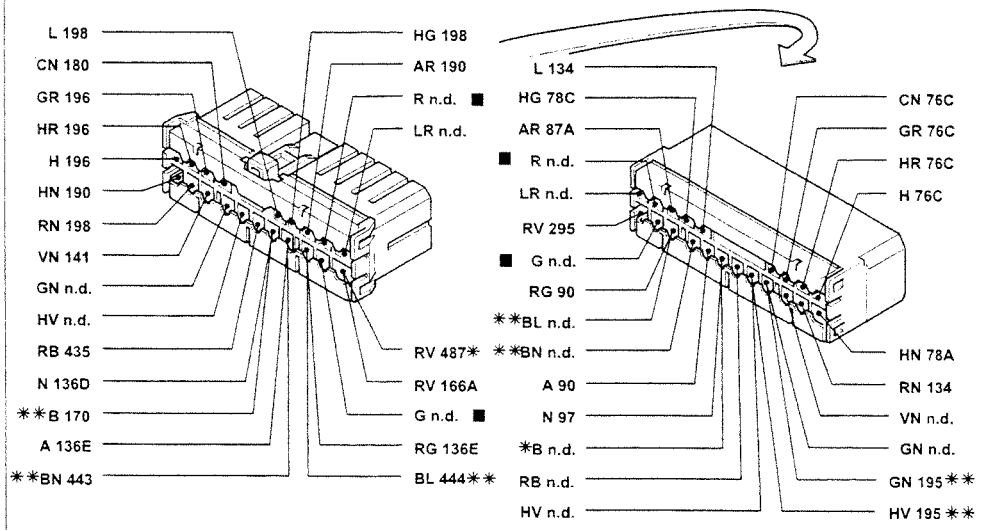

* Variant connection for Station Wagon versions
* Variant connection for COUPE' versions

119F Connection between dashboard and right longitudinal cables

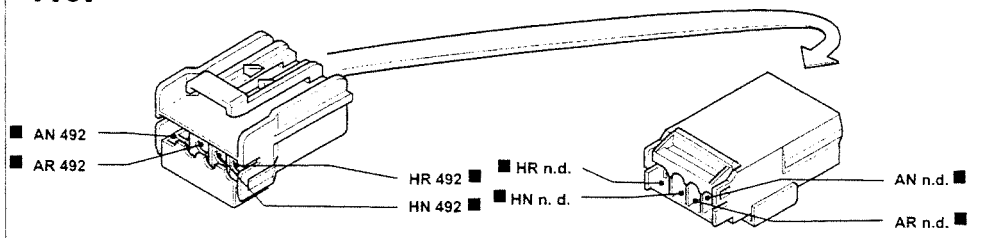

75B Junction unit (dashboard)

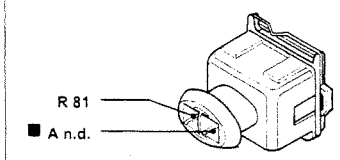

75E Junction unit (dashboard)

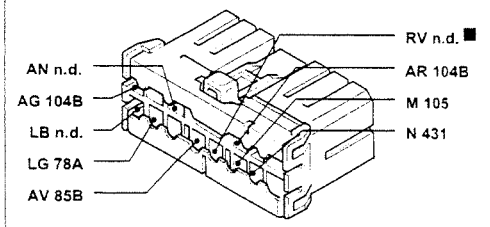

The cables in the wiring diagram are marked

P3U258134

3U936I

Parking lights and warning lamp - Exhaust gas dipped beam headlamps and warning light - Main beam headlamps and warning light - Parking lights - Headlamp flasher - Number plate lights - (See key at end of wiring diagrams)

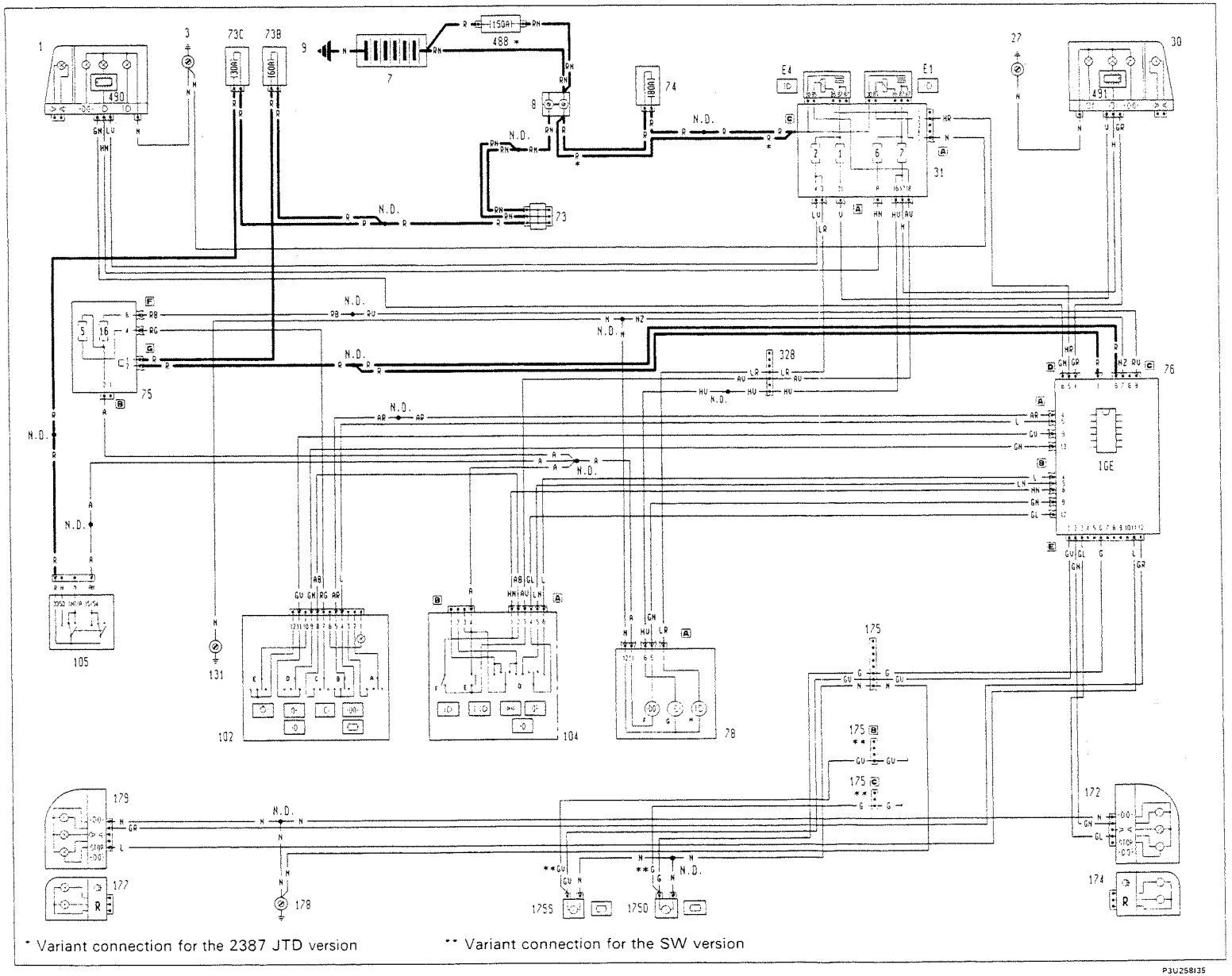

* Variant connection for the 2387 JTD version

** Variant connection for the SW version

P3U258I35

3U937I

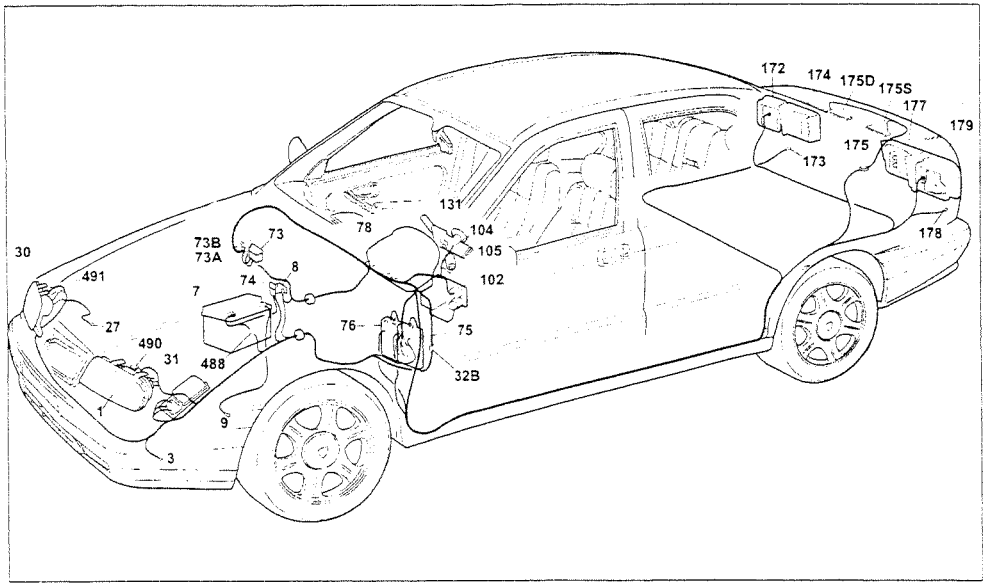

P3U258136

Parking lights and warning lamp - Exhaust gas dipped beam headlamps and warning light - Main beam headlamps and warning light - Parking lights - Headlamp flasher - Number plate lights

Components key

1 Left front light cluster
3 Left front earth
7 Battery
8 Main connector block
9 Earth on bodyshell
27 Right front earth
30 Right front light cluster
31 Peripheral control unit (engine compartment)
E1 Dipped headlamps relay feed
E4 Main beam headlamps relay feed
32B Connection between dash and left engine compartment cables
73 Secondary connector block
73B 60A protective fuse for I.G.E. control unit / junction unit
73C 30A fuse protecting ignition switch / anti-theft device
74 80A fuse protecting peripheral control unit (engine compartment)
75 Junction unit (dashboard)
76 I.G.E. control unit
78 Instrument panel
F Side lights warning light
G Dipped headlamps warning light
H Main beam headlamps warning light
102 Exterior lights control unit
A Switch for preparation for main beam headlamps signal
B Switch for side lights / number plate lights
C Switch for dipped beam headlamps / main beam headlamps
D Parking lights control switch
E Ideogram lights control switch
104 Steering column switch unit
D Switch for direction indicators / parking lights
E Main beam headlamps flasher button
F Main beam headlamps control switch
105 Ignition switch
131 Earth on steering column support
172 Right rear light cluster on fixed section
174 Right rear light cluster on movable section
175 Connection between left longitudinal and tailgate cables
175S Left no. plate light
175D Right no. plate light
177 Left rear light cluster on movable section
178 Left rear earth
179 Left rear light cluster on fixed section
488 150A maxi fuse protecting electrical equipment
490 Electronic control unit for left exhaust gas headlamp (Ballast)
491 Electronic control unit for right exhaust gas headlamp (Ballast)

N D. Ultrasound welding taped in cable loom

3U9381

32B Connection between dashboard and left engine compartment cables

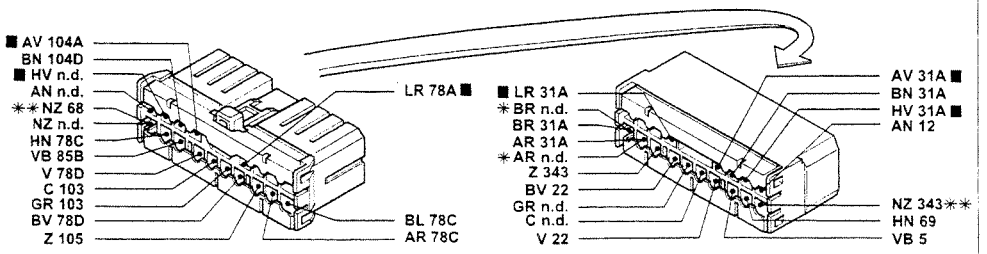

* Variant connection for Turbo Diesel versions
** Variant connection for 1998/2446/2959 versions with automatic transmission

175 Connection between left longitudinal and tailgate cables

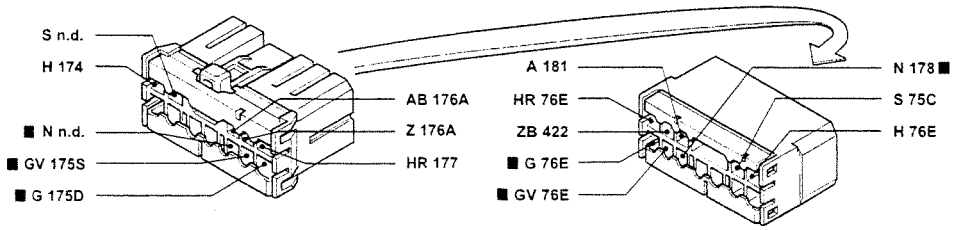

175 Connection between left longitudinal and tailgate cables (Only for Station Wagon versions)

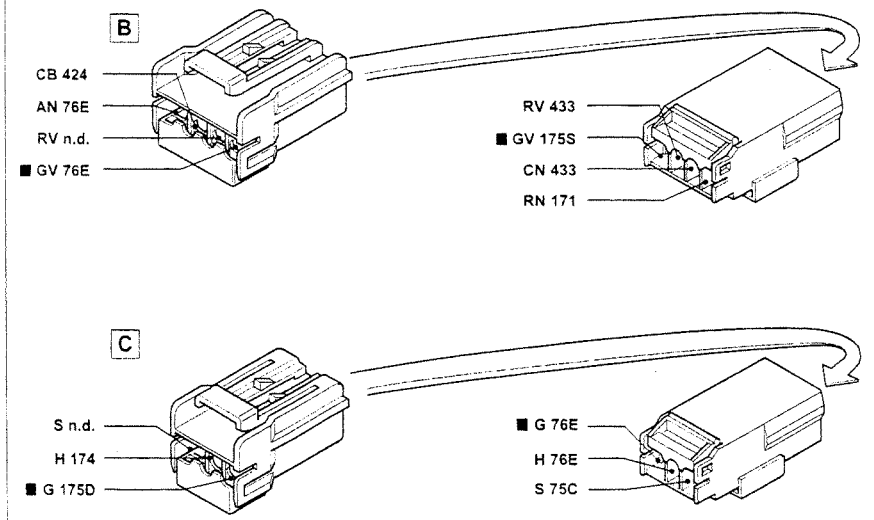

The cables in the wiring diagram are marked

P3U104101

3U9391

Air-bag and failure warning light - Passenger presence sensor - Seat belt pretensioners - Servotronic device - (See key at end of wiring diagrams)

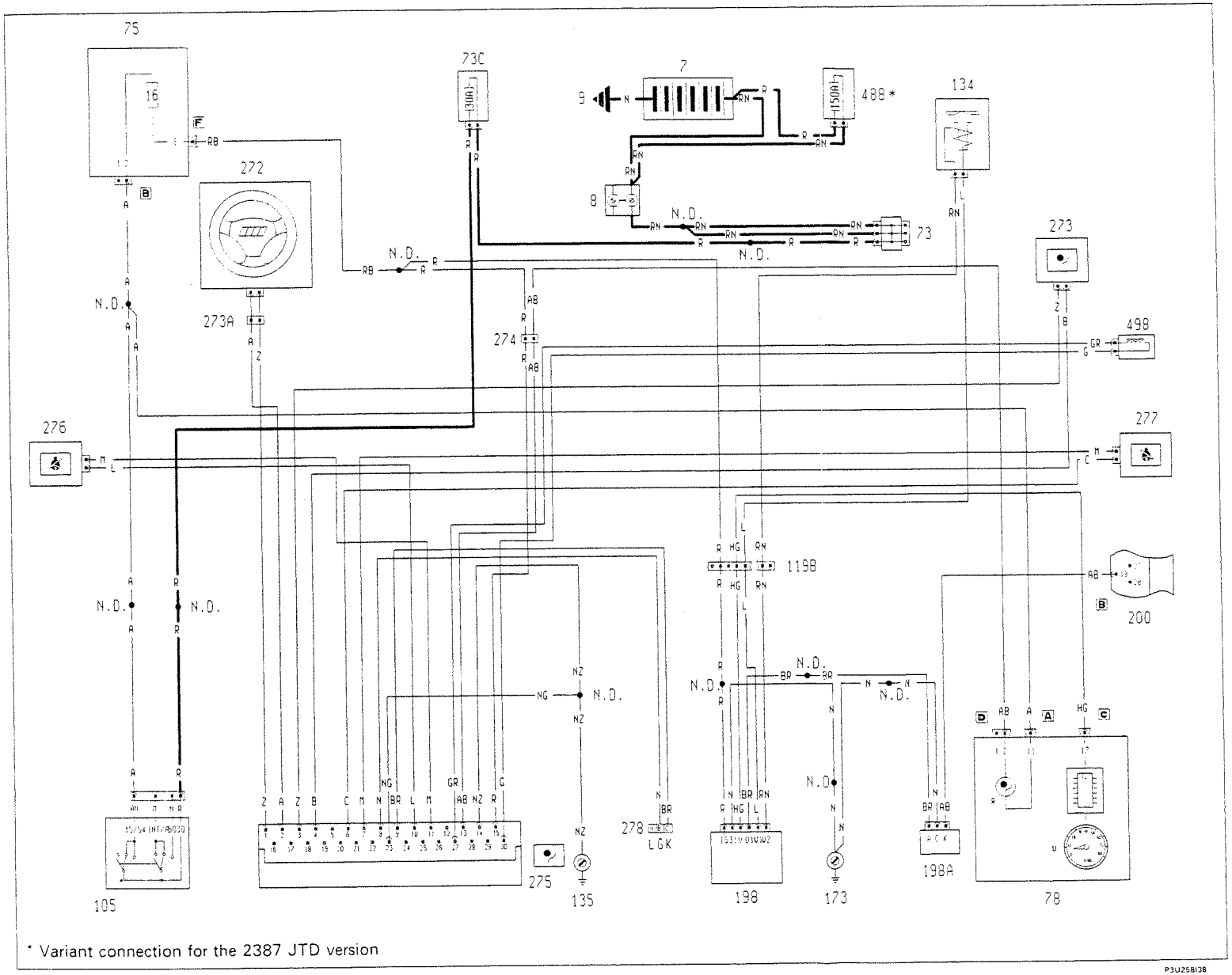

* Variant connection for the 2387 JTD version

P3U25813B

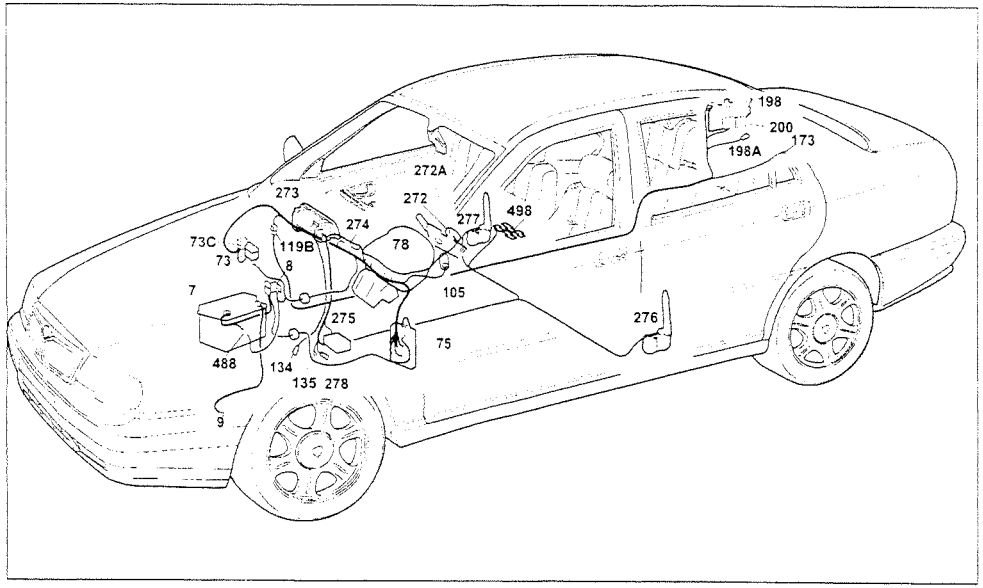

P3U258139

Air-bag and failure warning light - Passenger presence sensor- Seat belt pretensioners - Servotronic device

Components key

7 Battery
8 Main connector block
9 Earth on bodyshell
73 Secondary connector block
73C 30A fuse protecting ignition switch/anti-theft device
75 Junction unit (dashboard)
78 Instrument panel
R AIR-BAG failure warning light
U Electronic rev counter
105 Ignition switch
119B Connection between dash and right longitudinal cables
134 Servotronic solenoid valve
135 Earth on floor (signal for AIR-BAG)
173 Right rear earth
198 Servotronic electronic control unit
198A Diagnostic socket
200 Controlled damping suspension electronic control unit (S.C.S)
272 Driver's AIR-BAG connection
273 Passenger AIR-BAG connection
273A Connection for clock spring
274 Connection between dashboard and AIR-BAG cables
275 AIR-BAG control unit
276 Left seat belt pretensioner
277 Right seat belt pretensioner
278 Diagnostic socket for AIR-BAG
488 150A maxi fuse protecting electrical equipment
498 Passenger presence sensor for AIR-BAG

N.D. Ultrasound welding taped in cable loom

3U9411

119B Connection between dashboard and right longitudinal cables

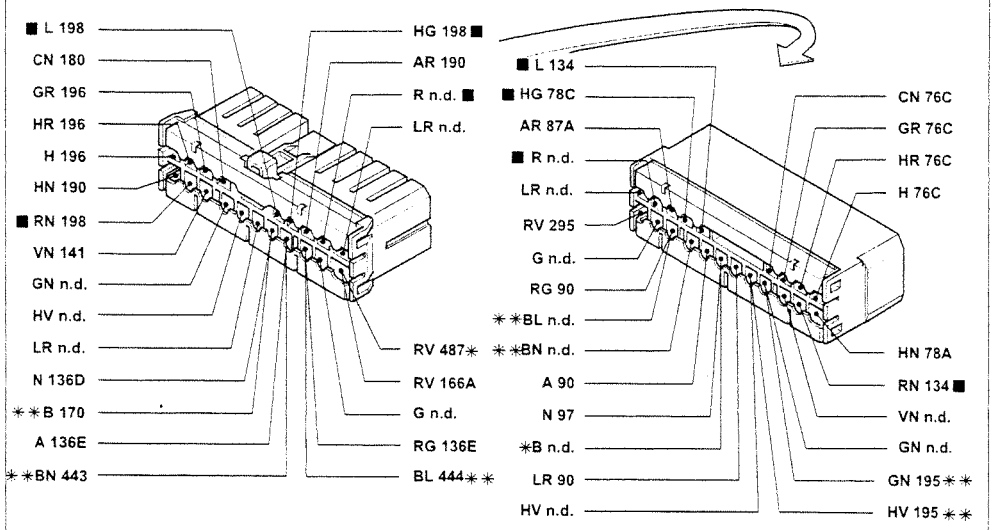

* Variant connection for Station Wagon versions

** Variant connection for COUPE' versions

273A Passenger AIR-BAG connection

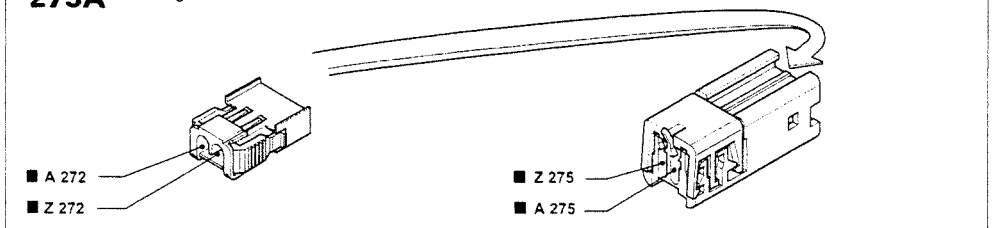

274 Connection between dashboard and AIR-BAG cables

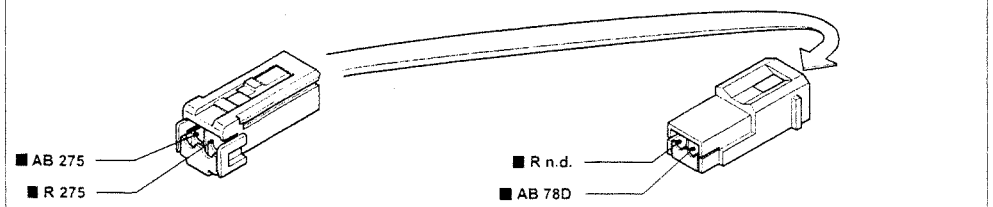

The cables in the wiring diagram are marked

P3U168101

3U942I

Driver's AIR-BAG and failure warning light - Seat belt pretensioners - Servotronic device - (See key at end of wiring diagrams)

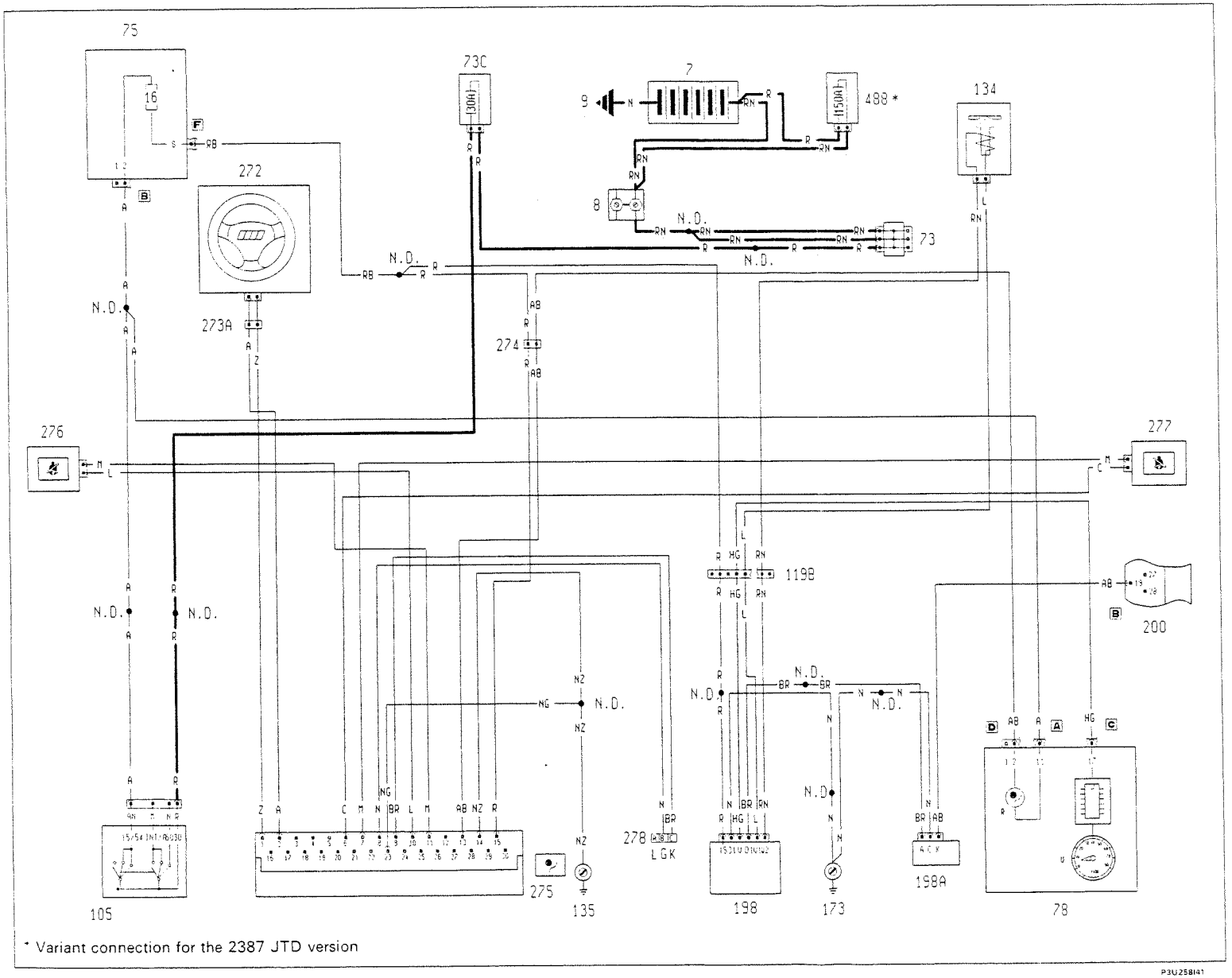

3U943I

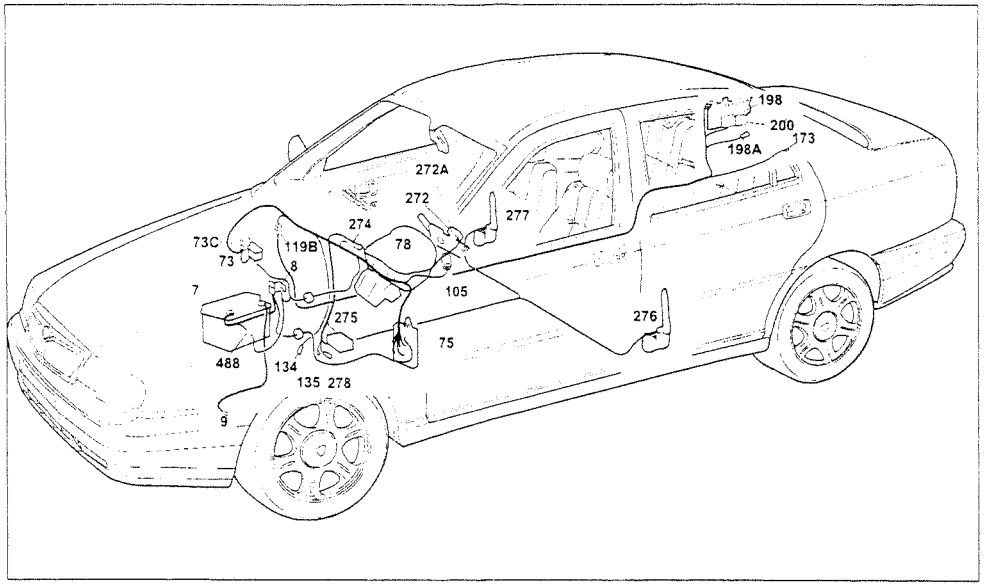

P3U258142

Driver's AIR-BAG and failure warning light - Seat belt pretensioners - Servotronic device

Components key

7 Battery
8 Main connector block
9 Earth on bodyshell
73 Secondary connector block
73C 30A fuse protecting ignition switch/anti-theft device
75 Junction unit (dashboard)
78 Instrument panel
R AIR-BAG failure warning light
U Electronic rev counter
105 Ignition switch
119B Connection between dash and right longitudinal cables
134 Servotronic solenoid valve
135 Earth on floor (signal for AIR-BAG)
173 Right rear earth
198 Servotronic electronic control unit
198A Diagnostic socket
200 Controlled damping suspension electronic control unit (S.C.S)
272 Driver's AIR-BAG connection
273A Passenger AIR-BAG connection
274 Connection between dashboard and AIR-BAG cables
275 AIR-BAG control unit
276 Left seat belt pretensioner
277 Right seat belt pretensioner
278 Diagnostic socket for AIR-BAG
488 150A maxi fuse protecting electrical equipment
N.D. Ultrasound welding taped in cable loom

3U944I

119B Connection between dashboard and right longitudinal cables

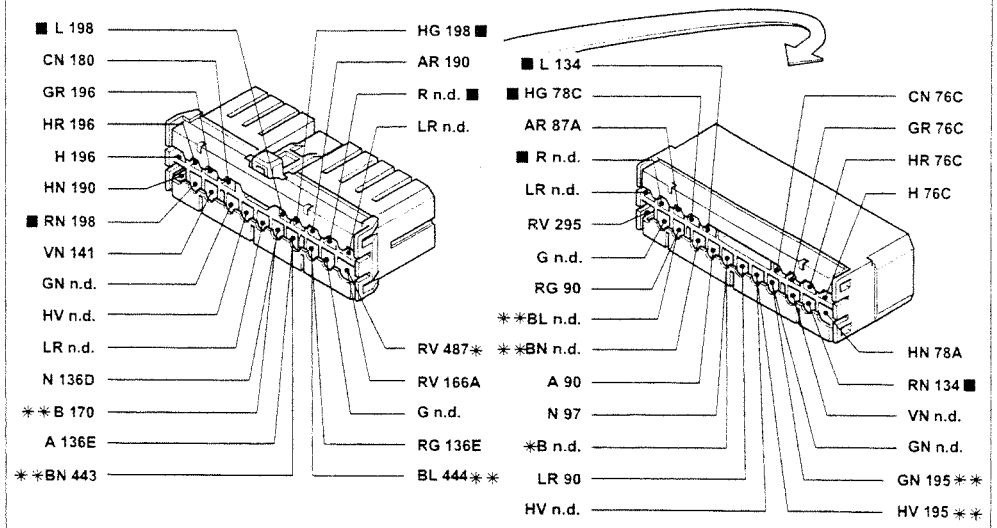

* Variant connection for Station Wagon versions

** Variant connection for COUPE' versions

273A Driver's AIR-BAG connection

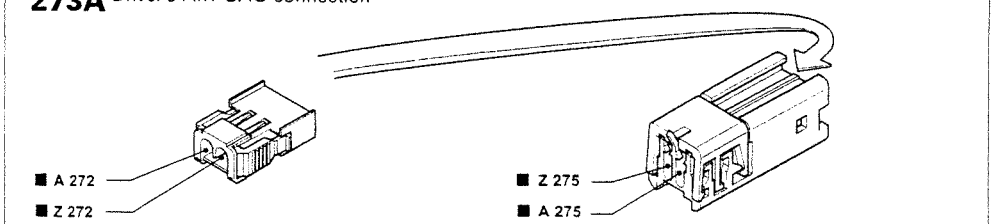

274 Connection between dashboard and AIR-BAG cables

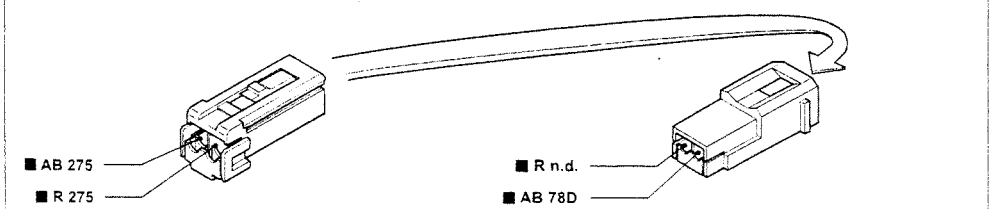

The cables in the wiring diagram are marked

P3U168101

3U945I

Air-bag and failure warning light - Passenger presence sensor - Seat belt pretensioners - SIDE-BAG - Servotronic device -
(See key at end of wiring diagrams)

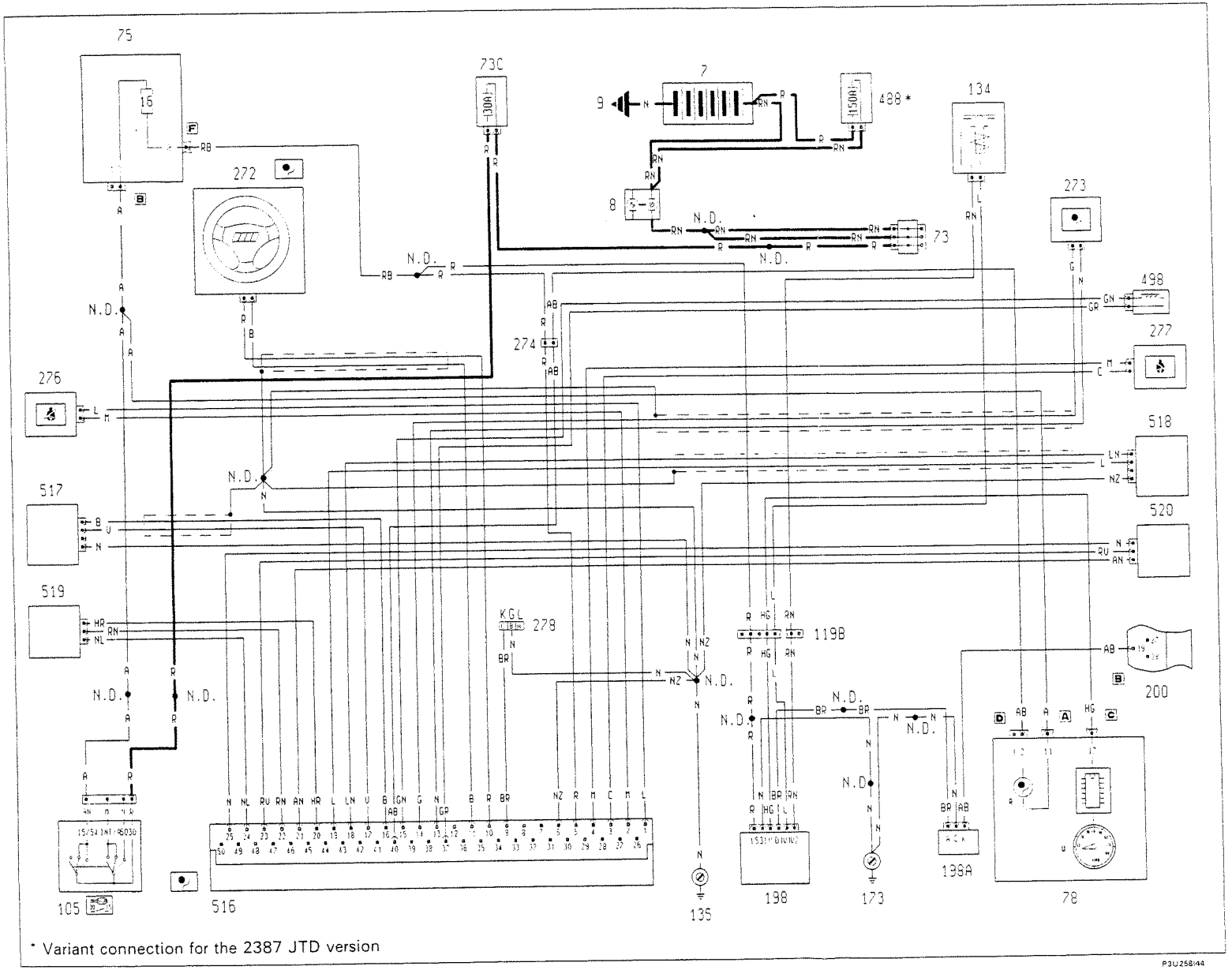

* Variant connection for the 2387 JTD version

P3U258144

3U946I

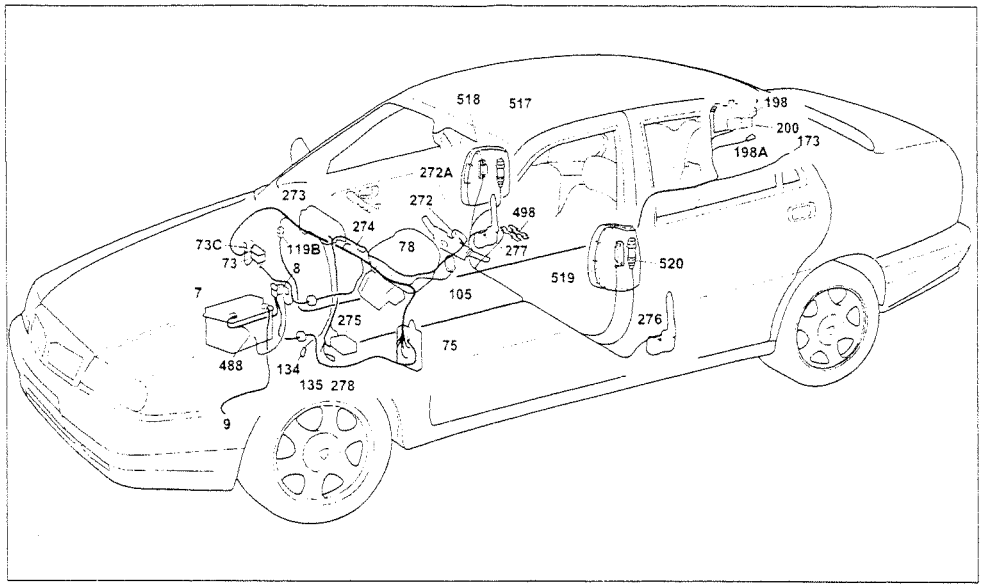

P3U258145

Air-bag and failure warning light - Passenger presence sensor - Seat belt pretensioners - SIDE-BAG - Servotronic device

Components key

7 Battery
8 Main connector block
9 Earth on bodyshell
73 Secondary connector block
73C 30A fuse protecting ignition switch/anti-theft device
75 Junction unit (dashboard)
78 Instrument panel
R AIR-BAG failure warning light
U Electronic rev counter
105 Ignition switch
119B Connection between dash. and right longitudinal cables
134 Servotronic solenoid valve
135 Earth on floor (signal for AIR-BAG)
173 Right rear earth
198 Servotronic electronic control unit
198A Diagnostic socket
200 Controlled damping suspension electronic control unit (S.C.S)
272 Driver's AIR-BAG connection
273 Passenger AIR-BAG connection
274 Connection between dashboard and AIR-BAG cables
276 Left seat belt pretensioner
277 Right seat belt pretensioner
278 Diagnostic socket for AIR-BAG
488 150A maxi fuse protecting electrical equipment
498 Passenger presence sensor for AIR-BAG
516 AIR-BAG/SIDE-BAG control unit
517 Driver's SIDE-BAG module
518 Passenger SIDE-BAG module
519 Driver's satellite deceleration sensor (side impact recognition)
520 Passenger satellite deceleration sensor (side impact recognition)

N.D. Ultrasound welding taped in cable loom

3U9471

119B Connection between dashboard and right longitudinal cables

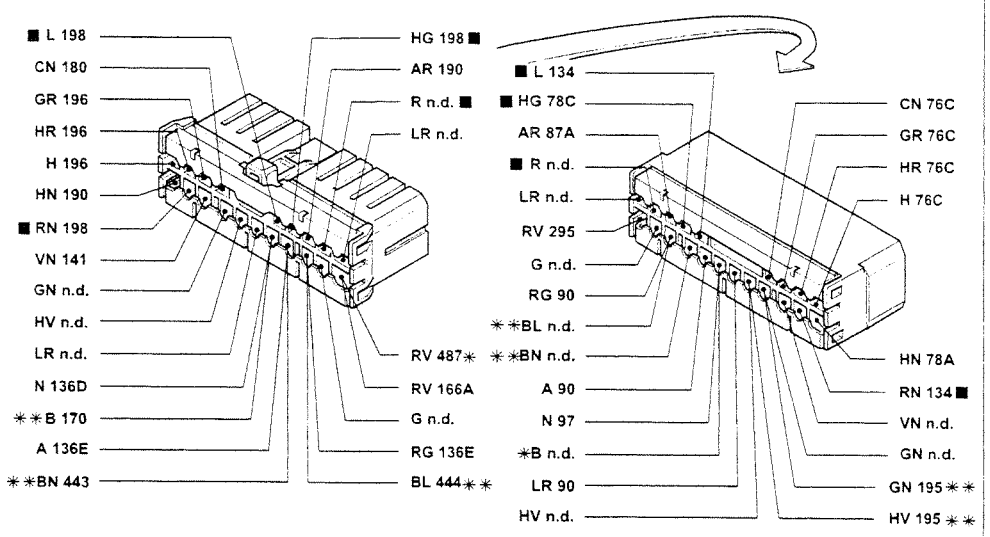

* Variant connection for Station Wagon versions

** Variant connection for COUPE' versions

273A Passenger AIR-BAG connection

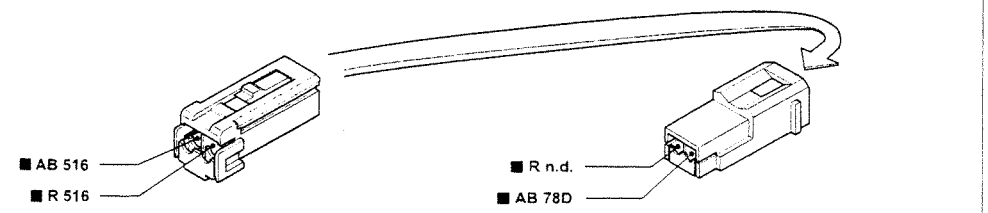

519 Driver's satellite deceleration sensor

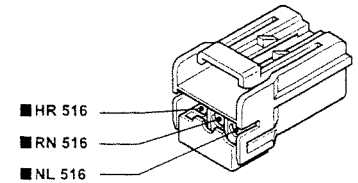

520 Passenger satellite deceleration sensor

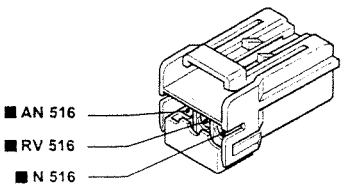

The cables in the wiring diagram are marked

P3U258146

3U9481

Electrical equipment

Diagrammatic views

55.

Diagrammatic view of location of cable looms and components (See key at end of wiring diagrams with the co-ordinates referring to the components)

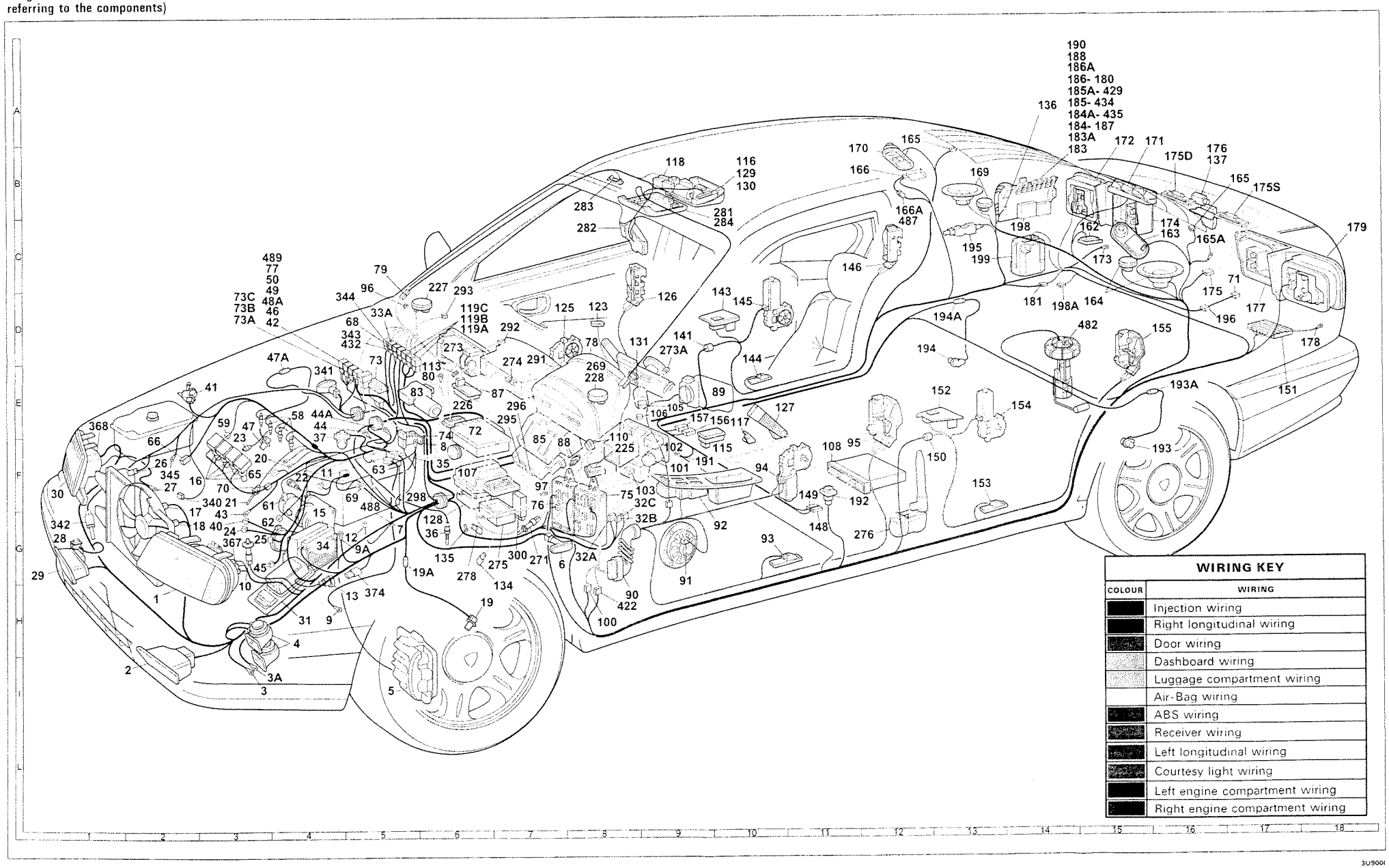

3U3371

3U9001

Copyright by Fiat Auto

Diagrammatic view of location of cable looms and components (See key at end of wiring diagrams with the co-ordinates referring to the components)

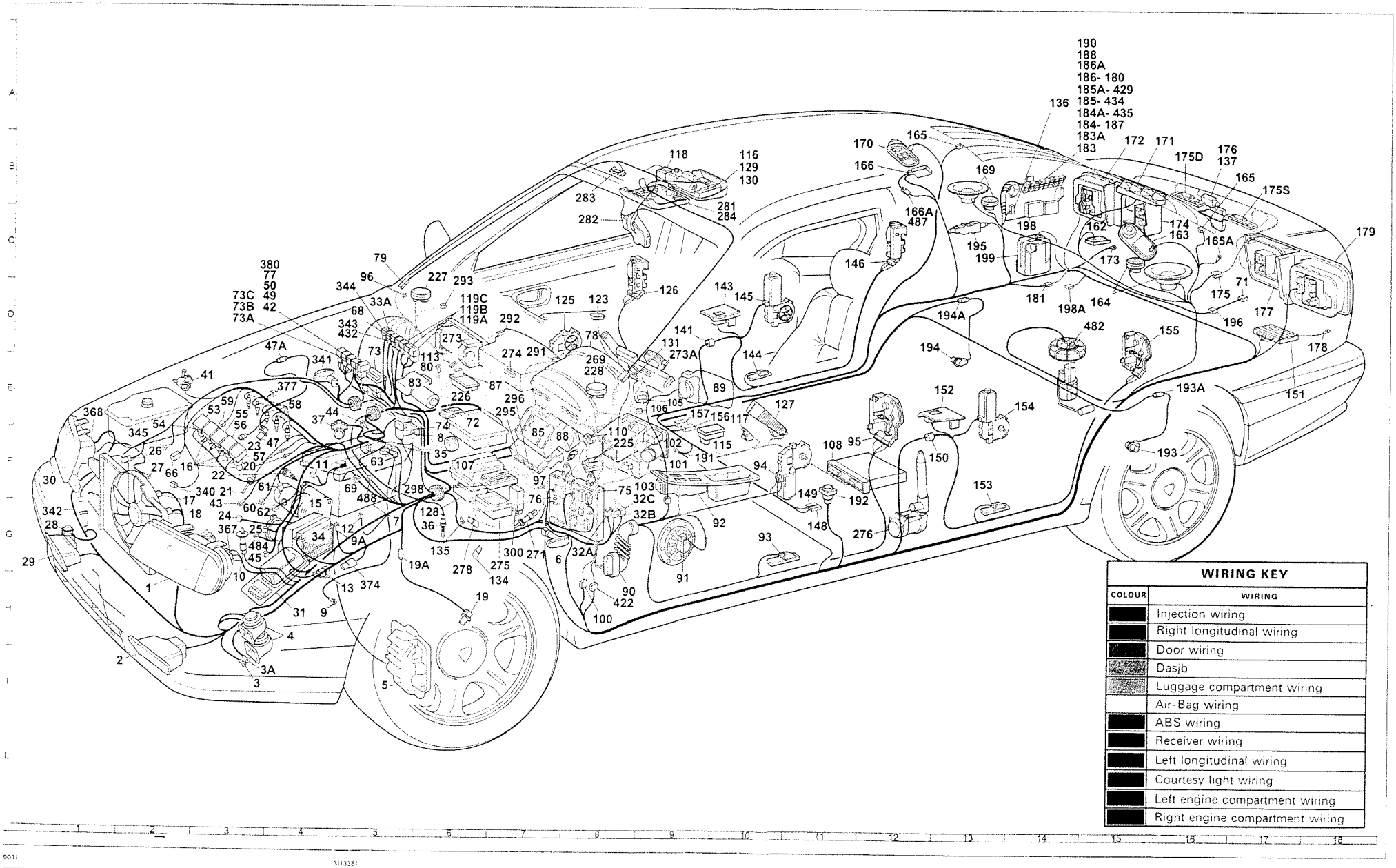

Electrical equipment

Diagrammatic views

55.

Diagrammatic view of location of cable looms and components (See key at end of wiring diagrams with the co-ordinates referring to the components)

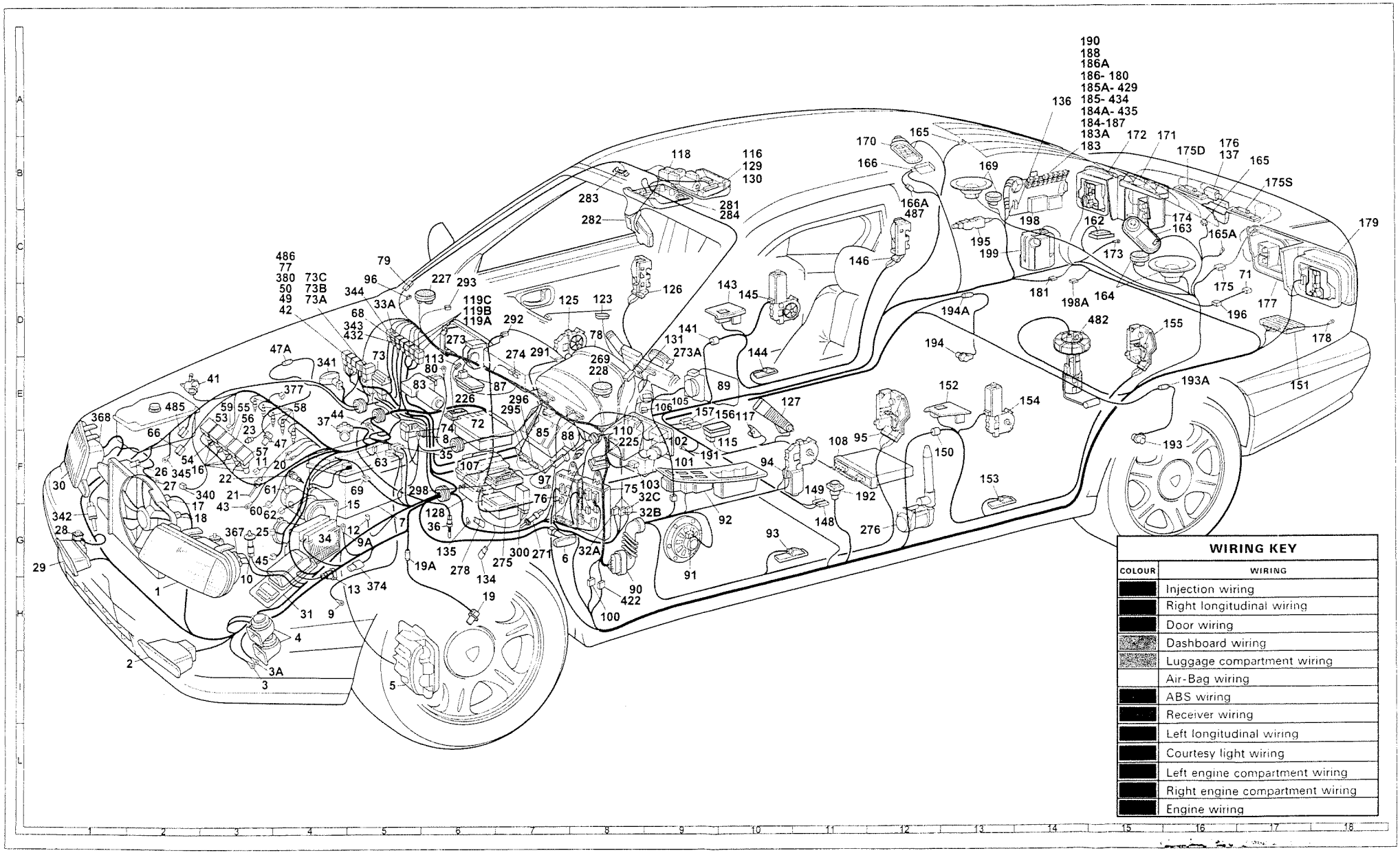

3U3391

3U9021

Copyright by Fiat Auto

55.

Version with automatic transmission

Diagrammatic view of location of cable looms and components (See key at end of wiring diagrams with the co-ordinates referring to the components)

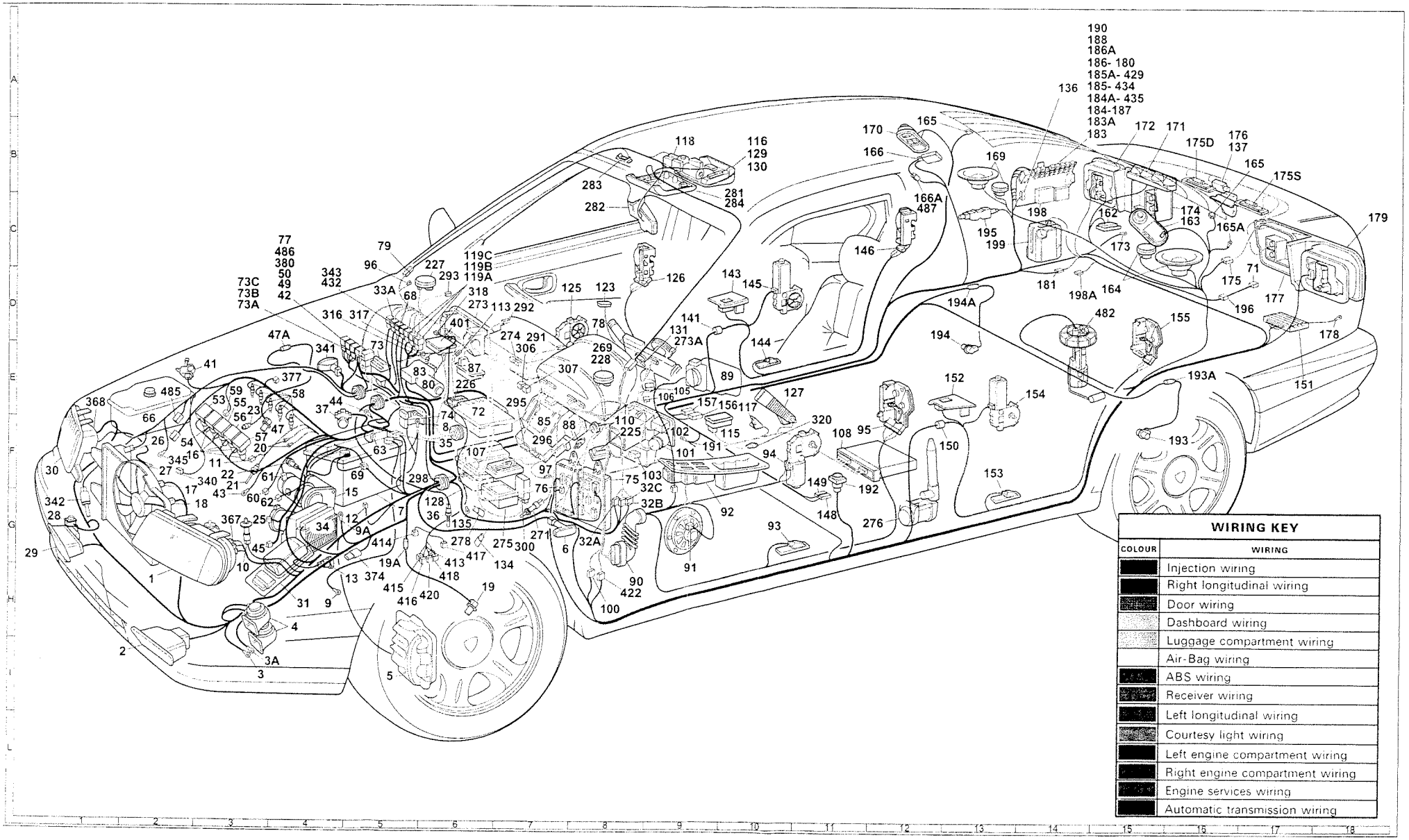

Electrical equipment

Diagrammatic views

55.

Diagrammatic view of location of cable looms and components (See key at end of wiring diagrams with the co-ordinates referring to the components)

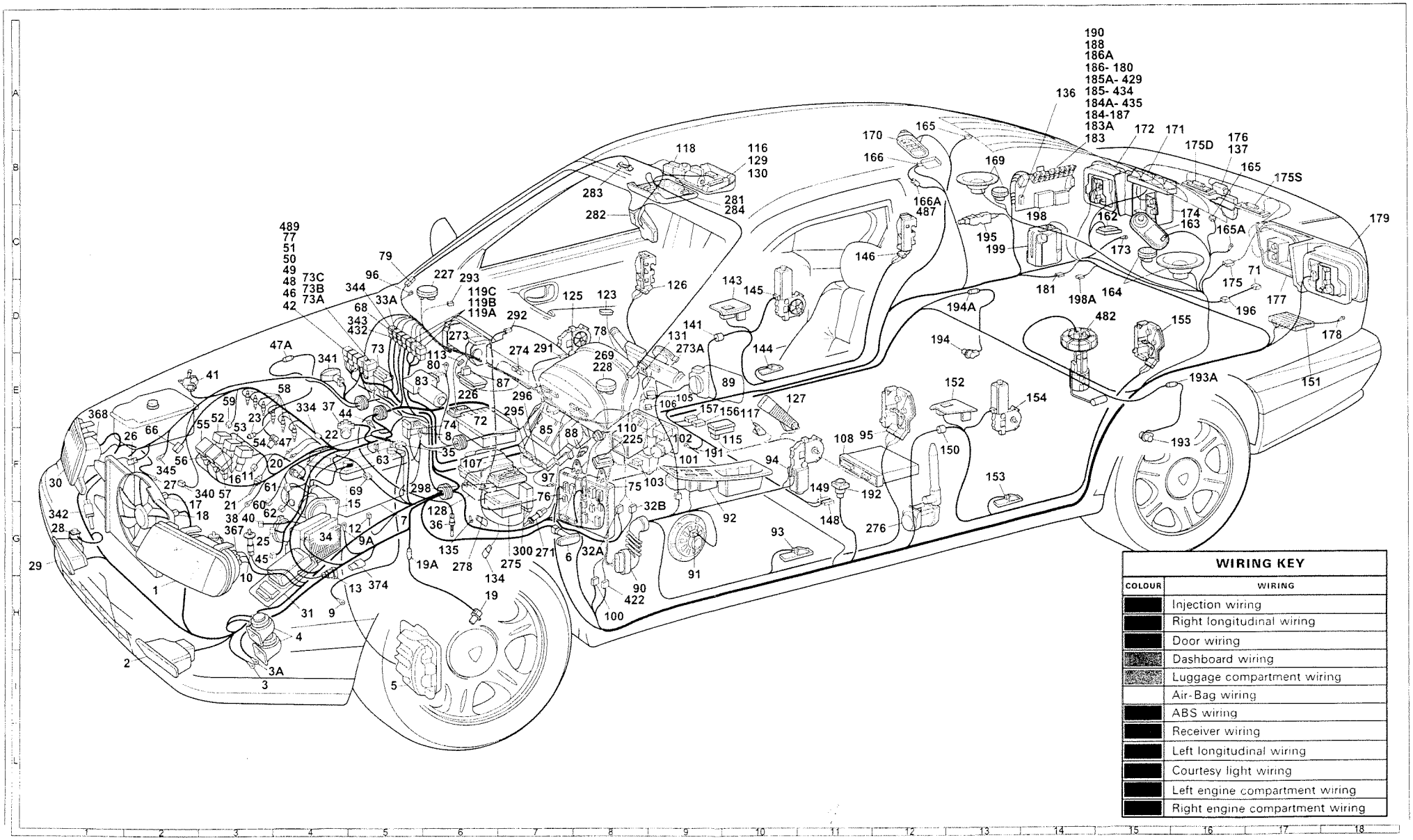

3U3411

3U9041

Copyright by Fiat Auto

55.

Version with automatic transmission

Diagrammatic view of location of cable looms and components (See key at end of wiring diagrams with the co-ordinates referring to the components)

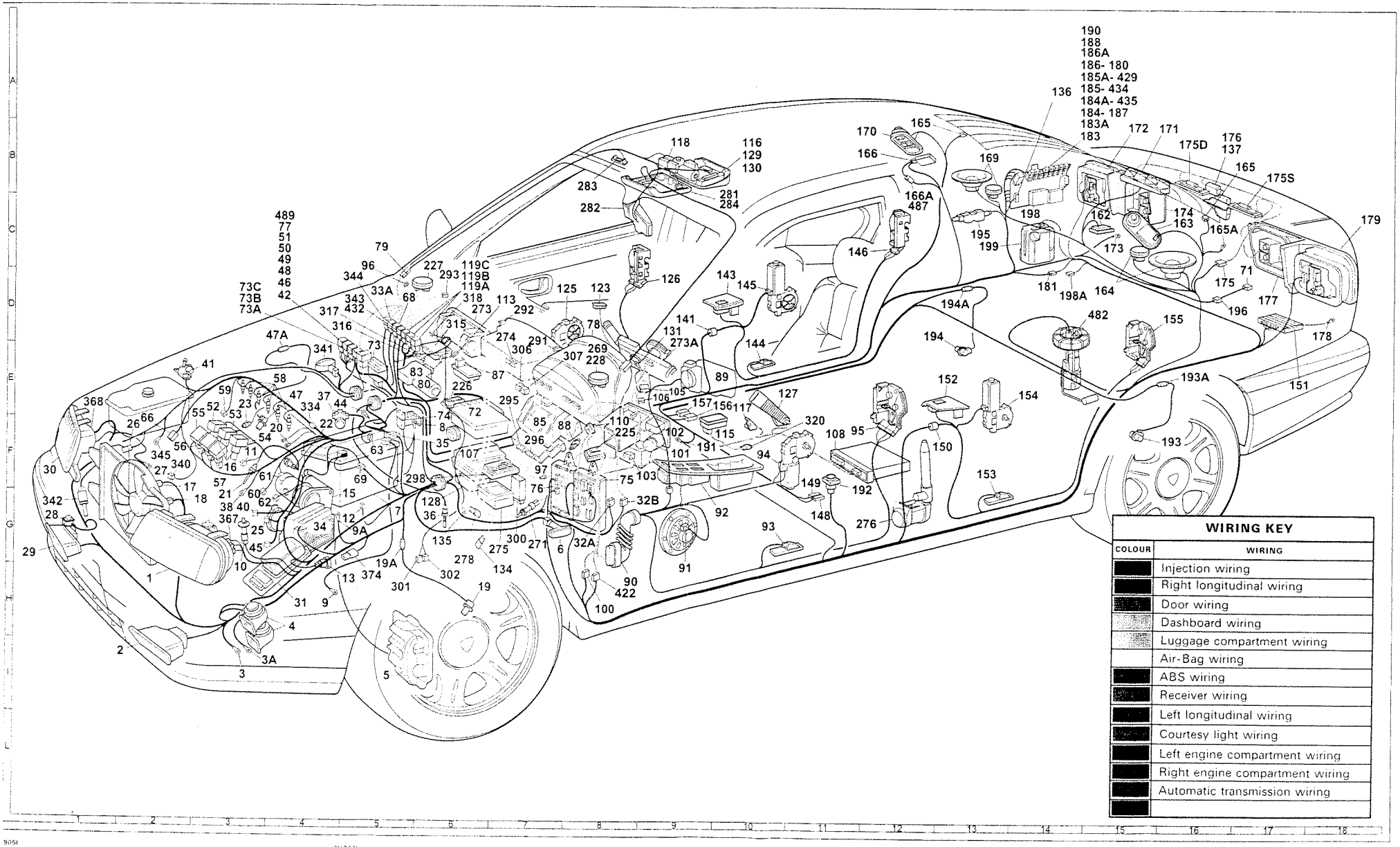

Electrical equipment
Diagrammatic views

55.

Diagrammatic view of location of cable looms and components (See key at end of wiring diagrams with the co-ordinates referring to the components)

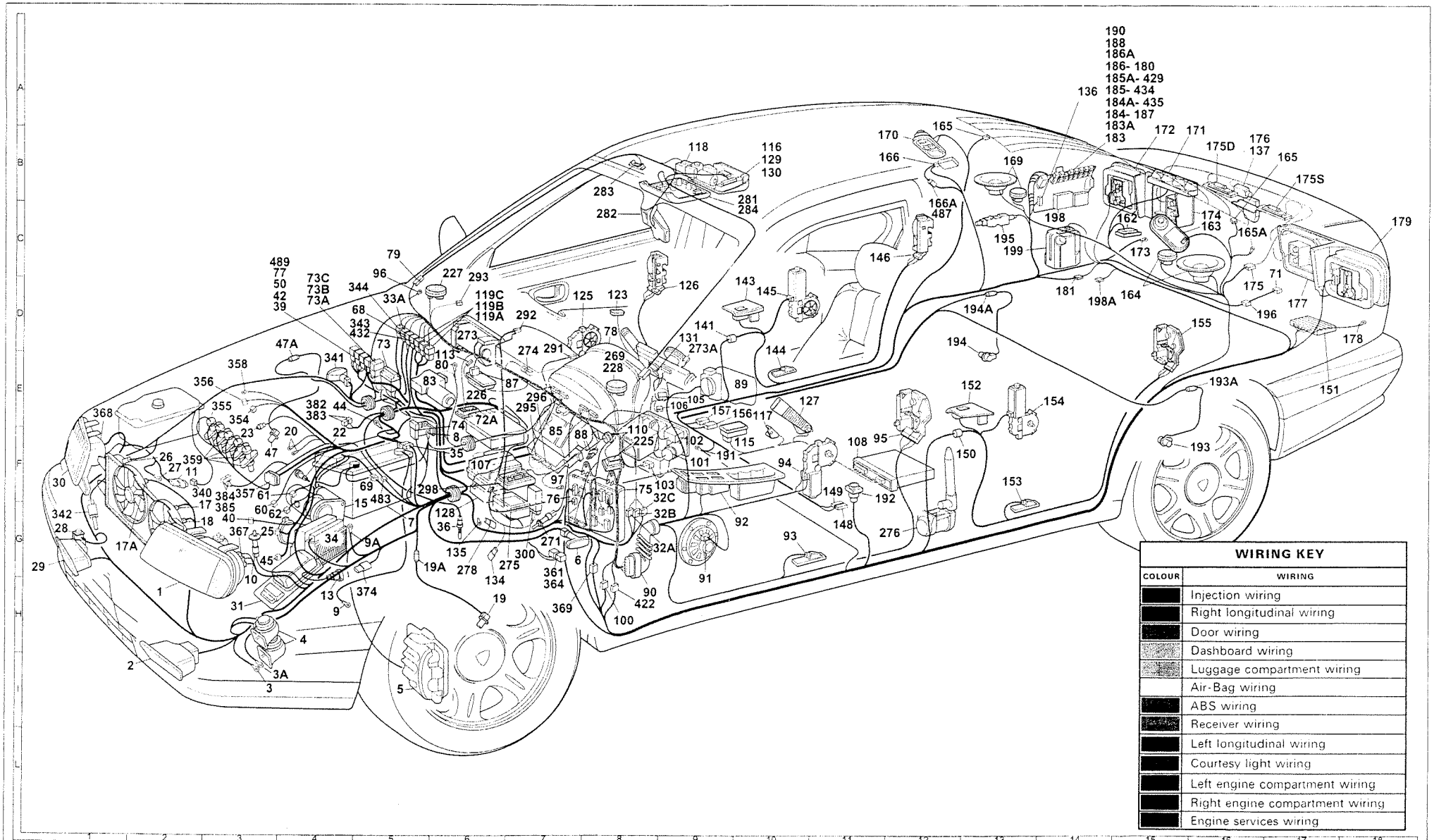

3U3431

3U9061

Copyright by Fiat Auto

55.

Diagrammatic view of location of cable looms and components (See key at end of wiring diagrams with the co-ordinates referring to the components)

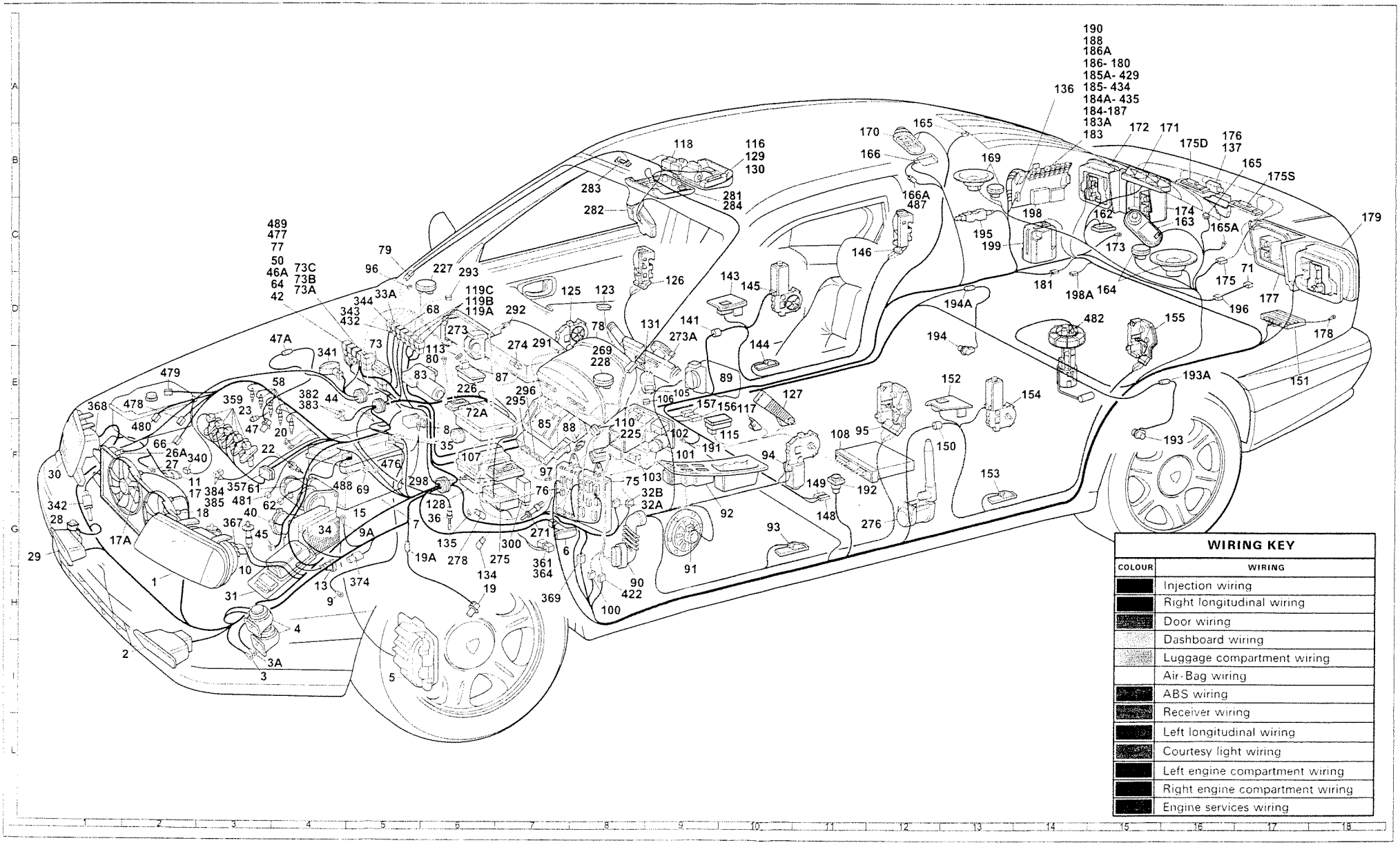

Diagrammatic view of dashboard with location of cable looms and components (See key at end of wiring diagrams with the co-ordinates referring to the components)

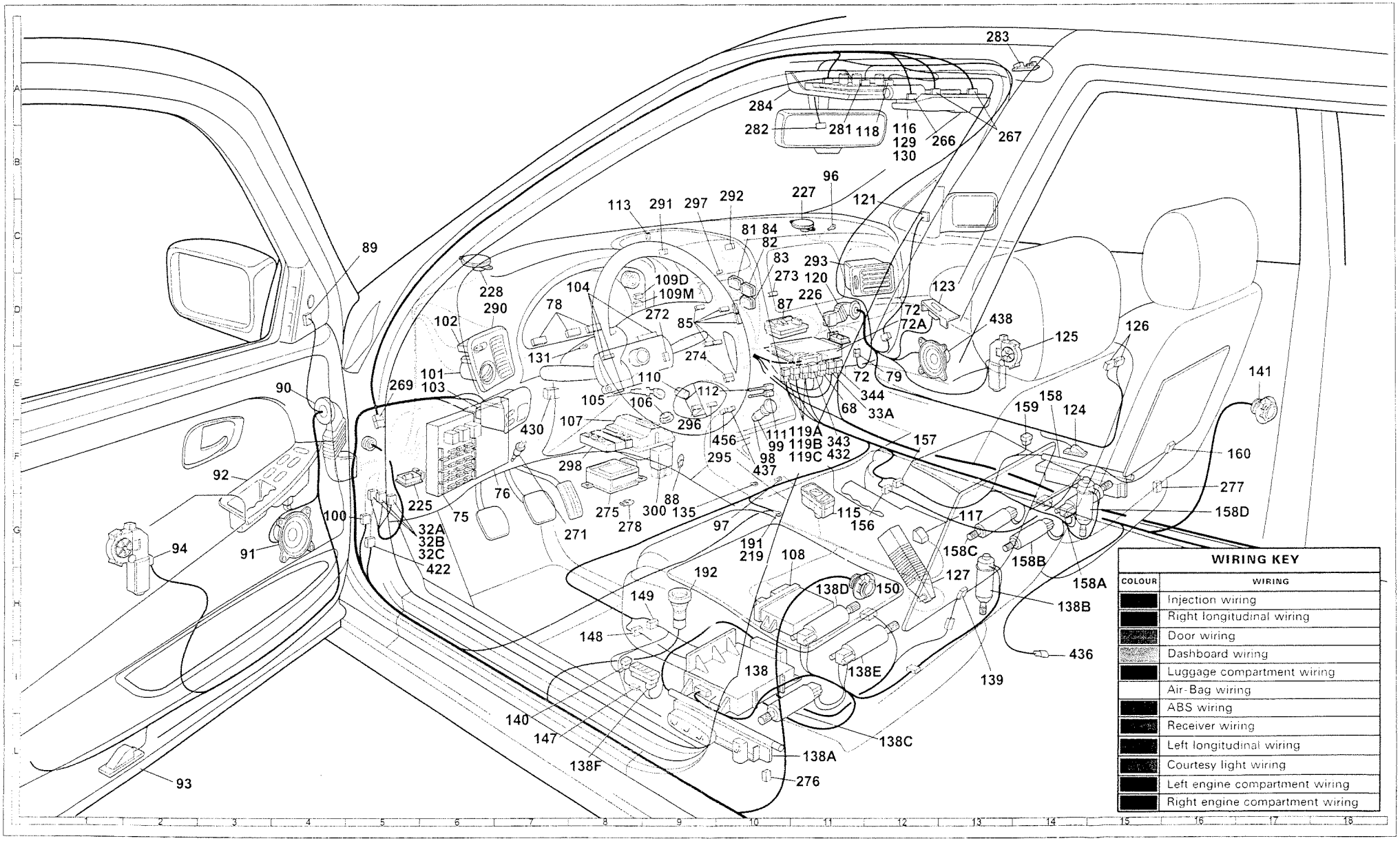

3U3451

3U9081

Copyright by Fiat Auto

5.

Components key

1 Left front light cluster (H2*)
2 Left fog lamp (I2*)
3 Left front earth (I3*)
3A Left front earth for anti-lock brakes (A.B.S.) (I3*)
4 Electric horns (H4*)
5 Left front brake pad wear sensor (I5*)
6 Left side direction indicator (G7*)
7 Battery (G5*)
8 Main connector block (F6*)
9 Earth on bodyshell (H4)
9A Earth on side panel for anti-lock brakes (A.B.S.) (G5*)
10 Button on bonnet lid for engaging anti-theft device (H3*)
11 Compressor coupling for air conditioning (F3*)
12 Insufficient brake fluid level sensor (G5*)
13 Reversing lights switch (H5*)
15 Starter motor (G5*)
16 Spark plugs (F3*)
17 1st engine cooling fan (F2*)
17A 2nd engine cooling fan (G2*)
18 Engine cooling fan speed resistance (G2*)
19 Sensor on left front wheel for anti-lock brakes (A.B.S.) (H6*)
19A Con. btwn anti-lock brakes (A.B.S.) cable & sensor on left wheel (G6*)
20 Alternator (F4*)
21 Minimum engine oil level sensor (G3*)
22 Engine coolant temperature sender unit (F4*)
23 Sensor signalling minimum engine oil pressure (F3*)
24 Barometric capsule (G3*)
25 Air temperature sensor (G3*)
26 Three stage pressure switch (F2*)
26A Four stage pressure switch (F2*)
27 Right front earth (F2*)
28 Electric headlamp washer pump (G1*)
29 Right fog lamp (G1*)
30 Right front light cluster (F1*)
31 Peripheral cntrl unit (engine comp.) (H4*)
E1 Dipped headlamps relay feed
E2 Horn relay feed
E3 Compressor coupling relay feed
E4 Main beam headlamps relay feed
E5 Fog lights relay
E6 Engine cooling fan high speed relay feed
E7 Engine cooling fan low speed relay feed
32A Connection between dashboard and left engine compartment cables (G9*) (G6**)
32B Connection between dashboard and left engine compartment cables (F9*) (G6**)
32C Connection between dashboard and left engine compartment cables (F9*) (G6**)
33A Connection between dashboard and right engine compartment cables (D5*) (E12**)
34 Anti-lock brakes electro-hydraulic control unit (A.B.S.) (G4*)
35 Connection between engine compartment and electronic injection cables (F6*)
36 Heated Lambda sensor (G6*)
37 Idle adjustment actuator (E4*)
38 Earth for electronic injection (G3*)
39 Relay for inertia switch (D3*)
40 E.G.R. solenoid valve (G3*)
41 Petrol vapour cut out solenoid valve (E3*)
42 30A fuse protecting electronic injection (D4*)
43 Electronic earth (G3*)
44 Power earth (E4*)
45 Air flow meter (G3*)
46 7.5A fuse protecting electronic injection (D4*)
46A 7.5A fuse protecting electronic injection (D4*)
47 Sensor on right front wheel for anti-lock brakes (A.B.S.) (D2*)
47A Connection between anti-lock brakes (A.B.S.) cable and sensor on right wheel (D4*)
48 10A fuse protecting heated Lambda sensor and air flow meter relay) (D4*)
48A 7.5A fuse protecting heated Lambda sensor (D4*)
49 Electric fuel pump and heated Lambda sensor relay feed (C4*)
50 Electronic injection system relay feed (C4*)
51 Air flow meter relay feed (C4*)
52 Ignition coil (E3*)
53 Ignition coil (E3*)
54 Ignition coil (F3*)
55 Ignition coil (E3*)
56 Ignition coil (F2*)
57 Ignition coil (F3*)
58 Injector
59 1st Det
60 2nd De
61 Engine
62 Rpm se
63 Potentic
64 40A fus
65 Power r
66 Timing
68 Connec
tronic ir
69 Engine
70 H.T. dis
71 Trailer p
72 Fuel inj
72A Fuel pu
(D11**
73 Second
73A 80A fus
73B 60A pro
junctior
73C 30A fu
alarm d
74 80A fus
(engine
75 Junctio
E1 Igni
E2 Inte
cators /
E3 Tim
76 I.G.E. c
77 10A fu
(A.B.S.
78 Instrum
A Trai
ligh
B Driv
B1 Pas
ligh
C Hea
D Fog
E Rea
F Side
F1 Inst
G Dip
H Mai
I Che
L Left
L1 Rig

* Co-ordinates of the components in the diagrammatic views from page 133 to 140 (see engine type concerned)

Co-ordinates of components in the diagrammatic view of the dashboard on page 141

3U9910

3U9911

Copiright by Fiat Auto

8 Injectors (E4*)
9 1st Detonation sensor (E3*)
0 2nd Detonation sensor (G3*)
1 Engine coolant temperature sensor (F3*)
2 Rpm sensor (G3*)
3 Potentiometer on butterfly valve (F5*)
4 40A fuse protecting heater plugs (D4*)
5 Power module (F3*)
6 Timing sensor (F2*)
8 Connection between dashboard and electronic injection cables (D5*) (E11**)
9 Engine services cable connection (F5*)
0 H.T. distributor (F3*)
1 Trailer preparation control unit (C17*)
2 Fuel injection control unit (E6*) (D11**)
A Fuel pump electronic control unit (E6*) (D11**)
3 Secondary connector block (D5*)
A 30A fuse protecting rear services (D4*)
B 60A protective fuse for I.G.E. control unit / junction unit (D4*)
C 30A fuse protecting ignition switch / alarm device (D4*)
4 80A fuse protecting peripheral control unit (engine compartment) (E6*)
5 Junction unit (dashboard) (F8*) (G6**)
E1 Ignition discharge relay
E2 Intermittent device for direction indicators / hazard warning lights
E3 Timer for headlamp washer
6 I.G.E. control unit (F7*) (F7**)
7 10A fuse protecting anti-lock brakes (A.B.S.) (C4*)
8 Instrument panel (D8*) (D7**)
A Trailer direction indicator warning light
B Driver's side heated seat warning light
1 Passenger's side heated seat warning light
C Heated rear windscreen warning light
D Fog lights warning light
E Rear fog lamps warning light
F Side lights warning light
F1 Instrument panel light bulbs
G Dipped headlamps warning light
H Main beam headlamps warning light
I Check summary warning light
L Left direction indicator warning light
L1 Right direction indicator warning light
J Seat belts not fastened warning light
K Battery recharging warning light
M Insufficient engine oil pressure warning light
N Handbrake warning light/I.G.E. control unit.
O Insufficient brake fluid level warning light
P Anti-lock braking system failure warning light (A.B.S.)
Q A.S.R. system failure warning light
R AIR-BAG system failure warning light
S Heater plugs warning light
T Voltmeter
U Electronic rev counter
V Fuel gauge
V1 Fuel reserve warning light
X Milometer/trip meter
X1 LANCIA-CODE failure warning light
Y Electronic tachometer
Y1 S.C.S. switch unit
W Water temperature gauge
W1 Engine coolant overheating warning light
Z Electronic automatic transmission gear selection display
Z1 Trip computer zeroing button
79 Connection between dashboard and courtesy light cables (C5*) (E12**)
80 Power earth in dashboard (E6*)
81 Climate control fan (Brushless) (C10**)
82 Air recirculation motor (C10**)
83 Windscreen wiper control unit (E6*) (C10**)
84 Single stage pressure switch (C10**)
85 Infocenter control unit (F7*) (D9**)
87 Light for glove compartment / controls for unlocking luggage compartment (E7*) (D10**)
88 Diagnostic socket (F7*) (G9**)
89 Left rear view mirror(E10*) (C5**)
A Motor for folding left rear view mirror
B Motor for vertical adjustment of left rear view mirror
C Motor for horizontal adjustment of left rear view mirror
D Left rear view mirror heating resistance
90 Connection between dashboard and left front door cables (H8*) (E4**)
91 Speaker in left front door (G3*)
92 Front/rear electric windows control panel on left front door (G10*) (F3**)
93 Light in left front door (G10*) (L2**)
94 Left front electric window motor (F10*) (G2**)
95 Left front central locking geared motor and signalling left front door open and anti-theft device on (F11*)
96 Earth on carrier (C5*) (C11**)
97 Earth on floor (F7*) (G10**)
98 Ashtray light (F10**)
99 Cigar lighter (F10**)
100 Connection between dashboard and left longitudinal cables (H8*) (G4**)
101 Light dimmer (F9*) (E6**)
102 Exterior lights control unit (F9*) (D6**)
B Switch for side lights / number plate lights
C Control switch for dipped beam headlamps / main beam headlamps
D Parking lights control switch
E Ideogram lights control switch
103 Switch control unit (F9*) (E6**)
A Fog lights switch
B Rear fog lamps control switch
C Headlamp alignment control unit
104 Steering column switch unit (D8**)
A Control switch for windscreen washer / headlamp washer
B Windscreen wiper control switch
C Horn control
D Switch for direction indicators / parking lights
E Main beam headlamps flasher button
F Main beam headlamps control switch
G Switch for rearscreen wash/wipe
105 Ignition switch (E9*) (E8**)
106 Aerial for LANCIA CODE (E9*) (E8**)
107 Alarm control unit (F6*) (E7**)
108 LANCIA-CODE control unit (F11*) (G11**)
109D Distribution / mixture motor (D9**)
109M Distribution / mixture motor (D9**)
110 Vehicle interior air temperature sensor (F8*) (E9**)
111 Mixed air sensor 1 (F10**)
112 Mixed air sensor 2 (E9**)
113 Solar temperature sensor (E6*) (C8**)
114 Sensor on steering
115 Controls for electrically adjustable rear view mirrors (F10*) (G11**)
116 Electrically operated sun roof electronic control unit (B10*) (B12**)
117 Switch signalling handbrake applied (E10*) (G13**)
118 Electrically operated sun roof motor (B9*) (B13**)
119A Connection between dashboard and right longitudinal cables (D6*) (F11**)
119B Connection between dashboard and right longitudinal cables (D6*) (F11**)
119C Connection between dashboard and right longitudinal cables (D6*) (F11**)
119D Connection between dahsboard and right longitudinal cables (D6*) (F11**)
119E Connection between dashboard and right longitudinal cables (D6*) (F**)
120 Connection between dashboard and right front door cables (D11**)
121 Right rear view mirror (B11**)
A Motor for folding right rear view mirror
B Motor for vertical adjustment of right rear view mirror
C Motor for horizontal adjustment of right rear view mirror
D Right rear view mirror heating resistance
123 Right front electric window control panel on right front door (D8*) (D13**)
124 Light in right front door (E14**)
125 Right front electric window motor (D7*) (D14**)
126 Right front central locking geared motor and signalling right front door open and alarm on (D9*) (D15**)
127 Switch signalling seat belts not fastened (E10*)
128 Timer for front courtesy light (G6*)
129 Electrically operated sun roof end of travel switch (B10*) (B12**)
130 Electrically operated sun roof control button (B10*) (B12**)
131 Earth on steering column support (D9*) (E7**)
134 Servotronic solenoid valve (F4*)
135 Earth on floor (signal for AIR-BAG) (G6*) (G9**)
136 Rear elec (A14*)
137 Tailgate lo
A Switch courtes
B Tailgate
138 Electronic cally adj (I10**)
138A Control p driver's se
138B Driver's se (H14**)
138C Driver's s (L12**)
138D Driver's s (H11**)
138E Driver's s (I11**)
138F Control driver's se
139 Driver's si
140 Switch fo (L7**)
141 Connectio and right
143 Right rea right rear
144 Light in ri
145 Right rear
146 Right rear motor and and alarm
147 Connectio (L7**)
148 Connectio and left se
149 Connectio and left se
150 Connectio and left re
151 Amplifier
152 Left rear e rear door
153 Light in le
154 Left rear e

136 Rear electric windows control unit (A14*)
137 Tailgate lock assembly (B16*)
A Switch for luggage compartment courtesy light and engaging alarm
B Tailgate locking/unlocking motor
138 Electronic control unit for driver's electrically adjustable seat with memory (I10**)
138A Control panel for electrically adjustable driver's seat (L11**)
138B Driver's seat backrest adjustment motor (H14**)
138C Driver's seat height adjustment motor (L12**)
138D Driver's seat height adjustment motor (H11**)
138E Driver's seat sliding adjustment motor (I11**)
138F Control panle for programming driver's seat (L8**)
139 Driver's side seat heated pad (I13**)
140 Switch for driver's side seat heated pad (L7**)
141 Connection between right longitudinal and right rear door cables (D9*) (E17**)
143 Right rear electric window control in right rear door (D10*)
144 Light in right rear door (D10*)
145 Right rear electric window motor (D10*)
146 Right rear door central locking geared motor and signalling right rear door open and alarm on (C11*)
147 Connection for left front seat cables (L7**)
148 Connection between left longitudinal and left seat cables (G11*) (H8**)
149 Connection between left longitudinal and left seat cables (F11*) (H8**)
150 Connection between left longitudinal and left rear door cables(F13*) (H12**)
151 Amplifier for radio (E17*)
152 Left rear electric window control on left rear door (E13*)
153 Light in left rear door (F13*)
154 Left rear electric window motor (E14*)
155 Left rear door central locking geared motor and signalling left rear door open and alarm on (D16*)
156 Connection between right longitudinal and right seat cables (E10*) (G11**)
157 Connection between right longitudinal and right seat cables (E9*) (F12**)
158 Control panel for electrically adjustable passenger seat (E14**)
158A Passenger seat sliding adjustment motor (H14**)
158B Passenger seat height adjustment motor (G14**)
158C Passenger seat height adjustment motor (G13**)
158D Passenger seat backrest adjustment motor (G16**)
159 Switch for passenger seat heater pad (E14**)
160 Passenger seat heater pad (F16**)
162 Luggage compartment courtesy light (C15*)
163 Left rear courtesy light (C16*)
164 Left rear speaker (D15*)
165 Heated rear windscreen (A12*)/(B17*)
165A Earth for heated rear windscreen (C16*)
166 Amplifier for aerial in rearscreen (B12*)
166A Rear cables connection in rearscreen (C12*)
169 Right rear speaker (B13*)
170 Right rear courtesy light (B12*)
171 Additional brake lights warning light (B16*)
172 Right rear light cluster on fixed section (B15*)
173 Right rear earth (C15*)
174 Right rear light cluster on moveable section (C16*)
175 Connection between left longitudinal and tailgate cables (D16*)
175S Left no. plate light (B17*)
175D Right no. plate light (B16*)
176 Geared motor for locking / unlocking luggage compartment tailgate (B16*)
177 Left rear light cluster on moveable section (D17*)
178 Left rear earth (D18*)
179 Left rear light cluster on fixed section (C18*)
180 Heated rear windscreen relay feed (A15*)
181 Connection between left longitudinal and right longitudinal cables (D14*)
183 Relay for driver's seat heater pad (B15*)
183A 7.5A fuse protecting driver's heated pad relay (A15*)
184 Relay for passenger seat heater pad (A15*)
184A 7.5A fuse protecting passenger heated pad relay (A15*)
185 Relay for electrically adjustable driver's seat (A15*)
185A 30A fuse protecting electrically adjustable passenger seat (A15*)
186 Relay for electrically adjustable passenger seat (A15*)
186A 30A fuse protecting electrically adjustable driver's seat (A15*)
187 25A fuse protecting electric rear windows control unit (A15*)
188 25A fuse protecting boot release electro-magnet (A15*)
189 30A fuse protecting heated rear windscreen
190 Relay for locking / unlocking luggage compartment tailgate (A15*)
191 Earth for inertia switch (F9*) (G10**)
192 Inertia switch (F11*) (H9**)
193 Sensor on left rear wheel for anti-lock brakes (A.B.S.) (F16*)
193A Connection between anti-lock brakes cable (A.B.S.) and sensor on left rear wheel (E16*)
194 Sensor on right rear wheel for anti-lock brakes (A.B.S.) (D12*)
194A Connection between anti-lock brakes cable (A.B.S.) and sensor on right rear wheel (D13*)
195 Fuel filler flap release motor (C13*)
196 Preparation for trailer (D17*)
198 Servotronic device electronic control unit (C14*)
198A Diagnostic socket (D14*)
199 Alarm siren (C13*)
200 Controlled damping suspension electronic control unit (S.C.S.)
219 Earth on centre tunnel (G10**)
220A 7.5A fuse protecting S.C.S. system
221 Motor for left rear controlled damping suspension (S.C.S.)
222 Motor for right rear controlled damping suspension (S.C.S.)
225 Left floor light (F8*) (G5**)
226 Right floor light (E6*) (D11**)
227 Right front speaker (C6*) (B11**)
228 Left front speaker (E8*) (D6**)
266 Infra red receiver for alarm device (B13**)
267 Volumetric sensors for alarm device (B13**)
269 Connection between dashboard and receiver cables (E8*) (E5**)
271 Brake lights switch (G7*) (G8**)
272 Driver's AIR-BAG connector (D9**)
273 Passenger AIR-BAG connector (D6*) (D10**)
273A Connector for clock spring (D9*)
274 Connection between dashboard and AIR-BAG cables (D7*) (E9**)
275 AIR-BAG control unit (G7*) (G8**)
276 Left seat belt pretensioner (G12*) (L11**)
277 Right seat belt pretensioner (F16**)
278 Diagnostic socket for AIR-BAG (G6*) (G8**)
281 Front courtesy light (B10*) (B11*)
282 Electro-chromic interior rear view mirror (C8*) (B10**)
283 Passenger sun visor with light (B8*) (A13**)
284 Preparation for electrically operated sun roof (C10*) (A10**)
290 Left front air vent controls light (D6**)
291 Left centre air vent controls light (D7*) (C9**)
292 Right centre air vent controls light (D7*) (B10**)
293 Right front air vent controls light (C6*) (C11**)
295 Radio cables connection (E7*) (F9**)
296 Radio cables connection (E7*) (F9**)
297 Alarm device warning light (C9**)
298 Electric front windows control unit (G6*) (F7**)
300 Central locking electronic control unit (G7*) (G9**)
301 Solenoid valves (only for 2959 H5*)
302 Switch control unit (only for 2959 H6*)
306 Electronic automatic transmission horn (E7*)

307 Switch for electronic automatic transmission horn
315 Electronic automatic transmission gear selector control unit (ZF) (D6*)
316 Diagnostic socket for electronic automatic transmission (D4*)
317 Connection between electronic automatic transmission and electronic injection cables 2959 (E7*) 2.0/2.4 (D5*)
318 Connection between electronic automatic transmission and dashboard cables (D6*)
319 Preparation for Kick-Down
320 Trim on automatic transmission gear selector lever (F11*)
321 Motor for left front controlled damping suspension (S.C.S.)
322 Motor for right front controlled damping suspension (S.C.S.)
323 Accelerometer for controlled damping suspension (S.C.S.)
334 Connection between electronic injection cable and injector bridge (E4*)
340 Right front brake pad wear sensor (D3*)
341 Right side direction indicator (E4*)
342 Electric windscreen washer pump (G1*)
343 40A starter relay (D5*) (F11**)
344 Connection between dashboard and anti-lock brakes cables (A.B.S.) (D5*) (E12**)
345 Right front earth (F2*)
354 Electric diesel pump (E3*)
355 Instrument injector (E3*)
356 Solenoid valve on diesel pump (E3*)
357 Heater plugs control unit (F3*)
358 Engine cut out solenoid on injection pump (E3*)
359 Heater plugs (E3*)
361 Switch on clutch pedal (G7*)
364 Potentiometer on accelerator pedal (H7*)
367 Left headlamp alignment (G3*)
368 Right headlamp alignment (E1*)
369 Connection between electronic injection and left longitudinal cables (H7*)
374 Diagnostic socket (H5*)
377 Phase transformer (E4*)
380 Relay for phase transformer (C4*)
382 Heated diesel filter relay feed (P.T.C.) (E4*)
383 15A fuse protecting heated diesel filter (P.T.C.) (E4*)
384 Heated diesel filter thermal contact (P.T.C.) (F3*)
385 Heated diesel filter resistance (P.T.C.) (G3*)

401 Electronic automatic transmission gear selector control unit (AISIN) (D6*)
413 Connection to the solenoid valves (G6*)
414 Butterfly valve position potentiometer (G5*)
415 Gear position selector (H5*)
416 Gear position selector (H5*)
417 Engine rpm sensor (G6*)
418 Vehicle speed sensor (H6*)
420 Gearbox oil temperature sensor (H6*)
422 Connection between dashboard and left longitudinal cables (H8*) (H6**)
423 Rearscreen wiper relay feed
424 Rearscreen wiper control switch
425 Right luggage compartment light
426 Speaker in tailgate (woofer)
427 Electric pump for rearscreen washer
428 Connection between longitudinal/left tailgate cables for Speaker
429 7.5A fuse protecting heated rear view mirrors (A15*)
430 Handbrake applied/insufficient brake fluid level connector diode (F7**)
431 Direction indicators operation with doors locked
432 20A protective fuse for ignition switch relay feed (D5*) (F11**)
433 Rearscreen wash/wipe motor
434 15A fuse protecting current socket (A15*)
435 Current socket relay feed (A15*)
436 Current socket (I14**)
437 Preparation for radio phone (F10**)
438 Dual function speaker for radio and hands-free radio phone in front door (D13**)
439 Electrically adjustable driver's seat control unit
440 Diagnostic socket for electrically adjustable driver's seat
441 Sensor detecting driver's seat in retracted position
442 Sensor detecting driver's seat in forwards position
443 Connection between right longitudinal and driver's easy-enter electrically adjustable seat cables
444 Connection between right longitudinal and passenger easy-enter electrically adjustable seat cables
445 Electrically operated passenger seat control unit
446 Diagnostic socket for electrically adjustable driver's seat

447 Sensor detecting passenger seat in retracted position
448 Sensor detecting passenger seat in forwards position
449 Left electric window control panel on left door
450 Micro-switch for electric windows in left window
451 Right electric window control panel on left door
452 Micro-switch for electric windows in right window
453 Connection between driver's seat position sensors
454 Connection between passenger seat position sensors
455 Dual function aerial for radio and radio phone
456 Connector for radio phone aerial (F10**)
476 80A fuse protecting heater plugs control unit (F5*)
477 Electric fuel pump relay (C4*)
478 Fuel pressure regulator (F2*)
479 Fuel temperature sensor (E2*)
480 Turbo pressure regulator (F2*)
481 Fuel pressure sensor (G3*)
482 Electric fuel pump/fuel gauge (D15*)
483 50A fuse protecting heater plugs control unit (F5*)
484 Over-boost solenoid valve (G3*)
485 Modular manifold solenoid valve (E2*)
486 Relay for modular manifold solenoid valve (C4*)
487 Connector for aerial supply (C12*)
488 150A maxi fuse (F4*)
489 60A protective fuse for anti-lock brakes (A.B.S.) (C4*)

Cable colour code

A	Light blue
B	White
C	Orange
G	Yellow
H	Grey
L	Blue
M	Brown
N	Black
R	Red
S	Pink
V	Green
Z	Violet
AB	Light blue-White
AG	Light blue-Yellow
AN	Light blue-Black
AR	Light blue-Red
AV	Light blue-Violet
BG	White-Yellow
BL	White-Blue
BN	White-Black
BR	White-Red
BV	White-Green
BZ	White-Violet
CA	Orange-Light blue
CB	Orange-White
CN	Orange-Black
GN	Yellow-Black
GL	Yellow-Blue
GR	Yellow-Red
GV	Yellow-Green
HG	Grey-Yellow
HN	Grey-Black
HR	Grey-Red
HV	Grey-Green
LB	Blue-White
LG	Blue-Yellow
LN	Blue-Black
LR	Blue-Red
LV	Blue-Green
MB	Brown-White
MN	Brown-Black
NZ	Black-Violet
RB	Red-White
RG	Red-Yellow
RN	Red-Black
RV	Red-Green
SN	Pink-Black
VB	Green-White
VN	Green-Black
VR	Green-Red
ZB	Violet-White

307 Switch for electronic automatic transmission horn
315 Electronic automatic transmission gear selector control unit (ZF) (D6*)
316 Diagnostic socket for electronic automatic transmission (D4*)
317 Connection between electronic automatic transmission and electronic injection cables 2959 (E7*) 2.0/2.4 (D5*)
318 Connection between electronic automatic transmission and dashboard cables (D6*)
319 Preparation for Kick-Down
320 Trim on automatic transmission gear selector lever (F11*)
321 Motor for left front controlled damping suspension (S.C.S.)
322 Motor for right front controlled damping suspension (S.C.S.)
323 Accelerometer for controlled damping suspension (S.C.S.)
334 Connection between electronic injection cable and injector bridge (E4*)
340 Right front brake pad wear sensor (D3*)
341 Right side direction indicator (E4*)
342 Electric windscreen washer pump (G1*)
343 40A starter relay (D5*) (F11**)
344 Connection between dashboard and anti-lock brakes cables (A.B.S.) (D5*) (E12**)
345 Right front earth (F2*)
354 Electric diesel pump (E3*)
355 Instrument injector (E3*)
356 Solenoid valve on diesel pump (E3*)
357 Heater plugs control unit (F3*)
358 Engine cut out solenoid on injection pump (E3*)
359 Heater plugs (E3*)
361 Switch on clutch pedal (G7*)
364 Potentiometer on accelerator pedal (H7*)
367 Left headlamp alignment (G3*)
368 Right headlamp alignment (E1*)
369 Connection between electronic injection and left longitudinal cables (H7*)
374 Diagnostic socket (H5*)
377 Phase transformer (E4*)
380 Relay for phase transformer (C4*)
382 Heated diesel filter relay feed (P.T.C.) (E4*)
383 15A fuse protecting heated diesel filter (P.T.C.) (E4*)
384 Heated diesel filter thermal contact (P.T.C.) (F3*)
385 Heated diesel filter resistance (P.T.C.) (G3*)

401 Electronic automatic transmission gear selector control unit (AISIN) (D6*)
413 Connection to the solenoid valves (G6*)
414 Butterfly valve position potentiometer (G5*)
415 Gear position selector (H5*)
416 Gear position selector (H5*)
417 Engine rpm sensor (G6*)
418 Vehicle speed sensor (H6*)
420 Gearbox oil temperature sensor (H6*)
422 Connection between dashboard and left longitudinal cables (H8*) (H6**)
423 Rearscreen wiper relay feed
424 Rearscreen wiper control switch
425 Right luggage compartment light
426 Speaker in tailgate (woofer)
427 Electric pump for rearscreen washer
428 Connection between longitudinal/left tailgate cables for Speaker
429 7.5A fuse protecting heated rear view mirrors (A15*)
430 Handbrake applied/insufficient brake fluid level connector diode (F7**)
431 Direction indicators operation with doors locked
432 20A protective fuse for ignition switch relay feed (D5*) (F11**)
433 Rearscreen wash/wipe motor
434 15A fuse protecting current socket (A15*)
435 Current socket relay feed (A15*)
436 Current socket (I14**)
437 Preparation for radio phone (F10**)
438 Dual function speaker for radio and hands-free radio phone in front door (D13**)
439 Electrically adjustable driver's seat control unit
440 Diagnostic socket for electrically adjustable driver's seat
441 Sensor detecting driver's seat in retracted position
442 Sensor detecting driver's seat in forwards position
443 Connection between right longitudinal and driver's easy-enter electrically adjustable seat cables
444 Connection between right longitudinal and passenger easy-enter electrically adjustable seat cables
445 Electrically operated passenger seat control unit
446 Diagnostic socket for electrically adjustable driver's seat

447 Sensor detecting passenger seat in retracted position
448 Sensor detecting passenger seat in forwards position
449 Left electric window control panel on left door
450 Micro-switch for electric windows in left window
451 Right electric window control panel on left door
452 Micro-switch for electric windows in right window
453 Connection between driver's seat position sensors
454 Connection between passenger seat position sensors
455 Dual function aerial for radio and radio phone
456 Connector for radio phone aerial (F10**)
476 80A fuse protecting heater plugs control unit (F5*)
477 Electric fuel pump relay (C4*)
478 Fuel pressure regulator (F2*)
479 Fuel temperature sensor (E2*)
480 Turbo pressure regulator (F2*)
481 Fuel pressure sensor (G3*)
482 Electric fuel pump/fuel gauge (D15*)
483 50A fuse protecting heater plugs control unit (F5*)
484 Over-boost solenoid valve (G3*)
485 Modular manifold solenoid valve (E2*)
486 Relay for modular manifold solenoid valve (C4*)
487 Connector for aerial supply (C12*)
488 150A maxi fuse (F4*)
489 60A protective fuse for anti-lock brakes (A.B.S.) (C4*)

Cable colour code

A	Light blue
B	White
C	Orange
G	Yellow
H	Grey
L	Blue
M	Brown
N	Black
R	Red
S	Pink
V	Green
Z	Violet
AB	Light blue-White
AG	Light blue-Yellow
AN	Light blue-Black
AR	Light blue-Red
AV	Light blue-Violet
BG	White-Yellow
BL	White-Blue
BN	White-Black
BR	White-Red
BV	White-Green
BZ	White-Violet
CA	Orange-Light blue
CB	Orange-White
CN	Orange-Black
GN	Yellow-Black
GL	Yellow-Blue
GR	Yellow-Red
GV	Yellow-Green
HG	Grey-Yellow
HN	Grey-Black
HR	Grey-Red
HV	Grey-Green
LB	Blue-White
LG	Blue-Yellow
LN	Blue-Black
LR	Blue-Red
LV	Blue-Green
MB	Brown-White
MN	Brown-Black
NZ	Black-Violet
RB	Red-White
RG	Red-Yellow
RN	Red-Black
RV	Red-Green
SN	Pink-Black
VB	Green-White
VN	Green-Black
VR	Green-Red
ZB	Violet-White

INDEX FOR CONNECTOR BLOCKS

page

- **INTRODUCTION** 146
- Interpreting codes at connector blocks 146
- Cable colour code 146
- Connector blocks 147

Copyright by Fiat Auto

INTRODUCTION

Interpreting codes at the connector blocks

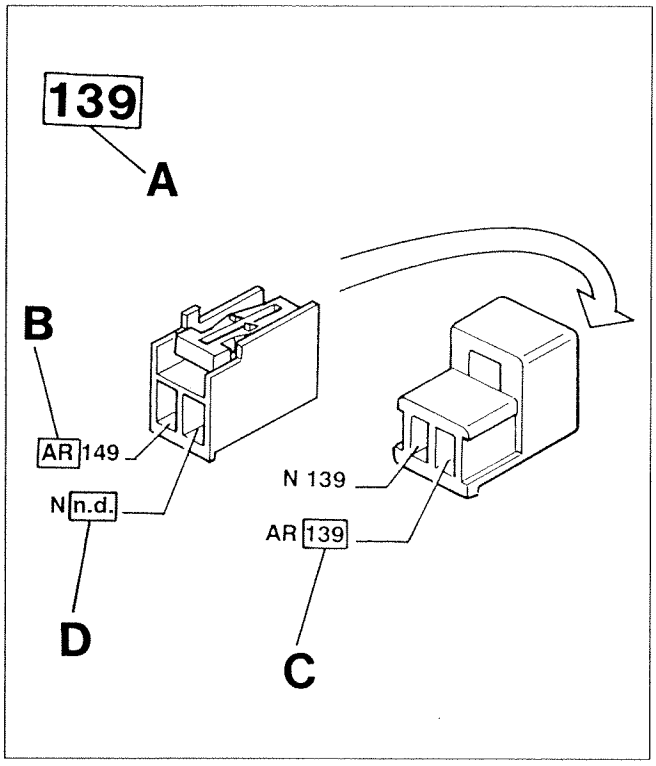

P3U146I01

A Identification N° of the connector block referred to in the wiring diagrams

B Cable colour identification code (see table at the foot of the page)

C Identification N° of the destination of the cable marked with the code

D The n.d. (nodo di derivazione - connector block) code identifies ultrasound welding taped in the cable loom

Cable colour code

A	Light blue	**BG**	White-Yellow	**LB**	Blue-White
B	White	**BL**	White-Blue	**LG**	Blue-Yellow
C	Orange	**BN**	White-Black	**LN**	Blue-Black
G	Yellow	**BR**	White-Red	**LR**	Blue-Red
H	Grey	**BV**	White-Green	**LV**	Blue-Green
L	Blue	**BZ**	White-Violet	**MB**	Brown-White
M	Brown	**CA**	Orange-Light blue	**MN**	Brown-Black
N	Black	**CB**	Orange-White	**NZ**	Black-Violet
R	Red	**CN**	Orange-Black	**RB**	Red-White
S	Pink	**GN**	Yellow-Black	**RG**	Red-Yellow
V	Green	**GL**	Yellow-Blue	**RN**	Red-Black
Z	Violet	**GR**	Yellow-Red	**RV**	Red-Green
AB	Light blue-White	**GV**	Yellow-Green	**SN**	Pink-Black
AG	Light blue-Yellow	**HG**	Grey-Yellow	**VB**	Green-White
AN	Light blue-Black	**HN**	Grey-Black	**VN**	Green-Black
AR	Light blue-Red	**HR**	Grey-Red	**VR**	Green-Red
AV	Light blue-Green	**HV**	Grey-Green	**ZB**	Violet-White

3U262I

1 Left front light cluster

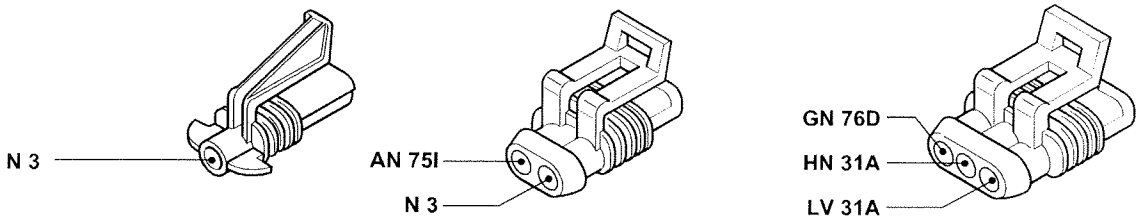

2 Left fog lamp

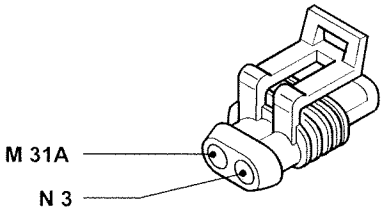

3 Left front earth

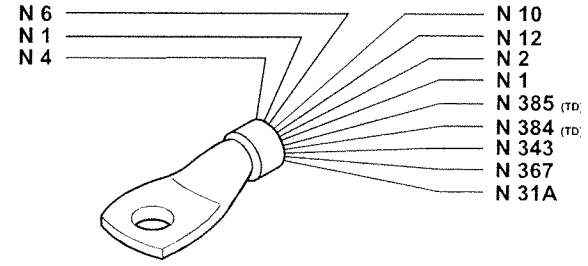

3A Left front earth for anti-lock brakes (A.B.S.)

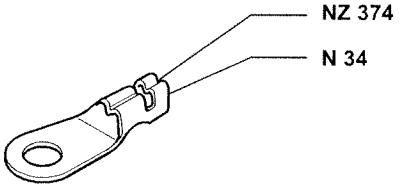

5 Left front brake pad wear sensor

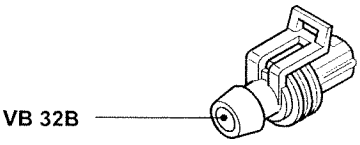

4 Electric horns

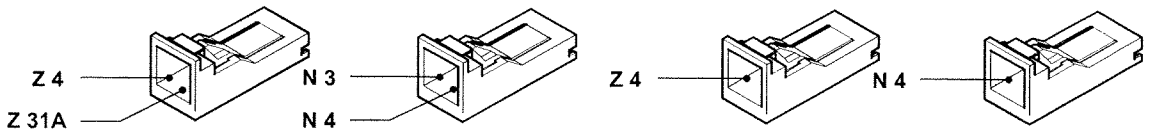

P3U263I01

Copyright by Fiat Auto

55.

6 Left side direction indicator

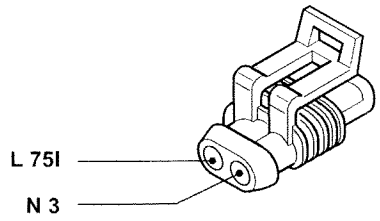

7 Battery

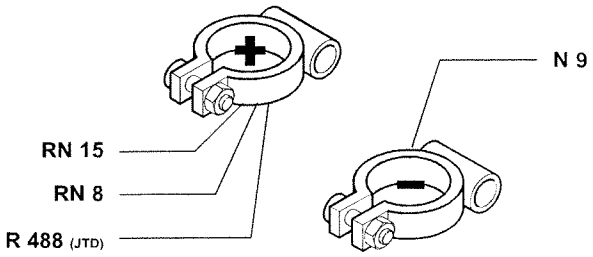

8 Main connector block

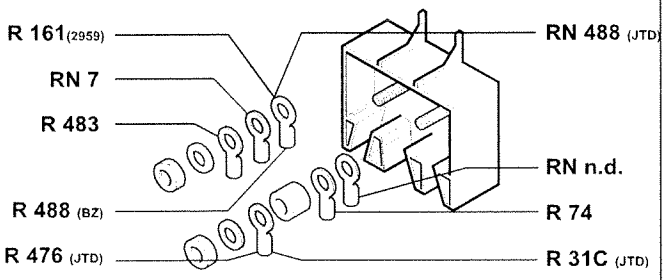

9 Earth on bodyshell

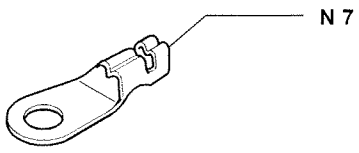

9A Earth on side panel for anti-lock brakes (A.B.S.)

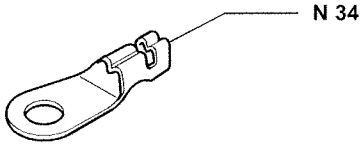

10 Button on bonnet lid for engaging alarm device

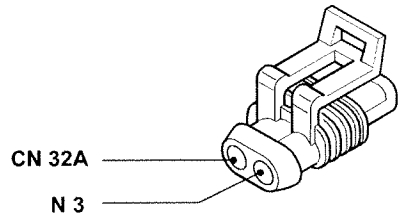

11 Compressor coupling for air conditioning

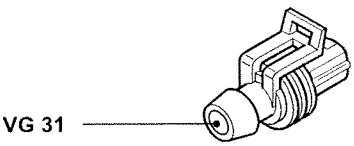

11 Compressor coupling for air conditioning (Only for 1995 16v T and 1998 20v T)

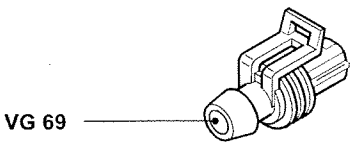

3U264I

P3U264I01

12 Insufficient brake fluid level sensor

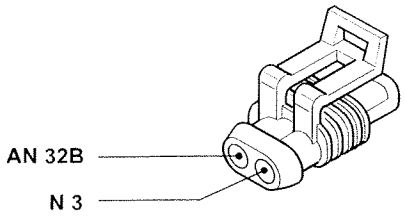

13 Reversing lights switch

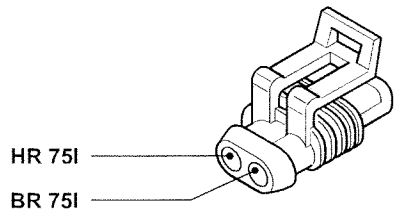

15 Starter motor

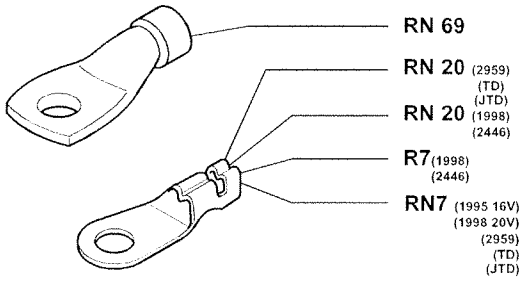

17 1st engine cooling fan

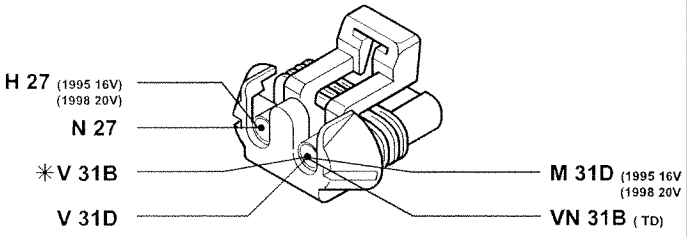

* Variant connection without air conditioning

17A 2nd engine cooling fan (Only for Turbo Diesel versions)

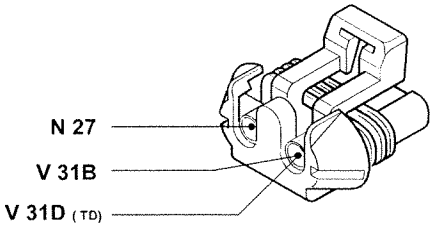

18 ngine cooling fan speed resistance

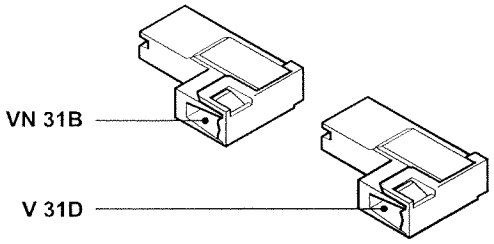

19(*) Sensor on left front wheel (A.B.S.)
19A Connection for A.B.S. sensor cable on left front wheel

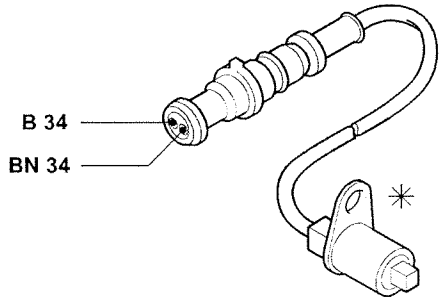

20 Alternator (Only for 1998 - 2446)

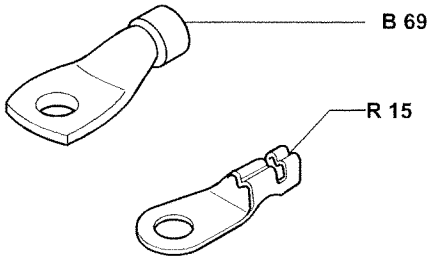

3U265I

P3U265I01

Copyright by Fiat Auto

55.

20 Alternator
(Only for 2959 V6 and Turbo diesel)

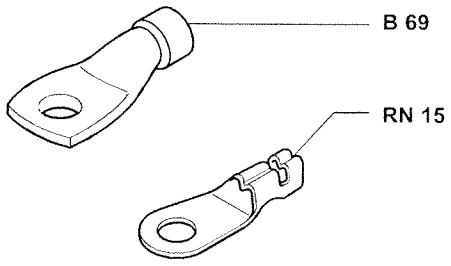

20 Alternator
(Only for Turbo petrol versions)

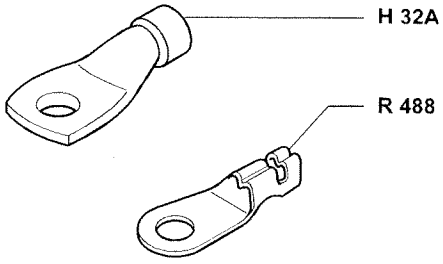

21 Minimum engine oil level sensor
(Only for petrol versions)

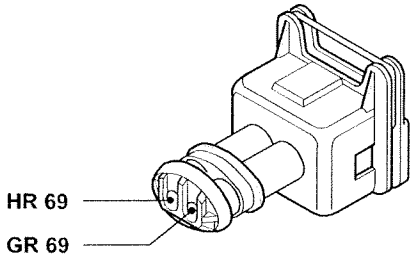

22 Engine coolant temperature sender unit

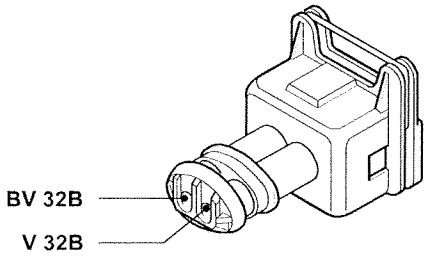

23 Sensor signalling minimum engine oil pressure

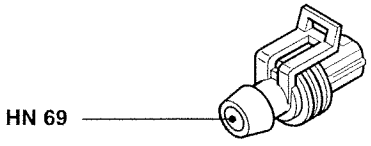

23 Sensor signalling minimum engine oil pressure
(Only for Turbo petrol versions)

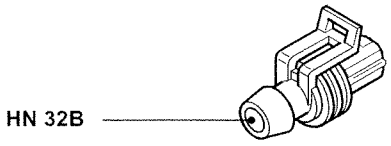

24 Barometric capsule (Only for 1998 20v T)

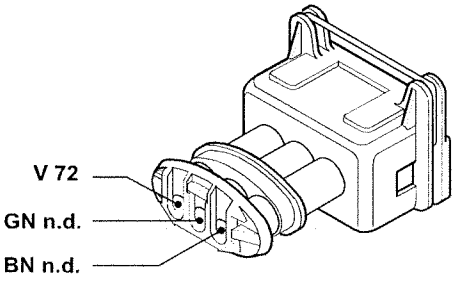

24 Barometric capsule (Only for 1995 16v T)

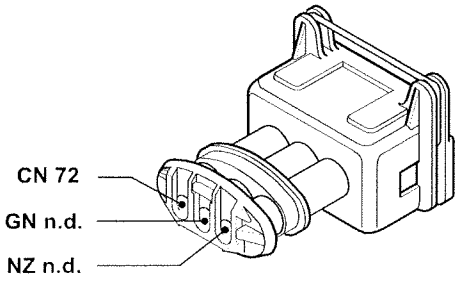

3U266I

P3U266I01

25 Air temperature sensor

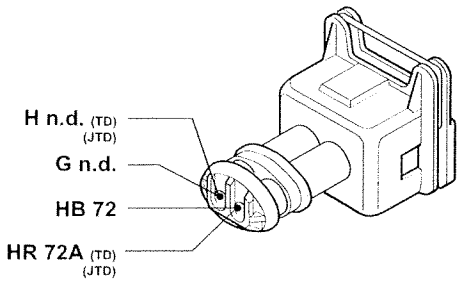

26 Three stage pressure switch

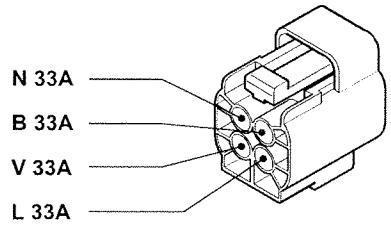

26A Four stage pressure switch (Only for 2387 JTD)

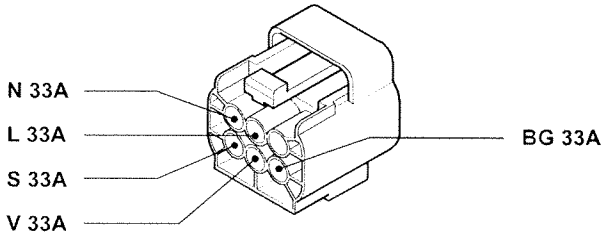

27 Right front earth (Only for Turbo Diesel versions)

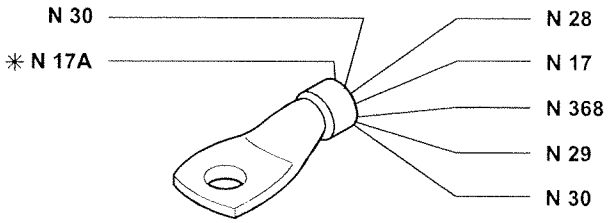

28 Electric headlamp washer pump

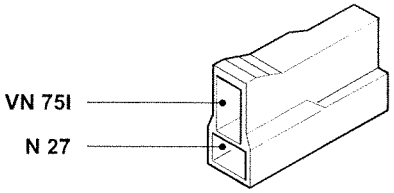

29 Right fog lamp

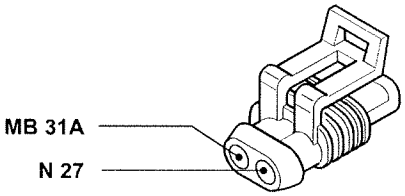

30 Right front light cluster

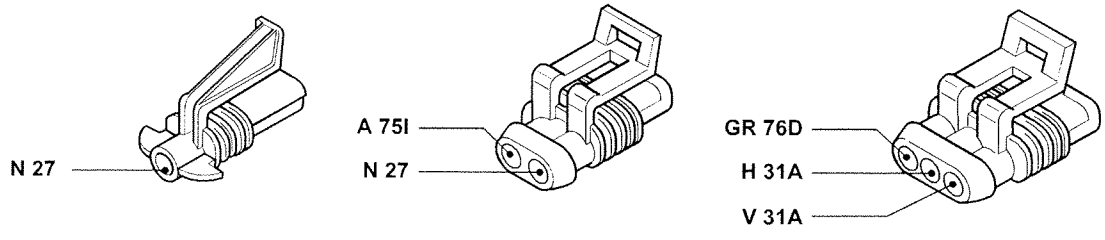

3U267I

P3U267I01

Copyright by Fiat Auto

55.

31A Peripheral control unit (engine comp.)

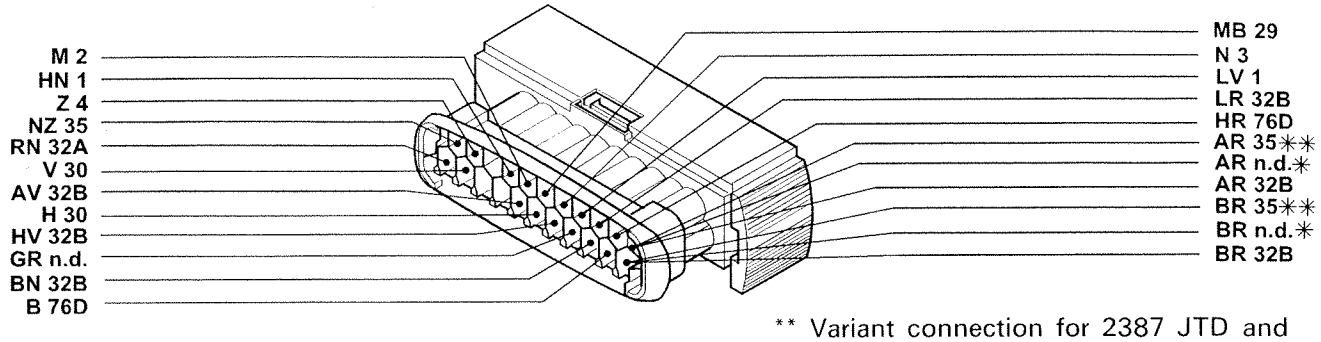

* Variant connection for 2387 TD

** Variant connection for 2387 JTD and 1998 20v T (with air conditioning)

31B Peripheral control unit (engine comp.)

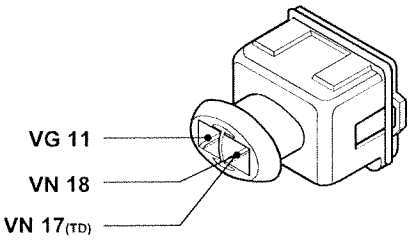

31B Peripheral control unit (engine comp.) (Only for versions without air cond.)

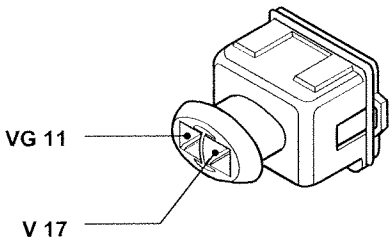

31B Peripheral control unit (engine comp.) (Only for 1995 16v T and 1998 20v T)

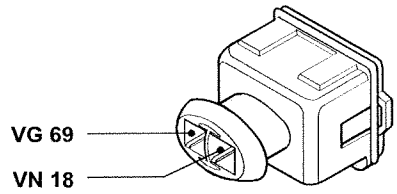

31C Peripheral control unit (engine comp.)

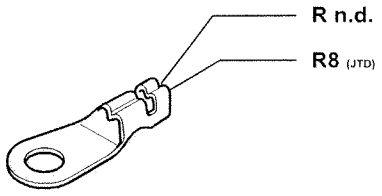

31D Peripheral control unit (engine comp.)

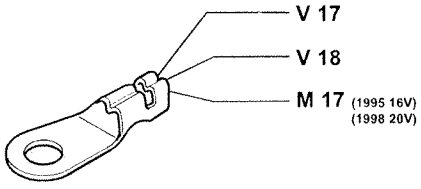

31D Peripheral control unit (engine comp.) (Only for Turbo Diesel versions)

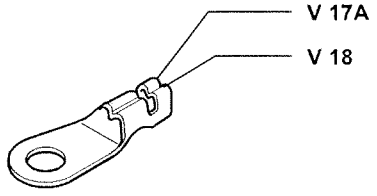

3U268I

P3U268I01

32A Connection between dashboard and left engine compartment cables

(Only for 1998 - 2446)

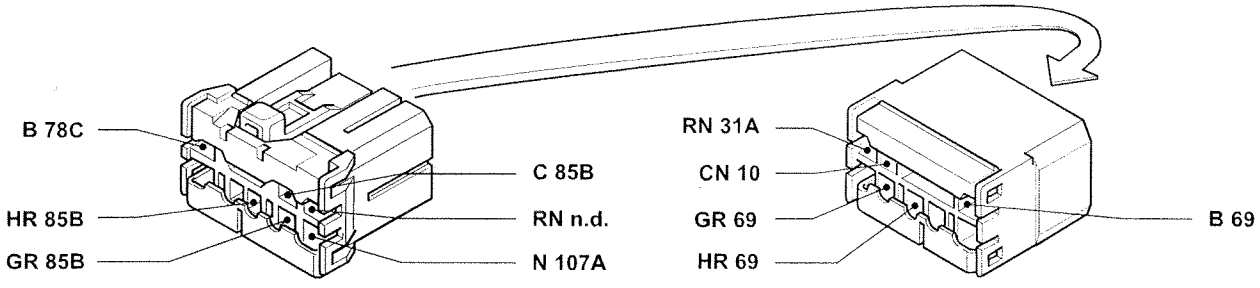

(Only for 2959 - 1995 16v T - 1998 20v T)

(Only for 2387 TD and 2387 JTD)

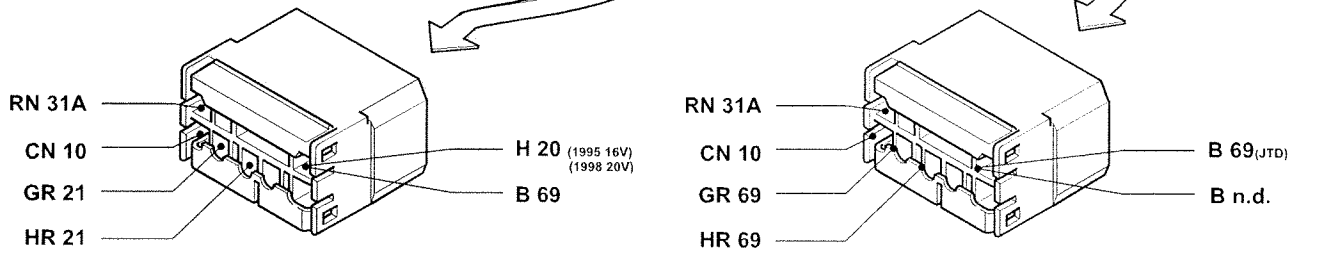

32B Connection between dashboard and left engine compartment cables

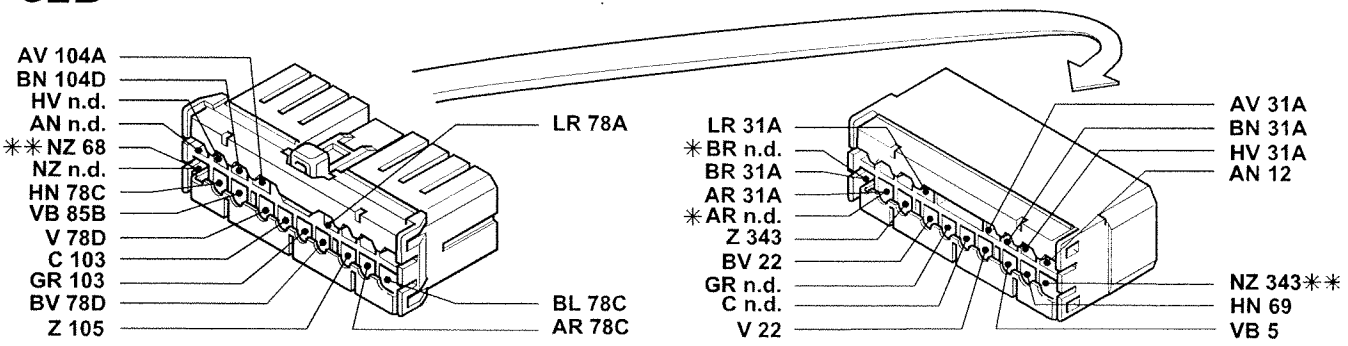

* Variant connection for 2387 TDS

** Variant connection for 1998 - 2446 - 2959 versions with automatic transmission

32C Connection between dashboard and left engine compartment cables

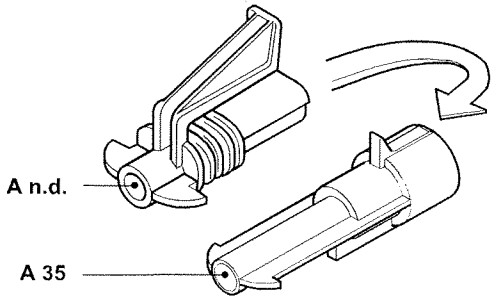

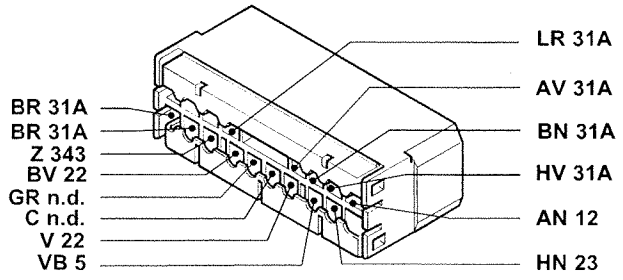

3U269I

P3U269I01

Copyright by Fiat Auto

55.

33A Connection between dashboard and right engine compartment cables
(Only for petrol versions)

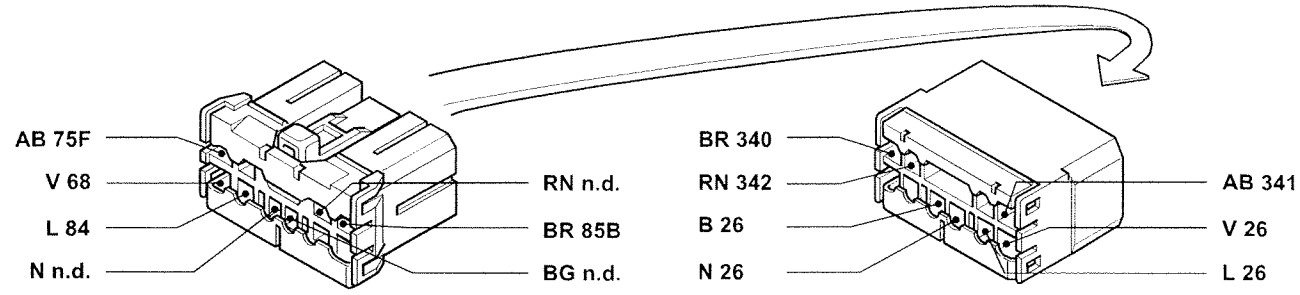

33A Connection between dashboard and right engine compartment cables
(Only for Turbo Diesel versions)

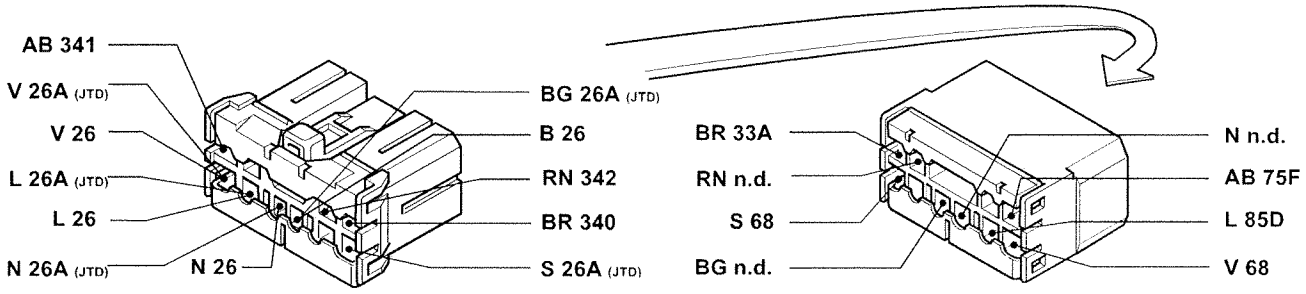

34 Anti-lock brakes electro-hydraulic control unit (A.B.S.)

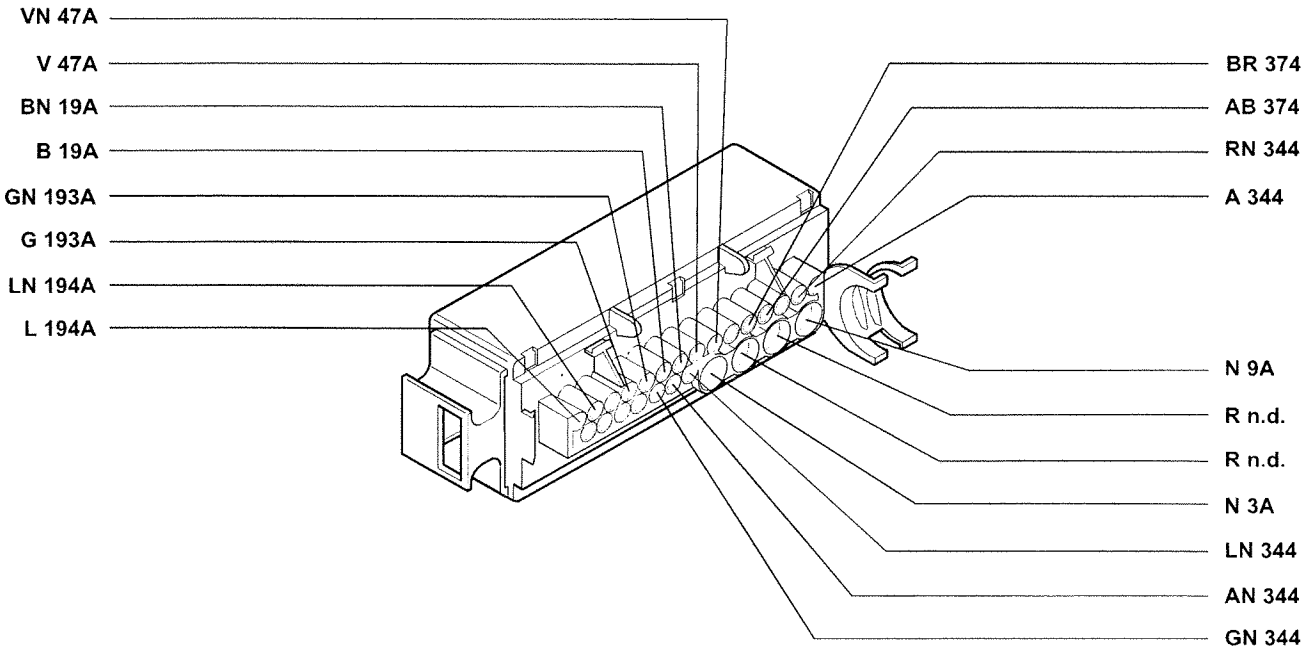

3U270I

P3U270I01

35 Connection between engine compartment and electronic injection cables
(Only for 1998 - 2446 - 1995 16v T)

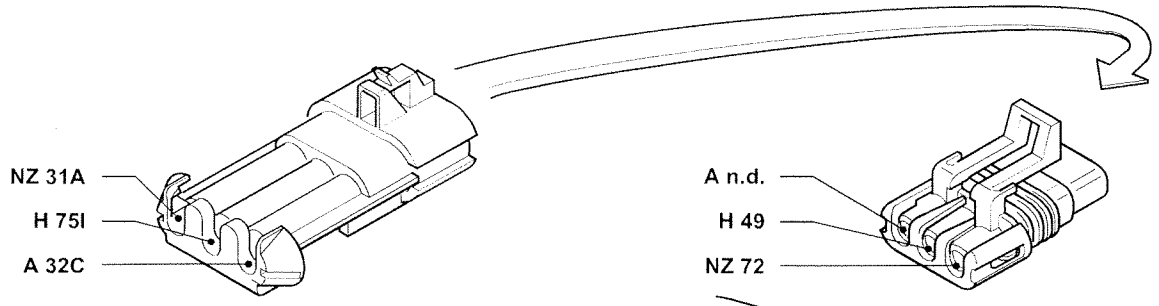

35 Connection between engine compartment and electronic injection cables (Only for 2387 TD)

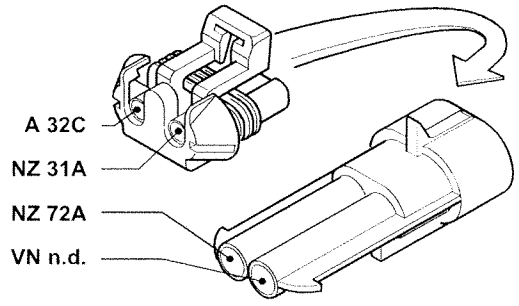

(Only for 2959)

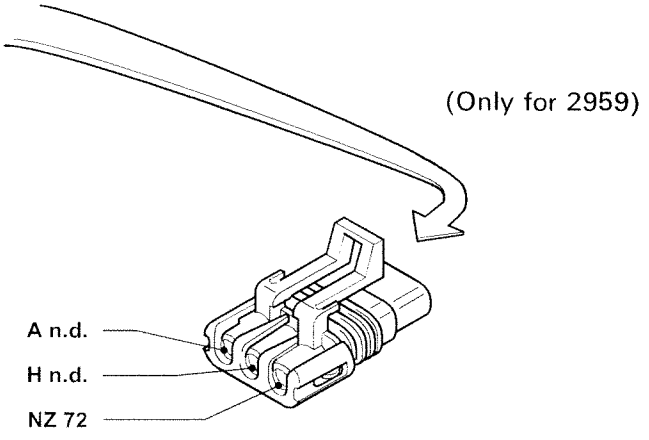

35 Connection between engine compartment and electronic injection cables
(Only for 1998 20v T - 2387 JTD versions)

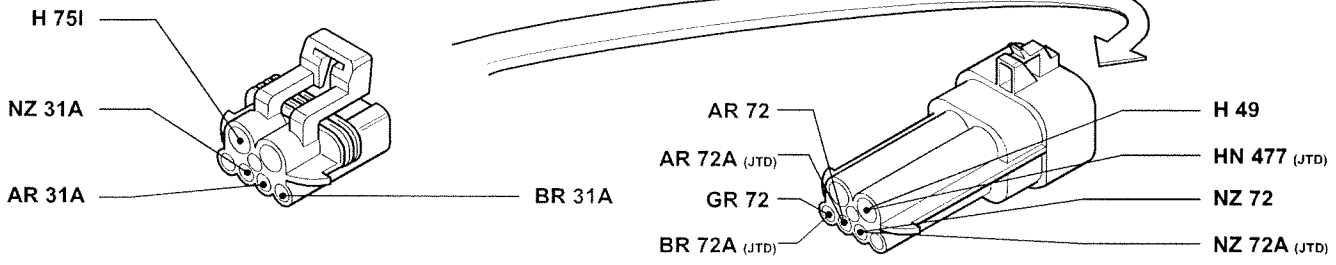

36 Heated Lambda sensor
(Only for 1998 20v T - 1998 - 2446)

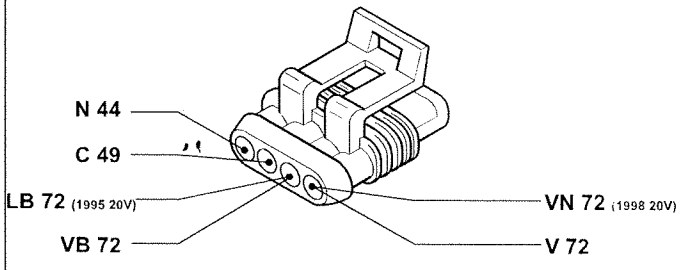

36 Heated Lambda sensor (Only for 2959)

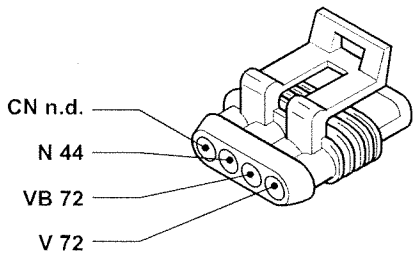

3U271I

P3U271I01

Copyright by Fiat Auto

55.

36 Heated Lambda sensor
(Only for 1995 16v T)

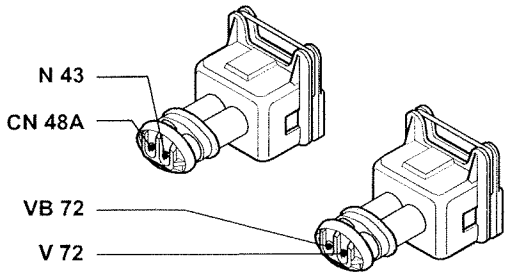

37 Idle adjustment actuator

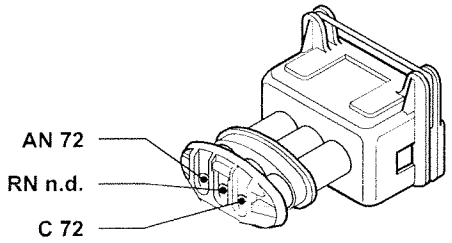

38 Earth for electronic injection

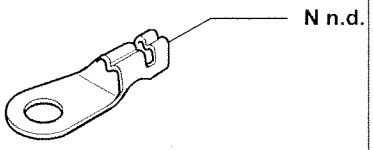

39 Relay for inertia switch
(Only for 2387 TD)

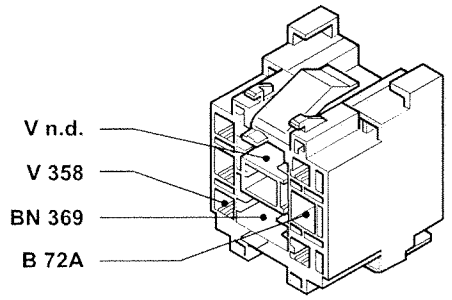

40 E.G.R. solenoid valve
(Only for petrol versions)

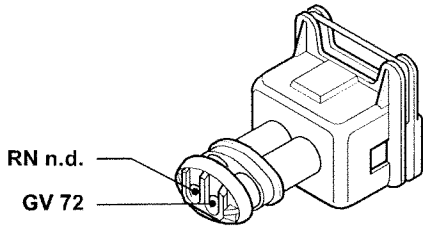

40 E.G.R. solenoid valve
(Only for Turbo Diesel versions)

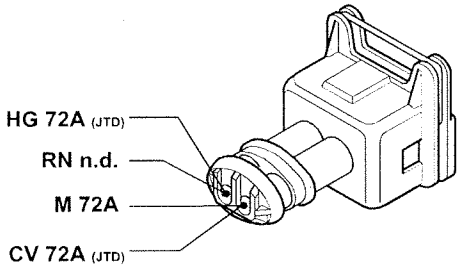

41 Petrol vapour cut out solenoid valve

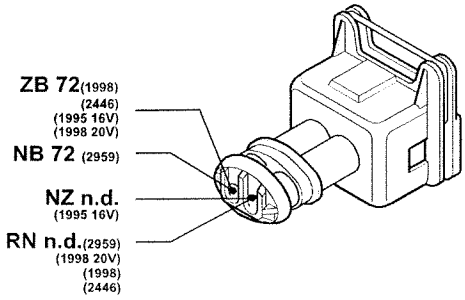

42 30A fuse protecting electronic injection

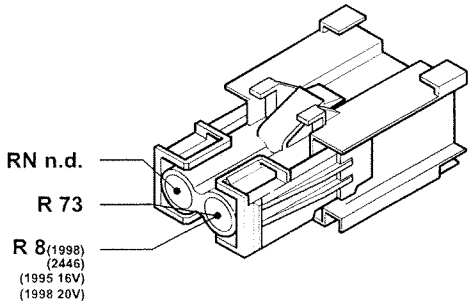

3U272I

P3U272I01

43 Electronic earth
(Only for petrol versions)

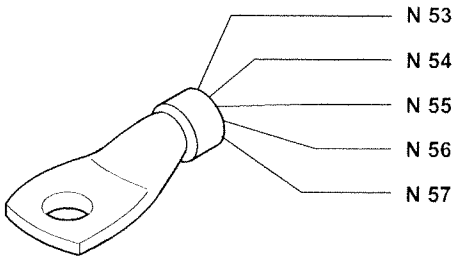

43 Electronic earth (Only for 1995 16v T)

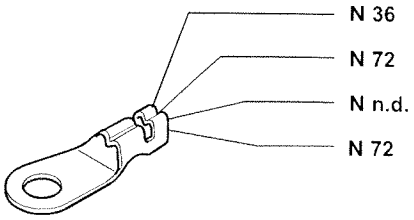

44 Power earth (Only for 2383 TD)

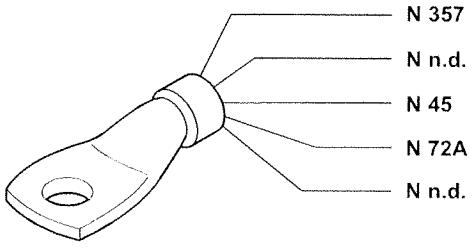

44 Power earth
(Only for 1998 - 2446 - 1998 20v T)

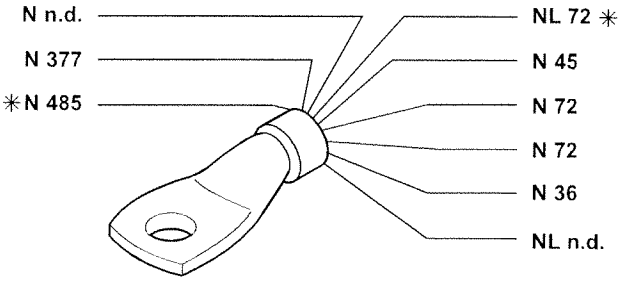

* Variant connection for 1998 - 2446 without automatic transmission

44 Power earth (Only for 2959)

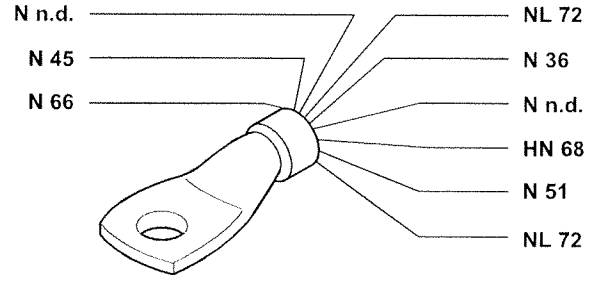

44 Power earth (Only for 1995 16v T)

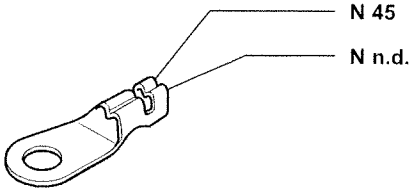

44 Power earth (Only for 2387 JTD)

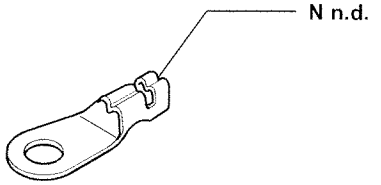

45 Air flow meter
(Only for 2387 JTD)

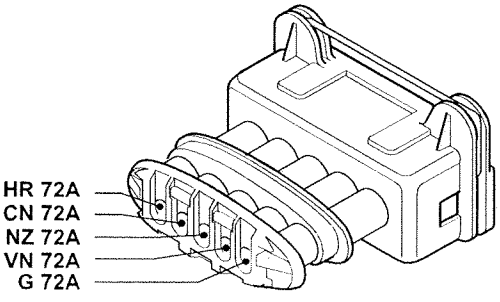

3U273I

P3U273I01

Copyright by Fiat Auto

55.

45 Air flow meter
(Only for 1998 - 1998 20v T - 2446)

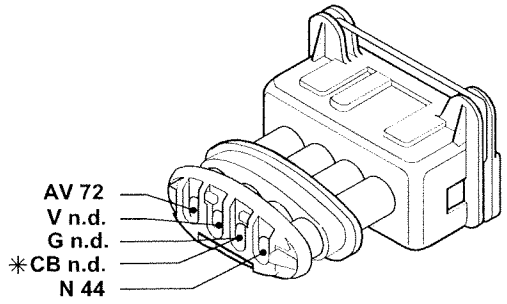

* Variant connection for 1998/2446

45 Air flow meter
(Only for 2959)

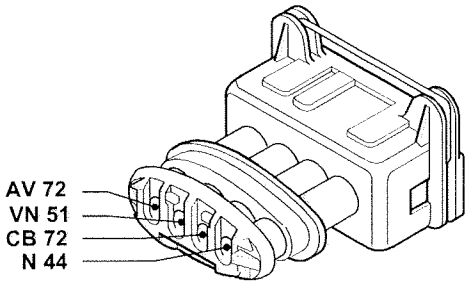

45 Air flow meter
(Only for 1995 16v T)

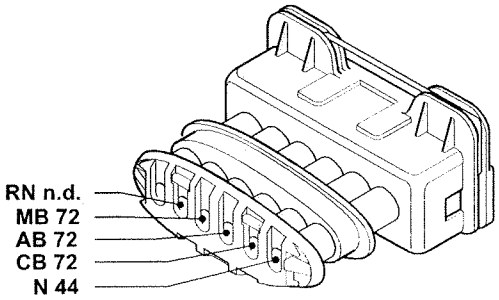

45 Air flow meter
(Only for 2387 TD)

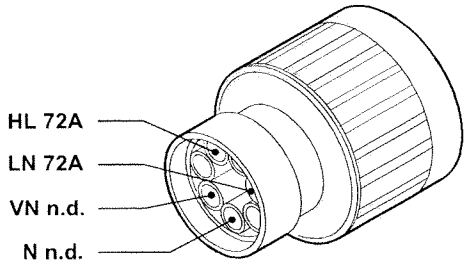

46 7.5A fuse protecting electronic injection
(Only for 1995 16v T - 2387 JTD)

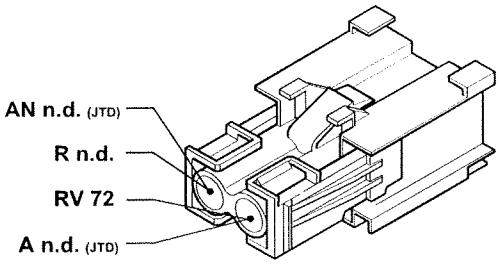

46A 7.5A fuse protecting electronic injection
(Only for 2387 JTD)

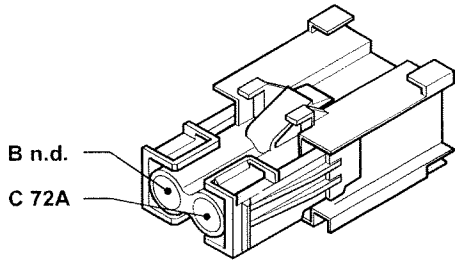

47(*) 47A Sensor on right front wheel (A.B.S.)
Connection for A.B.S. sensor cable on right front wheel

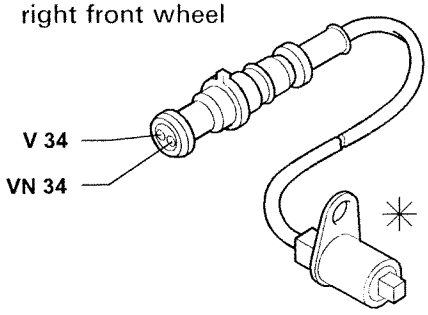

48 10A fuse protecting heated Lambda sensor and air flow meter relay
(Only for 2959)

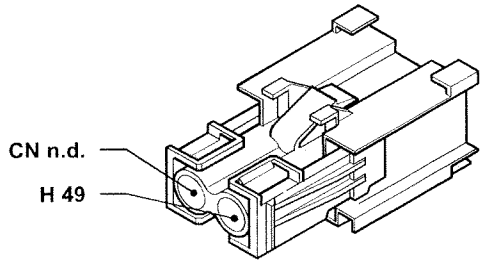

P3U274I01

3U274I

48A 7.5A fuse protecting heated Lambda sensor (Only for 1995 16v T)

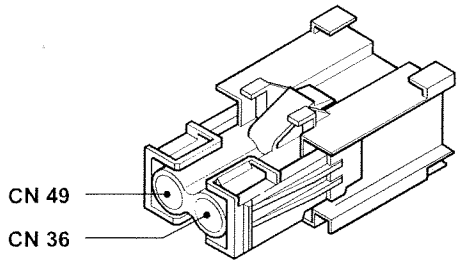

49 Electric fuel pump and heated Lambda sensor relay feed
(Only for petrol versions)

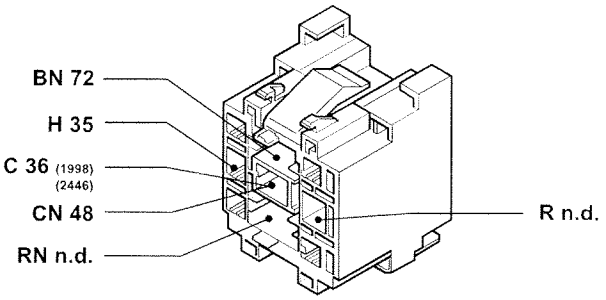

49 Electric fuel pump and heated Lambda sensor relay feed
(Only for 2959)

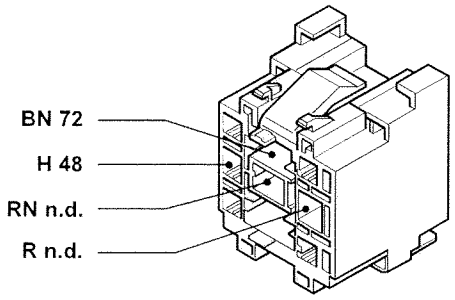

50 Electronic injection system relay feed
(Only for 2387 JTD)

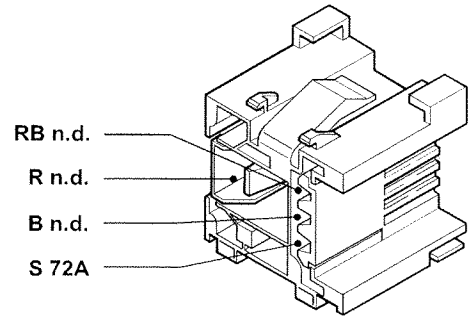

50 Electronic injection system relay feed

(Only for naturally aspirated petrol versions)

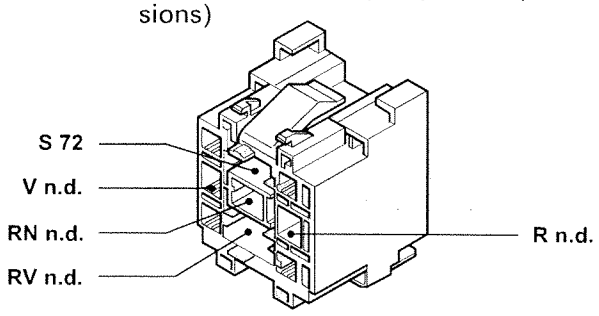

50 Electronic injection system relay feed

(Only for Turbo petrol versions)

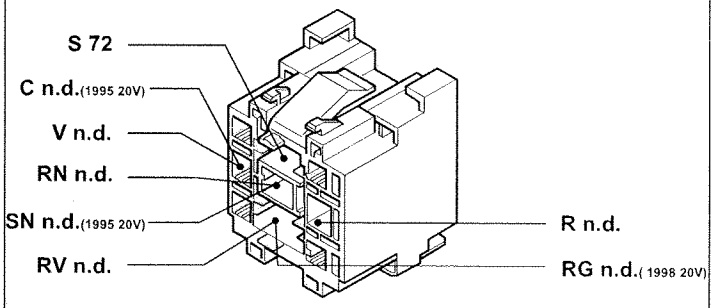

0 Electronic injection system relay feed
(Only for 2387 TD)

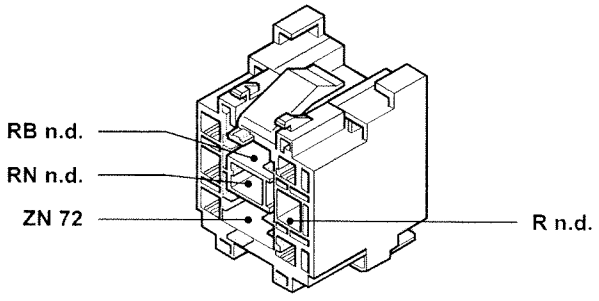

51 Air flow meter relay feed
(Only for 2959)

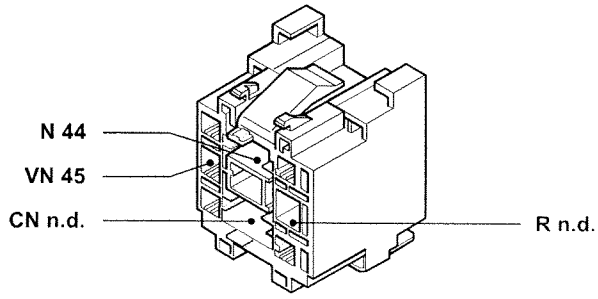

3U275I

P3U275I01

Copyright by Fiat Auto

55.

53- 54- 55- 56- 57 Ignition coil (Only for 1998 - 1998 20v T - 2446)

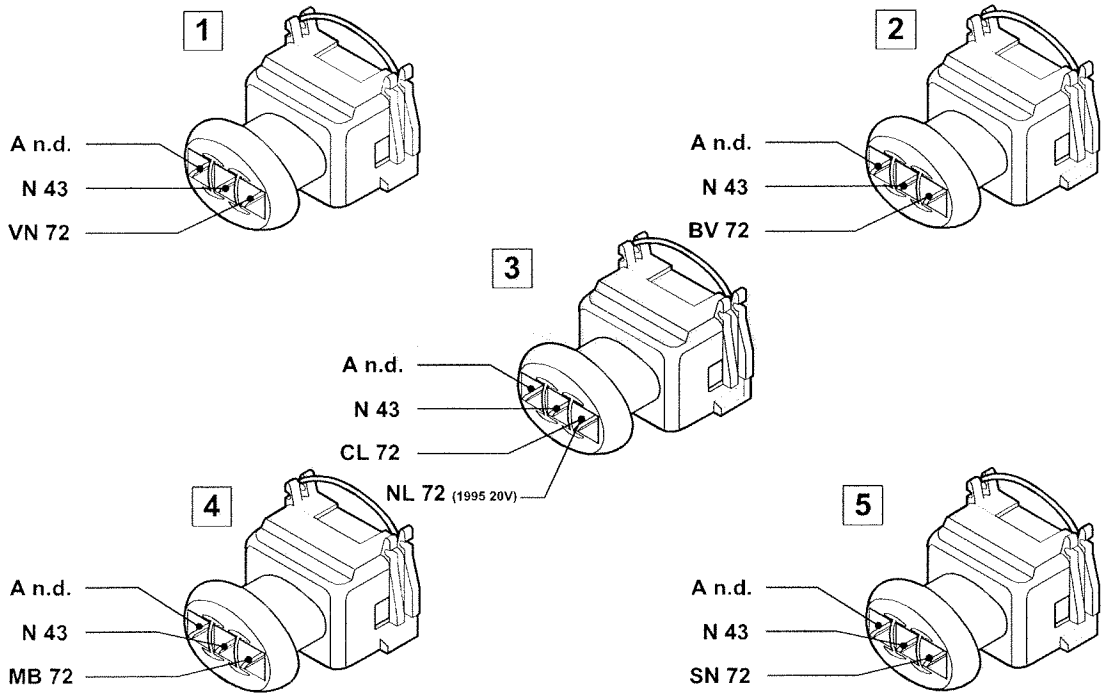

52- 53- 54- 55- 56- 57 Ignition coil (Only for 2959)

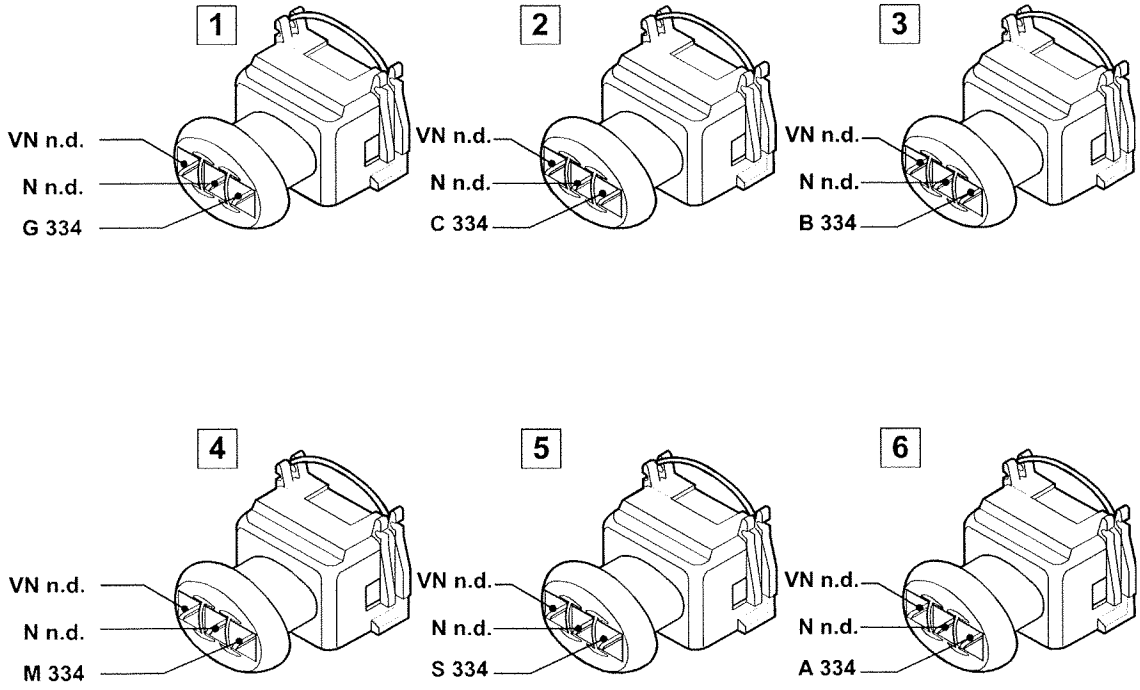

P3U276I01

3U276I

58 Injectors (Only for 2446)

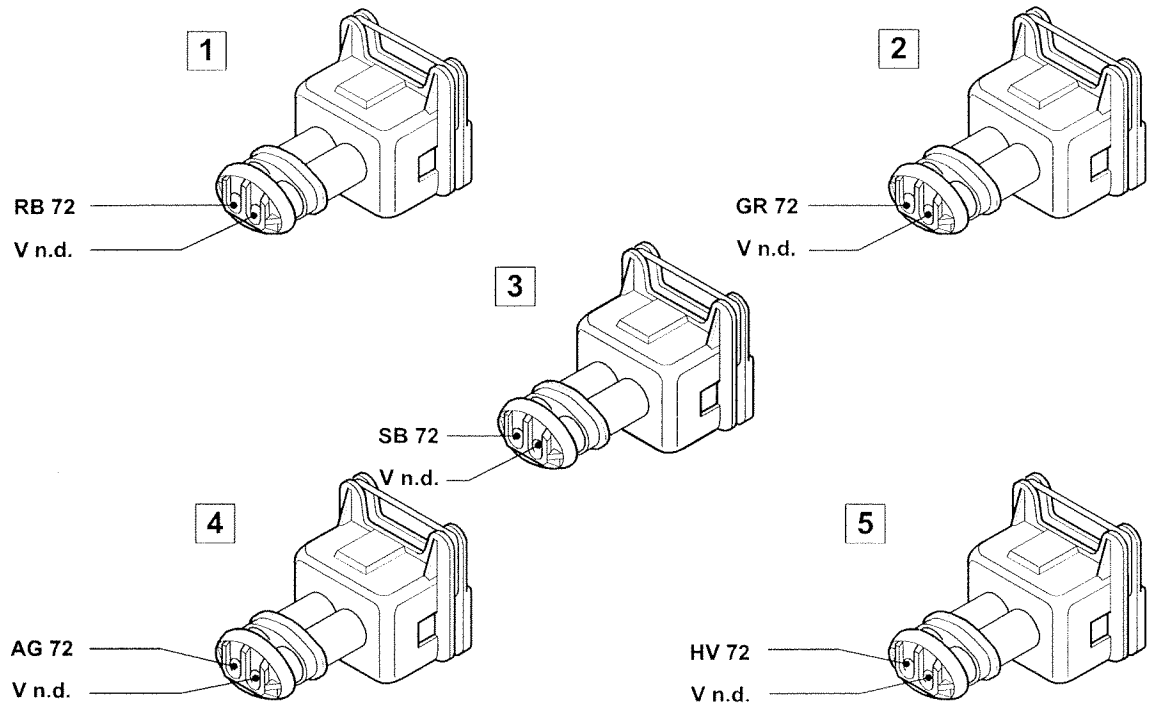

58 Injectors (Only for 2959)

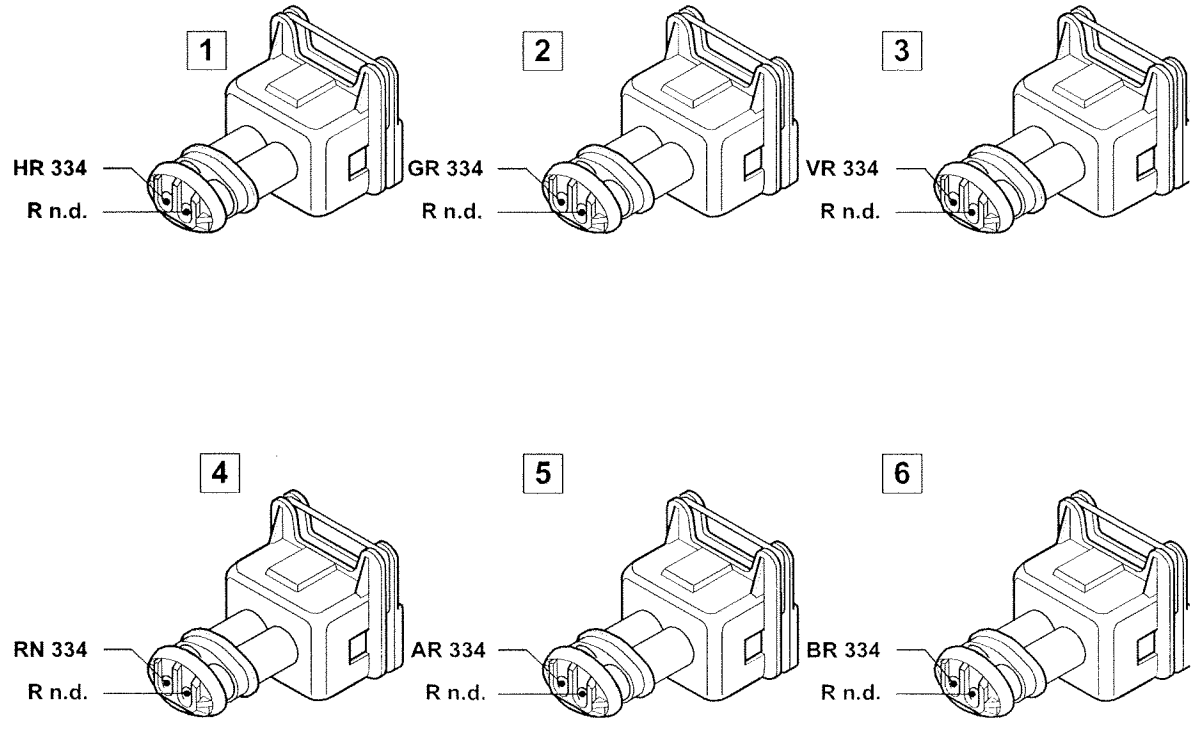

P3U277I01

3U277I

58 Injectors (Only for 1998 20v T)

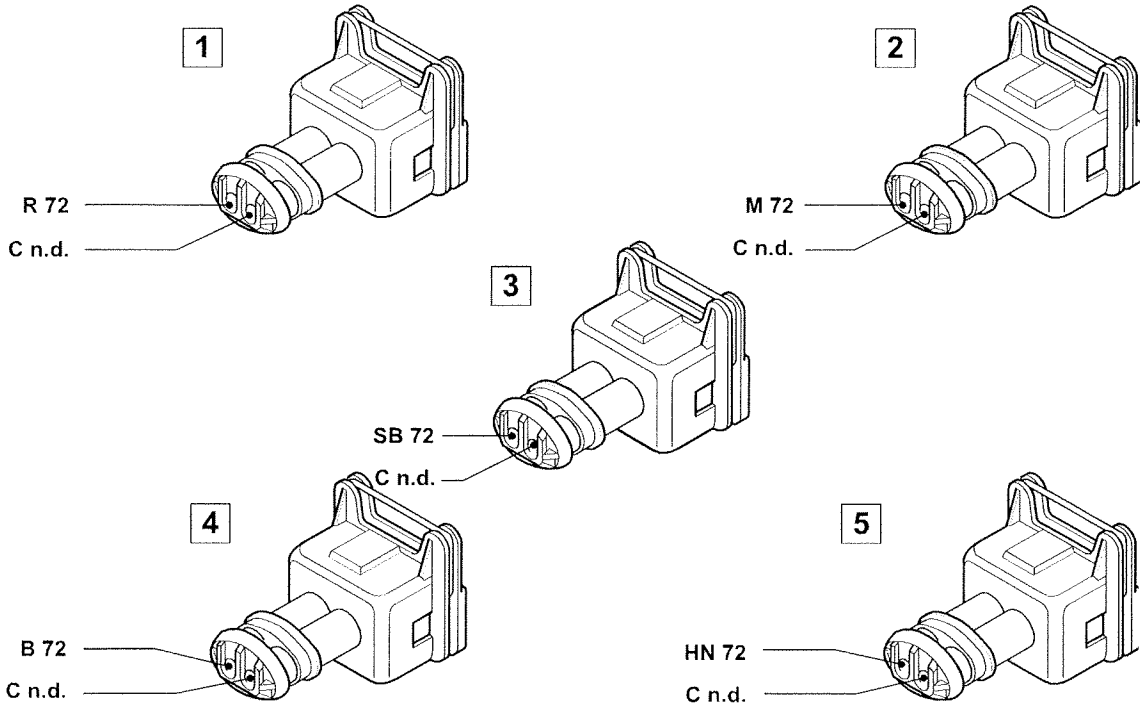

58 Injectors (Only for 2387 JTD)

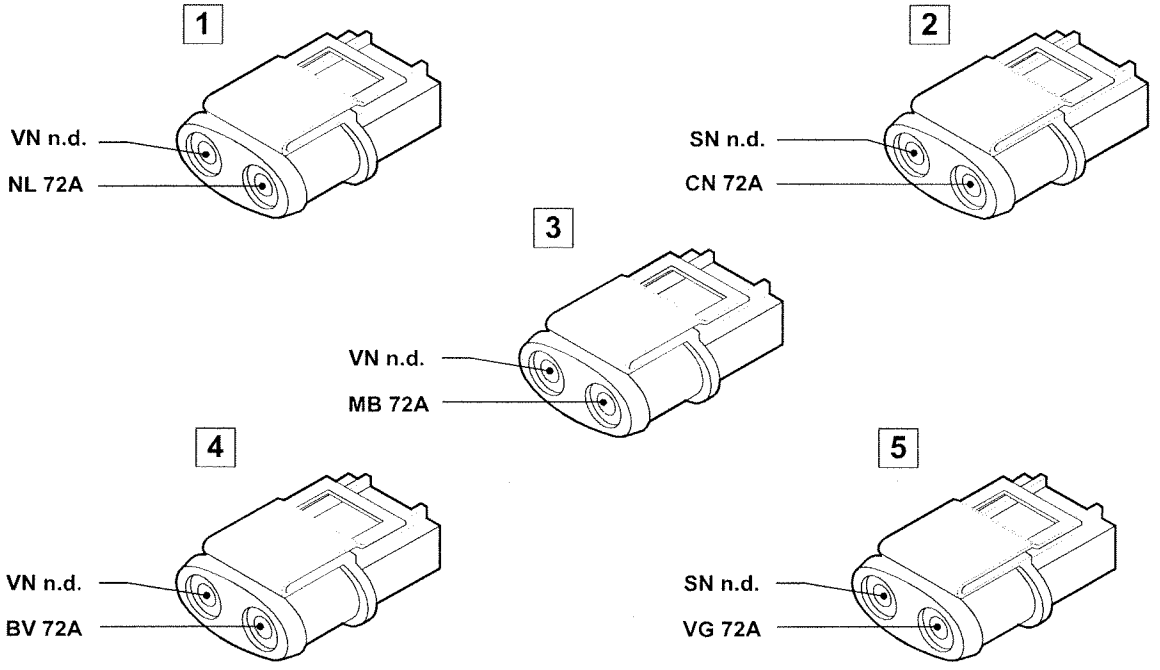

3U278I

P3U278I01

58 Injectors (Only for 1995 16v T)

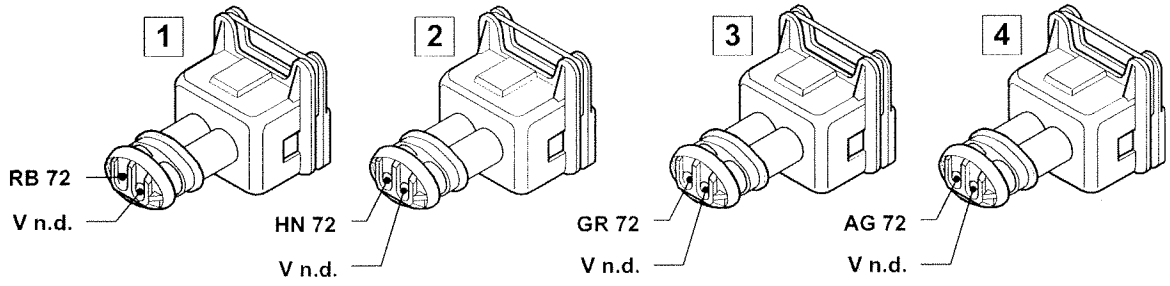

59 1st Detonation sensor

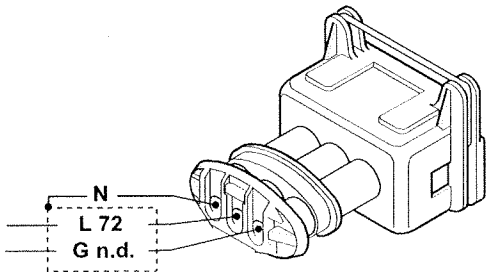

59 1st Detonation sensor
(Only for 1998 20v T)

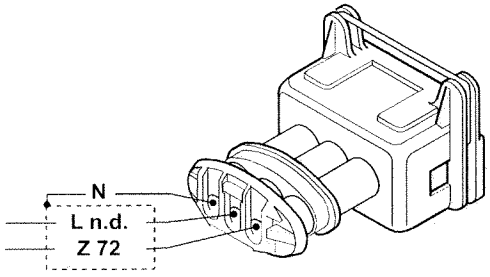

60 2nd Detonation sensor

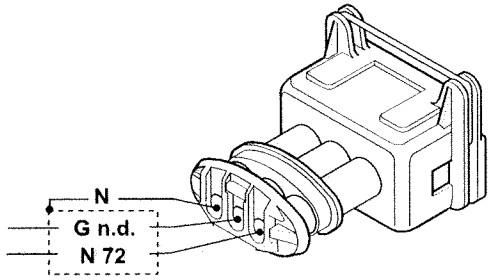

60 2nd Detonation sensor
(Only for 1998 20v T)

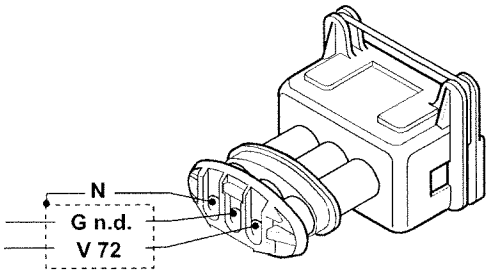

61 Engine coolant temperature sensor
(Only for petrol versions)

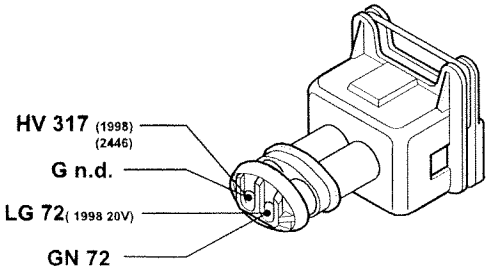

61 Engine coolant temperature sensor

(Only for Turbo Diesel versions)

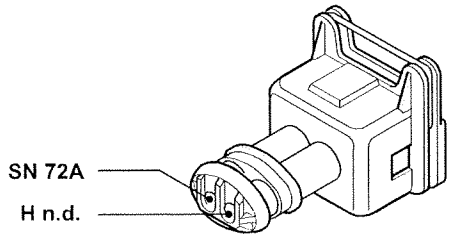

3U279I

P3U279I01

Copyright by Fiat Auto

55.

62 Rpm sensor (Only for petrol versions)

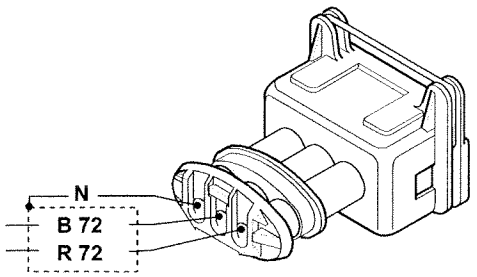

62 Rpm sensor (Only for 2387 TD)

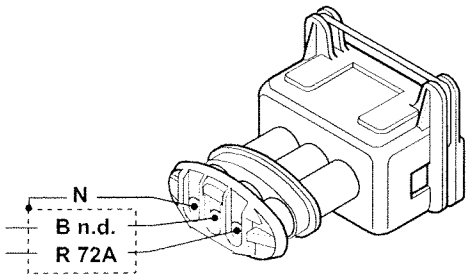

62 Rpm sensor (Only for 2387 JTD)

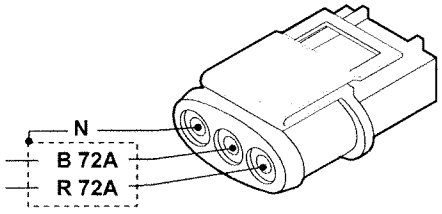

63 Potentiometer on butterfly valve

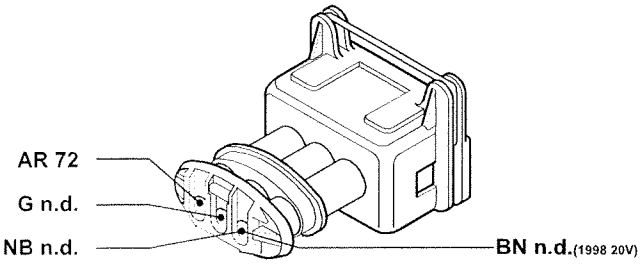

63 Potentiometer on butterfly valve (Only for 2959)

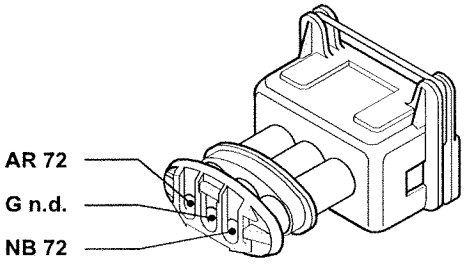

65 Power module (Only for 1995 16v T)

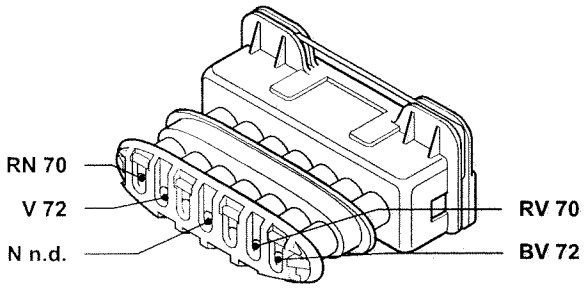

66 Timing sensor (Only for 1998 - 1995 16v T - 2446)

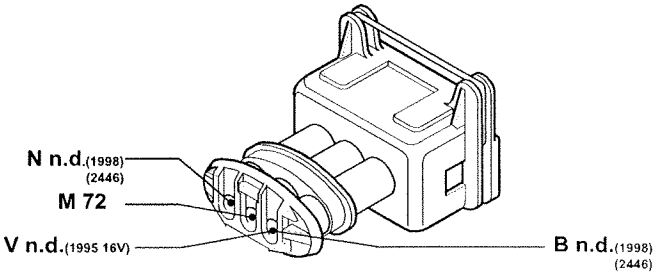

66 Timing sensor (Only for 2959)

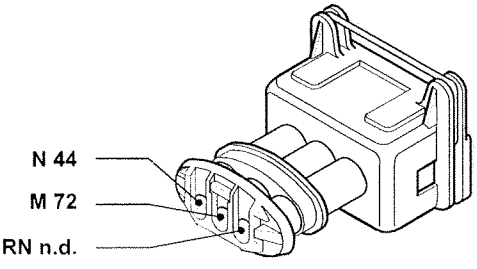

3U280I

P3U280I01

66 Timing sensor

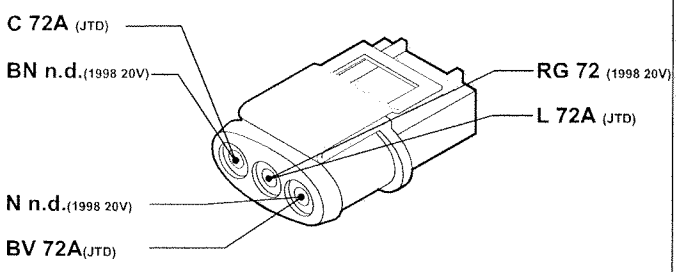

(Only for 1998 - 1998 20v T - 2446)

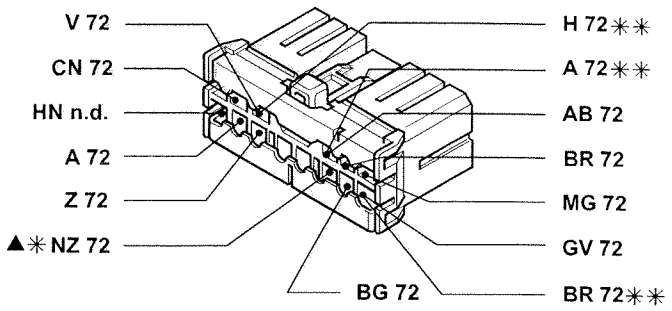

68 Connection between dashboard and electronic injection cables

(Only for 2959)

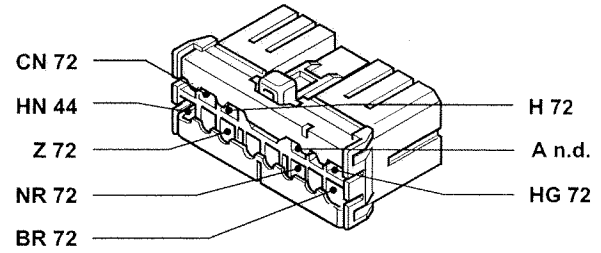

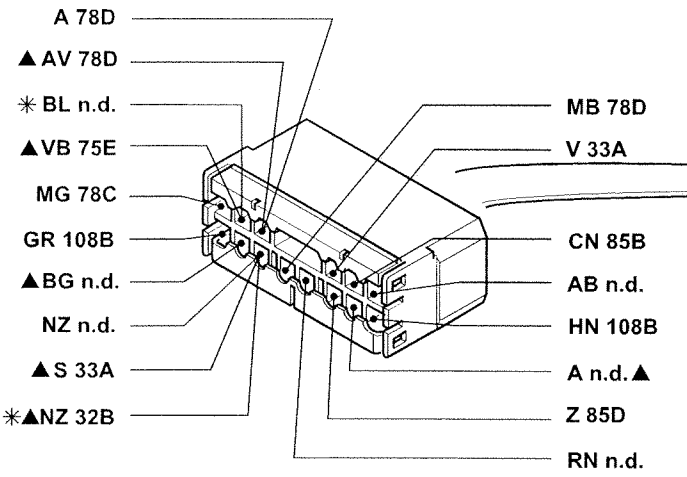

(Only for 1995 16v T)

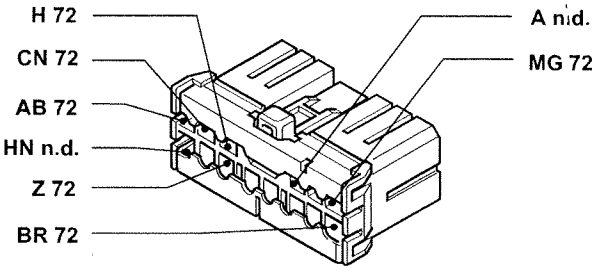

* Variant connection for 1998 20v T
** Variant connection for 1998 - 2446
* Variant connection for 1998 - 2446 with automatic transmission

70 H.T. distributor (Only for 1995 16v T)

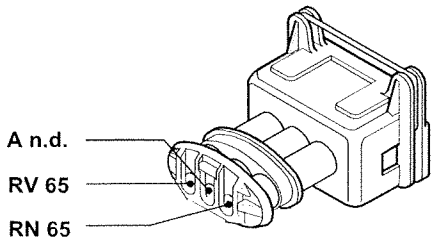

(Only for 2387 TD and 2387 JTD)

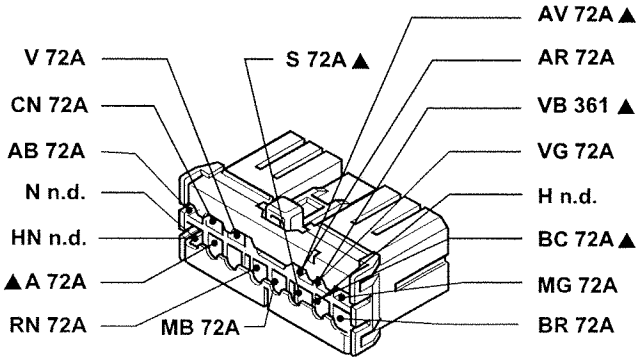

▲ Variant connection for 2387 JTD

3U2811

P3U281I01

69 Engine services cable connection (Only for 1998 - 2446)

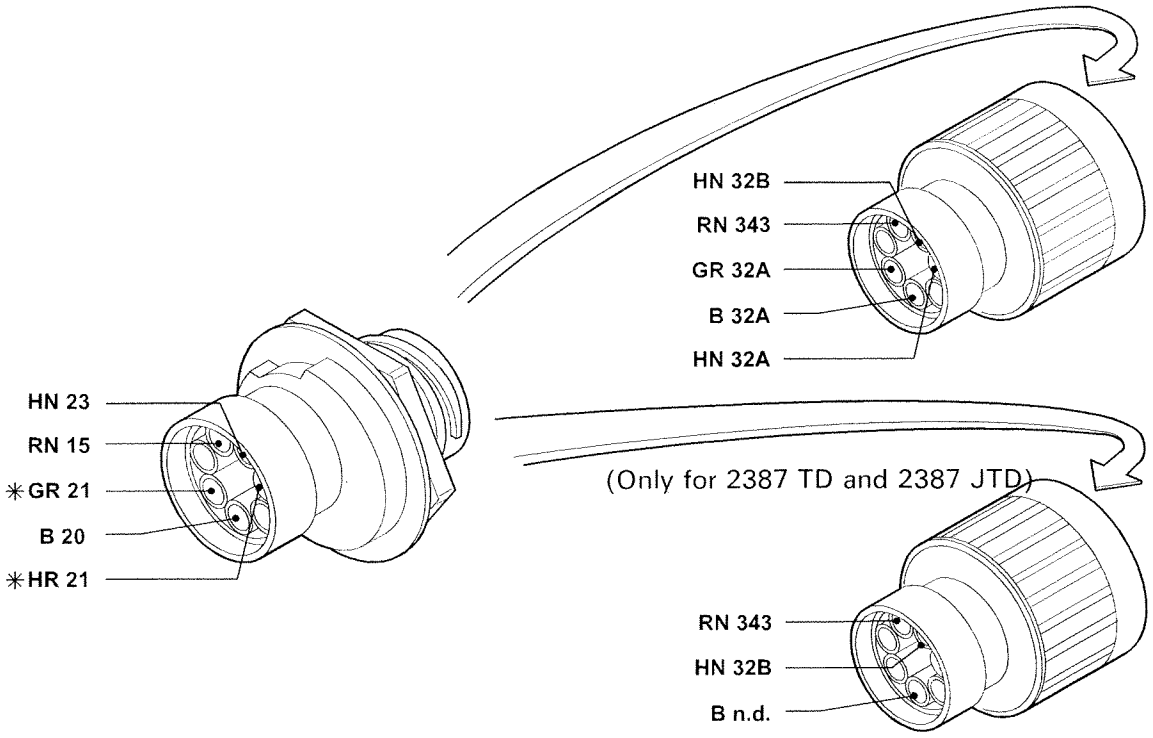

* Non existent for Turbo Diesel versions

69 Engine services cable connection (Only for 2959)

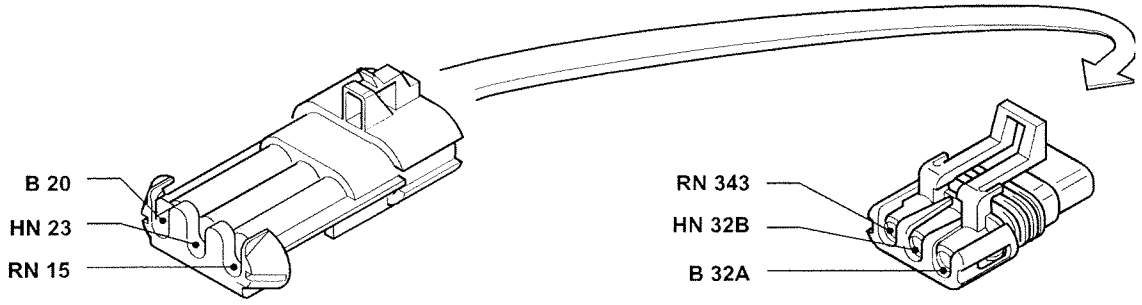

69 Engine services cable connection (Only for 1995 16v T - 1998 20v T)

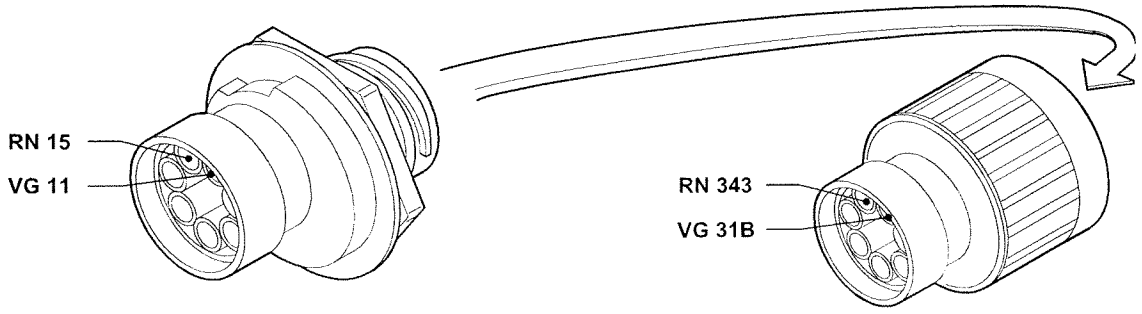

3U282I

P3U282I01

72 Fuel injection control unit (Only for 1995 16v T)

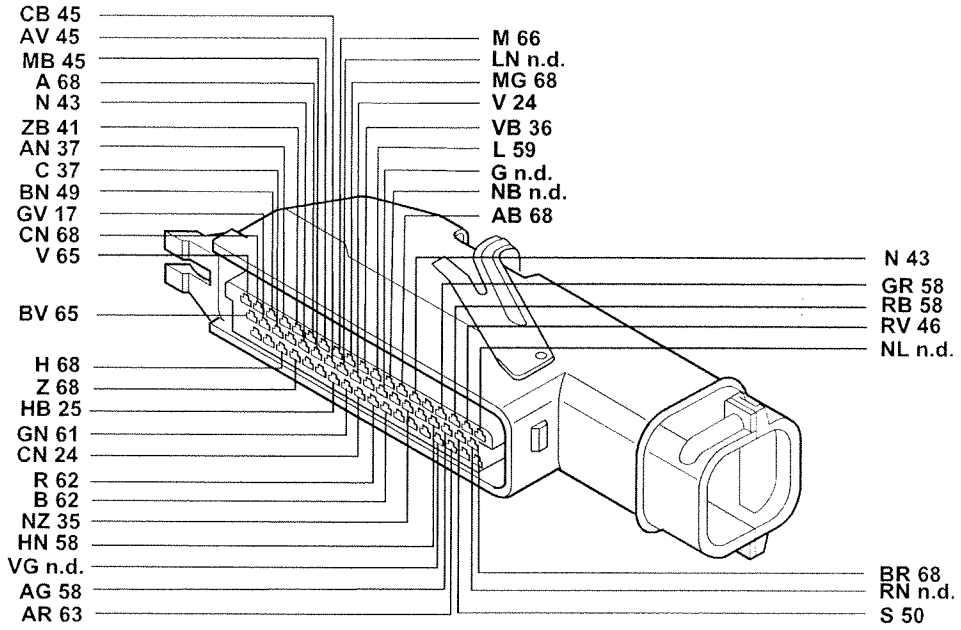

72 Fuel injection control unit (Only for 1998 20v T)

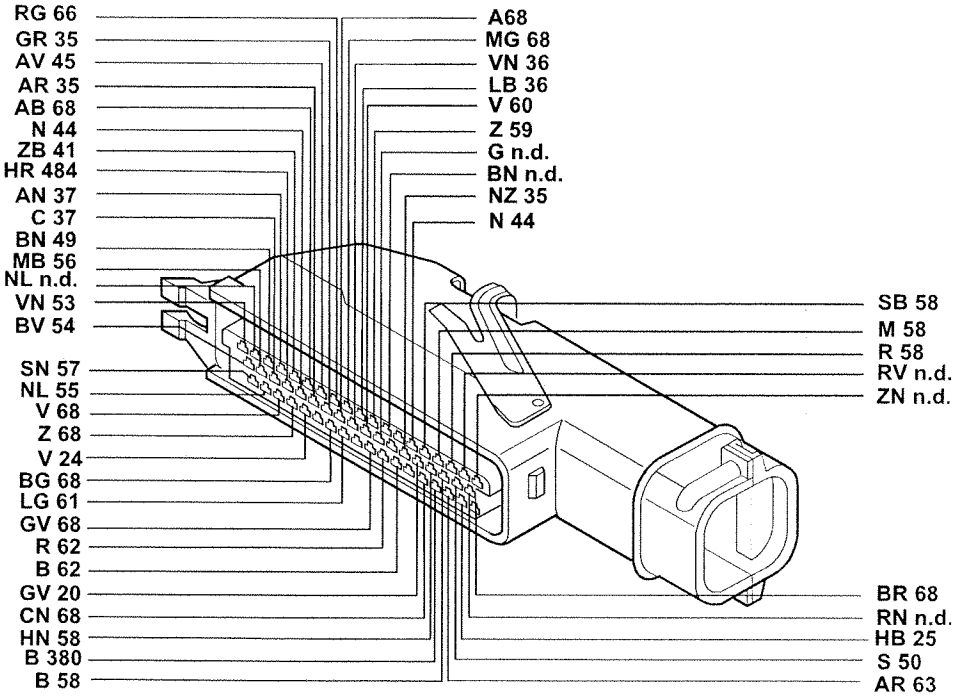

3U283I

P3U283I01

Copyright by Fiat Auto

55.

72 Fuel injection control unit (Only for 1998 - 2446)

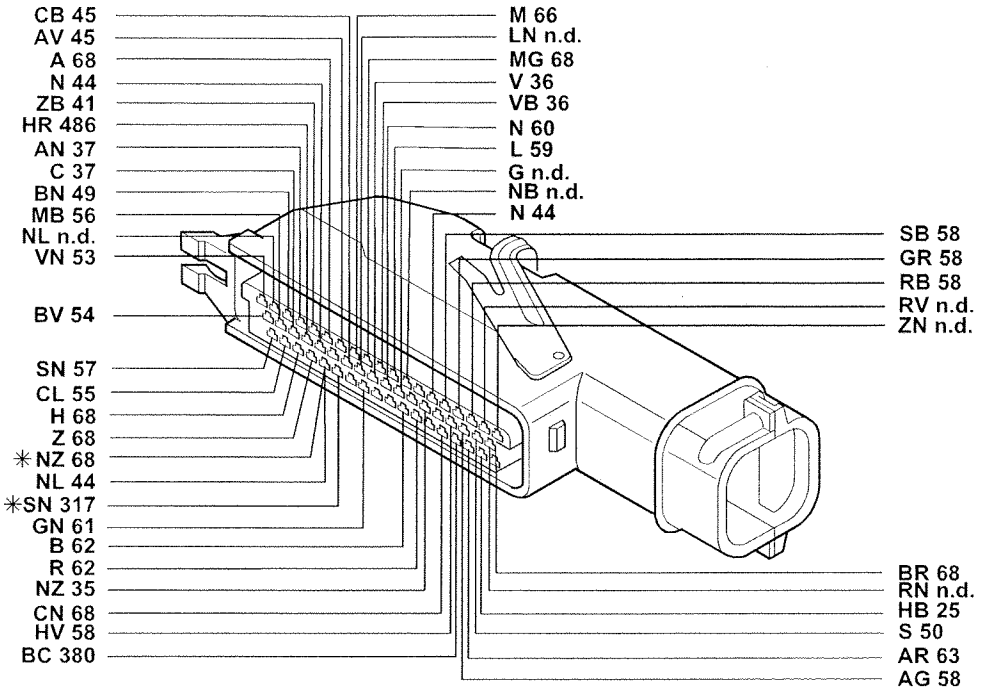

* Variant connection for version with automatic transmission

72 Fuel injection control unit (Only for 2959)

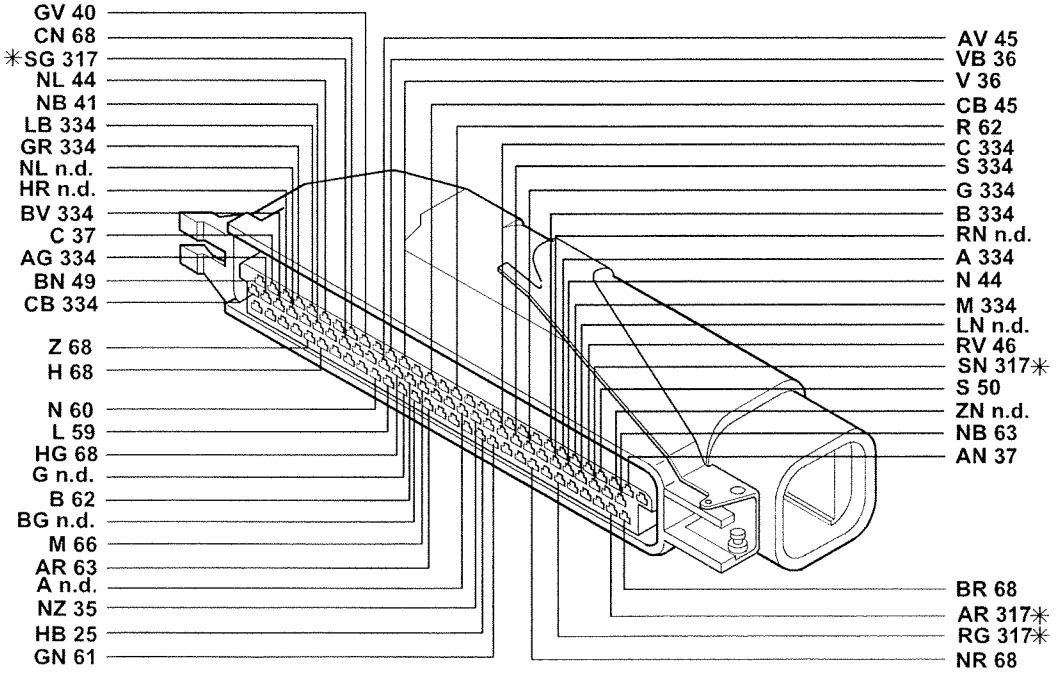

* Variant connection for version with automatic transmission

3U2841

P3U284101

72A Fuel pump electronic control unit (Only for 2387 TD)

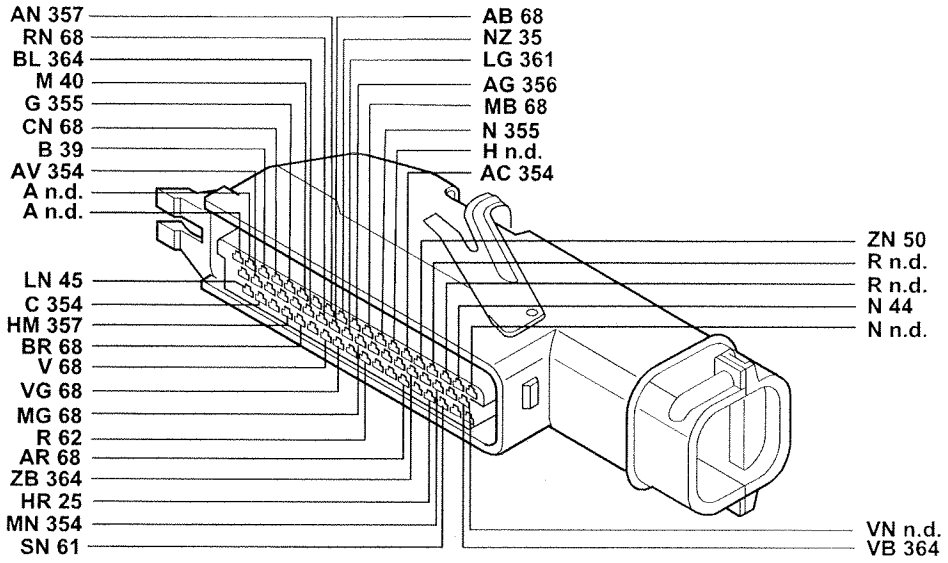

73 Secondary connector block

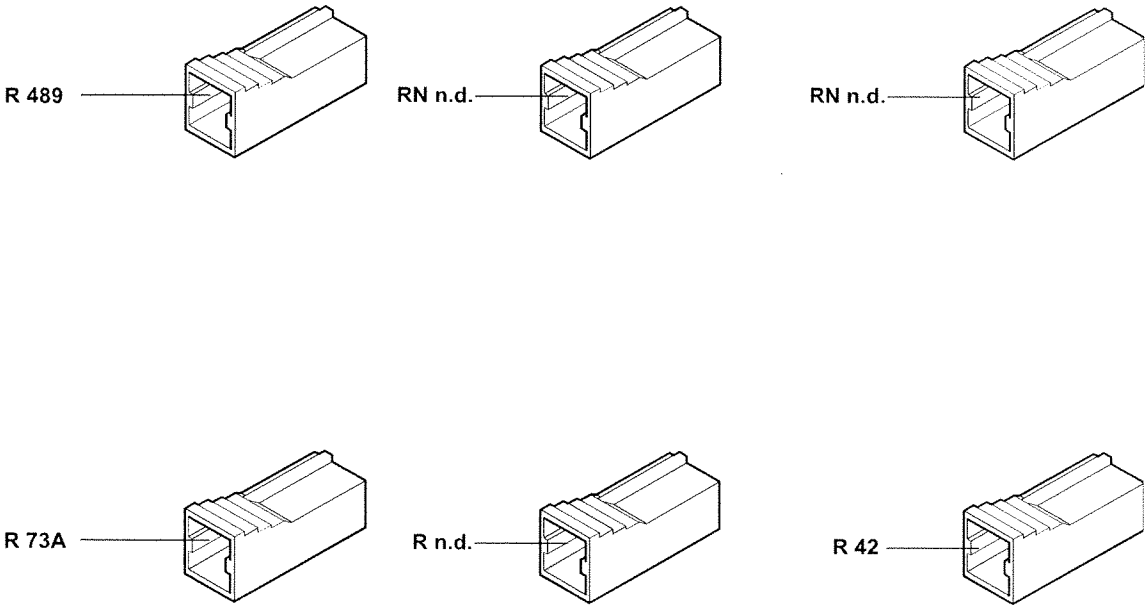

3U285I

P3U285I01

55.

72A Fuel pump electronic control unit (Only for 2387 JTD)

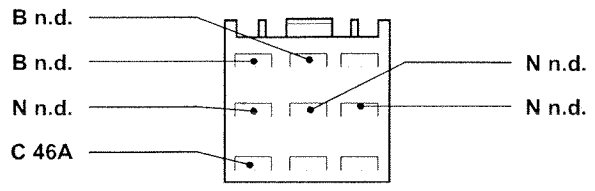

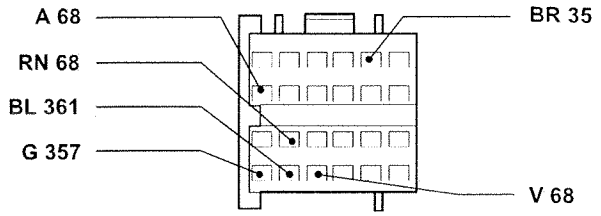

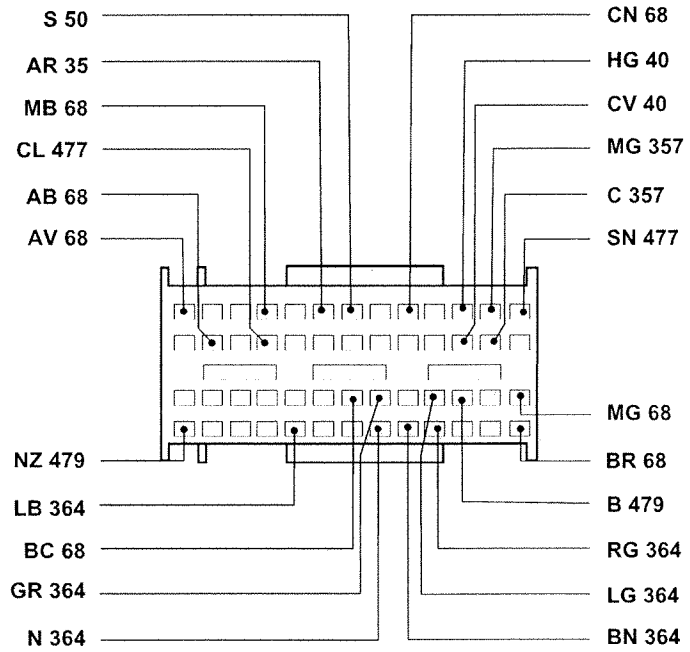

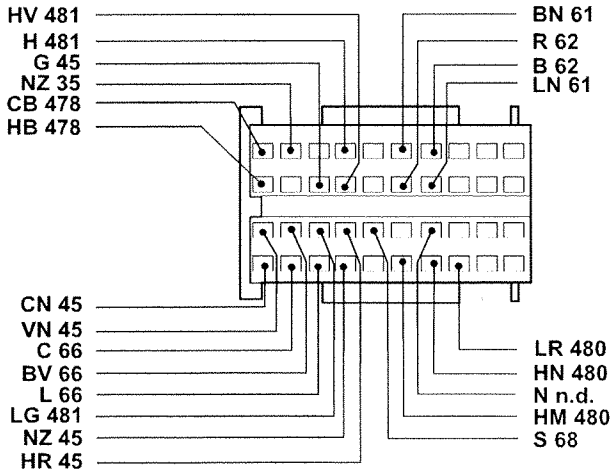

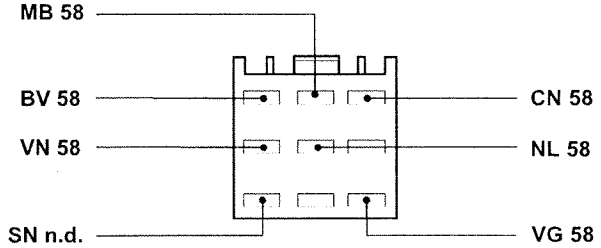

3U286I

P3U286I01

73A 80A fuse protecting rear services

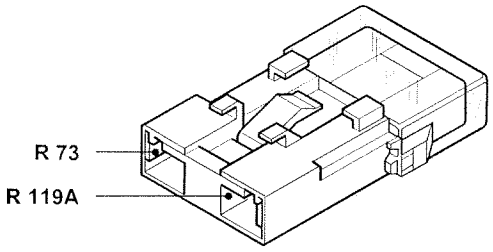

73B 60A protective fuse for I.G.E. control unit /junction unit

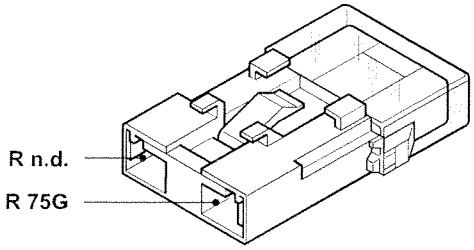

73C 30A fuse protecting ignition switch/alarm device

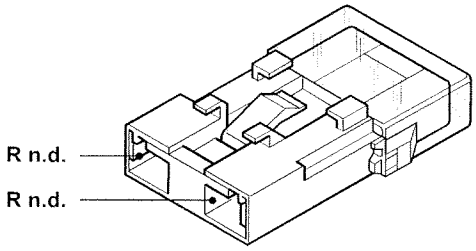

74 80A fuse protecting peripheral control unit (engine compartment)

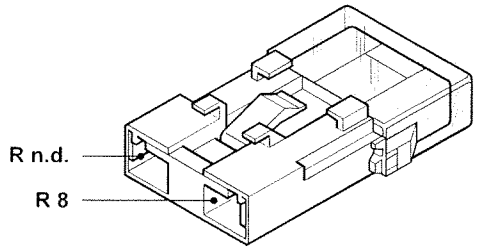

75A Junction unit (dashboard)

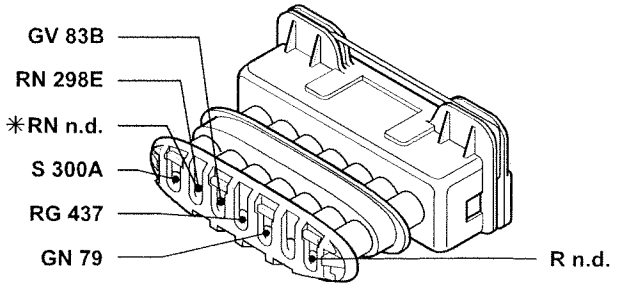

* Variant connection for COUPE' versions

75B Junction unit (dashboard)

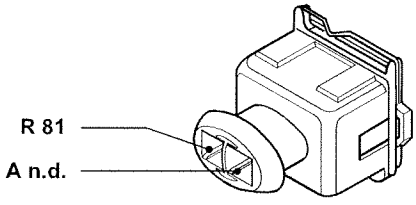

75C Junction unit (dashboard)

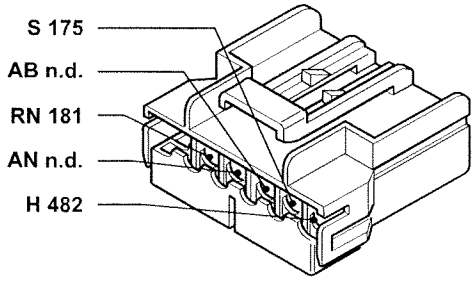

75E Junction unit (dashboard)

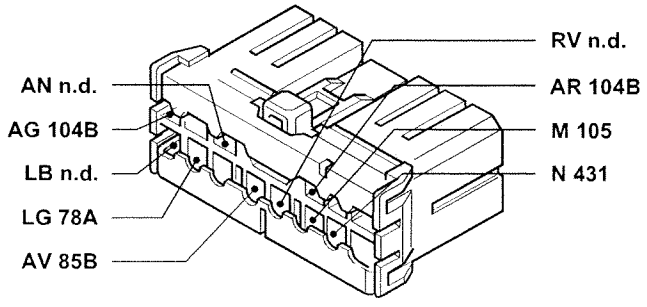

3U287I

P3U287I01

Copyright by Fiat Auto

75F Junction unit (dashboard)

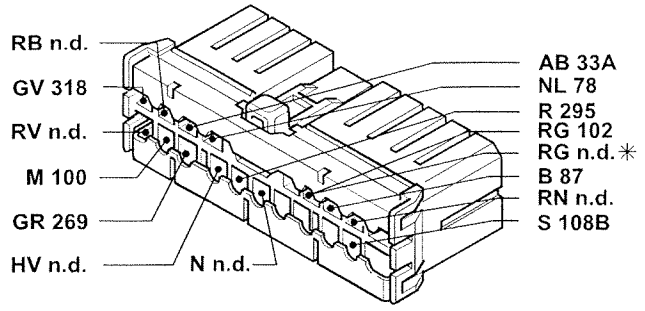

* Variant connection for 2959 version with automatic transmission

75G Junction unit (dashboard)

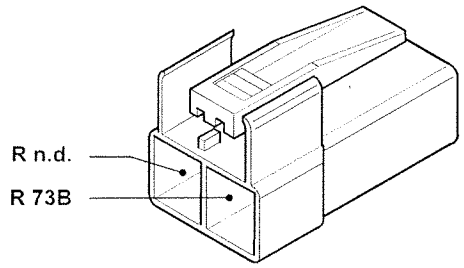

75H Junction unit (dashboard)

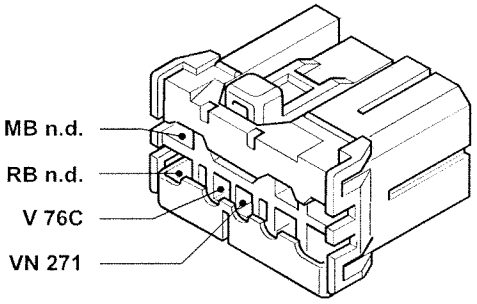

75I Junction unit (dashboard)

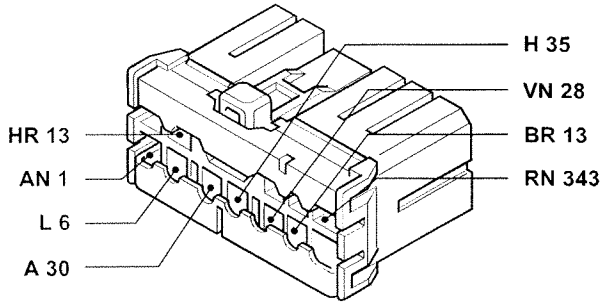

76A I.G.E. control unit

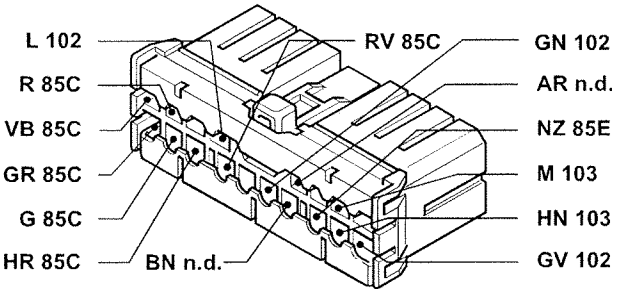

76B I.G.E. control unit

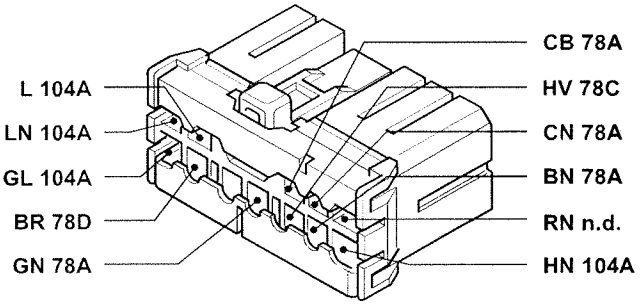

76C I.G.E. control unit

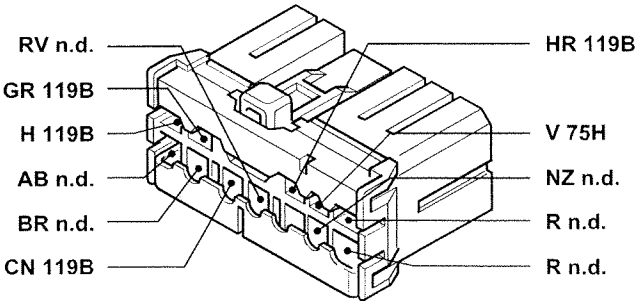

76D I.G.E. control unit

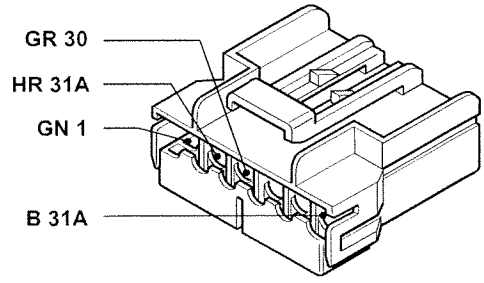

3U288I

P3M01WL01

76E I.G.E. control unit

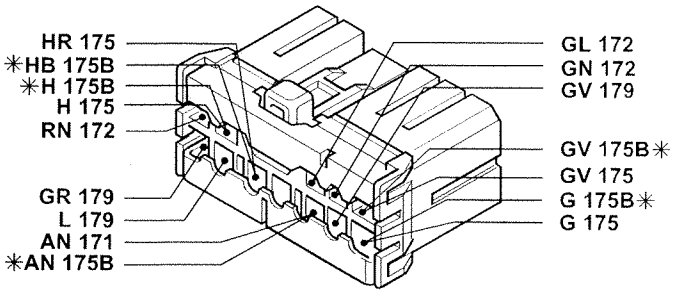

* Variant connection for estate version

77 10A fuse protecting anti-lock brakes (A.B.S.)

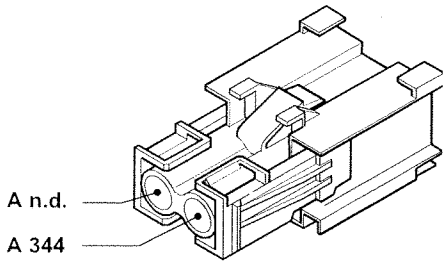

78A Trailer direction indicator warning light

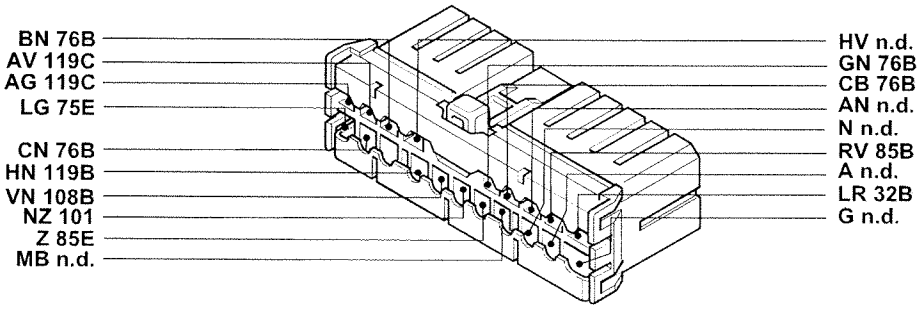

78B Driver's side heated seat warning light

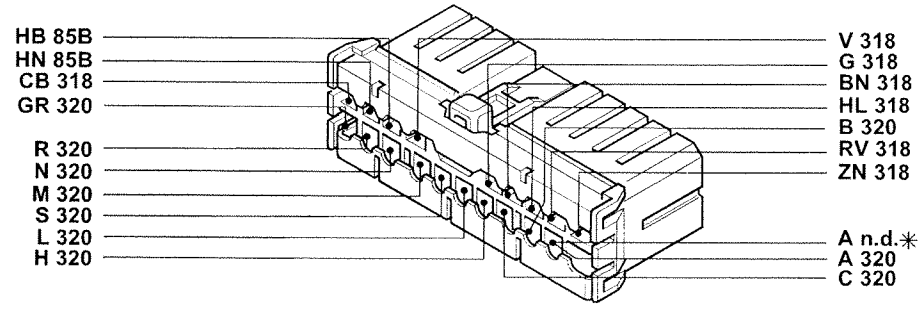

* Variant connection for version without S.C.S.

78C Heated rear windscreen warning light

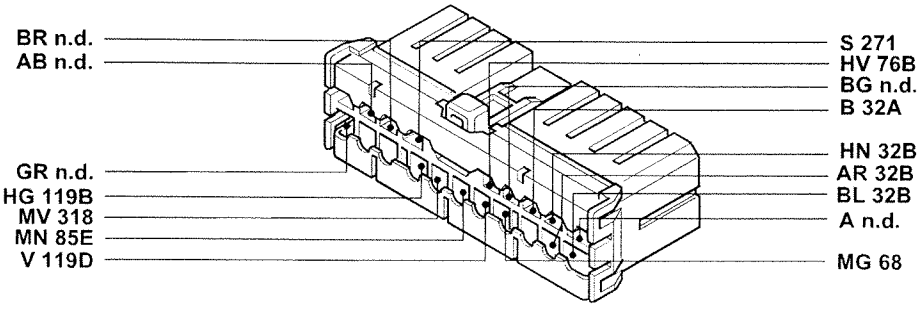

3U289I

P3U289I01

Copyright by Fiat Auto

55.

78D Fog lights warning light

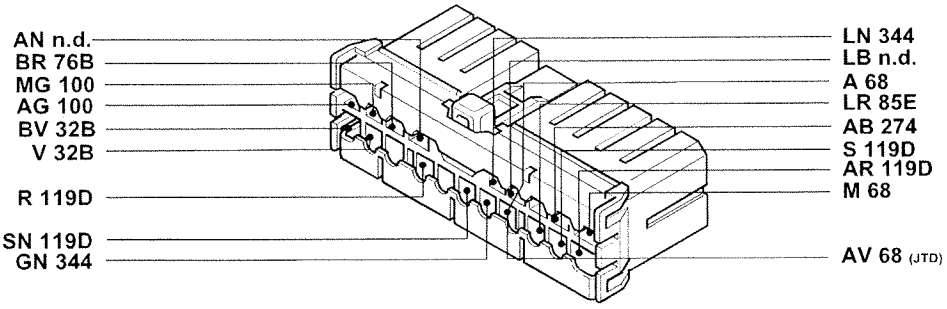

79 Connection between dashboard and courtesy light cables

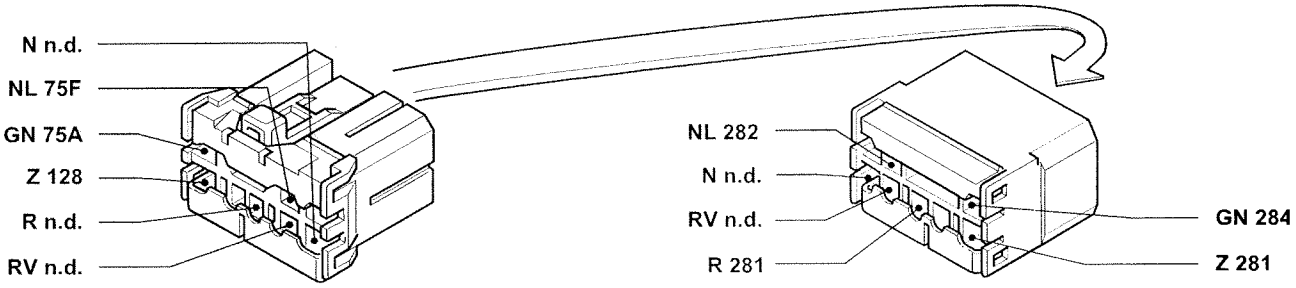

80 Power earth in dashboard

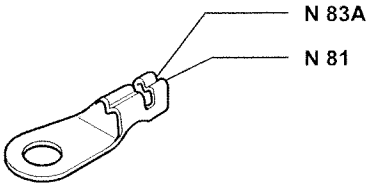

81 Climate control fan (Brushless)

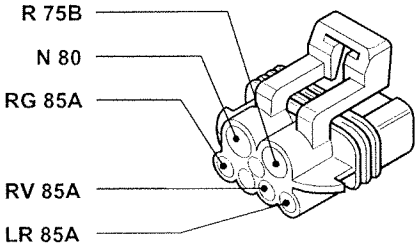

82 Air recirculation motor

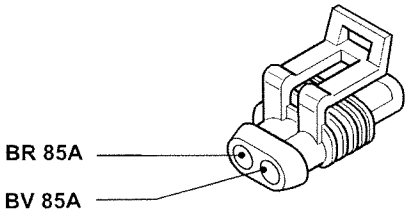

84 Single stage pressure switch (2959 V6 24) (Only for 2959)

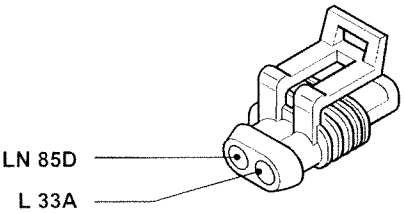

P3U290I01

3U290I

83 Windscreen wiper control unit

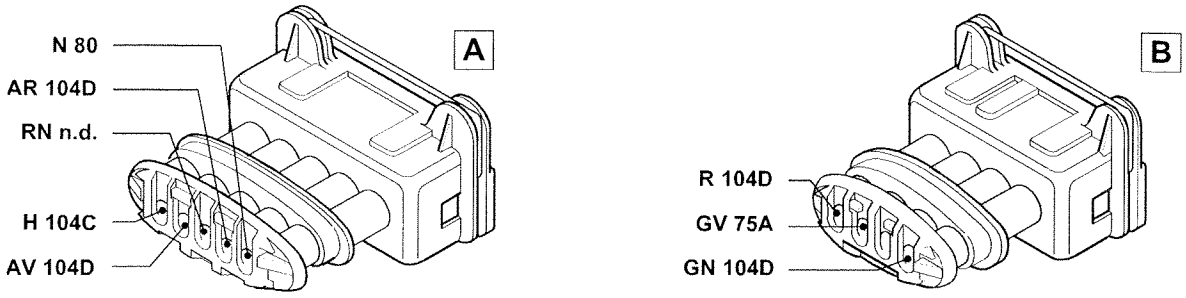

85A Infocenter control unit

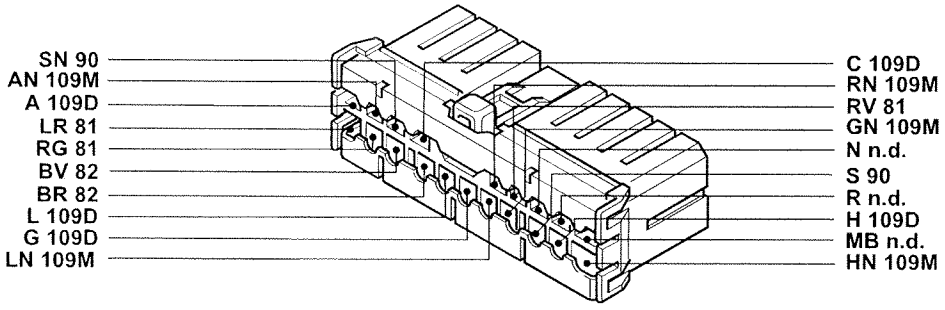

85B Infocenter control unit

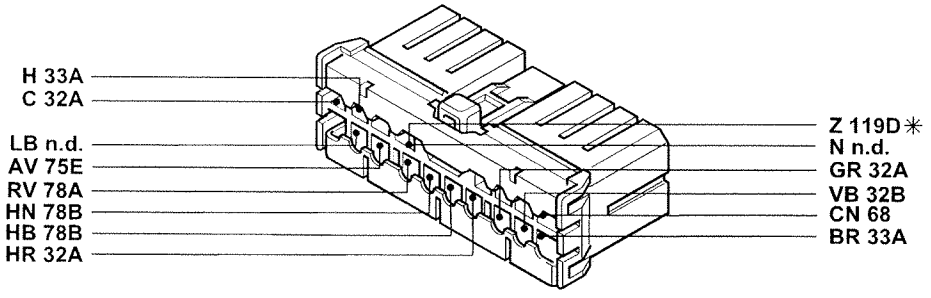

* Variant connection for versions with S.C.S.

85C Infocenter control unit

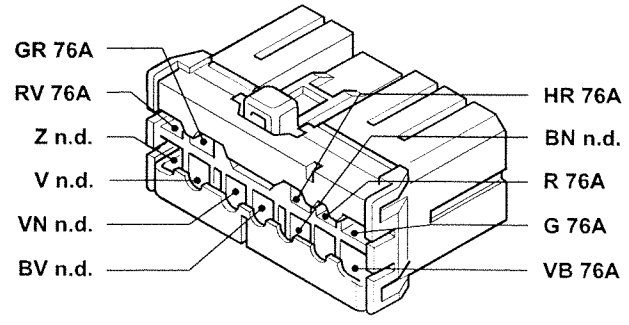

85D Infocenter control unit

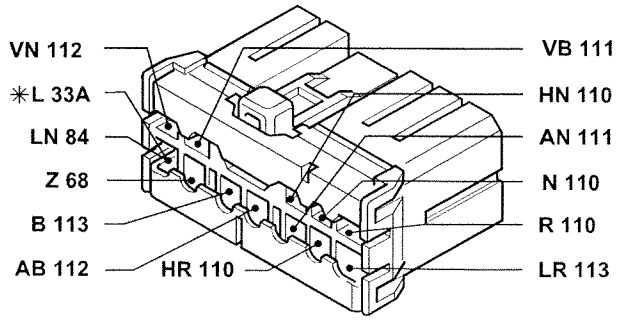

* Variant connection for Turbo Diesel versions

3U291I

P3U291I01

Copyright by Fiat Auto

55.

85E Infocenter control unit

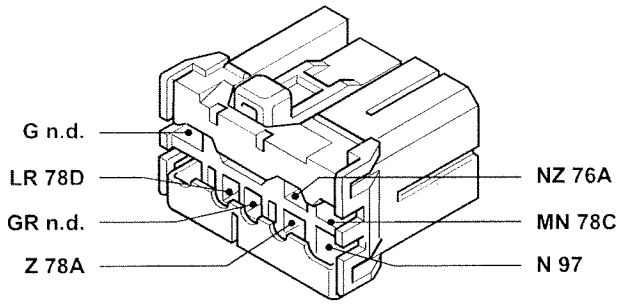

85F Infocenter control unit

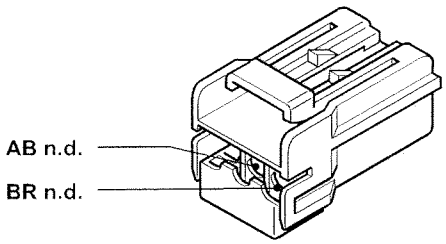

87 Light for glove compartment/controls for unlocking luggage compartment

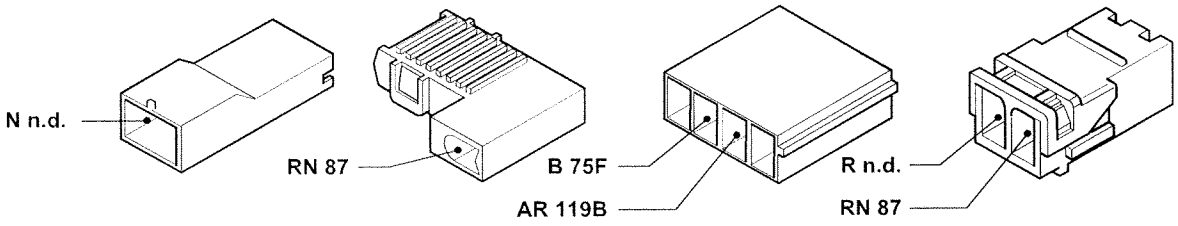

89 Left rear view mirror

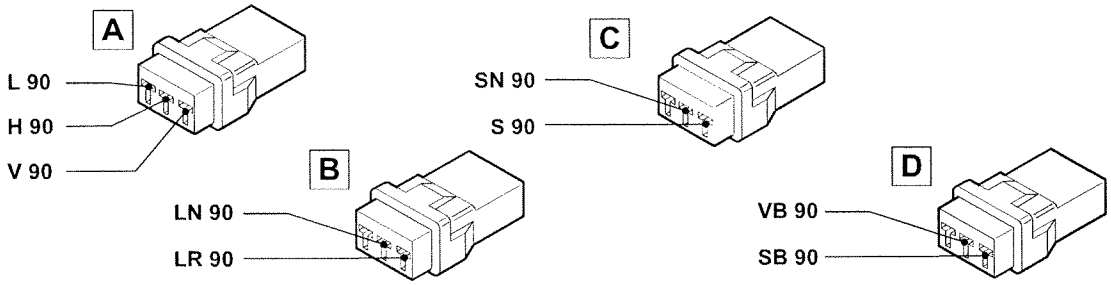

88 Diagnostic socket

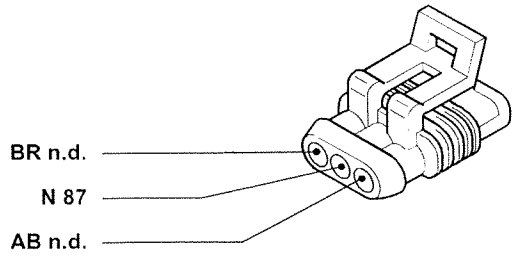

P3U292I01

3U292I

90 Connection between dashboard and left front door cables

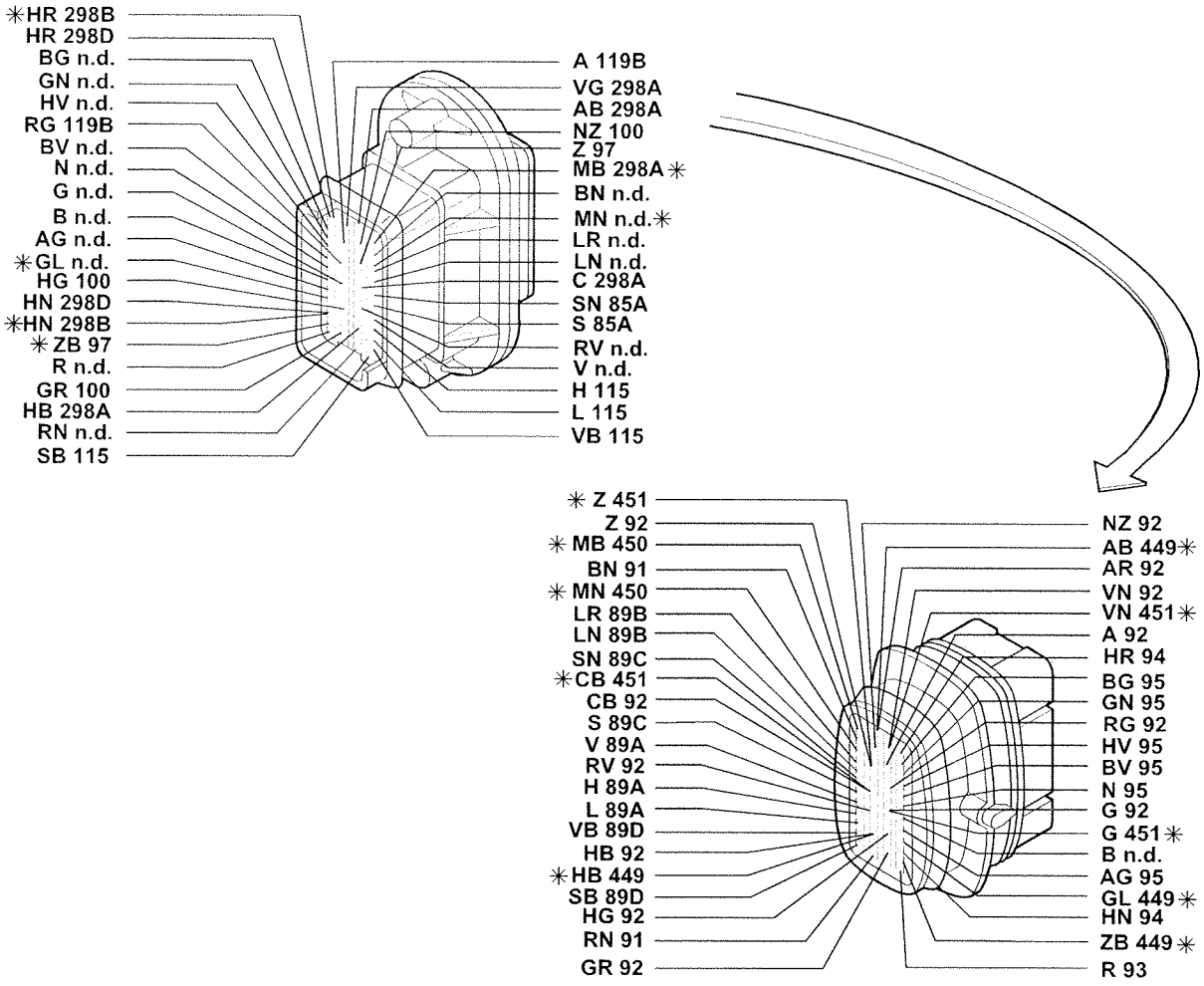

* Variant connection for COUPE' versions

91 Speaker in left front door

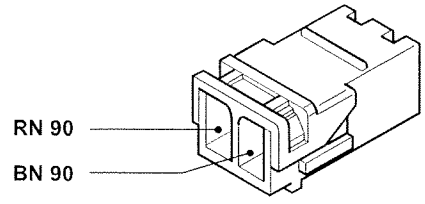

92 Front/rear electric windows control panel on left front door

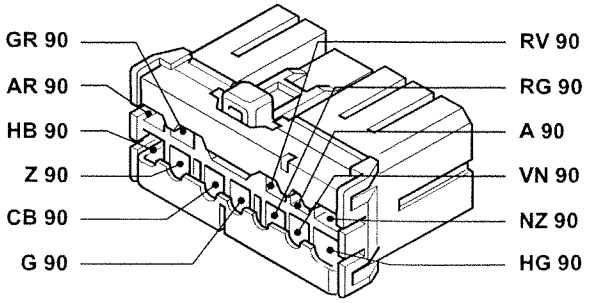

3U293I

P3U293I01

55.

93 Light in left front door

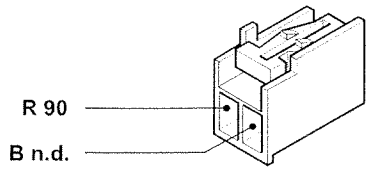

94 Left front electric window motor

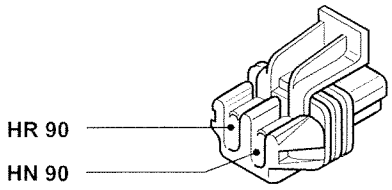

95 Left front central locking geared motor and signalling left front door open and alarm on

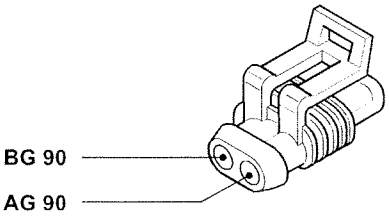

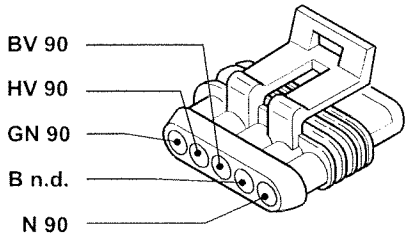

96 Earth on carrier

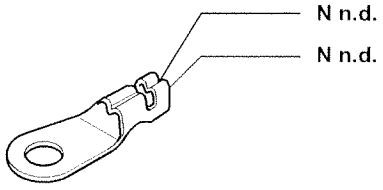

97 Earth on floor
(Only for COUPE' versions)

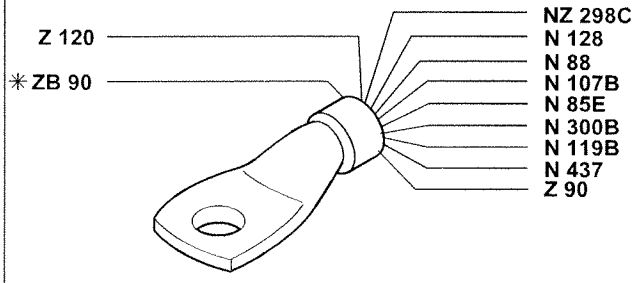

98 Ashtray light

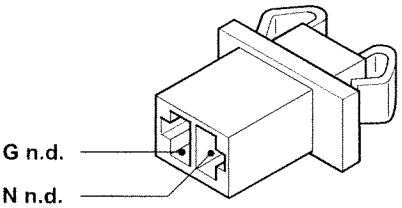

99 Cigar lighter

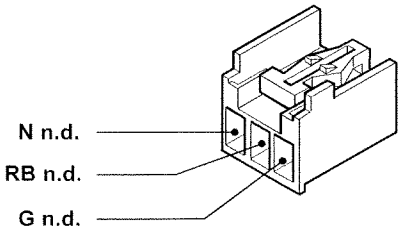

3U2941

P3U294101

100 Connection between dashboard and left longitudinal cables

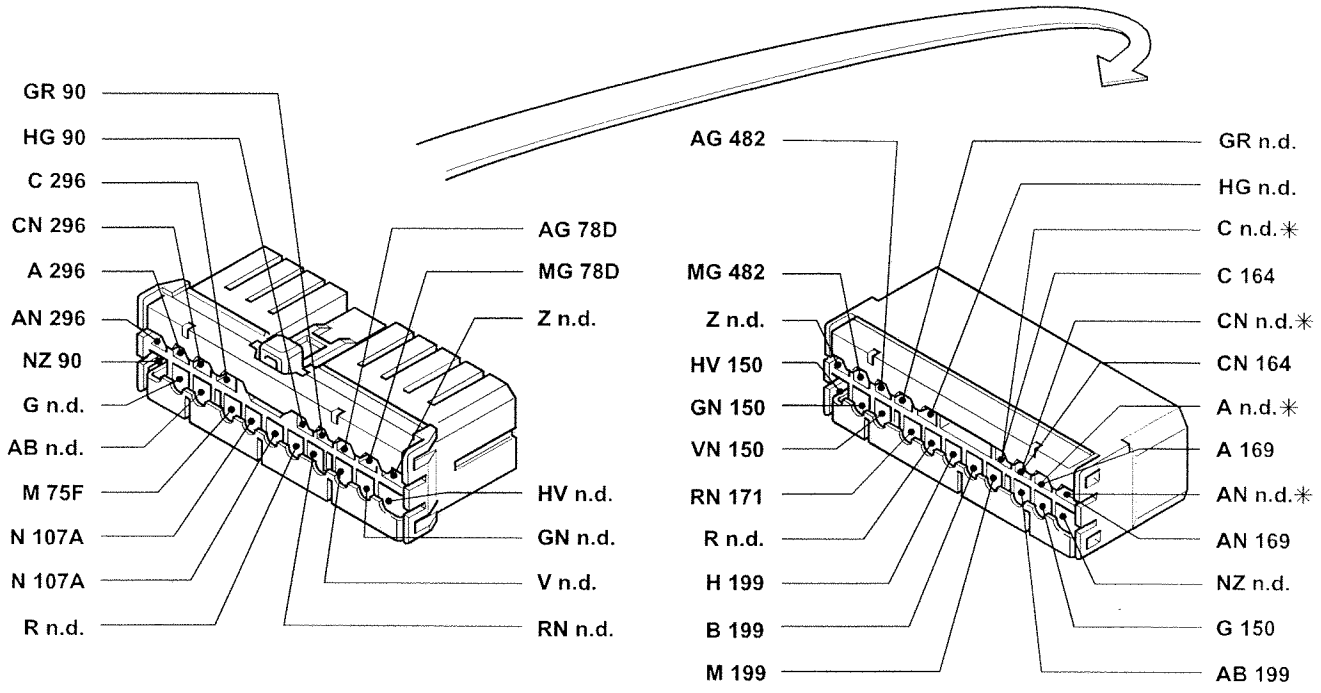

* Variant connection for Station Wagon versions

101 Light dimmer

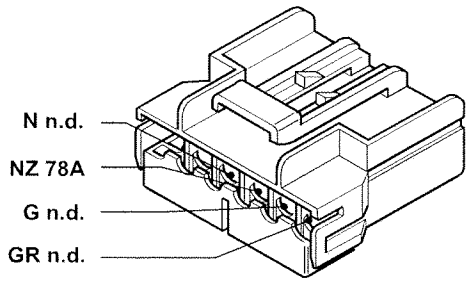

102 Exterior lights control unit

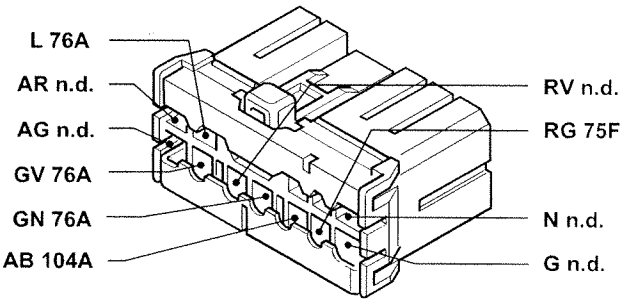

103 Switch control unit

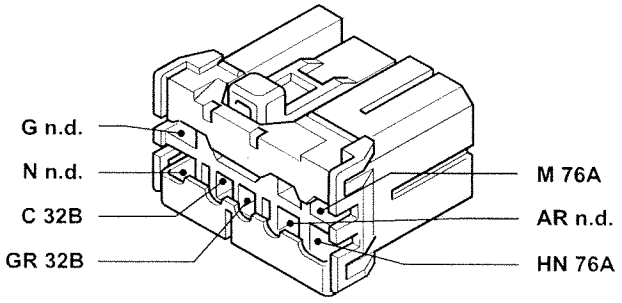

104A Control switch for windscreen washer/-headlamp washer

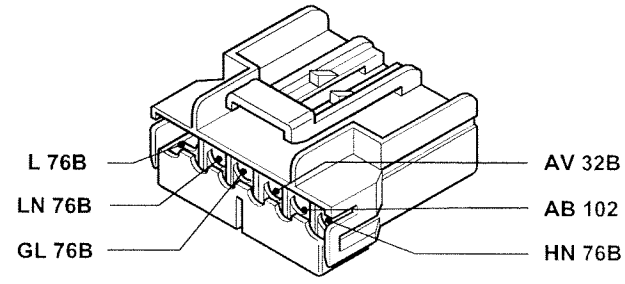

3U295I

P3U295I01

Copyright by Fiat Auto

55.

104B Windscreen wiper control switch

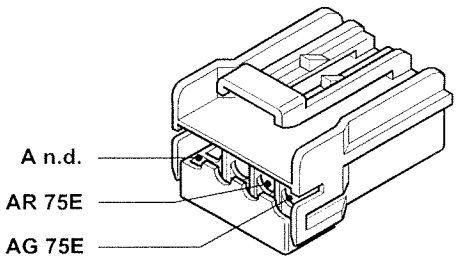

104C Horn control

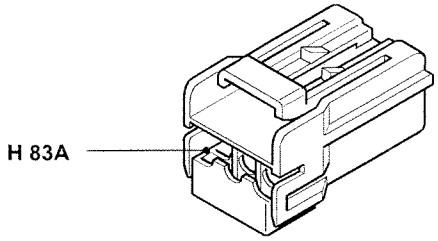

104D Switch for direction indicators/parking lights

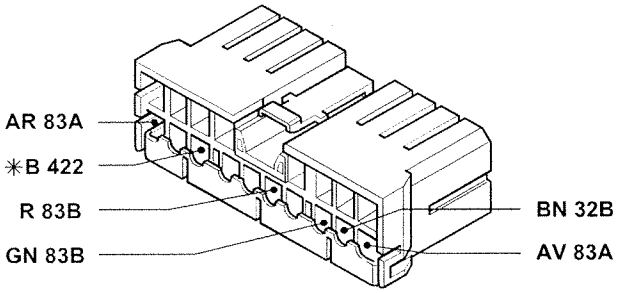

* Variant connection for Station Wagon versions

104E Main beam headlamps flasher button (Only on Station Wagon versions)

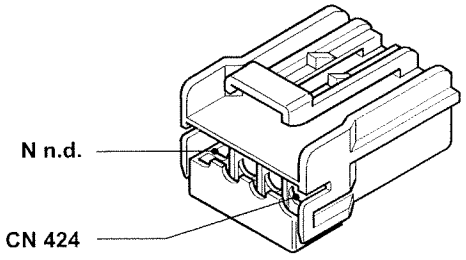

105 Ignition switch

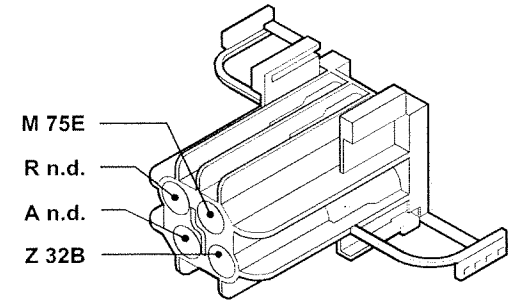

106 Aerial for Lancia CODE

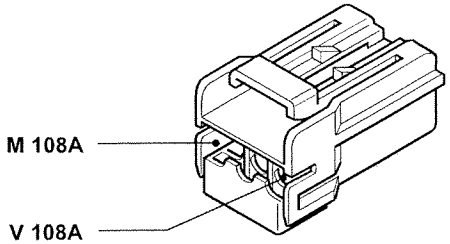

107A Alarm control unit

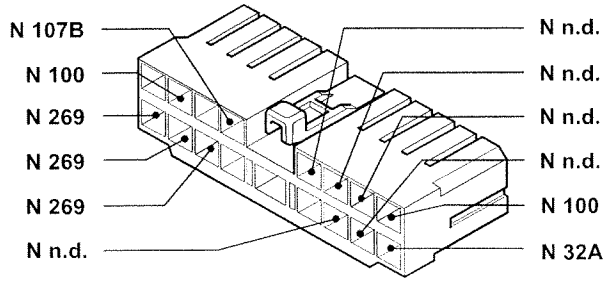

107B Alarm control unit

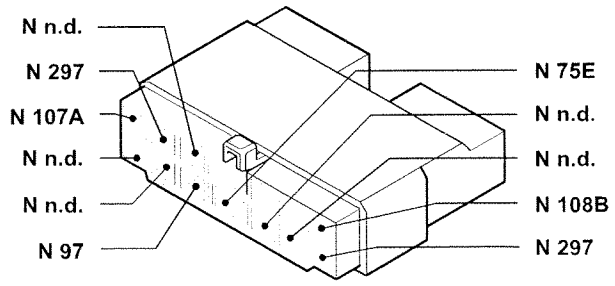

P3U296I01

3U296I

108 Lancia CODE control unit

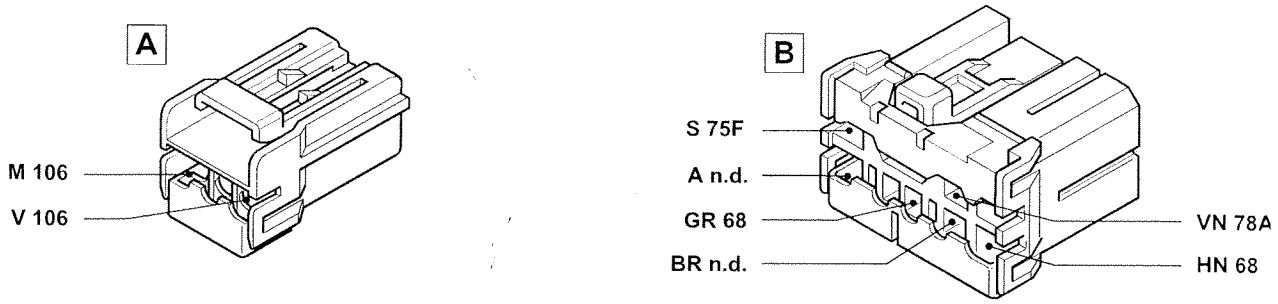

109D Distribution/mixture motor

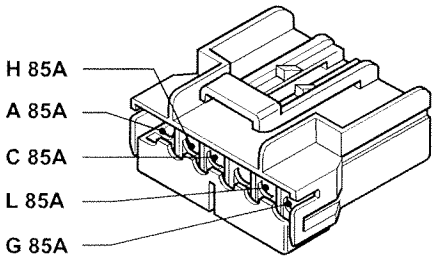

109M Distribution/mixture motor

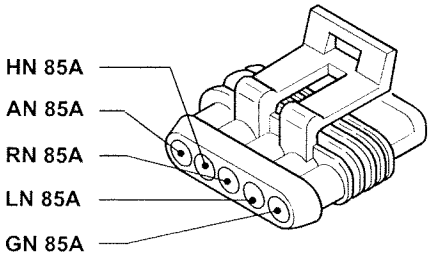

110 Vehicle interior air temperature sensor

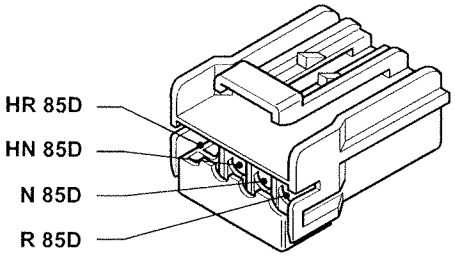

111 Mixed air sensor 1

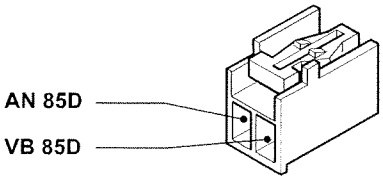

112 Mixed air sensor 2

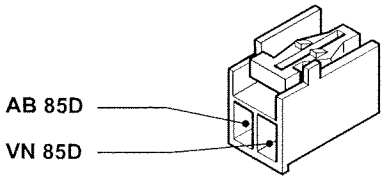

113 Solar temperature sensor

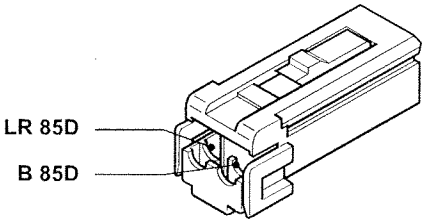

3U297I

P3U297I01

Copyright by Fiat Auto

114 Sensor on steering

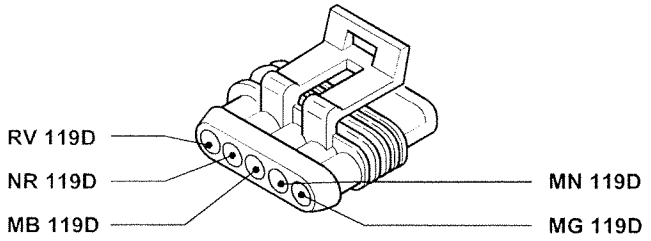

115 Control unit for electrically adjustable rear view mirrors

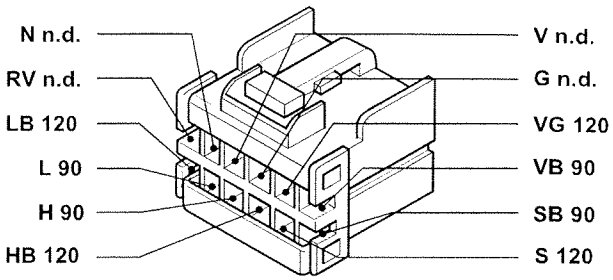

116 Electrically operated sun roof electronic control unit

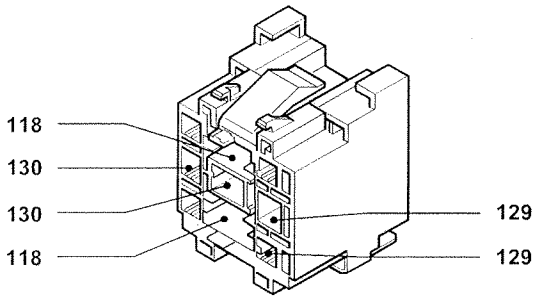

117 Switch signalling handbrake applied

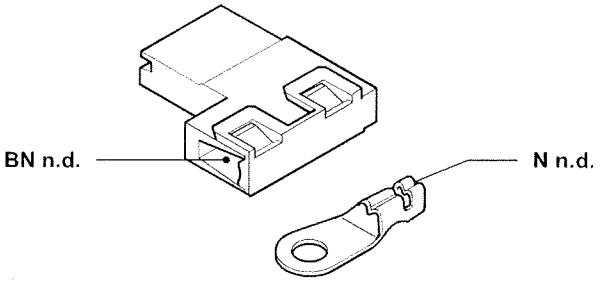

118 Electrically operated sun roof motor

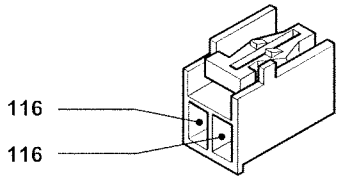

119A Connection between dashboard and right longitudinal cables

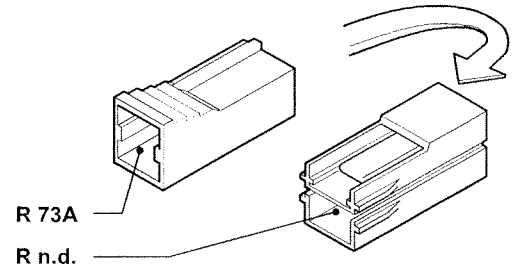

119C Connection between dashboard and right longitudinal cables

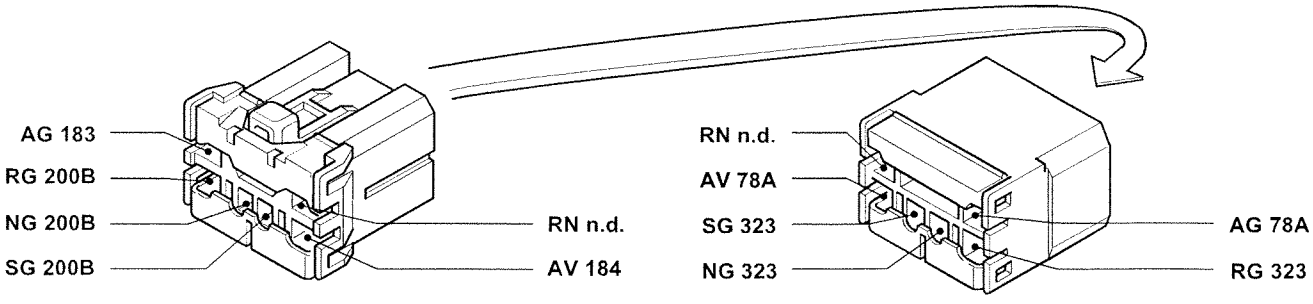

3U298I

P3U298I01

119B Connection between dashboard and right longitudinal cables

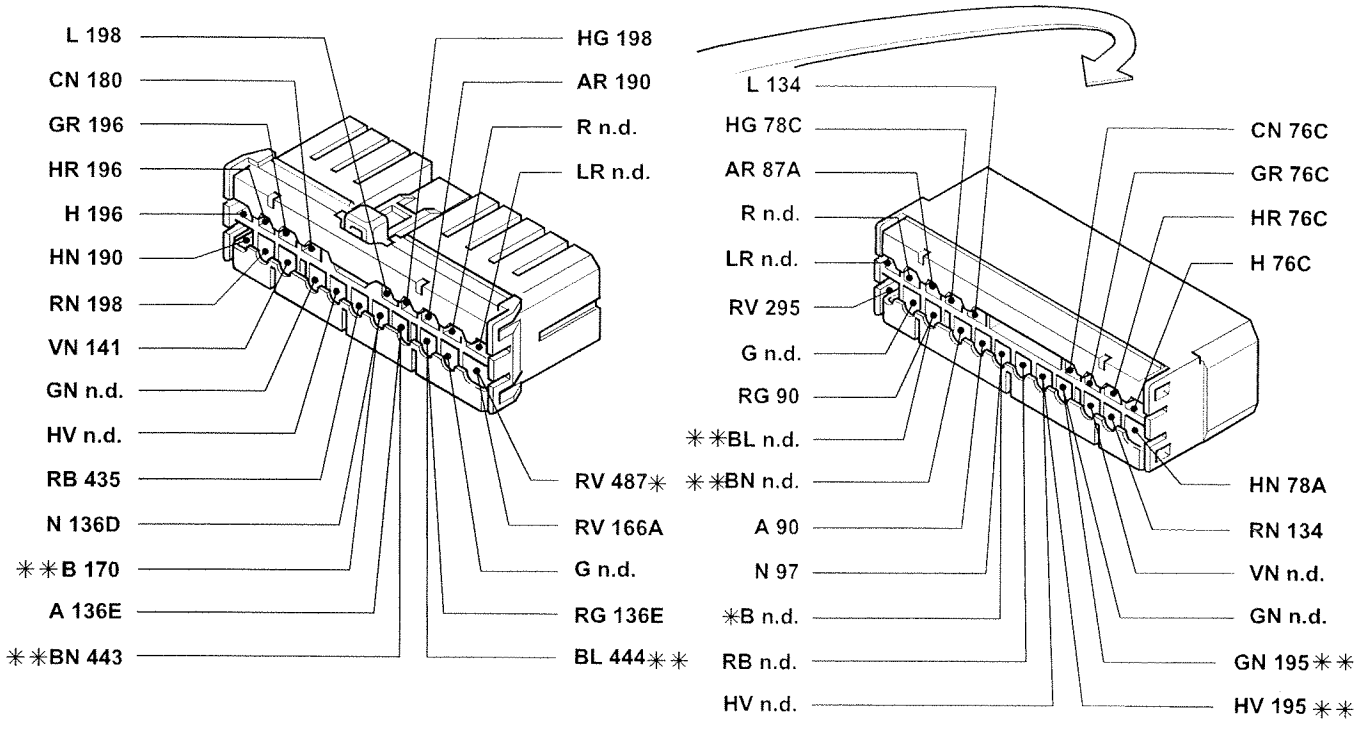

* Variant connection for Station Wagon versions

** Variant connection for COUPE' versions

119D Connection between dashboard and right longitudinal cables

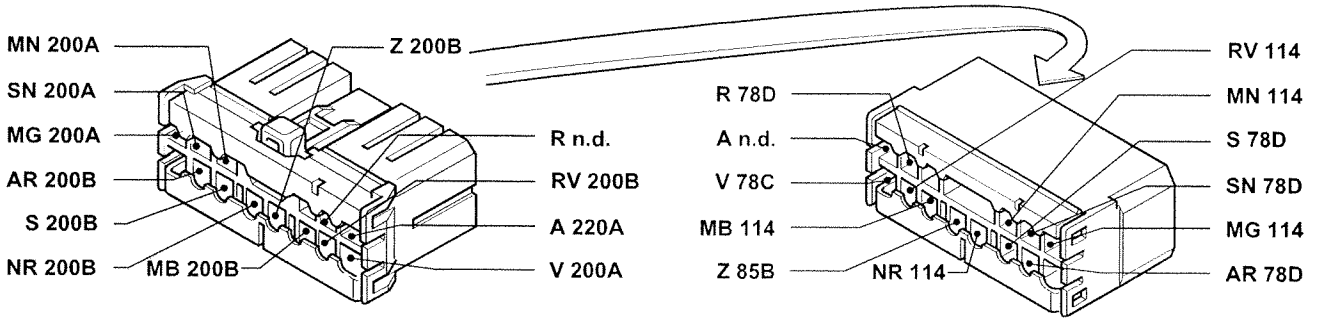

119E Connection between dashboard and right longitudinal cables

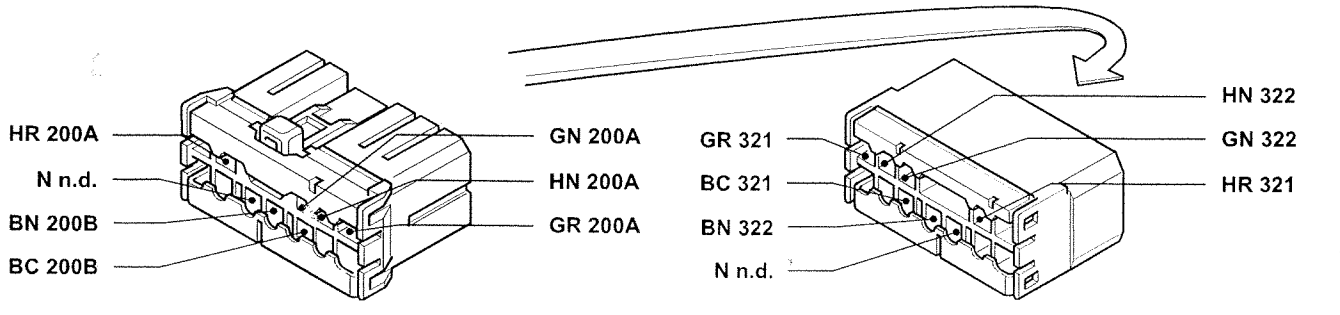

3U299I

P3U299I01

Copyright by Fiat Auto

120 Connection between dashboard and right front door cables

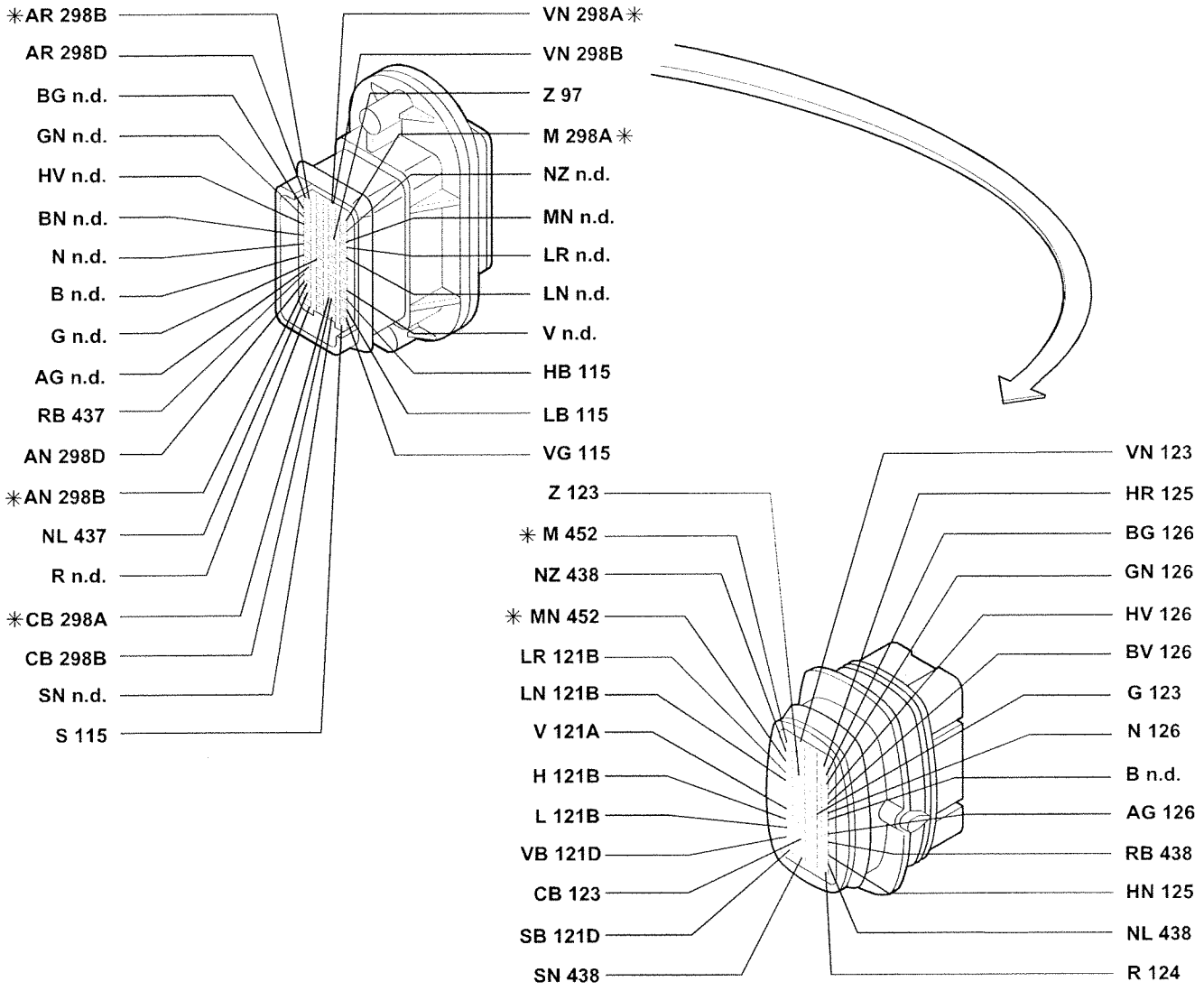

* Variant connection for COUPE' versions

121 Right rear view mirror

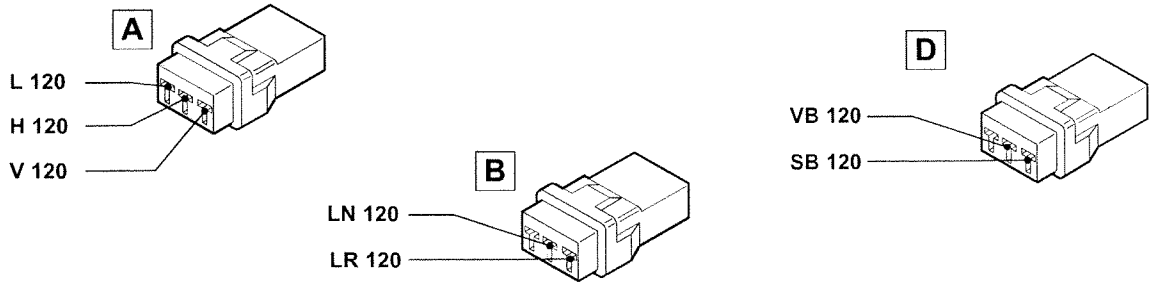

3U3001

P3U300101

123 Right front electric window control panel on left front door

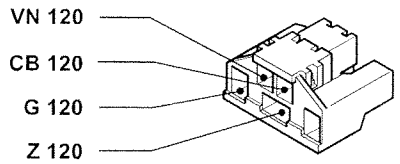

124 Light in right front door

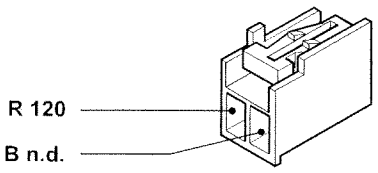

125 Right front electric window motor

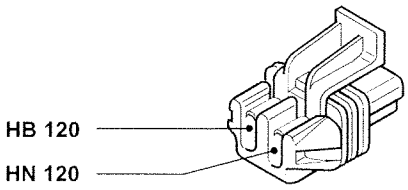

129 Electrically operated sun roof end of travel switch

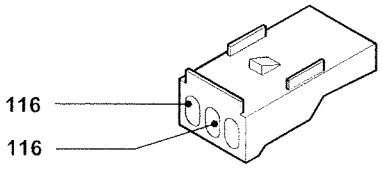

126 Right front central locking geared motor and signalling right front door open and alarm on

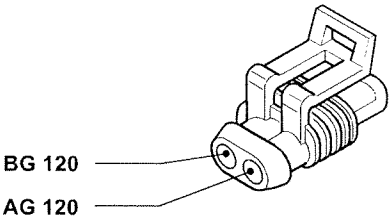

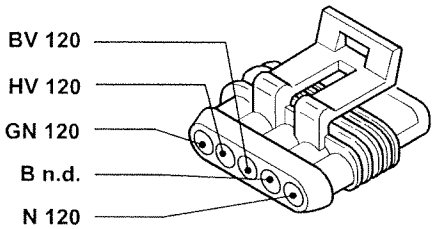

127 Switch signalling seat belts not fastened

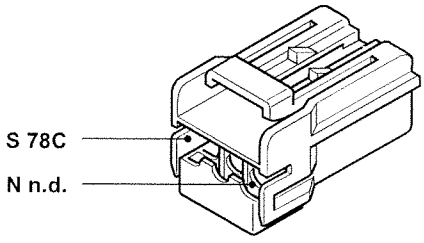

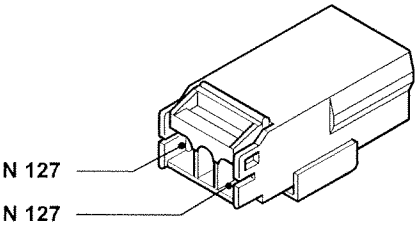

Copyright by Fiat Auto

55.

128 Timer for front courtesy light

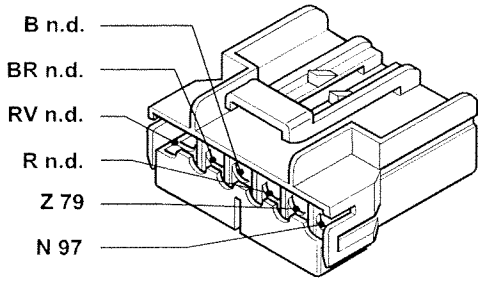

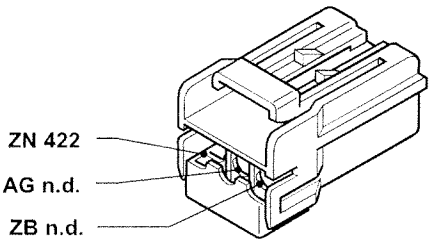

130 Electrically operated sun roof control button

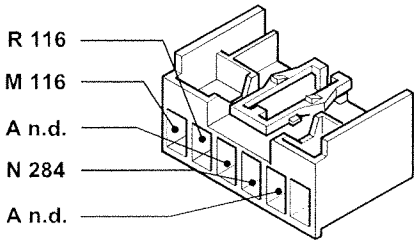

131 Earth on steering column support

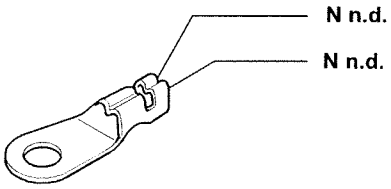

134 Servotronic solenoid valve

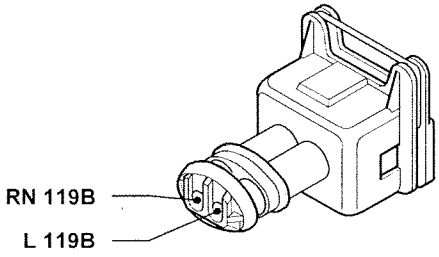

135 Earth on floor (for AIR-BAG signal)

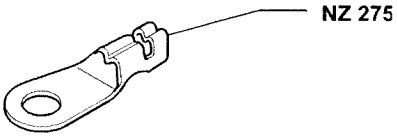

136A Rear electric windows control unit

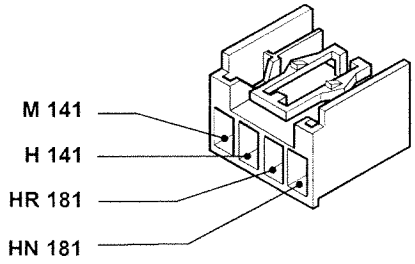

136B Rear electric windows control unit

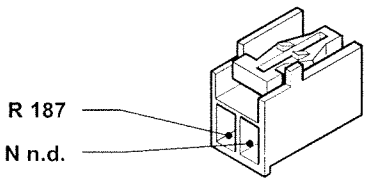

3U302I

P3U302I01

136C Rear electric windows control unit

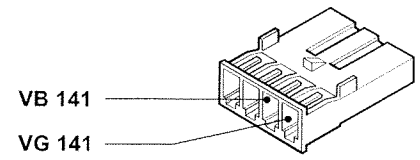

136D Rear electric windows control unit

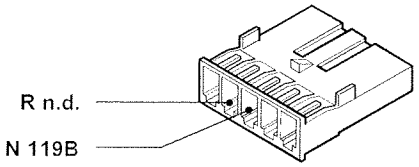

136E Rear electric windows control unit

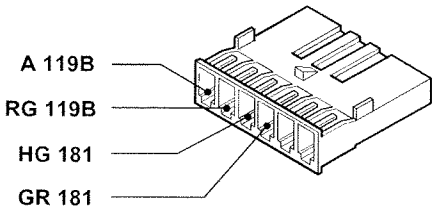

138 Electronic control unit for driver's electrically adjustable seat with memory

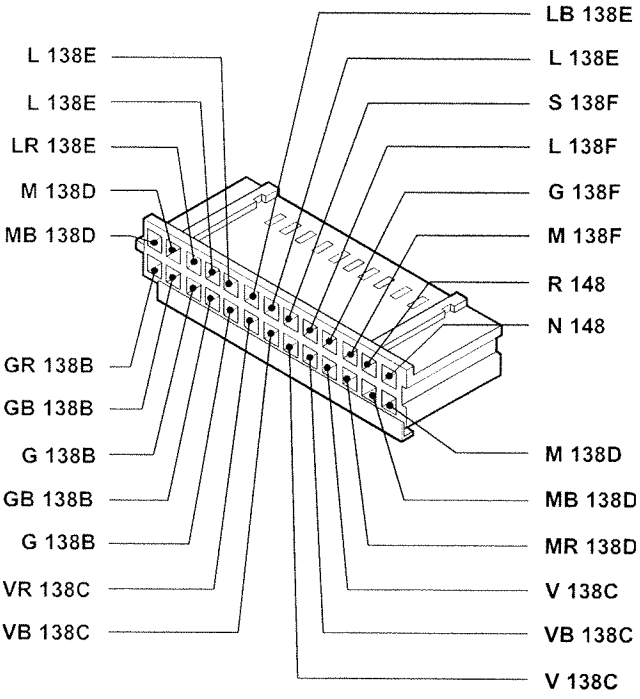

138B Driver's seat backrest adjustment motor

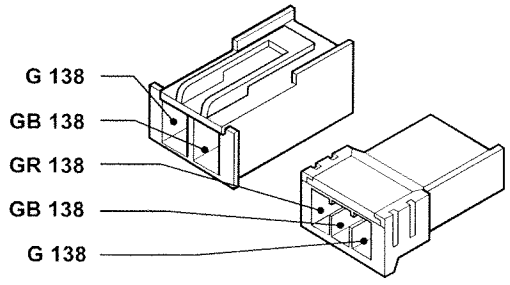

138C Driver's seat height adjustment motor

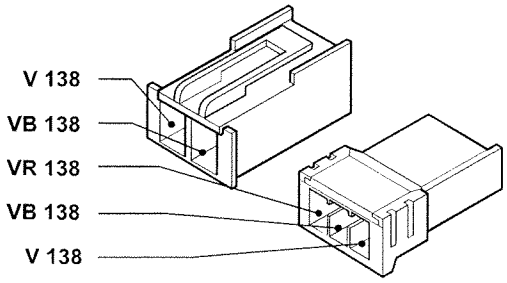

138D Driver's seat height adjustment motor

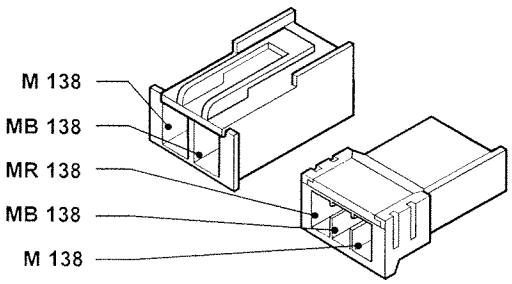

3U303I

P3U303I01

Copyright by Fiat Auto

138E Driver's seat sliding adjustment motor

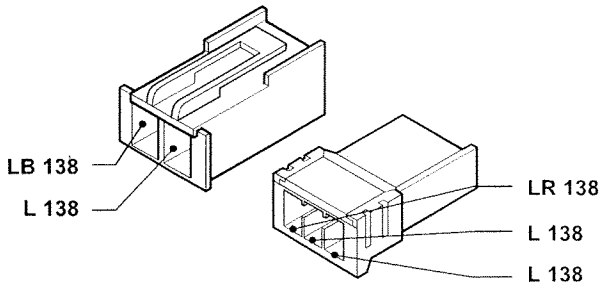

138F Control panel for programming driver's seat

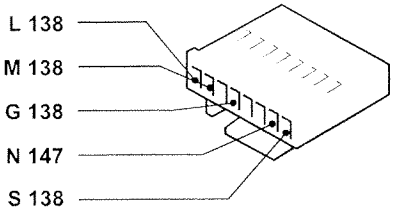

139 Driver's side seat heated pad

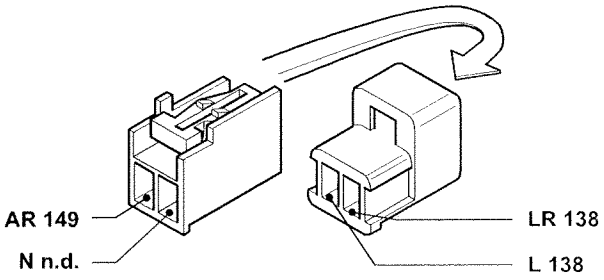

140 Switch for driver's side seat heated pad

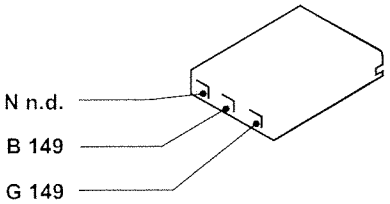

141 Connection between right longitudinal and right rear door cables

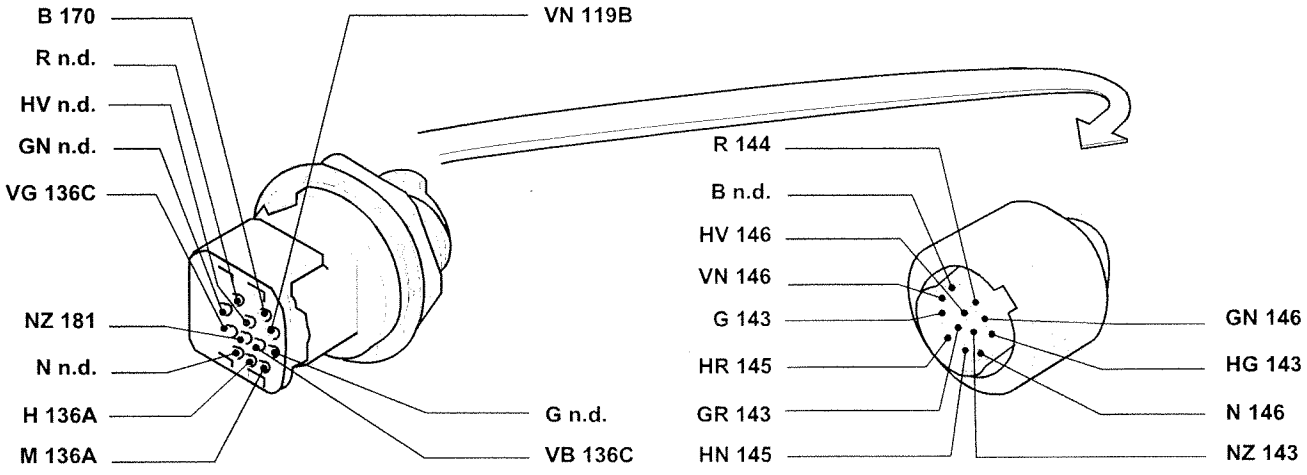

3U304I

P3U304I01

143 Right rear electric window control on right rear door

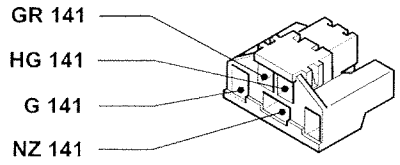

144 Light in right rear door

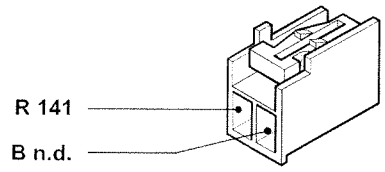

145 Right rear electric window motor

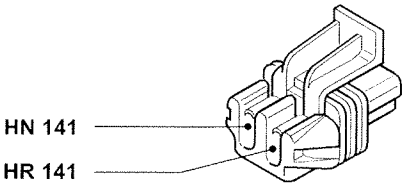

146 Right rear door central locking geared motor and signalling right rear door open and alarm on

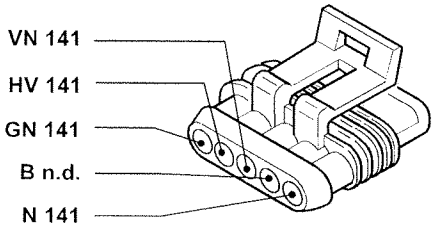

147 Connection for left front seat cables

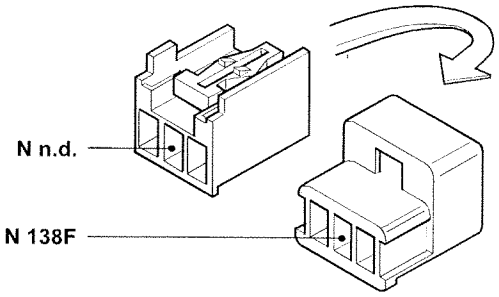

148 Connection between left longitudinal and left seat cables

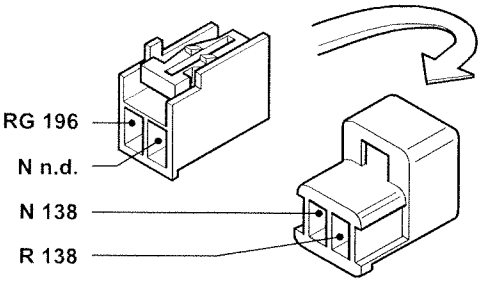

149 Connection between left longitudinal and left seat cables

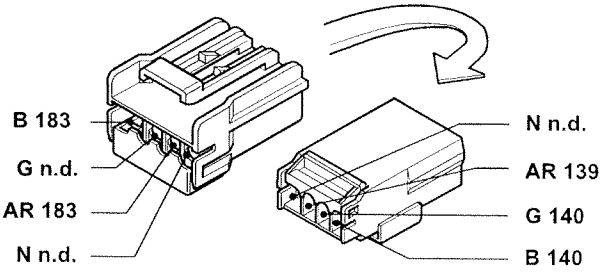

151 Amplifier for radio

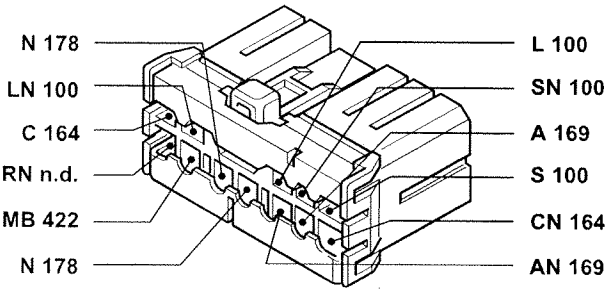

3U305I

P3U305I01

Copyright by Fiat Auto

55.

150 Connection between left longitudinal and left rear door caables

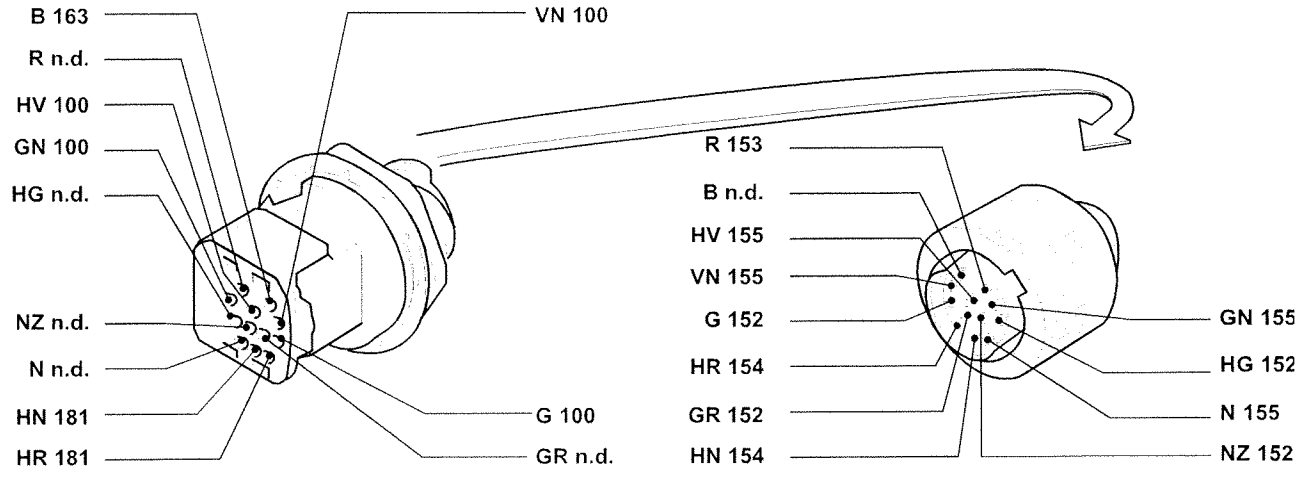

152 Left rear electric window control on left rear door

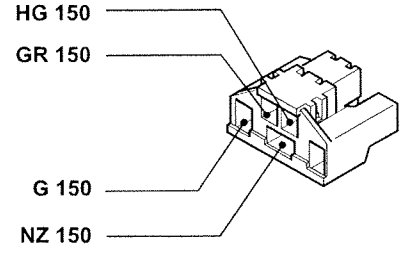

153 Light in left rear door

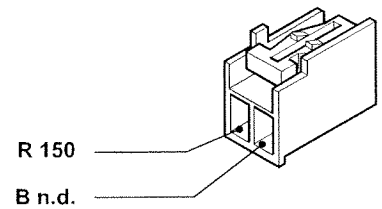

154 Left rear electric window motor

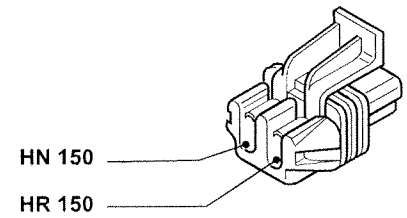

155 Left rear door central locking geared motor and signalling left rear door open and alarm on

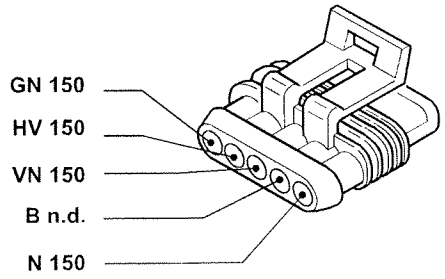

P3U306I01

3U306I

156 Connection between right longitudinal and right seat cables

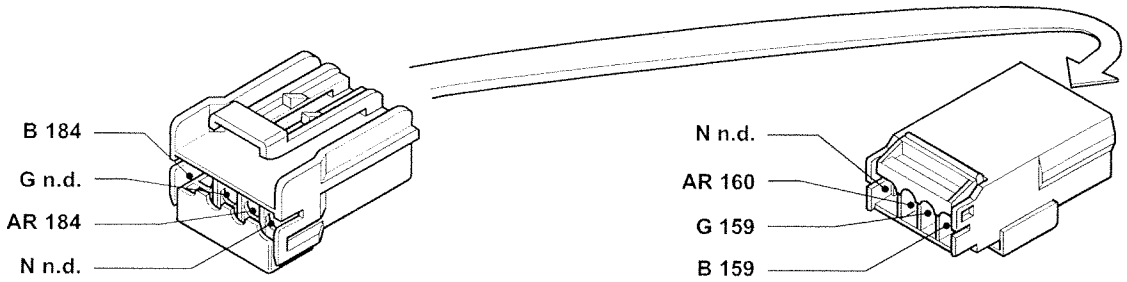

157 Connection between right longitudinal and right seat cables

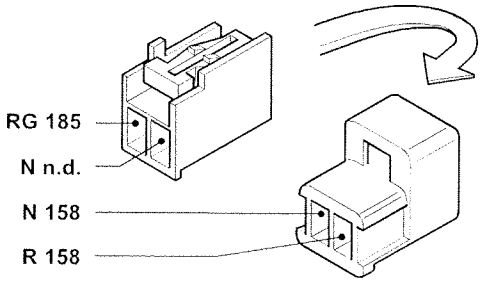

158A Passenger seat sliding adjustment motor

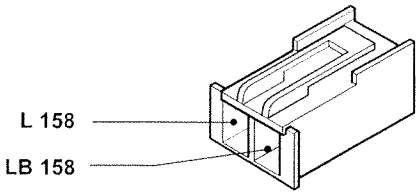

158B Passenger seat height adjustment motor

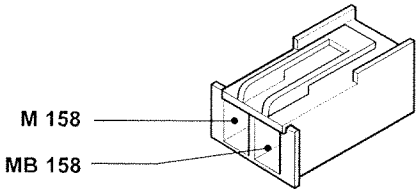

158C Passenger seat height adjustment motor

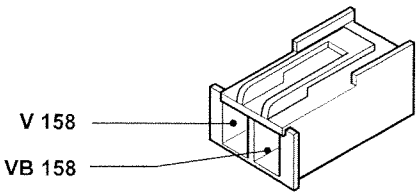

158D Passenger seat backrest adjustment motor

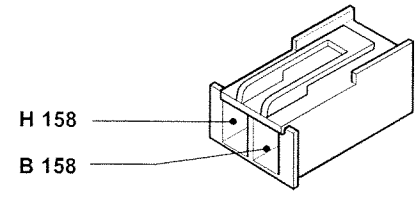

159 Switch for passenger seat heater pad

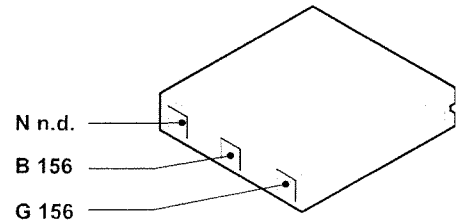

3U307I

P3U307I01

Copyright by Fiat Auto

55.

160 Passenger seat heater pad

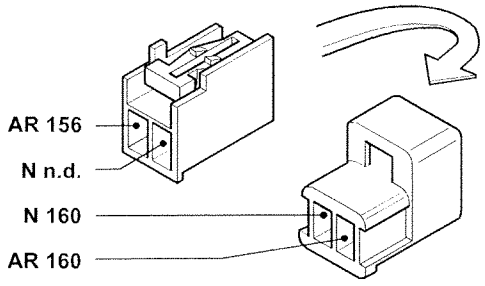

162 Luggage compartment courtesy light

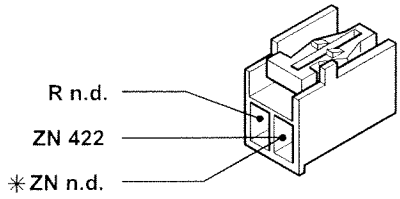

* Variant connection for Station Wagon versions

163 Left rear courtesy light

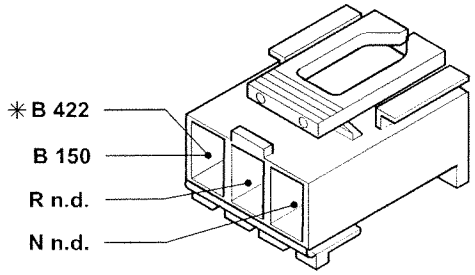

* Variant connection for COUPE' versions

164 Left rear speaker
(Only for Station Wagon versions)

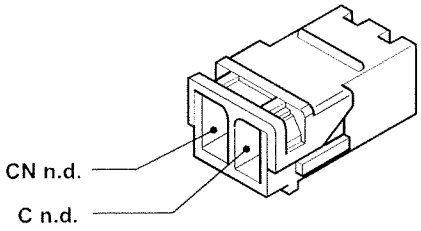

164 Left rear speaker

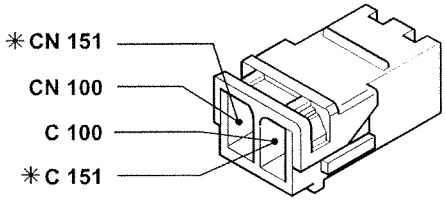

* Variant connection for versions with Compact-Disc

165 Heated rear windscreen

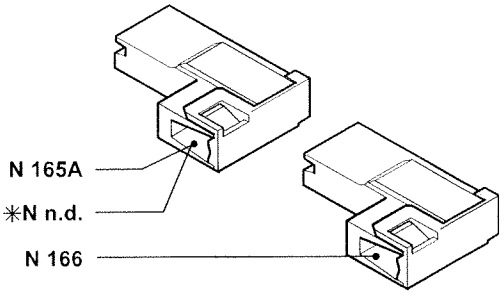

* Variant connection for Station Wagon versions

165A Earth for heated rear windscreen

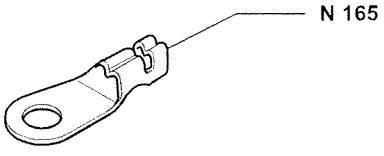

166 Amplifier for aerial in rearscreen

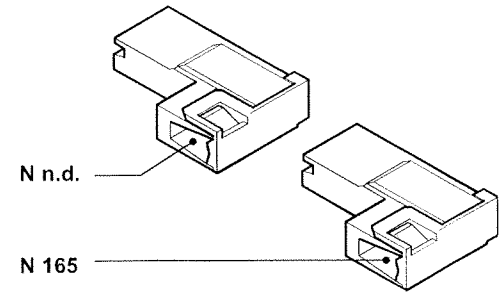

P3U308I01

3U308I

166A Rear cables connection in rearscreen

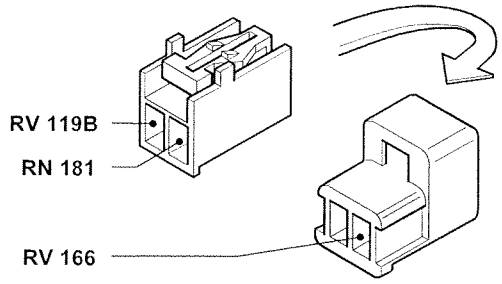

169 Right rear speaker

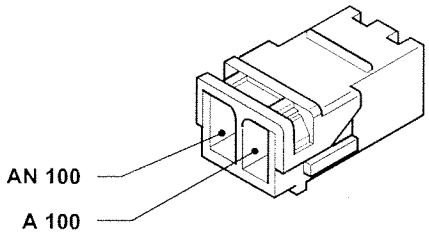

169 Right rear speaker
(Only for versions with Compact-Disc)

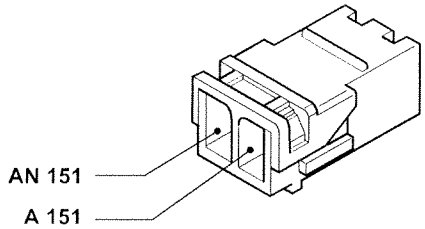

169 Right rear speaker
(Only for Station Wagon versions)

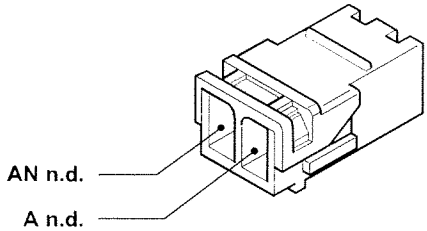

170 Right rear courtesy light

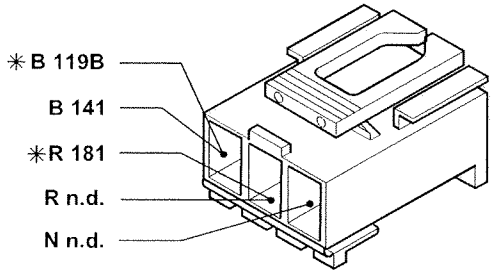

* Variant connection for COUPE' versions

171 Additional brake lights warning light

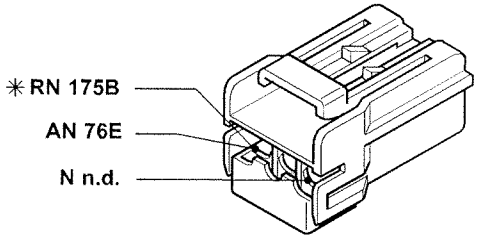

* Variant connection for Station Wagon versions

172 Right rear light cluster on fixed section

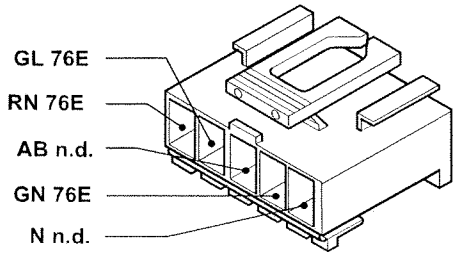

173 Right rear earth

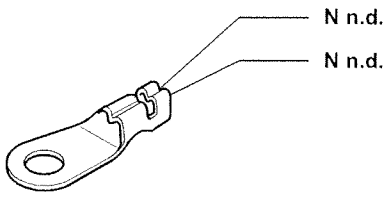

3U309I

P3U309I01

Copyright by Fiat Auto

55.

175 Connection between left longitudinal and tailgate cables (Only for Station Wagon versions)

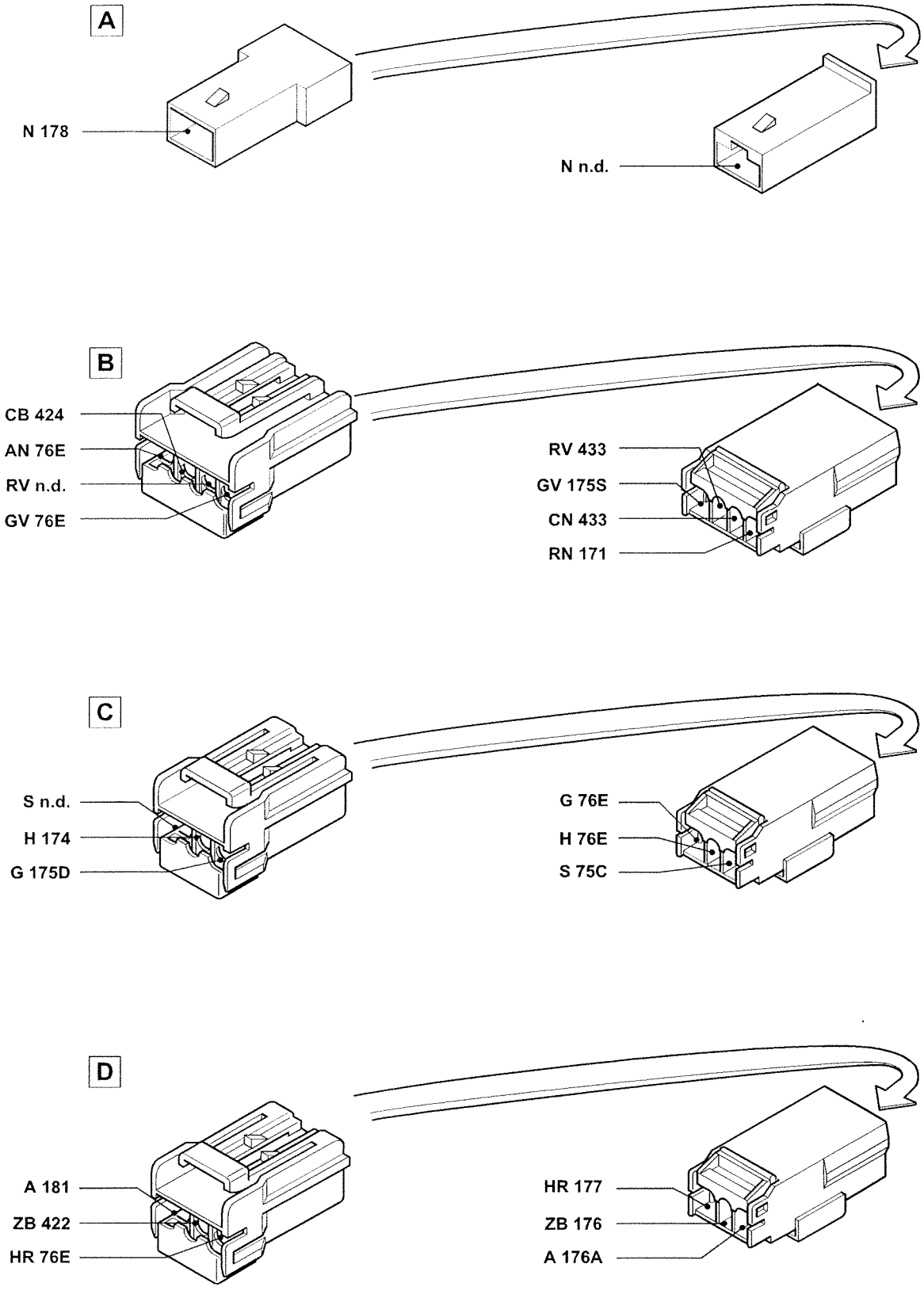

3U310I

P3U310I01

174 Right rear light cluster on moveable section

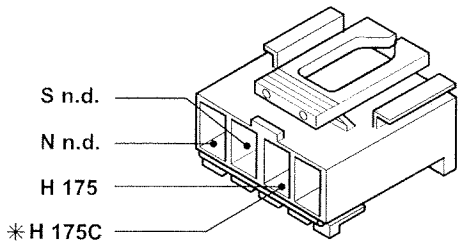

* Variant connection for Station Wagon versions

175S Left no. plate light

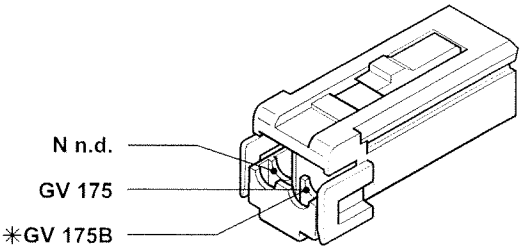

* Variant connection for Station Wagon versions

175 Connection between left longitudinal and tailgate cables

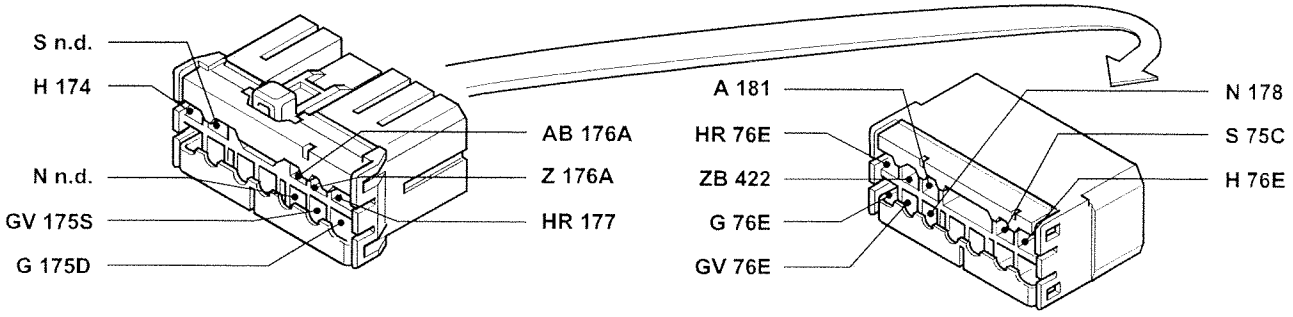

175D Right no. plate light

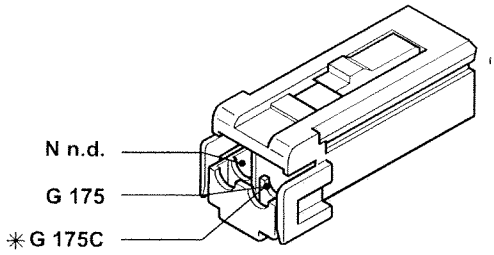

* Variant connection for Station Wagon versions

176 Geared motor for locking/unlocking luggage compartment tailgate

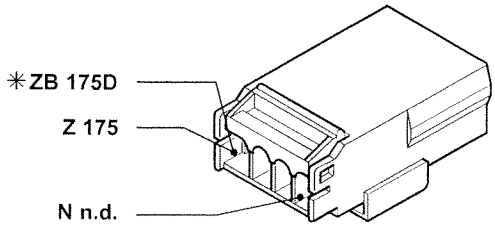

* Variant connection for COUPE' versions

176A Geared motor for locking/unlocking luggage compartment tailgate

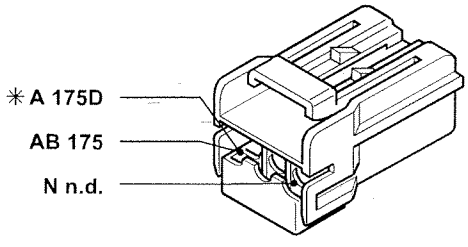

* Variant connection for Station Wagon versions

177 Left rear light cluster on moveable section

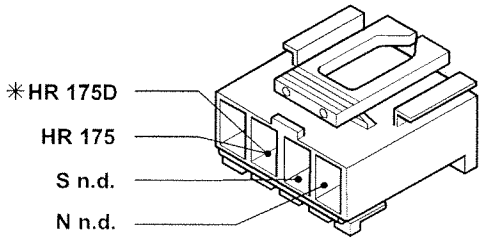

* Variant connection for Station Wagon versions

Copyright by Fiat Auto

178 Left rear earth

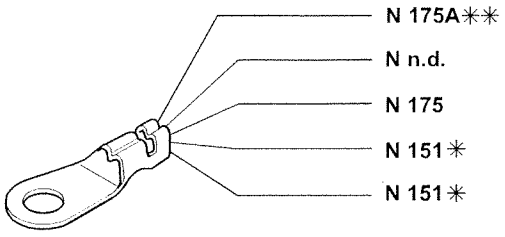

* Variant connection for versions with Compact-Disc
** Variant connection for Station Wagon versions

179 Left rear light cluster on fixed section

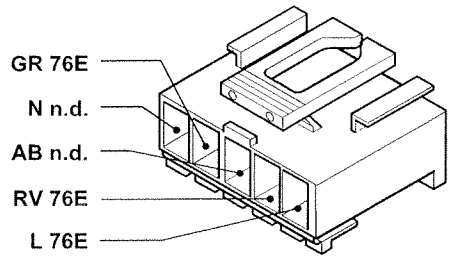

180 Heated rear windscreen relay feed

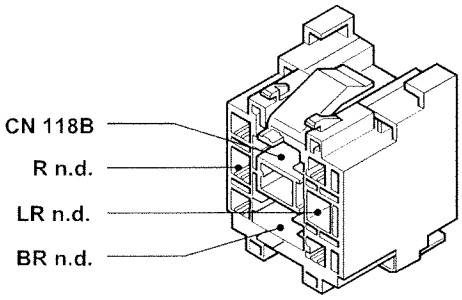

183 Relay for driver's seat heater pad

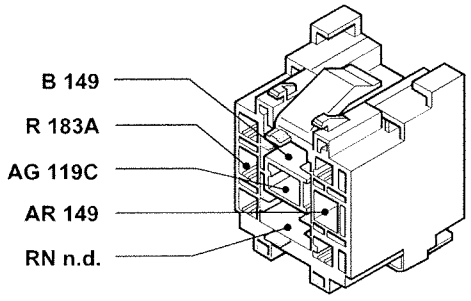

181 Connection between left longitudinal and right longitudinal cables

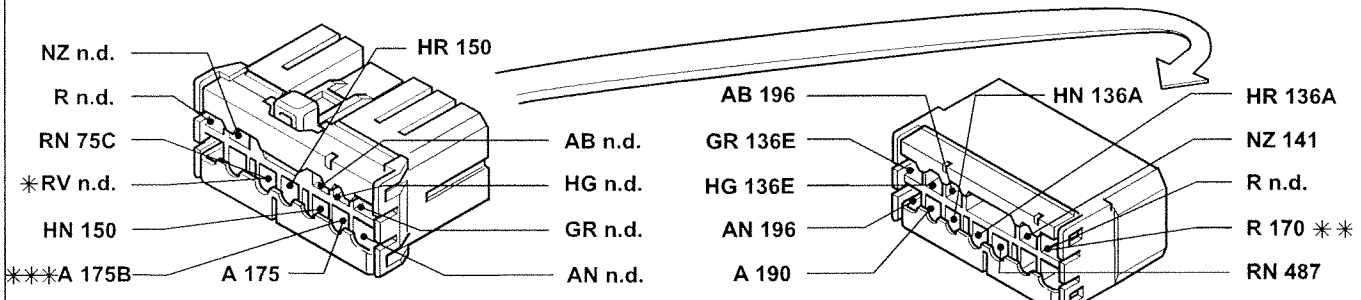

* Variant connection for versions with top of the range radio
** Variant connection for COUPE' versions
*** Variant connection for Station Wagon versions

183A 7.5A fuse protecting driver's heated pad relay

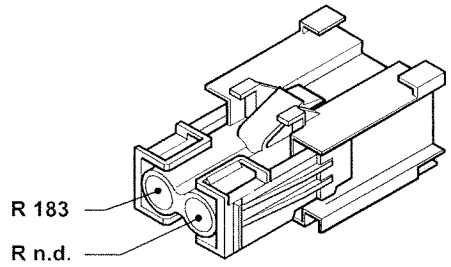

184 Relay for passenger seat heater pad

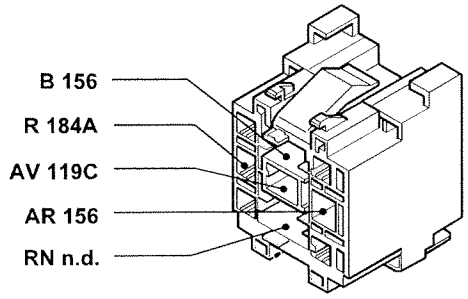

P3U312I01

3U312I

184A 7.5A fuse protecting passenger seat heater pad relay

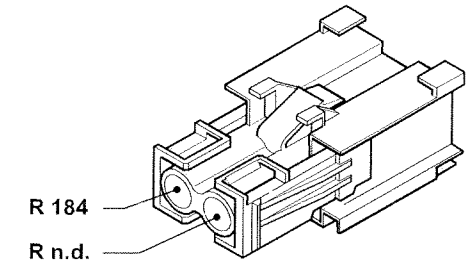

185 Relay for electrically adjustable driver's seat

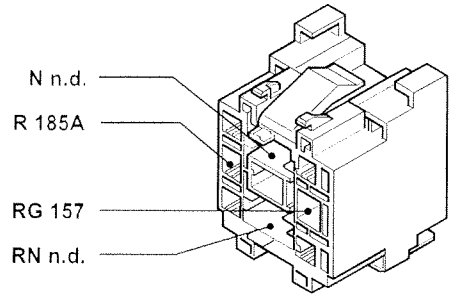

185A 30A fuse protecting electrically adjustable passenger seat

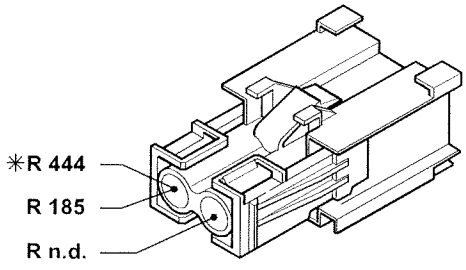

* Variant connection for COUPE' versions

186 Relay for electrically adjustable passenger seat

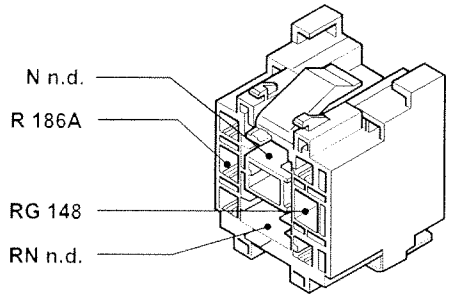

186A 30A fuse protecting electrically adjustable driver's seat

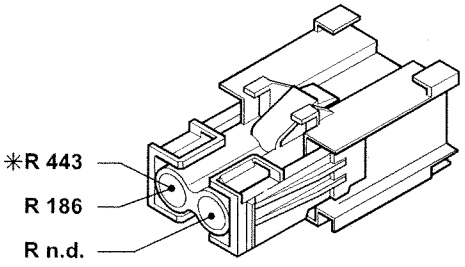

* Variant connection for COUPE' version

187 25A fuse protecting electric rear windows control unit

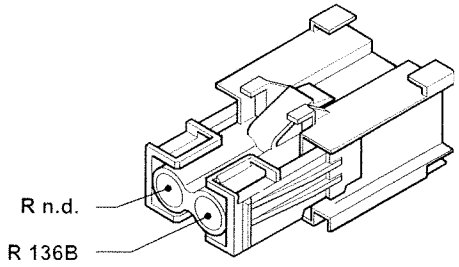

188 25A fuse protecting boot release electro--magnet

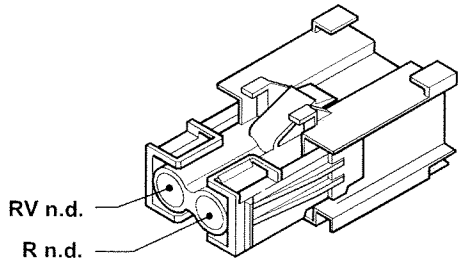

189 30A fuse protecting heated rear wind-screen

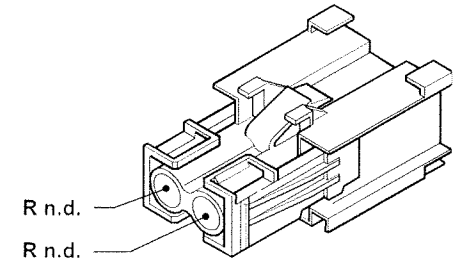

3U313I

P3U313I01

Copyright by Fiat Auto

190 Relay for locking / unlocking luggage compartment tailgate

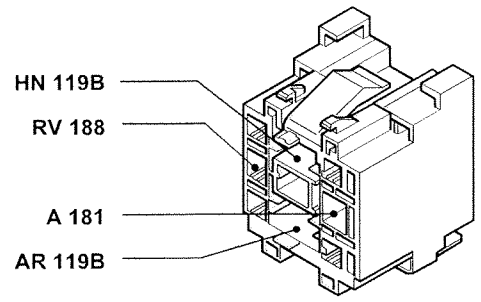

191 Earth for inertia switch

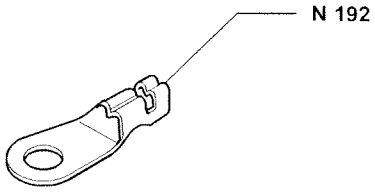

192 Inertia switch

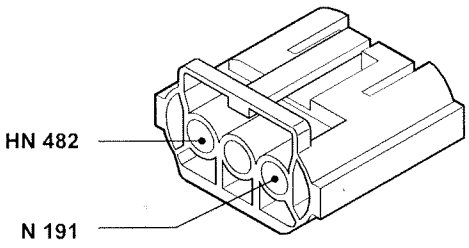

192 Inertia switch

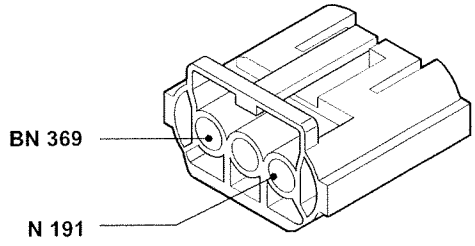

193(*) Sensor on left rear wheel (A.B.S.)

193A Connection for A.B.S. sensor cable on left rear wheel

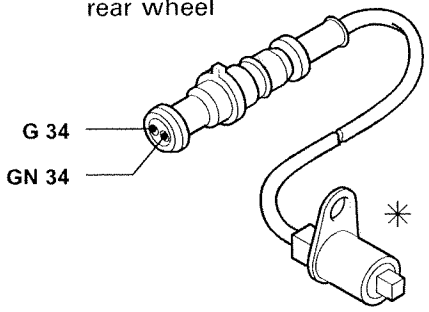

194(*) Sensor on right rear wheel (A.B.S.)

194A Connection for A.B.S. sensor cable on right rear wheel

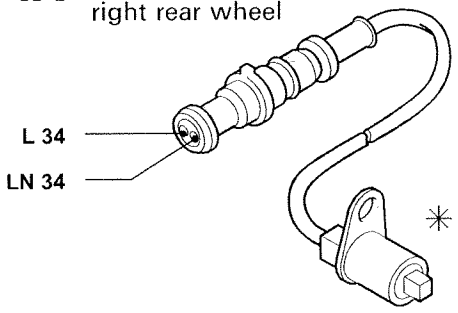

195 Fuel filler flap release motor

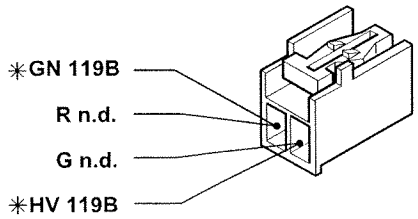

* Variant connection for COUPE' versions

196 Preparation for trailer

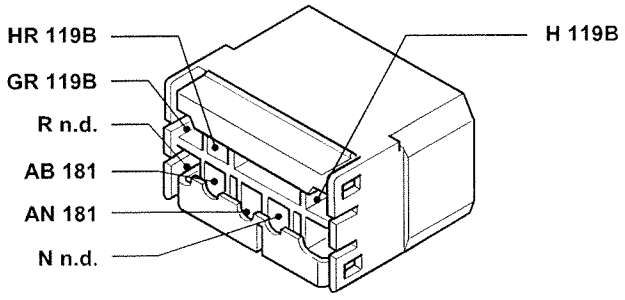

P3U314I01

3U314I

198 Servotronic device electronic control unit

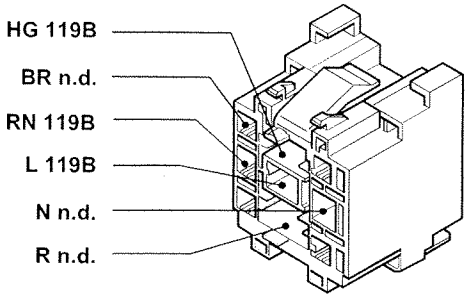

198A Diagnostic socket

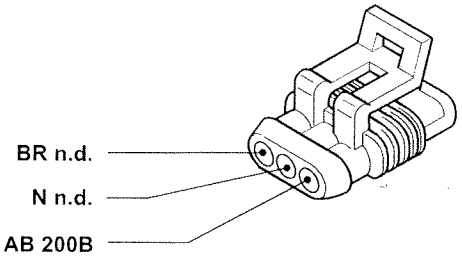

199 Anti-theft device alarm

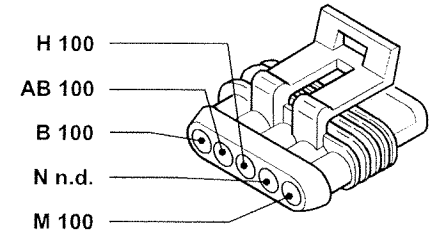

219 Earth on centre tunnel

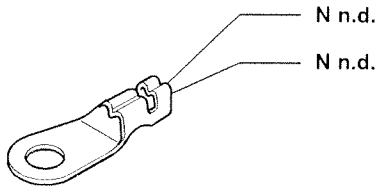

200 Controlled damping suspension electronic control unit (S.C.S.)

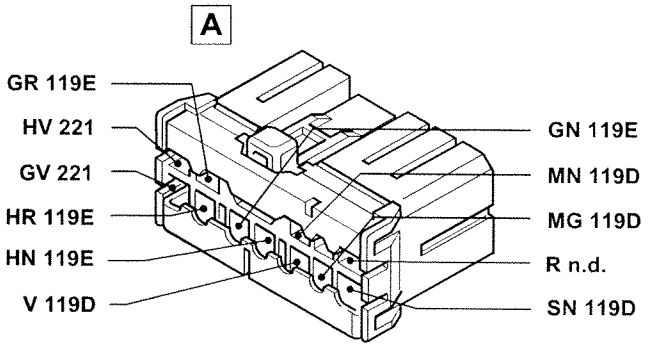

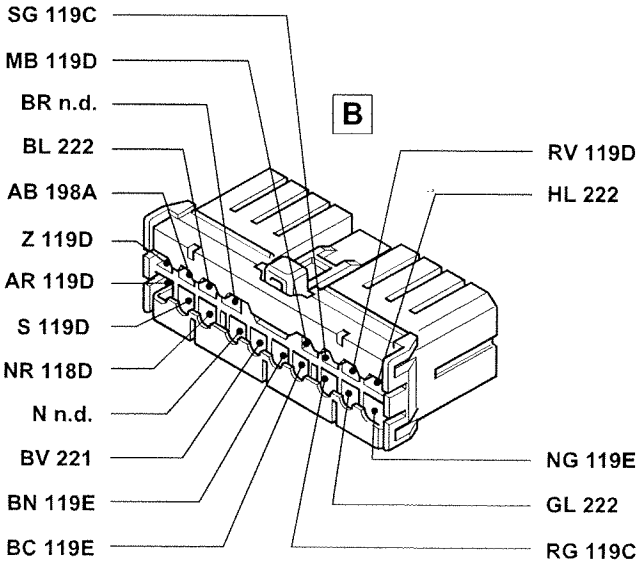

220A 7.5A fuse protecting S.C.S. system

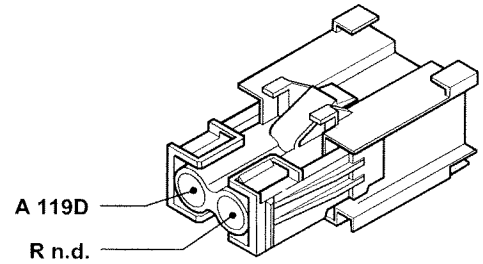

3U315I

P3U315I01

Copyright by Fiat Auto

221 Motor for left rear controlled damping suspension (S.C.S.)

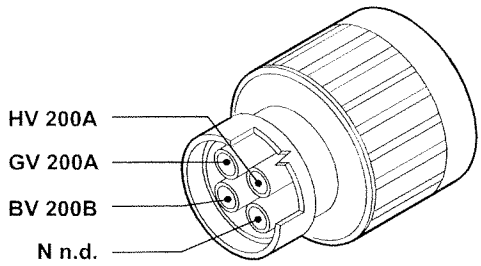

222 Motor for right rear controlled damping suspension (S.C.S.)

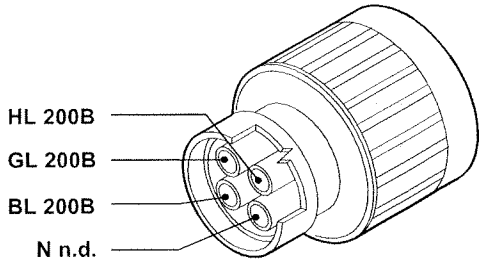

225 Left floor light

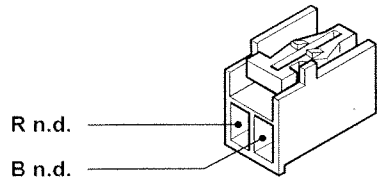

226 Right floor light

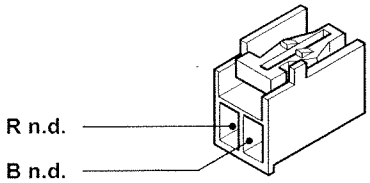

227 Right front speaker

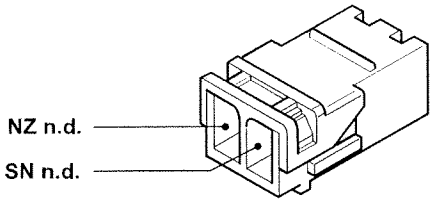

228 Left front speaker

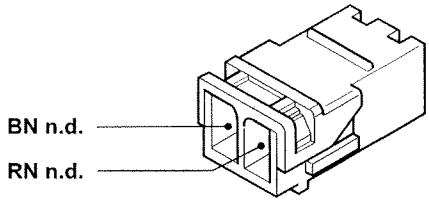

266 Infra red receiver for alarm device

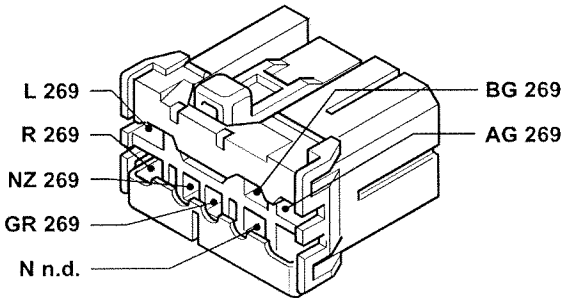

267 Volumetric sensors for alarm device

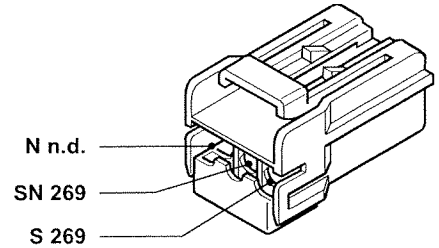

P3U316I01

3U316I

269 Connection between dashboard and receiver cables

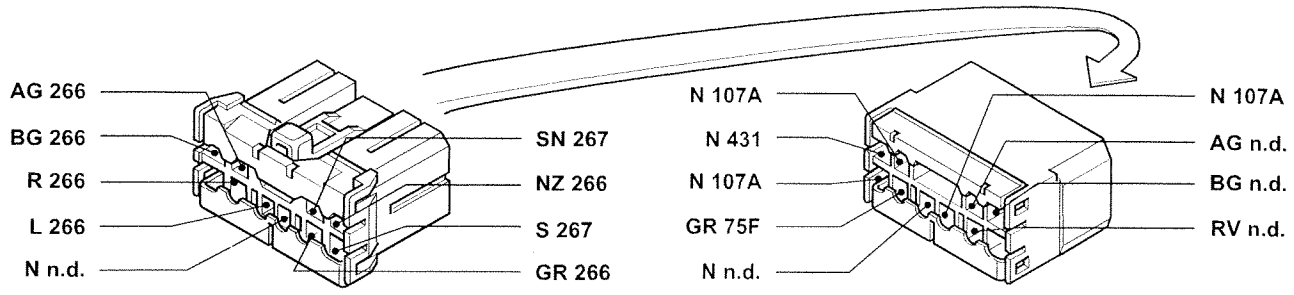

271 Brake lights switch

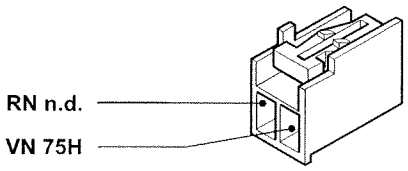

272 Driver's AIR-BAG connection

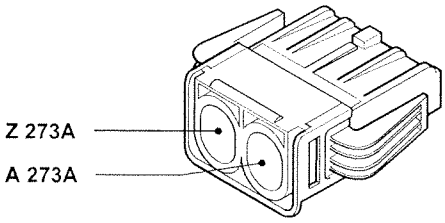

273 Passenger AIR-BAG connection

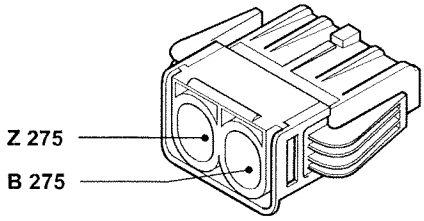

273A Passenger AIR-BAG connection

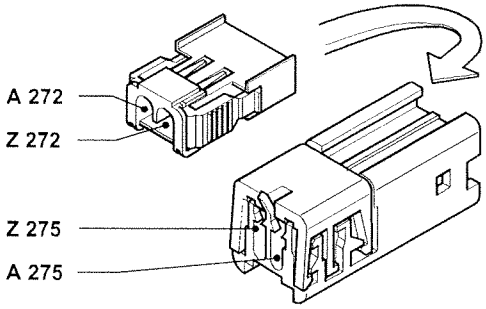

274 Connection between dashboard and AIR-BAG cables

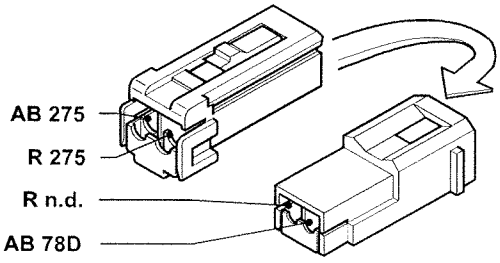

275 AIR-BAG control unit

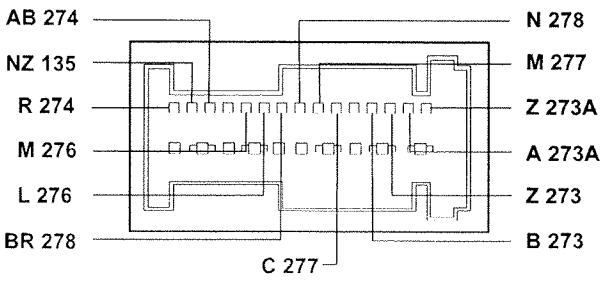

3U317I

P3U317I01

Copyright by Fiat Auto

276 Left seat belt pretensioner

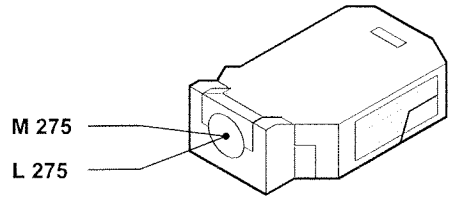

277 Right seat belt pretensioner

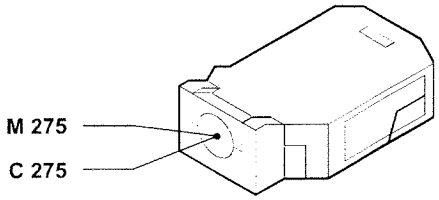

278 Diagnostic socket for AIR-BAG

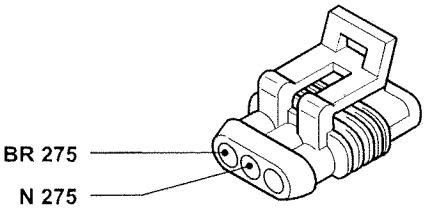

281 Front courtesy light

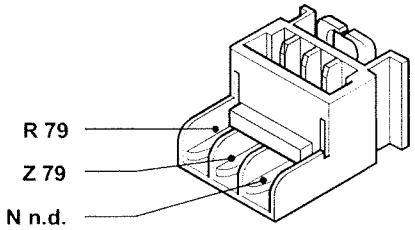

282 Electro-chromic interior rear view mirror

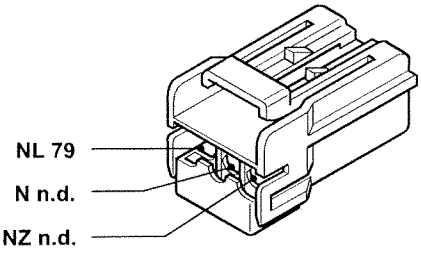

283 Passenger sun visor courtesy light

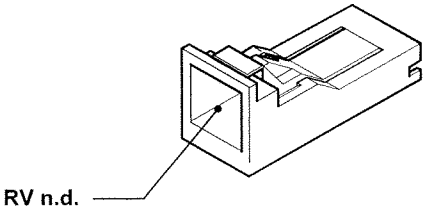

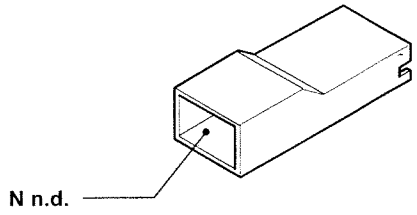

P3U318I01

284 Preparation for electrically operated sun roof

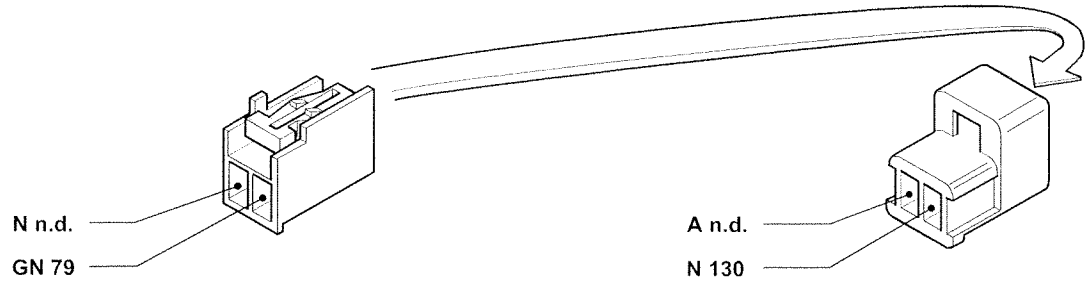

290 Left front air vent controls light

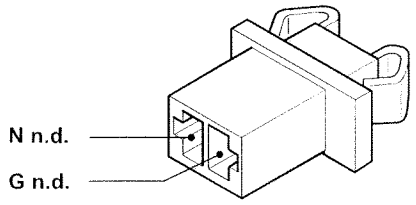

291 Left centre air vent controls light

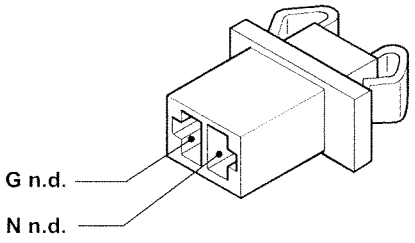

292 Right centre air vent controls light

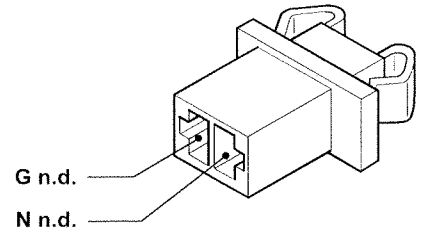

293 Right front air vent controls light

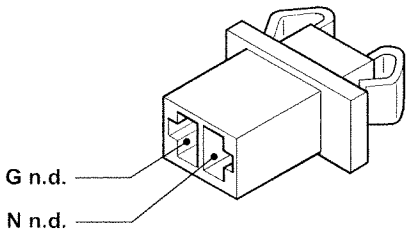

295 Radio cables connection

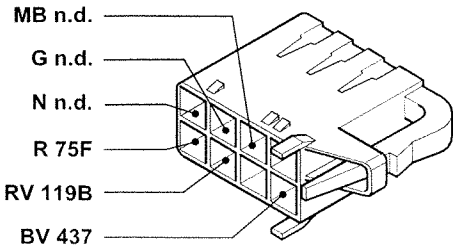

296 Radio cables connection

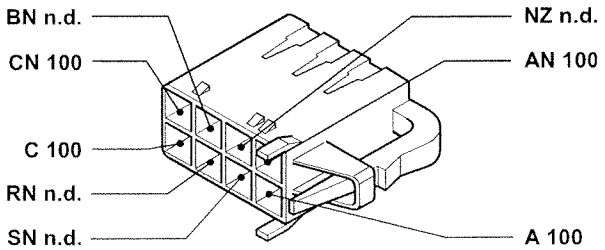

3U319I

P3U319I01

297 Alarm device warning light
(Only for versions with alarm)

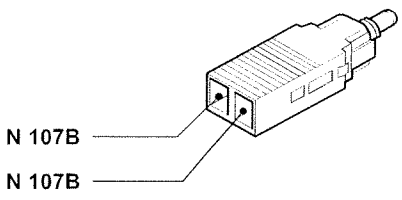

297 Alarm device warning light
(Only for versions without alarm)

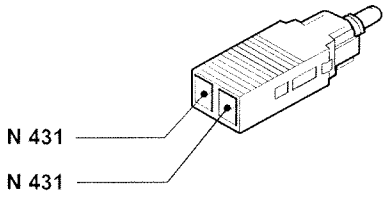

298A Electric front windows control unit (Only for COUPE' versions)

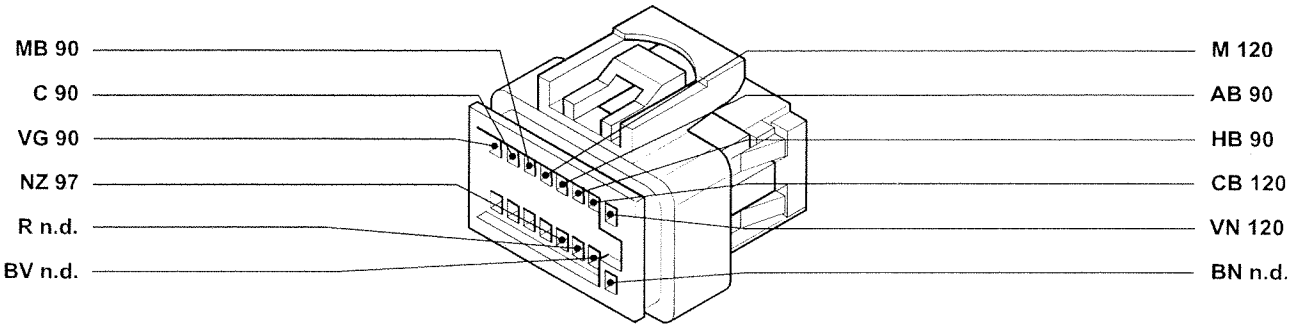

298B Electric front windows control unit
(Only for COUPE' versions)

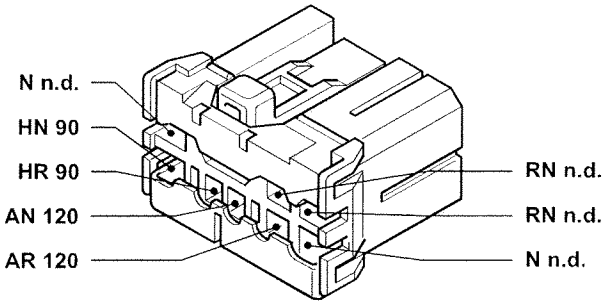

298A Electric front windows control unit

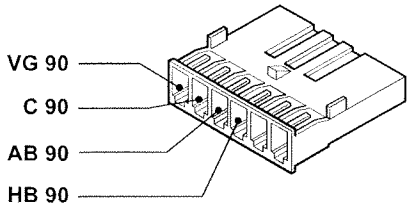

298B Electric front windows control unit

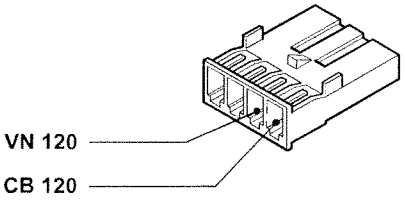

3U320I

P3U320I01

298C Electric front windows control unit

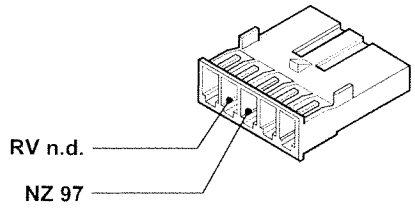

298D Electric front windows control unit

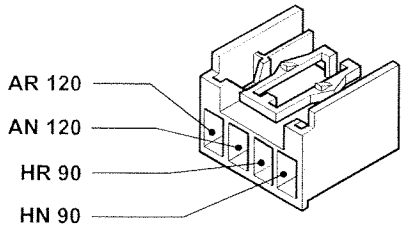

298E Electric front windows control unit

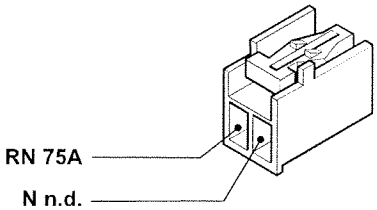

301 Solenoid valves

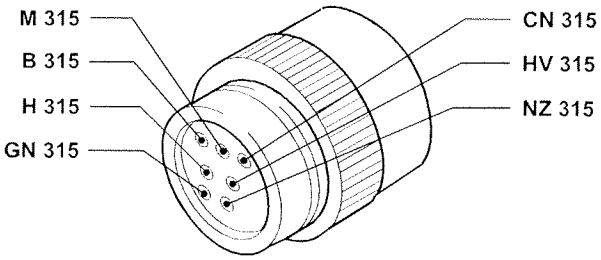

300 Central locking electronic control unit

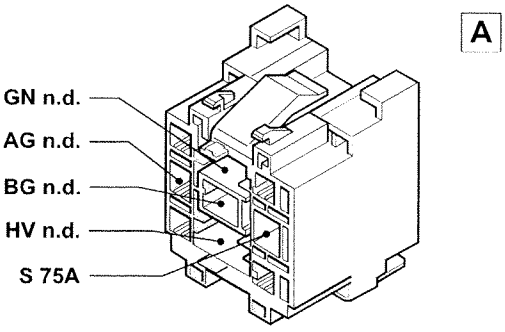

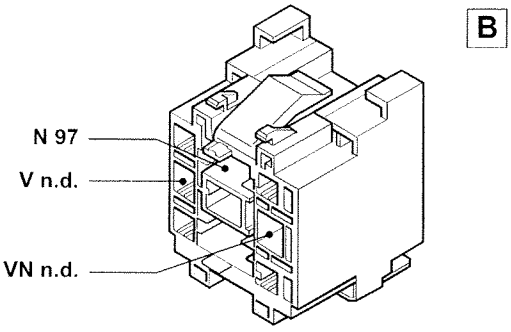

302 Switch control unit

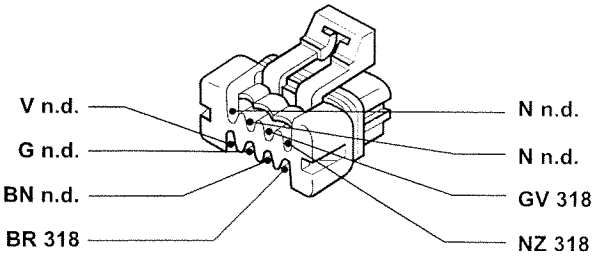

306 Electronic automatic transmission horn

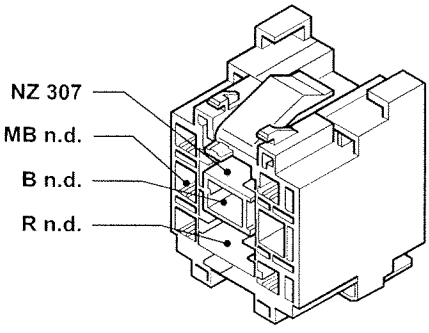

3U3211

P3U321I01

Copyright by Fiat Auto

307 Switch for electronic automatic transmission horn



315 Electronic automatic transmission gear selector control unit (ZF)

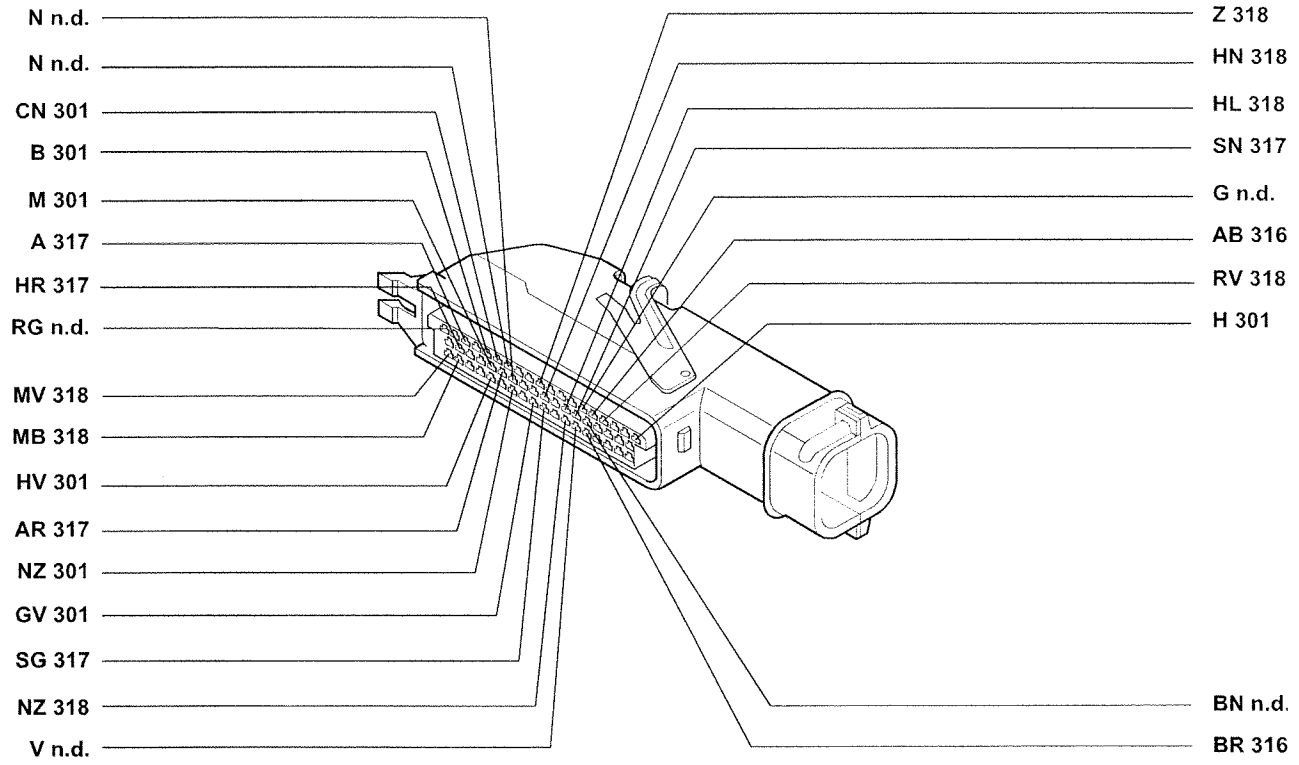

316 Diagnostic socket for electronic automatic transmission (Only for 2959)

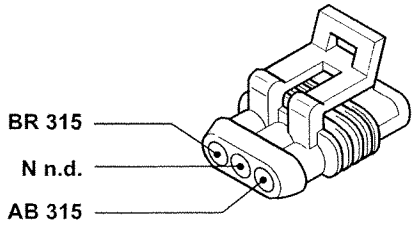

316 Diagnostic socket for electronic automatic transmission (Only for 1998 - 2446)

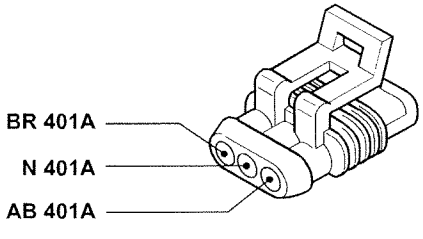

3U322I

P3U322I01

317 Conneection between electronic automatic transmission and electronic injection cables (Only for 2959)

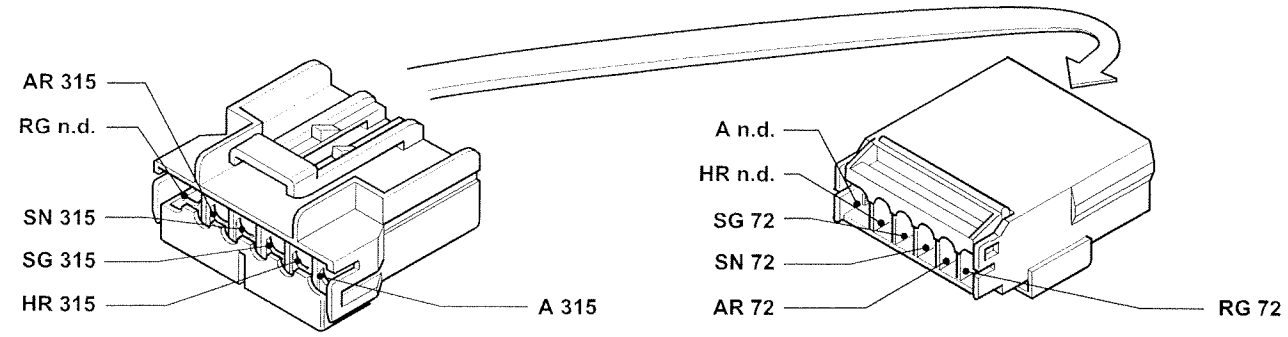

317 Connection between electronic automatic transmission and electronic injection cables (Only for 1998 - 2446)

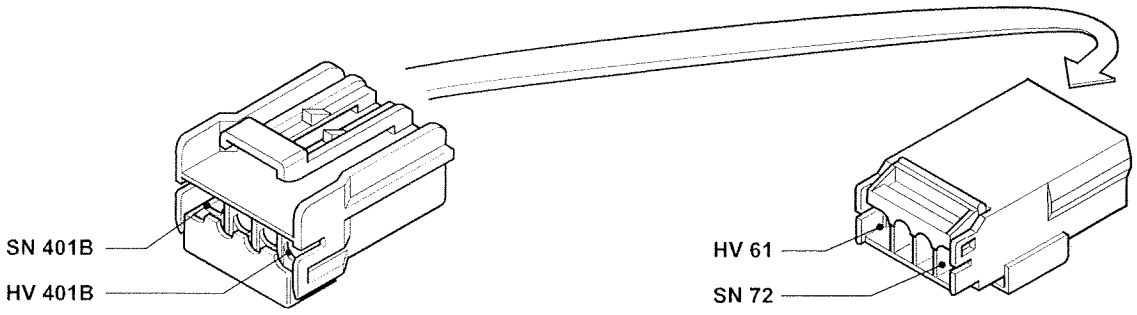

318 Connection between electronic automatic transmission and dashboard cables

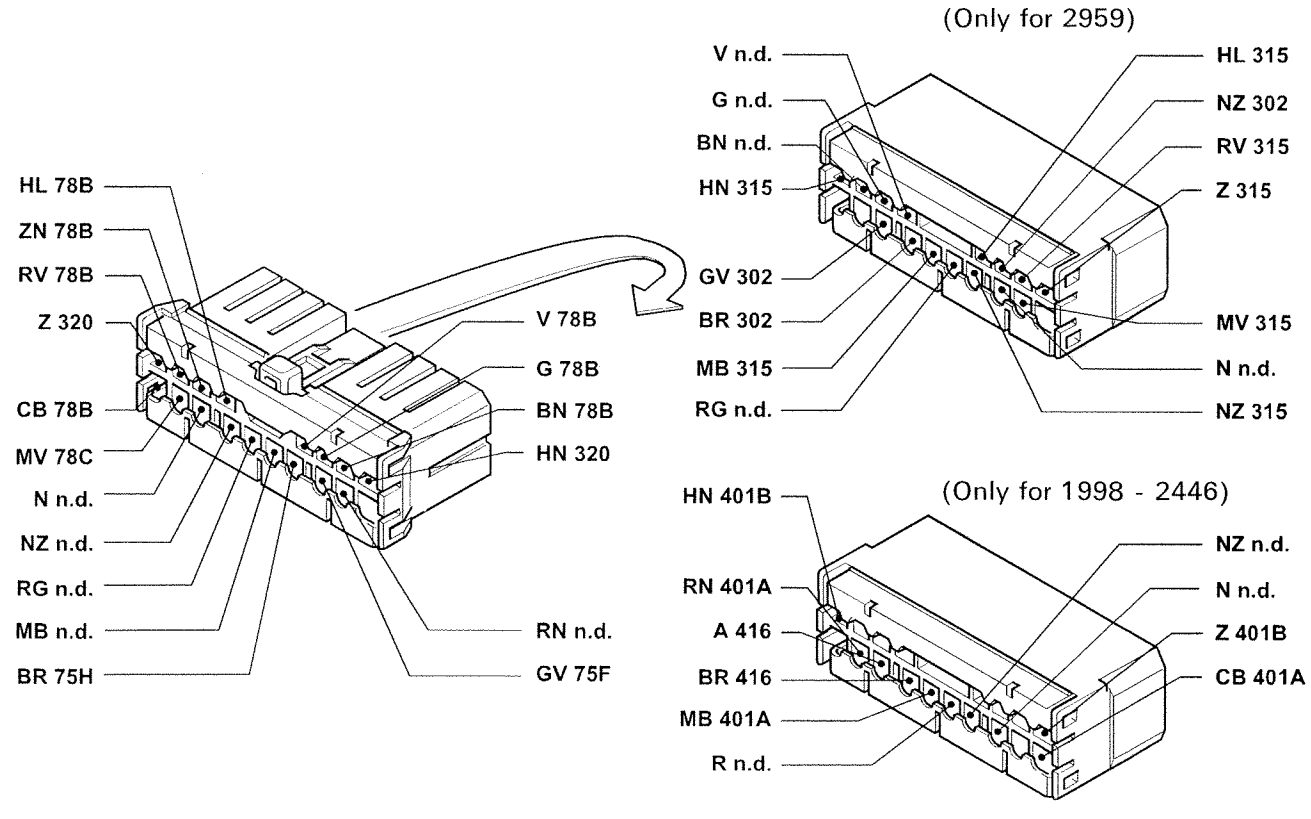

3U323I

P3U323I01

Copyright by Fiat Auto

319 Preparation for Kick-Down (Only for 1998 - 2446)

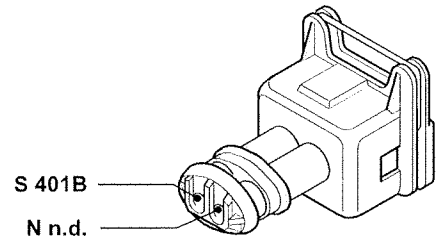

320 Trim on automatic transmission gear selector lever (Only for 1998 - 2446 - 2959)

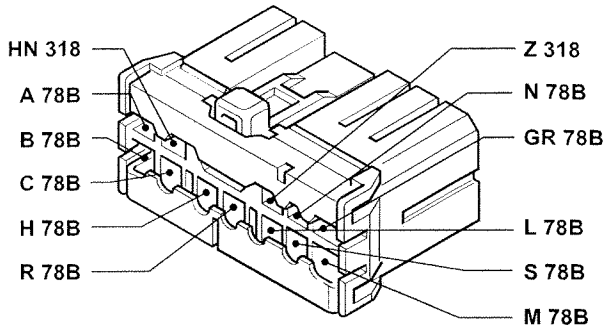

321 Motor for left front controlled damping suspension (S.C.S.)

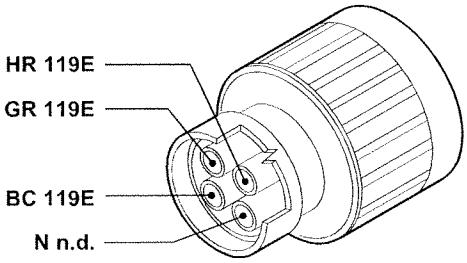

322 Motor for right front controlled damping suspension (S.C.S.)

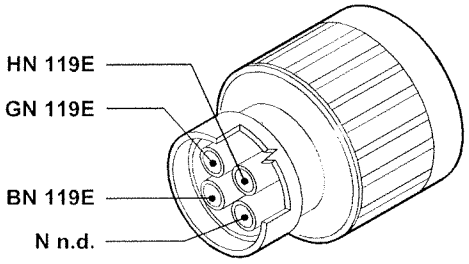

334 Accelerometer for controlled damping suspension (S.C.S.)

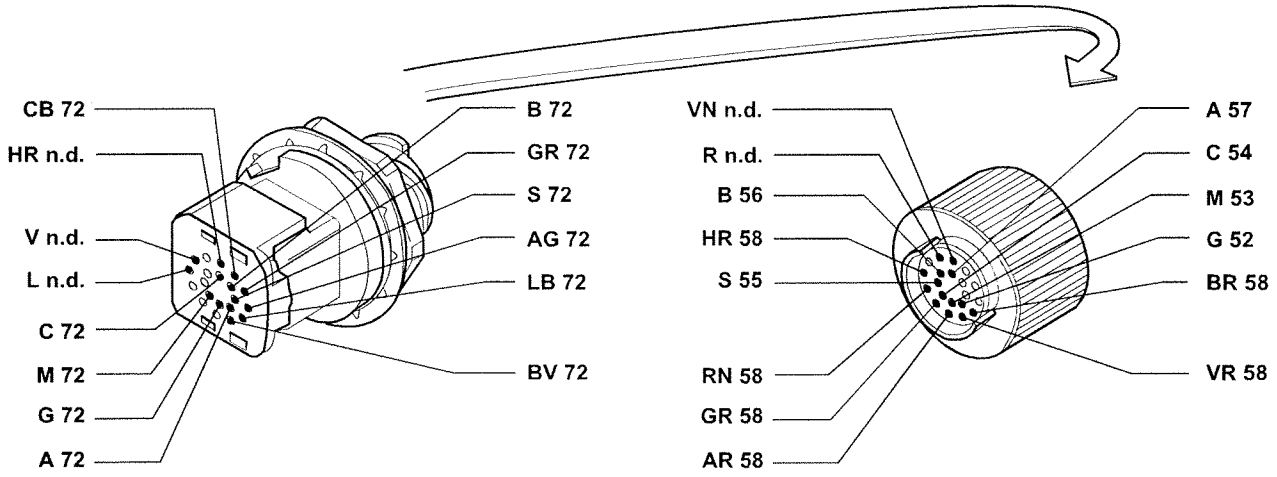

3U324I

P3U324I01

323 Accelerometer for controlled damping suspension (S.C.S.)

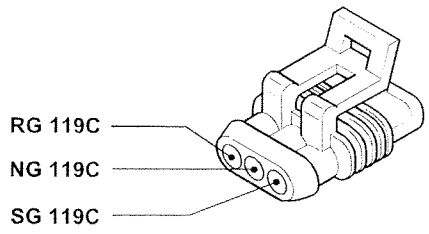

340 Right front brake pad wear sensor

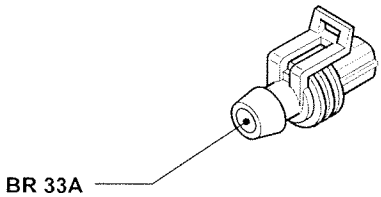

341 Right side direction indicator

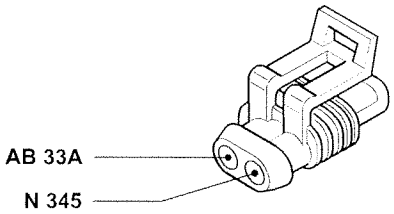

342 Electric windscreen washer pump

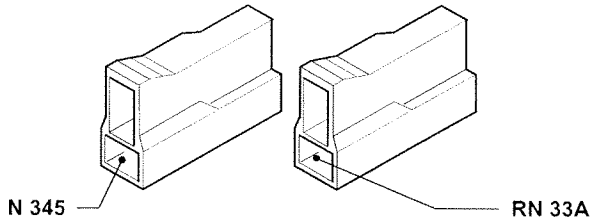

342 Electric windscreen washer pump

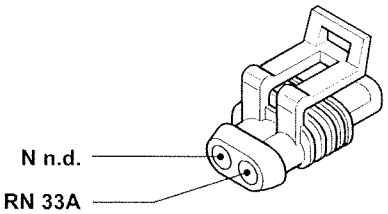

343 40A starter relay

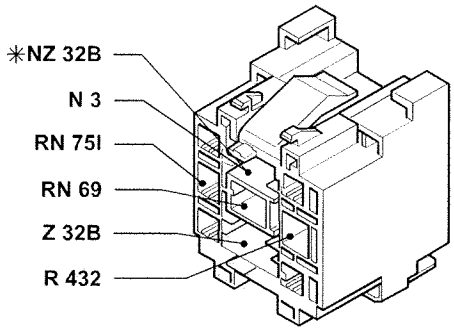

* Variant connection for versions with automatic transmission

344 Connection between dashboard and anti-lock brakes cables (A.B.S.)

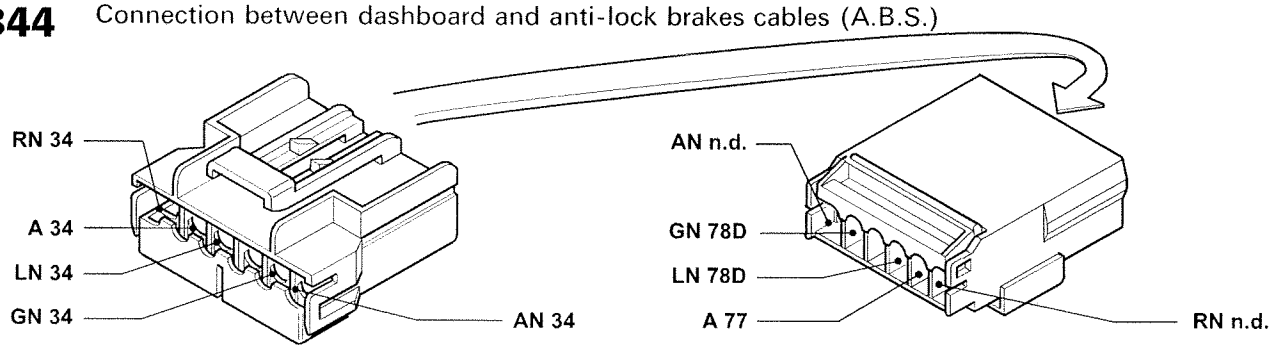

3U325I

P3U325I01

345 Right front earth

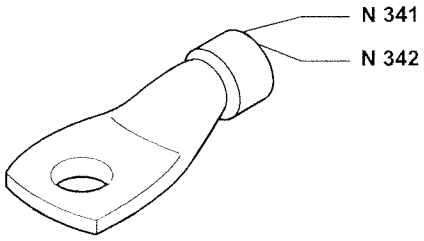

354 Electric diesel pump

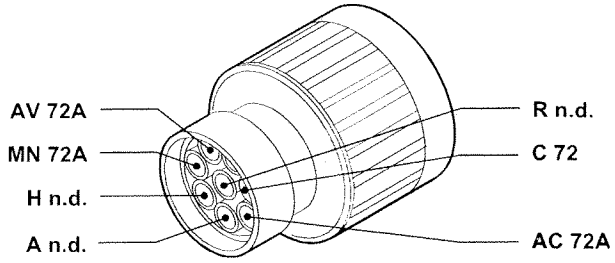

355 Instrument injector

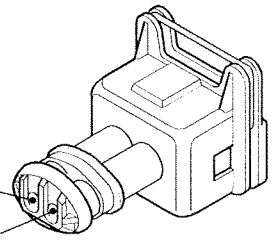

356 Solenoid valve on diesel pump

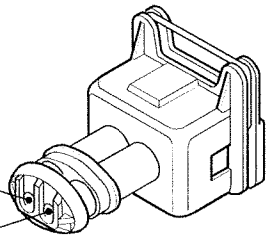

357 Heater plugs control unit (Only for Turbo Diesel versions)

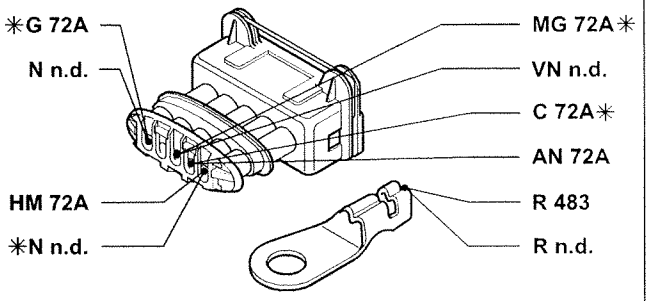

* Variant connection for 2387 JTD

358 Engine cut out solenoid on injection pump

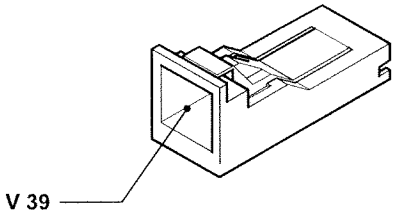

361 Switch on clutch pedal (Only for Turbo Diesel versions)

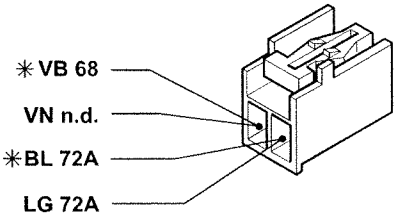

* Variant connection for 2387 JTD

364 Potentiometer on accelerator pedal (Only for 2387 TD)

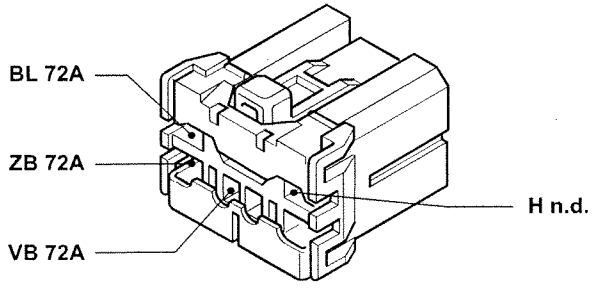

3U326I

P3U326I01

364 Potentiometer on accelerator pedal (Only for 2387 JTD)

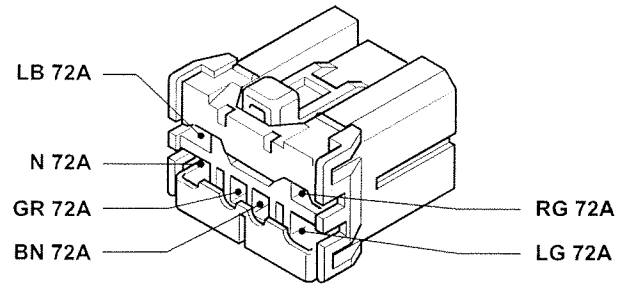

367 Left headlamp alignment

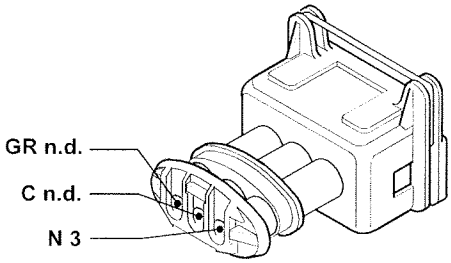

368 Right headlamp alignment

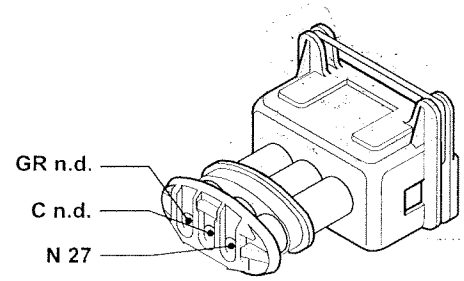

369 Connection between electronic injection and left longitudinal cables

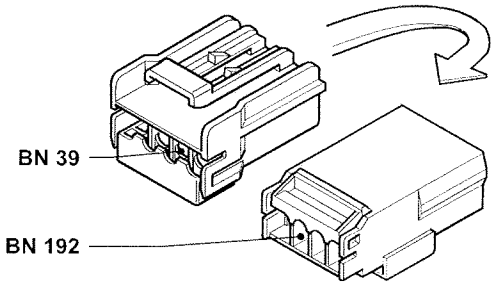

374 Diagnostic socket

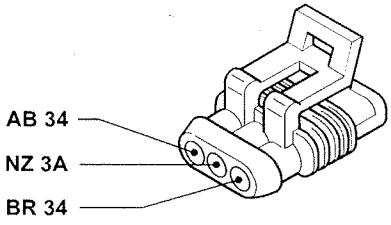

377 Phase transformer

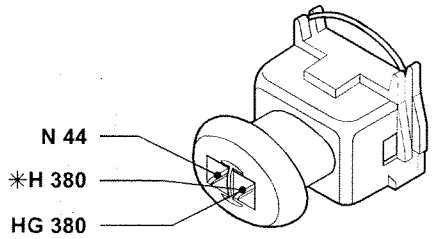

* Variant connection for 1998 - 2446

380 Relay for phase transformer

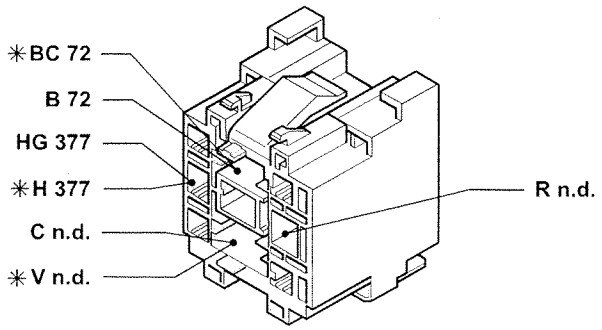

* Variant connection for 1998 - 2446

382 Heated diesel filter relay feed (P.T.C.)

(Only for Turbo Diesel versions)

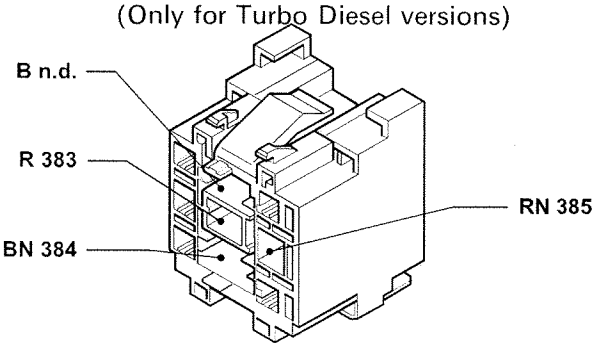

3U327I

P3U327I01

Copyright by Fiat Auto

55.

383 15A fuse protecting heated diesel filter (P.T.C.)
(Only for Turbo Diesel versions)

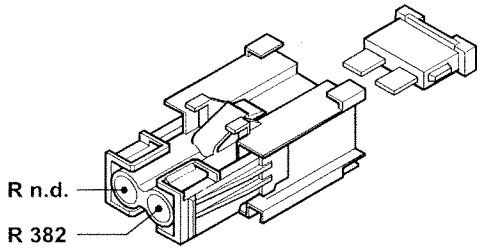

384 Heated diesel filter thermal contact (P.T.C.) (Only for Turbo Diesel versions)

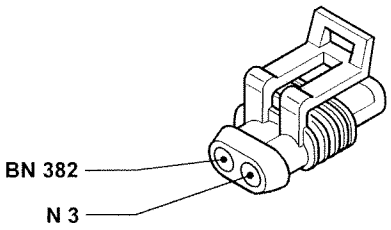

385 Heated diesel filter resistance (P.T.C.)
(Only for Turbo Diesel versions)

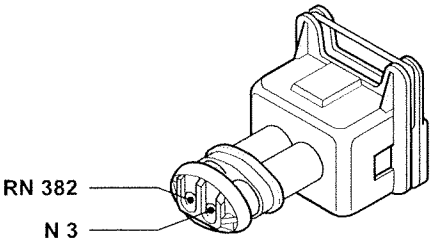

413 Connection to the solenoid valves
(Only for 1998 - 2446)

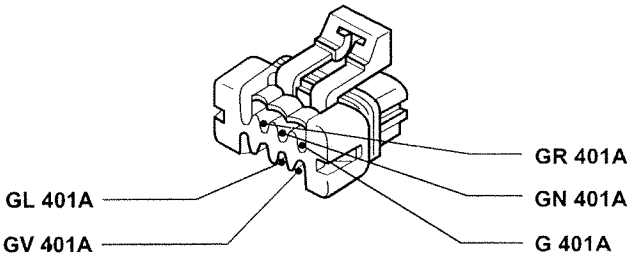

401 Electronic automatic transmission gear selector control unit (AISIN) (Only for 1998)

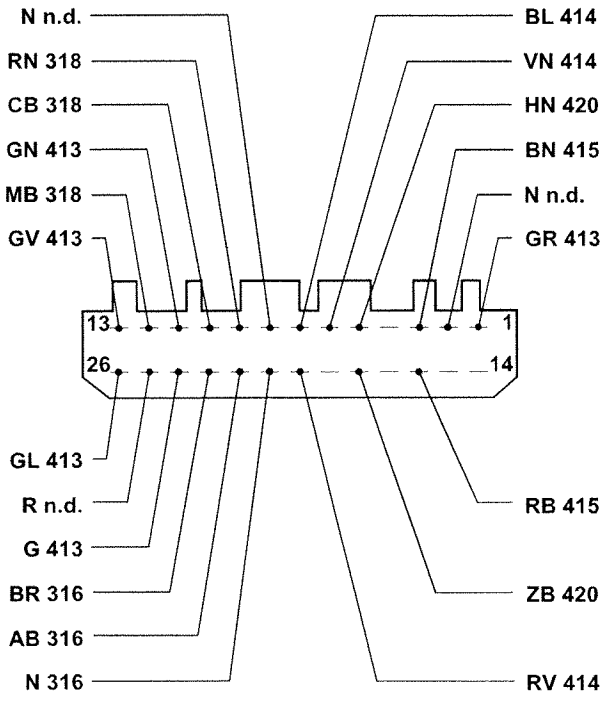

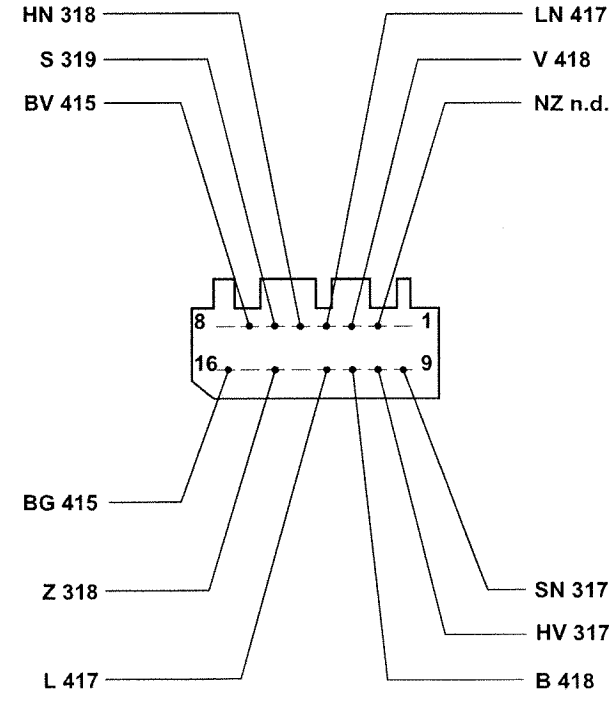

3U328I

P3U328I01

414 Butterfly valve position potentiometer (Only for 1998 - 2446)

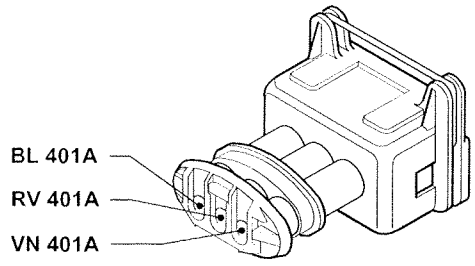

415 Gear position selector (Only for 1998)

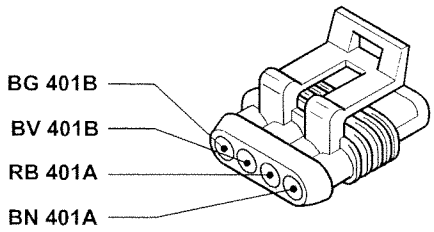

416 Gear position selector (Only for 1998)

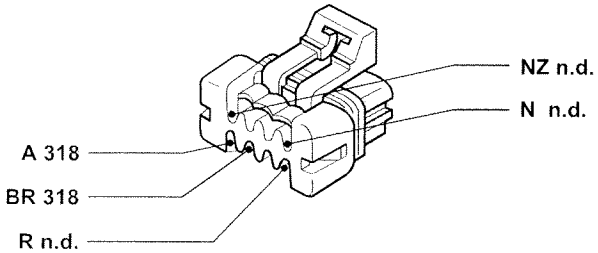

417 Engine rpm sensor (Only for 1998)

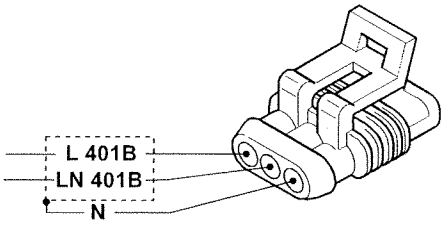

418 Vehicle speed sensor (Only for 1998)

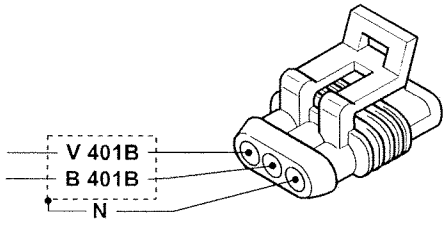

420 Gearbox oil temperature sensor (Only for 1998)

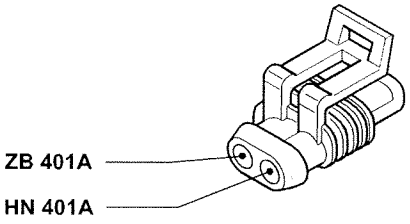

422 Connection between dashboard and left longitudinal cables (Only for Station Wagon versions)

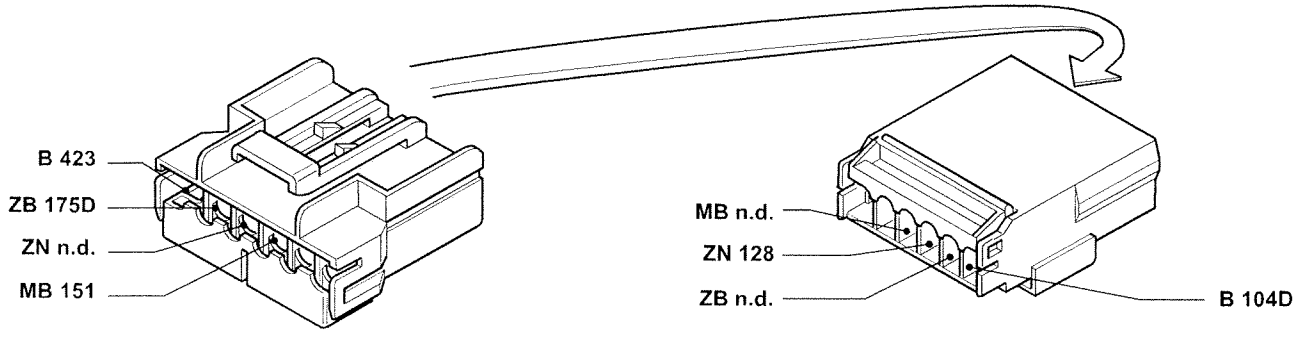

3U3291

P3U329I01

Copyright by Fiat Auto

422 Connection between dashboard and left longitudinal cables (Only for saloon versions)

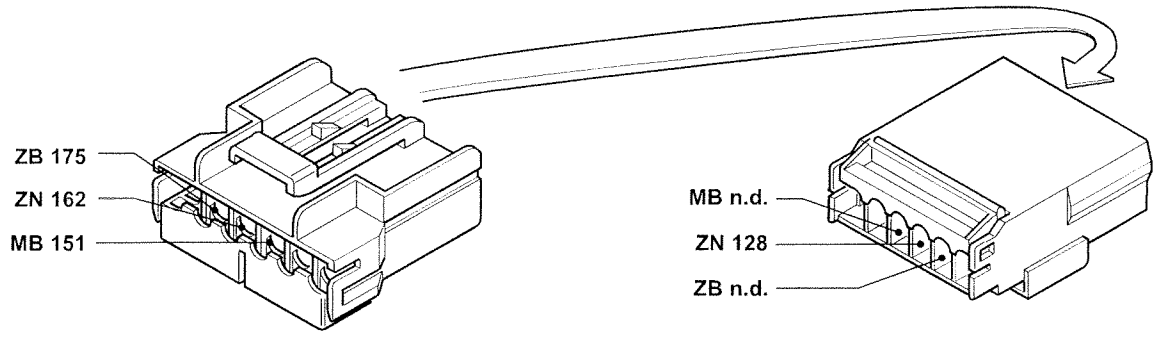

422 Connection between dashboard and left longitudinal cables (Only for COUPE' versions)

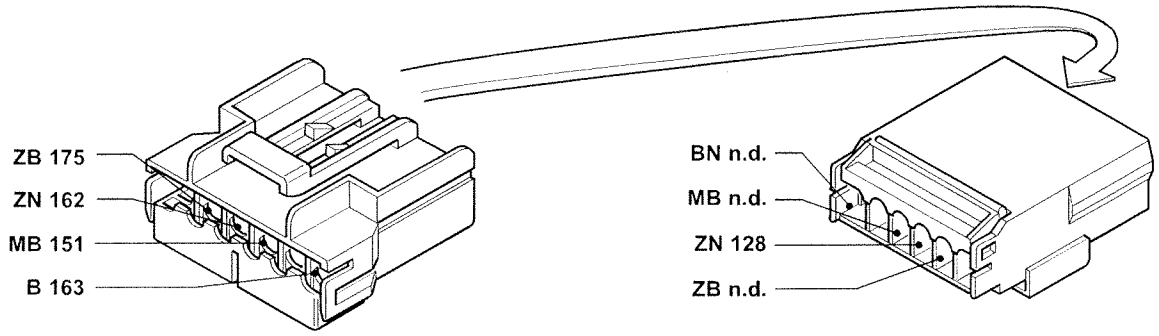

423 Rearscreen wiper relay feed (Only for Station Wagon versions)

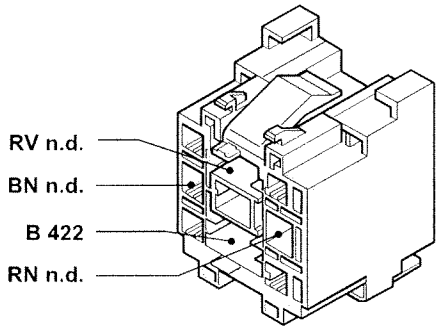

424 Rearscreen wiper control switch (Only for Station Wagon versions)

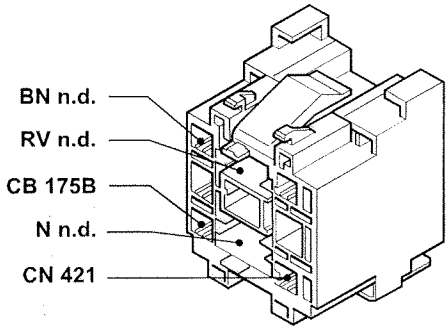

425 Right luggage compartment light (Only for Station Wagon versions)

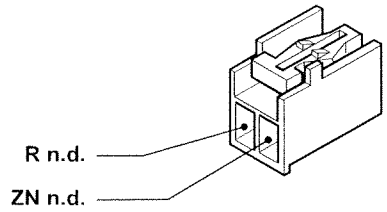

427 Electric pump for rearscreen washer (Only for Station Wagon versions)

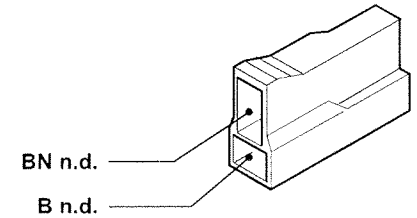

3U330I

P3U330I01

426 Speaker in tailgate (woofer) (Only for Station Wagon versions)



428 Connection between longitudinal/left tailgate cables for Speaker (Only for Station Wagon versions)

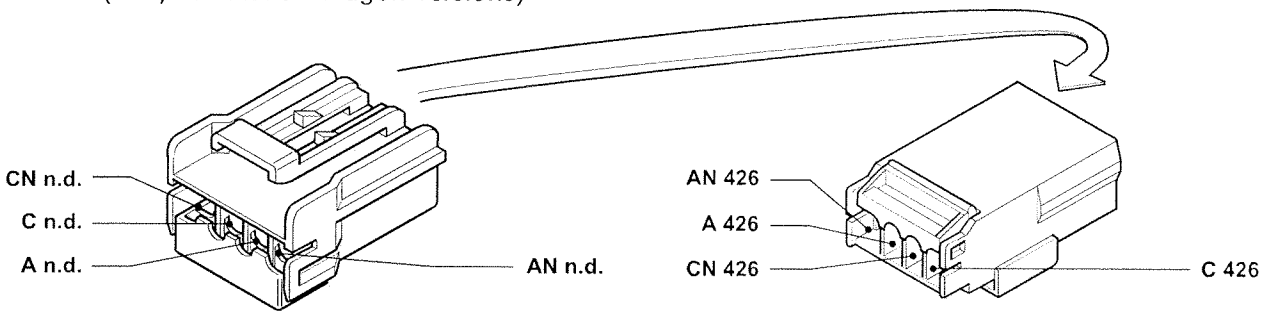

429 7.5A fuse protecting heated rear view mirrors

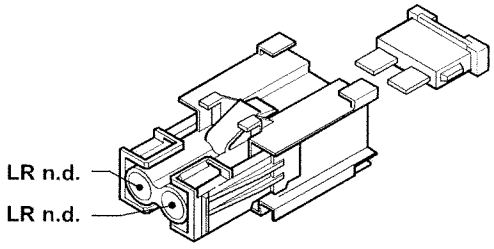

430 Handbrake applied/insufficient brake fluid level connector diode

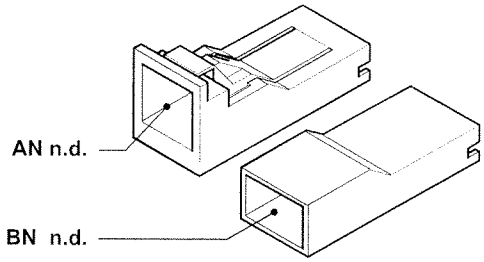

431 Direction indicators operation with doors locked

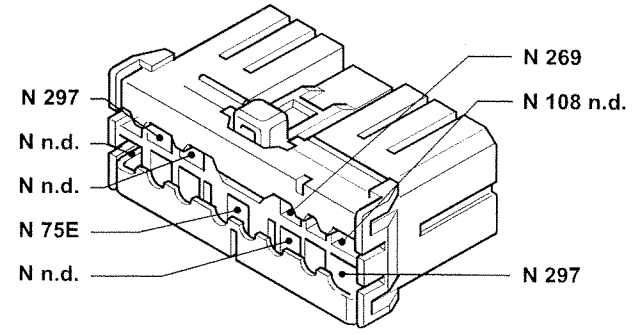

432 20A protective fuse for ignition switch relay feed

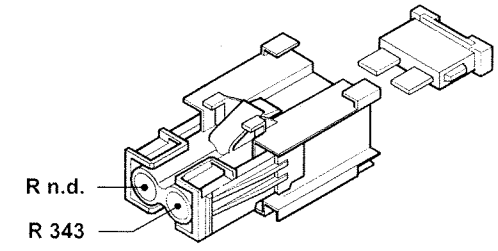

3U3311

P3U331I01

Copyright by Fiat Auto

55.

433 Rearscreen wash/wipe motor (Only for Station Wagon versions)

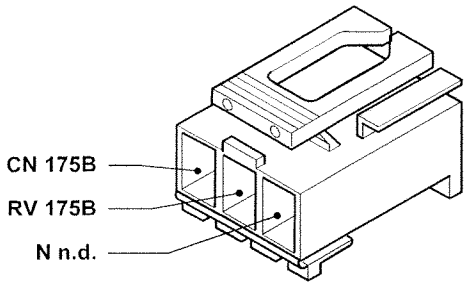

434 15A fuse protecting current socket

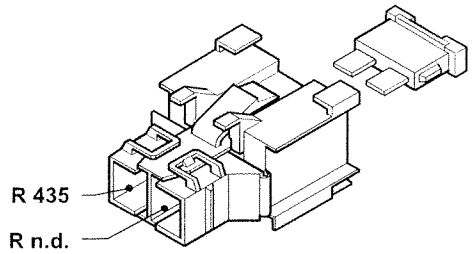

435 Current socket relay feed

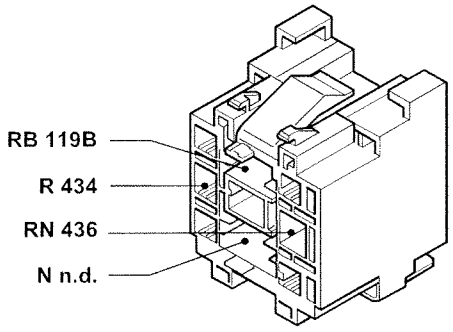

436 Current socket

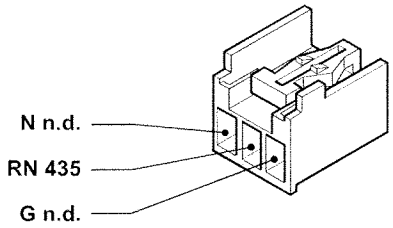

437 Preparation for radio phone

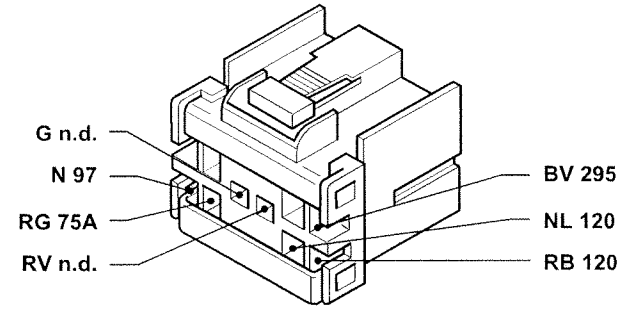

438 Dual function speaker for radio and hand-s-free radio phone in front door

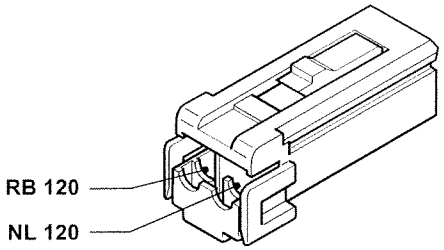

439 Electrically adjustable driver's seat control unit

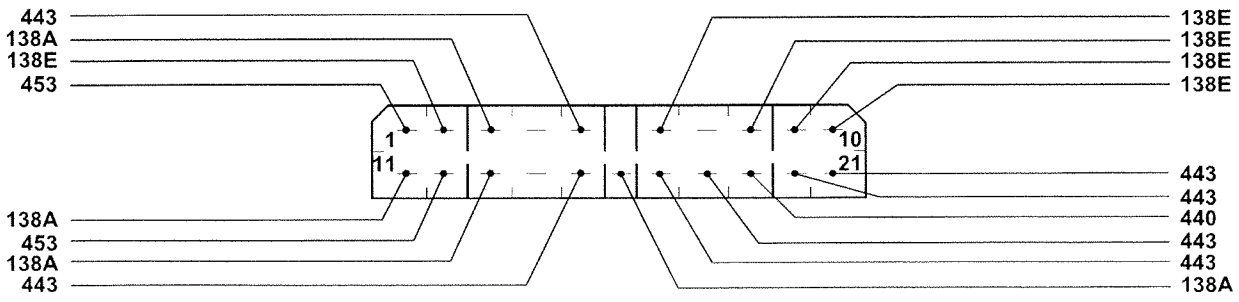

P3U332I01

3U332I

440 Diagnostic socket for electrically adjustable driver's seat

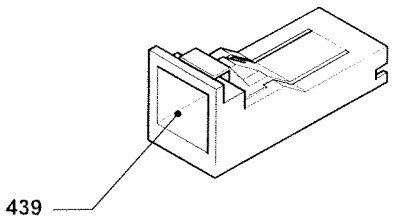

443 Connection between right longitudinal and driver's easy-enter electrically operated seat cables

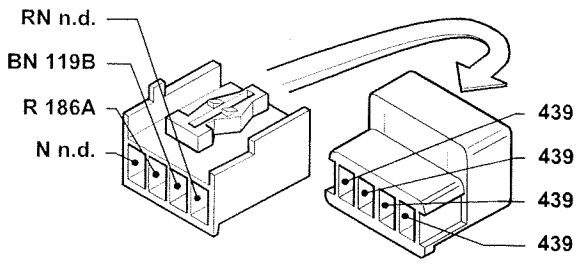

444 Connection between right longitudinal and passenger easy-enter electrically operated seat cables

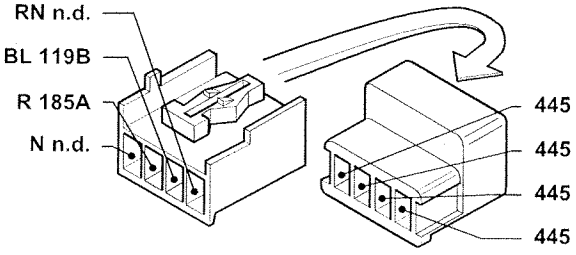

449 Left electric window control panel on left door

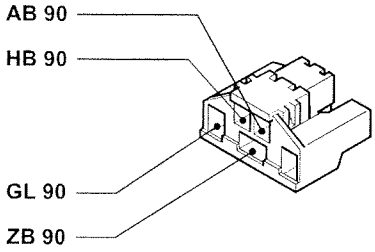

445 Electrically operated passenger seat control unit

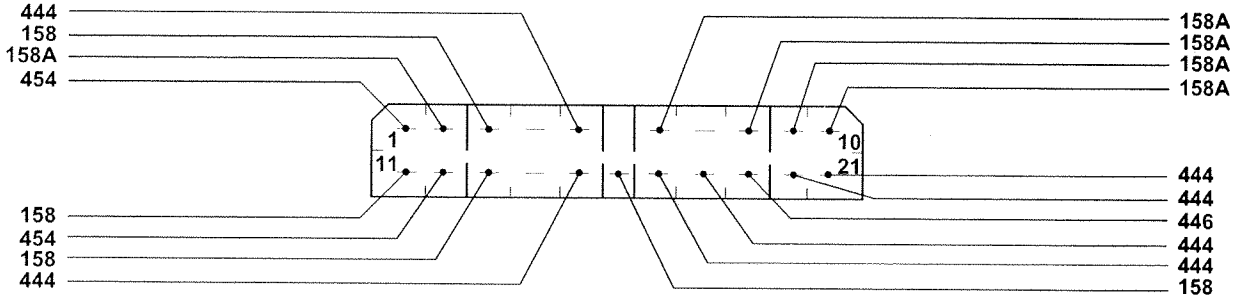

446 Diagnostic socket for electrically adjustable driver's seat

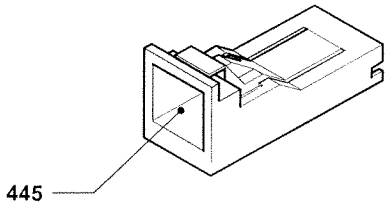

450 Micro-switch for electric windows in left window

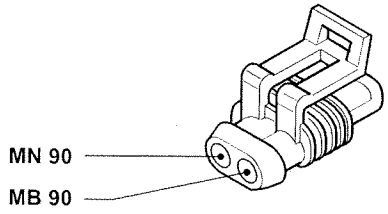

3U333I

P3U333I01

Copyright by Fiat Auto

55.

451 Right electric window control panel on left door

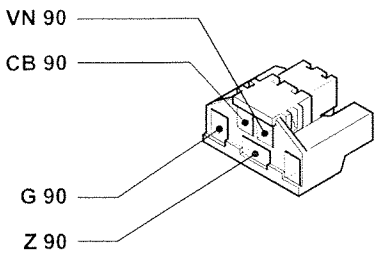

452 Micro-switch for electric windows in right window

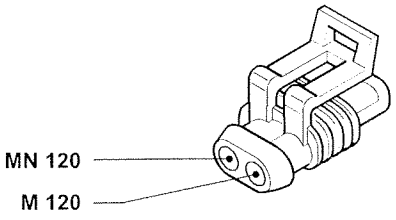

453 Connection for driver's seat position sensors

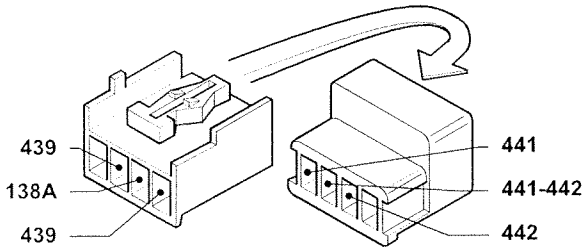

454 Connection for passenger seat position sensors

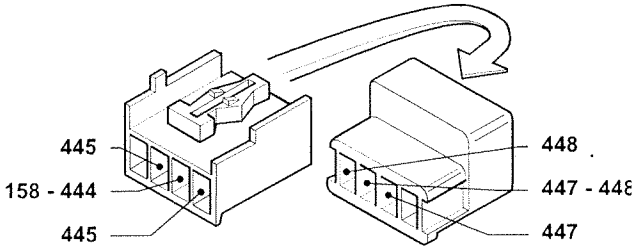

455 Dual-function aerial for radio and radio phone

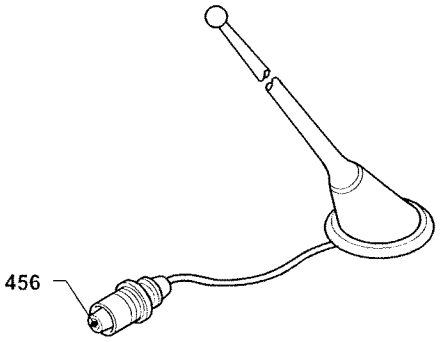

456 Connector for radio phone aerial

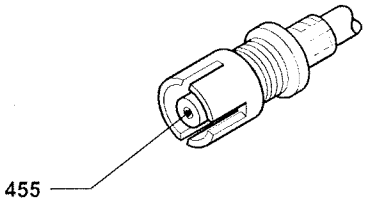

476 80A fuse protecting heater plugs control unit

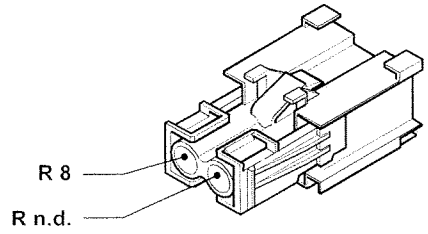

477 Electric fuel pump relay

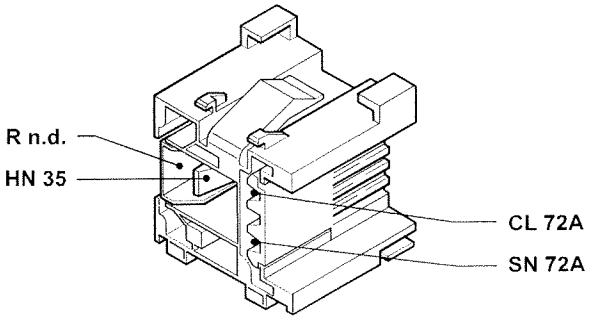

P3U334I01

3U334I

478 Fuel pressure regulator

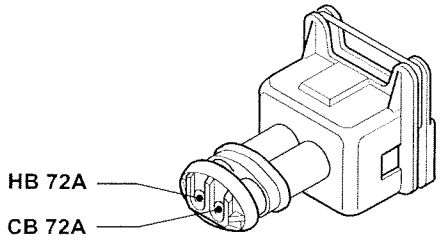

479 Fuel temperature sensor

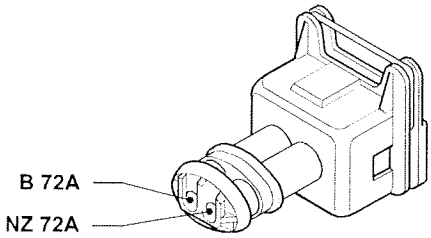

480 Turbo pressure regulator

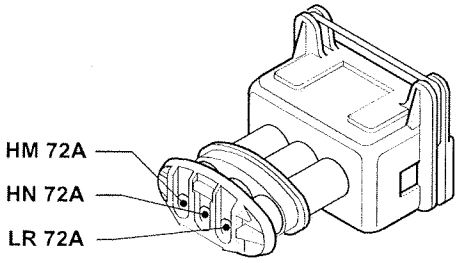

481 Fuel pressure sensor

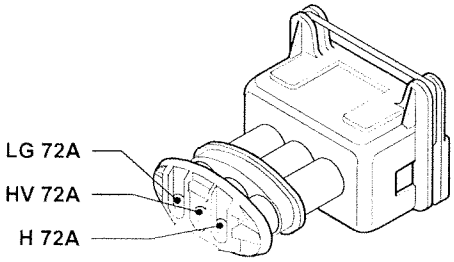

482 Electric fuel pump / fuel gauge

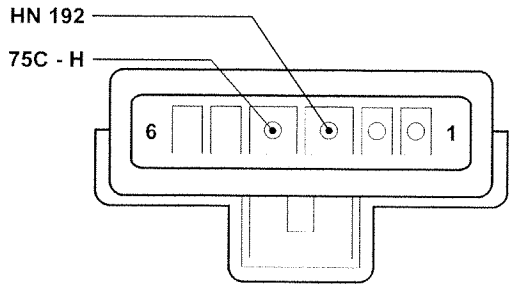

483 50A fuse protecting heater plugs control unit

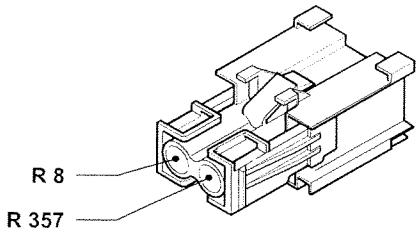

484 Over-boost solenoid valve (Only for 1998 20v Turbo)

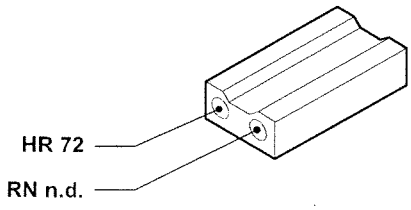

485 Modular manifold solenoid valve (Only for 1998 - 2446)

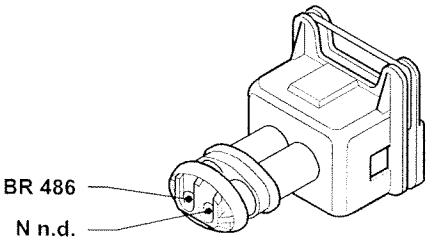

3U335I

P3U335I01

Copyright by Fiat Auto

55.

486 Relay for modular manifold solenoid valve (Only for 1998 - 2446)

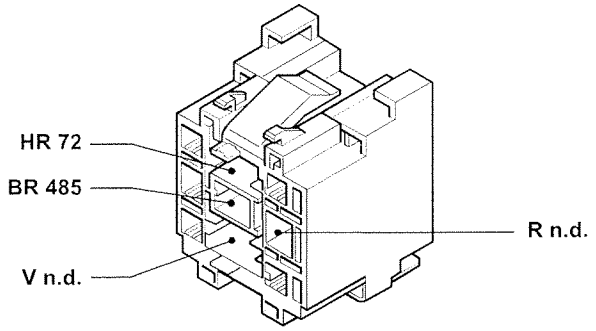

487 Connection for aerial supply (Only for Saloon - Coupé versions)

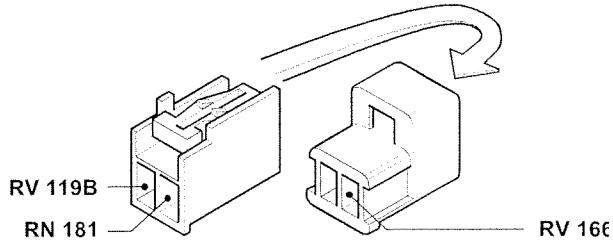

488 150A maxi fuse (Only for petrol versions)

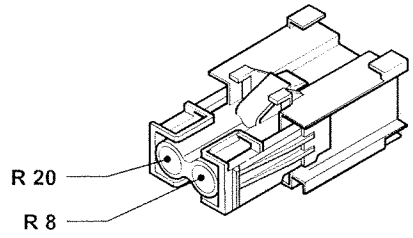

488 150A maxi fuse (Diesel versions only)

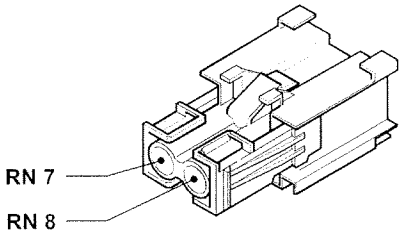

489 60A protective fuse for anti-lock brakes (A.B.S.)

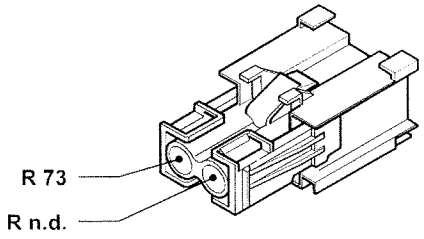

N.D. Ultrasound welding taped in cable loom

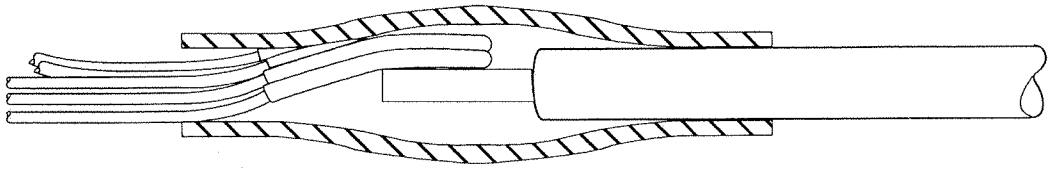

P3U336I01

3U336I