LANCIA

LANCIA k

1st Volume

Workshop
Manual

Interior

In order to place the greatest emphasis on comfort, the interior fittings have been the subject of modifications.
The most apparent change involves the seats which have new foam and modified covers to guarantee comfort and give an improved wraparound effect.

CHARACTERISTICS AND TECHNICAL SPECIFICATIONS

There follows the main technical specifications of the Lancia k SW and saloon 96 range for the 5 engine types.
Other characteristics and technical specifications, in addition to the repair instructions are given in the specific Service Manual updates identified by print nos. 506.475/08, /14, /16 for the 96 range saloon and nos. 506.475/12 and/15 for the Lancia k Station Wagon.

LANCIA k 2.0 20v

– Bodywork version code:	
Saloon Power Drive and Comfort Drive	838 AG 1AA
Saloon Automatic Transmission	838 AG 11A
Station Wagon Power Drive	838 BG 1AA
– Engine marking	838 A6.000
– Total capacity (5 cylinder)	1998 cc
– Max power CEE	114 kW (155 CV)
– Corresponding speed	6500 rpm
– Max torque CEE	186 Nm (19,0 kgm)
– Corresponding speed	4000 rpm
– Timing	T OHC
– Engine balancing	through 1 counter-balance shaft
– Fuel system	Bosch Motronic electronic injection
– Ignition	integrated with the electronic injection
– Type of fuel recommended	unleaded petrol (95 RON min)
– Top speed	
Saloon Power Drive (in 5th gear)	212 km/h
Saloon Comfort Drive (in 4th gear)	212 km/h
Saloon C.A. (in 4th gear)	210 km/h
Station Wagon (in 5th gear)	205 km/h

C.A. = electronically controlled automatic transmission (AISIN)

LANCIA k 2.0 turbo

– Bodywork version code:	
Saloon	838 AB 1AA
Station Wagon	838 BB 1AA
– Engine marking	838 A4.000
– Total capacity (4 cylinder)	1998 cc
– Max power CEE	151 kW (205 CV)
– Corresponding speed	5600 rpm
– Max torque CEE	298 Nm (30,4 kgm)
– Corresponding speed	2750 rpm
– Timing	T OHC
– Engine balancing	through 2 counter balance shafts
– Fuel system	Bosch Motronic electronic injection and supercharging with GARRET turbocharger
– Ignition	integrated with the electronic injection
– Type of fuel recommended	unleaded petrol (95 RON min)
– Top speed:	
Saloon (in 5th gear)	235 km/h
Station Wagon (in 5th gear)	230 km/h

LANCIA k 2.4 20v

– Bodywork version code:	
Saloon	838 AC 1AA
Station Wagon	838 BC 1AA
– Engine marking	838 A2.000
– Total capacity (5 cylinder)	2446 cc
– Max power CEE	129 kW (175 CV)
– Corresponding speed	6100 rpm
– Max torque CEE	230 Nm (23,5 kgm)
– Corresponding speed	3750 rpm
– Timing	T OHC
– Engine balancing	through 1 counter-balance shaft
– Fuel system	Bosch Motronic electronic injection
– Ignition	integrated with the electronic injection
– Type of fuel recommended	unleaded petrol (95 RON min)
– Top speed	
Saloon (in 5th gear)	218 km/h
Station Wagon (in 5th gear)	212 km/h

LANCIA k 2.4 td

– Bodywork version code:	
Saloon	838 AH 1AA
Station Wagon	838 BH 1AA
– Engine marking	838 A7.000
– Total capacity (5 cylinder)	2387 cc
– Max power CEE	91 kW (124 CV)
– Corresponding speed	4000 rpm
– Max torque CEE	265 Nm (27 kgm)
– Corresponding speed	2000 rpm
– Timing	S OHC
– Engine balancing	through 1 counter-balance shaft
– Fuel system	indirect injection with electronically controlled pump and IHI turbocharger
– Type of fuel recommended	diesel
– Top speed	
Saloon	193 km/h
Station Wagon	190 km/h

LANCIA k 3.0 V6 24v

– Bodywork version code:	
Saloon	838 AD 1AA
Saloon C.A.	838 AD 11A
Station Wagon C.A.	838 BD 11A
– Engine marking	838 B.000
– Total capacity (6 cylinder)	2959 cc
– Max power CEE	150 kW (204 CV)
– Corresponding speed	6300 rpm
– Max torque CEE	270 Nm (27,5 kgm)
– Corresponding speed	4500 rpm
– Timing	T OHC for each cylinder head
– Fuel system	Bosch Motronic electronic injection
– Ignition	integrated with the electronic injection
– Type of fuel recommended	unleaded petrol (95 RON min)
– Top speed	
Saloon (in 5th gear)	225 km/h
Saloon C.A. (in 4th gear)	220 km/h
Station Wagon C.A. (in 4th gear)	218 km/h

C.A. = electronically controlled automatic transmission (AISIN)

Graphic representations and symbols

	Removing Disconnect
	Refitting Connect
	Dismantling Disassembly
	Fitting Composition
	Tighten to torque
	Tighten to torque plus angle
	Fully tighten
	Stake nut
	Adjustment Regulation
	Visual inspection Check
	Warning
	Lubricate Grease
	Replace Genuine spares
	Bleed braking system
	Work surface Machined surface
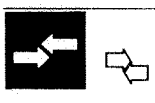	Interference Force fit
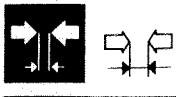	Distance to be measured Measurement – Check Thickness - Clearance
	Rolling torque

	Inlet
	Exhaust
	Operation
	Tolerance Difference in weight
	Pre-loading
	Rotation
	Compression ratio
	Selection Classes
	Oversize Greater than .... Maximum
	Undersize Smaller than .... Idling
	Number of revs
	Ratio
	Pressure
	Temperature
	Temperature <0°C Cold Winter
	Temperature >0°C Hot Summer
	Windscreen wiper with electric washer pump
	Rearscreen wiper with electric washer pump
	Engine

Copyright by Fiat Auto

Service News

Copyright by Fiat Auto no. 4/98 - 07-05-1998

Fiat Auto S.p.A
D.M.C. - Marketing di Settore
Servizi Post Vendita

LANCIA k

version: all versions

00
05.98

0000 0 000 AA **LANCIA k 98 RANGE**

New aesthetic features and new engine types

OPERATIONS IN PRODUCTION

The new LANCIA k 98 range is distinguished through the introduction of the following improved features:
- new engine types;
- new aesthetic features;
- new optional equipment and higher specification level offered as standard.

New engine types

There are two new engine types fitted on the 98 range: a 2000 cc 5 cylinder, 20 valve turbo petrol version (2.0 turbo 20v) replacing the 2.0 turbo 16v and a 2400 indirect injection turbo Diesel version (2.4 JTD) replacing the 2.4 TD.

There follows a list of the main characteristics of these new engine types:

2.0 turbo 20v

- Engine marking 175A3.000
- Bodywork version code
  - Saloon 838AM1AA 19
  - Station Wagon 838BM1AA 20
  - Coupé 838CM1AA 21
- Total capacity ..... 1998 cc
- Number of cylinders ..... 5 with 4 valves per cylinder
- Max. power CEE ..... 162 kw (220 CV)
- At a speed of ..... 5750 rpm
- Max. torque CEE ..... 310 Nm (31,6 kgm)
- At a speed of ..... 2500 rpm
- Timing ..... TOCH with phase transformer
- Fuel system ..... Bosch sequential timed electronic injection Motronic M 2.10.4 with turbocharger
- Ignition ..... electronic, static advance, integrated with the injection
- Top speed
  - Saloon ..... 243 kph
  - Station Wagon ..... 235 kph
  - Coupé ..... 243 kph

IL43D8

2.4 JTD

- Engine marking 838A8.000
- Bodywork version code
  - Saloon 838AL1AA 17
  - Station Wagon 838BL1AA 18
- Total capacity ..... 2387 cc
- Number of cylinders ..... 5 with 2 valves per cylinder
- Max. power CEE ..... 100 kw (136 CV)
- At a speed of ..... 4000 rpm
- Max. torque CEE ..... 304 Nm (31 kgm)
- At a speed of ..... 2000 rpm
- Timing ..... SOHC
- Fuel system ..... Bosch electronically controlled direction injection Common Rail with turbocharger
- Top speed
  - Saloon ..... 202 kph
  - Station Wagon ..... 200 kph

New aesthetic features

- New design leather steering wheel with 4 spokes.
- Bodymatched, wraparound bumpers.
- New body paintwork/interior fittings colour combinations (see tables on page 5/5).
- New armrest between the front seats with a closed compartment which can house a radiophone which can be comfortably used by passengers in the front and the back, folding over the armrest or placing it in one of the pre-set intermediate positions.
- The 2.0 20v turbo version differs through the fact that it is available in the following 5 exclusive colours: Apollo Blue, Uranus Grey, Pluto green, Nobile Red and Black; the window surrounding trims are in "gunmetal grey", the handles are bodymatched and the interior trims are in alcantara in distinctive natural colours. In addition, 16" alloy wheels with 5 bolts are fitted as standard (currently fitted on the Coupé version) with 205/55 R16 W91 tyres.

New optional equipment/standard specification level

In order to further improve vehicle safety and comfort, the following optional equipment has been introduced or extended to all versions:
- exhaust gas headlamps;
- Side Bags;
- Passenger Air Bag with passenger sensor;
- Radio-navigator.

In addition all versions have a passenger compartment light control unit fitted as standard which controls the operation of the courtesy lights including when a door is opened, even if the door locks are unlocked with the remote control and when the engine is switched off and the key is extracted from the ignition.

Exhaust gas headlamps

This optional equipment, already available on the Coupé version, is now also available on the Saloon version.
The exhaust gas headlamps have special xenon bulbs with a special reflective surface and have automatic alignment (which is essential given the intensity of the light) and an electronic control unit.
Compared with convential halogen headlamps (with iodine bulbs), exhaust gas headlamps ensure improved light emission in terms of luminosity, distribution (spectrum) and the bulbs last longer.

Side Bag

In the case of side impacts, this type of Air Bag increases the level of protection provided by the vehicle, mainly protecting the occupant's chest and abdomen.
Side Bags are made up of a module fitted by special brackets in the front seat backrest and an electronic control unit housed in the centre pillars.
The Side Bags are fitted on the seat (unlike systems which are fitted in the doors) and therefore, if they are activated, the bag is always in an optimum position in relation to the occupant, irrespective of the position of the seat or the height of the occupant.
The Side Bag module is made up of the following main components:
- nylon bag with a volume of around 12 litres;
- gas generator;
- metal container;
- cover;
- fixing brackets.

The entire module is fixed under the seat covering which does not look very different from a regular seat; obviously the covering (whether it is cloth, velour, alcantara or leather) does differ because the stitching must open up in a precise controlled manner to allow the rapid and correct unfolding and inflation of the bag without tearing.
A side impact is detected by two sensors positioned in the centre pillars (one on each side) and is transmitted in the form of an electric signal to the Air Bag control unit which only operates the Air Bag module for the side affected by the impact.

Passenger Air Bag with passenger sensor

The passenger sensor is a device capable of identifying whether a weight (and consequently a person) is present on the front passenger seat cushion.
The sensor transmits this information to the Air Bag control unit which, if there is no front passenger, disables the front and side Air Bags (if fitted) and the passenger side pre-tensioner.
Please advise Customers to always observe the general warnings in the Owner's Handbook dealing with the use of seat belts and child restraint systems.

Radio-navigator

The radio-navigator is a mobile communication system which by integrating a radio with a navigation unit is capable, by means of visual and auditory suggestions, of describing a complete route for reaching a programmed destination.
The main components of the radio-navigator system are as follows:

- High quality radio with cassette player, twin receiver (tuner), connection cable for Compact Disc player (CD changer) and display which, in addition to the normal Radio - Cassette - CD instructions, is also capable of displaying the following messages:
  - turn symbols (left arrow or right arrow);
  - distance until the next turn;
  - total distance to reach destination;
  - name of the road being driven along;
  - name of the next road to drive along;
- Navigation unit in the luggage compartment including:
  - an eight channel GPS receiver;
  - a gyroscope for detecting the changes in direction made by the vehicle;
  - a CD-ROM which contains the database (road maps) and the software necessary for navigation.
- Aerial fixed to the roof of the vehicle, powerful, but small in size; a GPS/GSM type aerial is used and it can simultaneously be used for the radio-navigator and the radio phone.

A female voice is used for the audio messages, using the radio system speakers and it is available in a choice of 6 different languages.

OPERATIONS IN THE NETWORK

For the complete description of the procedures for removing-refitting the new components, refer to the specific update for the Service Manual currently being prepared.
For the operations on the new engine types, refer to the specific updates for the Overhauling Petrol Engines Manual and the Overhauling Diesel Engines Manual currently being prepared.

Planned maintenance

The introduction of the new engine types also alters the Planned Maintenance Programme and repair times which will be appear in the next edition of S.N.

AVAILABILITY OF SPARE PARTS

For the part number and the interchangeability of the specific 98 range components, refer to the updated microfiches or CD ROMs.

Body paintwork and interior fittings colour combinations - Saloon and Station Wagon Versions

EXTERIOR COLOURS		INTERIOR FITTING COLOURS													
		Velour			Alcantara			Embroidered alcantara			Skin				
COLOURS	CODES	Wine 101	Blue 139	Grey 216	Blue 834	Charcoal Grey 858	Beige 812	Wine (½) 610	Charcoal Grey 608	Beige 615	Blue 444	Charcoal Grey 448	Beige 502	Wine (½) 449	Cream 412
LANCIA BLUE (*)	435	●	●			●	●				●		●		
ICE WHITE (●)(*)	249		●		●	●					●	●			
NOBLE RED (**)	106			●		●	●		●	●		●	●		●
PLUTO GREEN (**)	384			●		●	●		●	●		●	●		●
APOLLO BLUE (**)	425		●	●		●	●	●		●	●	●	●	●	●
IVORY (**)	204	●	●		●	●					●	●			
MERCURY GREY (**)	609	●		●	●	●					●	●			
VENUS GREY (**)	672	●	●		●		●					●	●		
URANUS GREY (**)	616		●		●	●			●		●	●			
BLACK (**)	632	●		●		●	●	●		●		●	●	●	●

(●) Saloon version only
(*) Pastel
(**) Metallescent

Bodywork and interior fitting colour combinations - Coupé Version

EXTERIOR COLOURS		INTERIOR FITTING COLOURS															
		Alcantara										Skin					
COLOURS (all metallescent)	CODES	Green 603	Charcoal Grey 626	Ice 611	Wine 610	Cream 412	Desert 432	Skin 405	Cartier 452	Brick 442	Must 462	Blue 403	Charcoal Grey 480	Violet 472	Dark Green 430	Mauve 482	Turquoise 492
LANCIA BLUE	475	●		●	●	●	●	●	●	●		●			●	●	●
STORM BLACK	805		●	●		●	●	●	●	●		●			●	●	●
PLUTO GREEN	384			●	●	●	●	●					●			●	
ENERGY BLUE	452		●	●		●	●	●					●				
MERCURY GREY	609		●	●						●	●	●	●	●	●	●	●
POWER RED	198	●			●	●	●	●			●		●				
SATURN LIGHT BLUE	420		●		●						●	●	●				

SERVICE MANUAL COMPOSITION

At present, November 1997, the **LANCIA k 1st volume** manual is composed of the following booklets:

Print N°	Sections	Page Nos.	Versions	Comments
506.475 With binder (IX/94)	**00**	1÷107	All versions	Introduction - Technical data
	10	1÷16	1998 20 v 2446 20 v	Removing-refitting power unit Replacing auxiliary shaft belt - Replacing timing belt
		1÷43	1998 20 v	Fuel system: Bosch Motronic M 2.10 MPI injection/ignition system
		1÷11	2446 20 v	Fuel system: Bosch Motronic M 2.10 MPI injection/ignition system
		1÷25	2959 V6 24v	Removing-refitting power unit Replacing auxiliary shaft belt - Replacing timing belt
		1÷25	2959 V6 24v	Fuel system: Bosch Motronic M 3.7 MPI injection/ignition system
		1÷17	2387 TD	Removing-refitting power unit Replacing auxiliary shaft belt - Replacing timing belt
		1÷24	2387 TD	Fuel system
		1÷15	All versions	Diagrams: Fuel system - Lubrication - Cooling system
	18	1÷9	All versions	Hydraulic operation Removing-refitting Clutch operation
	21-27	1÷22	1998 20 v 2446 20 v	Removing-refitting - Drive shafts - Intermediate shaft - Reverse with synchromesh - External controls
		1÷17	2959 V6 24v	Removing-refitting Viscodrive viscous coupling
		1÷14	2387 TD	Removing-refitting
	33	1÷41	All versions	Anti-lock brakes - Front brakes - Rear brakes - Handbrake - Hydraulic operation

Cont'

Copyright by Fiat Auto

Print N°	Sections	Page Nos.	Versions	Comments
506.475 With binder (IX/94)	**41**	1÷14	1998 20 v 2446 20 v 2387 TD	Removing-refitting Power assisted steering
		1÷10	2959 V6 24v	Servotronic Removing-refitting
	44	1÷18	All versions	Removing-refitting Wheel geometry
506.475/03 (II/95)	**00**	1÷3	1998 20v Electronic automatic transmission	Introduction - Technical data
	21-27	1÷65		AISIN automatic gearbox Composition and operation Overhauling and adjustments
506.475/04 (XII/94)	**00**	7÷8 9÷10 19÷20	All versions	I.S. 12/94
506.475/05 (III/95)	**00**	Preface Foreword 5÷6 27÷28 73÷74 75÷76 77÷78 79÷80 81÷82 83÷84	All versions	Technical data: update
	10	5÷6 25÷26	1998 20v	Fuel system: update
		15÷16	2387 TD	Removing-refitting timing belt: update
		23-24-25		Fuel system: update
		1÷32	1995 16v turbo	Removing-refitting power unit - Replacing auxiliary shaft belts- Replacing timing belt- Removing-refitting cylinder head
		1÷27		Fuel system: Bosch Motronic M2.7 MPI injection/ignition system
506.475/06 (X/95)	**44**	1÷27	All versions	Controlled damping suspension

Cont'

Print N°	Sections	Page Nos.	Versions	Comments
506.475/07 (V/95)	00	59 ÷ 60	2959 V6 24v Electronic automatic gearbox	Technical data: update ZF automatic gearbox Composition and operation Overhauling and adjustments
	21 - 27	1 ÷ 43		
506.473/10 (X/95)	10	15 ÷ 17	1998 20v 2446 20v	I.S. 09/95
	33	31 ÷ 32	All versions	
	44	5 ÷ 6 7 ÷ 8		
506.475/08 (IV/96)	00	58	All versions	Technical data: 96 range
		1 ÷ 3	1998 20v	Technical data: 96 range
	10	44 ÷ 45	1998 20v	Fuel system: 96 range
		1 ÷ 2 25 ÷ 30	2959 V6 24v	Fuel system: 96 range
	33	1 ÷ 18	96 range versions	Anti-lock brakes Bosch ABS 5.3
506.475/14 (VI/96)	00	36	96 range versions	Update: Technical data
		1 ÷ 2	1998 20v	Update: Technical data
	10	27 ÷ 28	2959 V6 24v	Update: Fuel system
		11 ÷ 23	2387 TD	Replacing auxiliary shaft belt - Replacing timing belt: update - Removing-refitting injection pump
		23 ÷ 24		Update: Fuel system
	33	1 ÷ 2 3 ÷ 4 7 ÷ 8	96 range versions	Update: anti-lock brakes Bosch ABS 5.3
	44	7 ÷ 7/I 7/II ÷ 8 15 ÷ 16 17 ÷ 18	All versions	Update: Front and rear suspension
		1 ÷ 11	96 range versions	Rear suspension

Cont'

Copyright by Fiat Auto

Print N°	Sections	Page Nos.	Versions	Comments
506.475/18 (X/96)	00	7 ÷ 8 67 ÷ 68	All versions	Update: Technical data
	10	1 ÷ 2	2950 V6 24v 96 range	Replacing auxiliary shaft drive belt - Replacing timing belt
		23 ÷ 25	2387 TD	Procedure for draining / refilling cooling circuit
506.475/17 (II/97)	00	1 ÷ 46	All versions	Planned maintenance operations
506.475/19 (VI/97)	00	1 ÷ 2 3 ÷ 4 5 ÷ 6 7 ÷ 8 15 ÷ 16 19 ÷ 20 25 ÷ 26 39 ÷ 40 57 ÷ 58 61 ÷ 62 73 ÷ 74 85 ÷ 86 99 ÷ 100	All versions	Update: Technical data
		1 ÷ 2	1998 20v	Update: Technical data
	10	15 ÷ 16	1998 20v 2446 20v	Update: Replacing timing belt
	44	7/II ÷ 8 15 ÷ 18	All versions	Update: Front and rear suspension - Wheel geometry
		9 ÷ 10	96 range versions	Update: Rear wheel geometry

Print N°	Sections	Page Nos.	Versions	Comments
506.475/07 (V/95)	**00**	59÷60	2959 V6 24v Electronic automatic transmission	Technical data: update ZF automatic gearbox Composition and operation Overhauling and adjustments
	21 - 27	1÷43		
506.475/10 (X/95)	**10**	15÷17	1998 20v 2446 20v	I.S. 09/95
	33	31÷32	All versions	
	44	5÷6 7÷8		
506.475/08 (IV/96)	**00**	58	All versions	Technical data: 96 range
		1÷3	1998 20v	Technical data: 96 range
	10	44÷45	1998 20v	Fuel system: 96 range
		1÷2 25÷30	2959 V6 24v	Fuel system: 96 range
	33	1÷18	96 range versions	Anti-lock brakes Bosch ABS 5.3
506.475/14 (VI/96)	**00**	36	96 range versions	Update: Technical data
		1÷2	1998 20v	Update: Technical data
	10	27÷28	2959 V6 24v	Update: Fuel system
		11÷23	2387 TD	Replacing auxiliary shaft belt - Replacing timing belt: update - Removing-refitting injection pump
		23÷24		Update: Fuel system
	33	1÷2 3÷4 7÷8	96 range versions	Update: anti-lock brakes Bosch ABS 5.3
	44	7÷7/I 7/II÷8 15÷16 17÷18	All versions	Update: Front and rear suspension
		1÷11	96 range versions	Rear suspension

Cont'

Copyright by Fiat Auto

Publication no.	Sections	Page number	Versions	Notes
506.475/18 (X/96)	**00**	7-8 67-68	All versions	Update: Technical data
	10	1-2	2959 V6 24v96range	Replacing auxiliary component belt - Replacing timing belt
		23-25	2387 TD	Procedure for draining/filling cooling circuit
506.475/17 (II/97)	**00**	1-46	All versions	Programmed maintenance operations
506.475/19 (VI/97)	**00**	1-2 3-4 5-6 7-8 15-16 19-20 25-26 39-40 57-58 61-62 73-74 85-86 99-100	All versions	Update: Technical data
		1-2	1998 20v	Update: Technical data
	10	15-16	1998 20v 2446 20v	Update: Replacing timing belt
	44	7/II-8 15-18	All versions	Update: Front and rear suspension systems - Wheel geometry
		9-10	1996 range versions	Update: Rear wheel geometry
506.475/20 (XI/97)	**10**	5-6 23-33	2387 TD 1997 version	Fuel system with hot film debimeter
	33	32/1-32/2 32/3-32/4	All versions	Update: Parking brake

Update to "LANCIA k manuals, volumes 1 - 2 - 3"
Sect. 00-10-21-27-33-55

(Publication no. 506.475/20) (XI-97) order no. *604.45.590*

This pack consists of the following sheets, in order:

- Volume 1 summary, to replace the existing manual summary.
- Contents to section 10, relating to the 2387 TD engine, to replace the existing manual contents.
- 1 sheet to replace the sheet in Section 10 of the manual relating to the 2387 TD engine fuel system.
- 6 sheets to be inserted in Section 10 of the manual relating to the 2387 TD engine fuel system.
- Contents to Section 33 to replace the Contents currently present in the manual.
- 2 sheets to be inserted in Section 33 of the manual.
- Volume 2 summary to replace the existing manual summary.
- 1 sheet to replace the sheet present in Section 55 of the manual.
- Contents to Sect. 55 relating to LANCIA k 1996 range wiring diagrams, to replace the existing manual contents.
- 1 sheet to be inserted in Section 55 relating to LANCIA k 1996 range wiring diagrams.
- Volume 3 summary to replace existing manual summary.
- Contents and sheets from section 00 relating to the LANCIA k 1997 update on the C.530 gearbox and version 2446 20V with automatic transmission.
- Contents and sheets from section 21-27 relating to the LANCIA k 1997 update on removal-refitting of the C.530 gearbox.

This manual contains the main instructions to be followed in repairing and maintaining the **LANCIA k**

The section **INTRODUCTION AND TECHNICAL DATA (00.)** has a dual function of introducing the model and supporting the remaining part of the manual. This section includes the tables of technical data and specific information relating to the sections in the remaining part of the manual.

The remaining sections (10. - 18. etc.) include descriptions of the repair operations.

This manual uses graphic representations and symbols in place of descriptions for mechanical components, operations and repair methods.

For example:

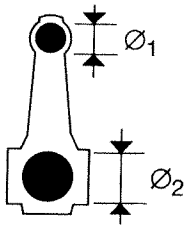

Small end diameter

Big end bearing housing



Tighten to torque

ENGINES *Section 10 contains illustrations of the operations of removing-refitting the power unit, operations on vehicle and the various fuel, lubrication and cooling systems.*
The procedure of overhauling the engines is published in separate booklets which have the following print nos.:

1995 16v: 504.513/06 — *Inserted in the Overhauling petrol engines manual 1st Volume*

1998 20v - 2446 20v: 505.808/02
2959 V6 24v: 505.810/03
2959 V6 24v 96 range: 505.810/06
— *Inserted in the Overhauling petrol engines manual 2nd Volume*

2387 TD: 505.223/02 — *Inserted in the Overhauling Diesel engines manual*

GEAR-BOXES *Section 21-27 contains illustrations of the operations of removing and refitting the gearbox. The procedure of overhauling the manual gearbox at the bench is published in a separate booklet which has the following print no.:*

505.028/05: — *Inserted in the Overhauling gearboxes manual*

THIS PUBLICATION HAS BEEN PRODUCED IN A LOOSE LEAF FORMAT TO FACILITATE THE OPERATION OF UPDATING THE MODEL.



When using chemical products stick closely to the instructions in the safety chart which the supplier must give to the consumer (for Italy in accordance with D.M. no. 46/1992)

Copyright by Fiat Auto

The LANCIA k is a three box vehicle with a load carrying structure, transversely mounted engine and front wheel drive.

The LANCIA k comes in 5 different versions.

The LANCIA k 2.0 is driven by a 1998 cc 5 cylinder in line engine with 4 valves per cylinder with BOSCH Motronic integrated electronic injection/ignition and develops a power output of 107 kW (145 CV) and 114 kW (155 CV) pefor the 96 range version.

The LANCIA k 2.0 t is driven by a 1995 cc 4 cylinder in line engine with 4 valves per cylinder with BOSCH Motronic integrated electronic injection/ignition, supercharged by a Garrett turbocharger and it develops power output of 151 kW (205 CV)

The LANCIA k 2.4 is driven by a 2446 cc 5 cylinder in line engine with 4 valves per cylinder with BOSCH Motronic integrated electronic injection/ignition and develops a power output of 129 kW (175 CV)

The LANCIA k 3.0 is driven by a 2959 cc 6 cylinder 60° V engine with 4 valves per cylinder with BOSCH Motronic integrated electronic injection/ignition and develops a power output of 150 kW (204 CV)

The LANCIA k 2.4 td is driven by a 2387 cc 5 cylinder in line electronically controlled indirect injection Diesel engine, supercharged by an IHI turbocharger and develops a power outpu of 91 kW (124 CV)

Graphic representations and symbols

	Removing Disconnect
	Refitting Connect
	Dismantling Disassembly
	Fitting Composition
	Tighten to torque
	Tighten to torque plus angle
	Fully tighten
	Stake nut
	Adjustment Regulation
	Visual inspection Check
	Warning
	Lubricate Grease
	Replace Genuine spares
	Bleed braking system
	Work surface Machined surface
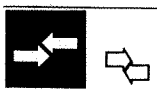	Interference Force fit
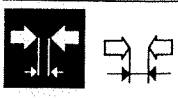	Distance to be measured Measurement – Check Thickness - Clearance
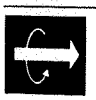	Rolling torque

	Inlet
	Exhaust
	Operation
	Tolerance Difference in weight
	Pre-loading
	Rotation
	Compression ratio
	Selection Classes
	Oversize Greater than .... Maximum
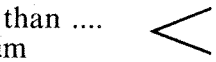	Undersize Smaller than .... Idling
	Number of revs
	Ratio
	Pressure
	Temperature
	Temperature <0°C Cold Winter
	Temperature >0°C Hot Summer
	Windscreen wiper with electric washer pump
	Rearscreen wiper with electric washer pump
	Engine

Copyright by Fiat Auto

Index

00.

page

INTRODUCTION

- Car exterior 1
- Identification data 2
- Performance-Fuel consumption 4
- Weights 6
- Dimensions 7
- Capacities 8
- Characteristics of Fiat Lubricant products 9

TECHNICAL DATA

ENGINES 1998 20v 2446 20v 1995 16v turbo

- Characteristics 10
- Typical curves 11
- Cylinder block/crankcase, crankshaft and associated components 12
- Counter balance shafts 16
- Cylinder head assembly and valve gear components 17
- Lubrication 21
- Cooling system - Fuel system 23
- Fuel system 24
- Supercharging 26

ENGINE 2959 cc 24v

- Characteristics 28
- Typical curves 29
- Cylinder block/crankcase, crankshaft and associated components 30
- Cylinder head assembly and valve gear components 34
- Lubrication 38
- Cooling system - Fuel system 39
- Fuel system 40

ENGINE 2387 TD

- Characteristics 42
- Typical curves 43
- Cylinder block/crankcase, crankshaft and associated components 44
- Cylinder head assembly and valve gear components 48
- Counter balance shafts 51
- Lubrication 52
- Cooling system - Fuel system 53
- Fuel system 54
- Supercharging 55

page

CLUTCH 56

GEARBOX AND DIFFERENTIAL 57

AUTOMATIC GEARBOX – DIFFERENTIAL (Z.F.) 59

BRAKING SYSTEM 60

STEERING 61

WHEELS 62

FRONT SUSPENSION 64

REAR SUSPENSION 65

ELECTRICAL EQUIPMENT 68

- Starting 68
- Recharging 70
- Electronic injection/ignition 72

SPECIAL TOOLS 75

TIGHTENING TORQUES 85

PLANNED MAINTENANCE 107

Copyright by Fiat Auto

COPYRIGHT Fiat Auto S.p.A.

Reproduction of all or part of the text and illustrations is prohibited.

The information in this publication is intended as a guide and could be superseded by modifications introduced by the Manufacturer at any time for technical and commercial reasons or in accordance with local regulations.

Fiat Auto S.p.A.
Direzione Marketing Commerciale
Direzione Post-Vendita - Servizi - Assistenziali
10134 TURIN (Italy) - Corso E. Giambone, 33
Print no. 506.475 - Ottobre 1994 - 500
Printed in Italy - Tip. Europrint - Torino



P3U001A01

3/4 front view

Copyright by Fiat Auto

	CHASSIS	ENGINE	VERSION	GEARBOX	
				5 speed	automatic
1998 20v Power Drive	ZLA 838.000	838 A1.000	838 AA 1AA	●	
1998 20v Comfort Drive			838 AA 1BA	●	
(▲) 1998 20v Comfort Drive		838 A6.000 (▲)	838 AG 1AA 00	●	
(▲) 1998 20v Power Drive			838 AG 1AA 00B 838 AG 1AA 00C (*)	●	
2446 20v		838 A2.000	838 AC 1AA 03 838 AC 1AA 03B (*)	●	
1995 16v turbo		838 A4.000	838 AB 1AA 02	●	
2959 V6 24v		838 B.000	838 AD 1AA 04	●	
			838 AD 11A 05		●
2387 TD		838 A3.000	838 AE 1AA	●	
		838 A7.000 (▲)	838 AH 1AA 06 (■) 838 AH 1AA 06B	●	

(▲) 96 range versions
(■) Version for specific markets (France)
(*) Voluntary for Germany

Vehicle type identification code and chassis manufacture number

Stamped on the floor panel of the passenger compartment, near the right front seat.
Access is gained by lifting the appropriate flap.

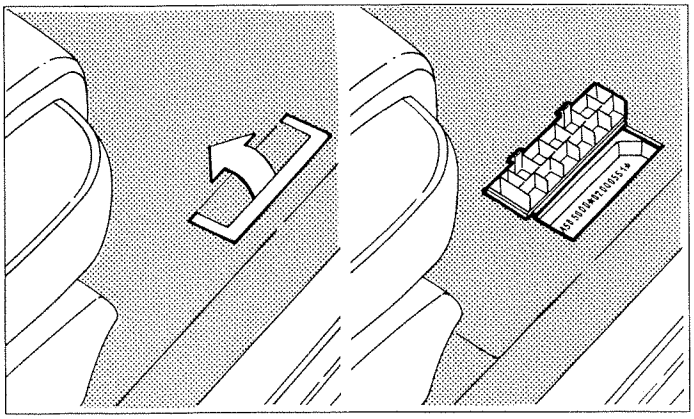

P3U002A01

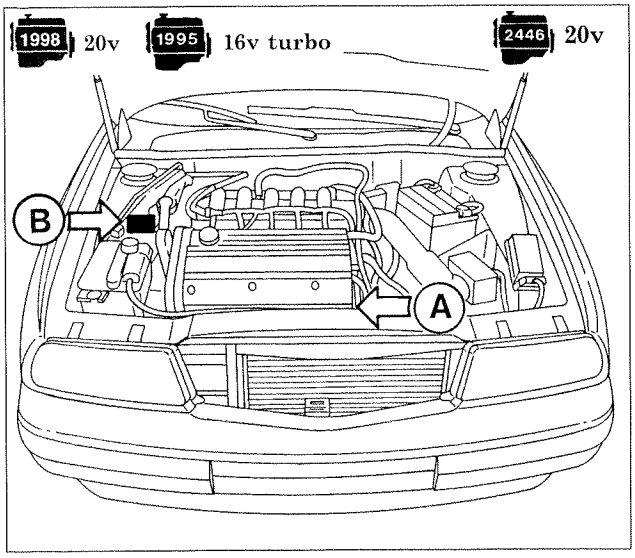

P3U003A01

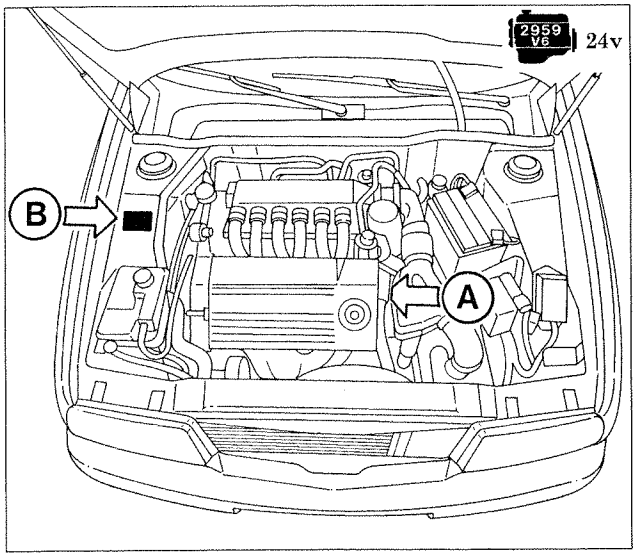

P3U003A02

A Engine type and number

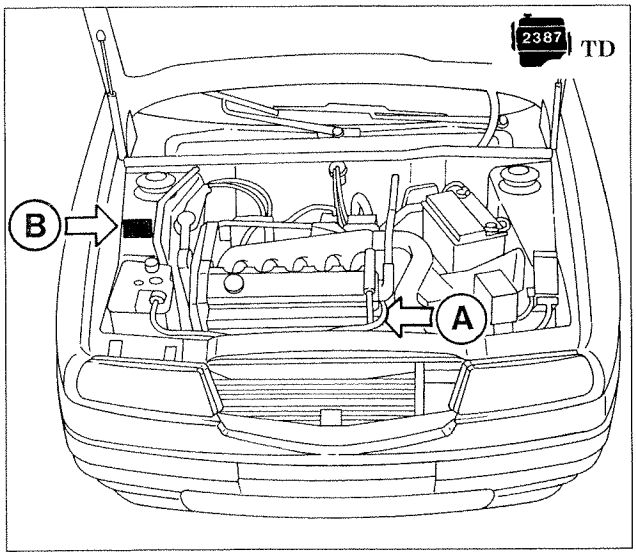

P3U003A03

B V.I.N. Plate (EEC regulations)

A. Name of manufacturer
B. Homologation number
C. Vehicle type identification code
D. Chassis manufacture number
E. Maximum authorized weight of vehicle fully laden
F. Maximum authorized weight of vehicle fully laden plus tow
G. Maximum authorized weight on first axle (front)
H. Maximum authorized weight on second axle (rear)
I. Engine type
L. Bodywork version code
M. Spares number
N. Correct value of smoke absorption coefficient (Diesel engines only)

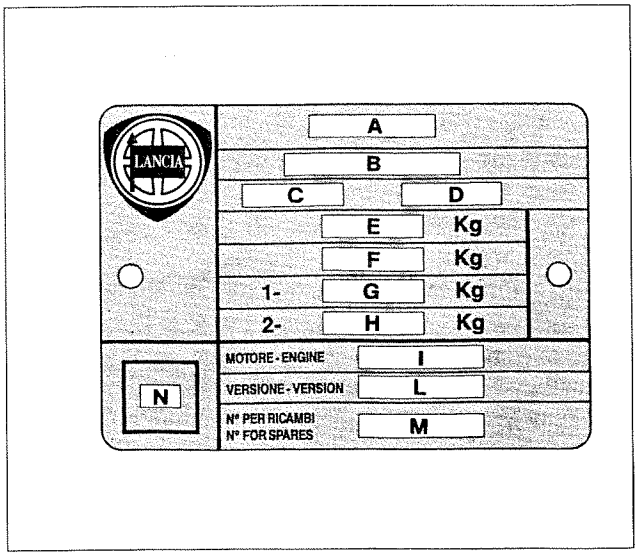

P3U003A04

(▲) 96 range version
(●) Power Drive Version

ENGINE TYPE		1998 20v	2446 20v	1995 16v turbo
GEARBOX		1 3 5 / 2 4 R	1 3 5 / 2 4 R	1 3 5 / 2 4 R
Speed kph (average load) 	1	56 (60▲) (50 ●) (54●▲)	56	51
	2	94 (101▲) (86 ●) (92●▲)	94	85
	3	155 (167▲) (125 ●) (136●▲)	139	141
	4	205 (212▲) (166 ●) (178●▲)	183	198
	5	190 (197▲) (205 ●) (212●▲)	215	235
	R	60 (64▲) (53 ●) (58●▲)	60	54
Maximum climable gradient fully laden		37		
Fuel consumption directive 93/116/CE (litres/100 km) 	Urban	13,8 - 14,7 (●) 13,8 (▲)-14,8 (●▲)	15,3	14,4
	Extra-urban	7,3 - 8,2 (●) 7,3 (▲)-8,3 (●▲)	8,3	7,9
	Combined	9,7 - 10,6 (●) 9,7 (▲)-10,7 (●▲)	10,9	10,3
CO_2 exhaust emissions (g/km)		230 - 252 (●) 230 (▲)-255 (●▲)	260	245

The fuel consumption figures according to directive 93/116/CE have been defined in the course of homologation tests involving:

- an urban cycle which includes a cold start followed by a varied urban cycle simulation.
- an extra-urban cycle which includes frequent acceleration in all the gears simulating the normal out of town usage of the vehicle. The speed varies between 0 and 120 kph.
- The combined consumption figure includes 37% of the urban cycle and 63% of the extra-urban cycle.

The type of journey, traffic conditions, driving styles, atmospheric conditions, trim level/equipment/accessories, whether a roof rack is fitted, the presence of special equipment and the general state of the vehicle can lead to fuel consumption figures which differ from those obtained through the above mentioned procedures.
The CO_2 exhaust emisssions (in g/km) are measured during the average combined cycle

(■) Version for specific markets (France)
(▲) 96 range version
(*) Only on request

ENGINE TYPE		2959 V6 24v		2387 TD
GEARBOX		1 3 5 / 2 4 R	(*)	1 3 5 / 2 4 R
Speed kph (average load)	1	66	–	37 - 32(▲) - 37(▲■)
	2	104	–	62 - 55(▲) - 62(▲■)
	3	152	–	103 - 91(▲) - 103(▲■)
	4	200	max 220	144 - 129(▲) - 144(▲■)
	5	225	–	193
	R	66	–	40 - 34(▲) - 40(▲■)
Maximum climable gradient fully laden		37		
Fuel consumption directive 93/116/CE (litres/100 km)	**Urban**	17,5	17,5	11,1 11,6 (▲) - 11,2 (▲■)
	Extra-urban	8,9	9,7	6,4 6,5 (▲) - 6,4 (▲■)
	Combined	12,1	12,6	8,1 8,4 (▲) - 8,2 (▲■)
CO_2 exhaust emissions (g/km)		288	300	215 - 223(▲) - 217(▲■)

The 93/116/CE directive fuel consumption figures have been defined in the course of homologation tests involving:

- an urban cycle which includes a cold start followed by a varied urban cycle simulation.
- an extra-urban cycle which includes frequent acceleration in all gears simulating normal out of town usage. The speed varies between 0 and 120 kph.
- The average combined consumption includes 37% of the urban cycle and 63% of the extra-urban cycle.

The type of journey, traffic conditions, driving styles, atmospheric conditions, trim level/equipment/accessories, whether a roof rack is fitted, the presence of special equipment and the general state of the vehicle can lead to fuel consumption figures which differ from those obtained through the above mentioned procedures.
The CO_2 exhaust emissions (in g/km) are measured during the average combined cycle

WEIGHTS (in kg)

ENGINE TYPE	1998 20v	2446 20v	1995 16v turbo	2959 V6 24v		2387 TD
GEARBOX	1 3 5 / 2 4 R	1 3 5 / 2 4 R	1 3 5 / 2 4 R	1 3 5 / 2 4 R	(●)	1 3 5 / 2 4 R
	1440/ 1490 (*)	1450/ 1500 (*)	1480/ 1500 (*)	1510/ 1530 (*)	1540/ 1550 (*)	1485/ 1500 (*)
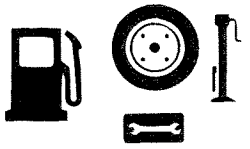 +500 = 	1940/ 1990 (*)	1950/ 2000 (*)	1980/ 2000 (*)	2010/ 2030 (*)	2040/ 2050 (*)	1985/ 2000 (*)
Maximum permissible loads on the axles ■ 	1180	1180	1180	1180	1180	1180
	1180	1180	1180	1180	1180	1180
Maximum permissible load on the roof	100	100	100	100	100	100
Load on the tow hook (trailer with braking system)	90	90	90	90	90	90
 Trailer without braking system	500	500	500	500	500	500
Trailer with braking system	1500	1500	1500	1500	1500	1500

■ Loads which must never be exceeded
● Only on request

NOTE FOR VERSIONS WITH ACCESSORIES: in the presence of special equipment (non standard air conditioner, sun roof, trailer towing device), the empty weight increases and therefore the carrying capacity may decrease, in relation to the maximum permissible loads.
(*) The first figure refers to the vehicle without optional equipment; the second with the entire range of optional equipment.

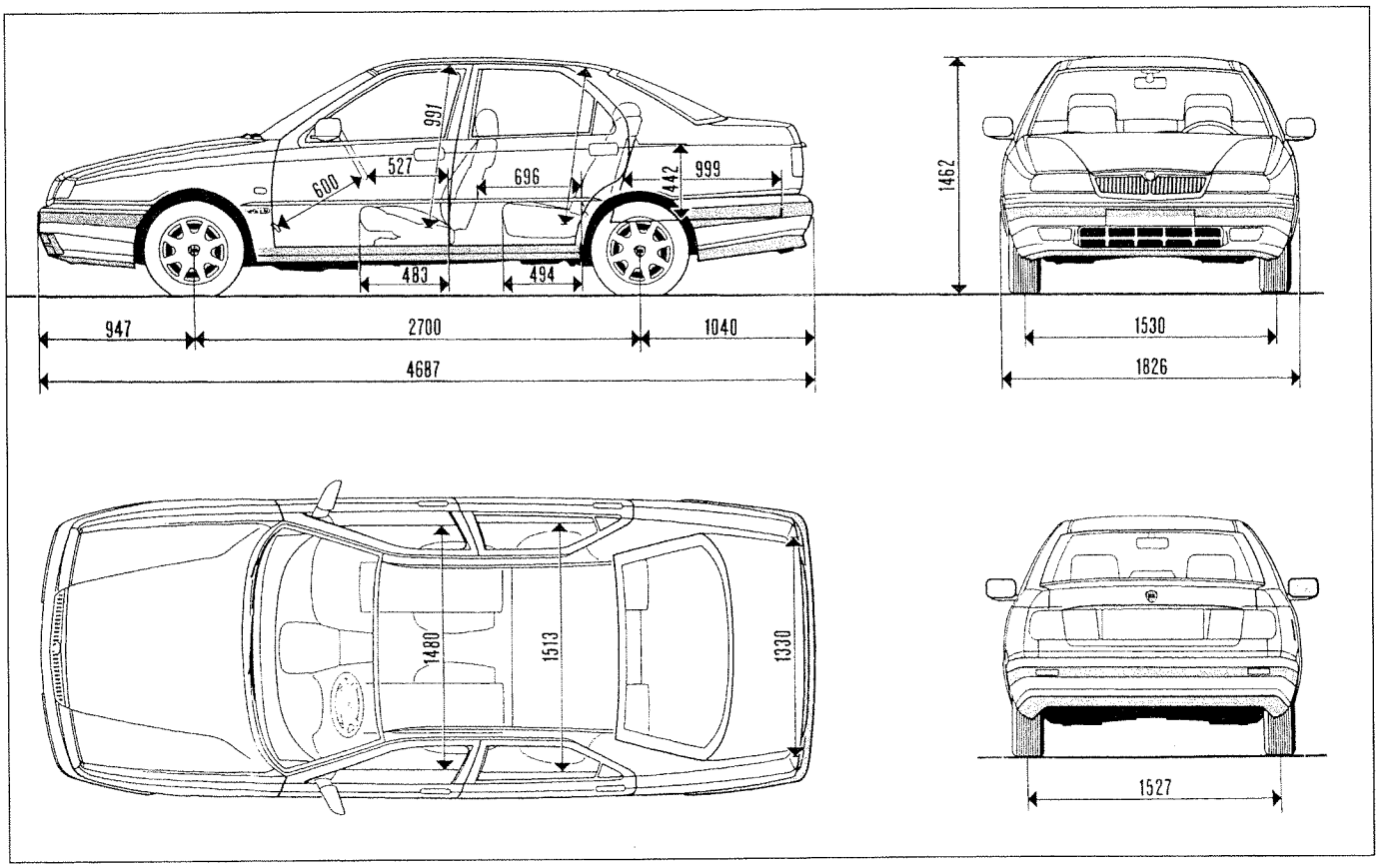

Luggage compartment capacity (VDA standards): 525 dm^3
The height refers to an unladen car

Capacities	Unit		Quantity dm³(l)	Quantity (kg)
Petrol O.R. 95 (●)		1998 20v - 2446 20v 1995 16 v turbo - 2959 V6 24v	70	–
Diesel		2387 td	70	–
50% + (▲)	Total capacity of cooling system	1998 20v 2446 20v 1995 16v turbo 2387 td	8,3	–
		2959 6V 24v	9	-
Petrol engines: SELENIA 20 K (SAE 10 W/40)	Total capacity	1998 20v - 2446 20v	6,5	5,8
		1995 16v turbo	7	6,25
		2959 V6 24v	7,5	6,7
		2387 td	7	6,25
Diesel engines: SELENIA Turbo Diesel (SAE 15 W/40)	Partial capacity (periodic replacement)	1998 20v - 2446 20v	5,4 5*	4,85 4,45*
		1995 16v turbo	5,5 5*	4,9 4,45*
		2959 V6 24v	6,9 6,5*	6,2 5,85*
		2387 td	5,4 5*	4,85 4,45*
a = TUTELA ZC 75 SYNTH b = TUTELA GI/A		a	2	1,80
		2959 V6 24v b	9,1 5**	8,2 4,5**
a = TUTELA GI/A	a	1998 20v - 2446 20v 1995 16 v turbo - 2387 TD	-	0,80 1,80 (□)
		2959 V6 24v	-	1,80
b = TUTELA MRM2	b		-	0,080
TUTELA TOP 4 270 °C	Total capacity of braking system and hydraulically op. clutch		-	0,5
AREXONS + DP1		3%	8	-
	– 20°C	50%		
	< - 20°C	100%	–	-

(▲) distilled water
(*) Engine sump only
(**) Periodic replacement
(●) Unleaded petrol only must be used
(□) 96 range versions

Name of product	Description International designation	Application
SELENIA 20 K SAE 10 W/40	Semi-synthetic multigrade engine oil. Exceeds specifications ACEA A3-96/CCMC G5 and API SH	Temperature - 25°C ÷ 40°C
VS MAX SAE 15 W/40	Mineral based multigrade engine oil. Exceeds specifications API SG, CCMC-G4 and UNI 20153	Temperature - 15°C ÷ 40°C
SELENIA Turbo Diesel SAE 15 W/40	Semisynthetic, multigrade engine oil. Exceeds specifications ACEA B3-96/CCMC PD2, API CD	Temperature - 15°C ÷ 40°C
VS MAX Diesel SAE 15 W/40	Multigrade, mineral based engine oil. Exceeds specifications API CD, CCMC and UNI 20153	Temperature - 15°C ÷ 40°C
TUTELA ZC 80S	SAE 80W EP oil. Satisfies standards MIL-L-2105 and API GL4	Manual gearboxes and differentials
TUTELA ZC 90	Non EP SAE 80 W/90 oil, for manual gearboxes, containing anti-wear additives.	Gearboxes and non hypoid differentials
TUTELA ZC 75 SYNTH	SAE 75 W EP synthetic oil Satisfies standards API GL.4 and MIL-L-2105	Manual gearboxes and differentials
TUTELA W 90/M DA	Special SAE 80 W/90 EP oil for normal and self-locking differentials. Satisfies standards MIL–L–2105 D and API GL5	Hypoid differentials Self-locking differentials Steering boxes
TUTELA GI/A	"DEXRON II " type oil for automatic transmissions.	Automatic gearboxes Power assisted steering
TUTELA CVT Universal	Oil for continuous variation automatic transmissions.	Continuous variation automatic transmissions
TUTELA JOTA 1	Lithium soap based grease, consistency NLGI = 1	Greasing the vehicle except for components particularly exposed to water requiring special greases
TUTELA MRM2	Water-repellant, lithium soap based grease containing molybdenum disulphide, consistency NLGI = 2	Constant velocity joints
TUTELA MR3	Lithium soap based grease, consistency NLGI= 3	Wheel hub bearings, st.rod, various comps.
TUTELA PLUS 3 (240 °C)	Synthetic fluid, F.M.V.S.S. n° 116 DOT 3 ISO 4925, CUNA NC 956-01	Hydraulic brakes and hydraulically op. clutches
TUTELA TOP 4 (270 °C)	Synthetic fluid, F.M.V.S.S. n° 116 DOT 4 ISO 4925, CUNA NC 956-01	Hydraulic brakes and hydraulically op. clutches
K 854	Lithium soap based grease, consistency NLGI = 000, containing molybdenum disulphide	Rack and pinion steering boxes
SP 349	Special grease compatible with brake fluid	Load proportioning valve Load proportioning valve rod bush
Arexons DP1	Mix of alcohol, H20 & surf. acting agents CUNA NC 956-11	To be used neat or diluted in windscreen washer systems
Paraflu[11]	Mono-ethylene glycol based anti-freeze for cooling system, CUNA NC 596 - 16	Cooling circuits Percentage to be used 50% up to - 35°C
Diesel Mix Arexons	Additive for diesel fuel with protective action for diesel engines	To be mixed with diesel fuel (25 cc per 10 litres)

Copyright by Fiat Auto

CHARACTERISTICS

		1998 20v	2446 20v	1995 16v turbo
	Cycle	OTTO 4 stroke		
	Timing	twin overhead camshaft		
	Engine balancing	through 1 counter-balance shaft		through 2 cntr balance shafts
	Type of fuel system	Bosch Motronic M2.10 integrated electronic injection/ignition	Bosch Motronic M2.10 integrated electronic injection/ignition	Bosch Motronic M2.7 integrated electronic injection/ignition
	Number of cylinders	5 in line		4 in line
	Cylinder liner (bore) mm	82	83	84
	Stroke mm	75,65	90,4	90
	Capacity cc	1998	2446	1995
	Compression ratio	10±0,15 / (▲) 10,4±0,15	10±0,15	8±0,15
Max power	kW (CEE)	107	(▲) 114	129	151
	(CV) (CEE)	(145)	(155)	(175)	(205)
	rpm	6100	(▲) 6500	6100	5600
Max torque	daNm (CEE)	18,5	(▲) 18,6	23	29,8
	(kgm) (CEE)	(18,9)	(19)	(23,5)	(30,4)
	rpm	4500	(▲) 4000	3750	2750

(▲) 96 range versions

1998 20v

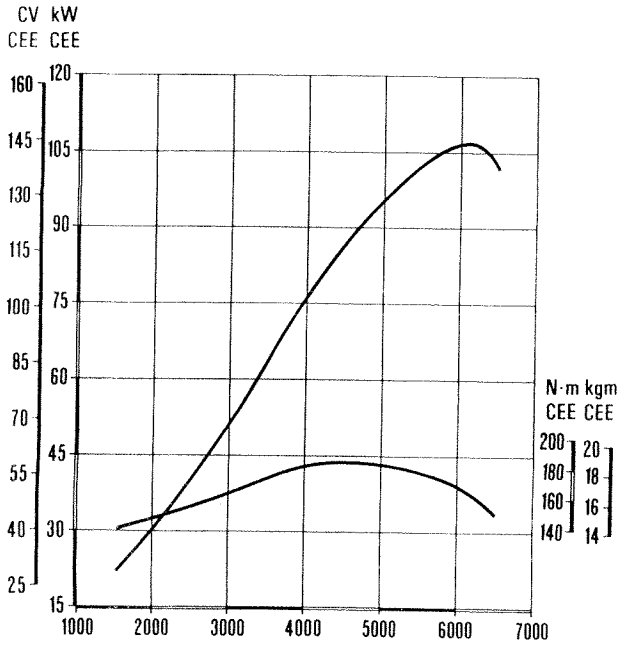

1998 20v (▲)

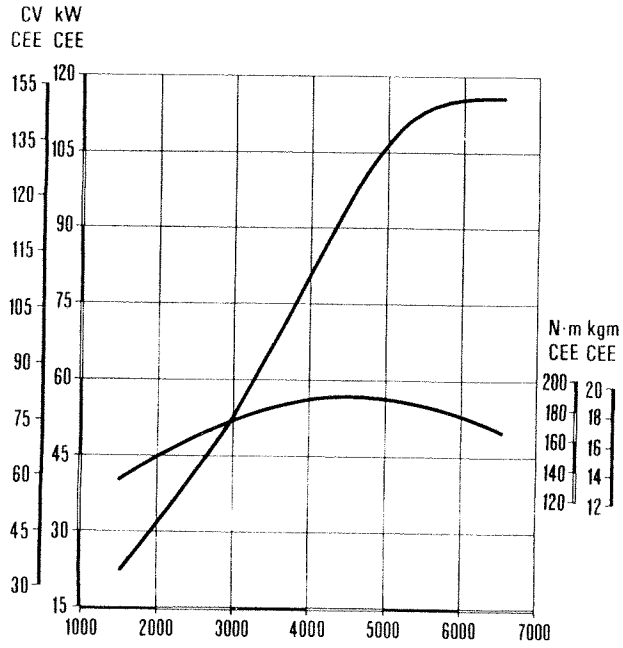

2446 20v

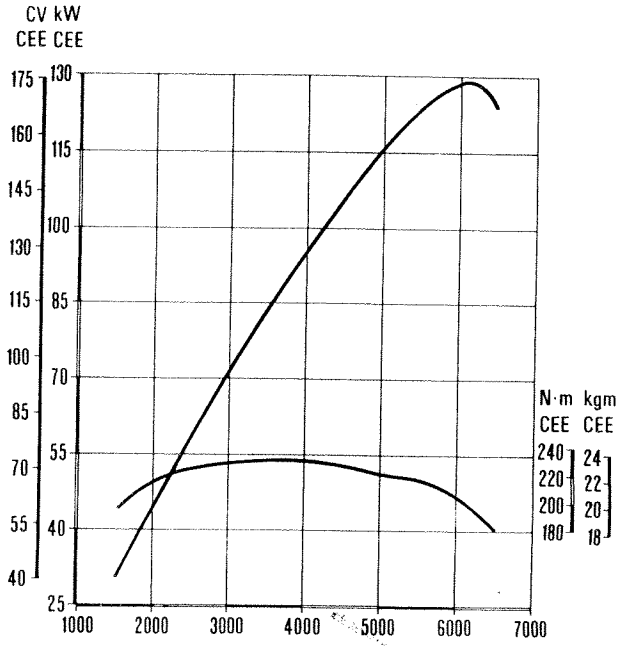

1995 16v turbo

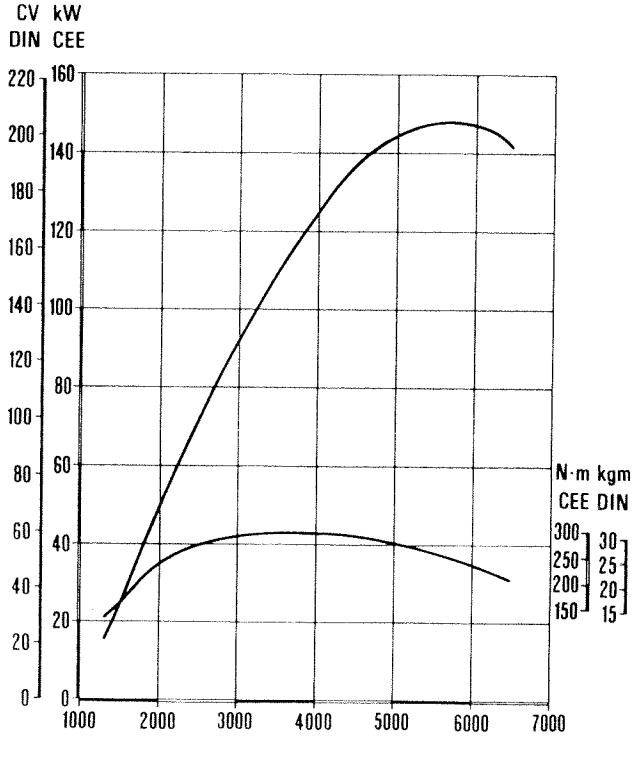

Typical engine curves

The power and torque curves illustrated can be obtained with the engine overhauled and run in (50 hours of operation) without a fan, with a silencer and air filter fitted at sea level.

(▲) 96 range version

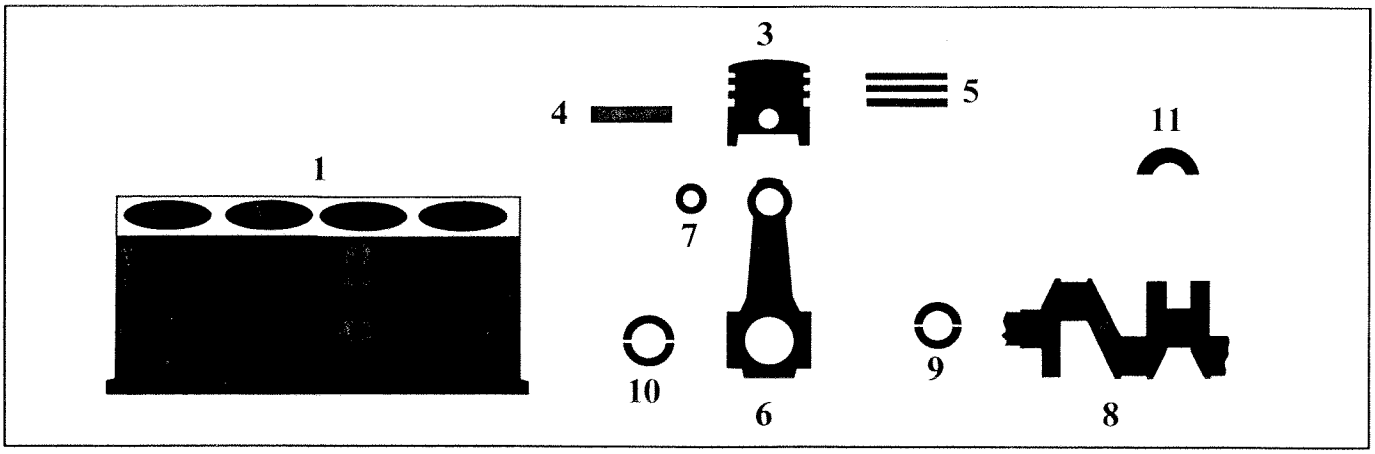

			1998 20v	2446 20v	1995 16v turbo
MASSE UND PASSUNGEN			Werte in mm		
1 Hauptlager		L	–		23,120-23,200
		L1	21,720-21,800		–
		1	63,705-63,718		56,729-56,735
		2			56,723-56,729
		3			56,717-56,723
Zylinderlaufbuchse		A	82,000-82,010	83,000-83,010	84,000-84,010
		B	82,010-82,020	83,010-83,020	84,010-84,020
		C	82,020-82,030	83,020-83,030	84,020-84,030
3 Kolben		Y	12,5		16,5
		A	81,952-81,962	82,952-82,962	83,940-83,950
		B	81,959-81,971	82,959-82,971	83,950-83,960
		C	81,968-81,978	82,968-82,978	83,960-83,970
	⌀ LANCIA >		0,4		
3	Gewichtsabweichung Kolben		± 5 g		
3-1 Kolben Zylinderlaufbuchse		A	0,038-0,058		0,050-0,070
		B	0,039-0,061		
		C	0,042-0,062		

DESCRIPTION		1998 20v	2446 20v	1995 16v turbo
		Values in mm		
3 Gudgeon pin housing	⌀ 1	20,002 ÷ 20,007		21,996 ÷ 21,999
	⌀ 2			21,999 ÷ 22,002
3 Piston ring grooves	1	1,520 ÷ 1,540	1,220 ÷ 1,240	1,535 ÷ 1,555
	2	1,510 ÷ 1,530		
	3	3,010 ÷ 3,030		
4 Gudgeon pin	⌀ 1	19,996 ÷ 20,000		21,991 ÷ 21,994
	⌀ 2			21,994 ÷ 21,997
	⌀ LANCIA >	0,2		
4-3 Gudgeon pin - Housing		0,002 ÷ 0,011		0,002 ÷ 0,008
5 Piston rings	L 1	1,475 ÷ 1,490	1,170 ÷ 1,190	1,470 ÷ 1,490
	L 2	1,475 ÷ 2,490		1,478 ÷ 1,490
	L 3	2,975 ÷ 2,990		
	⌀ LANCIA >	0,4		
5-1 Opening at end of piston rings in cylinder bore	1	0,300 ÷ 0,500	0,250 ÷ 0,500	0,200 ÷ 0,450
	2	0,300 ÷ 0,500		
	3	0,250 ÷ 0,500		
5-3 Piston rings Piston ring grooves	1	0,030 ÷ 0,065	0,030 ÷ 0,070	0,045 ÷ 0,085
	2	0,020 ÷ 0,055		0,020 ÷ 0,052
	3	0,020 ÷ 0,055		

Copyright by Fiat Auto

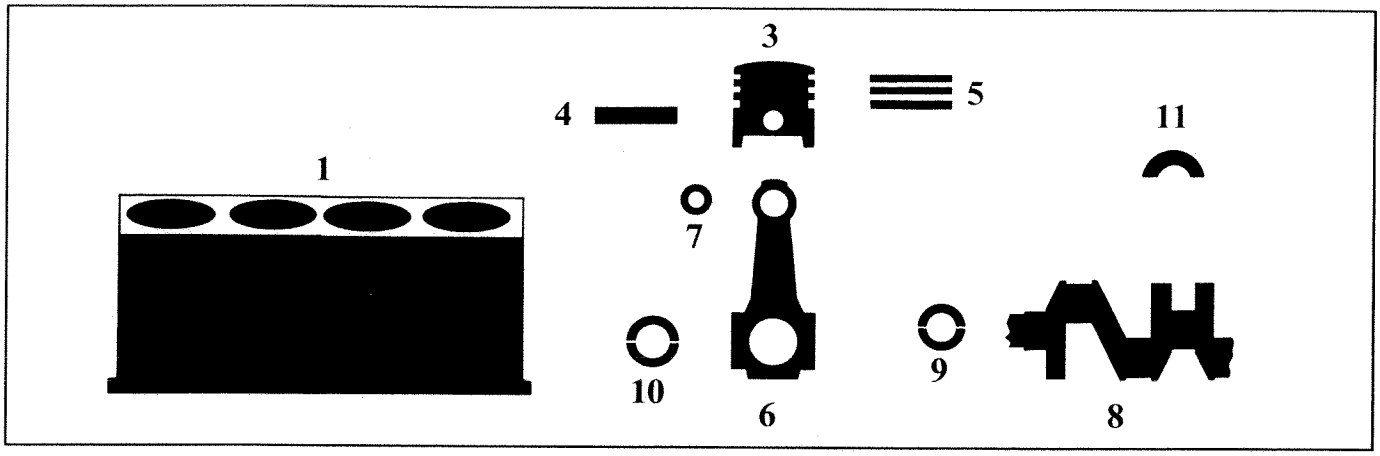

DESCRIPTION			1998 20v	2446 20v	1995 16v turbo
			Values in mm		
6	Small end bush or pin housing	$\varnothing_1$	22,939 ÷ 22,972		24,988 ÷ 25,021
	Big end bearing housing	$\varnothing_2$ 1	51,354 ÷ 51,366	53,897 ÷ 53,909	53,904 ÷ 53,910
		$\varnothing_2$ 2			53,898 ÷ 53,904
		$\varnothing_2$ 3			53,892 ÷ 53,898
7	Small end bush	$\varnothing_1$	23,007 ÷ 23,027		25,065 ÷ 25,090
		$\varnothing_2$ 1	22,004 ÷ 22,007		22,004 ÷ 22,007
		$\varnothing_2$ 2			22,007 ÷ 22,010
4-7	Gudgeon pin Small end bush		0,006 ÷ 0,016		0,010 ÷ 0,016
7-6	Small end bush Bush housing		0,034 ÷ 0,073		0,044 ÷ 0,102
8	Main journals	$\varnothing_1$ A	59,994 ÷ 60,000		52,998 ÷ 53,004
		$\varnothing_1$ B	59,988 ÷ 59,994		52,992 ÷ 52,998
		$\varnothing_1$ C	59,982 ÷ 59,988		52,896 ÷ 52,992
	Crank pins	$\varnothing_2$ A	48,238 ÷ 48,244	50,799 ÷ 50,805	50,799 ÷ 50,805
		$\varnothing_2$ B	48,232 ÷ 48,238	50,793 ÷ 50,799	50,793 ÷ 50,799
		$\varnothing_2$ C	48,226 ÷ 48,232	50,787 ÷ 50,793	50,787 ÷ 50,793
		L	–		27,975 ÷ 28,025
		L1	26,575 ÷ 26,625		–

DESCRIPTION		1998 20v	2446 20v	1995 16v turbo
		Values in mm		
9 Crankshaft bearings	L A	1,836 ÷ 1,840		1,838 ÷ 1,844
	L B	1,839 ÷ 1,843		1,844 ÷ 1,850
	L C	1,842 ÷ 1,846		1,850 ÷ 1,856
	⌀ LANCIA <	0,254 - 0,508		
9–8	Crankshaft bearings - Main journals	0,025 ÷ 0,052		0,025 ÷ 0,049
10 Big end bearings	L A	1,536 ÷ 1,540	1,527 ÷ 1,531	1,531 ÷ 1,537
	L B	1,539 ÷ 1,543	1,530 ÷ 1,534	1,537 ÷ 1,543
	L C	1,542 ÷ 1,546	1,533 ÷ 1,537	1,543 ÷ 1,549
	⌀ LANCIA <	0,254 ÷ 0,508		
10–8	Big end bearings - Main journals	0,030 ÷ 0,056		0,025 ÷ 0,049
11	Thrust washers S	2,342 ÷ 2,358		2,347 ÷ 2,363
	S LANCIA >	0,127		
11–8	Crankshaft end float	0,059 ÷ 0,211		0,049 ÷ 0,211

Technical data

Engine: counter balance s

00.10

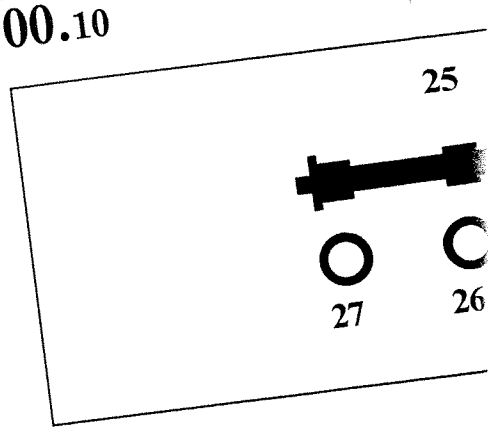

DESCRIPTION	
25	Counter balance shaft o
26	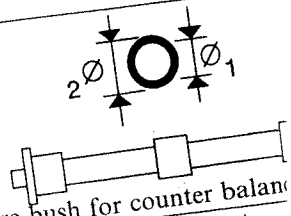 Centre bush for counter balan
27	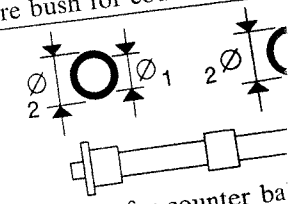 Ball bearings for counter ba
25	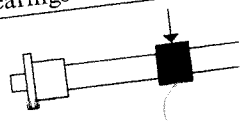 Counter balance shaft cen
25	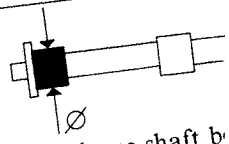 Counter balance shaft b
1	Bearing seats i Bush housing
26-1	
25-26	
27-1	
25-27	

DESCRIPTION		1998 20v	2446 20v	1995 16v turbo
		Values in mm		
9 Crankshaft bearings	L A	1,836 ÷ 1,840		1,838 ÷ 1,844
	L B	1,839 ÷ 1,843		1,844 ÷ 1,850
	L C	1,842 ÷ 1,846		1,850 ÷ 1,856
	⌀ LANCIA <	0,254 - 0,508		
9–8 Crankshaft bearings - Main journals		0,025 ÷ 0,052		
10 Big end bearings	L A	1,536 ÷ 1,540	1,527 ÷ 1,531	1,531 ÷ 1,537
	L B	1,539 ÷ 1,543	1,530 ÷ 1,534	1,537 ÷ 1,543
	L C	1,542 ÷ 1,546	1,533 ÷ 1,537	1,543 ÷ 1,549
	⌀ LANCIA <	0,254 ÷ 0,508		
10–8 Big end bearings - Main journals		0,030 ÷ 0,056		0,025 ÷ 0,049
11 Thrust washers	S	2,342 ÷ 2,358		2,347 ÷ 2,363
	S LANCIA >	0,127		
11–8 Crankshaft end float		0,059 ÷ 0,211		0,049 ÷ 0,211

Copyright by Fiat Auto

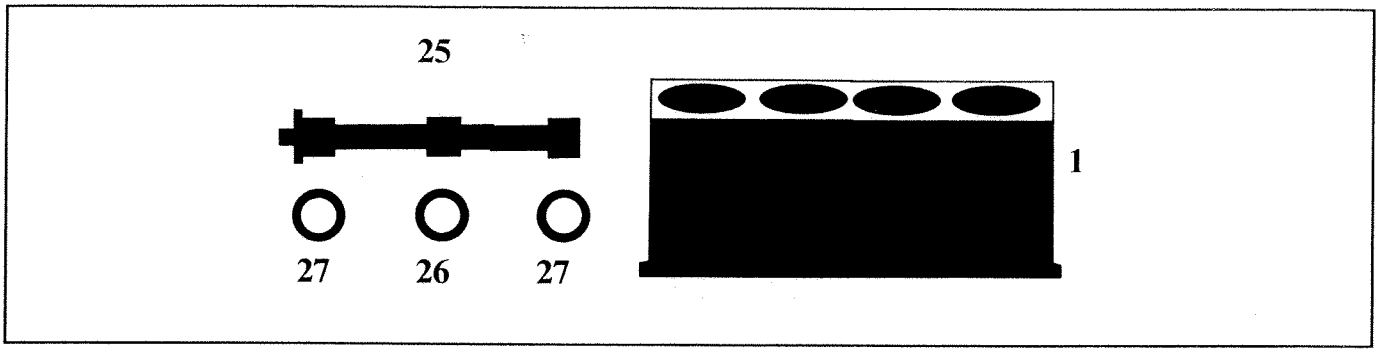

DESCRIPTION			1998 20v	2446 20v	1995 16v turbo
			Values in mm		
25	Operation of counter-balance shafts		through oil pump driven gear		by toothed belt
26	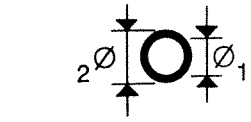 Centre bush for counter balance shafts in housing	Ø1	–		37,020 ÷ 37,040
		Ø2	–		40,089 ÷ 40,129
27	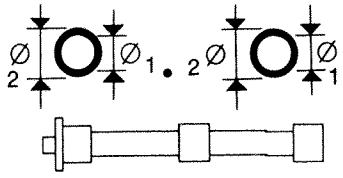 Ball bearings for counter balance shafts	Ø1	19,900 ÷ 20,000		
		Ø2	46,989 ÷ 47,000		
25	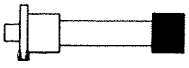 Centre journal for counter balance shafts	Ø	–		36,945 ÷ 36,960
25	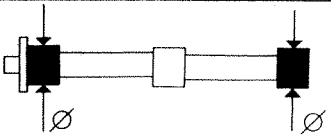 Counter balance shaft bearings	Ø	19,980 ÷ 19,993		
1	Bearing seats in crankcase	Ø	46,975 ÷ 47,000		
	Bush housing in crankcase	Ø	–		39,979 ÷ 40,009
26-1	Bush for shaft Crankcase housing		–		0,080 ÷ 0,140
25-26	Shaft bearing - Bush		–		0,060 ÷ 0,095
27-1	Ball bearings Cylinder block seats		+0,011 ÷ −0,025		
25-27	Shaft bearings Ball bearings		+0,020 ÷ −0,003		

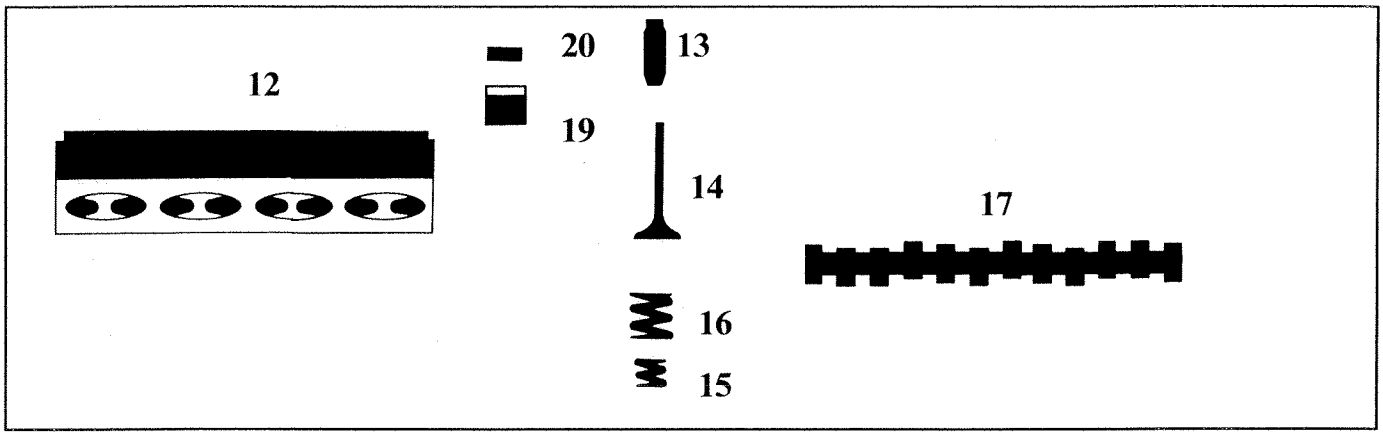

DESCRIPTION			1998 20v	2446 20v	1995 16v turbo
			Values in mm		
	Valve guide bore in cylinder head	∅	12,950 ÷ 12,977		13,950 ÷ 13,977
12 a	Valve bore	α	45° ± 5'		
		α	45° ± 5'		
		L	about 2		
	Volume of combustion chamber in cylinder head	cm^3	39	38,2	40,6
13	Valve guide	$∅_1$	7,022 ÷ 7,040		
		$∅_2$	13,010 ÷ 13,030		14,010 ÷ 14,030
		$∅_2$ LANCIA >	0,05 - 0,10 - 0,25		
13-12 a	Valve guide Bore in cylinder head		0,033 ÷ 0,080		
14	Valves	$∅_1$	6,975 ÷ 6,990		6,974 ÷ 6,992
		$∅_2$	29,900 ÷ 30,200	33,400 ÷ 33,700	27,300 ÷ 27,500
		α	45° 30' ± 5'		
		$∅_1$	6,960 ÷ 6,975		6,974 ÷ 6,992
		$∅_2$	25,900 ÷ 26,200	27,900 ÷ 28,200	29,300 ÷ 29,500
		α	45°30' ± 5'		

Copyright by Fiat Auto

DESCRIPTION		1998 20v	2446 20v	1995 16v turbo
		Values in mm		
14-13 Valve guide		0,032 ÷ 0,065		0,030 ÷ 0,066
		0,047 ÷ 0,080		0,030 ÷ 0,066
15 Internal valve spring	P_1	11,08 ÷ 12,07 daN		14,12 ÷ 15,10 daN
	H_1	29,5		31
	P_2	21,58 ÷ 23,54 daN		26,39 ÷ 28,74 daN
	H_2	20		21,5
16 External valve spring	P_1	27,07 ÷ 29,43 daN		36,68 ÷ 39,60 daN
	H_1	34		36
	P_2	48,46 ÷ 53,38 daN		55,91 ÷ 60,82 daN
	H_2	24,5		26,5
17 Camshaft bearings	∅	26,,000 ÷ 26,015		28,480 ÷ 28,495
	L(●)	–		19,970 ÷ 19,750
	L_1(●)	19,250 ÷ 26,015		–
Cam lift		8	8,75	8,6
		8	8,75	8,6
12 Camshaft supports in cylinder head	∅	26,045 ÷ 26,070		28,545 ÷ 28,570
	L*	–		19,520 ÷ 19,570
	L_1*	19,100 ÷ 19,150		–
	∅	33,000 ÷ 33,025		37,000 ÷ 37,025
17-12 Camshaft bearings	radial	0,030 ÷ 0,070		0,050 ÷ 0,090
Camshaft housing supports	axial	0,100 ÷ 0,230		

* Measurement of cap (●) Measurement of bearing

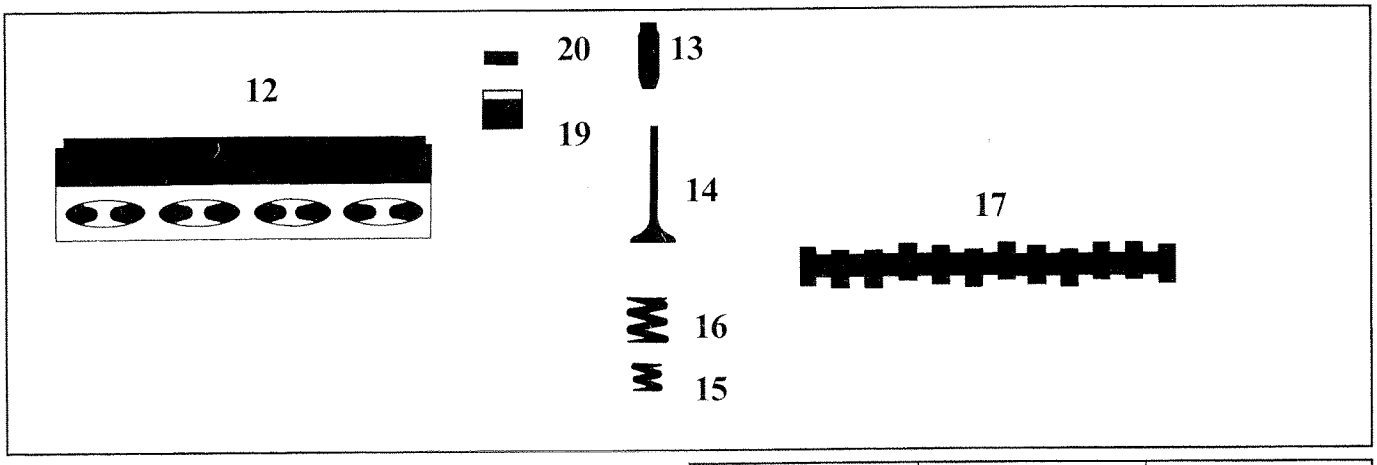

DESCRIPTION			1998 20v	2446 20v	1995 16v turbo
			Values in mm		
19	Tappet	∅	32,959 ÷ 32,975		36,975 ÷ 36,995
19-12	Tappet Housing in cylinder head		0,025 ÷ 0,066		0,005 ÷ 0,050
20	Shim	S (0,05)	–		3,25 ÷ 4,70
17-20	clearance for timing check		0,45		0,80
			0,45		0,80
	operational clearance		Hydraulic tappets		0,38 ± 0,04
			Hydraulic tappets		0,43 ± 0,04

Copyright by Fiat Auto

TIMING DIAGRAMS

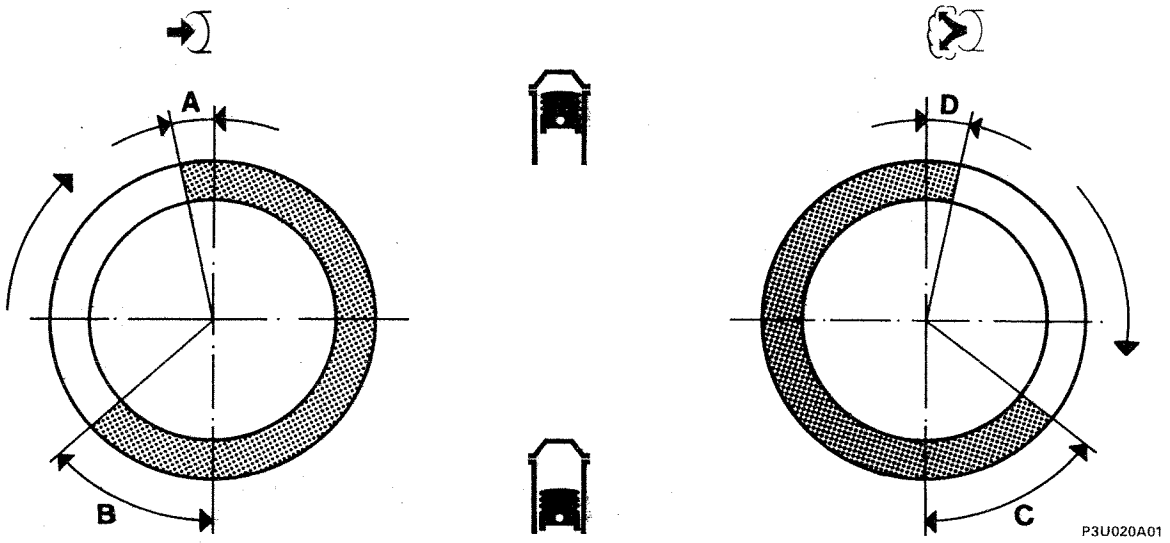

TIMING ANGLES

		1998 20v	1998 (▲) 20v	2446 20v	1995 16v turbo
A — Inlet	opens BTDC	15° after TDC (*) 3° (**)	9° after TDC (*) 9° (**)	1° after TDC (*) 17° (**)	0°
B — Inlet	closes ABDC	44° (*) 26° (**)	49° (*) 31° (**)	47° (*) 29° (**)	43°
C — Exhaust	opens BBDC	27°	40°	44°	43°
D — Exhaust	closes ATDC	2°	0°	2°	0°

(*) With low engine load

(**) With high engine load and consequent intervention of the phase transformer

(▲) 96 range versions

	1998 20v	2446 20v
LUBRICATION	Values in mm	
Engine lubrication system	forced feed, via geared pump with cartridge oil filter in series	
Oil pump	geared, located in the crankshaft front cover	
Pump operated	by chain driven by crankshaft	
Oil pressure relief valve	incorporated in crankshaft front cover	
Full flow filter	cartridge	
Insufficient oil pressure sender unit	electrical	
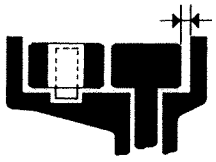 between the edge of the gears and the pump casing	0,110 ÷ 0,180	
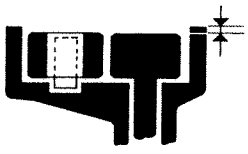 between the upper side of the gears and the pump cover	0,016 ÷ 0,086	
 between the drive gear and the driven gear	0,30	
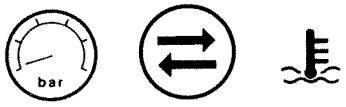 Operating pressure at a temperature of 100°C	idling 1 bar at 4000 rpm 4 bar	
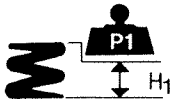 Oil pressure relief valve spring	P_1	11,73 ÷ 12,51
	H_1	35

Copyright by Fiat Auto

	1995 16v turbo
LUBRICATION	Values in mm
Engine lubrication system	forced feed, via geared pump with cartridge filter in series
Oil pump	gears
Pump operated	through crankshaft
Oil pressure relief valve	incorporated in the cover crankshaft front cover
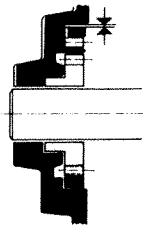 between pump casing housing and driven gear	0,080 ÷ 0,186
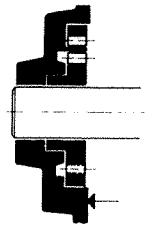 between the upper side of the gears and the pump cover	0,025 ÷ 0,056
Full flow filter	cartridge
Insufficient oil pressure sender unit	electrical
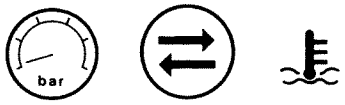 Operating pressure at a temperature of 100°C	idling 1,1 bar at 4000 rpm 5,5 bar
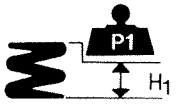 Oil pressure relief valve spring — P_1	11,26 ÷ 18,08 daN
Oil pressure relief valve spring — H_1	35,3

COOLING SYSTEM

			1998 20v	2446 20v	1995 16v turbo
Cooling circuit			coolant circulation via centrifugal pump, radiator and two speed electrical fan operated by thermostatic switch		
Water pump operation			through belt		
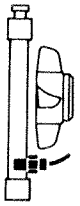 Thermal switch to engage fan	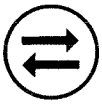	1st stage	90° ÷ 94°C		86° ÷ 90°C
		2nd stage			90° ÷ 94°C
		1st stage	85° ÷ 89°C		81° ÷ 85°C
		2nd stage			85° ÷ 89°C
Engine coolant thermostat		opening	81° ÷ 85°C		
		max opening	99° ÷ 103°C		
		valve travel	9,5 mm		
Clearnace betweem impeller vanes and pump casing			-		0,6 ÷ 1 mm
Pressure for checking system water tightness			0,98 bar		
Pressure for checking exhaust valve on expansion tank cap			0,98 bar		

FUEL SYSTEM

	Bosch Motronic M2.10 integrated electronic injection/ignition	Bosch Motronic M2.10 integrated electronic injection/ignition	Bosch Motronic M2.7 integrated electronic injection/ignition
Type			
Pump	electrical		
Capacity	⩾ 120 l/h		
Calibration of fuel pressure regulator	3 bar		

Checking idle concentration of pollutant emissions

	CO (%)	HC (p.p.m)	CO_2 (%)
Upstream of the catalytic converter	0,4 ÷ 1	⩽600	⩾ 12
Downstream of the catalytic converter	⩽0,35	⩽90	⩾ 13

Copyright by Fiat Auto

BOSCH MOTRONIC M2.10 INTEGRATED INJECTION/IGNITION FOR 1998 20v AND 2446 20v ENGINE TYPES SYSTEM COMPONENTS

	1998 20v	2446 20v	2446 (▲) 20v
Injection/ignition system electronic control unit	0.261.203.670 B.261.623.053 (▲)	0.261.203.669	
Butterfly casing	60 NCFL 5		
Fuel pressure regulator	0.280.160.515		
Injector	B.280.709.744		0.280.150.443
Idle adjustment actuator	B.582.001.263		0.280.140.553
Electric fuel pump	0.580.453.979		
Air flow meter	0.280.217.106		
Fuel filter	A.450.044.239		
Butterfly valve position sensor (potentiometer)	0.280.122.001		
Coolant temperature sensor	0.280.130.026		
Lambda sensor	B.258.562.081		0.258.003.772
Fuel vapour solenoid valve	0.280.142.300		
Detonation sensor	0.261.231.007 0.261.231.095 (▲)		
Injection timing sensor	B.232.070.023		0.232.101.026
Intake air temperature sender unit	0.280.130.073		
TDC and rpm sensor	0.261.210.119		

(▲) 96 range versions

BOSCH M2.7 INTEGRATED INJECTION/IGNITION SYSTEM FOR 1995 16v TURBO ENGINE COMPONENTS

	1995 16v turbo	(▲) 1995 16v turbo
Injection/ignition system electronic control unit	0.261.203.792	
Butterfly casing	52 CFL 125	
Fuel pressure regulator	A.280.550.058	
Injector	B.280.709.305/1	0.280.150.450
Idle adjustment actuator	0.280.140.505	
Electric fuel pump	0.580.453.980	
Detonation sensor	0.261.231.095	
Fuel filter	A.450.044.239	
Fuel filter	0.280.101.001	
Butterfly valve position sensor (potentiometer)	0.280.122.001	
Coolant temperature sensor	0.280.130.026	
Waste gate solenoid valve (Pierburg)	7.21493.00	
Electric fuel pump relay feed	0.322.014.140	
Lambda sensor	B.258.742.081	0.286.003.722
Injection/ignition system control unit relay feed	0.332.014.140	
Fuel vapour solenoid valve	0.280.142.300	0.280.142.301
Air flow meter	B.280.151.676	0.280.213.025
Intake air temperature sender unit	0.280.130.060	
TDC and rpm sensor	0.261.210.093	

(▲) 96 range versions

Copyright by Fiat Auto

00.10

SUPERCHARGING

Turbocharger operated by exhaust gases, cooled by engine coolant and with waste gate valve and air/air heat exchanger

	1995 16v turbo
Turbocharger: type	Garrett T25
Maximum supercharging pressure	1,1 bar

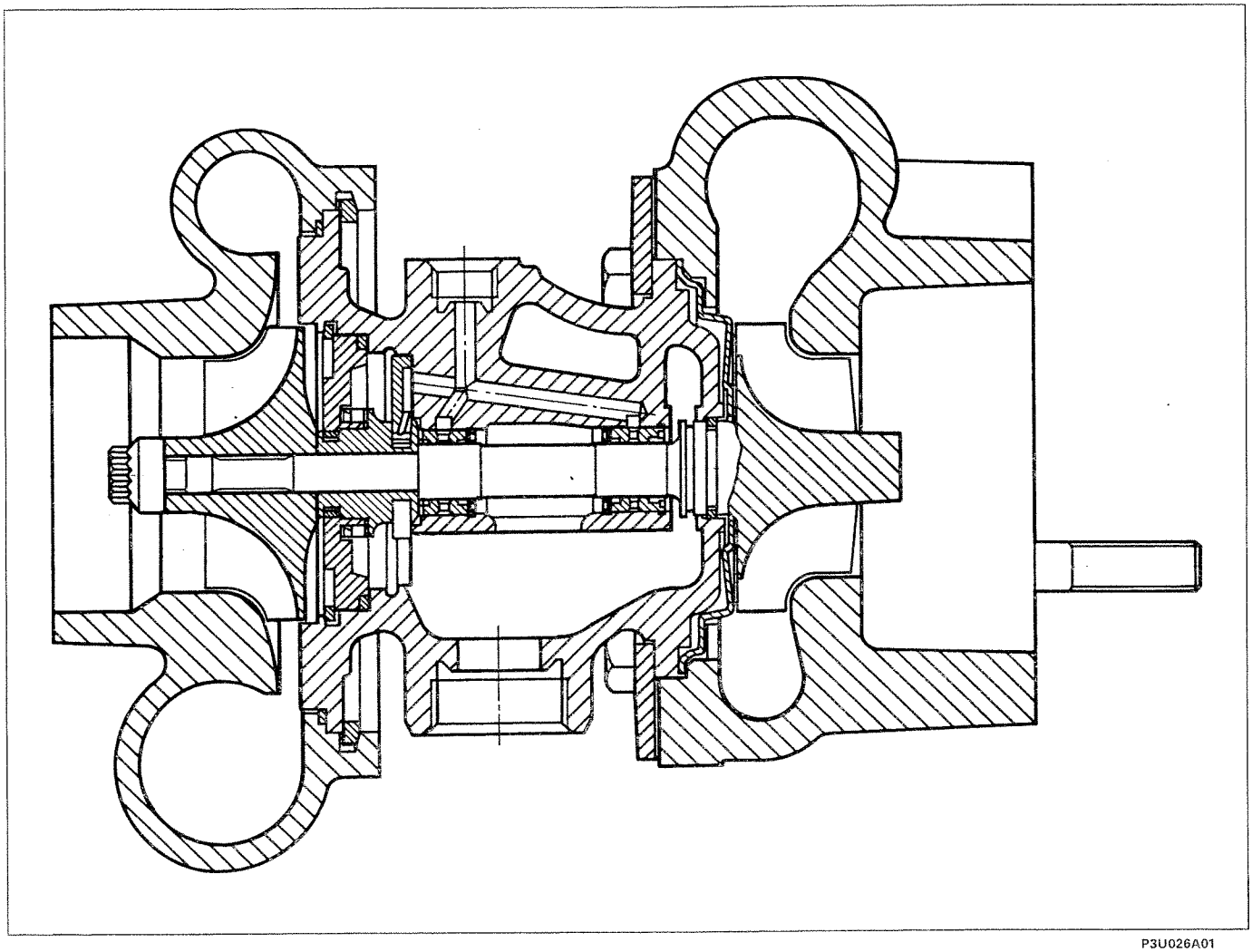

P3U026A01

CROSS SECTION OF TURBOCHARGER

LONGITUDINAL SECTION OF ENGINE 2387 TD

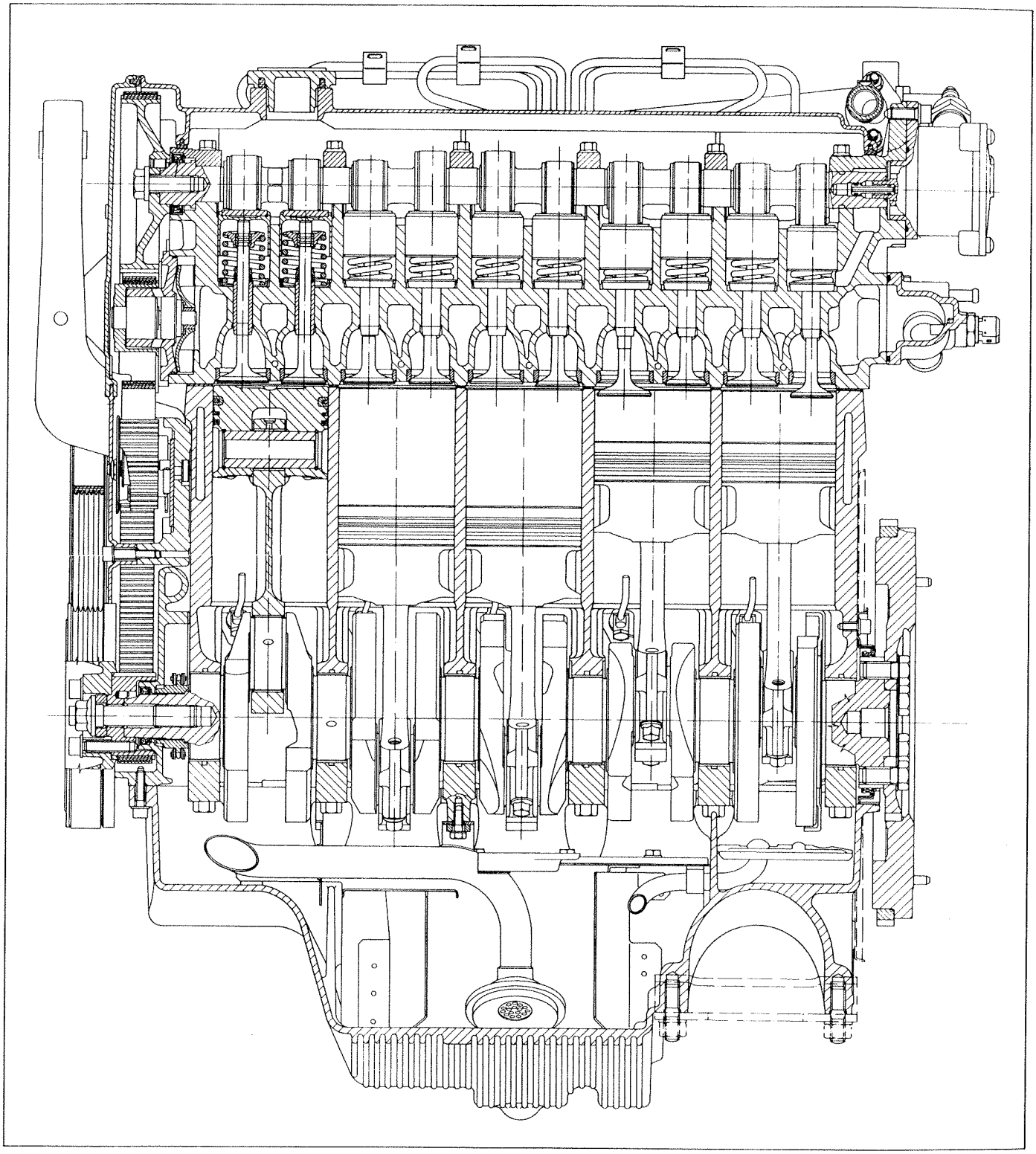

P3U027A01

Copyright by Fiat Auto

CHARACTERISTICS

		2959 V6 24v
	Cycle	OTTO 4 stroke
	Timing	2 camshafts for each cylinder head
	Type of fuel system	Bosch Motronic M3.7 injection/ignition system
	Number of cylinders	6 in 60° V
	Cylinder liner (bore) mm	93
	Stroke mm	72,6
	Capacity cc	2959
	Compression ratio	10
Max power	kW (CEE) (CV) (CEE)	150 (204)
	rpm	6300
Max torque	daNm (CEE) (kgm) (CEE)	27 (27,5)
	rpm	4500

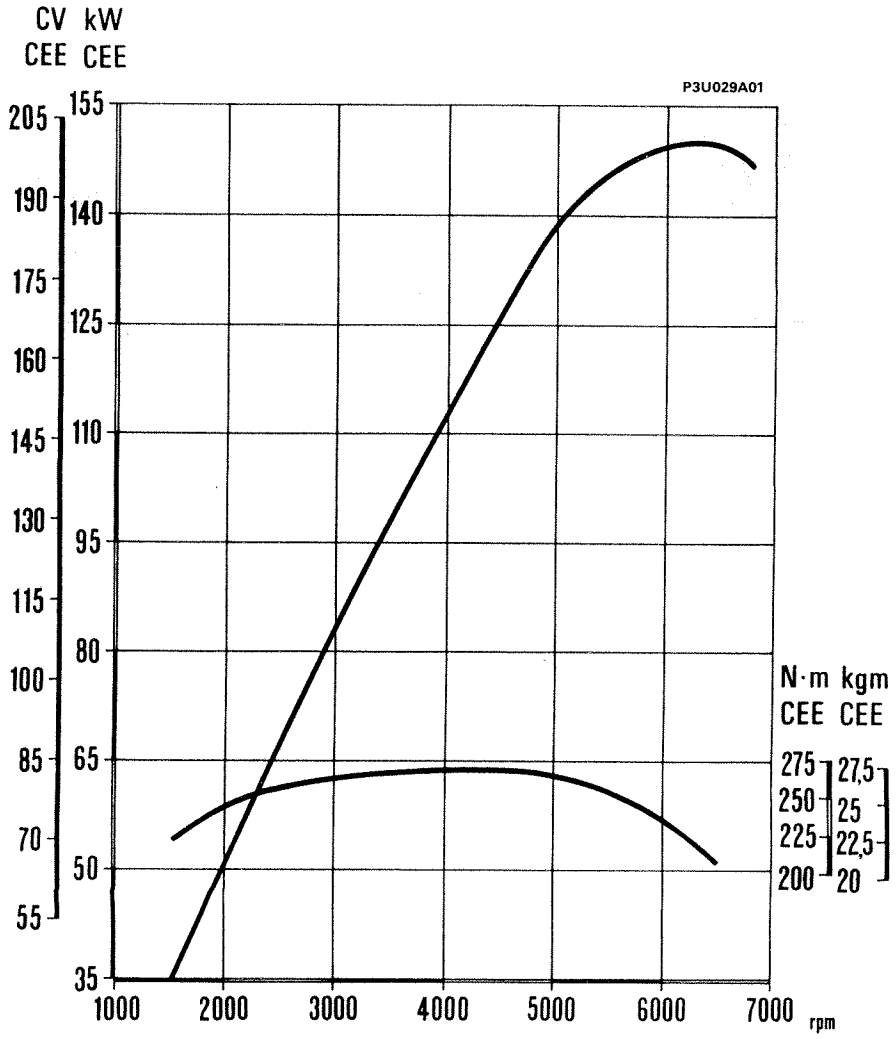

Typical engine curves

The power curve illustrated can be obtained with the engine overhauled and run in (50 hours of operation),), without a fan, with a silencer and air filter fitted, at sea level.

Copyright by Fiat Auto

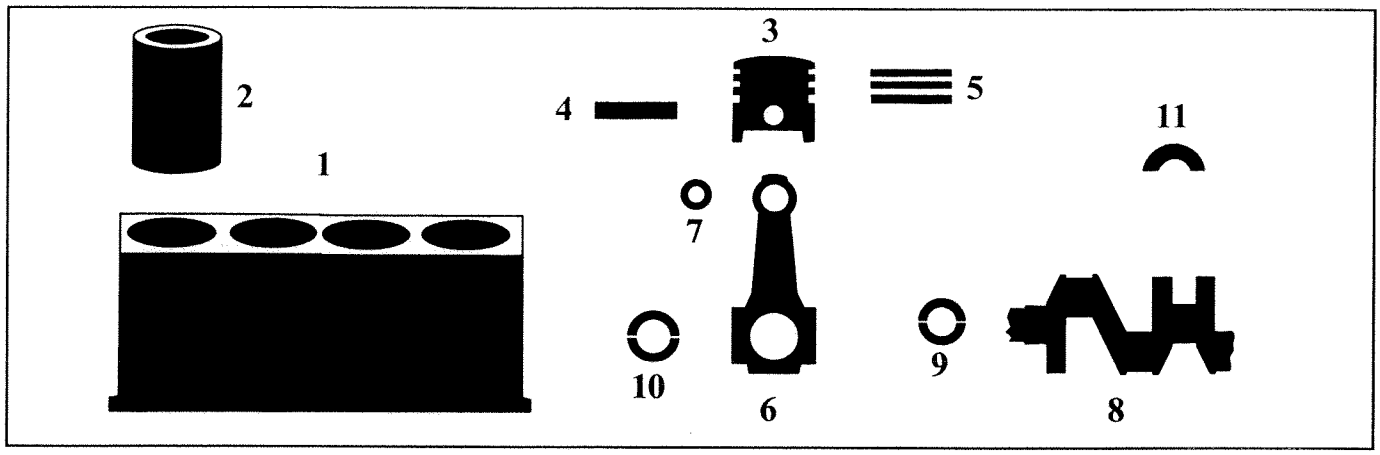

DESCRIPTION		Values in mm
1 Main bearing supports	L	26,450 ÷ 26,500
	A red	63,657 ÷ 63,663
	B blue	63,663 ÷ 63,669
	C green	63,669 ÷ 63,675
1 Cylinder liner bore	Ø	99,034 ÷ 99,058
2 Cylinder liner	A blue	92,985 ÷ 92,994
	B pink	92,995 ÷ 93,004
	C green	93,005 ÷ 93,014
	Ø2	98,975 ÷ 99,000
2-1 Cylinder liner projection	Ø	0,01 ÷ 0,06

DESCRIPTION		Values in mm
3 Piston	X	14
	⌀ A blue	92,925 ÷ 92,935
	⌀ B pink	92,935 ÷ 92,945
	⌀ C green	92,945 ÷ 92,955
	⌀ LANCIA >	–
3 Gudgeon pin housing	Black	22,003 ÷ 22,006
	White	22,006 ÷ 22,009
3 Piston ring grooves	1	1,525 ÷ 1,545
	2	1,525 ÷ 1,545
	3	3,515 ÷ 3,535
3	Difference in weight between pistons	⩽4 g
3-2	Piston - Cylinder bore	0,050 ÷ 0,069
4 Gudgeon pin	Black	21,994 ÷ 21,997
	White	21,997 ÷ 22,000
	⌀ LANCIA >	–
4-3	Gudgeon pin - Housing	0,006 ÷ 0,012
5 Piston rings	L 1	1,475 ÷ 1,490
	L 2	1,475 ÷ 1,490
	L 3	3,475 ÷ 3,490
	⌀ LANCIA >	–

Copyright by Fiat Auto

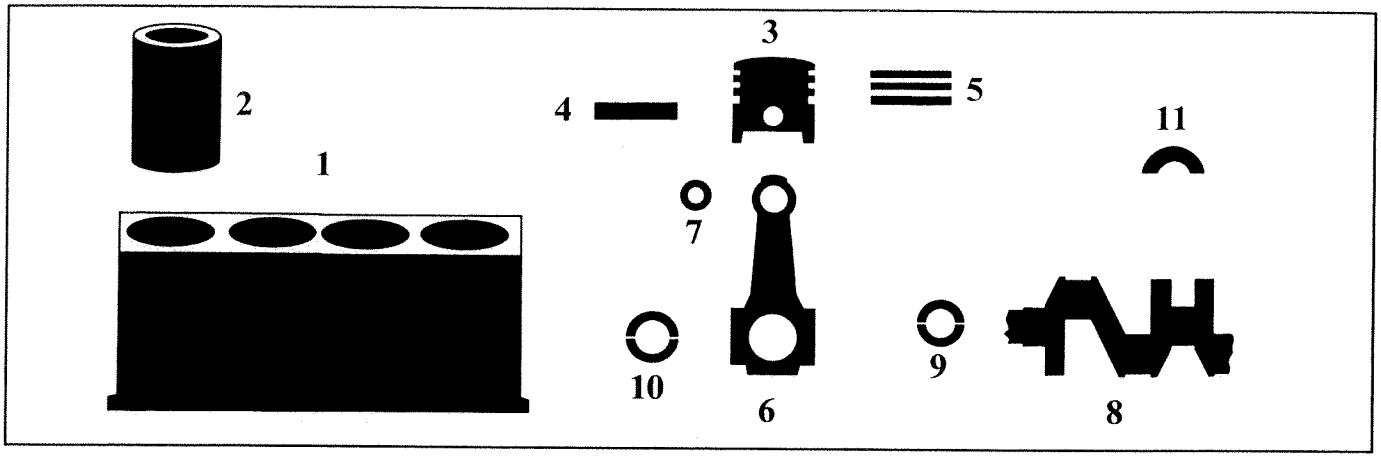

DESCRIPTION		Values in mm
5-2 Opening at end of piston rings in cylinder bore	1	0,40 ÷ 0,65
	2	0,40 ÷ 0,65
	3	0,30 ÷ 0,60
5-3 Piston rings Piston ring grooves	1	0,035 ÷ 0,067
	2	0,035 ÷ 0,070
	3	0,025 ÷ 0,060
6 Small end bush or pin housing	$\varnothing_1$	25,120 ÷ 25,145
6 Big end bearing housing	$\varnothing_2$	55,511 ÷ 55,524
7 Small end bush	$\varnothing_1$	25,197 ÷ 25,222
7 Small end bush	$\varnothing_2$	22,005 ÷ 22,015
4-7 Gudgeon pin Small end bush	Black	0,008 ÷ 0,021
	White	0,005 ÷ 0,018
7-6 Small end bush Bush housing		0,052 ÷ 0,102

DESCRIPTION		Values in mm
8 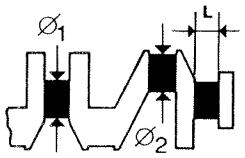 Main journals $\varnothing_1$	A red	59,973 ÷ 59,979
	B blue	59,967 ÷ 59,973
	C green	59,961 ÷ 59,967
Crank pins $\varnothing_2$	red	51,990 ÷ 52,000
	blue	51,980 ÷ 51,990
L		31,300 ÷ 31,335
9 Crankshaft bearings 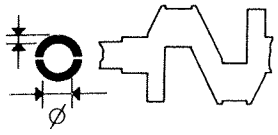 L	A red	1,833 ÷ 1,839
	B blue	1,839 ÷ 1,845
	C green	1,845 ÷ 1,851
⌀ LANCIA <		–
9-8 Crankshaft bearings – Main journals 		0,000 ÷ 0,024
10 Big end bearings 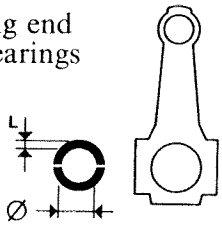 L	red	1,737 ÷ 1,745
	blue	1,741 ÷ 1,749
⌀ LANCIA <		–
10-8  Big end bearings - Main journals	red	0,021 ÷ 0,060
	blue	0,023 ÷ 0,062
11 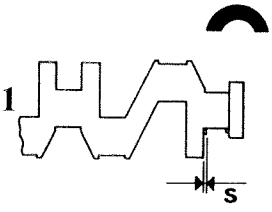 Thrust washers	S	2,310 ÷ 2,360
S LANCIA >		–
11-8  Crankshaft end float		0,080 ÷ 0,265

Copyright by Fiat Auto

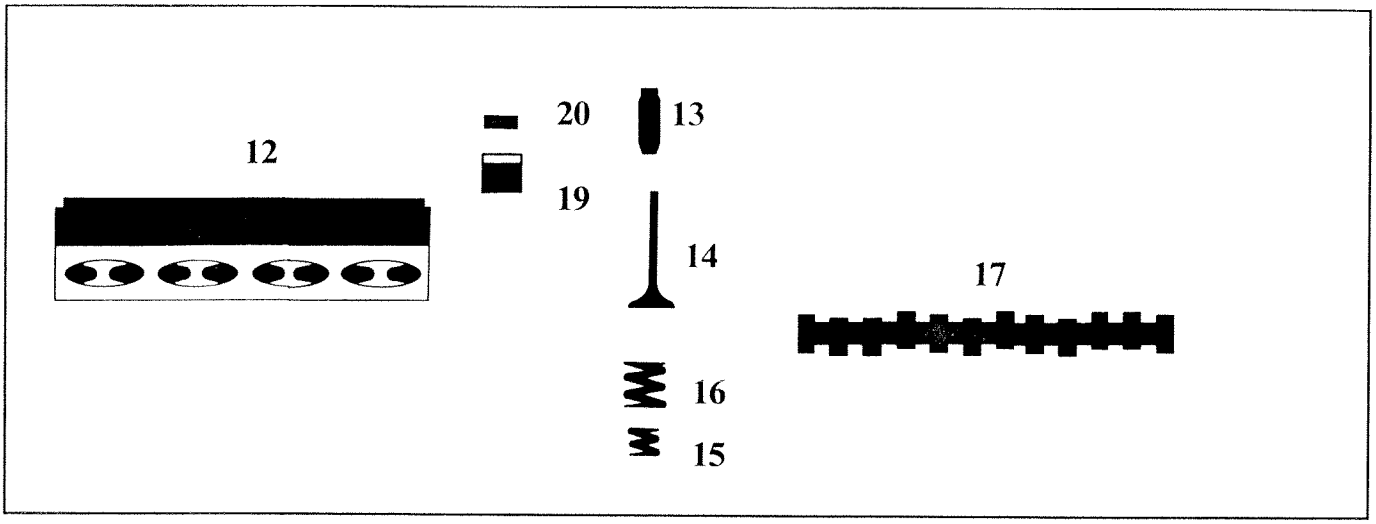

DESCRIPTION		Values in mm
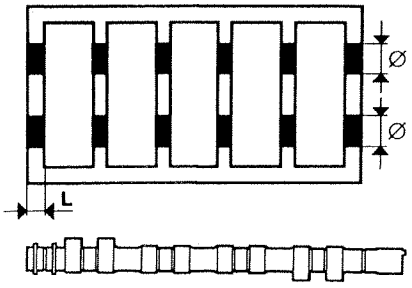 Camshaft supports 12	∅	27,010 ÷ 27,036
	L	19,902 ÷ 19,935
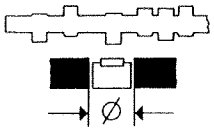 Tappet housing in cylinder head	∅	33,000 ÷ 33,025
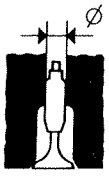 Valve guide bore in cylinder head	∅	12,000 ÷ 12,018
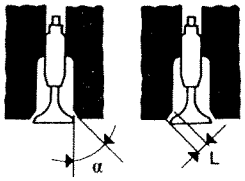 Valve seats 12	α	45° ± 10'
	α	45° ± 10'
	L	about 2
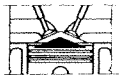 Volume of combustion chamber in cylinder head	cc	45,5

DESCRIPTION		Values in mm
13 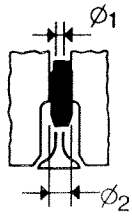 Valve guide	Ø1	7,000 ÷ 7,015
	Ø2	12,053 ÷ 12,064
	Ø2 LANCIA	0,2
13-12 Valve guide / Bore in cylinder head		0,035 ÷ 0,064
		0,046 ÷ 0,082
14 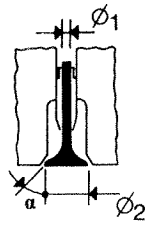 Valves	Ø1	6,965 ÷ 6,980
	Ø2	35,500 ÷ 35,700
	α	45°30' ± 5'
	Ø1	6,965 ÷ 6,980
	Ø2	31,000 ÷ 31,200
	α	45°30' ± 5'
14-13 Valve / Valve guide		0,020 ÷ 0,050
15 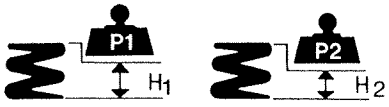 Internal valve spring	P1	12,36 ÷ 13,14 daN
	H1	30,5
	P2	24,02 ÷ 25,09 daN
	H2	21
16 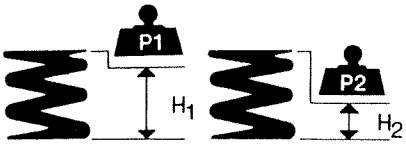 External valve spring	P1	21,91 ÷ 23,09 daN
	H1	32,5
	P2	43,07 ÷ 45,03 daN
	H2	23,5
17 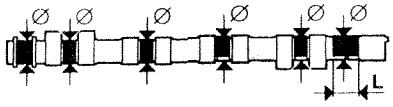 Camshaft bearings	Ø	26,949 ÷ 26,980
	L	20,000 ÷ 20,033
17 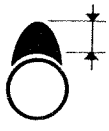 Cam lift		9,3
		9,3

Copyright by Fiat Auto

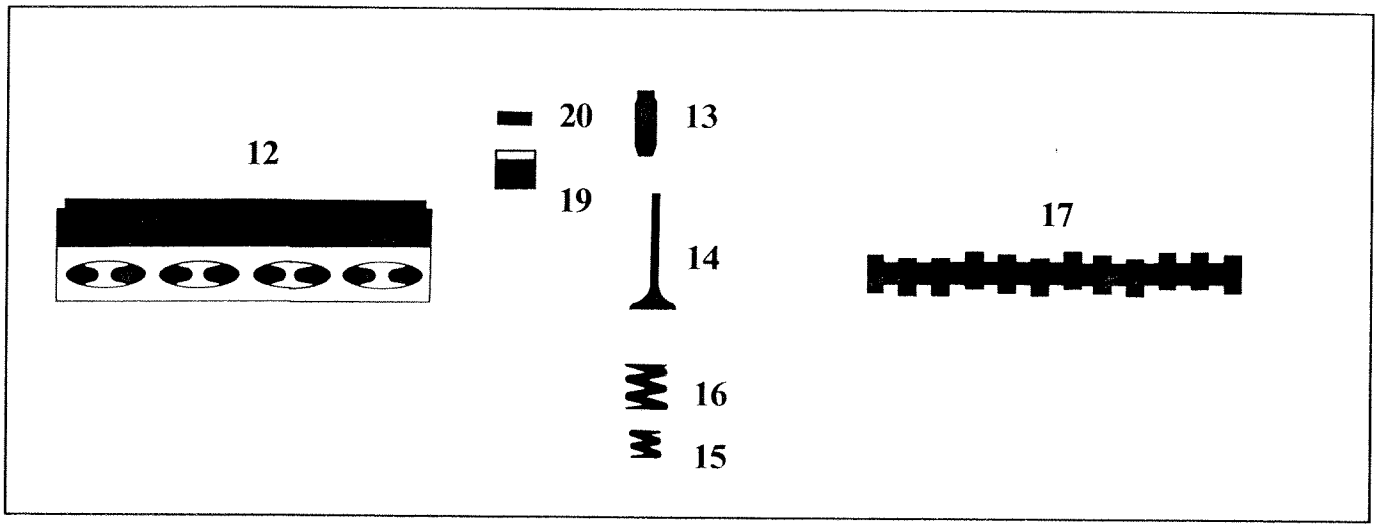

DESCRIPTION		Values in mm
17 - 12 Camshaft bearings - Seat	radial	0,030 ÷ 0,077
	axial	0,065 ÷ 0,131
19 Tappet	Ø	32,959 ÷ 32,975
19 - 12 Tappet - Housing in cylinder head		0,025 ÷ 0,066
17-20 clearance for timing check		0,25
		0,25
operational clearance		Hydraulic tappets

TIMING DIAGRAMS

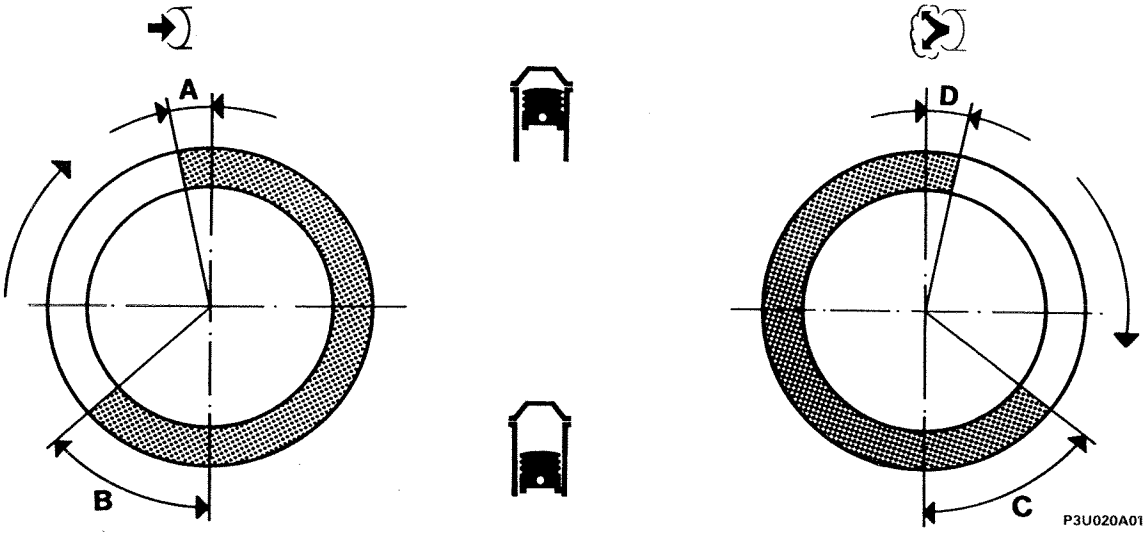

TIMING ANGLES

A	Inlet	opens BTDC	5°
B		closes ABDC	43°
C	Exhaust	opens BBDC	46°
D		closes ATDC	10°

LUBRICATION		Values in mm
Engine lubrication system		forced circulation via lobe gear pump with cartridge oil filter series
Oil pump		lobe gears
Pump operated		–
Oil pressure relief valve		incorporated in oil pump
Full flow filter		cartridge
Insufficient oil pressure sender unit		electrical
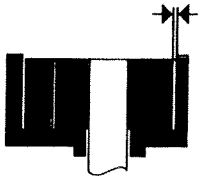 between the edge of the gear and the pump casing		0,170 ÷ 0,275
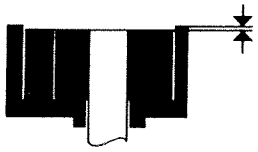 between the upper side of the gear and the cover		0,025 ÷ 0,075
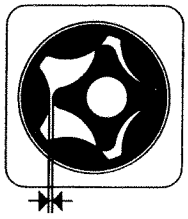 between the drive gear and the driven gear		0,040 ÷ 0,290
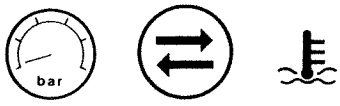	idling	> 0,8 bar
Operating pressure at a temperature of 100°C	at 4000 rpm	> 4,5 bar
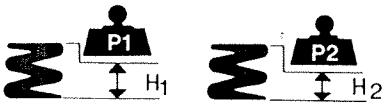 Oil pressure relief valve spring	P_1	20,13 ÷ 21,13
	H_1	28
	P_2	13,81 ÷ 14,81
	H_2	36

LUBRICATION		Values in mm
Engine lubrication system		forced circulation via geared pump with cartridge oil filter in series
Oil pump		gears
Pump operated		–
Oil pressure relief valve		incorporated in oil pump
Full flow filter		cartridge
Insufficient oil pressure sender unit		electrical
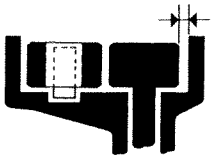 between the edge of the gears and the pump cover		0,025 ÷ 0,075
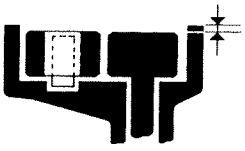 between the upper side of the gears and the pump cover		0,013 ÷ 0,062
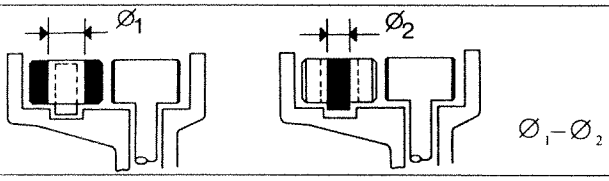		0,031 ÷ 0,053
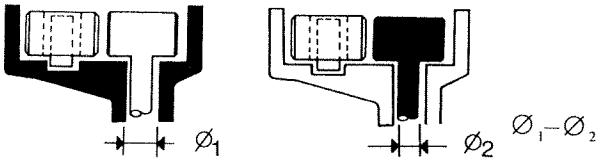		0,027 ÷ 0,034
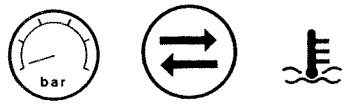	idle speed	> 0,8 bar
Operating pressure at a temperature of 100°C	at 4000 rpm	> 4,5 bar
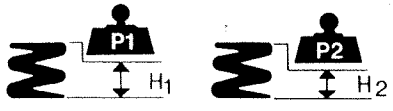	P1	15,86 ÷ 16,86
	H1	33,35
	P2	13,816 ÷ 14,816
Oil pressure relief valve spring	H2	36

COOLING SYSTEM

Cooling circuit			coolant circulation via centrifugal pump, radiator and two speed electrical fan operated by thermostatic switch electric fan operated by thermostatic switch	
Water pump operation			through belt	
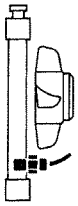 Thermostatic switch to engage fan		1st stage	86° ÷ 90°C	
		2nd stage	90° ÷ 94°C	
		1st stage	81° ÷ 85°C	
		2nd stage	85° ÷ 89°C	
Engine coolant thermostat		opening	85° ÷ 89°C	
		max opening	95°C	97 ÷ 101 °C (▲)
		valve travel	⩾ 7,5 mm	
Fitting clearance between impeller vanes and pump casing 			0,5 ÷ 0,8 mm	0,5 ÷ 1,1 mm (▲)
Pressure for checking rad. water tightness			0,98 bar	
Pressure for checking calibration of spring loading on expansion tank cap			0,98 bar	

(▲) 96 range versions

FUEL SYSTEM

Type	Bosch Motronic M 3.7 integrated electronic injection/ignition
Pump	electrical
Capacity	⩾ 120 l/h
Fuel pressure regulator setting	3 bar

Checking idle concentration of pollutant emissions

	CO (%)	HC (p.p.m.)	CO_2 (%)
Upstream of the catalytic converter	0,4 ÷ 1	⩽600	⩾ 12
Downstream of the catalytic converter	⩽0,35	⩽90	⩾ 13

Copyright by Fiat Auto

BOSCH MOTRONIC M3.7 INTEGRATED INJECTION/IGNITION SYSTEM COMPONENTS	2959 V6 24v	2959 V6 24v (▲)
Injection/ignition system electronic control unit	B.261.207.798	0.261.203.482
Butterfly casing (Dell'Orto)	RB	
Fuel pressure regulator	0.280.160.235	0.280.160.758
Injector	0.280.150.701	
Idle adjustment actuator	0.280.140.505	
Electric fuel pump	0.580.453.980	
Air flow meter	0.280.217.514	
Fuel filter	A.450.044.239	0.450.905.231
Butterfly valve position sensor (potentiometer)	0.280.122.001	
Coolant temperature sensor	0.280.130.026	
Electric fuel pump relay feed	0.332.014.140	
Injection/ignition system control unit relay feed	0.332.014.140	
Air temperature sender unit	0.280.130.073	
Lambda sensor	B.258.742.081	0.258.003.390
TDC and rpm sensor	0.261.210.113	0.261.210.104
Impulse damper	0.280.161.217	–
Fuel vapour solenoid valve	0.280.142.300	
Injection timing sensor	B.232.090.211	0.232.103.009
Detonation sensor	0.261.231.007	0.261.231.095 0.261.231.007
EGR valve (Pierburg)	7.22083.01	
Pressure modulating valve for EGR (Pierburg)	7.21483.00	

(▲) 96 range versions

CROSS SECTION OF ENGINE 2387 TD

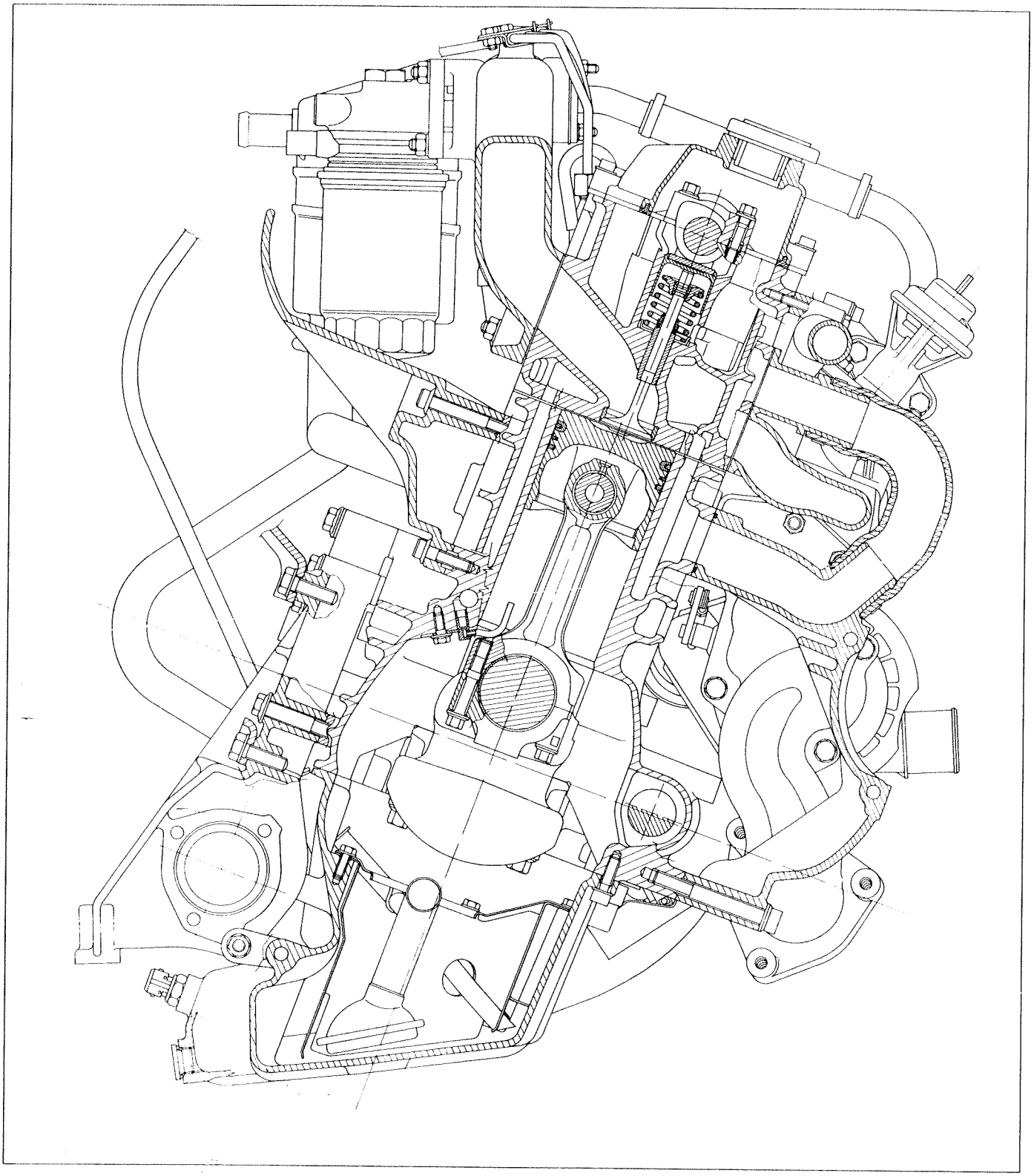

P3U041A02

Copyright by Fiat Auto

CHARACTERISTICS

			2387 TD
	Cycle		Diesel 4 stroke
	Timing		single overhead camshaft
	Engine balancing		through 1 counter-balance shaft
	Type of fuel system		Indirect mechanical injection
	Number of cylinders		5 in line
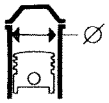	Cylinder liner (bore)	mm	82
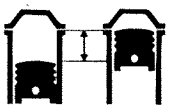	Stroke	mm	90,4
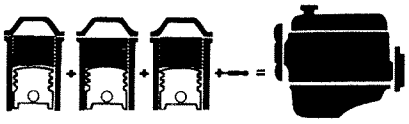	Capacity	cc	2387
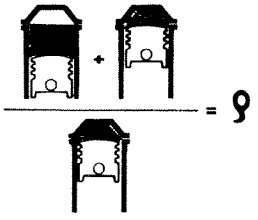	Compression ratio		21 ± 0,5 / 20,7 ± 0,5 (▲)
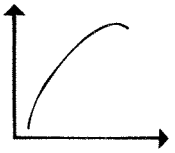 Max power 		kW (CEE) (CV) (CEE)	91 (124)
		rpm	4250 / 4000 (▲)
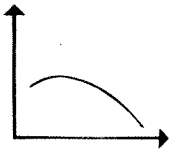 Max torque		daNm (CEE) (kgm) (CEE)	24,6 (25,2) / 26,5 (27) (▲)
		rpm	2000

(▲) 96 range versions

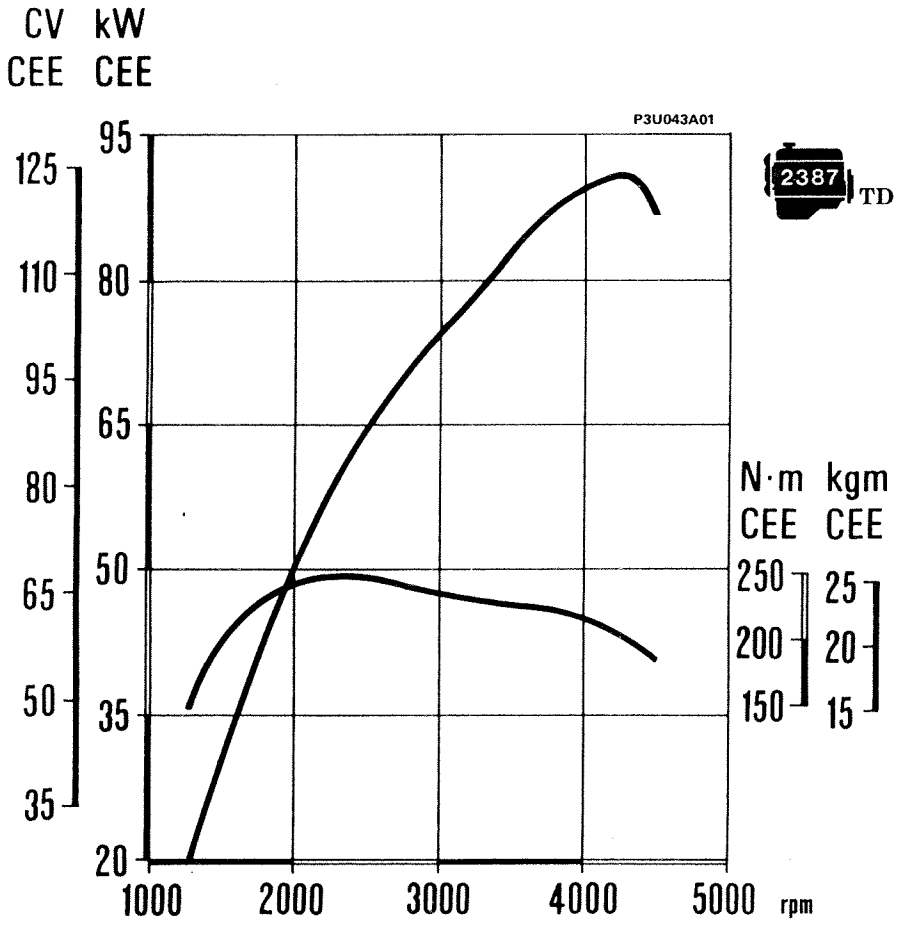

Typical engine curves

The power curve illustrated can be obtained with the engine overhauled and run in (50 hours of operation), without a fan, with a silencer and air filter fitted, at sea level.

Copyright by Fiat Auto

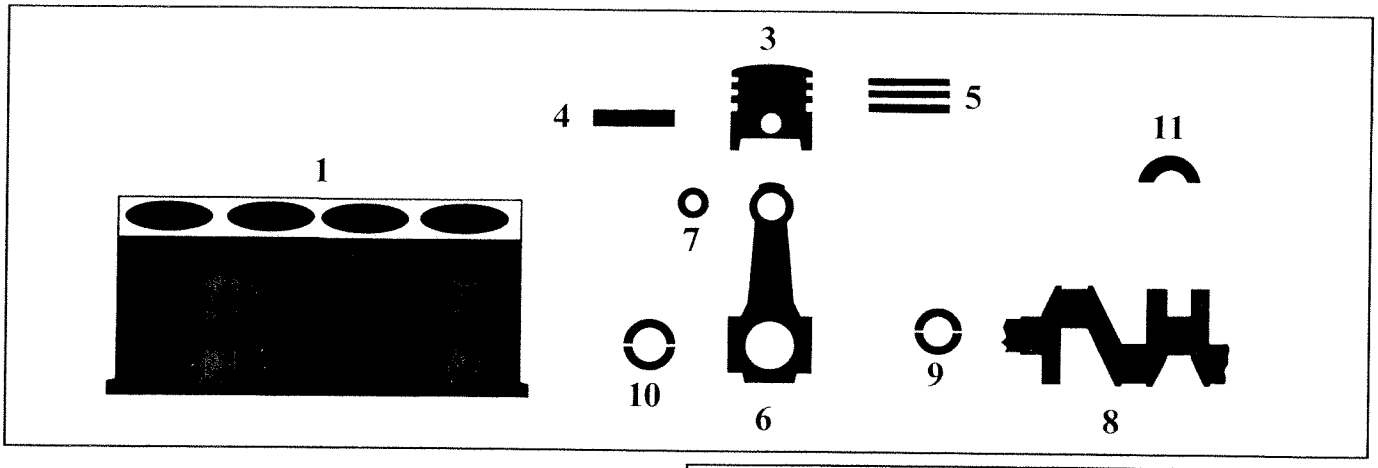

DESCRIPTION			2387 TD
			Values in mm
1 Main bearing supports	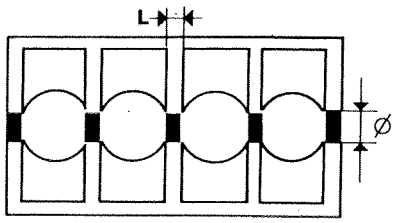	L	21,720 ÷ 21,800
		Ø	63,705 ÷ 63,718
Cylinder bore	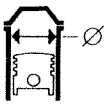	A	82,000 ÷ 82,010
		B	82,010 ÷ 82,020
		C	82,020 ÷ 82,030
3 Piston		X	10
		A	81,930 ÷ 81,940
		B	81,940 ÷ 81,950
		C	81,950 ÷ 81,960
		Ø LANCIA >	0,4
3-1	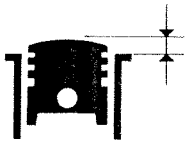	Piston projection	0,637 ÷ 1,162
3		Diff. in weight between pistons	± 5 g
3-1		Piston Cylinder bore	0,060 ÷ 0,080

DESCRIPTION		Values in mm
		2387 TD
3 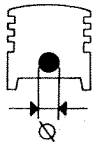 Gudeon pin housing	∅	25,991 ÷ 25,996
3  Piston ring grooves 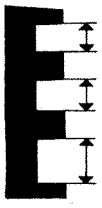	1	2,675 ÷ 2,705 (*)
	2	2,010 ÷ 2,030
	3	3,020 ÷ 3,040
4 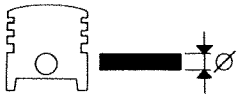 Gudgeon pin	∅	25,982 ÷ 25,988
	∅ LANCIA >	0,2
4-3  Gudgeon pin - Housing		0,003 ÷ 0,014
5 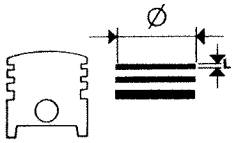 Piston rings 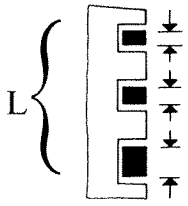	1	2,575 ÷ 2,595 (**)
	2	1,970 ÷ 1,990
	3	2,975 ÷ 2,990
	∅ LANCIA >	0,4
5-3  Piston rings Piston ring grooves 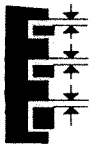	1	0,080 ÷ 0,130 (**)
	2	0,020 ÷ 0,060
	3	0,030 ÷ 0,065
5-1  Opening at end of piston rings in cylinder bore 	1	0,200 ÷ 0,400
	2	0,250 ÷ 0,500
	3	0,250 ÷ 0,500

(*) Measured on the 79 mm diameter

(**) Measured 1.5 mm from the outside edge

Copyright by Fiat Auto

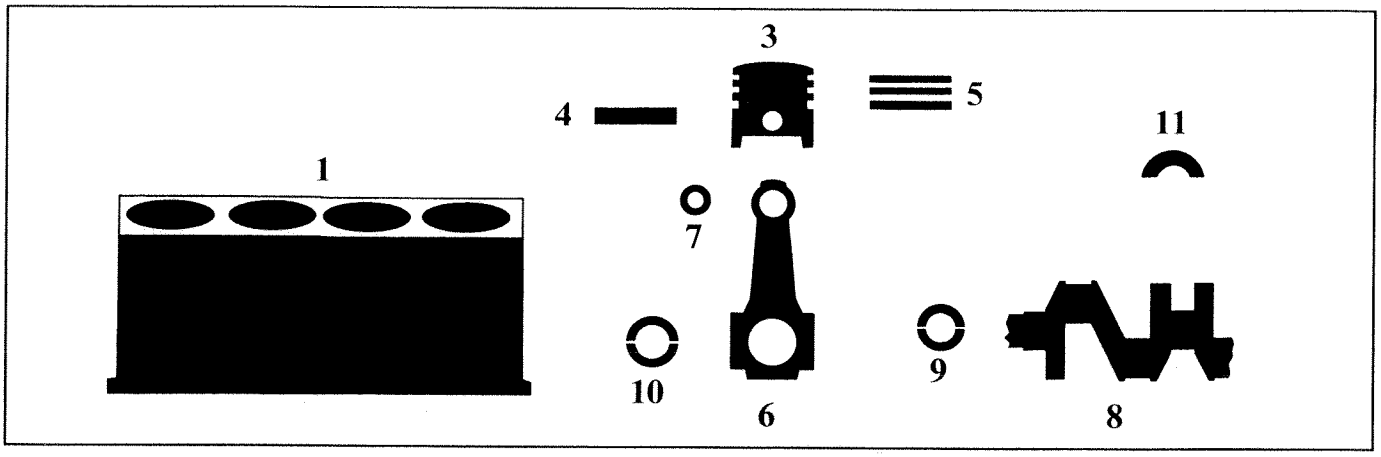

2387 TD

DESCRIPTION			Values in mm
6	Small end bush or pin housing	$\varnothing_1$	28,939 ÷ 28,972
	Big end bearing housing	$\varnothing_2$	53,897 ÷ 53,909
6	Difference in weight between con rods		± 2,5 g
7	Small end bush	$\varnothing_1$	29,018 ÷ 29,038
		$\varnothing_2$	26,006 ÷ 26,012
4-7	Gudgeon pin Small end bush		0,018 ÷ 0,030
7-6	Small end bush Bush housing		0,046 ÷ 0,099
8	Main journals	$\varnothing_1$ A	59,994 ÷ 60,000
		$\varnothing_1$ B	59,988 ÷ 59,994
		$\varnothing_1$ C	59,982 ÷ 59,988
	Crank pins	$\varnothing_2$ A	50,799 ÷ 50,805
		$\varnothing_2$ B	50,793 ÷ 50,799
		$\varnothing_2$ C	50,787 ÷ 50,793
		L	26,575 ÷ 26,625

DESCRIPTION		2387 TD
		Values in mm
9 Crankshaft bearings	L A	1,836 ÷ 1,840
	L B	1,839 ÷ 1,843
	L C	1,842 ÷ 1,846
	⌀ LANCIA <	0,254 - 0,508
9–8 Crankshaft bearings - Main journals		0,025 ÷ 0,052
10 Big end bearings	L A	1,527 ÷ 1,531
	L B	1,530 ÷ 1,534
	L C	1,533 - 1,537
	⌀ LANCIA <	0,254 - 0,508
10–8 Big end bearings - Main journals		0,030 ÷ 0,056
11 Thrust washers	S	2,342 ÷ 2,358
	S LANCIA >	0,127
11–8 Crankshaft end float		0,059 ÷ 0,221

Copyright by Fiat Auto

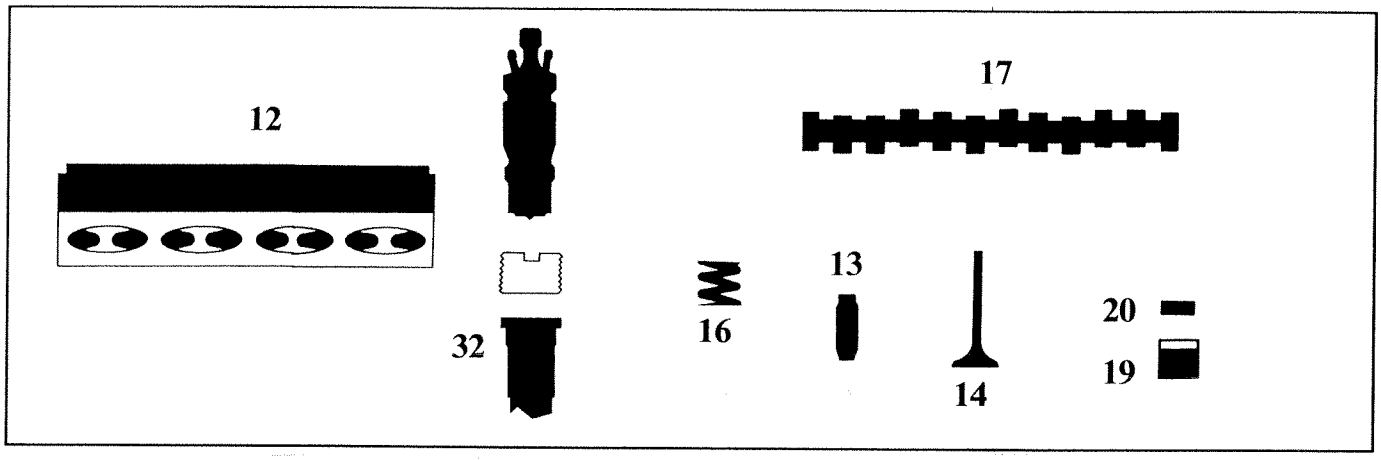

2387 TD

DESCRIPTION		Values in mm
Valve guide bore in cylinder head	Ø	13,950 ÷ 13,977
Valve seats	α (intake)	45° ± 5'
	α (exhaust)	45° ± 5'
	L	about 2.7
Camshaft supports 12	Ø	26,045 ÷ 19,070
(*)	(*)	19,100 ÷ 19,150
Tappet housing	Ø	37,000 ÷ 37,025
13 Valve guide	$Ø_1$	8,022 ÷ 8,040
	$Ø_2$	14,010 ÷ 14,030
	$Ø_2$ LANCIA	0,05 - 0,10 - 0,25

(*) Front cap measurement

DESCRIPTION			2387 TD
			Values in mm
13-12	Valve guide Bore in cylinder head		0,033 ÷ 0,080
14 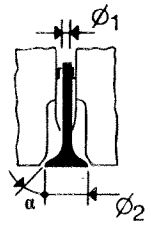	Valve	∅1	7,974 ÷ 7,992
		∅2	37,40 ÷ 37,70
		α	45°30' ± 5'
		∅1	7,974 ÷ 7,992
		∅2	30,90 ÷ 31,20
		α	45°30' ± 5'
14-13	Valve - Valve guide		0,030 ÷ 0,066
16 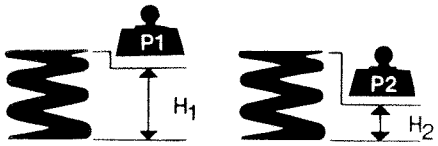	Valve spring	P1	36,7 ÷ 39,6 daN
		H1	36
		P2	56 ÷ 61 daN
		H2	26,5
17 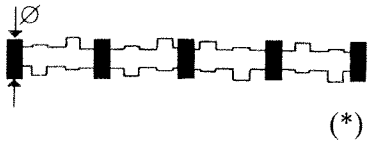	Camshaft bearings	∅	26,000 ÷ 26,015
		(*)	19,250 ÷ 19,330
17-12		radial	0,030 ÷ 0,070
		axial	0,100 ÷ 0,230
17 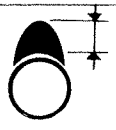	Cam lift		8,5
			8,5
19 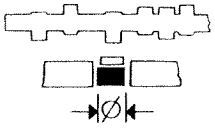	Tappet	∅	36,975 ÷ 36,995
19-12	Tappet - Cylinder head		0,005 ÷ 0,050

Copyright by Fiat Auto

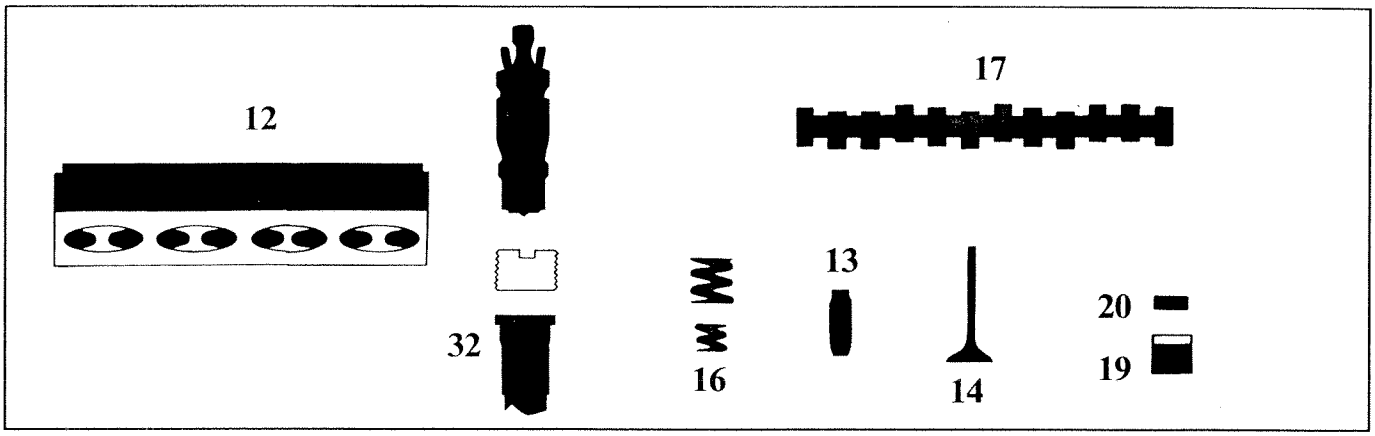

DESCRIPTION			Values in mm	
			2387 TD	
20	Shim S	S (0,05)	3,25 ÷ 4,70	
17-20	clearance for timing check		0,50	
			0,50	
	operational clearance		0,30 ± 0,05	
			0,35 ± 0,05	
32-12	Variation between ante-chamber plane and cylinder head plane		- 0,150 ÷ -0,300	
Timing angles	Inlet	opens before TDC	6° (●)	0° (▲)
		closes after BDC	26° (●)	32° (▲)
	Exhaust	opens before BDC	26° (●)	32° (▲)
		closes after TDC	6° (●)	0° (▲)

(●) Versions up until the 96 range and 96 range versions until engine n°

(▲) 96 range versions

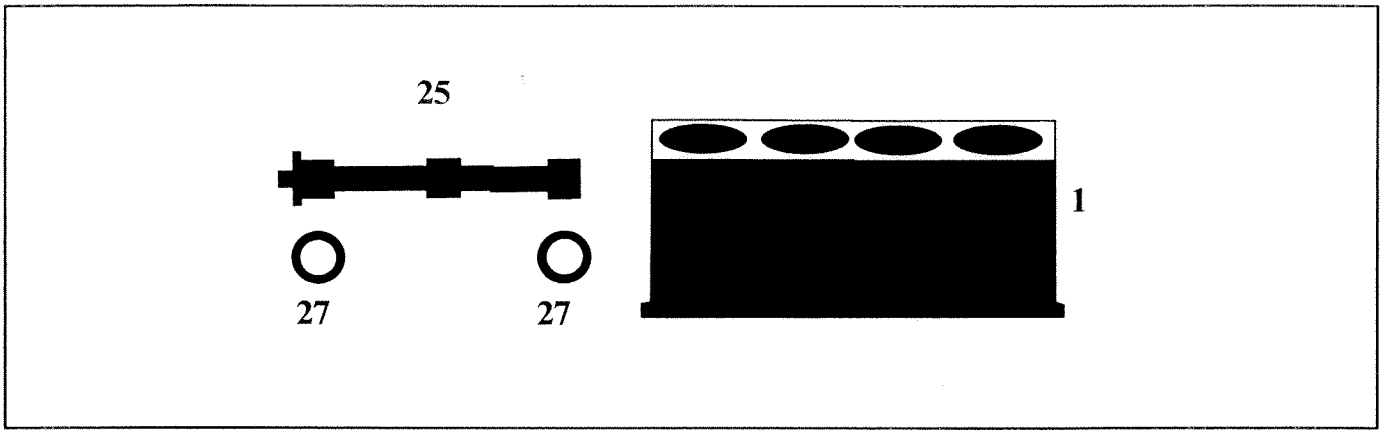

2387 TD

DESCRIPTION			Values in mm
25	Counter balance shafts		n° 1
	Shaft operation		through oil pump driven gear
27 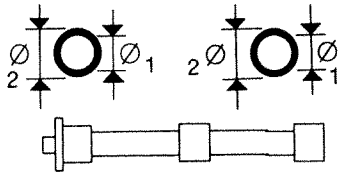 Ball bearings for counter balance shafts		$\varnothing_1$	19,900 ÷ 20,000
		$\varnothing_2$	46,989 ÷ 47,000
25 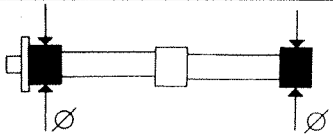 Counter balance shaft bearings		$\varnothing$	19,980 ÷ 19,993
1	Bearing seats in crankcase	$\varnothing$	46,975 ÷ 47,000
27-1 	Ball bearings Cylinder block seats		+0,011 ÷ −0,025
25-27 	Shaft bearings Ball bearings		+0,020 ÷ −0,003

Copyright by Fiat Auto

LUBRICATION	2387 TD
	Values in mm
Engine lubrication system	forced feed via geared pump with cartridge oil filter in series
Oil pump	gears, located in the crankshaft front cover
Pump operated	through chain driven by crankshaft
Oil pressure relief valve	incorporated in the crankshaft front cover
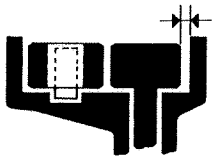 between the edge of the gears and the pump casing	0,110 ÷ 0,180
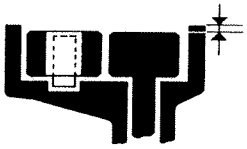 between the upper side of the gears and the pump cover	0,016 ÷ 0,086
Full flow filter	cartridge
Insufficient oil pressure sender unit	electrical
 between drive gear and the driven gear	0,30
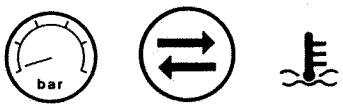 at 4000 rpm Operating pressure at a temperature of 100°C	5 ÷ 5,5 bar
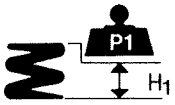 Oil pressure relief valve spring — P_1	11,73 ÷ 12,51 daN
H_1	35

COOLING SYSTEM

	2387 TD
Cooling circuit	coolant circulation via centrifugal pump, radiator, expansion tank and two speed electric fan operated by thermostatic switch
Water pump operation	through belt
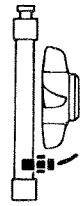 Thermal switch to engage fan ⇄	1st speed: 86° ÷ 90°C; 2nd speed: 90° ÷ 94°C
Thermal switch to engage fan stop	1st speed: 81° ÷ 85°C; 2nd speed: 85° ÷ 89°C
Engine coolant thermostat — opening	78° ÷ 82°C
Engine coolant thermostat — max opening	86° ÷ 90°C
Engine coolant thermostat — valve travel	7,5 mm
Pressure for checking system water tightness	0,98 bar
Pressure for checking exhaust valve on expansion tank cap	0,98 bar

FUEL SYSTEM

Firing order	1 - 2 - 4 - 5 - 3
Rotary type injection pump	VE R 560
Nozzle holder type	BOSCH KCA SV 0.216.138
Nozzle type	BOSCH DN 12 SD 290
Injector setting pressure	150 ÷ 158 bar
Injection pump timing: with piston for cylinder n°1 at TDC (compression stroke)	piston stroke = 0,7 mm
Engine idle speed	830 ÷ 870 rpm
Maximum free running engine speed	5050 ÷ 5150 rpm

Copyright by Fiat Auto

DATA FOR CHECKING BOSCH INJECTION PUMP TYPE VE R 560

GENERAL TEST CONDITIONS
- Test oil: ISO 4113
- Temperature of test oil: 45° ± 1°C (reflux outlet ●)
- Pump entry pressure: 0,35 bar
- Rotation clockwise

SPECIFIC TEST CONDITIONS
- Bosch injectors 1.688.901.022
- Injectors: Bosch 1.688.901.922 (DNO SD 1510) set at 130 ÷ 133 bar
- Piping: 2 × 6 × 450 mm
- Control panel type HM5-1-1

Type of check	Rotation speed rpm	Advance check mm	Uist voltage mV	Capacity per element mm^3/cycle	Max. discr. btwn ind. flow rates mm^3/cycle	Duty cyle TV%
Advance	500	4,8 ÷ 6,8	3000	–	–	0
	1250	6,6 ÷ 8,2	3000	–	–	0
	2250	⩽ 3,0	1850	–	–	100
	2250	9,4 ÷ 10,2	3000	–	–	0
Capacity	100	–	3290	48 ÷ 64	–	100
	400	–	1850	3,7 ÷ 8,3	⩽ 3	100
	500	–	3000	50,7 ÷ 55,3	–	0
	1250	–	2310	33 ÷ 36	⩽ 3	0
	2250	–	3000	61,4 ÷ 65,4	–	0
Reflux capacity (●)	2250	–	3000	20 ÷ 50 l/h	–	0
Stop (●●)	1000	–	3000	⩽ 3	–	0

Fixed advance = 0.75 ± 0,05 mm before T.D.C.
Electrical stop control: minimum operating voltage 8V. Rated voltage 11 ÷ 13V
(●) Fuel return from the pump to the tank.
(●●) To be carried out with the electrical stop control switched off.

SUPERCHARGING (with turbocharger operated by exhaust gases with waste-gate valve)

Turbocharger: type IHI	VL6
	RH85 (▲)
Maximum supercharging pressure	1,050 bar

(▲) 96 range versions

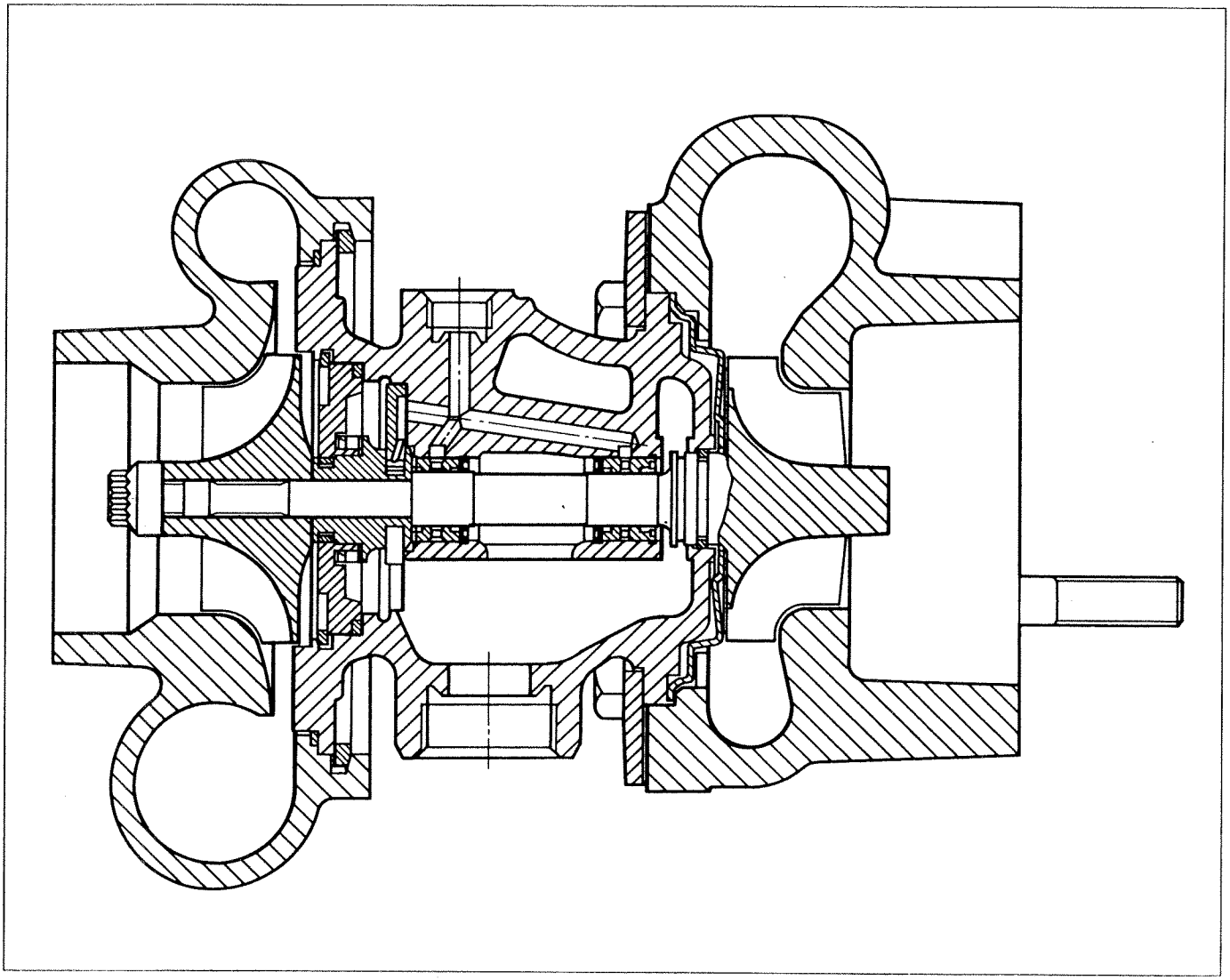

P3U055A01

CROSS SECTION OF TURBOCHARGER

	1998 20v	2446 20v	1995 16v turbo / 2959 V6 24v	2387 TD
	Values in mm			
Type	dry, single plate			
Operating mechanism	diaphragm spring			
Spring loading daN	525: 485 (▲) / 525 (▲)		650	650: 620 (▲)
Lining ∅1	228,6		235	
Lining ∅2	155		155	
Distance between pedal in end of travel position and rest position	132,7 ÷ 138,7			
Clutch release	hydraulic			
Clutch pump ∅	18,75 (3/4")			
Operating cylinder ∅	25,4 (1")			

(▲) 96 range versions

		1998 20v	2446 20v	1995 16v turbo	2959 V6 24v	2387 TD
		1 3 5 / 2 4 R				
GEARBOX	Type	C.503.5.23	C.503.5.23	C.503.5.29	C.503.5.29	C.503.5.29
Synchronizers	spring ring (Porsche type)	–				
	baulk ring type	1 3 5 / 2 4 R				
Gears	helical toothed	1 3 5 R				
	straight toothed	1 3 5 / 2 4				
Gear ratio	1st	3,800	3,800	3,800	3,500	3,800
	2nd	2,235	2,235	2,235	2,235	2,235
	3rd	1,360 (1,520)●	1,520	1,360	1,520	1,360
	4th	0,971 (1,156)●	1,156	0,971	1,156	0,971
	5th	0,811 (0,914)●	0,914	0,811	0,914	0,707 (0,763)■
	R	3,545	3,545	3,545	3,545	3,545

DIFFERENTIAL						
Ratio	crown wheel and pinion reduction	16/57 (3,562) (16/63)● (3,937)●	16/57 (3,562)	16/57 (3,562)	17/57 (3,353)	16/63 (3,937) (16/57)■ (3,562)■

● For Power Drive Version
■ Version for specific markets (France)

Copyright by Fiat Auto

GEARBOX DIFFERENTIAL		1998 20v	2446 20v	1995 16v turbo	2959 V6 24v	2387 TD
Ratio at the wheels	1	13,535 (14,960)●	13,535	13,535	11,735	14,960 (13,535)■
	2	7,961 (8,799)●	7,961	7,961	7,494	8,799 (7,961)■
	3	4,844 (5,984)●	5,414	4,844	5,096	5,354 (4,844)■
	4	3,458 (4,551)●	4,117	3,458	3,876	3,823 (3,458)■
	5	2,889 (3,598)●	3,255	2,889	3,065	2,783 (2,718)■
	R	12,627 (13,957)●	12,627	12,627	11,886	13,957 (12,627)■
Differential internal casing bearing		conical roller bearings				
Adjustment of bearing pre-loading		by shims				
Thickness of shims	mm	1,25 ÷ 1,60				
Bearing rolling torque	daNm	0,10 ÷ 0,14				
Clearance between planet/satellite gears	mm	0,10 ÷ 0,20				
Adjust. of clearance btwn planet/sat. gears		by shims				
Thickness of shims	mm	1,8 ÷ 2,2				

(●) For Power Drive Version
(■) Version for specific markets (France)

Z.F. AUTOMATIC GEARBOX

ENGINE	2959 V6 24v
Gears	❶ ❷ ❸ ❹ Ⓡ
Gear ratios ❶	2,579:1
Gear ratios ❷	1,407:1
Gear ratios ❸	1:1
Gear ratios ❹	0,742:1
Gear ratios Ⓡ	2,882:1
Idler ratio	55/56 (0,982)
Torque converter ∅ mm	260
Ratio (multiplication) of engine torque	2,296
Quantity of oil — total, with gearbox converter, radiator and pipes empty	8,2 kg
Quantity of oil — replacement only	4,5 Kg

GI/A

DIFFERENTIAL

Crown wheel and pinion reduction	75/22 (3,409)
Final drive ratio	55/56 × 75/22 (3,348)
Ratio at the wheels ❶	8,634
Ratio at the wheels ❷	4,710
Ratio at the wheels ❸	3,348
Ratio at the wheels ❹	2,484
Ratio at the wheels Ⓡ	7,640

Copyright by Fiat Auto

FRONT BRAKES

			1998 20v	1995 16v turbo · 2446 20v · 2959 VG 24v · 2387 TD
			Values in mm	
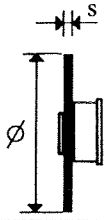	Disc	Ø	280,800 ÷ 281,200	280,800 ÷ 281,200
		s	21,900 ÷ 22,100	25,900 ÷ 26,100
		s (new)	20,55	24,55
		s allowed	20,2	24,2
	Brake pads	s allowed	1,5	
	Caliper	Ø	54	57
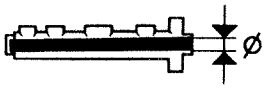	Master cylinder (pump)	Ø	–	–
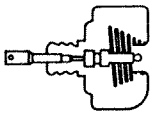	Servo brake		LUCAS 10" hydro-pneumatic vacuum servo acting on all four wheels	LUCAS 9"+8" (10" ●) hydro-pneumatic vacuum servo acting on all four wheels

● For 2446 20v and 2387 TD versions

REAR BRAKES

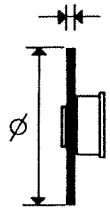	Disc	Ø	275,800 ÷ 276,200
		s	9,80 ÷ 10,10
		s (new)	9,35
		s allowed	9
	Brake pads	s allowed	1,5
	Caliper	Ø	38
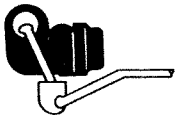	Load proportioning valve		acting on the rear wheels
	Ratio (reduction)		0,36

Type		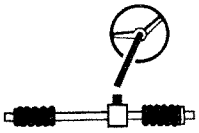 rack and pinion power assisted	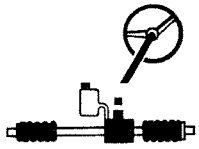 electronically controlled rack and pinion (servotronic)
 Ratio	 no. of turns lock to lock	2,83	3
	 rack travel	153 mm	
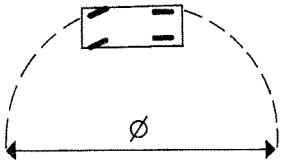	Turning circle	10,9 m	
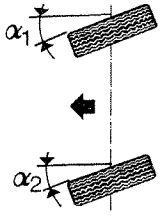 Steering angle	outer wheel α_1	32° 40'	
	inner wheel α_2	37° 30'	
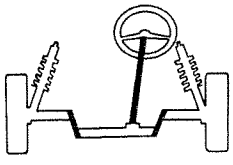	Steering column	 with 2 universal joints	

WHEEL GEOMETRY

		unladen car (*)
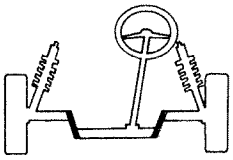 Front suspension	camber (**) 	-0°35' ÷ -1°15'
	caster (**) 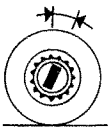	2°50' ÷ 3°30'
	toe in 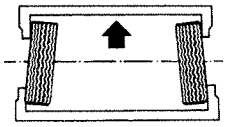	0 ÷ 2 mm
	front wheel offset ▲	0°
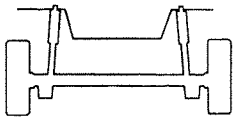 Rear suspension	camber (**) 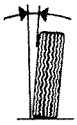	- 0°25' ÷ - 1°5'
	caster (**) 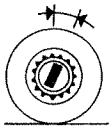	–
	toe in 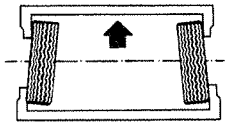	1,5 ÷ 3,5 mm
	rear wheel thrust angle ▲	0°

(*) With tyres inflated to the correct pressure and vehicle in running order
(**) Angles cannot be adjusted
(▲) Angular values which cannot be adjusted, used for the correct alignment of the vehicle

TYRES

ENGINE	Tubeless, radial type tyre		Tyre inflation pressure			
			Front		Rear	
	standard	available on request	average load	heavy load	average load	heavy load
1998 20v	195/65 R15 91V	205/60 R15 91V	2,2 bar	2,3 bar	2,2 bar	2,3 bar
2446 20v	205/60 R15 91W		2,2 bar	2,3 bar	2,2 bar	2,3 bar
1995 16v turbo	205/60 R15 91W		2,2 bar	2,3 bar	2,2 bar	2,3 bar
2959 V6 24v	205/60 R15 91W		2,2 bar	2,3 bar	2,2 bar	2,3 bar
2387 TD	195/65 R15 91V	205/60 R15 91V	2,2 bar	2,3 bar	2,2 bar	2,3 bar

WHEEL RIMS

ENGINE	Wheel rim	
	standard	available on request
1998 20v, 2446 20v, 1995 16v turbo, 2959 V6 24v, 2387 TD	steel 6½ J × 15 H2	alloy 6½ J × 15 H2

NOTE *All engine types have a spare wheel with a 4B × 15 H rim and a T 125/90 R15 96M tyre. Speed limit: 80 Km/h. Inflation pressure: 4,2 bar*

As an option it is possible to have a normal spare wheel on all versions except for those equipped with automatic transmission, 2387 TD and North-European versions.

Copyright by Fiat Auto

Front suspension independent. Lower track control arms; dampers incorporated with the double acting, hydraulic shock absorbers, coil springs and stabilizer bar.

Coil springs

ENGINE	1998 20v	2446 20v / 1998 20v (●)	1995 16v turbo / 2387 TD / 2446 20v (●)	2959
Diameter of wire mm	14,25 ÷ 14,35			
Number of turns	3,6			
Direction of coil	clockwise			
Height of spring released mm	374	385	395	406
Height of spring under a load of: 412 daN mm	185	-	-	-
Height of spring under a load of: 436 daN mm	-	185	-	-
Height of spring under a load of: 458 daN mm	-	-	185	-
Height of spring under a load of: 483 daN mm	-	-	-	185
The springs are subdivided into two categories, identifiable by a mark:				
yellow (1) for those under a load of: 412 daN height of mm	> 185	-	-	-
yellow (1) for those under a load of: 436 daN height of mm	-	> 185	-	-
yellow (1) for those under a load of: 458 daN height of mm	-	-	> 185	-
yellow (1) for those under a load of: 483 daN height of mm	-	-	-	> 185
green (1) for those under a load of: 412 daN height of mm	⩽ 185	-	-	-
green (1) for those under a load of: 436 daN height of mm	-	⩽ 185	-	-
green (1) for those under a load of: 458 daN height of mm	-	-	⩽ 185	-
green (1) for those under a load of: 483 daN height of mm	-	-	-	⩽ 185

(1) Springs of the same category must be fitted.

Shock absorbers

Type:	hydraulic telescopic, double acting
Open (start of damping action)	505 ÷ 511
Closed (metal against metal) mm	351 ÷ 357
Travel mm	154

(●) Vehicles with air conditioning

Rear suspension independent. Longitudinal and transverse rods, telescopic dampers incorporated with the double acting, hydraulic shock absorbers, coil springs and stabilizer bar.

Coil springs

	1998 20v	2446 20v	1995 16v turbo	2959 V6 24v	2387 TD
Diameter of wire mm	12,35 ÷ 12,45				
Number of turns	4,93				
Direction of coil	clockwise				
Height of spring released mm	336,19				
Height of spring under a load of: 279,5 daN mm	195				
The springs are subdivided into two categories, identifiable by a mark					
yellow (1) for those under a load of: 279,5 daN height of mm	> 195				
green (1) for those under a load of: 279,5 daN height of mm	⩽ 195				

(1) Springs of the same category must be fitted.

Shock absorbers

Type		hydraulic telescopic, double acting
Open (start of damping action)	mm	721 ÷ 727
Closed (metal against metal)	mm	529,2 ÷ 535,2
Travel	mm	191,8

Copyright by Fiat Auto

	 1998 20v	 2446 20v	 1995 16v turbo	 2959 V6 24v
STARTER MOTOR	M.Marelli E 70R-12V-1,4 kW (with reduction gear)	M.Marelli E 70R-12V-1,4 kW (with reduction gear)	M.Marelli E 70R-12V-1,4 kW (with reduction gear) Bosch ∅74,5-12V-1,4kW (with reduction gear)	Bosch ∅74,5-12V-1,4kW (with reduction gear)
ALTERNATOR	M.Marelli A 127I-14V-55/100A A 127IR-14V-55/100A (▲) Bosch NC-14V-60/120A (*)		Bosch N1-14V-40/115A	Bosch NC-14V-60/120A
VOLTAGE REGULATOR	BUILT IN ELECTRONIC			
BATTERY	12V - 60Ah - 320A			12V - 60Ah - 320A 12V - 60Ah - 380A (▲)
IGNITION SYSTEM	Bosch Motronic M2.10 integrated electronic injection/ignition	Bosch Motronic M2.10 integrated electronic injection/ignition	Bosch Motronic M2.7 integrated electronic injection/ignition	Bosch Motronic M3.7 integrated electronic injection/ignition
IGNITION COIL	0.221.152.067 0.221.504.006 (▲) (1 per spark plug)		Bosch 0.221.503.407	Bosch A.221.152.064-017 0.221.504.456 (▲) (1 per spark plug)
POWER MODULE	–	–	Bosch 0.221.100.201	–
SPARK PLUGS	Champion RC7BMC	Champion RC7BMC	Bosch WR6 DTC	NGK PFR6B

(*) For vehicles equipped with air conditioning
(▲) 96 range versions

	2387 TD
STARTER MOTOR	M.Marelli E 95R - 12V - 2,2kW (with reduction gear)
ALTERNATOR	M.Marelli A 127I - 14V - 55/100A M.Marelli A 127IR - 14V - 55/100A (▲) Bosch NC - 14V - 60/120A (*)
VOLTAGE REGULATOR	BUILT IN ELECTRONIC
BATTERY	12V - 70Ah - 450A
PRE-HEATING ELECTRONIC CONTROL UNIT	Bosch 0.281.003.010
HEATER PLUGS	BERU 9.800.207.354-A BERU 0.100.226.249 (▲)

(*) For vehicles equipped with air conditioning
(▲) 96 range versions

Copyright by Fiat Auto

STARTER MOTOR		1998 20v	2446 20v	1995 16v turbo	1995 16v turbo	2959 V6 24v	2387 TD
Type		M.MARELLI E70R - 12V - 1,4kW (with reduction gear)			BOSCH ∅74,5 - 12 V - 1,4 kW (with reduction gear)		M. Marelli E 95R - 12 V - 2,2 kW (with reduction gear)
Voltage	V	12					
Nominal power	kW	1,4					2,2
Rotation, pinion side		clockwise					
No. of poles		4			6		4
Windings		series			permanent magnets		series - parallel
Engagement		free wheel					
Operation		solenoid					
End float of armature shaft	mm	0,15 ÷ 0,45					
Data for bench test							
Operating test (*):							
current	A	360 ÷ 380			360		600
speed	rpm	1150			1800		1400
voltage	V	8,15			8,5		7,9
torque developed	daNm	1,30			0,98		1,6
Engagement test (*):							
current	A	680 ÷ 700			690 ÷ 730		1110 ÷ 1150
voltage	V	4,9			4,8 ÷ 5,2		4,4 ÷ 4,6
torque developed	daNm	3,11			2,15		⩾3,9
Free running test (*):							
current	A	60 ÷ 80			25 ÷ 40		120 ÷ 140
voltage	V	11,1			11,8 ÷ 12		11
speed	rpm	4040			3000 ÷ 4000		4500 ÷ 4750
Relay							
Winding resistance (*)	pull in Ω	0,33 ÷ 0,37			0,32 ÷ 0,36		0,23 ÷ 0,27
	hold in Ω	1,13 ÷ 1,27			1,65 ÷ 1,95		0,93 ÷ 1,07
Lubrication							
Internal splines and shaft bushes		VS⁺ SAE 10 W					
Engagement sleeve and intermediate disc		TUTELA MR3					

(*) Data obtained at an ambient temperature of 20°C.

NOTE *When overhauling it is not advisable to undercut the insulator between the commutator bars*

STARTER MOTOR - TYPICAL CURVES

M. Marelli E 70R - 12 V - 1,4 kW

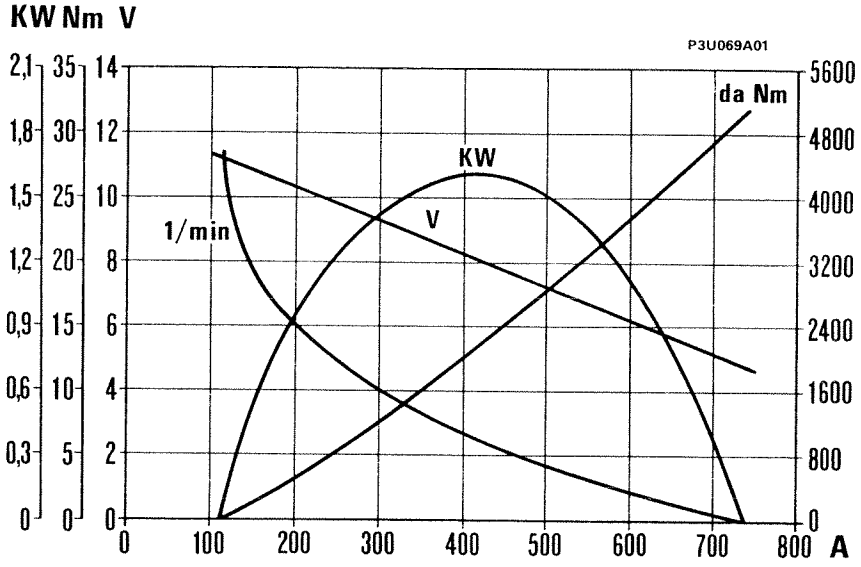

Bosch ∅ 74,5 - 12 V - 1,4 kW

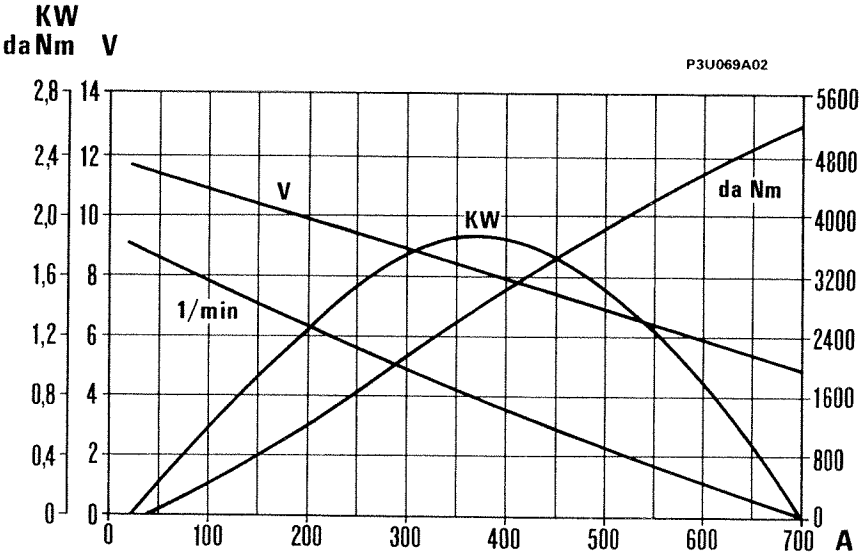

M. Marelli E 95R - 12 V - 2,2 kW

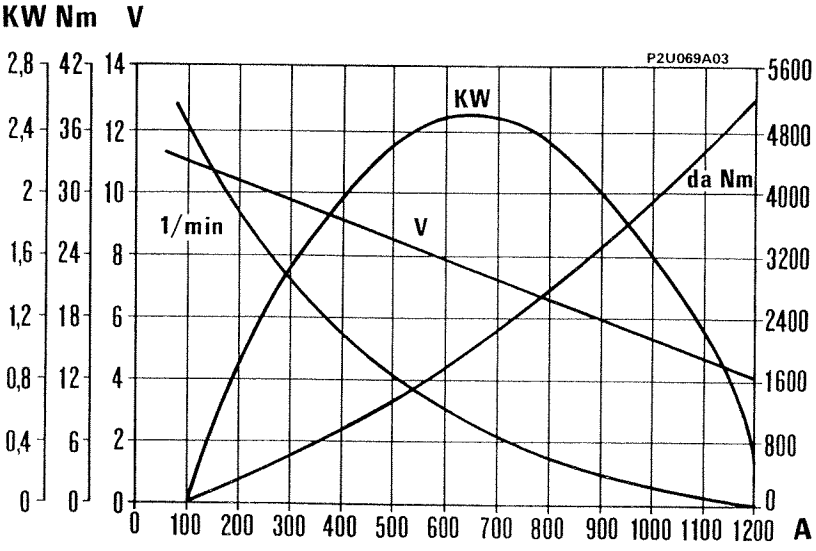

Copyright by Fiat Auto

		1998 20v, 2446 20v, 2387 TD	1995 16v turbo	(●) 1998 20v, (●) 2446 20v, 2959 V6 24v, 2387 TD
ALTERNATOR				
Type		M. Marelli A127I-14V-55/100A A127IR-14V-55/100A (▲)	Bosch N1 - 14V 40/115A	Bosch NC - 14V - 60/120A
Nominal voltage	V	14		
Nominal current at 1800 rpm	A	55	50	60
Cut in speed when warm	rpm	–	⩽1100	⩽1100
Current delivery on the battery at 7000 rpm at op. temp.	A	100	⩽115	> 120
Field winding resistance between the slip rings (*)	Ω	2,47 ÷ 2,73 (*)	2,6 ÷ 2,85 (**)	–
Direction of rotation (seen from control side)		clockwise		
Diode rectifiers		bridge		

(*) Data obtained at an ambient temperature of 20°C.
(**) Data obtained at an ambient temperature of 25°C
(●) For vehicles with air conditioning
(▲) 96 range versions

VOLTAGE REGULATOR		Built in electronic		
Type		24 TR/B RTM 151 A (▲)	Bosch EL - 14V - 4C	Bosch
Alternator speed for test	rpm	7000	6000	6000
Thermal stabilization current	A	50 ÷ 55	40 ÷ 45	55 ÷ 60
Test current	A	50 ÷ 55	40 ÷ 45	55 ÷ 60
Regulation voltage (*)	V	14,35 ÷ 14,55 (*)	14 ÷ 14,3 (*)	14,35 ÷ 14,65 (**)

(*) Data obtained at an ambient temperature of 20°C.
(**) Data obtained at an ambient temperature of 25°C.
(▲) 96 range versions

ALTERNATORS - WIRING DIAGRAMS AND TYPICAL OUTPUT CURVES
(at operating temperature at a constant voltage of 13.5 V with bedded in brushes)

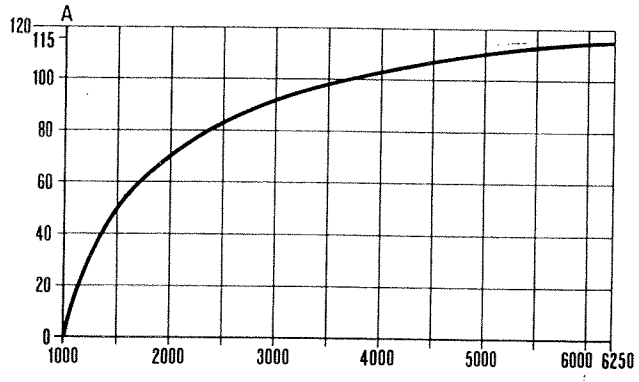

Bosch NC - 14 V - 60/120 A

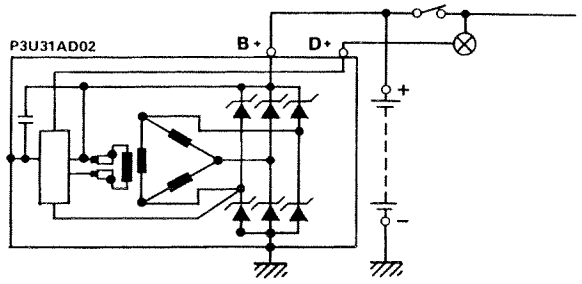

M. Marelli A 127I - 14V - 55/100A
M. Marelli A 127IR - 14V - 55/100A (▲)

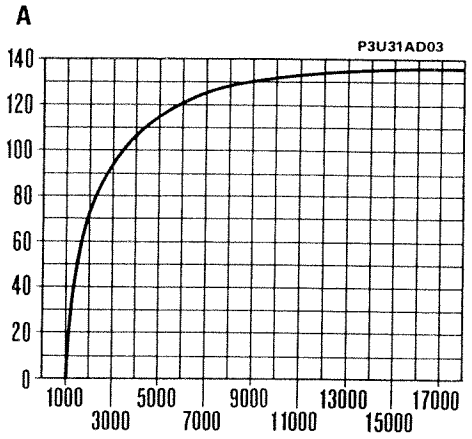

Bosch NC - 14 V - 60/120 A

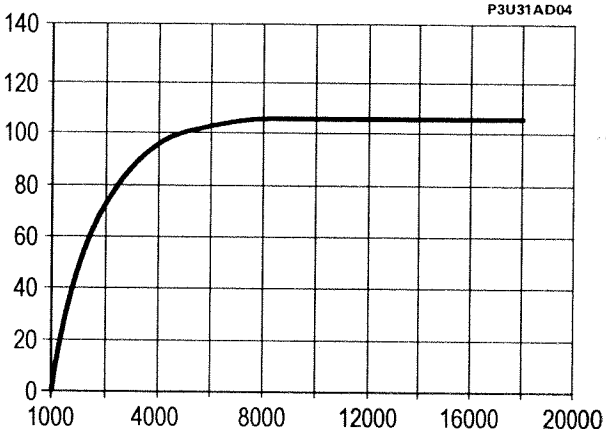

M. Marelli A 127IR - 14V - 55/100A

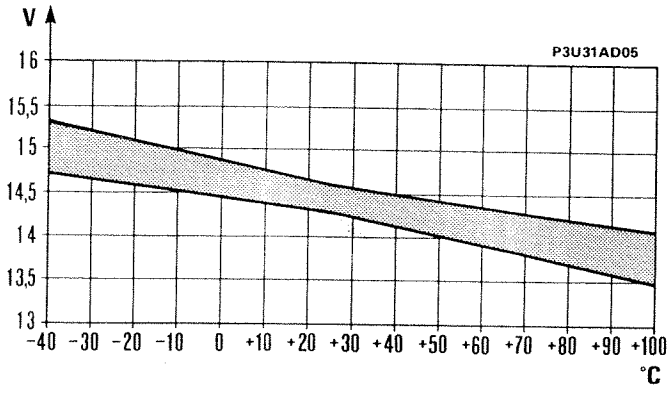

Typical regulator voltage curve for Bosch NC - 14V - 60/120A alternator

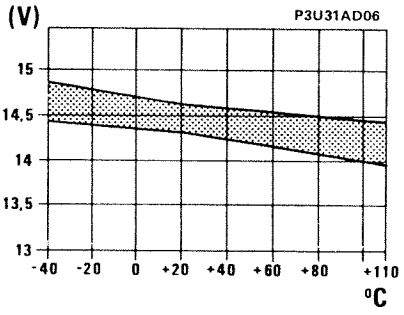

Typical regulator voltage curve for M. Marelli A 127IR - 14V 55/100A alternator

Copyright by Fiat Auto

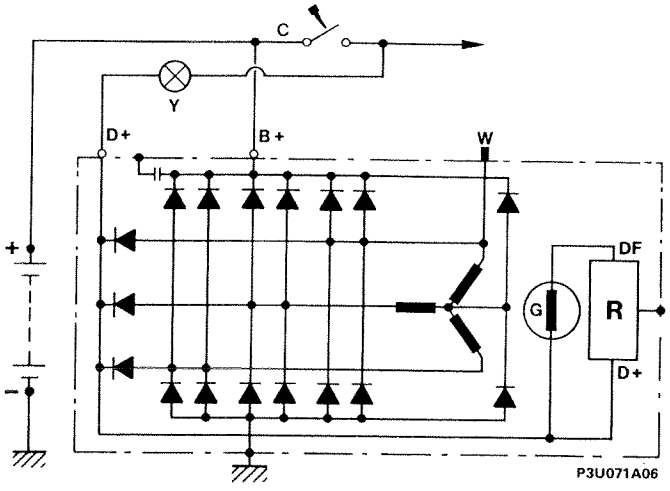

Bosch N1 - 14V - 40/115 A

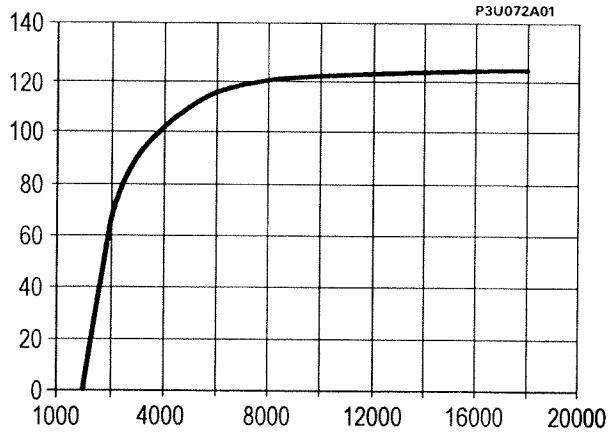

Bosch N1 - 14V - 40/115 A

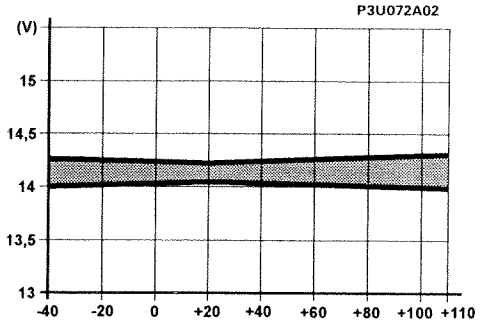

Typical voltage regulator curve for Bosch N1 - 14V - 40/115 A alternator

Copyright by Fiat Auto

BOSCH MOTRONIC M2.10 INTEGRATED ELECTRONIC INJECTION/IGNITION CONTROL MODULE	1998 20v	2446 20v
Make Bosch	0.261.203.670 B.261.623.053 (▲)	0.261.203.669
Firing order	1 - 2 - 4 - 5 - 3	

IGNITION COIL (1 PER SPARK PLUG)

Make		Bosch
Type		0.221.152.067
Ohmic resistance of primary winding at 20 °C	Ω	0,4
Ohmic resistance of secondary winding at 20 °C	Ω	8500

TDC AND RPM SENSOR

Make and type		Bosch 0.261.210.119
Sensor winding resistance at 20 °C	Ω	774 ÷ 946
Distance (gap) between sensor and crankshaft pulley tooth	mm	0,8 ÷ 1,5

DETONATION SENSOR

Make	Bosch	
Type	0.261.231.007	0.261.231.095 (▲)

SPARK PLUGS

Make and type		Champion RC7BNC
Thread		M 14 x 1,25
Electrode gap	mm	0,4 ÷ 0,6

(▲) 96 range versions

BOSCH M 2.7 INTEGRATED ELECTRONIC INJECTION/IGNITION SYSTEM CONTROL MODULE



16v turbo

Make and type	Bosch 0.261.203.792
Firing order	1 – 3 – 4 – 2

IGNITION COIL WITH 4 HIGH TENSION SOCKETS

Make		Bosch
Type		0.221.503.407
Ohmic resistance of primary winding at 20 °C	Ω	0,45 ÷ 0,55
Ohmic resistance of secondary winding at 20 °C	Ω	12000 ÷ 14600

DETONATION SENSOR

Make	Bosch
Type	0.261.231.095

TDC AND RPM SENSOR

Make and type		Bosch 0.261.210.093
Sensor winding resistance at 20 °C	Ω	486 ÷ 594
Distance (gap) between sensor and crankshaft pulley tooth	mm	0,7 ÷ 1,2

SPARK PLUGS

Make and type		Bosch WR6 DTC
Thread		M 14 x 1,25
Electrode gap	mm	0,8 ÷ 1

Copyright by Fiat Auto

BOSCH MOTRONIC M3.7 INTEGRATED ELECTRONIC INJECTION/IGNITION SYSTEM CONTROL MODULE	2959 V6 24v	(▲) 2959 V6 24v
Make and type	Bosch B.261.207.798	Bosch 0.261.203.482
Firing order	1 - 4 - 2 - 5 - 3 - 6	

IGNITION COIL (1 PER SPARK PLUG)

Make		Bosch	
Type		A.221.152.064-017	0.221.504.456
Ohmic resistance of primary winding at 20 °C	Ω	-	
Ohmic resistance of secondary winding at 20 °C	Ω	-	

T.D.C. SENSOR

Make and type		Bosch 0.261.210.113	Bosch 0.261.210.104
Sensor winding resistance at 20 °C	Ω	486 ÷ 594	–
Distance (gap) between sensor and crankshaft pulley tooth	mm	0,2 ÷ 1,2	–
Distance (gap) between sensor and flywheel tooth	mm	–	0,8 ÷ 1,5

DETONATION SENSORS

Make and type	Bosch 0.261.231.007	Bosch 0.261.231.095 Bosch 0.261.231.007

CYLINDER RECOGNITION AND TIMING SENSOR

Make and type	Bosch B 232.090.211	Bosch 0 232.103.009

ADVANCE ON ENGINE

With engine idling (700 ± 50 rpm)	0° ± 3°	–

SPARK PLUGS

Make and type		NGK PFR6B
Thread		M14 × 1,25
Electrode gap	mm	0,6 ÷ 0,7

(▲) 96 range versions

Tool number	DESCRIPTION OF TOOL	ENGINE				
		1998 20v	2446 20v	1995 16v turbo	2959 V6 24v	2387 TD
ENGINE						
1840207814	Tool (18-22 mm dia.) to remove counter-rotating shaft front bearings (to be used with 1840206000)			●		
1842128000	Tool for extracting injection pump drive pulley					●
1846011000	Tool for extracting rear bearing cap (to be used with 1860782000)				●	
1850087000	Spanner for spark plugs			●		
1850088000	Spanner (13 mm) for adjusting manifold fixing nuts			●		
1850113000	Spanner (14 mm) for engine oil drain plug			●		
1850132000	Spanner (13 mm), with 1/2" socket, for removing inlet manifold fixings	●	●			
1850184000	Spanner for removing and refitting spark plugs	●	●		●	
1852128000	Tool for removing and refitting injectors					●
1852138000	Spanner for adjusting injector pipe pressure unions					●
1852150000	Spanner for bolts fixing tappet covers		●	●		
1852153000	Spanner (12 mm) for removing and refitting accelerator cable			●		
1852154000	Spanner for cylinder head tightening	●	●			●
1852159000	Spanner for removing and refitting belt tensioner	●	●			●
1852160000	Spanner for ante-chamber plug					●
1852161000	Spanner for timing variator	●	●			
1852162000	Spanner for alternator pulley	●	●		●	
1852163000	Spanner for alterntor pulley					●

Copyright by Fiat Auto

Tool number	DESCRIPTION OF TOOL	ENGINE				
		1998 20v	2446 20v	1995 16v turbo	2959 V6 24v	2387 TD
1852164000	Spanner for adjusting camshaft pullies				●	
1854050000	Spanner for speedometer sensor	●	●	●	●	●
1857511000	Spanner for coolant gas pipe union	●	●	●	●	●
1860054000	Drift (∅ 22 mm) for removing and refitting connecting rod pin bush			●		
1860162000	Pressure gauge with unions for checking engine oil pressure (scale 0-9,81 bar)				●	
1860183000	Pliers (∅ 75-110 mm) for removing and refitting piston circlips	●	●	●	●	●
1860251000	Drift for removing gudgeon pin from piston				●	
1860224000	Tool for refitting gasket on camshaft					●
1860303000	Tool for fitting gudgeon pin circlips on piston				●	
1860313000	Drift for fitting oil seal on valve guide	●	●			●
1860395000	Drift for removing valve guides	●	●	●	●	●
1860443000	Lever to insert tappet retainer during valve clearance adjustment			●		●
1860454000	Drift for fitting oil seal on valve guide	●	●	●	●	
1860456000	Support for cylinder head whilst replacing tappet shims (operation in the vice)			●		
1860470000	Support for cylinder head whilst overhauling	●	●	●		●
1860486000	Drift for refitting valve guides			●		
1860490000	Valve leakage test equipment 1895868000 (to be used with 1860470000)			●		
1860592000	Universal hook for lifting and moving engine-gearbox unit			●		

Tool number	DESCRIPTION OF TOOL	ENGINE				
		1998 20v	2446 20v	1995 16v turbo	2959 V6 24v	2387 TD
1860592010	Element for removing-refitting engine/gearbox assembly (to be used with 1860592000)			●		
1860644000	Tool for removing and refitting valves			●		●
1860699000	Drift for fitting crankshaft rear oil seal (to be used with 1870007000)			●		
1860700000	Band (∅ 60 - 125 mm) for fitting normal and oversize pistons in cylinders	●	●	●	●	●
1860724000	Tool for retaining tappets whilst replacing shims					●
1860745100	Tool for tensioning toothed belts (to be used with specific tools)			●		
1860745200	Tool for timing system toothed belt tensioning (to be used with 1860745100)			●		
1860745400	Tool for tensioning counter-balance shaft drive belt (to be used with 1860745100)			●		
1860747000	Tool for retaining tappets whilst replacing shim during adjustment of valve clearance (to be used with 1860443000)			●		
1860757000	Tool for removing cartridge oil filter				●	
1860758000	Tool for removing cartridge oil filter	●	●	●		●
1860765000	Tool for retaining camshaft pulley or auxiliary shaft pulley during adjustment of fixing bolt			●		●
1860768000	Tool for rotating crankshaft on vehicle			●		
1860769000	Support for cylinder head whilst removing and refitting valves			●		
1860770000	Drift for fitting camshaft gaskets and crankshaft front gasket			●		
1860779000	Flywheel lock (at the bench)				●	
1860780000	Tool for fitting crankshaft front oil seal				●	
1860782000	Fork for extracting rear bearing cap (to be used with 1846011000)				●	

Copyright by Fiat Auto

Tool number	DESCRIPTION OF TOOL	ENGINE				
		1998 20v	2446 20v	1995 16v turbo	2959 V6 24v	2387 TD
1860783000	Support for cylinder head during overhaul				●	
1860784000	Tool for supporting and locking cylinder head				●	
1860785000	Drift for fitting camshaft seals				●	
1860786000	Tool for supporting valves				●	
1860787000	Special tool for supporting valves				●	
1860788000	Tool for removing and refitting valves				●	
1860790000	Lever for removing and refitting valves				●	
1860794000	Tool for fitting rear bearing support pipes				●	
1860810000	Pin for combustion ante-chamber timing					●
1860812000	Tool for refitting valve guides	●	●		●	●
1860813000	Guide for fitting oil seal on valve guide	●	●			
1860814000	Drift for fitting oil seal on valve guide					●
1860815000	Adaptor for rotating crankshaft	●	●		●	●
1860816000	Drift for fitting oil pump gasket	●	●			●
1860817000	Tool for centering crankshaft cover gaskset	●	●			●
1860818000	Tools for camshaft timing	●				
1860819000	Tools for camshaft timing		●			
1860820000	Tools for camshaft timing				●	

Tool number	DESCRIPTION OF TOOL	ENGINE TYPE				
		1998 20v	2446 20v	1995 16v turbo	2959 V6 24v	2387 TD
1860821000	Tool for removing small end bush	●	●			●
1860822000	Tool for timing oil pump	●	●			●
1860823000	Pulley for removing and refitting power unit	●	●		●	●
1860823001	Set of adaptors for pulley	●	●		●	●
1860824000	Tool for fitting camshaft element	●	●			●
1860825000	Bracket with counter-weight for tensioning timing drive belt		●		●	●
1860826000	Bush for tensioning auxiliary shaft drive belt		●		●	●
1860827000	Bush for tensioning timing drive belt				●	
1860828000	Tool for removing SUBAKI tensioner (auxiliary shaft drive belt)				●	
1860829000	Adjustable bolts for securing cylinder liners/bores				●	
1860830000	Pin for SUBAKI tensioner				●	
1860831000	Spanner for rotating camshaft pullies	●	●		●	
1860832000	Spanner for tightening cylinder head fixing nuts				●	
1860833000	Spanner for removing-refitting oil sump	●	●			●
1860834000	Spanner for removing-refitting oil sump	●	●			●
1860835000	Tool for removing oil seal on valve guide	●	●		●	●
1860836000	Tool for locking rotation of crankshaft	●	●			●
1860839000	Pin for timing belt tensioner				●	

Copyright by Fiat Auto

Tool number	DESCRIPTION OF TOOL	ENGINE TYPE				
		1998 20v	2446 20v	1995 16v turbo	2959 V6 24v	2387 TD
1860840000	Tool for removing valves (to be fitted to lever 1860790000)				●	
1860841000	Flywheel lock (on vehicle)				●	
1860842000	Tool for fitting oil pump idler bushes				●	
1860843000	Tool for fitting crankshaft seal (flywheel side)				●	
1860844000	Tool for fitting camshaft seal, timing side	●	●			
1860846000	Flywheel lock	●	●			
1860856000	Spanner for adjusting timing pulley, inlet side	●	●			
1860905000	Tool for determining T.D.C.					●
1860942000	Torque wrench for angular tightening	●	●			
1860961000	Tools for camshaft timing	●				
1861001011	Pair of brackets for fixing engine to rotating stand			●		
1861001038	Pair of brackets for fixing engine to rotating stand				●	
1861001039	Pair of brackets for fixing engine to rotating stand	●	●			●
1865090000	Tool for checking start of delivery of fuel injection pump during timing (to be used with 1895884000)					●
1867028000	Pair of threaded pins for rotating crankshaft (at the bench)			●		
1867029000	Flywheel lock	●	●	●		●
1867030000	Tool to hold flywheel when handling crankshaft pulley nut - manual gearbox			●		
1870404000	Support for dial gauge for measuring recesses or projections for cylinder liners/bores	●	●		●	●

Tool number	DESCRIPTION OF TOOL	ENGINE TYPE				
		1998 20v	2446 20v	1995 16v turbo	2959 V6 24v	2387 TD
1890385000	Reamer for valve guide openings	●	●	●	●	
1895868000	Valve leakage test equipment	●	●	●		●
1895879000	Tool for checking T.D.C. for piston for cylinder no. 1° (to be used with 1895881000)	●	●		●	
1895882000	Dial gauge for measurements (to be used with support 1870404000)	●	●		●	●
1895897000	Graduated disc for angular tightening of cylinder head fixing nuts	●	●	●	●	↙
CLUTCH						
1870081000	Guide pin for centering clutch disc		●	●		●
1870447000	Guide pin for centering clutch disc				●	
1875029000	Guide pin for centering clutch disc	●	●			
1875084000	Tool for removing thrust bearing from clutch engagement mechanism	●	●	●	●	●
GEARBOX - DIFFERENTIAL						
1845062000	Tool to remove front axle shaft constant velocity joint (to be used with 1847017001)	●	●	●	●	●
1846001000	Half rings to withdraw gearbox main shaft bearing (engine side) (to be used with 1846017000)	●	●	●	●	●
1846002000	Half rings for extracting lay shaft bearing, pinion side (to be used with 1846017000)	●	●		●	●
1847017004	Plate for extracting flanged shaft from planet gear (to be used with 1847017001)	●	●	●	●	●
1854036000	Tool for removing-removing oil filter (automatic gearbox)				●	
1855166000	Tool for removing-refitting drive shaft (automatic gearbox)				●	
1860837000	Plate for removing lay shaft bearing	●	●	●	●	●
1860870000	Connector for AISIN automatic gearbox oil pressure check pipe	●				

Copyright by Fiat Auto

Tool number	DESCRIPTION OF TOOL	ENGINE TYPE				
		1998 20v	2446 20v	1995 16v turbo	2959 V6 24v	2387 TD
1870100000	Drift for fitting seal				●	
1870438000	Tool for extracting differential casing bearing inner races	●	●	●	●	●
1870595000	Power unit cross member	●	●	●	●	●
1870597000	Drift for fitting seal	●	●	●	●	●
1870600000	Tool for supporting gearbox during removal	●	●	●	●	●
1871001014	Support for gearbox-differential unit whilst overhauling (to be fitted to 1861000000 or 1871000000)	●	●	●	●	●
1875017000	Tool for removing and refitting differential bearing races (to be used with 1840005003)	●	●	●	●	●
1875087000	Pair of handles for removing converter (automatic gearbox)				●	
1875088000	Drift for fitting speedometer ring (automatic gearbox)				●	
1875089000	Drift for fitting left flanged shaft bearing in cover (automatic gearbox)				●	
1875090000	Tool for retaining left shaft flange whilst adjusting ring nut (automatic gearbox)				●	
1875091000	Tool for adjusting position of selector spring (automatic gearbox)				●	
187509200	Tool for checking clearance between stop cam and gearbox casing (automatic gearbox)				●	
1875093000	Drift for fitting radial seal on gearbox casing front cover (automatic gearbox)				●	
1881124000	Pliers for adjusting main and lay shaft rear bearing outer races	●	●	●	●	●
1895411000	Gas pipes and connectors - 1/4" for checking automatic transmission oil pressure	●			●	
1895424000	Pressure gauge (0-25 bar) for checking automatic transmission oil pressure	●			●	
1895434000	1/4" gas connector M 10 × 1 for automatic transmission pressure pipe	●			●	

Tool number	DESCRIPTION OF TOOL	ENGINE TYPE				
		1998 20v	2446 20v	1995 16v turbo	2959 V6 24v	2387 TD
1895655000	Tool to select differential bearing adjusting shims (to be used with 1895884000)	●	●	●	●	●
BRAKING SYSTEM						
1856132000	Spanner (10-11 mm) for adjusting brake fluid pipe unions	●	●	●	●	●
1856134000	Spanner, with 1/2" socket", for adjusting rear brake caliper self-adjusting device	●	●	●	●	●
STEERING						
1840207814	Tool for removing rubber bearing	●	●	●	●	●
1847035000	Puller for steering rod ball pins	●	●	●	●	●
1847218000	Tool for removing steering wheel	●	●	●	●	●
1870296000	Tool for refitting bearing	●	●	●	●	●
SUSPENSION WHEELS						
1846018000	Tool for extracting rear suspension stabilizer bar flexible bush	●	●	●	●	●
1860973000	Spanner for tightening shock absorber mounting	●	●	●	●	●
1857168000	Spanner for tightening shock absorber mounting	●	●	●	●	●
1857509000	Spanner for removing nut on mounting	●	●	●	●	●
1860838000	Tool for refitting rear bush	●	●	●	●	●
1867013000	Tool for refitting hub	●	●	●	●	●
1870294000	Drift for refitting bearing	●	●	●	●	●
1874555000	Pneumatic tool for compressing suspension springs	●	●	●	●	●
1875055000	Drift for refitting wheel hub bearings	●	●	●	●	●

Copyright by Fiat Auto

Tool number	DESCRIPTION OF TOOL	ENGINE TYPE				
		1998 20v	2446 20v	1995 16v turbo	2959 V6 24v	2387 TD

ORDINARY TOOLS

1840005000	Puller, universal	●	●	●	●	↙
1840206000	Percussion extractor (to be used with specific tools)	●	●	●	●	●
1846017000	Base for puller half-rings	●	●	●	●	●
1847017001	Percussion extractor (to be used with specific tools)	●	●	●	●	●
1861000000	Rotating stand for overhauling engine (also used for gearboxes and differentials)	●	●	●	●	●
1861000001	Pair of sections for brackets supporting the engine on rotating stand 1861000000	●	●	●	●	●
1870007000	Universal handle	●	●	●	●	●
1870404000	Support for measuring recesses and projections (to be used with 1895881000)	●	●	●	●	●
1871000000	Rotating column for overhauling gearboxes and differentials	●	●	●	●	●
1876048000	Tool for removing MINI HYLOK CONTACT (MHF) ∅ 2,15 mm type terminals	●	●	●	●	●
1881138000	Adjustable pliers for pipe restriction bands and tabs	●	●	●	●	●
1882002010	Tool panel to be fixed to wall or stand 1882003000 (with hooks)	●	●	●	●	●
1882003000	Stand to hold two tool panels	●	●	●	●	●
1882011000	Set of additional hooks (50) for tool panel	●	●	●	●	●
1895113000	Feeler gauge (0.05-0.10 ... 0.80 mm) for checking various clearances	●	●	●	●	●
1895881000	Dial gauge to be used with specific tools (measuring capacity mm 10; shank length mm 16,7)	●	●	●	●	●
1895882000	Dial gauge to be used with specific tools (measuring capacity mm 10; shank length mm 88)	●	●	●	●	●
1895884000	Dial gauge to be used with specific tools (measuring capacity mm 5; shank length mm 16,5)	●	●	●	●	●

DESCRIPTION	Thread size	Tightening torques	ENGINE TYPE		
		daNm	1998 20v	2446 20v	2387 TD
ENGINE					
Bearing cap fixing, bolt	M12	2,5+100°	●	●	●
Shield fixing, bolt (dust shield)	M6	0,9	●	●	●
Sump oil drain plug	M18 × 1,5	2	●	●	●
Oil sump fixing, bolt	M6	0,9	●	●	●
	M8	2,5			
Alternator mounting, power steering, connecting rod to cylinder block/crankcase fixing, bolt	M8	2,5	●	●	●
	M10 × 1,5	5			
Lytens moving belt tensioner fixing, nut for bolt	M8	2,5	●	●	●
Engine support and air conditioning compressor to cylinder block/crankcase fixing, bolt	M10 × 1,25	5	●	●	●
Automatic belt tensioner to alternator mounting fixing, bolt	M8	2,5	●	●	●
	M10 × 1,5	7			
Fixed belt tensioner to air conditioning support fixing, bolt	M10 × 1,25	5	●	●	●
Fixed belt tensioner to alternator mouting fixing, bolt	M8	2,5	●	●	●
Complete belt tensioner to support fixing, bolt (for versions with air conditioning)	M10 × 1,25	5	●	●	●
Belt tensioner to engine support fixing, bolt	M8	2,5	●	●	
Fixed belt tensioner to engine support fixing, bolt	M10 × 1,25	5	●	●	
Connecting rod plate to cyl. block/crankcase fixing, bolt	M10 × 1,25	5	●	●	
	M8	2,5			
Engine support to cylinder block/crankcase fixing, bolt	M10 × 1,25	5	●	●	
Cylinder head to cylinder block/crankcase fixing, bolt	M10 × 1,25	4+270°	●	●	
	M12 × 1,25	6,5+270°			●
Caps to cylinder head fixing, bolt	M7	1,5	●	●	●
Tappet cover to cylinder head fixing, bolt	M6	0,9	●	●	●

Copyright by Fiat Auto

DESCRIPTION	Thread size	Tightening torques	ENGINE TYPE		
		daNm	1998 20v	2446 20V	2387 TD
Coil cover to tappet cover fixing, bolt	M 6	0,9	●	●	
Multi-polar mounting bracket to tappet cover fixing, bolt	M 6	0,9	●	●	
Inlet manifold to cylinder head fixing and centre section fixing, nut	M 8	2,5		●	●
Reaction bracket to manifold and drive shaft support fixing, bolt	M 8	2,5	●	●	●
Upper section of manifold to lower section fixing, bolt	M 8	2,5	●	●	
Inlet manifold mounting bracket and cable duct fixing, nut	M 8	2,5	●	●	
Exhaust manifold to cylinder head fixing, nut	M 8	2,5	●	●	●
Connecting rod caps fixing, bolt	M 9	2,5 + 60°	●	●	●
Engine flywheel fixing, bolt	M 12	16	●	●	●
Crankshaft gear left fixing, bolt	M 16	36	●	●	●
Flywheel damper to gear fixing, bolt	M 8	2,5	●	●	
Exhaust gear to camshaft fixing, bolt	M 12	12	●	●	
Timing belt tensioner fixing, bolt	M 10	5	●	●	●
Inlet gear to phase transformer fixing, bolt	M 6	0,9	●	●	
Electric sensor to crankcase and Hall sensor to cylinder head fixing, bolt	M 6	0,9	●	●	
Oil pump to crankcase fixing, bolt	M 6	0,9	●	●	●
Complete nozzle to crankcase fixing, bolt	M 6	0,9	●	●	●
Connector for fixing heat exchanger	M20	3	●	●	

DESCRIPTION	Thread size	Tightening torques daNm	ENGINE TYPE 1998 20V	2446 20V	2387 TD
Water pump to cylinder head fixing, bolt	M 8	2,5	●	●	●
Coolant return pipe from heater to cylinder head fixing, bolt	M 10 × 1,25	5	●	●	
Coolant supply pipe to crankcase fixing, bolt	M 12 × 1,25	5	●	●	
Coolant supply pipe to crankcase and inlet manifold fixing, bolt	M 8	2,5	●	●	
Coolant inlet pipe to cylinder head fixing, bolt	M 6	0,9	●	●	
	M 10	5			
Thermostat to cylinder head fixing, bolt	M 8	2,5	●	●	
	M 7	1,5			●
Air conditioning compressor to engine support fixing, bolt	M 10	5	●	●	●
Alternator fixing, nut	M 10	5	●	●	●
	M 12	7			
Drive shaft support fixing, bolt	M 10 × 1,25	5	●	●	●
Alternator reaction bracket to drive shaft fixing, bolt	M 10 × 1,25	5	●	●	●
Sump and drive shaft support, nut for bolt	M 8	2,5	●	●	●
Power steering pump to connecting rod support fixing, bolt	M 8	2,5	●	●	●
Pulley to power steering pump fixing, bolt	M 8	2,5	●	●	●
Coolant temperature sender unit fixed on cylinder head	M 16 × 1,25	2,5	●	●	●
Oil pressure switch fixed on cylinder block/crankcase	M 14 × 1,5	2,2	●	●	●
Injection oil level sender unit fixed on oil sump	M 12 × 1,5	2	●	●	
Coolant temperature sender unit fixed on thermostat	M 12 × 1,5	2	●	●	
Coolant temperature sender unit fixed on thermostat (version with automatic transmission)	M 12 × 1,5	2	●		

Copyright by Fiat Auto

DESCRIPTION	Thread size	Tightening torques daNm	ENGINE TYPE 1998 20v	2446 20V	2387 TD
Detonation sensor to crankcase fixing, bolt	M 8	2,5	●	●	
Ignition coil fixing, bolt	M 6	0,9	●	●	
Spark plug	M 14 × 1,25	2,7	●	●	
Injectors fixing, ring nut	M 35	12			●
Auxiliary shaft drive pulley to crankshaft fixing, bolt	M 8	2,5			●
Drive gear to camshaft fixing, bolt	M 12	12			●
Injection pump to support fixing, bolt	M 8	2,5			●
Injection pump to crankcase fixing, bolt	M 8	2,5			●
Injection pump to inlet manifold fixing, bolt	M 8	2,5			●
Reaction bracket to injection pump fixing, nut	M 8	2,5			●
Injection pump gear fixing, nut	M 14	5			●
Complete injector	M 24	5,5			●
Fuel filter to inlet manifold fixing, nut	M 8	2,5			●
Turbocharger to exhaust manifold fixing, nut	M 8	2,5			●
Exhaust manifold connector to turbocharger fixing, nut	M 8	2,5			●
Filler for oil supply pipe to turbocharger	M 10 M 12	1,5			●
Connector for fixing thermostatic valve	M 20	3			●
Air vacuum pump to cylinder head fixing, bolt	M 8	2,5			●

DESCRIPTION	Thread size	Tightening torques	ENGINE TYPE		
		daNm	1998 20V	2446 20V	2387 TD
EGR valve to exhaust manifold fixing, nut	M 8	2,5			●
Pipe to EGR valve fixing, bolt	M 8	2,5			●
Air pressure switch on turbocharger	M 12	2			●
Oil level sender unit on engine sump	M 12 × 1,25	2			●
Heater plug	M 12 × 1,25	1,5			●

Copyright by Fiat Auto

DESCRIPTION	Thread size	Tightening torques daNm
ENGINE		
Centre cap to crankcase fixing, bolt	M 12 × 1,25	2 + 130°
Caps to cylinder block/crankcase fixing, bolt	M 12 × 1,25	2 + 90°
Support to torque fixing, bolt	M 12 × 1,25	9,5
Cylinder head to crankcase fixing, bolt	M 10 × 1,25	7 + 90° + 90°
Inlet manifold to cylinder head fixing, nut	M 8	2,5
Exhaust manifold fixing, nut	M 8	2,9
Connecting rod caps fixing, bolt	M 10 × 1	2,5 + 50°
Flywheel to crankshaft fixing, bolt	M 12 × 1,25	14,2
Timing gear and pulley to crankshaft fixing, bolt (*)	M 14 × 1,5 Left	19
Timing gear fixing, bolt	M 12 × 1,25	11,8
Belt tensioner fixing, nut	M 10 × 1,25	4,4
Accelerator reaction bracket to inlet manifold fixing, bolt	M 8	2,5
Turbocharger to exhaust manifold fixing, flanged nut	M 10 × 1,5	5,9
Union to turbocharger fixing, nut	M 10 × 1,25	5,9
Turbocharger mounting bracket to crankcase fixing, bolt	M 8	2,9
Turbocharger mounting bracket and exhaust pipe mounting bracket to crankcase fixing, bolt	M 8	2,9
Oil supply pipe to turbine fixing, bolt	M 8	2,3
Filler for adjustable union fixing oil supply pipe to oil filter mounting	M 14 × 1,5	5
Oil supply pipe bracket to exhaust manifold fixing, bolt	M 10 × 1,25	4,3

(*) The bolt should not be lubricated

DESCRIPTION	Thread size	Tightening torques daNm
Oil return pipe from turbocharger to sump fixing, bolt	M 8	2,3
Filler for adjustable union fixing coolant supply and return pipe to turbocharger	M 16 × 1,5	3,2
Complete pipe for engine oil level dip stick fixing, bolt	M 8	2,5
Oil filter, alternator and engine mounting to crankcase fixing, bolt	M 10 × 1,25	4,3
Plug for thermostatic valve on oil filter mounting	M 35 × 1,5	11,8
Water pump to crankcase fixing, bolt	M 8 × 1	2,5
Water pump union to casing fixing, bolt	M 8	2,3
Coolant return pipe to inlet manifold fixing, nut	M 8	2,3
Coolant thermostat to cylinder head fixing, nut	M 8	2
Water pump drive pulley to hub fixing, bolt	M 8	2,5
Support for alterantor belt tensioner fixing, bolt	M 10 × 1,25	4,3
Alternator and power assisted mounting to crankcase fixing, bolt	M 10 × 1,25	4,3
Alternator and power assisted mounting to crankcase fixing, nut	M 10 × 1,25	4,3
Alternator and power assisted mounting to crankcase fixing, bolt	M 8	2,5
Alternator bracket to mounting fixing, bolt	M 10 × 1,25	4,3
Alternator bracket fixing, nut	M 10 × 1,25	4,3
Alternator to mounting fixing, nut for bolt	M 12 × 1,25	6,9
Front bracket to power assisted steering pump fixing, bolt	M 8	2
Front bracket & complete bracket for belt shield to power steering pump fixing, bolt	M 8	2

Copyright by Fiat Auto

DESCRIPTION	Thread size	Coppie di serraggio daNm
Rear bracket to power assisted steering pump fixing, bolt	M 8	2
Front and rear bracket to mounting fixing, bolt	M 10 × 1,25	4,3
Spark plugs	M 14 × 1,25	3,7
Engine oil temperature sender unit	M 14 × 1,5	2,5
Engine coolant temperature sender unit	M 16 × 1,5 tapered	3
Engine oil pressure switch	M 14 × 1,5	3,2
Engine oil level sender unit	M 12 × 1,25	2,5
Engine oil sump plug	M 22 × 1,5 tapered	5
Gear to counter balance shaft fixing, bolt	M 12 × 1,25	11,8
Cover for counter balance shaft fixing, bolt	M 8	2,3
Counter balance shaft belt tensioner fixing, nut	M 8	2,3
Cover for counter-balance shaft radial support seal fixing, bolt	M 8 × 1,25	2,4

DESCRIPTION	Thread size	Tightening torques daNm

ENGINE

Oil duct cap in crankcase	M 16 × 1,5 M 17 × 1,5	3,2
Main bearing caps fixing, nut (*)	M 12 × 1,5	8,83
Oil filter casing union	M 20 × 1,5	8
Coolant drain plug in crankcase	M 14 × 1,5	3
Oil sump fixing, bolt	M 7	1,5
Oil sump internal partition fixing, bolt	M 6	0,6
Camshaft supports fixing, bolt	M 8	1,9
Engine raising hook fixing, bolt	M 10 × 1,25	3
Engine mounting fixing, nut	M 8	2,2
Attachment plate fixing, nut	M 10 × 1,25	4
Cylinder head fixing, nut	M 12 × 1,5	2,5 + 240°
Sump oil drain plug	M 22 × 1,5	7,5
Front cover fixing, bolt	M 10 × 1,25 M 6	4 0,87
Electro-magnetic sensor mounting fixing, bolt	M 6	0,75
Electro-magnetic sensor to support fixing, bolt	M 6	0,75
Timing belt covers fixing, bolt	M 6	0,75
Timing belt covers, nut	M 6	0,51
Detonation sensor fixing, bolt	M 8	2,2
Side frame fixing, bolt	M 6	0,75

(*) The tightening should be carried out after having lubricated the components with engine oil.

Copyright by Fiat Auto

DESCRIPTION	Thread size	Tightening torques daNm
Cylinder head cover fixing, bolt	M 7	1,23
Inlet fixing, bolt	M 6	0, 51
Supply ducts fixing, bolt	M 6	0,75
Right and left plate fixing, bolt	M 6	0,75
Injector holder manifold fixing, bolt	M 6	2,2
Exhaust manifold fixing, nuts	M 8	2,55
Centre frame and right sector fixing, bolt	M 6	0,75
Main bearing caps fixing, bolt (*)	M 9 × 0,75	5,62
Crankshaft flywheel for vehicles with manual and automatic transmission fixing, bolts (**)	M 12 × 1,25	12,25
Pulley to crankshaft fixing, nut (*)	M 28 × 1,5	23,54
Pulley to crankshaft fixing, bolt	M 10 × 1,25	8
Timing cover fixing, bolt	M 8	2,2
Left head cover fixing, bolt	M 6	0,51
Butterfly casing fixing, bolt	M 7 × 1	1,4
Accelerator cable attachment plate fixing, bolt	M 6	0,51
Oil separator mounting bracket fixing, bolt	M 6	0,75
Fuel pressure regulator fixing, bolt	M 6	0,51
Bearing on fixed belt tensioner plate fixing, nut	M 10 × 1,25	5
TSUBAKI tensioner fixing, nut	M 8	2,2

(*) The tightening should be carried out after having lubricated the components with engine oil. (**) Use Loctite 270

DESCRIPTION	Thread size	Tightening torques daNm
TSUBAKI tensioner bearing fixing, nut	M 10 × 1,25	7,5
Moving belt tensioner plate fixing, nut	M 8	2,2
Moving belt tensioner plate fixing, bolt	M 8	2,2
Complete belt tensioner mounting fixing, nut with flange	M 10 × 1,25	5
Tensioner bearing fixing, bolt	M 10 × 1,25	5
Fixed tensioner support fixing, bolt	M 8	2,2
Complete tensioner bearing fixing, bolt	M 8	2,2
Tensioner piston fixing, nut	M 8	2,2
Tensioner bearing to cylinder head fixing, bolt	M 10 × 1,25	5
Cam angle sensor fixing, bolt	M 6	0,75
Right and left fuel manifold fixing, bolt	M 6	0,75
Ignition coil fixing, bolts	M 6	0,75
Spark plugs	M 14 × 1,25	3,2
Oil pump to crankcase fixing, bolt	M 8	2,2
Oil pump upper shaft fixing, nuts	M 6	0,51
Element to pump casing fixing, bolts	M 6	0,75
Element bracket to oil sump fixing, bolts	M 6	0,75
Oil pump cover fixing, bolts	M 7	1,1
Union on crankcase for oil level dip stick pipe	M 14 × 1,25	8

Copyright by Fiat Auto

DESCRIPTION	Thread size	Tightening torques daNm
Oil filter	3/4"	1,87
Oil level dip stick pipe on crankcase union fixing, nut	M 16 × 1,5	2,5
Thermostatic valve	M 30 × 1,5	8,8
By-pass valve cap	M 22 × 1,5	3,5
Oil filter mounting to crankcase fixing, nut	M 8	2,2
Oil mounting to crankcase fixing, bolt	M 8	2,2
Timing idler pulley fixing, bolts	M 8	2,21
Oil pump driven gear fixing, nut	M 14 × 1,5	9,3
Alternator mounting, bolt	M 10 × 1,25	5
Alternator to mounting fixing, bolt	M 8	2,2
Power assisted steering pump mounting fixing, nut	M 8	2,2
Power assisted steering pump to mounting fixing, bolts	M 8	2,2
Power assisted steering pump bracket fixing, bolt	M 8	2,2
Power assisted steering pump pulley fixing, bolt	M 6	0,75
Oil pressure sender unit	M 10 × 1	1,1
Oil pressure switch	M 14 × 1,5	2,4
Engine coolant temperature sender unit with alarm contact	M 18 × 1,5	2,85
Water pump fixing, bolt	M 6	0,87
Engine coolant inlet filler fixing, bolt	M 6	0,87

DESCRIPTION	Thread size	Tightening torques daNm
Cover with thermostat fixing, bolt	M 7	1,1
Engine coolant pipe mounting bracket fixing, bolt	M 8	1,42
Engine coolant pipe fixing, bolt	M 6	0,75
Engine coolant supply union to heater fixing, bolt	M 6	0,51
Water pump pulley fixing, bolt	M 6	0,51
Engine coolant temperature sender unit	M 12 × 1,5	1,4
Constant idle actuator mounting fixing, bolt	M 6	0,6
Bracket with belt tensioner pulley fixing, nut	M 10 × 1,25	5
Lambda sensor	M 18 × 1,5	5,8
Complete front and rear bracket for air conditioning compressor fixing, bolt	M 10 × 1,25	3,35
Air conditioning compressor to brackets fixing, nut	M 10 × 1,25	5

Copyright by Fiat Auto

DESCRIPTION	Thread size	Tightening torques daNm

ENGINE EXHAUST

Centre rear shield fixing, bolt	M 6	0,5
Tank shield fixing, nut	M 5	0,4
Centre silencer and rear silencer fixing, bolt	M 8	2,8
Rear shield left and right side fixing, bolt with flange	M 8	0,5
Centre silencer shield and brake pipe retaining bracket fixing, nut with flange	M 6	0,6
Front pipe to cylinder head fixing, nut	M 8	2,6
Catalytic converter mounting bracket to bodyshell fixing, nut	M 6	0,6
Bracket for front pipe to oil sump fixing, bolt	M 10 × 1,25	5
Front pipe bracket collar fixing, nut with flange	M 8	2,2
Front pipe to catalytic converter fixing, bolt	M 8	2,8
Centre silencer shield fixing, bolt	M 6	0,5
Catalytic converter to centre silencer fixing, bolt	M 8	2,8
Centre shield fixing, nut with flange	M 8	2,2
Front shield for catalytic converter fixing, nut with flange	M 6	0,6
Exhaust pipe CO cap	M 14 × 1,5	4
Exhaust pipe bracket fixing, bolt (versions with automatic transmission)	M 8	2,5

POWER UNIT MOUNTING

Bracket, gearbox side, to gearbox cover fixing, nut	M 10 × 1,25	5
Flexible mounting to bracket fixing, nut	M 10 × 1,25	4,5

DESCRIPTION	Thread size	Tightening torques daNm
Front and rear mounting to engine mounting fixing, nut	M 10 × 1,25	4,5
Front and rear mounting to chassis fixing, bolt with flat, tapered washer	M 10 × 1,25	5,8
Gearbox side mounting to chassis fixing, bolt with flat, tapered washer	M 8	2,8
Intermediate shaft support fixing, nut	M 8	2,5
Connecting rod to bodyshell support fixing, nut	M 10 × 1,25	4,5
Connecting rod to engine mounting fixing, bolt	M 10 × 1,25	4,5
Connecting rod mounting to bodyshell fixing, bolt with flat, tapered washer	M 10 × 1,25	5,8
Track control arm rear bush to bodyshell fixing, bolt with flat, unlosable tapered washer	M 12 × 1,25	11
Front and rear frame to bodyshell fixing, bolt with unlosable, flat, tapered washer	M 12 × 1,25	11
Engine shield fixing, bolt	M 8	1,5
	M 6	0,55

PEDALS ASSEMBLY

Brake and clutch pedals to pedal mounting hinging, nut with polyammide ring	M 10 × 1,25	6
Accelerator control lever hinge fixing, bolt	M 6	0,5
Clutch oil reservoir bracket fixing, bolt	M 6	0,55
Pedals to bodyshell fixing, bolt	M 8	1,4
Hydraulic clutch pump to pedals mounting fixing, nut	M 8	1,6
Union for rigid pipe on hydraulic clutch pump	M 12 × 1	1,8
Union for clutch pipe intermediate connection	M 12 × 1	1,8
Clutch pipe connecting mounting bracket fixig, bolt	M6	0,6

Copyright by Fiat Auto

DESCRIPTION	Thread size	Tightening torques daNm
Union for clutch pipe on operating cylinder	M 12 × 1	1,8
Clutch operating cylinder bracket to gearbox fixing, bolt	M 8	1,4
Clutch fluid reservoir fixing, bolt	M 6	0,55
Accelerator cable adjustment nut	M 16 × 1	1,6

EXTERNAL GEARBOX CONTROLS

End of reaction rod mounting to bracket on gearbox fixing, nut	M 6	0,8
Gearbox reaction rod fixing, nut	M 8	1,5
Coupling to gearbox output rod fixing, bolt	M 8	2,5
Gear engagement rod selector fork to gear lever fixing, nut	M 6	0,5
Gear engagement control lever to mounting fixing, bolt	M 6	0,8
Flexible mounting fixing, bolt (1998 20v - 2446 20v - 2959 V6 - 2387 td)	M 6	0,8
Reaction rod to engine bracket fixing, bolt with two diameters (1998 20v - 2446 20v - 2959 V6 - 2387 td)	M 6	0,8
Sound insulation panel and seal fixing, nut with flange (1998 20v - 2446 20v - 2959 V6)	M 6	0,55
Gearbox control shaft to flexible mounting fixing, nut with flange for bolt (1998 20v - 2446 20v - 2959 V6 - 2387 td)	M 8	2,5
Gear control rod to flexible mounting fixing, nut with flange (1998 20v - 2446 20v - 2959 V6 - 2387 td)	M 8	2,5
Gear control rod to flexible mounting fixing, bolt with flange (1998 20v -2446 20v - 2959 V6 - 2387 td)	M 8	2,5
Reaction rod bracket to engine fixing, bolt (1998 20v - 2446 20v - 2959 V6 - 2387 td)	M 8	1,8
Nut for automatic transmission	M 8	2,5
Union for automatic transmission flexible pipe	M8	1,5

DESCRIPTION	Thread size	Tightening torques daNm

GEARBOX AND DIFFERENTIAL

Left side cover fixing, bolt	M 8	2,5
Right side cover to casing fixing, bolt	M 8	2,5
Gearbox casing to support fixing, bolt	M 10 × 1,25	2,5
	M 8	
Rear cover to gearbox casing fixing, bolt	M 8	2,5
Gearbox oil threaded drain plug	M 18 × 1,5 (tapered)	2,5
Gearbox casing threaded oil filler plug	M 16 × 1,5 (tapered)	2,2
Differential cover to bell housing fixing, bolt	M 8	2,5
	M 10 × 1,25	5
Gear control rod spring retaining, bolt	M 8	2,5
Magnetic plug	M 22 × 1,5	4,6
Main shaft gear lock, nut	M 22 × 1,5	17
Lay shaft gear locking, ring nut	M 22 × 1,5	17
Main rear bearing retaining plate fixing, bolt	M 8	2,5
Lay shaft rear bearing retaining plate fixing, bolt	M 8	2,5
1st and 2nd speed selector fork fixing, bolt	M 8	2,5
3rd and 4th speed selector fixing, bolt	M 8	2,5
3rd and 4th speed selector fork fixing, bolt	M 8	2,5
5th speed and reverse selector fixing, bolt	M 8	2,5
Complete reverse gear lelver fixing bolt	M 8	2,5
5th speed selector fork fixing, bolt	M 8	2,5

Copyright by Fiat Auto

DESCRIPTION	Thread size	Tightening torque daNm
Gear control lever to internal shaft fixing, nut	M 8	2,5
Gear control lever to external shaft fixing, bolt	M 8	2,5
Crown wheel fixing, bolt	M 10 × 1,25	9
Differential side constant velocity joint to flange fixing, bolt	M 8	3,7
Impulse generator fixing, ring nut	M 18 × 1,5	5
Gearbox to engine fixing, bolt with flange (2959 V6 with automatic transmission)	M 10 × 1,25	3,5
Lower gearbox to engine fixing, nut with flange (2959 V6 with automatic transmission)	M 10 × 1,25	3,5
Upper gearbox to engine fixing, bolt with normal flange (2959 V6 with automatic transmission)	M 12 × 1,25	8
Lower gearbox to engine fixing, nut with flange (2959 V6 with automatic transmission)	M 12 × 1,25	5,5
Gearbox casing to engine fixing, bolt (2959 V6 with automatic transmission)	M 10	4,3
Gearbox casing to engine fixing, bolt (2959 V6 with automatic transmission)	M 10	4,3
Flywheel to torque converter fixing, bolt (2959 V6 with automatic transmission)	M 8	3,8
Flywheel to torque converter fixing, bolt (2959 V6 with automatic transmission)	M 10 × 1,25	5
Starter motor fixing, bolt (2959 V6 with automatic transmission)	M 8	1,8
Starter motor to bell housing fixing, bolt (2959 V6 with automatic transmission)	M 8	2,1
Dust shield to bell housing fixing, bolt (2959 V6 with automatic transmission)	M 6	0,57

BRAKING SYSTEM

Front brake disc fixing, bolt with centering pin	M 10 × 1,25	2
Rear brake disc fixing, bolt with centering pin	M 8	1,2

DESCRIPTION	Thread size	Tightening torques daNm
Front brake caliper to steering knuckle fixing, bolt with flange	M 14 × 1,5	16
Rear brake caliper to stub axle fixing, bolt	M 10 × 1,25	5,5
Union for rigid pipe on brake servo pump	M 10 × 1	1,2
Union for connecting rigid pipe to front and rear flexible pipes	M 10 × 1	1,8
Union for connecting ridig pipes to load proportioning valve (for load proportioning valve with cast iron casing)	M 10 × 1 M 12 × 1	1,8
Union for connecting flexible pipes to brake calipers	M 10 × 1	2,1
Load proportioning valve to rear cross member fixing, bolt	M 6	0,8
Load proportioning valve control lever fixing, nut	M 6	1,2
Bleed screw on front and rear brake calipers	M 7	0,45
Handbrake lever to bodyshell fixing, bolt	M 8	2,4
Rpm sensor for anti-lock brakes fixing, bolt	M 6	1
Electro-hydraulic control unit for anti-lock brakes to bracket fixing, nut with polyammide ring	M 6	0,6
Union for rigid pipe on electro-hydraulic control unit for anti-lock brakes	M 10 M 12	1,2
Brake pipes fixing, nut with flange	M 6	0,55
Brake servo to pedals fixing, nut with polyammide ring	M 8	1,4
Right and left shield for brake calipers fixing, bolt with unlosable washer	M 6	0.5
Handbrake cable retaining bracket to bodyshell fixing, nut	M 6	0,55
Handbrake cable to bodyshell fixing, nut	M 6	0,55
Handbrake shoe carrier fixing, bolt	M 10	5,5

Copyright by Fiat Auto

DESCRIPTION	Thread size	Tightening torques daNm
Handbrake support fixing, bolt	M 8	2,4

STEERING

Steering wheel support fixing, nut	M 8	2,8
Lower steering shaft universal joint fork to steering casing pinion fixing, bolt	M 8	3
Steering wheel to steering column fixing, nut	M 16 × 1,5	5
Steering wheel height adjustment device, nut	M 8	1
AIR BAG to steering wheel fixing, bolt	M 6	0,64
Lower shaft shield to bodyshell fixing, double bolt	M 6	0,54
Sound inslation for AIR BAG fixing, nut with flexible, tapered washer	M 6	0,54
Bearing fixing flange to steering column support fixing, bolt	M 6	0,54
Passenger AIR BAG to dashboard fixing, botl with tapered washer	M 6	0,7

POWER ASSISTED STEERING

Power assisted steering box to frame fixing, bolt	M 12 × 1,25	12
Power assisted steering box to frame fixing, bolt (2446 20v - 2959 V6)	M 12 × 1,25	11
Power assisted steering box rod to damper fixing, nut	M 10 × 1,25	3,8
Joint to power assisted steering box rod fixing, nut	M 14 × 1,5	5
Power assisted steering fluid reservoir bracket to bodyshell fixing, nut	M 6	0,5
Power assisted steering box to rigid supply pipe fixing, nut	M 8	1,5
High pressure pipe closure fixing, bolt for bracket	M 6	0,5

DESCRIPTION	Thread size	Tightening torques daNm
Union for fixing high pressure pipe to power assisted steering box	M 16 × 1,5	3,6
Filler for fixing adjustable union on power assisted steering pump (2446 20v -2959 V6)	M 18 × 1,5	3,4
Filler for fixing high pressure pipe to pump (2446 20v - 2959 V6)	M 16 × 1,5	4
Screens to power assisted steering box fixing, bolt (2446 20v - 2959 V6)	M 8	1,5
Power assisted steering oil recovery pipe mounting bracket fixing, nut with border (2446 20v - 2959 V6)	M 6	0,5
High pressure pipe mounting bracket fixing, bolt (versions with Servotronic)	M 6	0,5
Filler for fixing power assisted steering fluid adjustable union (versions with Servotronic)	M 16 × 1,5	3,4

FRONT SUSPENSION

Front wheel hubs to steering knuckle fixing, nut	M 24 × 1,5	6 + 52°
Frotn wheel to hub fixing, nuts/bolts	M 12 × 1,25	9,8
Differential side joint to flange fixing, bolt (1998 20v)	M 8	4,2
Differential side joint to flange fixing, bolt (2446 20v - 1995 16v - 2959 V6 - 2387 td)	M 10 × 1,25	5,5
Rear flexible bush to track control arm fixing, nut	M 10 × 1,25	5
Track control arm rear flexible bush to frame fixing, bolt	M 6	0,6
Shock absorber to steering knuckle fixing, bolt	M 12 × 1,25	10
Shock absorber to flexible mounting fixing, nut	M 14 × 1,5	7
Ball joint to steering knuckle fixing, flanged nut	M 12 × 1,25	5,5
Track control arm front bush to frame fixing, bolt with flat, tapered washer	M 10 × 1,25	4,5
Shock absorber mounting to bodyshell fixing, bolt with unlosable, flat, tapered washer	M 8	2,8

Copyright by Fiat Auto

DESCRIPTION	Thread size	Tightening torques daNm
Stabilizer bar U bolt to frame fixing, bolt with unlosable, flat, tapered washer	M 8	2,8
Stabilizer bar connecting rod to track control arm fixing, nut	M 10 × 1,25	4,5

REAR SUSPENSION

Rear wheel hubs to stub axle fixing, nut	M 24 × 1,5	32
Rear wheel to hub fixing, nuts/bolts	M 12 × 1,25	9,8
Shock absorber to stub axle fixing, nut	M 12 × 1,25	9
Shock absorber to flexible mounting fixing, nut	M 14 × 1,5	7
Shock absorber mounting to bodyshell fixing, nut	M 8	2,5
Longitudinal rod for stabilizer bar to stub axle fixing, bolt	M 12 × 1,25	10
Longitudinal rod support to bodyshell fixing, bolt with unlosable, flat, tapered washer	M 10 × 1,25	6
Longitudinal rod to mounting fixing, nut	M 10 × 1,25	6
Longitudinal rod to stabilizer bar fixing, bolt	M 10 × 1,25	6
Cross member to bodyshell fixing, bolt with unlosable, flat, tapered washer	M 10 × 1,25	6
Transverse rods to cross member and shock absorber fixing, nut	M 12 × 1,25	9
Rear transverse rods adjustment sleeve locking, bolt	M 8	1,5

FUEL AND INLET SYSTEM

Plastic tank fixing, bolt	M 8	1,2
Filler fixing, bolt	M 6	0,6
Flow meter fixing, bolt	M 6	0,5

DESCRIPTION	Thread size	Tightening torques daNm
Vacuum system bolt with tapered washer	M 8	2,2
Union for fixing pipes to fuel filter	M 14 × 1,5	3,5

BODYWORK

Pin for attachment on bonnet lid	M 8	1,7
Bonnet lid hinges to bodyshell fixing, bolt	M 8	2,7
Windscreen wiper arm fixing, nut	M 10 × 1,25	2,5
Rear flap lock fixing, bolt	M 6	0,9
Lock striker fixing, bolt	M 8	2,5
Front pillar frame fixing, nut with flange	M 8	1,6
Upper cross member to front headlamp holder fixing, bolt with flat washer	M 8	2,5
Tow hook mounting fixing, bolt with flange	M 8	2,4
Front wheel arch linder fixing, nut with flange	M 8	1,6
Rear wing frame fixing, bolt	M 8	1,8
Rear wing frame fixing, nut with flange	M 8	1,6
Centre pillar fixing, bolt	M 8	2,4
Door hinge fixing, nut	M 8	2
Dashboard and console fixing, nut with border	M 8	2
Windscreen wiper fixing, bolt with flange	M 8	2
Windscreen wiper fixing, nut with flange	M 8	2

Copyright by Fiat Auto

DESCRIPTION	Thread size	Tightening torques daNm
Front seat belt idler ring to adjuster on door pillar fixing, bolt	7/16"	5
Front seat belt reel to pillar and side member fixing, bolt	7/16"	5
Seat belt webbing stalk to front seat, inner side fixing, bolt	7/16"	5
Front seat belt adjuster to door pillar fixing, bolt	M 8	2,4
Rear centre seat belt webbing stalk to floor fixing, bolt	7/16"	5
Rear side seat belt to floor fixing, bolt	7/16"	5
Front seat belt reel to upper partition fixing, bolt	7/16"	5
Rear seat lower backrest fixing, flanged bolt	M 8	2,6
Seat backrest bracket fixing, bolt with flange	M 6	0,8
Door lock fixing, bolt	M 8	1,4

Lubrication service
The engine oil should be changed for petrol engines every 15,000 km or, irrespective of the mileage, every 12 months and for Diesel engines this figure is every 7,500 km.
The oil filter should be replaced at the same time as the engine oil is changed.

For the correct and optimum operation of the engine, it is always advisable to use the type of oil recommended in the table on page 8.



If the vehicle is constantly subjected to heavy usage conditions (mainly town driving, journies in dusty areas, constant mountain driving, towing a trailer or caravan, particulary harsh climatic conditions, constant motorway driving at high speeds etc.) then the "Lubrication Service" should be carried out at more frequent intervals. In the above mentioned conditions it is advisable to carry out the "Planned maintenance" and the "Intermediate checks" at more frequent intervals.

PLANNED MAINTENANCE OPERATIONS	INTERVALS IN THOUSANDS OF KM					
	15	30	45	60	75	90
Check condition and wear of tyres	☆	☆	☆	☆	☆	☆
Check condition and wear of front brake pads	☆	☆	☆	☆	☆	☆
Check condition and wear of rear brake pads		☆		☆		☆
Visual inspection of condition of exterior bodywork and underbody protection	☆	☆	☆	☆	☆	☆
Check condition of pipes (exhaust, fuel supply, braking system)	☆	☆	☆	☆	☆	☆
Check condition of rubber elements, boots, hoses, etc.	☆	☆	☆	☆	☆	☆
Check condition of various drive belts (■)		☆		☆		☆
Check adjustment of tappet clearance (only for 1995 16v and 2387 turbo ds engines)		☆		☆		☆
Check exhaust gas emissions (petrol engines, using CO tester)	☆	☆	☆	☆	☆	☆
Check crankcase ventilation system						☆
Replace fuel filter (petrol engines)				☆		
Replace fuel filter (2387 turbo ds engine only)		☆		☆		☆
Replace air filter cartridge (petrol engines)		☆		☆		☆
Top up fluid levels (engine coolant, brake fluid, windscreen washer, power steering, hydraulically operated clutch)	☆	☆	☆	☆	☆	☆
Check gearbox/differential oil level			☆			☆

(■) Tensioning and, if necessary, adjustment for 1995 16v engine only

Copyright by Fiat Auto

PLANNED MAINTENANCE OPERATIONS	INTERVALS IN THOUSANDS OF KM					
	15	30	45	60	75	90
Check operation of Lambda sensor			☆			☆
Replace pollen filter	☆	☆	☆	☆	☆	☆
Replace engine coolant (or every 2 years)				☆		
Check condition of timing belt (1995 16v engine only)				☆		
Check condition and position of automatic transmission cables		☆		☆		☆
Test electronic control unit on electronically controlled automatic gearbox		☆		☆		☆
Change automatic gearbox oil and (filter)			☆			☆
Replace spark plugs, check high tension leads (excluding 2959 6v 24v engine)			☆			☆
Replace spark plugs, check high tension leads (2959 6v 24v engine only)						☆
Check ignition/injection system (petrol engines)		☆		☆		☆
Change engine oil and oil filter	☆	☆	☆	☆	☆	☆

Additional operations

When the operations in the "Planned Maintenance Programme" are completed the following checks must also be carried out:

Every 500 km or before long journies check	- engine oil level - coolant level - brake/hyraulic clutch fluid level - tyre inflation pressure
Every 5,000 km replace (Diesel engines only)	- bleed condensation water from fuel filter
Every 60,000 km or 2 years replace	- engine coolant
Every 105,000 km replace	- timing belt - counter-balance shaft timing belt (1995 16v only)
Every 120,000 km replace	- manual gearbox oil
Replace every 2 years	- brake/clutch fluid

Index

00.

page

INTRODUCTION

- Identification data 1
- Weights 1
- Performance 2
- Fuel consumption 2

TECHNICAL DATA

- Automatic gearbox - Differential 3

Copyright by Fiat Auto

COPYRIGHT FIAT AUTO

The reproduction, even partial, of the text and illustrations is prohibited.

The information contained in this publication is purely indicative and could be out of date following modifications made by the Manufacturer, at any time, for technical or commercial reasons or in order to conform to legal requirements in the various countries.

Fiat Auto S.p.A.
D.M.C. - M.P.S.
Servizi Post Vendita - Assistenza Tecnica
10040 Volvera - TO - (Italia) - Largo Senatore G.Agnelli, 5
Publication no. 506.475/08 - Maggio 1996 - 440
Printed in Italy - Tip. Europrint - TORINO
order no. 60489725

IDENTIFICATION DATA		ENGINE	VERSION	GEARBOX
				automatic
1998 20v	ZLA 838.000	838 A1.000 838 A6.000 (▲)	838 AA 11 A 838 AG 11A 01(▲)	●

(▲) 96 range versions

ENGINE TYPE	1998 20v
GEARBOX	

WEIGHTS (in kg)

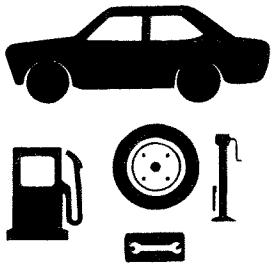		1470/ 1520 (*)
	+ 500 = 	1970/ 2020 (*)
Maximum permissible loads on the axles ■		1180
		1180
Maximum permissible load on the roof		100
Load on the tow hook (trailer with braking system)		90
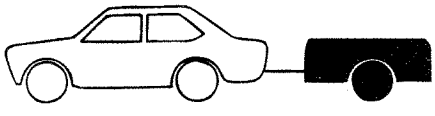	Trailer without braking system	500
	Trailer with braking system	1500

■ Loads which must never be exceeded

NOTE FOR VERSIONS WITH ACCESSORIES: in the presence of special equipment (non standard air conditioner, sun roof, trailer towing device), the empty weight increases and therefore the carrying capacity may decrease, in relation to the maximum permissible loads.
(*) The first figure refers to the vehicle without optional equipment; the second figure with the entire range of optional equipment.

Copyright by Fiat Auto

ENGINE TYPE	1998 20v
GEARBOX	

(▲) 96 range version

Speed kph (average load) 	1	-
	2	-
	3	-
	4	max 197 210 (▲)
	5	-
	R	-
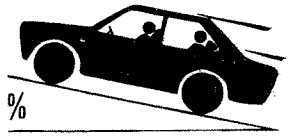 Maximum climable gradient fully laden		37
 Fuel consumption 93/116/CE directive (litres/100 km)	**Urban**	14,9
	Extra-urban	8,8
	Combined	11,0
CO_2 exhaust emissions (g/km)		263

The fuel consumption figures according to directive 93/116/CE have been defined in the course of homologation tests involving:
- an urban cycle which includes a cold start followed by a varied urban cycle simulation.
- an extra-urban cycle which includes frequent acceleration in all gears simulating normal out of town usage. The speed varies between 0 and 120 kph.
- The average combined consumption includes 37% of the urban cycle and 63% of the extra-urban cycle.

The type of journey, traffic conditions, driving styles, atmospheric conditions, trim level/equipment/accessories, whether a roof rack is fitted, the presence of special equipment and the general state of the vehicle can lead to fuel consumption figures which differ from those obtained through the above mentioned procedures.
The CO_2 exhaust emissions (in g/km) are measured during the average combined cycle.

AISIN AUTOMATIC GEARBOX

	ENGINE	1998 20v
Gears		1 2 3 4 R
Gear ratios	1	3,606:1
	2	2,060:1
	3	1,366:1
	4	0,982:1
	R	3,949:1
Idler ratio		55/56 (0,982)
Torque converter	Ø mm	241
Ratio (multiplication) of engine torque		1,99
Quantity of oil GI/2●	1st filling	7,5 l (6,8 Kg)
	periodic replacement	3 l (2,7 Kg)

(●) "DEXRONG II " type oil for automatic transmissions

DIFFERENTIAL

Crown wheel and pinion reduction		2,652:1*	2,654:1**
Ratio at the wheels	1	9,563:1	9,570:1
	2	5,463:1	5,467:1
	3	3,623:1	3,625:1
	4	2,604:1	2,606:1
	R	10,473:1	10,481:1

(*) For vehicles produced up to March 1995
(**) For vehicles produced after March 1995

Copyright by Fiat Auto

page

ENGINE

- Removing-refitting power unit 1
- Removing-refitting power unit without the aid of trolley 1860823000 9

REPLACING AUXILIARY BELT

- Removing-refitting auxiliary component belt 11

REPLACING TIMING BELT

- Removing-refitting timing belt 14

Copyright Fiat Auto

COPYRIGHT Fiat Auto S.p.A.

Reproduction of all or part of the text and illustrations is prohibited.

The information in this publication is intended as a guide and could be superseded by modifications introduced by the Manufacturer at any time for technical and commercial reasons or in accordance with local regulations.

Fiat Auto S.p.A.
Direzione Marketing Commerciale
Direzione Post-Vendita - Servizi - Assistenziali
10134 TURIN (Italy) - Corso E. Giambone, 33
Print no. 506.475 - Ottobre 1994 - 500
Printed in Italy - Tip. Europrint - Torino

REMOVING-REFITTING POWER UNIT

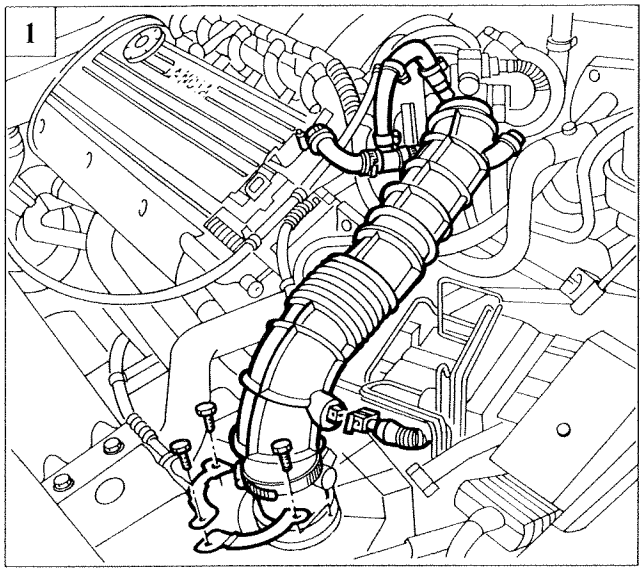

P3U01CJ01

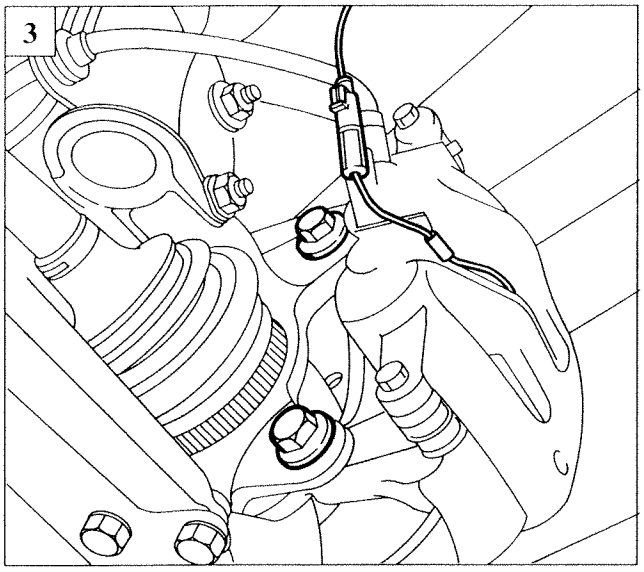

P3U01CJ03

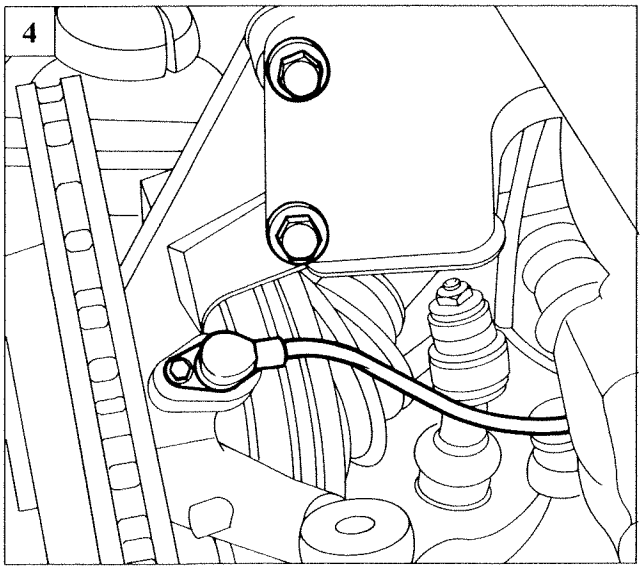

P3U01CJ04

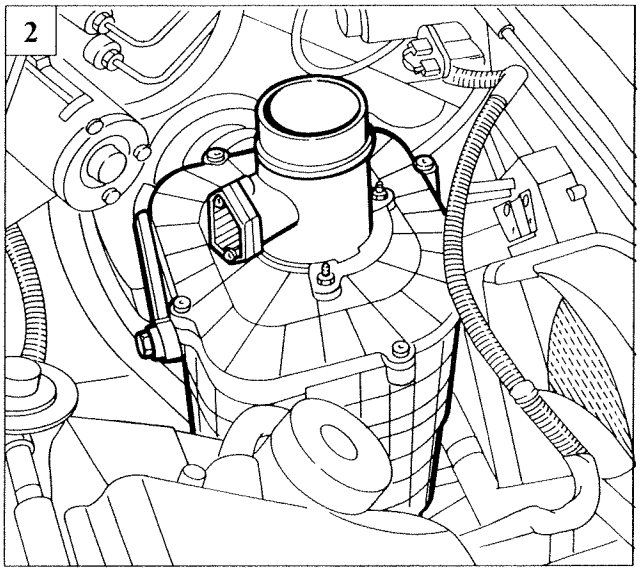

P3U01CJ02

NOTE *This section describes procedure for 2446 20v engine; the 1998 20v engine differs solely in lacking a modular intake manifold.*

Working from inside the vehicle, remove the steering box pinion from the steering column as described in "Section 41" of this manual; then position the vehicle on a lift, disconnect the battery negative lead and proceed as follows.

Drain the power steering fluid

1. Disconnect electrical connections from debimeter and intake air temperature sensor, loosen clips indicated on rear part from air intake duct leading from filter to butterfly valve case and fastenings from duct to air cleaner, and remove duct.

2. Disconnect air cleaner assembly.
3. Remove right front wheel, disconnect brake lining wear sensor connection, then disconnect brake pipe. Secure caliper assembly in wheel arch compartment.

Repeat the latter operation for the left hand wheel.

4. Remove bolts retaining damper (right and left hand) to pillar and disconnect rpm sensor from pillar.

Copyright Fiat Auto

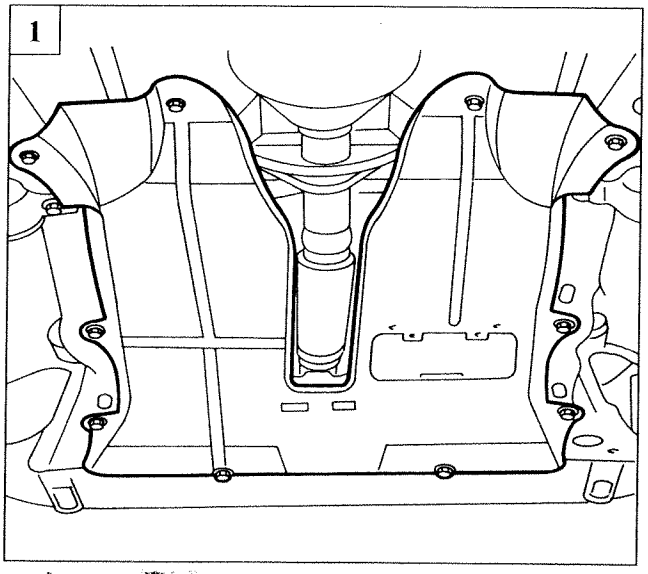

P3U02CJ01

1. Disconnect engine bay lower protection.

2. Disconnect first section of exhaust duct by undoing components shown in figure.

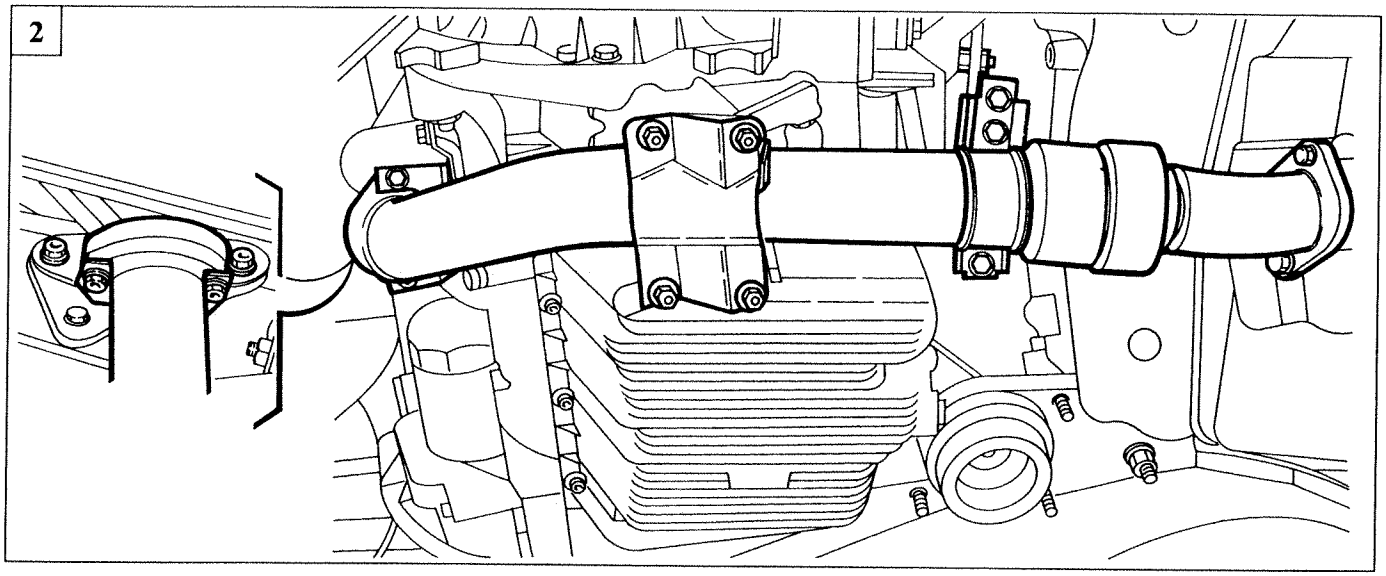

P3U02CJ02

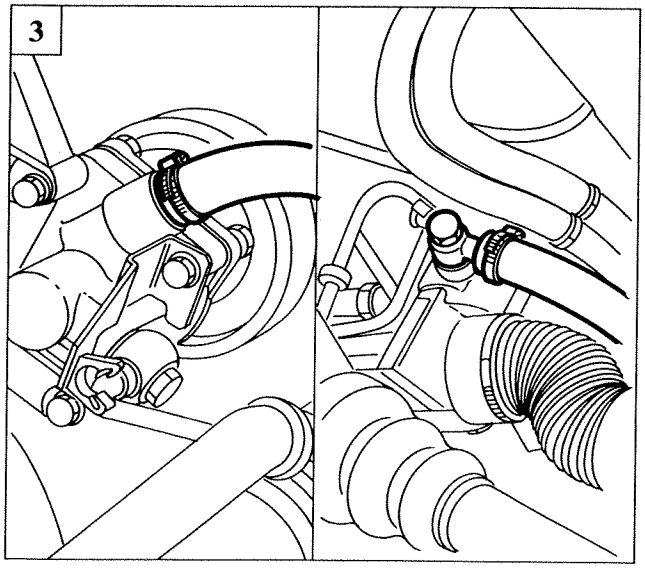

P3U09AJ02

3. Disconnect fluid return line to reservoir from steering box and fluid outlet line from reservoir from power steering pump.

1

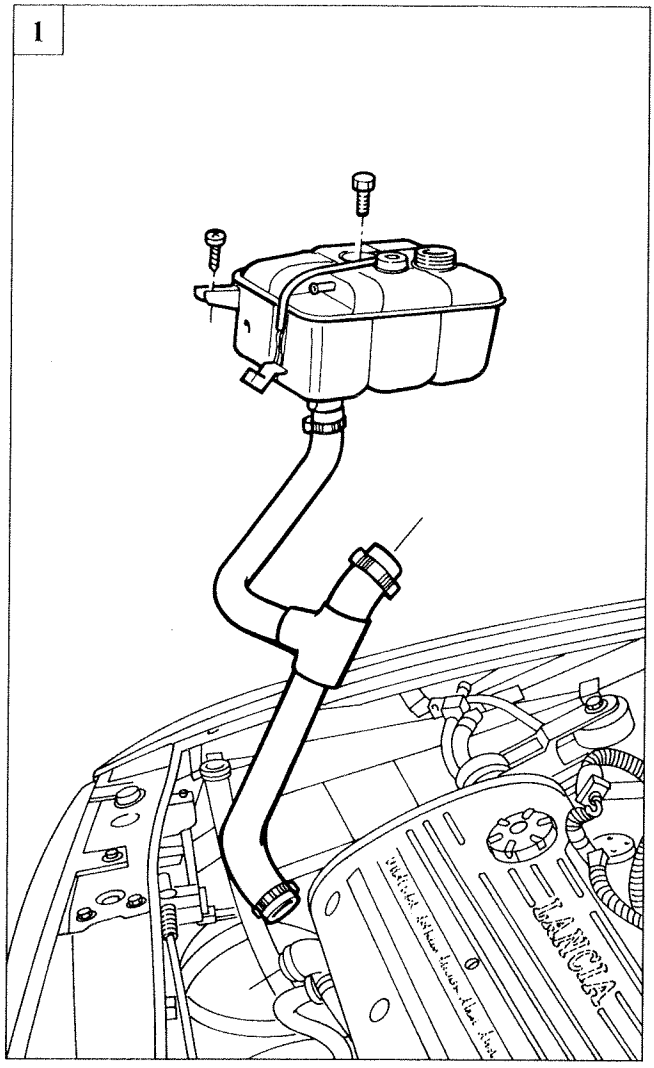

P3U03CJ01

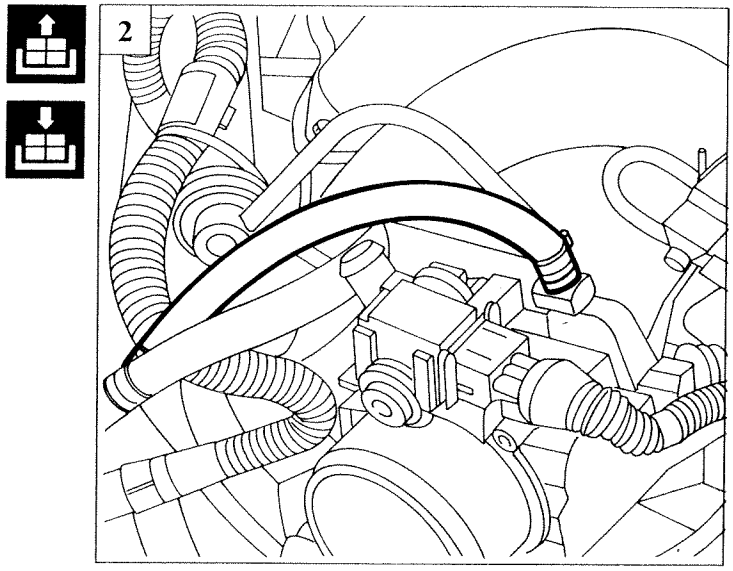

P3U03CJ02

Drain coolant.

1. Disconnect coolant sleeve from timing end of engine to radiator by looosening clips at ends. Disconnect expansion tank electrical connection, screw retaining washer fluid filler fitting and central reservoir retaining screw. Remove assembly from vehicle.

2. Disconnect coolant line from butterfly valve case.

3. Disconnect coolant sleeve by loosening clips at the end.

4. Disconnect coolant inlet and outlet lines to passenger compartment heater radiator from engine.

3

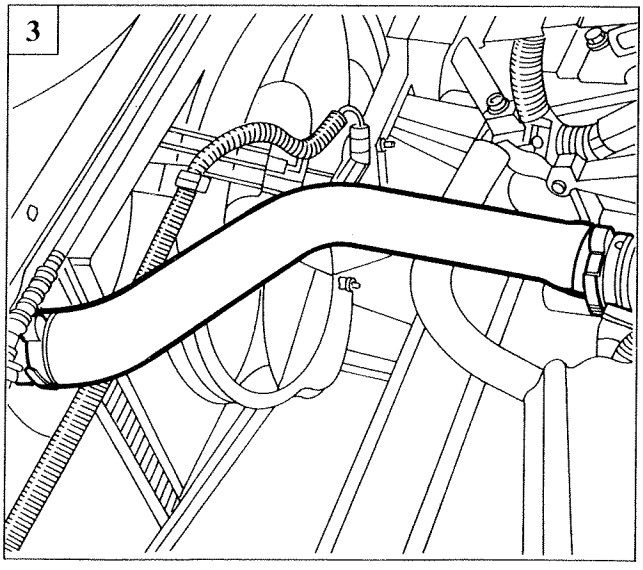

P3U03CJ03

4

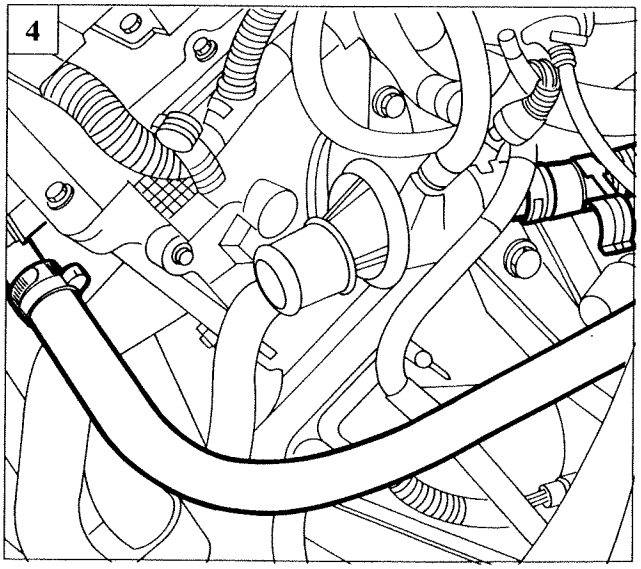

P3U03CJ04

Copyright Fiat Auto

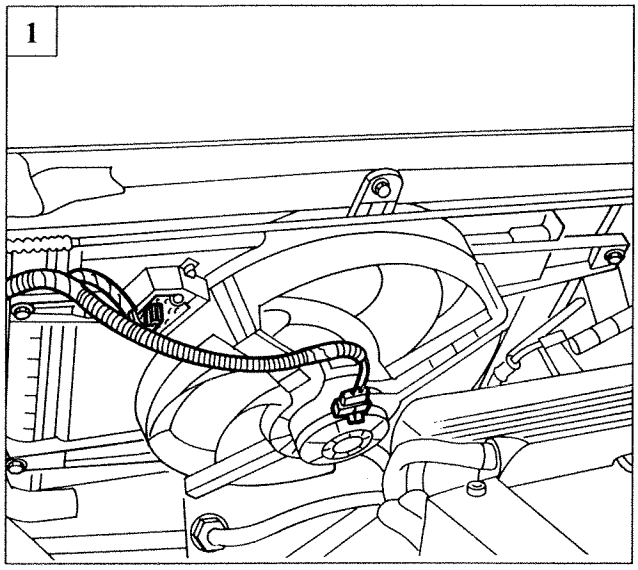

P3U04CJ01

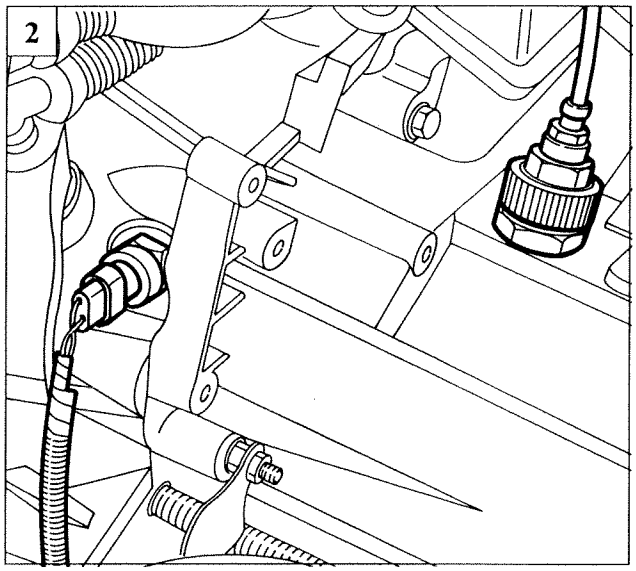

P3U04CJ02

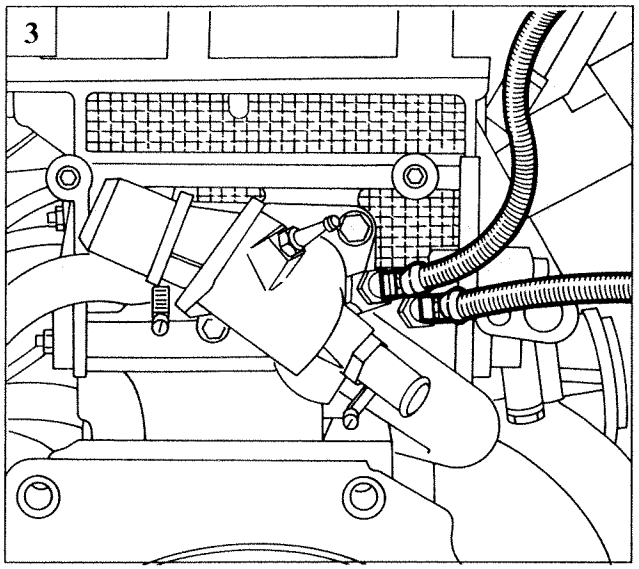

P3U04CJ03

1. Disconnect fan electrical connections and secure radiator assembly to upper beam.
2. Disconnect reversing light switch electrical connection and reverse engagement inhibition cable.
3. Disconnect electrical connections from thermostat.
4. Disconnect electrical connections from fuel injectors, timing sensor and timing variator solenoid. Then place wiring to one side.
5. Remove spark plug cover, disconnect electrical leads from ignition coils and earth point, then place wiring to one side.

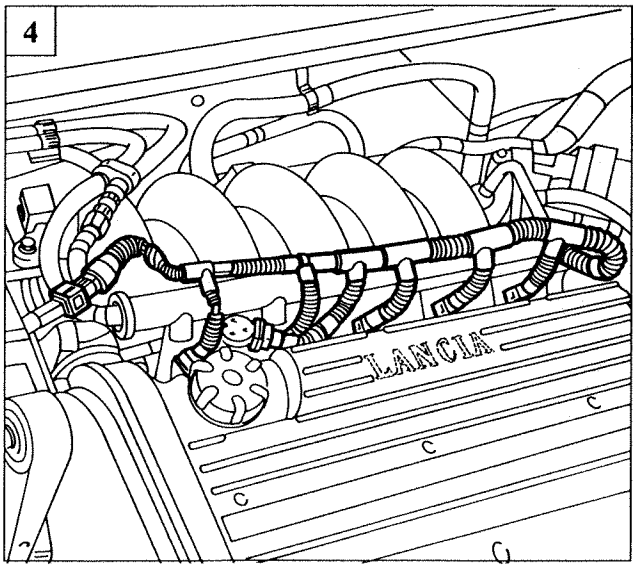

P3U04CJ04

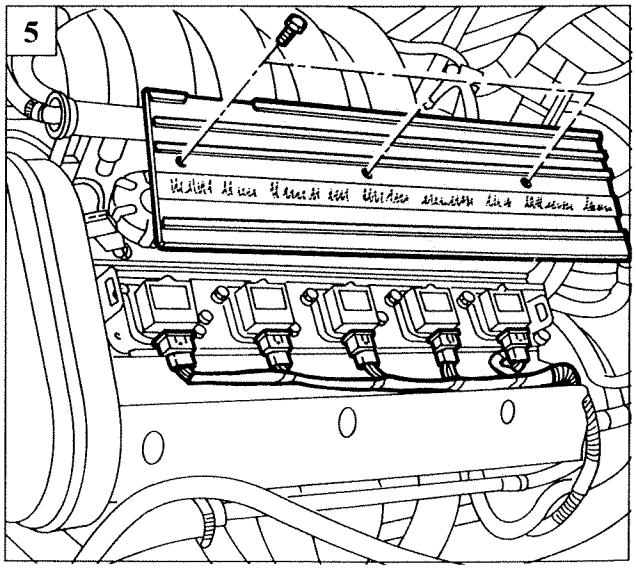

P3U04CJ05

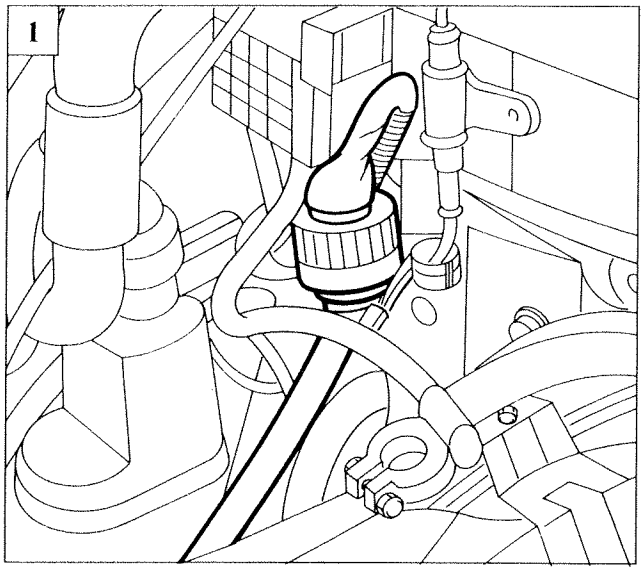

P3U05CJ01

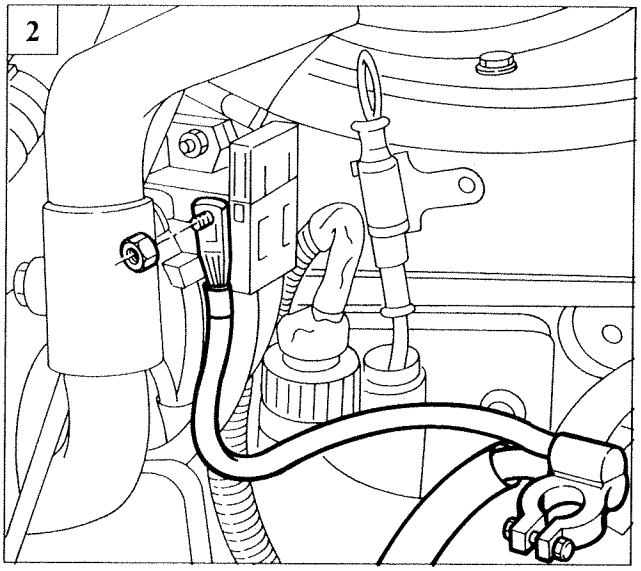

P3U05CJ02

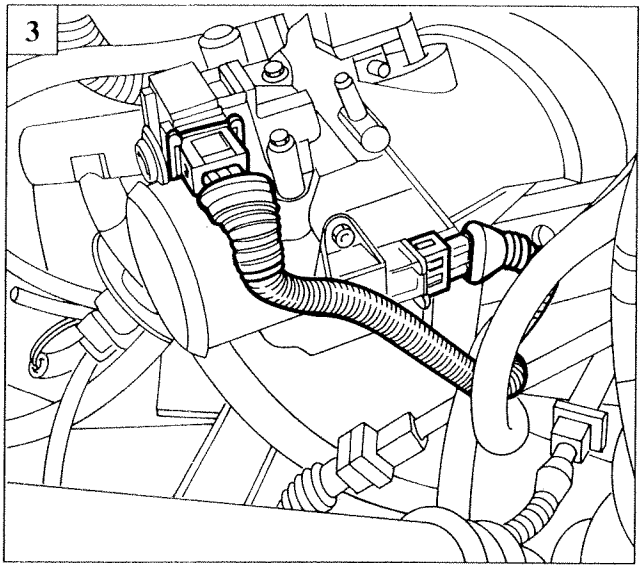

P3U05CJ03

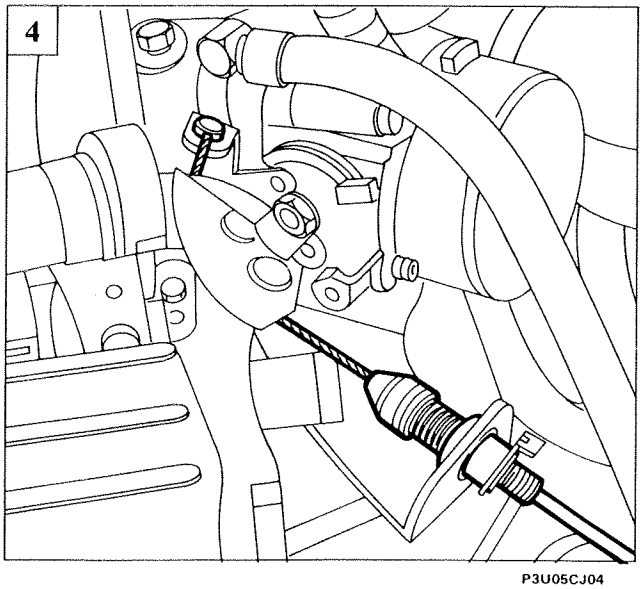

P3U05CJ04

1. Disconnect electrical connection between engine wiring and vehicle wiring.
2. Disconnect battery positive lead (and starter motor) from connector block.
3. Disconnect connections indicated from butterfly valve case and earth on intake manifold.
4. Disconnect throttle cable from butterfly valve case.

Copyright Fiat Auto

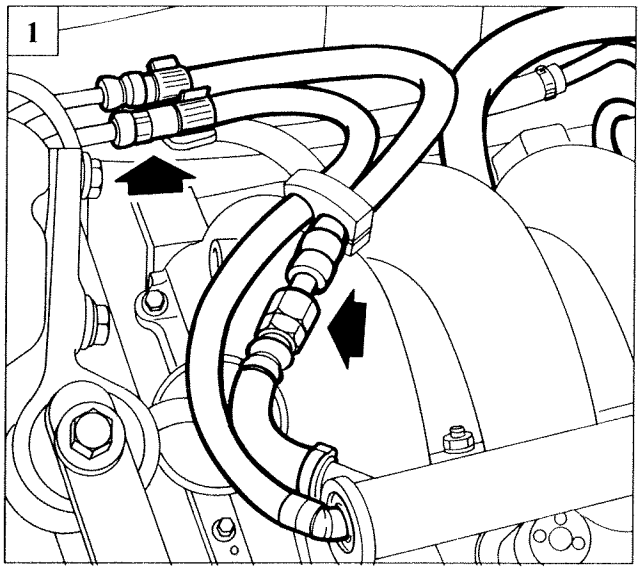

P3U06CJ01

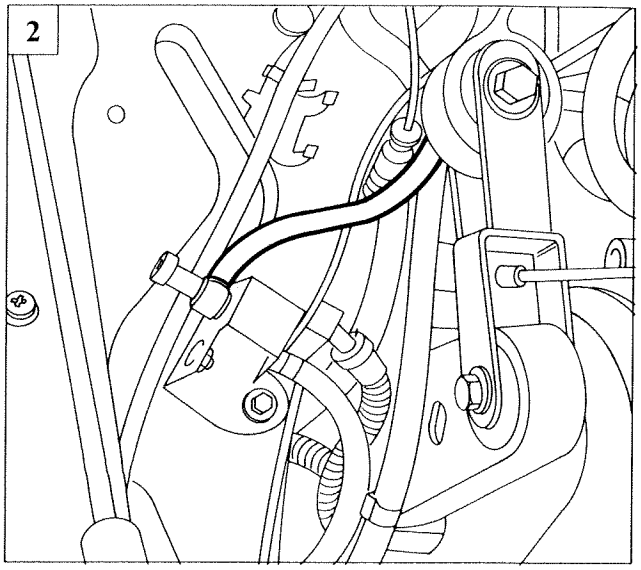

P3U06CJ02

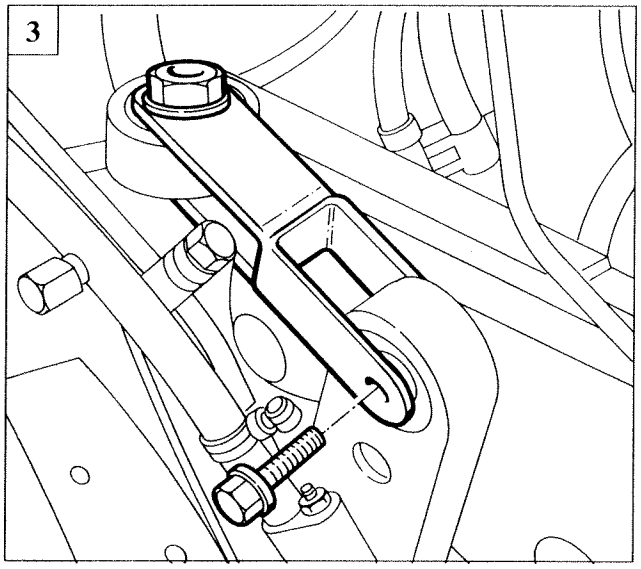

P3U06CJ03

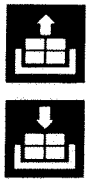

1. Disconnect fuel delivery and return lines and pipes fitted to intake manifold from points indicated (to prevent damage to plastic fuel manifold).

2. Disconnect pipe connecting V.I.S. operating device from solenoid.

3. Release reaction rod by removing bolt indicated.

4. Disconnect bracket retaining reaction rod by removing screws securing it to body.

5. Disconnect earth lead from gearbox mount.

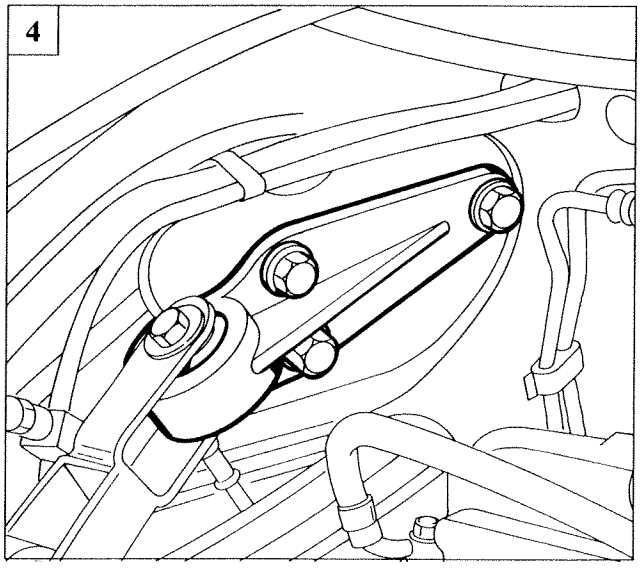

P3U06CJ04

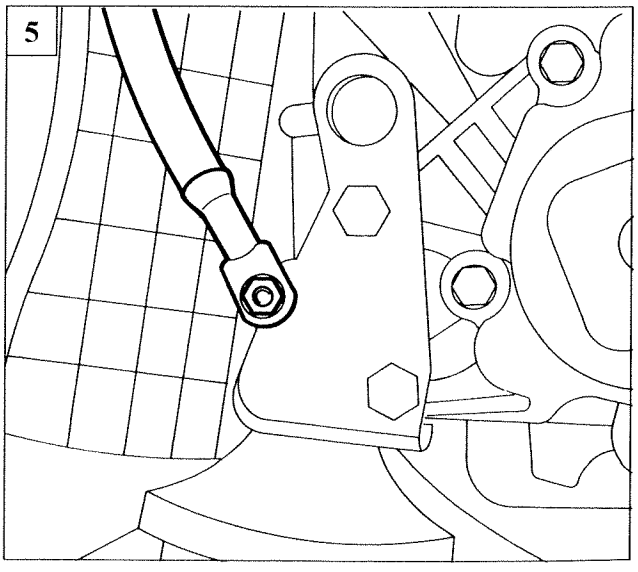

P3U06CJ05

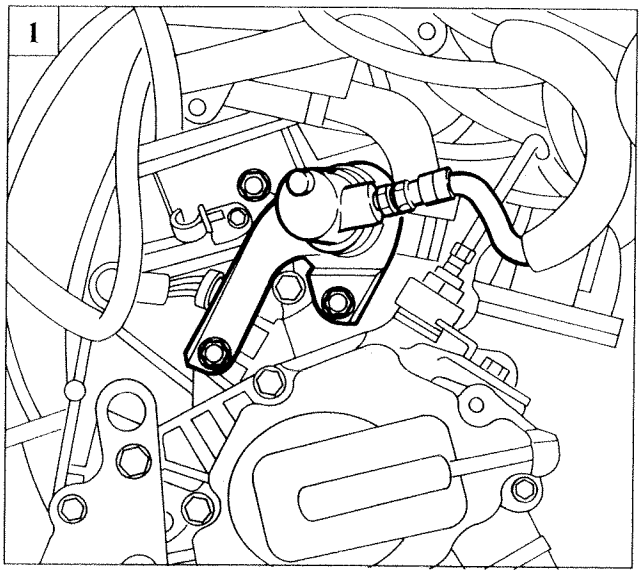

P3U07CJ01

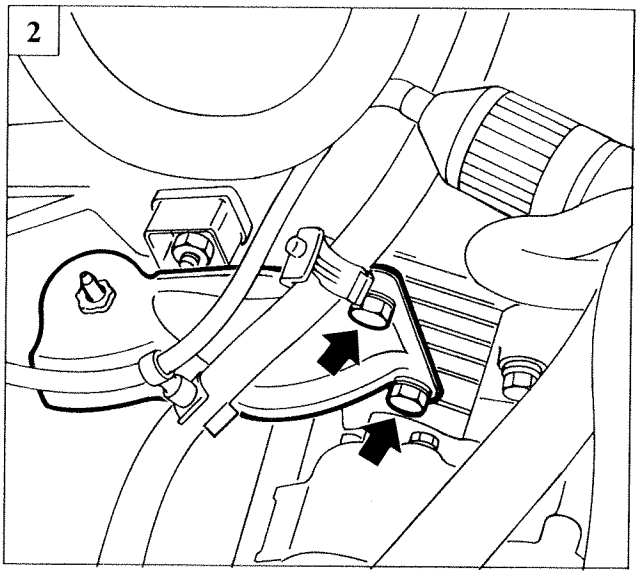

P3U07CJ02

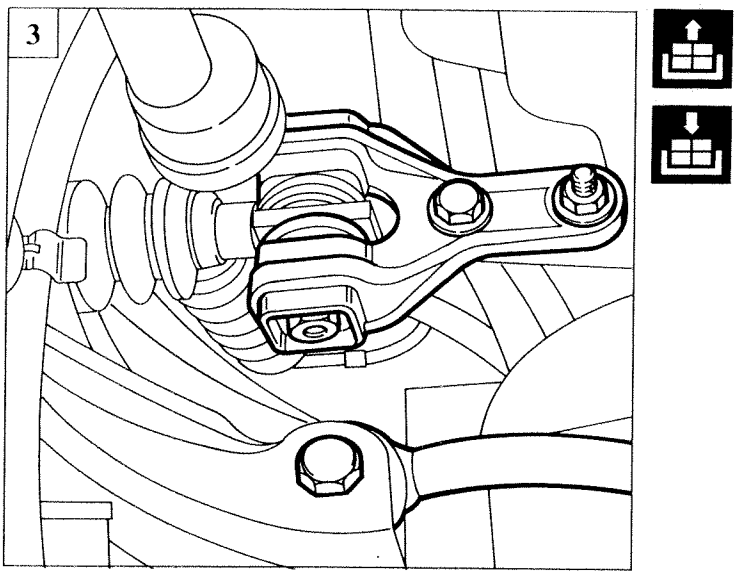

P3U07CJ03

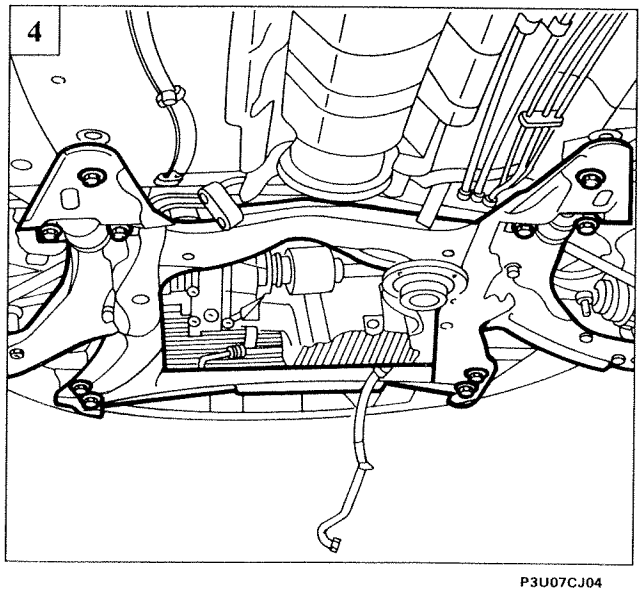

P3U07CJ04

1. Disconnect clutch operating cylinder with mount bracket.
2. Disconnect gearbox control levers and remove reaction bracket from gearbox.
3. Disconnect gear engagement fork lever.
4. Loosen bolts retaining chassis to body.

Copyright Fiat Auto

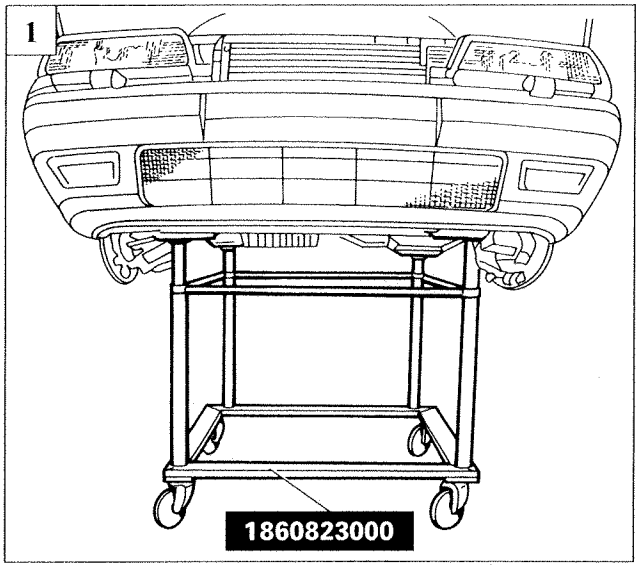

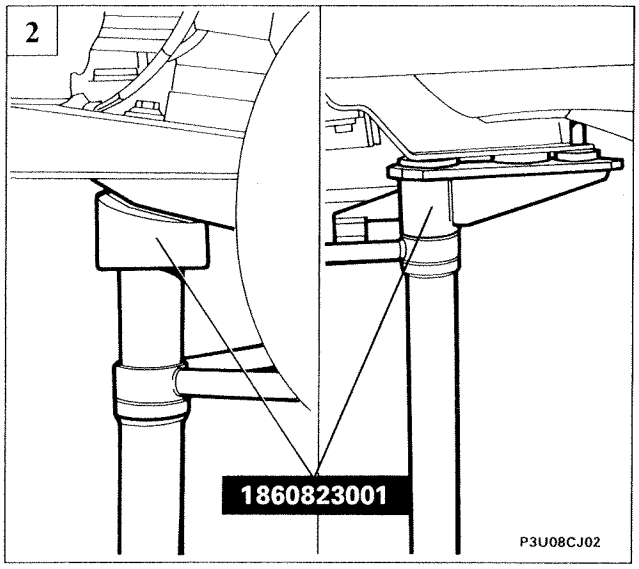

Front adaptor **Rear adaptor**

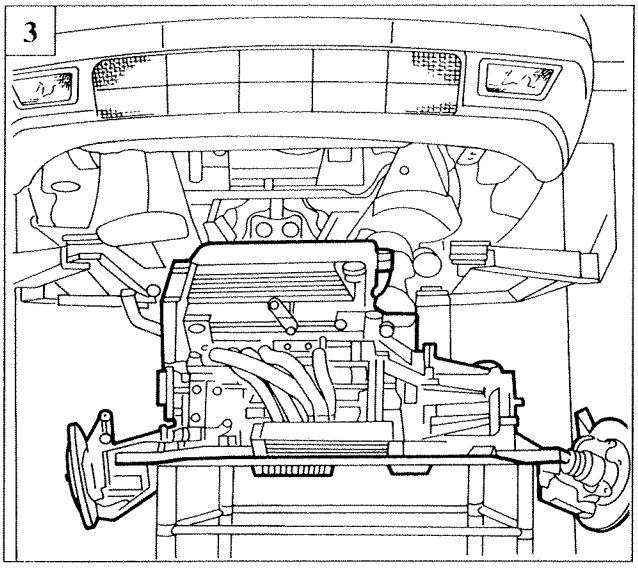

1-2. Remove rubber blocks on body at stand retaining points. Position power unit stand 1860823000 beneath vehicle and lower lift to rest chassis on front adaptors. Centre and retain to rear adaptors (1860823001).

3. Unscrew chassis retaining bolts loosened previously, then raise vehicle.

NOTE *When refitting, reverse removal instructions. Note particularly when refitting coolant hoses, the groove in the hose must be aligned with the ridge on the rigid pipe to which it is fitted. Once refitting is complete, check frame bolts are tightened correctly and adjust toe-in. Top up levels of coolant and power steering fluid and also bleed the power steering system.*

REMOVING-REFITTING POWER UNIT WITHOUT THE AID OF TROLLEY 1860823000

Arrange vehicle on lift, then disconnect battery negative lead and proceed as follows:

- Use tool 1878077000 to undo studs securing bonnet lid lining.

- Disconnect screen washer fluid lines from sprays, then remove bonnet lid from hinges and top gas damper heads.
- Disconnect positive terminal, remove battery, holder and rear mount bracket.
- Disconnect intake duct with debimeter and resonator.
- Disconnect solenoid retaining bolts.
- Disconnect battery mount front bracket and ABS control unit bracket.
- Unscrew top screw retaining engine oil dipstick sleeve to intake manifold.
- Remove front wheels.
- Drain coolant by opening cock at bottom of right hand side of radiator.

- Disconnect front wheel arch linings (2 parts each).
- Remove lower engine bay protection.
- Disconnect earth lead from gearbox mount.
- Remove clutch slave cylinder with mount bracket and reverse inhibition bowden cable.

- Disconnect left hand half-axle, then position to rear of engine bay.
- Disconnect first exhaust pipe section.
- Unscrew bolt retaining oil dipstick sleeve to crankcase and remove sleeve.
- Undo screws retaining power steering pump pulley, loosen auxiliary belt tensioner, remove belt and remove power steering pump pulley.
- Remove power steering pump without disconnecting lines and place to rear of engine bay.

- Disconnect gearbox linkage and remove reaction bracket from gearbox.
- Disconnect right hand half-axle coupling, then place to rear of engine bay.
- Unscrew both engine mounts (timing side).
- Unscrew brake pipe bracket, then place ABS ECU and bracket to one side.
- Disconnect coolant delivery and return lines to passenger compartment heater radiator from engine.

- Disconnect coolant pipe from butterfly valve case.
- Disconnect coolant sleeves between engine and radiator, then remove expansion tank.
- Disconnect throttle cable from butterfly valve case.
- Disconnect electrical leads from fuel injectors, timing sensor and timing variator sensor.

- Remove spark plug cover, disconnect electrical leads from ignition coils and earth point.

- Disconnect fuel delivery and return lines and lines fitted to intake manifold (without damaging plastic fuel manifold).
- Disconnect pipe connecting V.I.S. operating device from solenoid
- Disconnect battery positive lead (and starter motor) from connector block.
- Remove nut retaining power unit mount, gearbox end

Copyright Fiat Auto

10.

- Release reaction rod and reaction bracket.
- Remove timing belt guard.
- Fit universal hook 1860592000 into attachment brackets on power unit, then hoist power unit until under slight tension.
- Tilt power unit to remove from engine bay and stand on platform.

With power unit resting on platform and supported by universal hook and hoist, remove the following:

- modular manifold mount bracket;
- alternator rear mount brackets;
- alternator;
- intermediate propeller shaft mount;
- oil dipstick sleeve;
- gearbox;
- clutch - plate - pressure plate
- When refitting, align driven plate using locating tool and reverse removal instructions. Note particularly when refitting rubber coolant hoses, align groove on hose with ridge on rigid pipes to which hoses are fitted.

REMOVING REFITTING AUXILIARY COMPONENT BELT

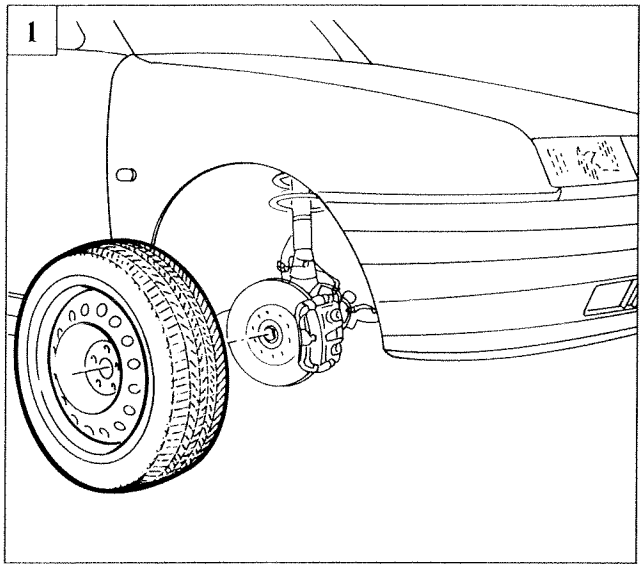

P3U09CJ01

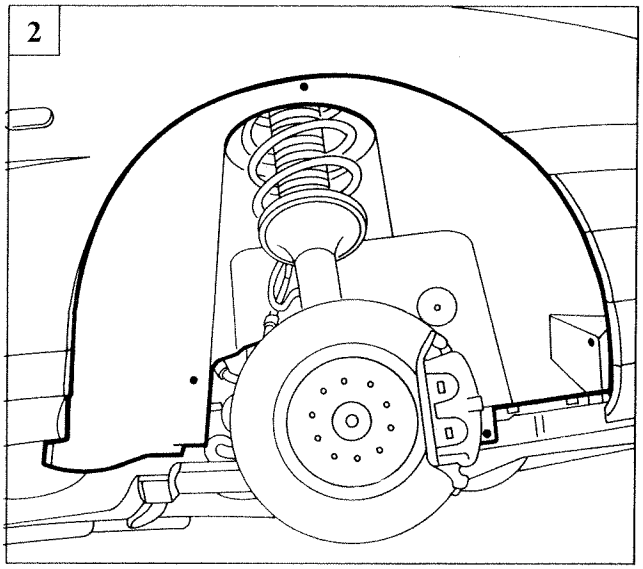

P3U09CJ02

1. Position vehicle on lift and remove right hand front wheel.
2. Remove the right hand wheel arch lining in order to gain access to auxiliary unit belt.

Check tension and condition of auxiliary unit drive belt and in particular for cracks, tears, surface wear (which looks smooth and shiny) and dry or hardened parts that could lead to loss of grip. If one of the above defects is found, replace the belt as described below:

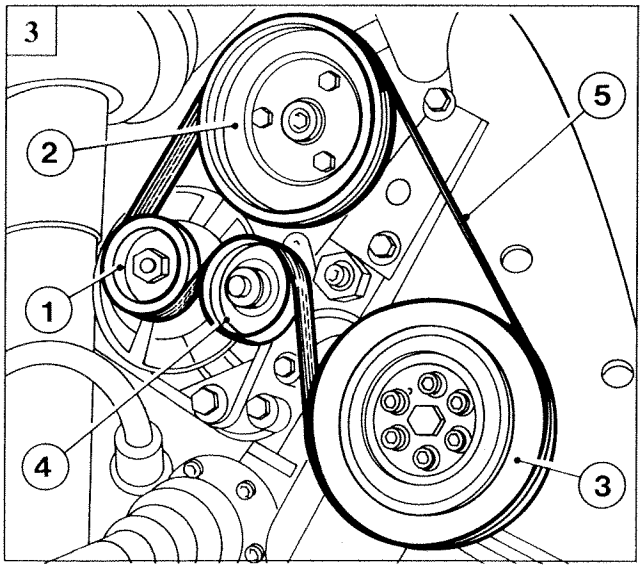

P3U09CJ03

3. View of auxiliary unit belt fitted on vehicle:

1. Alternator
2. Power steering pump
3. Of crankshaft pulley
4. Automatic tensioner
5. Auxiliary component belt

Avoid the belt coming into contact with oil or solvent that could impair the flexibility of the rubber with a consequent loss of grip

Copyright Fiat Auto

10.

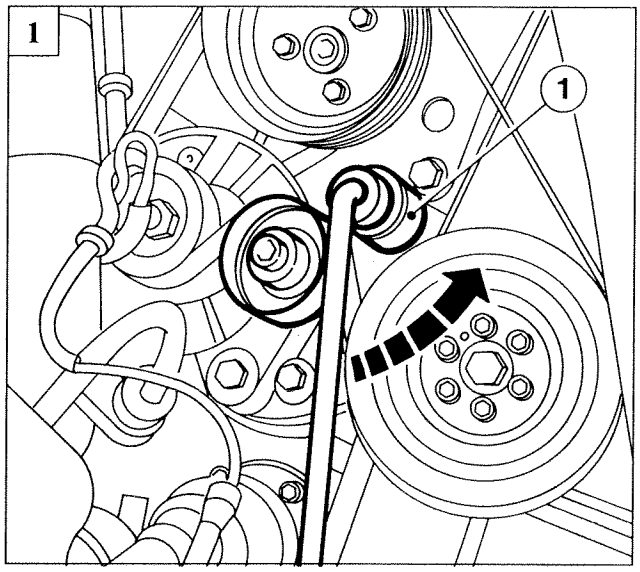

P3U10CJ01

1. Slacken belt tension by turning nut (1) of automatic tensioner anticlockwise.

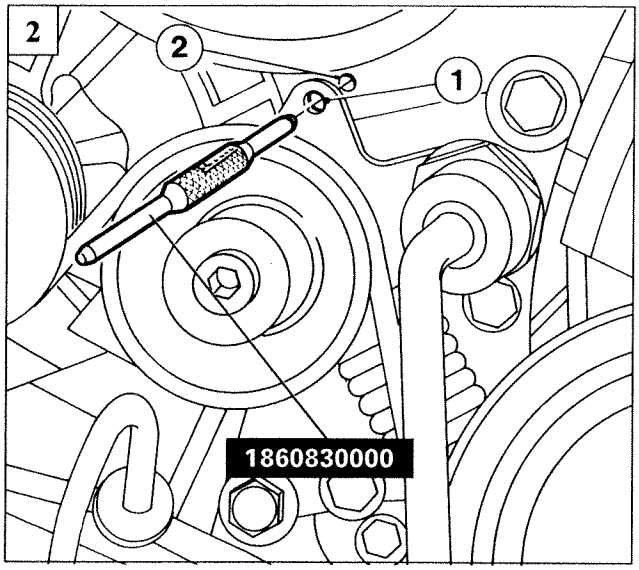

P3U10CJ02

2. Turn tensioner until reference hole (1) on tensioner is aligned with hole (2) on bracket; then insert tool 1860830000 in order to lock tensioner in this position.

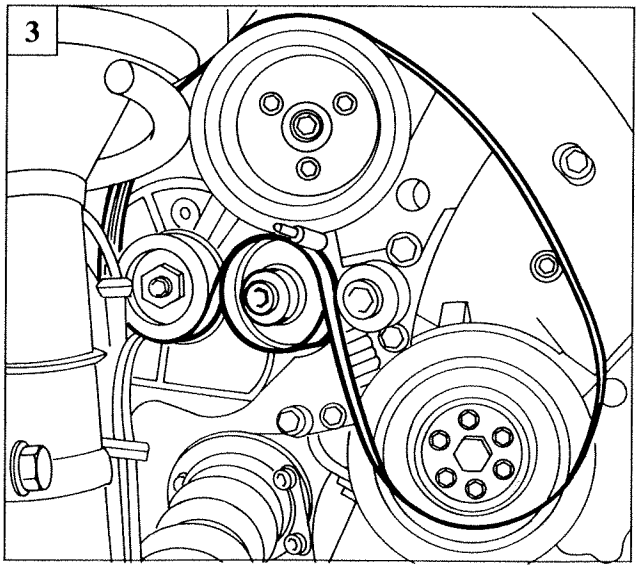

P3U10CJ03

3. Take off auxiliary unit belt.

Fit a new belt by carrying out removal instructions in reverse order. When tool 1860830000 is removed, preloaded automatic tensioner spring ensures belt is correctly tensioned.

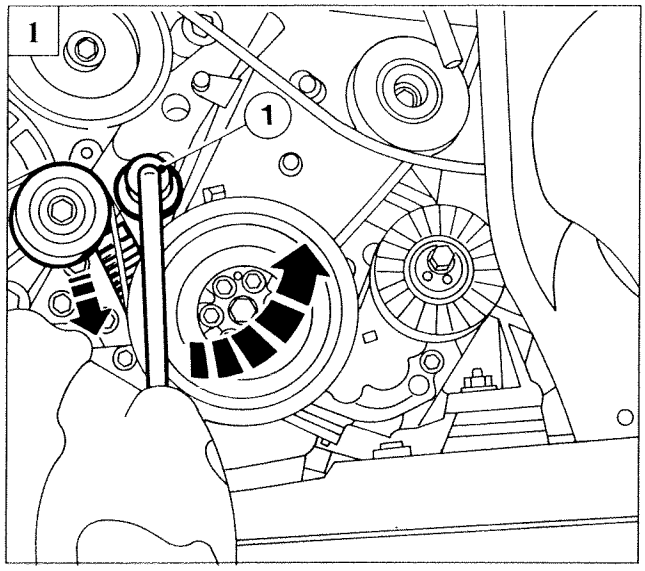

P3U11CJ01

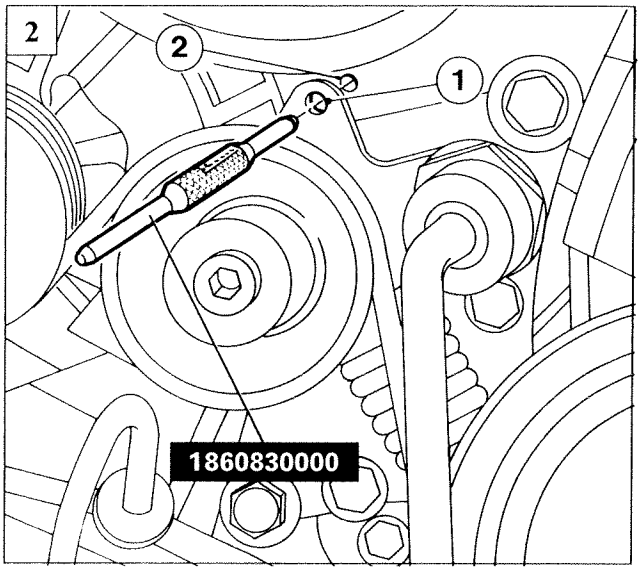

P3U10CJ02

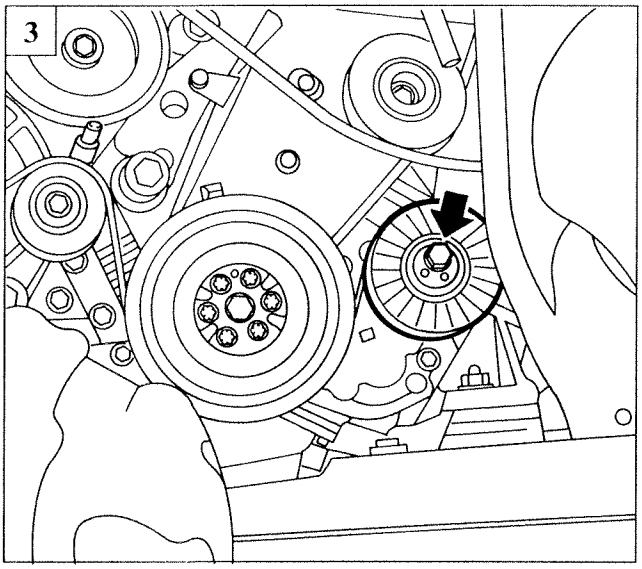

P3U11CJ02

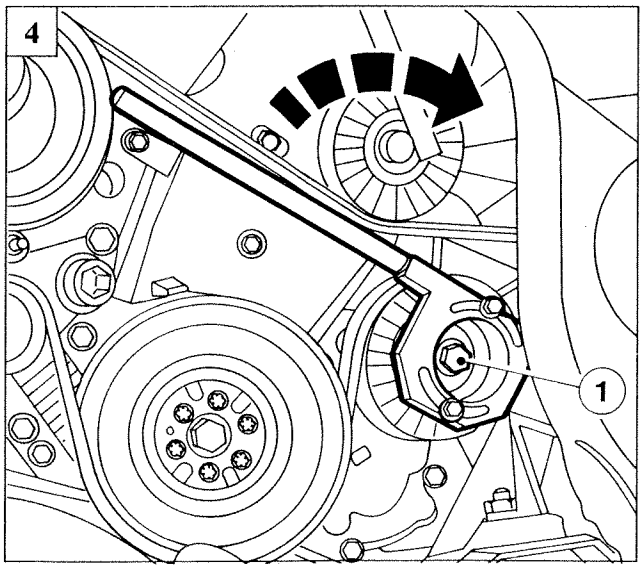

P3U11CJ03

Replacing auxiliary belt (for vehicles with air conditioner)

Position vehicle on lift and remove right front wheel and right wheel arch lining as described previously.

1. Loosen belt tension by turning automatic tensioner bolt (1) anticlockwise.

2. Turn tensioner until hole (1) on tensioner is aligned with hole (2) on bracket. Fit tool 1860830000 to lock tensioner in position.

3. Loosen tension of mobile guide pulley by adjusting retaining bolt. Take off auxiliary belt.

Refitting and tensioning auxiliary belt (for vehicles with air conditioner)

4. Fit belt by reversing removal instructions. Tension by positioning tools 1860826000 and 1860825000 on mobile guide pulley (not locked) and aligning holes. Turn the resulting lever upward until pin 1860830000 can be withdraw freely. Tighten mobile guide pulley retaining bolt (1) in this position. The preloaded automatic tensioner spring will ensure correct belt tensioning.

Copyright Fiat Auto

10.

REMOVING-REFITTING TIMING BELT

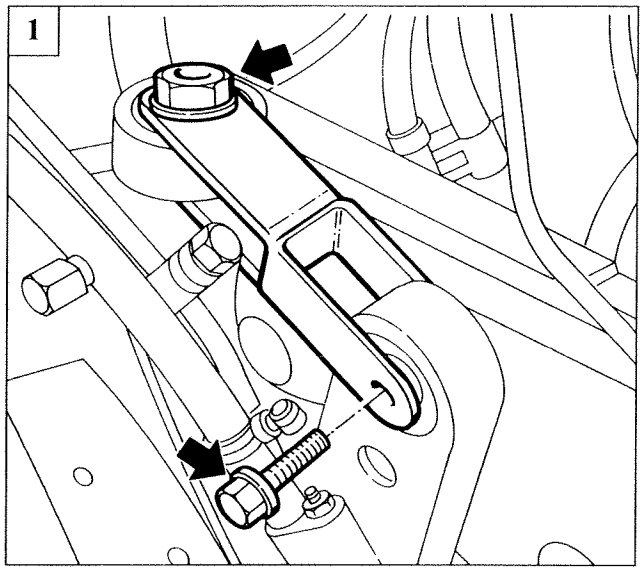

P3U12CJ01

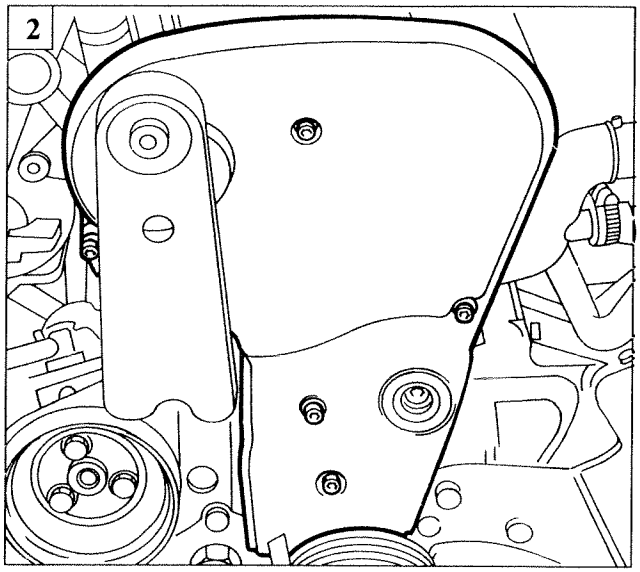

P3U12CJ02

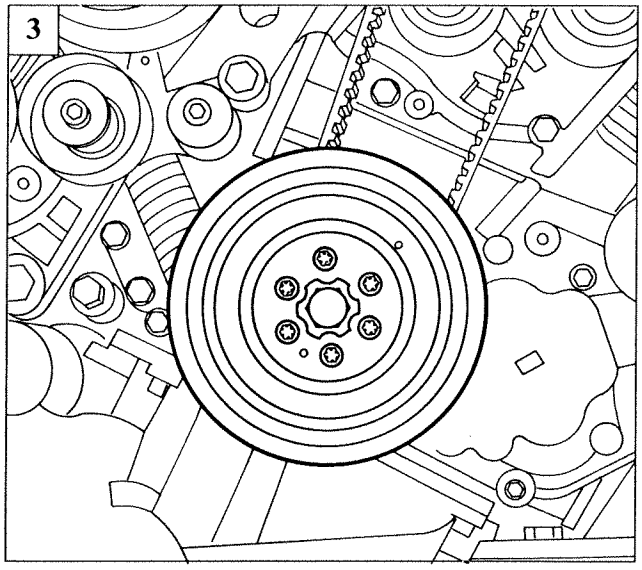

P3U12CJ03

Auxiliary belt must be removed before timing belt can be taken off.

1. Remove reaction rod by undoing bolts indicated. This operation is required in order to permit timing belt removal.

2. Remove timing belt cover.
3. Remove auxiliary drive pulley on crankshaft.
4. Remove high tension coil protective cover.

5. Remove high tension coil retaining screws. Take care to disconnect electrical connections and earth lead (1).

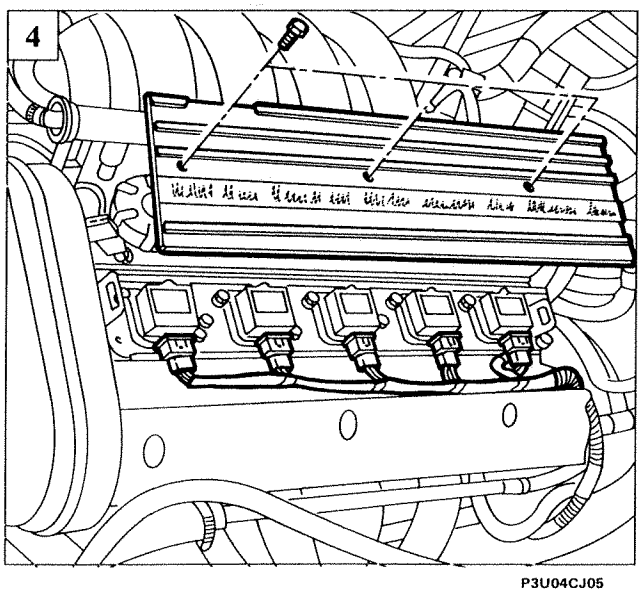

P3U04CJ05

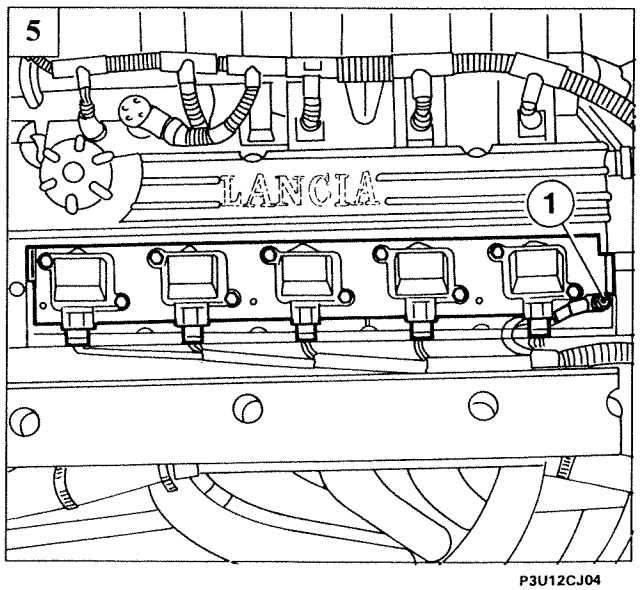

P3U12CJ04

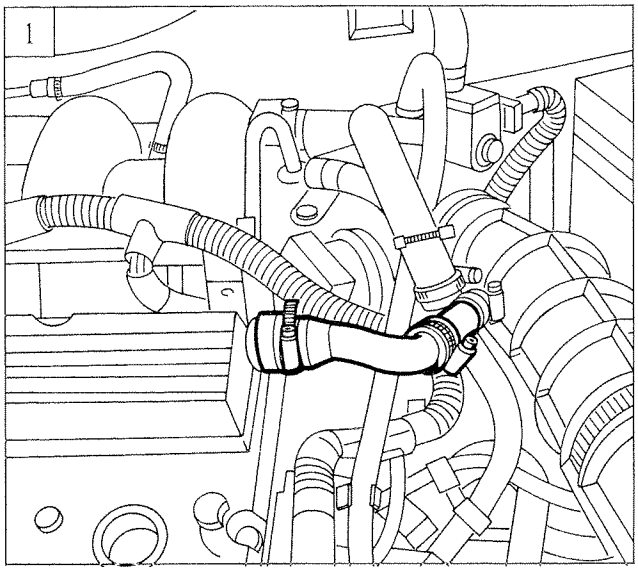

P3U15CJ03

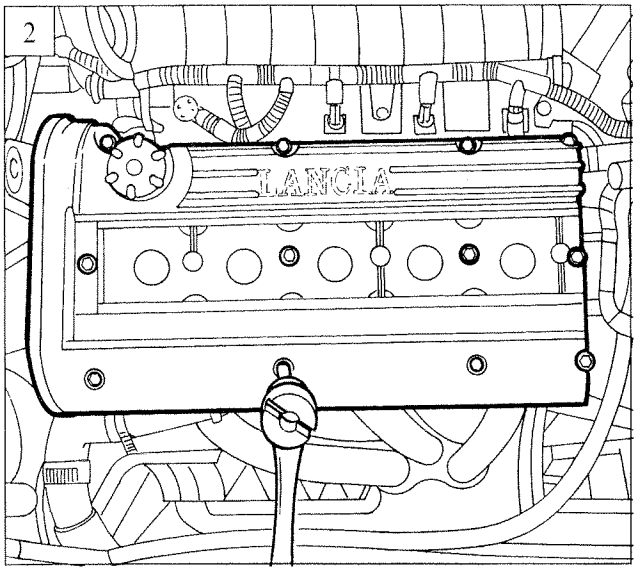

P3U15CJ04

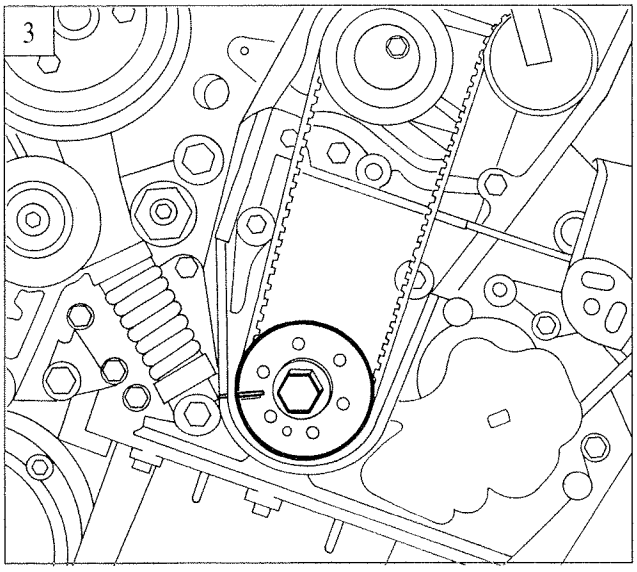

P3U15CJ05

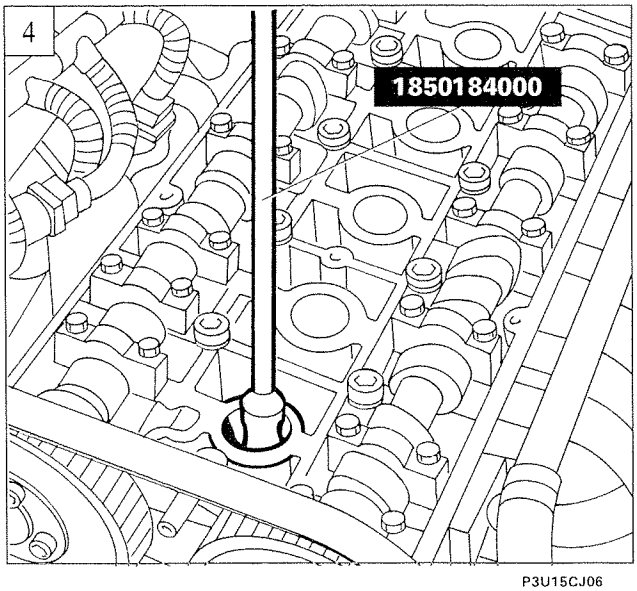

P3U15CJ06

1. Disconnect the oil vapour recovery pipe from the cylinder head cover.
2. Remove the cylinder head cover.
3. Turn the crankshaft drive gear so that the notch on the gear is aligned with the notch on the front camshaft cover. Under these conditions, the following situation arises:

   - crankshaft with cylinder n° 1 at T.D.C.;
   - exhaust camshaft in exhaust stage on cylinder no. 1;
   - intake camshaft in exhaust stage on cylinder no. 1.

For greater certainty, measure the exact position of the crankshafts and timing gear using a dial gauge as follows:

4. Remove the spark plug corresponding to cylinder n° 1 using wrench 1850184000.

Copyright Fiat Auto

1

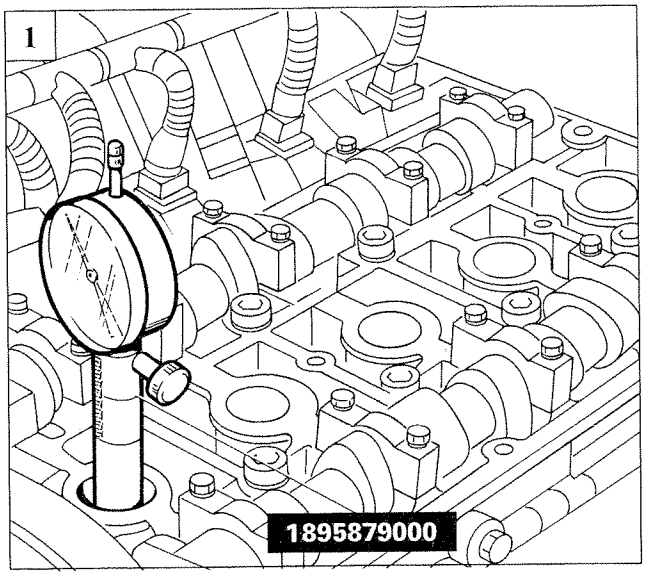

P3U15CJ07

2

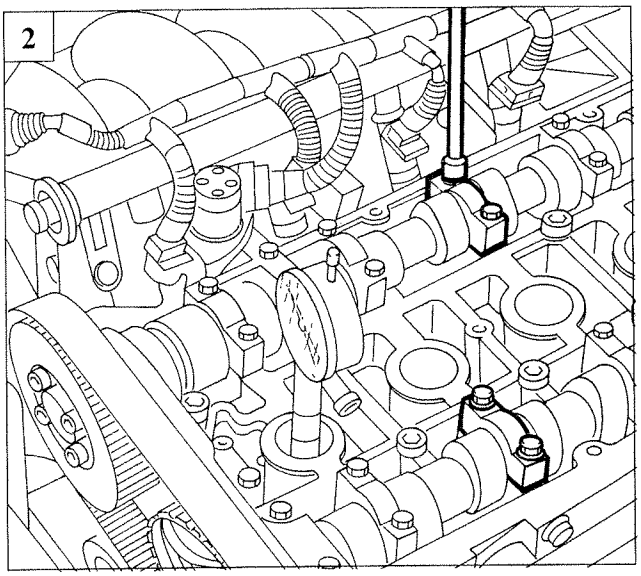

P3U15CJ08

3

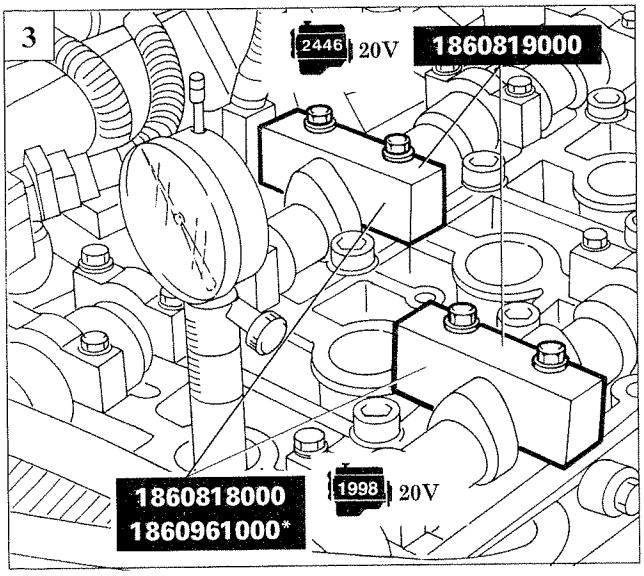

P3U15CJ09

1. Position the dial gauge on cylinder n° 1 using tool 1895879000 and check the camshaft is positioned exactly.
2. Remove the 3rd exhaust shaft retaining cap and the 9th intake shaft retaining cap.
3. Position and secure the tool pair in place of the caps removed previously.

* Tools valid for 96 range versions

he pair of tools must follow the profile of the camshafts exactly. They are identified by the wording "aspirazione" [intake] or "scarico" [exhaust] on each tool.

4-5. Slacken tension in the timing belt by undoing the nut shown in the figure, then prise off the belt.

4

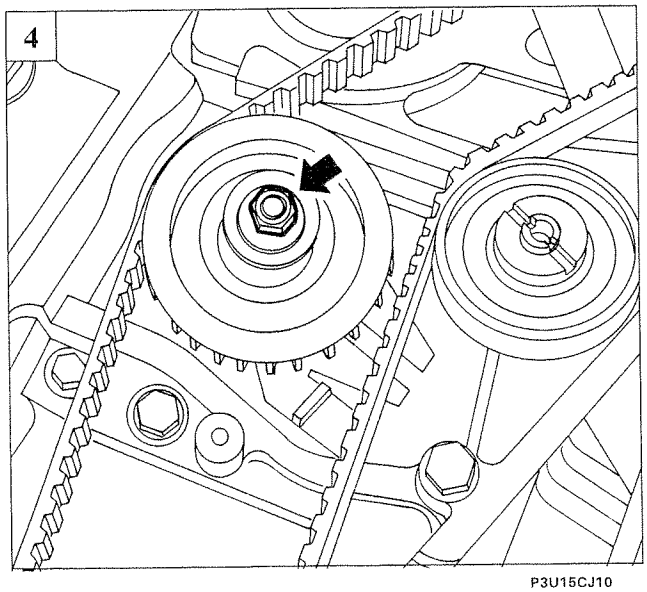

P3U15CJ10

5

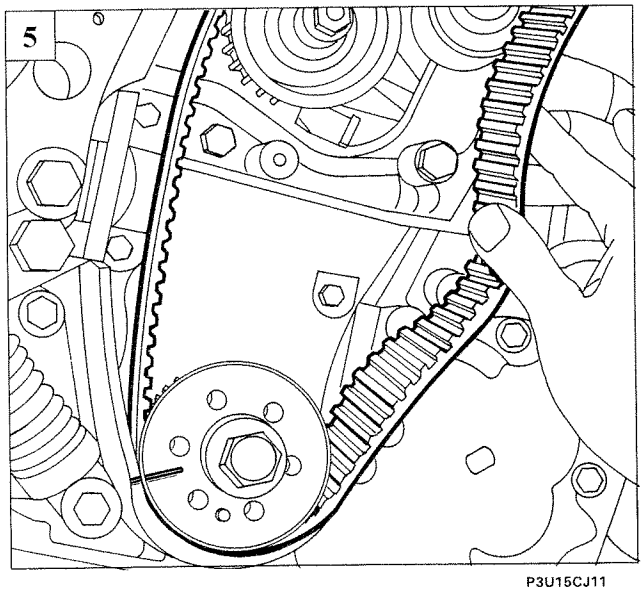

P3U15CJ11

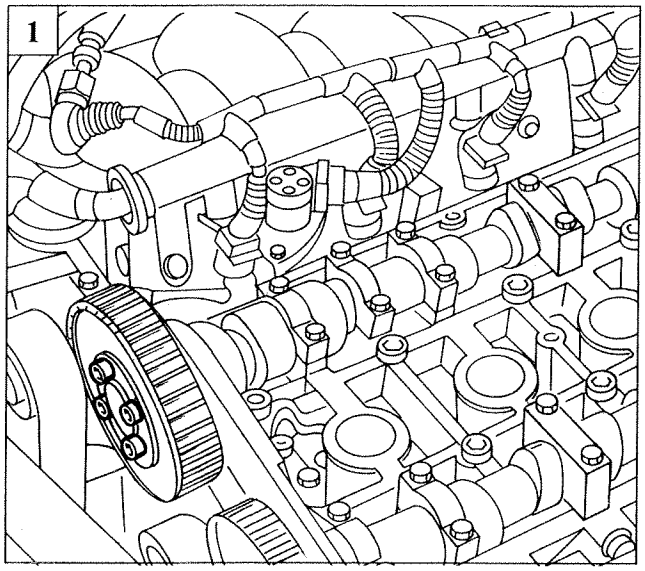

Fitting timing belt

1. Loosen intake and exhaust end camshaft pulley bolts to facilitate timing belt positioning.

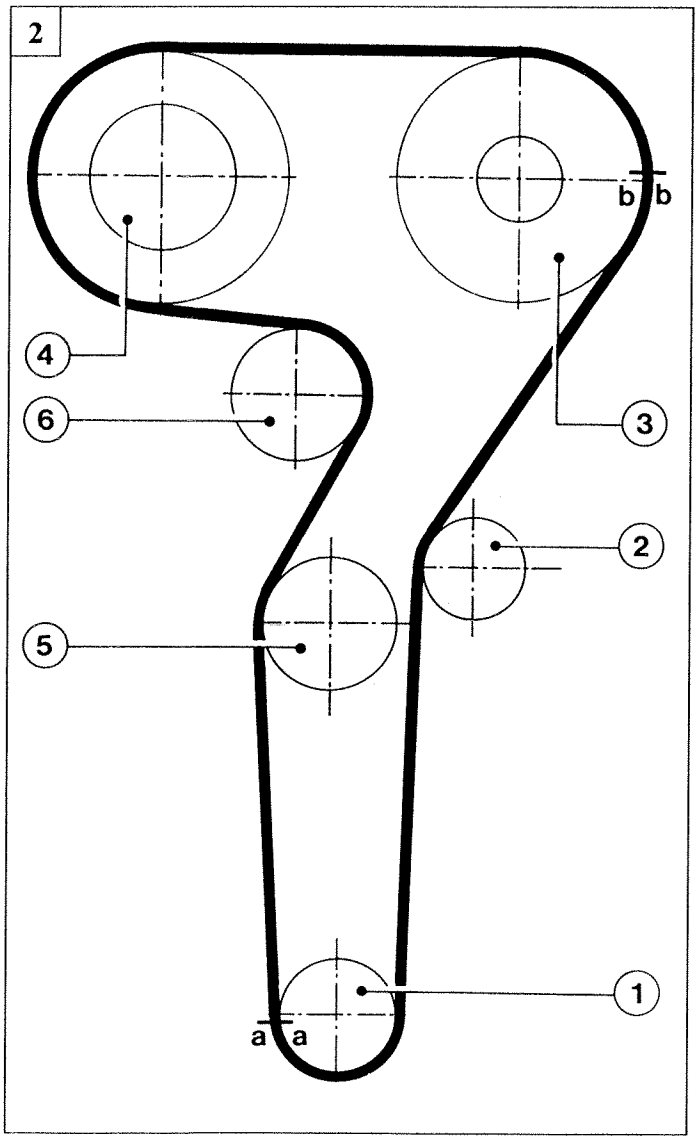

2. Observe the following procedure when fitting belt:

- crankshaft drive pulley (1);
- fixed guide pulley (2);
- exhaust camshaft pulley (3);
- intake camshaft pulley (4);
- automatic tensioner guide pulley (5);
- coolant pump guide pulley (6).

NOTE *When fitting the belt, avoid kinking the belt because this could impair belt structure*

An arrow and two notches are provided to allow an extra check on belt timing. Fit the belt so that the arrow faces in the engine rotation direction. When the belt is first fitted, the notches on the belt must coincide with indicators shown on crankshaft pinion (a - a) and exhaust end camshaft pulley (b - b).

Copyright Fiat Auto

1

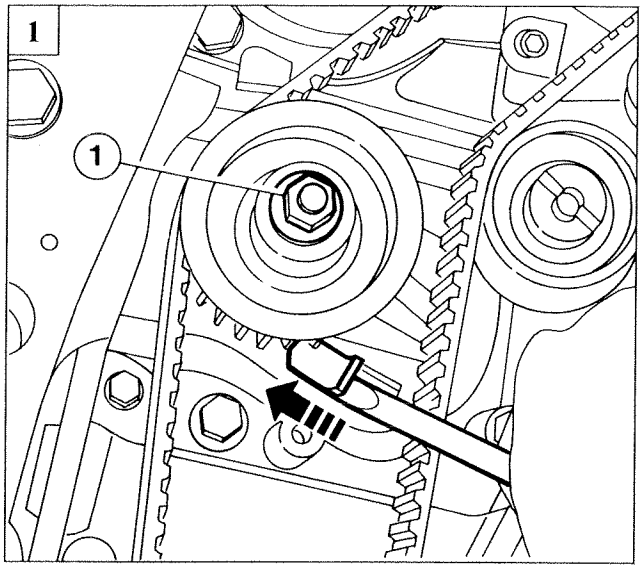

P3U16CJ01

2

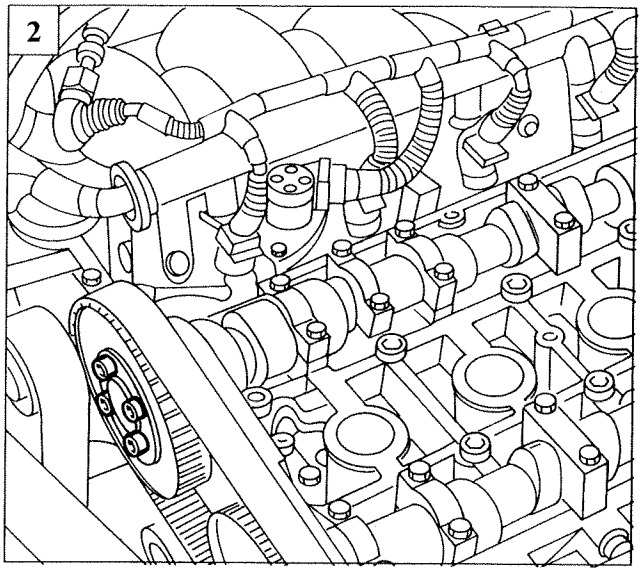

P3U16CJ02

3

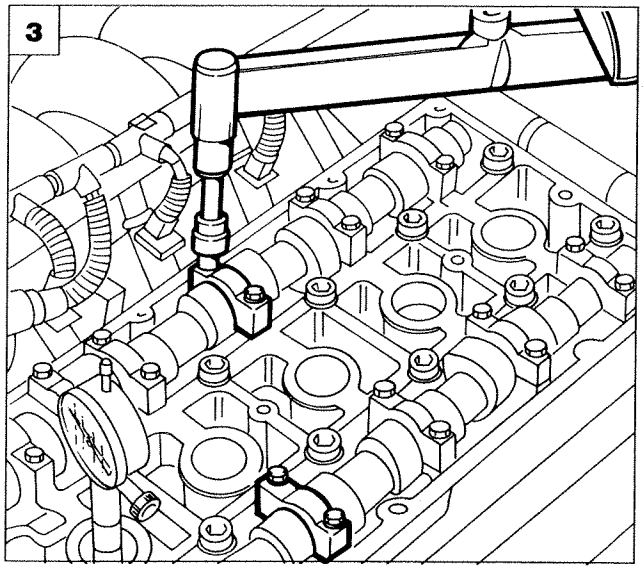

P3U16CJ03

4

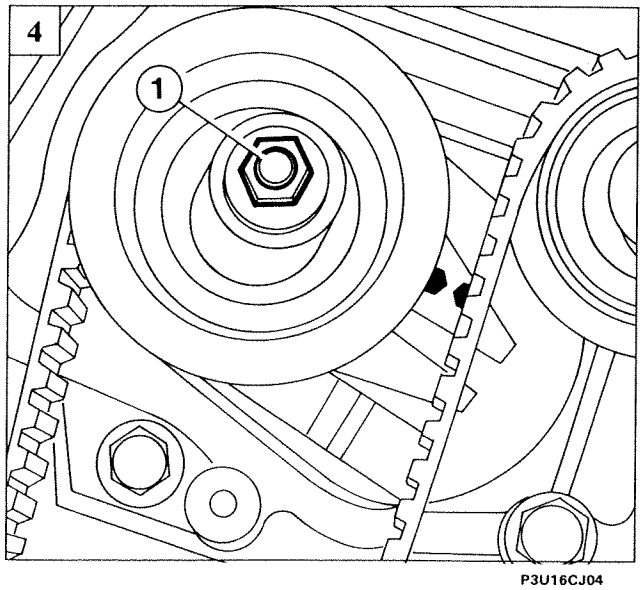

P3U16CJ04

Tensioning timing belt

1. Apply a force at the point indicated on the automatic tensioner so that it moves through its maximum travel and the belt is as taut as possible. Then tighten tensioner retaining nut (1) to mount

2. Tighten intake and exhaust side camshaft pulley retaining bolts.
3. Remove tool pair 1860819000 and secure camshaft caps to a torque of 1.5 daNm.

4. Turn camshaft through two turns in its normal direction of rotation until notch on camshaft gear is aligned with notch on front cover (cylinder no. 1 at TDC). Then undo tensioner retaining nut (1). Belt tension acting on tensioner tends to restore tensioner to position of minimum tension. During this stage, when the mobile indicator coincides with the fixed indicator, tighten nut (1) to a torque of 2.5 daNm and refit parts removed previously.

FUEL SYSTEM

page

BOSCH MOTRONIC M 2.10 MPI INTEGRATED INJECTION-IGNITION SYSTEM 1
- Introduction 1
- System components 1
- Description of injection system 2
- Description of ignition system 2
- SYSTEM FUNCTIONS 3
- SYSTEM OPERATING STRATEGIES 3
  - Adjusting ignition advance 3
  - Cold start control 3
  - Enrichment during acceleration 4
  - Fuel cut-off 4
  - Controlling engine idle speed 4
  - Limiting maximum rpm 5
  - Controlling combustion - Lambda probe 5
  - Fuel vapour recovery 5
  - Controlling knock 5
  - Controlling timing variator 5
  - Connection with heating/ventilation system 6
  - Connection to automatic transmission 6
  - System self-adaption 6
  - Connection with immobiliser 6
  - Automatic diagnosis 6
- RECOVERY STRATEGIES 8
  - Debimeter 8
  - Water temperature sensor 8
  - Air temperature sensor 8
  - Throttle potentiometer 8
  - Engine idle speed actuator 8
  - Lambda probe 8
  - Battery voltage 8
  - Knock sensors 8
- BOSCH MOTRONIC M 2.10 SYSTEM COMPONENTS 9
- FUEL SUPPLY CIRCUIT 9
  - Electric pump 10
  - Fuel filter 11
  - Fuel supply manifold and pressure regulator 11
  - Injectors 13
- AIR INTAKE CIRCUIT 14
  - Air intake circuit diagram 14
  - Butterfly valve case 15
  - Engine idle speed actuator 16
  - Throttle valve position sensor 16
  - Air temperature sensor 17
  - Debimeter 17
- ELECTRIC/ELECTRONIC CIRCUIT 18
  - Injection-ignition ECU (control unit) 18

page

  - Electrical connections between ECU/sensors and actuators 20
  - Identifying connections on control unit 19
  - Electrical connections between control unit/ignition coils and injectors]21
  - Location of components in engine bay 22
  - Diagram showing control unit data input and output 23
  - Single coil 24
  - RPM and TDC sensor 25
  - Coolant temperature sensor 25
  - Knock sensors 26
  - Injection timing sensor 26
  - Speedometer sensor 27
  - Timing variator 27
  - Inertia safety switch 29
- CIRCUIT CONTROLLING HARMFUL EXHAUST EMISSIONS 30
- FUEL EVAPORATION CONTROL AND VAPOUR RECOVERY CIRCUIT 31
  - Description of main evaporation control system components 32
  - Multifunction valve 32
  - Active carbon trap filter 33
  - Vapour cut-off solenoid 33
  - Safety and ventilation valve 34
  - Fuel vapour separator 34
- BLOW-BY GAS RECIRCULATION SYSTEM 35
- CHECKS-ADJUSTMENTS AND REPAIRS TO THE INJECTION/IGNITION SYSTEM ADDITIONAL TO DIAGNOSIS WITH FIAT/LANCIA TESTER 36
  - Removing-refitting fuel filter 36
  - Removing-refitting electric fuel pump 37
  - Removing-refitting fuel manifold 38
  - Checks on fuel circuit 39
  - Removing-refitting lambda probe 41
  - Removing-refitting active carbon trap filter and fuel vapour cut-off solenoid 41
  - Adjusting throttle cable 42
  - Removing-refitting electronic unit 42
  - Checking rpm and TDC sensor gap and resistance 42
  - Checking engine idle speed 43
  - Checking levels of polluting emissions 43

BOSCH MOTRONIC M 2.10 MPI INTEGRATED INJECTION-IGNITION SYSTEM (1996 range) 44

Copyright Fiat Auto

COPYRIGHT FIAT AUTO

The reproduction, even partial, of the text and illustrations is prohibited.

The information contained in this publication is purely indicative and could be out of date following modifications made by the Manufacturer, at any time, for technical or commercial reasons or in order to conform to legal requirements in the various countries.

Fiat Auto S.p.A.
D.M.C. - M.P.S.
Servizi Post Vendita - Assistenza Tecnica
10040 Volvera - TO - (Italia) - Largo Senatore G.Agnelli, 5
Publication no. 506.475/08 - Maggio 1996 - 440
Printed in Italy - Tip. Europrint - TORINO
order no. 60489725-

BOSCH MOTRONIC MPI INTEGRATED INJECTION-IGNITION SYSTEM

Introduction

The Bosch Motronic system fitted to the LANCIA k 1998, 5 cylinders 20 valve engine belongs to the category of digital electronic systems with inductive discharge and static distribution integral with sequential, phased electronic injection.
This system adopts a single ECU, single wiring system and a set of common sensors.

The unit injects an exact quantity of fuel into the engine intake duct, upstream of the intake valves. This mixes with the air admitted to the cylinder to produce the correct mixture proportions.

The Motronic M 2.10 ensures efficient operation by optimising performance and fuel economy, while harmful emissions are reduced by responding in real time to a range of engine service conditions.

System components

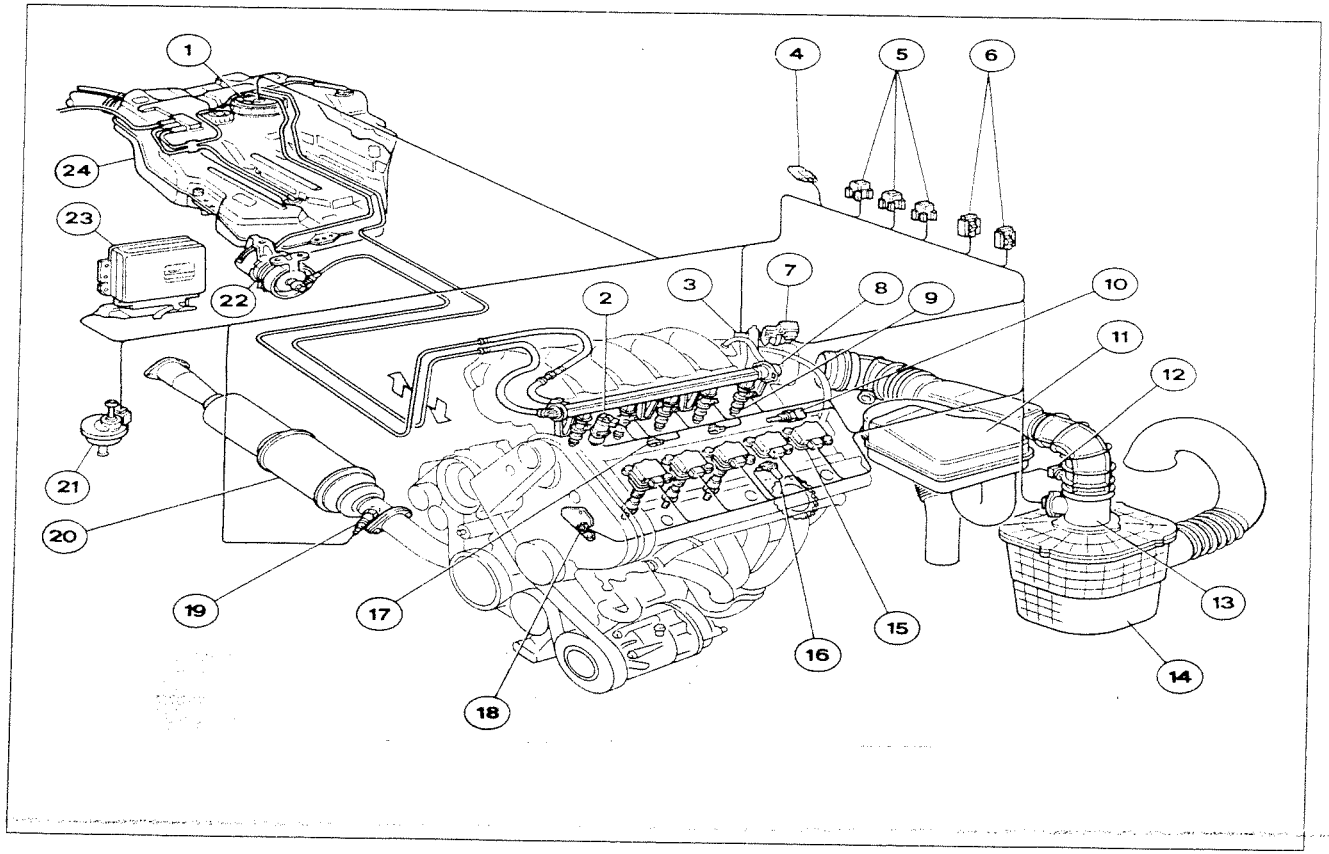

P3U01CW01

1. Electric fuel pump
2. Timing variator control solenoid
3. Throttle position sensor
4. Diagnostic socket
5. Relay unit
6. Fuel pump fuse and lambda probe
7. Engine idle speed actuator
8. Fuel pressure regulator
9. Injectors
10. Coolant temperature sensor
11. Resonator
12. Intake air temperature sensor
13. Air flow meter (debimeter)
14. Air cleaner
15. Ignition coils
16. Rpm and TDC sensor
17. Knock sensors
18. Timing sensor (cam angle)
19. Lambda probe
20. Catalytic converter
21. Fuel vapour control solenoid
22. Fuel filter
23. Injection-ignition ECU
24. Fuel tank

Copyright Fiat Auto

General description of injection system

Two essential conditions must be satisfied in the preparation of a air-fuel mixture to ensure efficient operation of controlled ignition engines:

1. metering (air/fuel ratio) must be maintained as close as possible to a stoichiometric ratio in order to ensure combustion takes place quickly without pointless waste;

2. the mixture must be made up of fuel vapours diffused through the air as finely and evenly as possible.

The nozzles of the Bosch Motronic M2.10 system perform the task of distributing the fuel by nebulizing it into minute droplets.
Because input air may be under a range of absolute pressure conditions, the amount of fuel to be injected should be adjusted in order not to alter the weight ratio between air and fuel.
A constant ratio is obtained by adjusting fuel feed pressure, using a regulator, according to intake duct vacuum level so that the difference between the two pressures is constant under all engine service conditions.

Optimal fuel metering is calculated on the basis of the following measurements:
exact quantity of air taken in by debimeter (air flow meter)
- engine rpm, relayed by rpm sensor
- acceleration required, relayed by butterfly valve position sensor
- coolant temperature, relayed by sensor on thermostat mount;
- exhaust gas oxygen content, relayed by lambda probe.

This information is processed by a microcomputer in the injection ECU, which calculates base pulse constant using experimentally calculated values mapped in a specific memory of the control unit.

General description of ignition system

The ignition system is inductive discharge type (i.e. without a high tension distributor) with a power module inside the electronic control unit.

An individual coil is fitted for each spark plug (single coil). The advantages of this are as follows:
- lower electrical load
- ensures constant discharge at each spark plug

An ECU memory map contains an entire set of optimal advance settings that could be adopted by the engine throughout its service range according to rpm level and engine load.

These settings were obtained experimentally, through a long series of practical tests carried out on prototypes on an engine test rig. The advance settings able to provide the best compromise between the conflicting requirements of high power with low fuel consumption and exhaust emissions were identified in this way.

These optimal advances were then saved in the system control unit. During engine operation, the control unit is kept continually informed on speed (engine rpm) and load conditions. On the basis of these it selects from its memory the advance value required by the engine and governs the ignition unit power module so that a spark is activated in the spark plug of the cylinder in combustion phase with optimal advance.
The control unit computer also corrects this value on the basis of other factors such as engine temperature, intake air temperature and throttle position in order to obtain an optimal ignition point.

Information needed by the ECU to control the single coils is transmitted by means of electrical signals produced by the following sensors:

a. **Rpm sensor** generates a single-phase alternating current with frequency proportional to rpm.
b. **Air flow meter (debimeter)** converts engine air intake quantity into an electrical signal and sends this to the ECU.
c. **Air temperature sensor** converts intake air temperature to an electrical signal, which is sent to the ECU.

d. **Two knock sensors** located on upper part of the crankcase; one between cylinders 1 and 2 and the other between cylinders 4 and 5. These allow the control unit to identify the cylinder with knock (or about to experience knock) and correct ignition advance only in the spark plug for the affected cylinder.
0. **Throttle valve position sensor** converts throttle angle into an electrical system. This allows the ECU to identify idling, partial and full load conditions.

SYSTEM FUNCTIONS

The ECU controls ignition time and idling air flow in order to allow the engine to run evenly despite fluctuations in environmental parameters and applied loads. It also controls and manages injection so that the stoichiometric ratio (air fuel) is always optimal.

The ECU establishes injector control time by applying a relatively simple rule, which may be summarised as follows.
Assuming fuel physical properties (viscosity and density) and difference between fuel pressure and intake duct vacuum to be constant, the amount of fuel injected depends solely on injector opening time.

The injection-ignition system performs the following essential functions:

- governing injection time;
- adjusting ignition advance;
- cold start control;
- enrichment during acceleration;
- fuel cut-off during over-run);
- controlling and managing engine rpm;
- restricting maximum rpm levels;
- controlling combustion-lambda probe;
- fuel vapour recovery;
- controlling knock
- controlling timing variator
- connection to air conditioner (where fitted);
- connection to automatic transmission (where fitted);
- system self-adaption
- connection with immobiliser;
- automatic diagnosis.

SYSTEM OPERATING STRATEGIES

Digital technology has made it possible to optimise fuel economy and performance by means of programmed rpm and engine load maps memorised inside the ECU.

The control unit is able to control injectors with extreme speed and accuracy. Opening time is computed on the basis of engine load (rpm and air flow). Battery voltage and engine coolant temperature are also considered.
Injection is sequential and phased for each cylinder. The moment of injection is not simultaneous for all cylinders but occurs at the optimal injection point in each case.

Adjusting ignition advance

The ECU uses internal memory maps to compute advance on the basis of engine load (minimum, partial, full, according to rpm and air flow), intake air temperature and engine coolant temperature.

Ignition may be delayed selectively at a required cylinder. This is identified through a combination of values recorded by knock and cam angle sensors.

Cold start control

Under these conditions, the mixture naturally becomes leaner due to poor fuel particle turbulence at low temperatures, reduced evaporation and condensation on the intake manifold inner walls. The situation is exacerbated by higher lubrication oil viscosity.
The ECU recognises this condition and corrects injection time on the basis of coolant temperature, intake air temperature, battery voltage and engine rpm signals.

Copyright Fiat Auto

Ignition time is solely dependent on rpm and engine temperature.

During start-up, the ECU sends a simultaneous command to all injectors (full-group) and switches to normal sequential, phased operation after identifying the phonic wheel reference.

While the engine is warming up, the ECU governs the idle speed actuator to compute the quantity of air required to ensure the engine keeps idling without stalling.
Rpm decreases in inverse proportion to engine speed until rated speed is achieved with the engine warm.

Enrichment during acceleration

When the driver accelerates, if the air flow meter signal increase exceeds a given level, the ECU not only adapts injection to the new requirement but also increases it further to achieve the required rpm level swiftly.

As the required rpm level approaches, the injection increase is gradually eliminated.

NOTE *The acceleration requirement is also measured by a potentiometer on the throttle. This ensures the vehicle can be driven to a Service point under the best possible conditions in the case of a fault in the air flow meter.*

Fuel cut-off during over-run

Fuel cut-off during over-run is adaptive.
With throttle closed and rpm level greater than 1700 (for engine speed lower than 1700 rpm, the Cut-off function is inoperative to maintain optimum driveability). Fuel injection is deactivated.

When the fuel flow ceases, rpm begins to drop at a varying rate according to vehicle driving conditions.

Before reaching idling level, rpm drop rate is checked.
If the fall exceeds a given level, fuel flow is partly restored in accordance with a cushioning strategy designed to prevent the engine stalling when idling (dashpot).
Once this condition is achieved, normal idling functions are restored and cut-off is reactivated only when the fuel cut-off threshold is exceeded to prevent engine working in starts. Fuel restoration and cut-off thresholds vary according to engine temperature.

Another ECU fuel cut-off strategy intervenes during partial deceleration, i.e. when lower engine load is required.
This function is active only if the new situation lasts for a pre-established time and after adapting ignition advance angle to the new situation.

Controlling and managing engine rpm

Idle speed is adjusted under all service conditions by means of a constant idle actuator that acts on the throttle by-pass.
This not only controls idle speed but also acts as additional air box and governor for activation of various appliances (e.g. air conditioning compressor). When the throttle is closed, the actuator governs by-pass gap to compensate for appliance power demand in order to maintain idle speed as constant as possible around a level of 800 rpm.
The actuator fitted to this version ensures extremely prompt adjustment because by-pass opening and closure are both controlled by magnetic coils.
Idle speed is corrected not only by the constant idle actuator but also through ignition angle adjustment (advance) because the latter acts more quickly.

NOTE *The self-adaptive function does away with the need for idle speed adjustment. The butterfly valve case sensor recognises when the throttle is closed and thus corrects any effects of wear on throttle closure position that may arise in time.*

Restricting maximum rpm levels

When the ECU notes that a maximum engine rpm threshold set by the manufacturer has been exceeded, it stops controlling the injectors and thus prevents the engine increasing rpm any further.
When rpm returns to less critical levels, fuel inejction is restored.

Checking combustion - Lambda probe

The lambda probe provides the ECU with data on quantity of oxygen in exhaust emissions and hence correct air-fuel metering
The mixture is optimal when lambda = 1 (optimal stoichiometric mixture). The electric signal sent by the probe to the ECU alters abruptly when mixture composition alters from lambda = 1. When mixture is lean ($\lambda > 1$) the ECU increases fuel quantity and reduces it when the mixture is rich ($\lambda < 1$) In this way, the engine works around an ideal lambda value as far as possible.
The lambda probe signal is processed in the ECU by an integrator that prevents abrupt injection time changes when correcting mixture concentration.
The probe is heated with an electrical coil so that the correct operating temperature can be achieved rapidly (about 300 °C).
This probe is therefore used to adjust fuel combustion with great accuracy. This helps emission control requirements to be met.

Fuel vapour recovery

Fuel vapours (pollutants according to regulations) are collected in a liquid-vapour separator where they condense and return in liquid form to the tank through fuel lines.
The remaining fuel vapours leaving the separator are sent to an active carbon filter and then on to the engine where they are burnt. This is carried out by a solenoid, which is controlled by the ECU only when engine load conditions permit correct fuel combustion without engine operation being affected. The ECU compensates for the amount of fuel injected by reducing flow to injectors.

Controlling knock

This function detects the presence of knock by processing signals from relevant sensors. The ECU continually compares signals from sensors with a threshold level - in turn continually updated to take into account background noise and engine age.
The ECU is thus able to detect the presence of knock (or imminent knock) and reduce the injection advance until the effect disappears. The advance is then gradually restored to original levels.
When accelerating, a higher threshold is used to take into account increased engine noise in these circumstances. The knock control strategy is also self-adaptive. This means that advance reductions repeated regularly are memorised in order to adjust mapping to the range of conditions experienced by the engine.

Controlling timing variator

The ECU controls the timing variator solenoid according to engine load level. If engine load exceeds a given threshold, the ECU sends a signal to the solenoid which in turn allows the variator to reduce intake setting distribution graph by 18° (intake valve camshaft turned through 9°).
When engine load drops below a given threshold, the ECU deactivates the solenoid and the variator restores inlet timing to previous basic values.
The timing variator is naturally controlled with a hysteresis field, i.e. the solenoid activation solenoid is always higher than the deactivation threshold. This prevents situations of balance and hence an over-rapid changeover between one distribution graph and another with significant operating anomalies.

Copyright Fiat Auto

Connection with heating/ventilation system

When the air conditioner is turned on, the compressor takes up power from the engine, which tends to stall when idling. To prevent this, the ECU adjusts air flow to the new power requirement by controlling the relevant actuator (adjustment also occurs under other conditions to maintain optimal driveability). The system also cuts-off the supply to the compressor momentarily if the engine is subject to high power demands (strong acceleration).

Connection to automatic transmission

The ECU governs idle speed according to load imposed when the selector lever is moved to a new gear.

System self-adaption

The ECU features a self-adaptive function able to recognise changes occurring in the engine due to settling and component/engine ageing.
Such changes are memorised in the form of changes to the basic maps and serve the purpose of adapting system operation to gradual changes in engine and components with regard to the original specification.
This adaptive function also compensates for inevitable differences (due to manufacturing tolerances) between replacement parts. This allows the vehicle to operate as efficiently as possible without the need for specific adjustments and checks.
The self-adaptive parameters are lost if the ECU is disconnected.

Connection with immobiliser

For extra protection against theft, the vehicle is fitted with an immobiliser that allows injection-ignition system activation only when an electronic code is entered.
Each time the key is turned to STOP, the immobiliser system deactivates the injection-ignition ECU completely.
When the ignition key is turned to MAR, the following operations take place in order:

1. The injection-ignition ECU asks the immobiliser ECU for a secret code in order to deactivate the function lock.
2. The immobiliser ECU responds by sending the secret code only after receiving an identification code transmitted by the ignition key, which is fitted with a special transponder.
3. Identification of the secret code allows deactivation of the function lock and the injection-ignition ECU is able to activate the normal system management program.

A special bidirectional serial line allows exchange of information between injection-ignition ECU and immobiliser control unit.
If the immobiliser system is faulty, the engine can still be started using an emergency procedure.



It is absolutely forbidden to exchange control units between different vehicles to check their efficiency.
During testing, before replacing a control unit, check that it is really faulty: activation of a new control unit will lead to memorisation of a secret code which will render the unit completely unusable on other vehicles.

Automatic diagnosis

The Motronic M 2.10 injection-ignition system features an**automatic diagnosis**" function able to memorise sensor and actuator faults in order to facilitate subsequent identification and correction. Faults appear on the infocenter display.
The system can be subjected to comprehensive fault diagnosis through active dialogue with a Fiat/Lancia tester.

If sensor faults are detected, the ECU replaces the signal from the faulty sensor with a setting from its memory **(recovery)** to keep the engine running. Once detected, the fault is saved permanently in the memory and the sensor excluded from the system until the signal is again compatible.

The same procedure is applied if the fault affects an actuator or control port. The infocenter indicates a fault when a fault is detected and replaced with a recovery setting.
The following parameters may be managed by the ECU in case of failure: debimeter, idle adjustment actuator, coolant temperature sensor, butterfly valve position sensor, lambda probe, air temperature sensor, battery voltage and knock sensors. In the case of faults in ECU, timing sensor or injectors, the system does not identify the fault and the vehicle stops. If required, the faults may be read off ECU using a Fiat/Lancia Tester.

Recording faults:

This is carried out while implementing baseline sensor/actuator management function.

Memorising error and structure of error memory:

The ECU memorises errors in the order they occur. The following are memorised for each error: error location and type, 2 environmental conditions (specific for each fault type) measured at moment fault occurs - and a frequency count.

Defect classification:

If a defect is identified for the first time and error status persists for time t > 0.5s, the defect is memorised as "permanent". If the defect subsequently disappears, it is memorised as "intermittent" and "not present". If the fault then reappears, it is memorised as "intermittent", but now becomes "present".

Classifying a fault as "permanent" activates the recovery functions. When the fault reappears, the normal reading or implementation function is restored when the fault disappears.
Some fault types are classified as "important", i.e. significant in terms of emission control regulations. An infocenter tells the user when these faults are present.

Frequency counter:

A frequency counter is assigned to each error. This is used to determine the moment at which a fault that is no longer present occurred. The counter is set to 10 when a fault is first detected. If the fault disappears, the counter remains at its current level. If the fault reappears, the count is increased by 1 (up to a top limit of 60).

The count decreases each time the vehicle is started without the fault reappearing. If the count reaches zero, the fault is automatically deleted from the memory.
If the fault reappears after the count has decreased, the counter is set to 10 (but remains unchanged if already higher than 10).

Fault indication

The infocenter indicates a fault when a defect is saved as "present" and "important".

Deleting errors:

When the frequency counter reaches 0, the fault and associated parameters are deleted.

The entire error memory is deleted immediately in the following cases:
- "delete error memory" command sent by tester;
- supply to control unit cut off (by disconnecting battery or control unit connector).

Active diagnosis:

This is carried out upon a command by the Fiat Tester. The following may be activated: injectors, fuel vapour solenoid, idle actuator, a/c compressor relay (if present) and timing variator solenoid.

Copyright Fiat Auto

RECOVERY STRATEGIES

Debimeter

Recovery: if no error is noted simultaneously for throttle potentiometer, idling engine load is computed according to rpm level. If a simultaneous error is noted in the throttle potentiometer, engine load and advance values are allocated by reference to a table and according to rpm.
Additional measures: mixture and idling level self-adaption blocked at current values.

Water temperature sensor

Recovery: if air T $\leqslant$ 19,9 °C, engine T assumed = Air T for three minutes. Subsequently engine T = 80 °C. If air T $\geqslant$ 19.9 °C, engine T = 80 °C immediately.
Additional measures: mixture and idle level self-adaption blocked at current values.

Air temperature sensor

Recovery: air T assumed to be = 20.4 °C
Additional measures: mixture self-adaption blocked at current levels

Throttle potentiometer

Recovery: fixed throttle opening angle assumed = 10°
idle status: air flow < 8 m3/h;
exit from minimum status: air flow > 8 m3/h;
full load status: engine load > 6.5 ms and simultaneous rpm > 2000 RPM;
exit from full load status: engine load < 6.5 ms or rpm < 2000 RPM.
Additional measures: gradual rpm decrease at idle speed (dashpot) and idle self-adaption strategies are blocked.

Engine idle speed actuator

Recovery 1: valve in recovery position, close to idle air flow for:
- d.c. battery V on opening or closure windings or opening and closure winding;
- a.c. on opening or closure windings or opening and closure windings;
- c.c. battery V on opening winding and a.c. on opening winding
- d.c. Battery V on closure winding and a.c. on opening winding.

Recovery 2: valve opened 0% for:
- d.c. Battery V on opening winding and d.c. GND on closure winding;
- a.c. on opening winding and d.c. GND on closure winding.

Recovery 3: valve open 50% for:
- d.c. GND on opening or closure or opening and closure windings

Recovery 4: valve open 100% for:
- d.c. battery V on closure winding and d.c. GND on opening winding;
- a.c. on closure winding and d.c. GND on opening winding.

Additional measures: idle self-adaption blocked at current values and idle control blocked.

Lambda probe

Recovery: the lambda signal is ignored (open loop) for probe voltage > 1.099 V or between 0.400 and 0.518 V for longer than 2.55 s.
Probe voltage concentration self-adaption blocked < 0.0879 V for longer than 2.55 s.
Open loop, max. value of lambda integrator (FR) taken as last effective probe voltage reading < 0.0879 V and simultaneously FR = 1.4.
FR blocked at limit value reached for FR > 1.25 or < 0.75 for at least 15 s.

Battery voltage

Recovery: idle self-adaption and concentration blocked at current values for voltage > 16.01 V or < 10 V.

Knock sensor

Recovery: ignition advance computed on the basis of water temperature and air temperature.

BOSCH MOTRONIC M 2.10 SYSTEM COMPONENTS

The Bosch Motronic M 2.10 injection-ignition system is made up of four interdependent circuits:

A. Fuel supply circuit
B. Air intake circuit
C. Electric/electronic circuit
D. Circuit for checking harmful exhaust emissions

Two additional devices and circuits closely connected to the injection-ignition system are designed to reduce harmful vehicle emissions to bring them into line with USA'83 standards and the more stringent EEC stage 2 regulations. These are as follows: **fuel evaporation control and vapour recovery circuit; crankcase vapour recirculation and recovery circuit.**

A. FUEL SUPPLY CIRCUIT

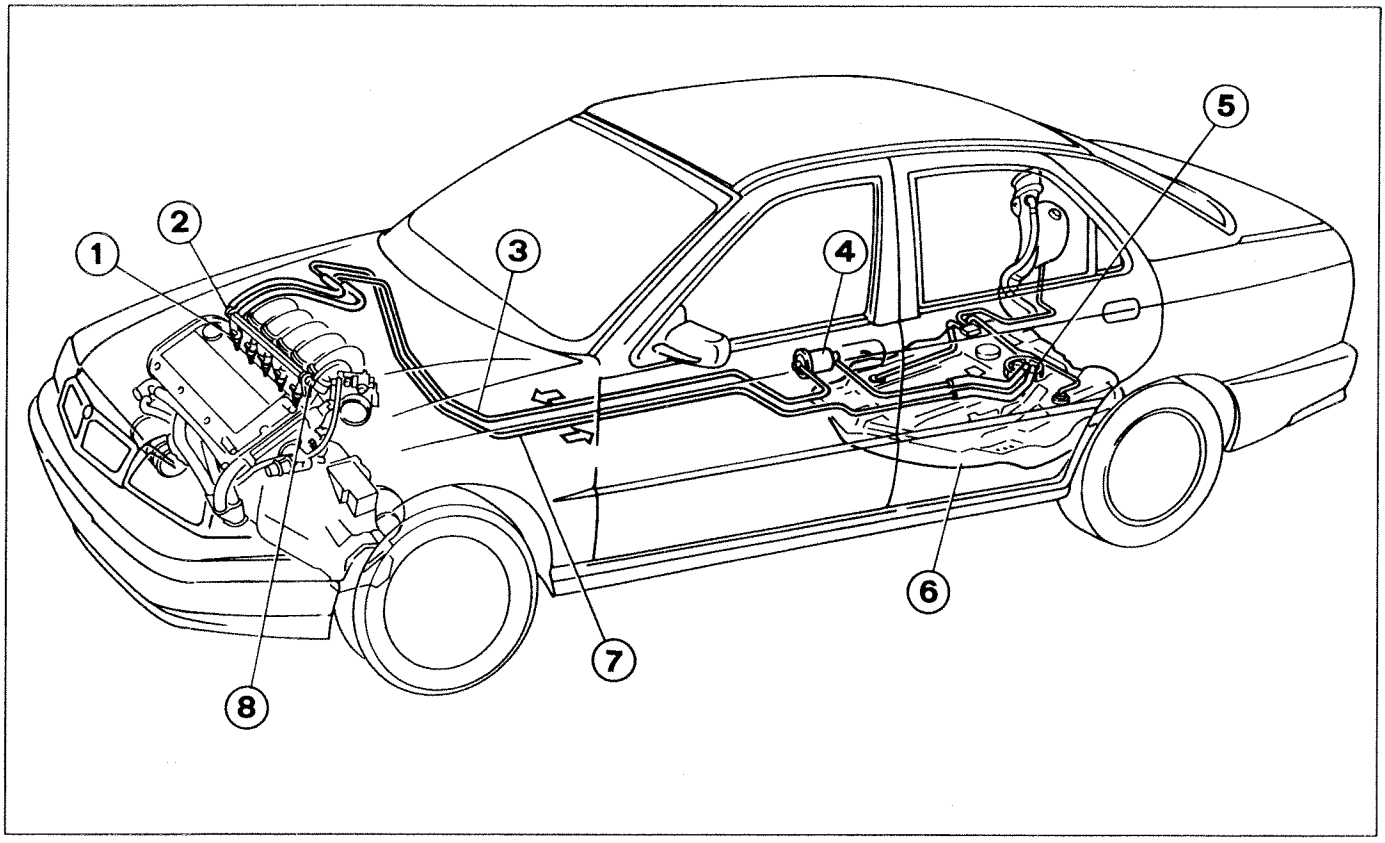

P3U09CX01

A pump submerged in the fuel tank takes up fuel and directs it to the filter and injectors.

Fuel delivery pressure to the injectors is maintained constant and proportional to pressure level in the intake manifold by the pressure regulator, which acts on fuel flow to maintain a constant pressure gap to the injectors.

Excess fuel is allowed to flow back, unpressurised, from pressure regulator to tank.

The main components of the fuel feed circuit are as follows:

1. Injectors
2. Fuel manifold
3. Delivery circuit
4. Fuel filter
5. Electric fuel pump
6. Tank
7. Return circuit
8. Pressure regulator

Copyright Fiat Auto

ELECTRIC PUMP

The submerged suction head fuel pump is located inside the pump, housed in a support on flexible mounts. The pump is chamber with roller type, operated by an electric motor with permanent magnet exitation, submerged in the fuel pump.
A disc rotor (1) located eccentrically in the pump case contains metal rollers (2) in chambers around its circumference. These are pushed against the outer race by centrifugal force in order to ensure a watertight seal.

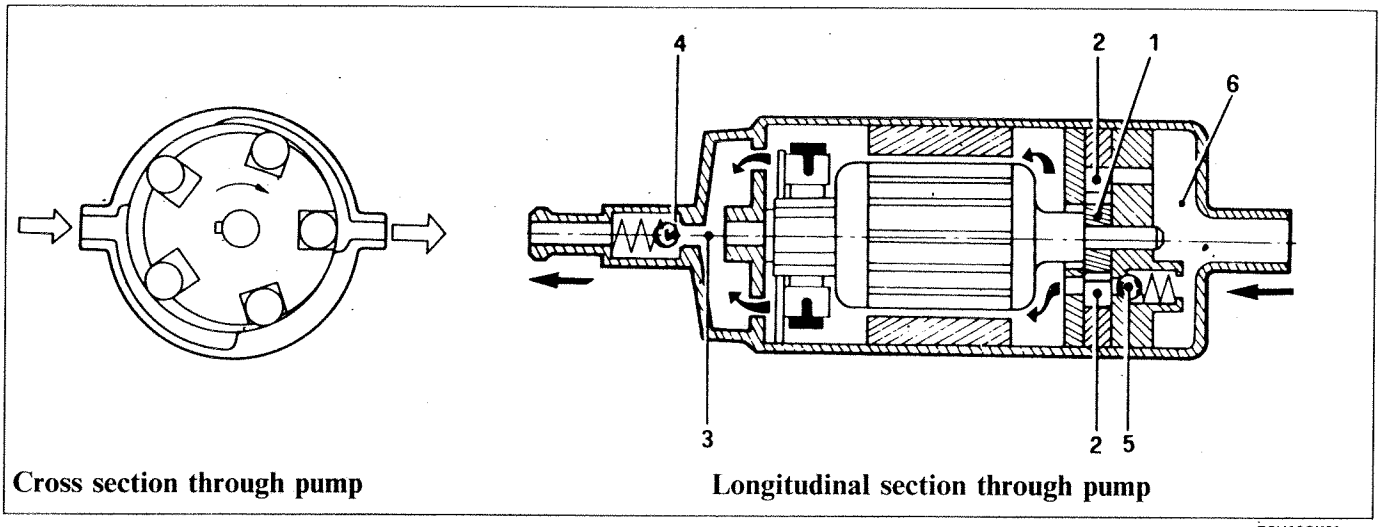

Cross section through pump **Longitudinal section through pump**

P3U10CX01

The fuel flows into the empty compartments and is compressed in outlet duct (3). Check valve (4) prevents the outlet pipe emptying with the engine off.
Pressure relief valve (5) short circuits the flow to intake chamber (6) when the pressure exceeds 7.5 bar.

The electrical pump begins to operate when the ignition switch is moved to AVV. Once start-up is over, the pump continues to operate with the igntion switch turned to MAR, unless engine speed drops below 225/min, or the ignition switch is turned back to STOP.

If the engine stops for any reason, with igntion switch in MAR position, pump operation stops automatically for safety reasons.

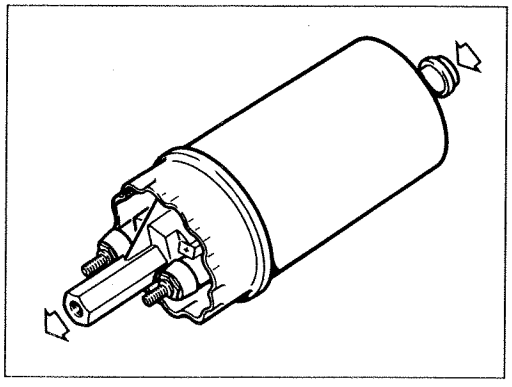

P3U10CX02

Longitudinal perspective section through fuel pump and external view

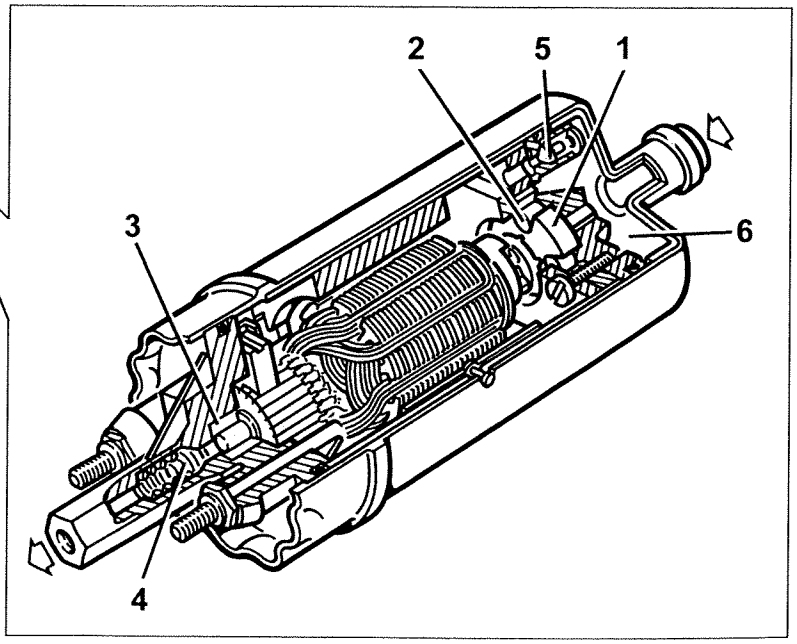

P3U10CX03

FUEL FILTER

The fuel filter is fitted under the floor pan.
It is paper type with high filter capacity, essential due to the sensitivity of the injectors to foreign bodies.

Longitudinal perspective section through fuel filter and external view

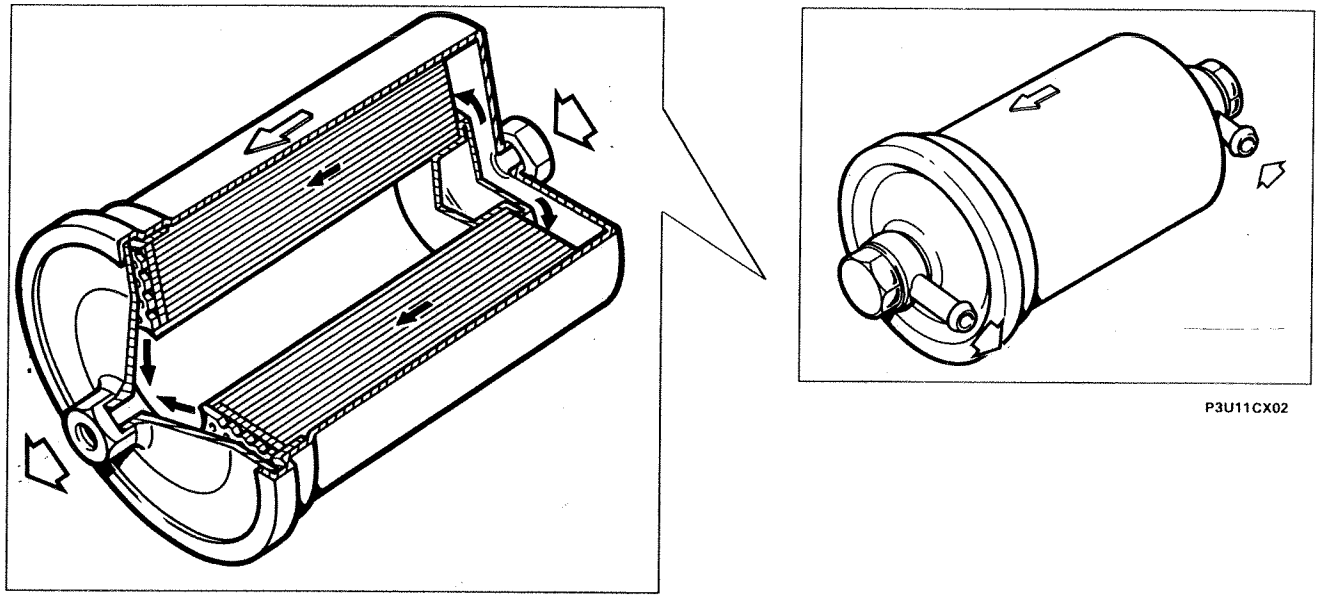

P3U11CX02

P3U11CX01

FUEL MANIFOLD TO INJECTORS AND PRESSURE REGULATOR

The fuel manifold distributes fuel to the injectors. It is made out of sheet steel and fitted with housings for injectors and pressure regulator, with fuel outlet and inlet fittings.

The fuel manifold is fastened to the intake manifold by means of four brackets.
The pressure regulator is necessary for maintaining a constant pressure gap to injectors.
It is a differential, diaphragm device and set to a pressure of about 3 bar during manufacture.

The pressure regulator consists of a metal case that contains a mobile unit made up of metal body (8) and membrane (4) loaded by spring (5). After overcoming a set force, made up of the vacuum on the other side of the membrane and load of spring (5), the fuel pushed by the pump opens valve (7) to allow excess fuel to flow through pipe (2) to the tank.

The spring housing chamber communicates with the engine intake duct (6) (vacuum signal). This feature maintains a constant difference between fuel pressure and intake manifold vacuum throughout all engine service conditions.

Copyright Fiat Auto

10.

Longitudinal section through fuel supply manifold and pressure regulator

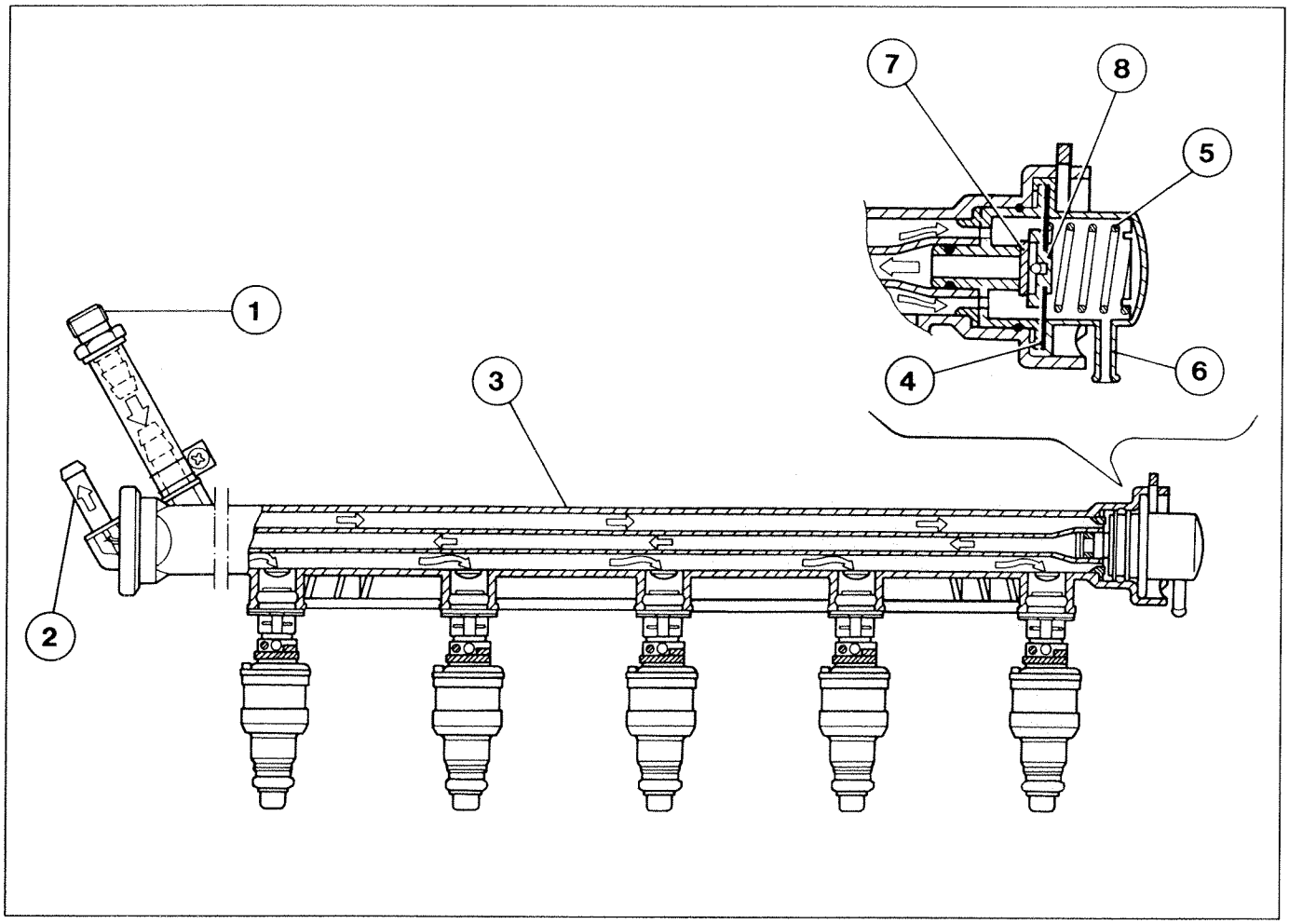

1. Fitting connected to fuel inlet line
2. Fitting connected to fuel return line
3. Injector and fuel manifold mount
4. Membrane with reflux valve
5. Regulating spring
6. Pipe connected to vacuum in intake manifold
7. Reflux valve
8. Metal case

INJECTORS

The twin jet injectors are fitted on the intake ducts, immediately before the intake valve.

These injectors are specific to 4 valve per cylinder engines because they allow sprays to be directed toward the two intake valves.
Fuel sprays emerge from the injector at a differential pressure of 3 bar and nebulise instantly to form two cones of about 10° each.
Fuel is injected into the intake duct of each cylinder upstream of the intake valve.

Injector control is «phased, sequential», i.e. the five injectors are controlled in the same order as the engine cylinder intake. The supply to each cylinder may begin at any time from the expansion stage to when intake has already begun.
The injectors are held in their seats by the fuel manifold. They are also secured to the fuel manifold by safety clips. Two o-rings (10) and (11) seal the intake duct and fuel manifold.

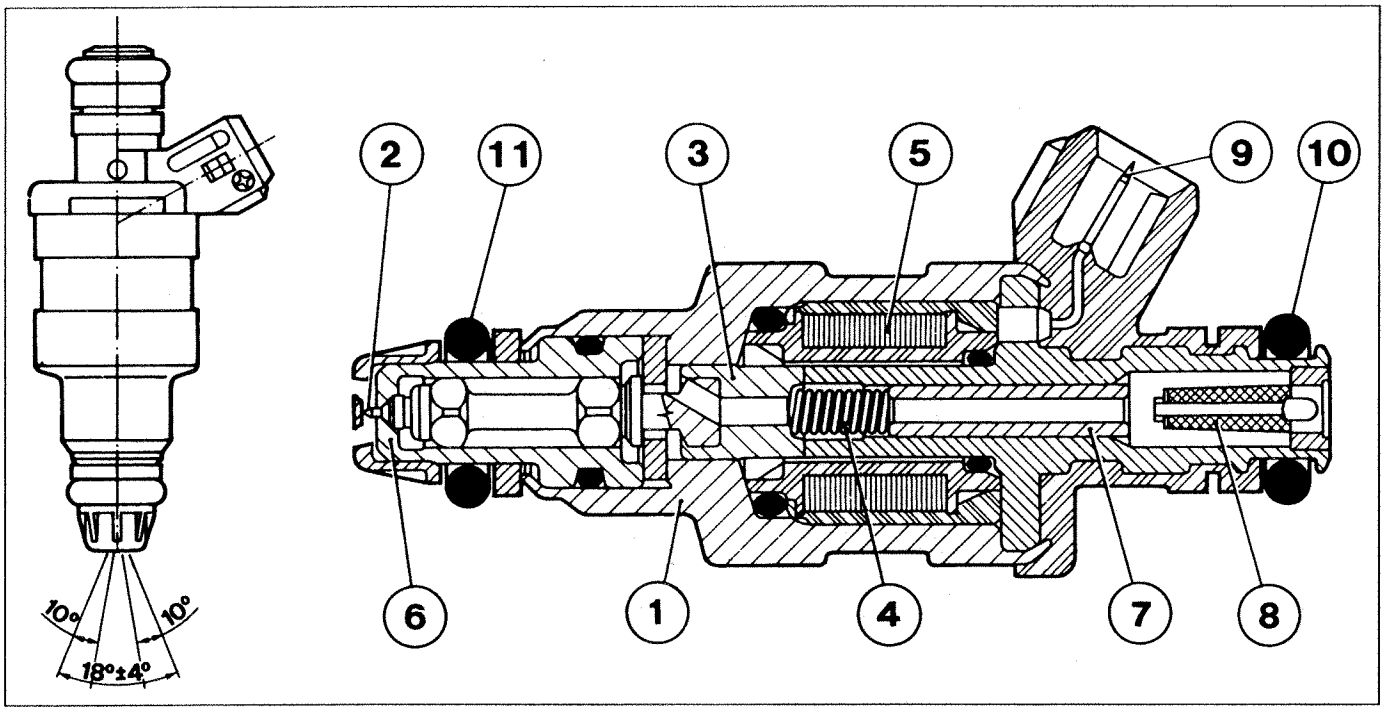

P3U13CX01

1. Injector case
2. Pintle
3. Magnetic core
4. Coil spring
5. Winding
6. Injector tip
7. Adjustable spring driver
8. Fuel filter
9. Electrical connection socket
10. Rubber fuel seal ring
11. Rubber vacuum seal ring

Electrical specifications

Supply voltage 6-16 Volt
Electrical resistance 16.2 Ω
Minimum activation time 2.5 msec at 14 V
Service temperature - 40 °C + 120 °C
Spray range 10°
Total angle covered by sprays 18° ± 4°

Copyright Fiat Auto

B. AIR INTAKE CIRCUIT

This consists of the following parts:

- Throttle case;
- Engine idle speed actuator;
- Throttle valve position sensor
- Air temperature sensor
- Air flow meter (debimeter)

AIR INTAKE CIRCUIT DIAGRAM

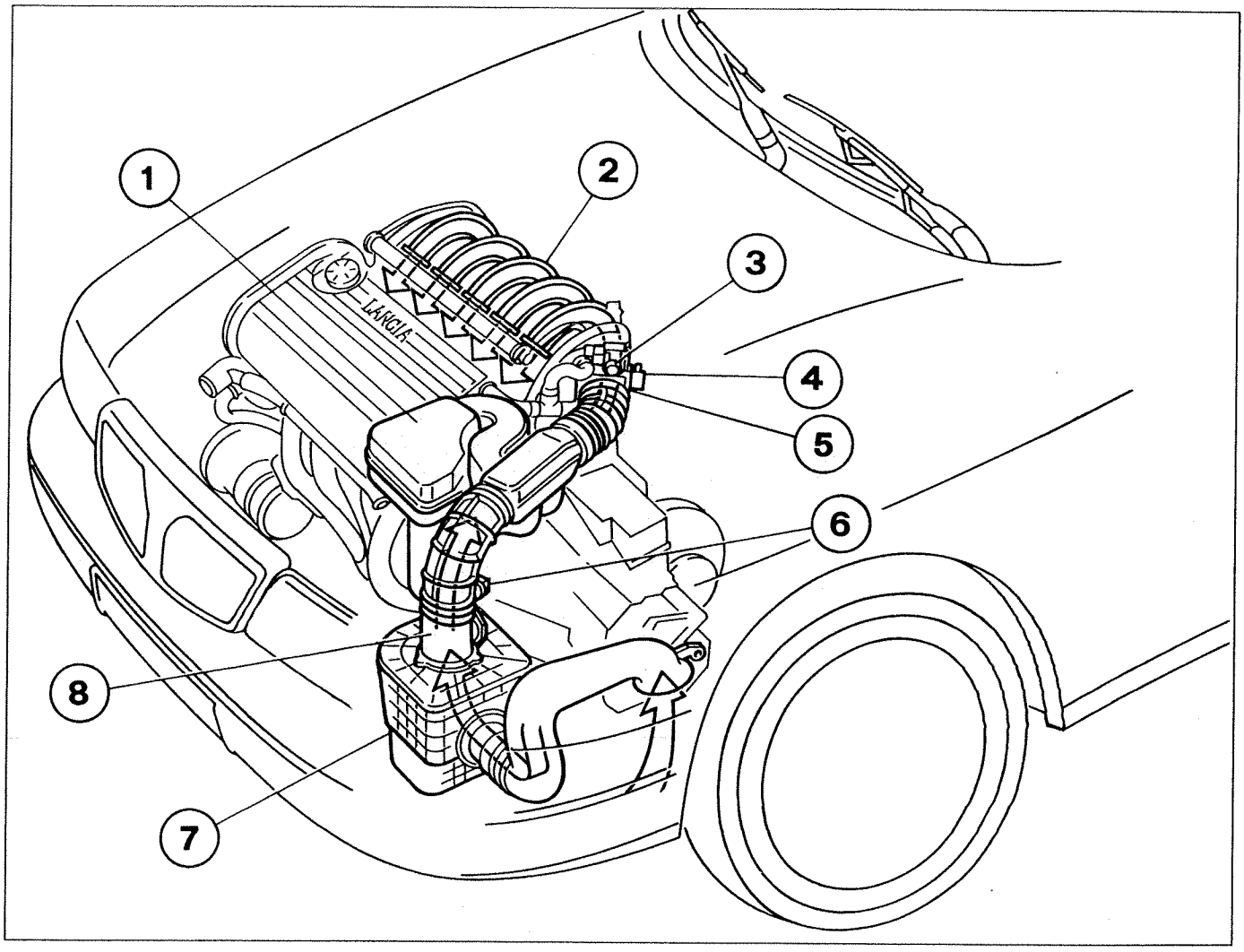

P3U14CX01

1. Resonator
2. Intake manifolds
3. Engine idle speed actuator
4. Throttle position sensor
5. Throttle case
6. Air temperature sensor
7. Filter case
8. Hot film debimeter

THROTTLE CASE

The amount of air taken in is determined by the opening of a throttle at the beginning of the intake manifold. The throttle is controlled by the accelerator pedal. Air necessary to keep the engine idling (with throttle closed) and appliances activated is regulated and by-passed solely by the engine idle speed actuator.

The arrowed screw is used to adjust throttle closure correctly in order to prevent fouling against the surrounding circuit; this screw should not be used to adjust idle because it is set by flushing during manufacture and must never be tampered with.

Coolant flows from thermostat through inlet and outlet ports (3) and (5) within butterfly valve area to prevent condensation and formation of ice that could occur under certain conditions with low outdoor temperature and/or high humidity.

Gases leaking from the crankcase enter the intake manifold downstream of the throttle through PCV valve (4).

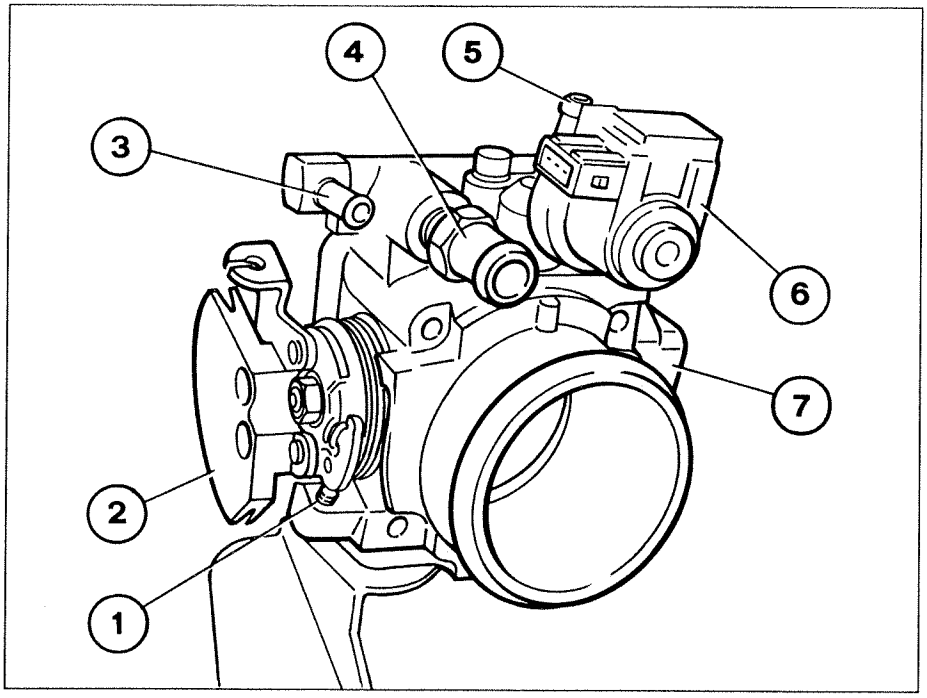

P3U15CX01

1. Butterfly valve adjustment and antibind screw **(do not touch)**
2. Throttle linkage
3. Attachment for coolant delivery line
4. Attachment for crankcase vapour recycling and recovery line
5. Attachment for coolant return line
6. Engine idle speed actuator
7. Throttle position sensor

Copyright Fiat Auto

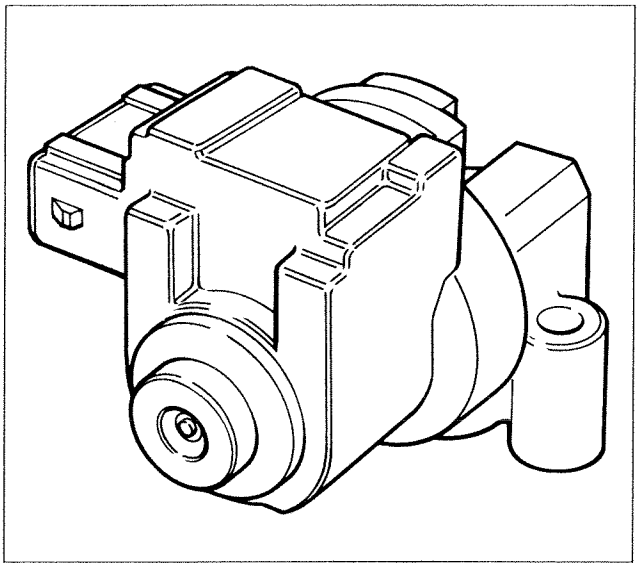

P3U16CX01

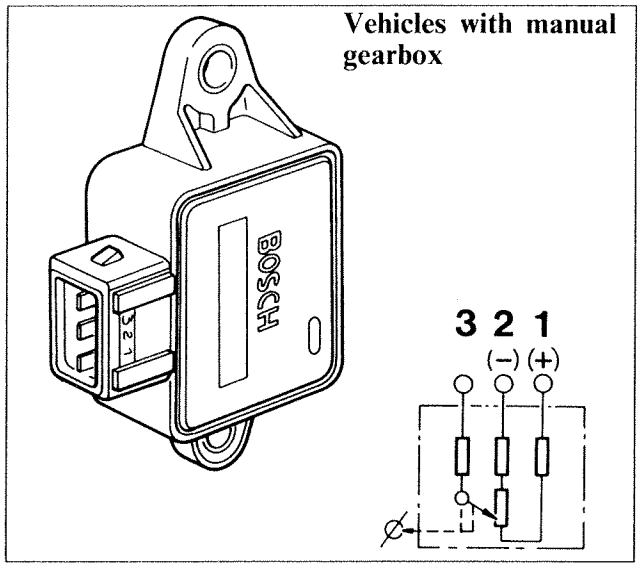

P3U16CX02

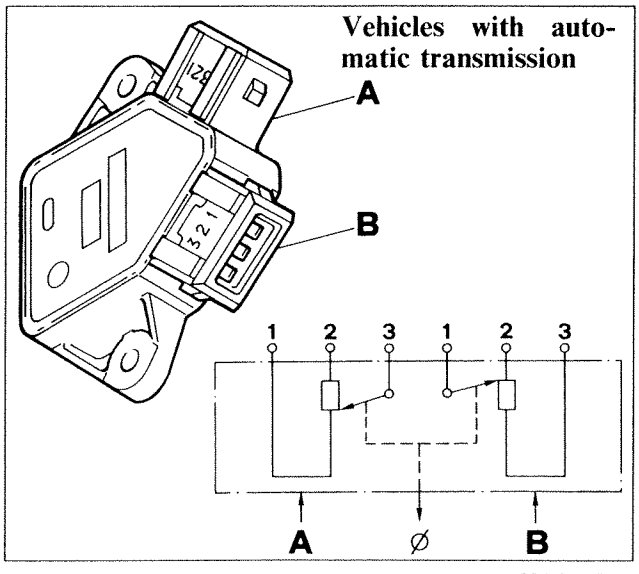

P3U16CX03

ENGINE IDLE SPEED ACTUATOR

This consists of an electric motor. By opening supplementary air passage - in parallel with leakage flow from throttle (with accelerator released) - in the throttle case by varying amounts, this keeps engine idle speed constant automatically regardless of engine load (supplementary appliances on or off, engine warm or cold etc.).

The passage opening brought about by distributor rotation is governed by electrical pulses processed by a special section of the injection ECU, which turns the distributor one way or another according to engine speed.

THROTTLE VALVE POSITION SENSOR

This takes the form of a potentiometer with its mobile part controlled directly by the butterfly valve spindle.
During operation, the injection-ignition control unit supplies the potentiometer at a voltage of 5 volts, applied to pins (1) and (2).
Pin 3 receives a voltage inversely proportional to butterfly valve opening. According to voltage sent by pin 3, the ECU identifies butterfly valve position and corrects mixture concentration accordingly.

With throttle closed, an electrical signal of about 0.5 Volt reaches the ECU, which identifies idle and cut-off conditions (on the basis of engine rpm).

The potentiometer automatically recognises the throttle fully closed position through its self-adaptive function. This does away with the need for potentiometer adjustment and takes into account the effect of wear on the throttle closure position.

On versions with automatic transmissions, the sensor consists of two potentiometers, each with its own connector. Potentiometer A is connected to the injection-ignition ECU as described previously for versions with manual transmission.
Potentiometer B is connected to the automatic transmission (a.t.) ECU. During operation, the a.t. ECU supplies potentiometer B at a voltage of 5 Volt applied to pins 2 and 3. Pin 1 receives a voltage directly proportional to butterfly valve opening angle.

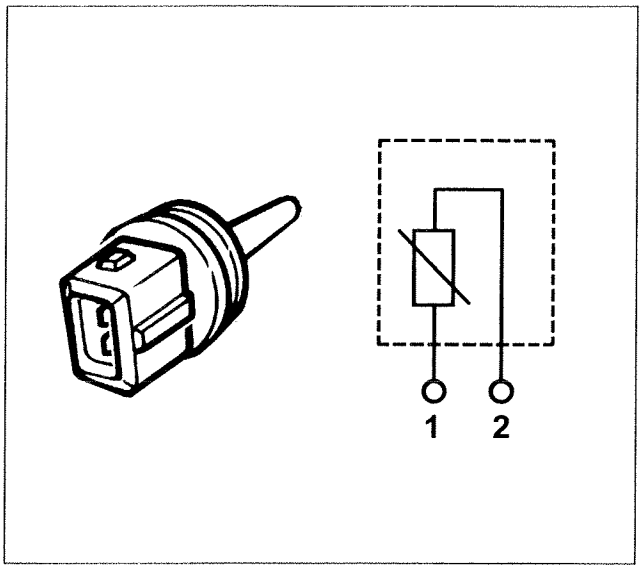

P3U12BX01

AIR TEMPERATURE SENSOR

The intake air temperature sensor is separate from the air flow meter on this version. It is a normal negative temperature coefficient (NTC) sensor with resistance level inversely proportional to air temperature.

Because the ECU intake circuit is designed as a voltage divider, voltage is divided between a resistance in the ECU and sensor NTC resistance. The ECU is thus able to assess sensor resistance changes through voltage changes and obtain temperature data in this way.

DEBIMETER

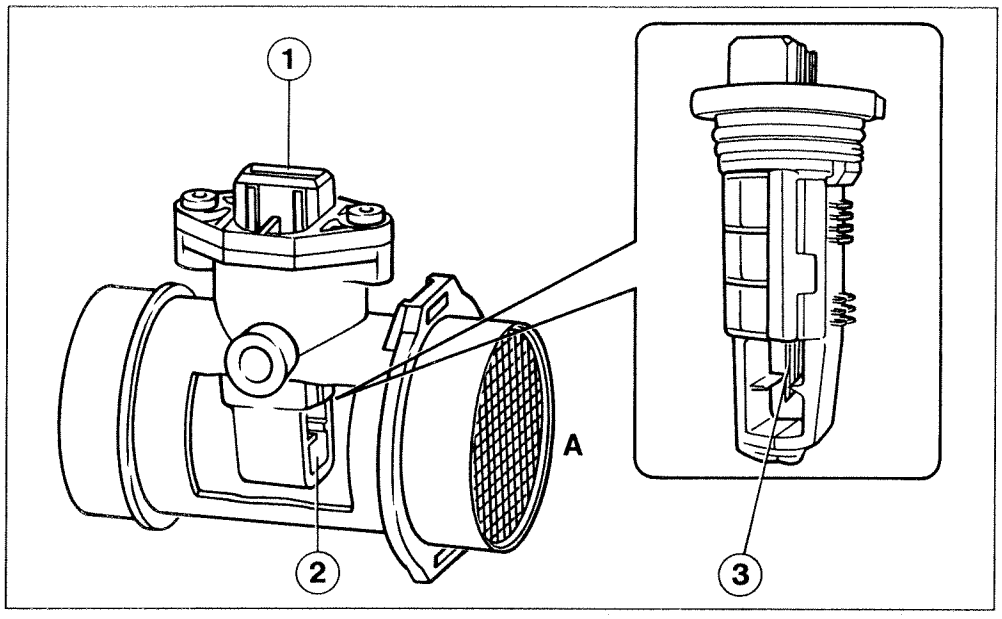

P3U17CX01

1. Connector
2. Measuring channel
3. Hot film sensor

A = Air intake

The air flow meter is of the new hot film type. In this system, a heated film is placed in a measuring channel through which flows air from the engine air intake.

The film is maintained at a constant temperature (~ 120 °C) by an adjacent heating coil.

The mass of air flowing through the measuring channel tends to remove heat from the film. In order to keep the film at a constant temperature, a given current must flow through the heating coil. This current is measured using a Wheatstone bridge

The measured current is therefore proportional to the flowing air mass.

Copyright Fiat Auto

C. ELECTRIC/ELECTRONIC CIRCUIT

Connects all Bosch Motronic M 2.10 injection/ignition system components and provides them with electricity.
It consists mainly of an **electronic control unit** (ECU) and the following parts:
- Three main control relays
- Two protection fuses (electric fuel pump and lambda probe)
- Throttle valve position sensor
- Coolant temperature sensor
- Fuel pump submerged in tank
- Five injectors
- Intake air flow meter (debimeter)
- Inlet air temperature sensor
- Engine idle speed actuator
- Rpm sensor
- Timing sensor (cam angle)
- Two knock sensors
- Five single coils and respective spark plugs
- Speedometer sensor
- Lambda probe

Injection-ignition ECU (control unit)

The Bosch Motronic M 2.10 injection-ignition system fitted is specific to this version.

It consists of hybrid thick film circuits and is connected to the electrical wiring by means of a multiple **55 way** (or pole) connector.
These receive data on all engine service conditions from the various sensors:

- intake air quantity
- inlet air temperature
- coolant temperature
- engine rpm
- cam angle
- throttle valve position
- vehicle speed signal
- knock sensor
- lambda signal

The ECU is able to achieve the following objectives through the use of the above data and with the aid of typical programs written into its permanent memory:

1. Manage injection frequency and time; in other words, supply a calculated amount of fuel to each cylinder by means of a sequential, phased command (1-2-4-5-3).
   In practice, the air/fuel ratio must always be within optimal limits. These are defined during engine set-up with the aim of limiting fuel consumption, reducing harmful exhaust emissions and optimising engine thermodynamic efficiency.
2. Control ignition point electronically (ignition advance)
3. Control air flow at given rpm through a specific sensor in order to allow engine to run evenly even when environmental conditions and applied loads vary.
4. Run special programs to record operating defects in sensors recorded in RAM memory and replace incorrect data or data not received with replacement values to ensure engine operation even under emergency conditions (RECOVERY).
5. Provide data on operating defects recorded and saved through a serial line to a Fiat/Lancia tester (tester point).

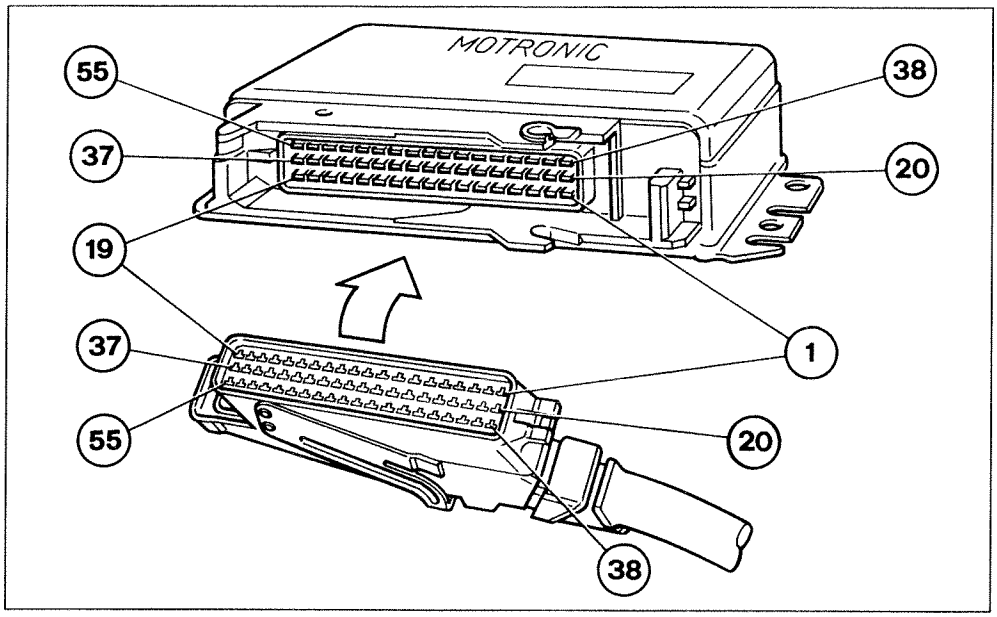

P3U19CX01

Identifying connections on control unit

1. Cylinder 1 ignition control
2. Earth on engine
3. Fuel pump relay and lambda probe enablement
4. Engine idle speed actuator
5. Fuel vapour cut-off solenoid
6. Engine rpm signal output (rpm control)
7. Air flow meter signal
8. Timing sensor signal
9. Vehicle speed signal input
10. Lambda probe earth
11. Knock sensor signal
12. Timing sensor and butterfly valve potentiometer supply
13. Not connected
14. Earth on engine
15. Cylinder 5 injector control
16. Cylinder 2 injector control
17. Cylinder 1 injector control
18. Direct battery supply (+30)
19. Earth on engine
20. Cylinder 2 ignition control
21. Cylinder 3 ignition control
22. Engine idle speed actuator
23. Not connected
24. Earth on engine
25. Not connected
26. Air flow meter earth
27. Locked power source (+15)
28. Lambda probe signal
29. Knock sensor signal
30. Sensor supply: air temperature, coolant temperature, knock andthrottle valve position
31. Not connected
32. a/c compressor relay signal output
33. Not connected
34. Cylinder 4 injector control
35. Cylinder 3 injector control
36. System supply relay enablement
37. Positive (+30) from system relay
38. Cylinder 4 ignition control
39. Cylinder 5 ignition control
40. A/c signal input
41. A/c signal input
42. Earth on engine (speed engaged signal input for automatic transmission)
43. Not connected (speed engaged identification signal output for automatic transmission)
44. Not connected
45. Coolant temperature sending unit signal
46. Not connected
47. Not connected
48. Rpm sensor
49. Rpm sensor
50. Not connected
51. System failure indicator
52. Timing variator solenoid relay enablement
53. Butterfly valve position sensor
54. Coolant temperature sending unit signal
55. Two-way line with immobiliser ECU (fault diagnosis line K)

Copyright Fiat Auto

ELECTRICAL CONNECTIONS BETWEEN ECU/SENSORS AND ACTUATORS

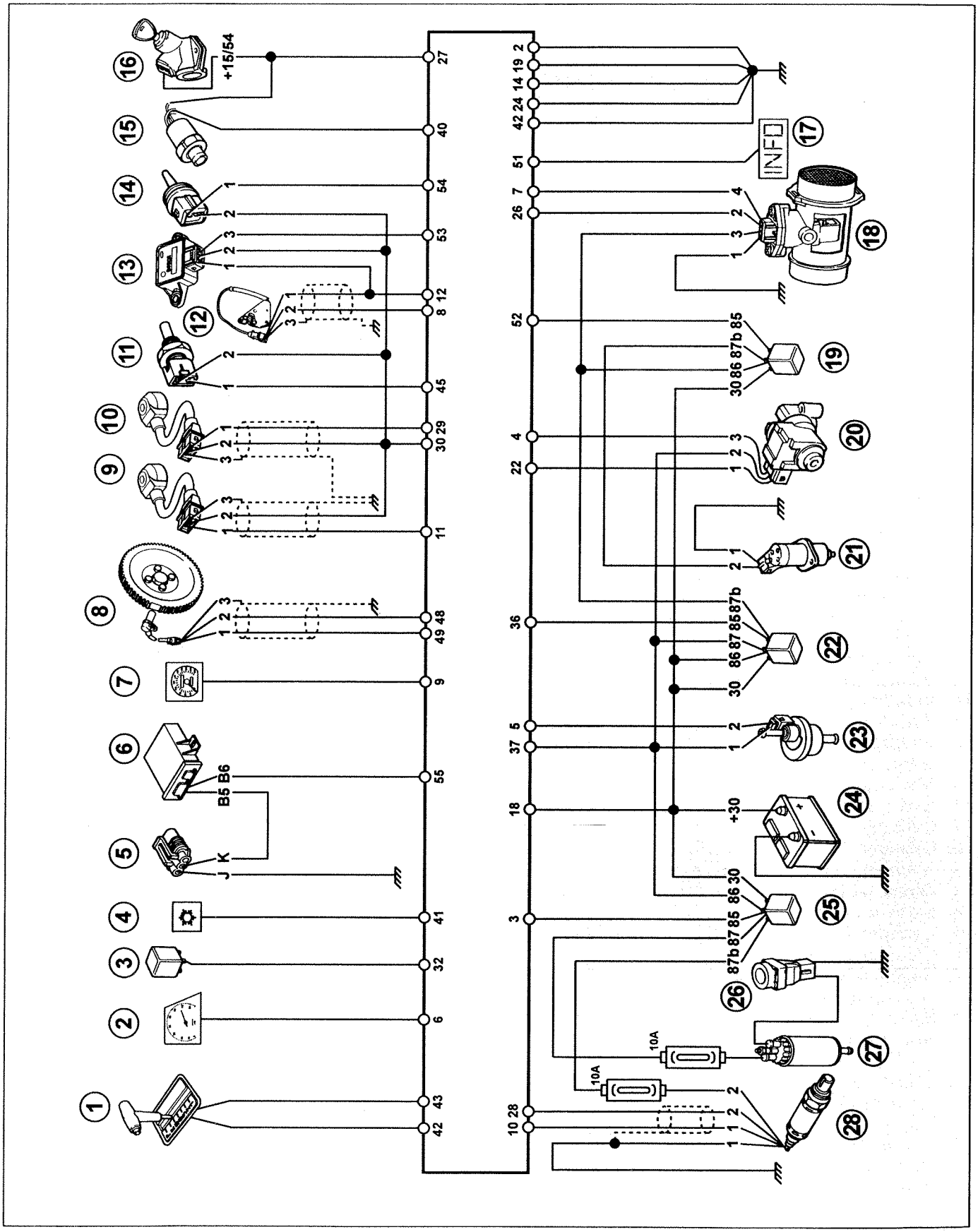

P3U20CX01

CONNECTIONS BETWEEN ECU/IGNITION COILS AND INJECTORS

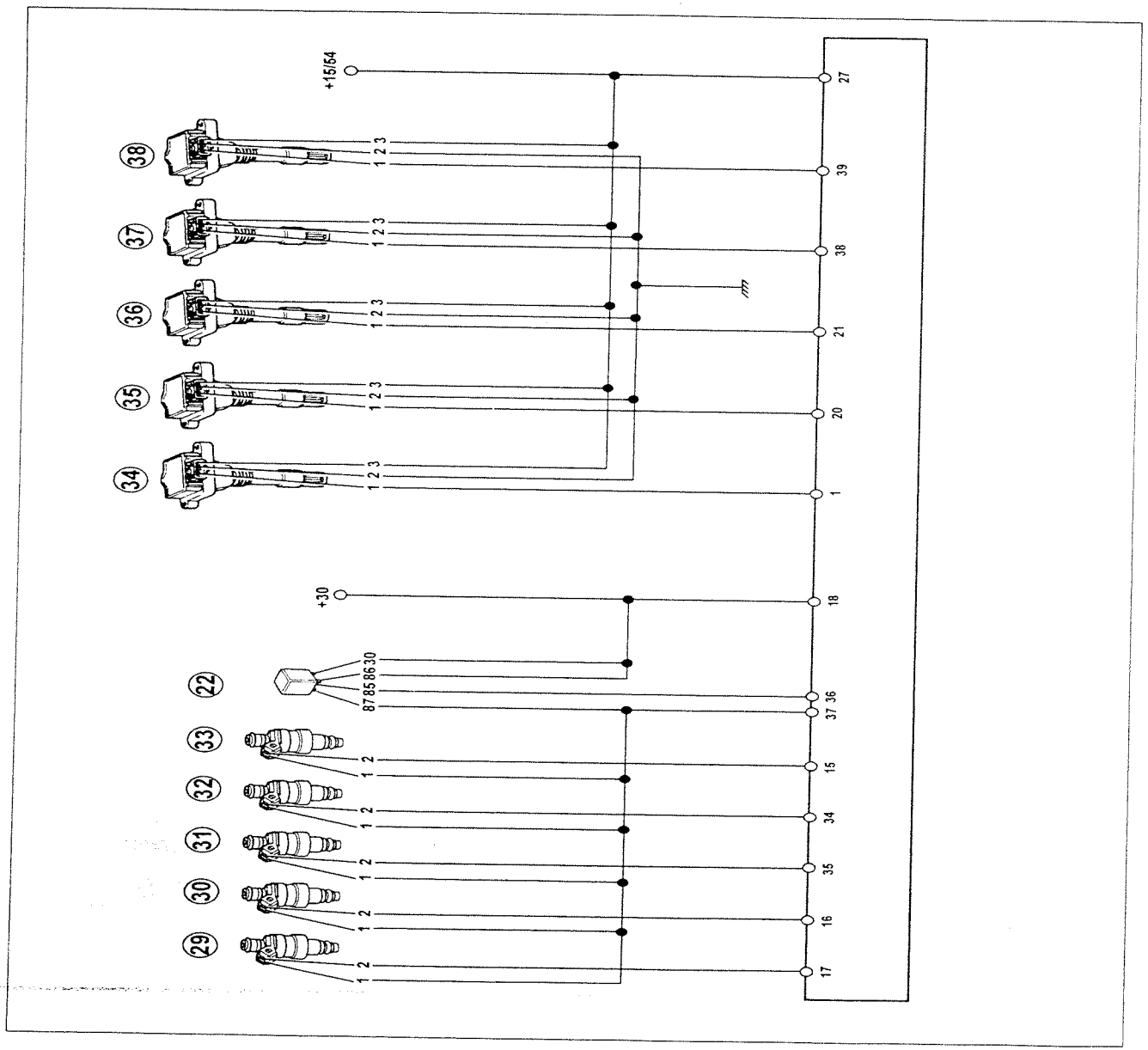

P3U21CX01

ECU wiring diagram

Key:

1. Automatic transmission
2. Rev counter signal
3. Air conditioner relay
4. Air conditioner control button
5. Fiat/Lancia Tester fault diagnosis point
6. Immobiliser control unit
7. Speedometer signal
8. Rpm and TDC sensor
9. Knock sensor 1
10. Knock sensor 2
11. Water temperature sensor
12. Timing sensor
13. Throttle position sensor
14. Intake air temperature sensor
15. Three stage pressure switch
16. Ignition switch
17. Infocenter
18. Debimeter
19. Timing variator solenoid relay
20. Engine idle speed actuator
21. Timing variator control solenoid
22. I.e. system supply relay.
23. Fuel vapour solenoid
24. Battery
25. Fuel pump contactor and lambda probe
26. Inertia switch
27. Electric fuel pump
28. Lambda probe
29. Cylinder no. 1 injector
30. Cylinder no. 2 injector
31. Cylinder no. 3 injector
32. Cylinder no. 4 injector
33. Cylinder no. 5 injector
34. Cylinder no. 1 ignition coil
35. Cylinder no. 2 ignition coil
36. Cylinder no. 3 ignition coil
37. Cylinder no. 4 ignition coil
38. Cylinder no. 5 ignition coil

Copyright Fiat Auto

LOCATION OF COMPONENTS IN ENGINE BAY

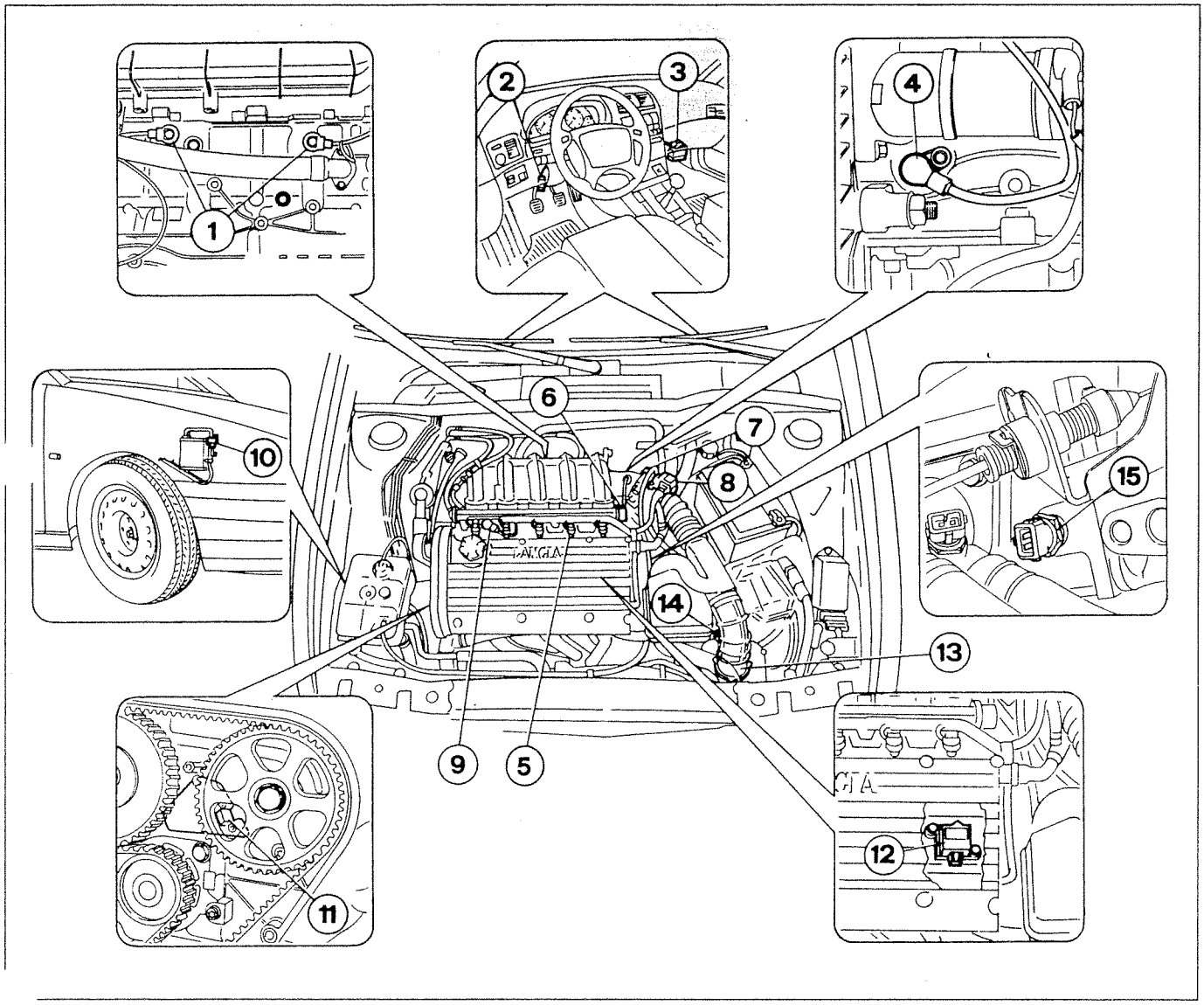

P3U22CX01

Key:

1. Knock sensors
2. Diagnostic socket
3. Injection-ignition ECU
4. Rpm and TDC sensor
5. Injectors
6. Fuel pressure regulator
7. Throttle position sensor
8. Engine idle speed actuator
9. Timing variator control solenoid
10. Fuel vapour solenoid
11. Timing sensor
12. Single coils
13. Air flow meter (debimeter)
14. Intake air temperature sensor
15. Coolant temperature sensor

DIAGRAM SHOWING ECU DATA INPUT AND OUTPUT

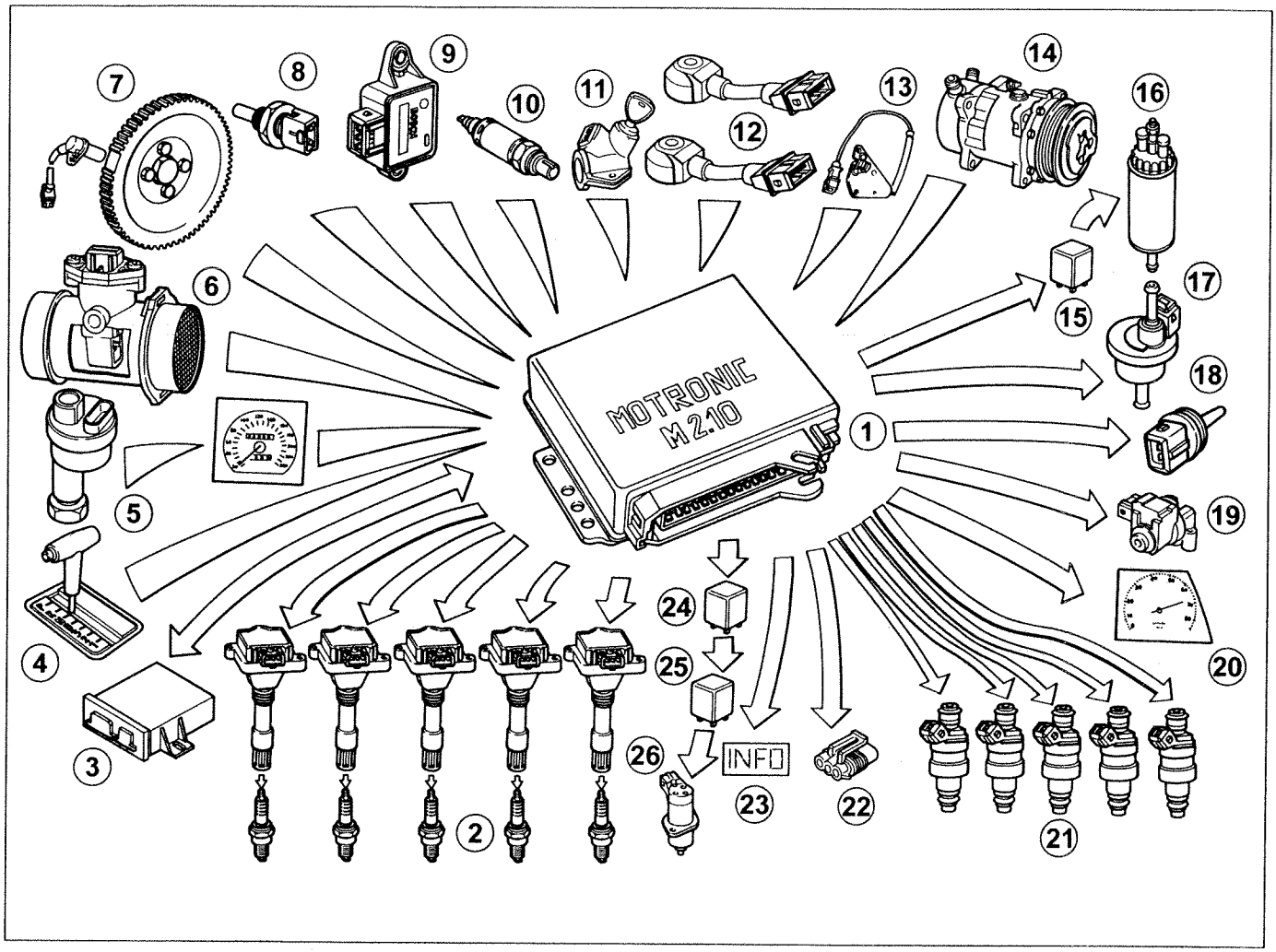

P3U23CX01

System components:

1. Electronic control unit
2. Coils and spark plugs
3. Immobiliser
4. Automatic transmission
5. Speedometer sensor
6. Debimeter
7. Rpm sensor
8. Water temperature sensor
9. Throttle potentiometer
10. Lambda probe
11. Ignition switch
12. Knock sensors
13. Timing sensor
14. Air conditioner compressor
15. Fuel pump contactor
16. Electric fuel pump
17. Fuel vapour intake solenoid
18. Air temperature sensor
19. Engine idle speed actuator
20. Rev counter signal
21. Injectors
22. Diagnostic socket
23. Infocenter
24. I.e. system relay.
25. Timing variator solenoid relay
26. Timing variator control solenoid

Copyright Fiat Auto

SINGLE COIL

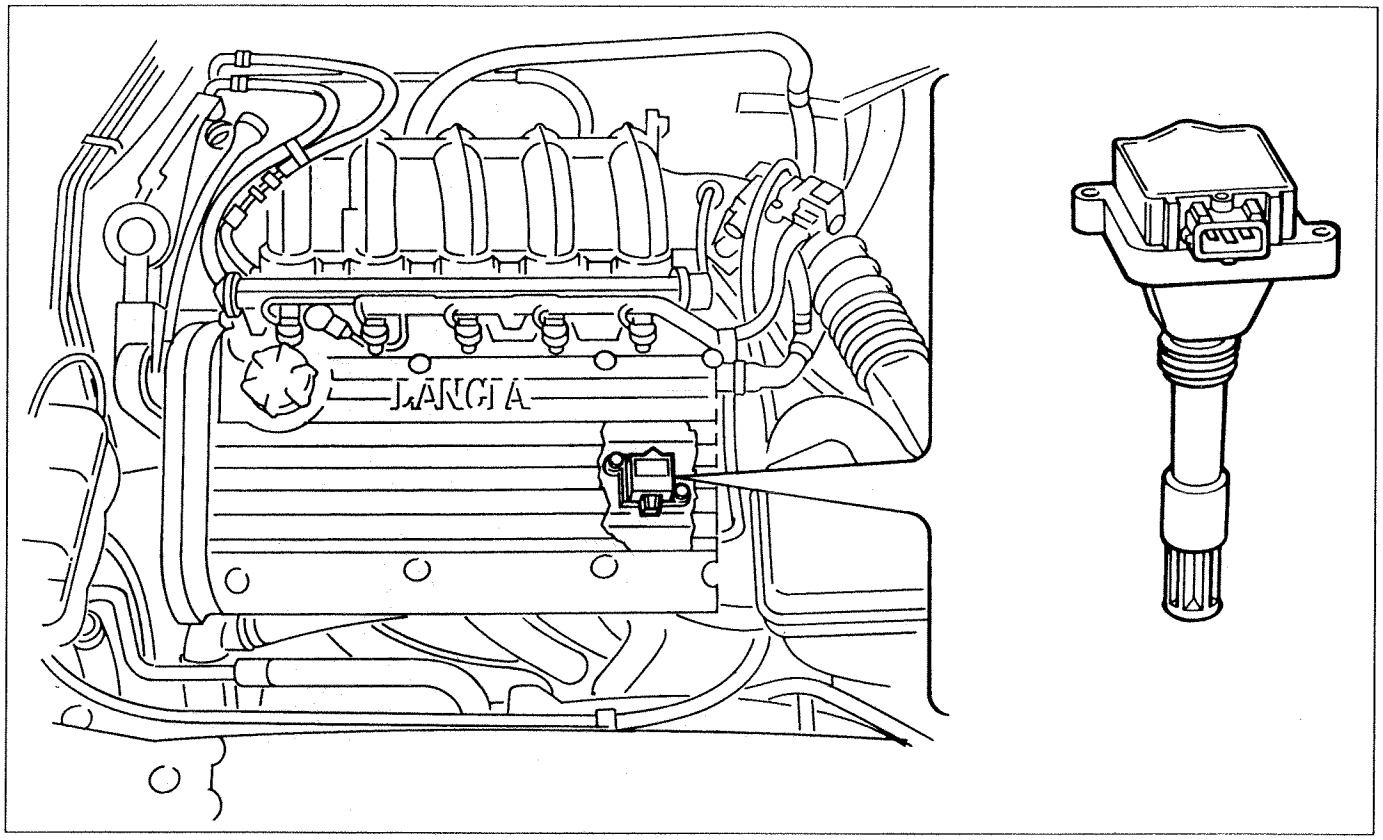

P3U24CX01

The static electronic ignition has been improved by adding a single coil for each spark plug. The power modules are also contained inside the ECU. This solution practically does away with the H.T. circuit and thus further increases reliability and safety while reducing the risk of fouling by high tension leads and connections.
In this system, one normal coil raises the voltage of the pulse directed to the spark plugs. Each individual coil, connected to the cylinder head, supplies a spark plug directly without intervening H.T. leads.
The coil wiring diagram is shown in the diagram.

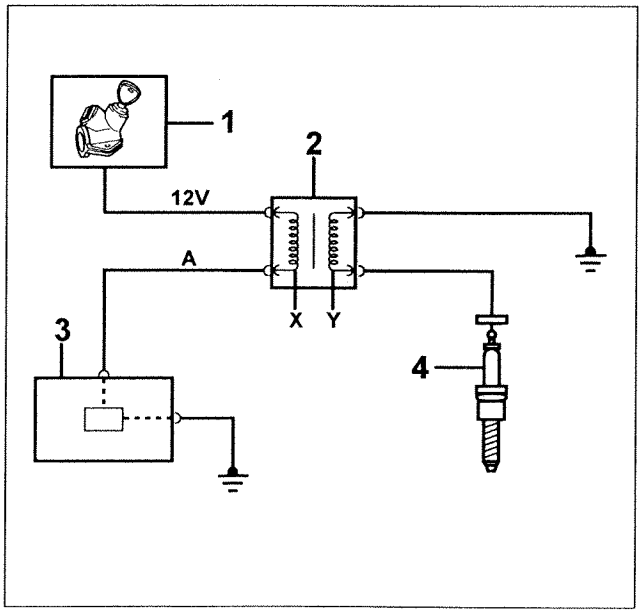

P3U24CX02

Electrical specifications

Primary winding inductance	3 mH
Primary winding resistance	0.4 Ω
Secondary winding resistance	8.5 KΩ
Anti-interference resistance	1 KΩ

A. Control signal
X. Primary winding
Y. Secondary winding
1. Power from ignition switch

2. Single coil
3. Electronic control unit
4. Spark plug

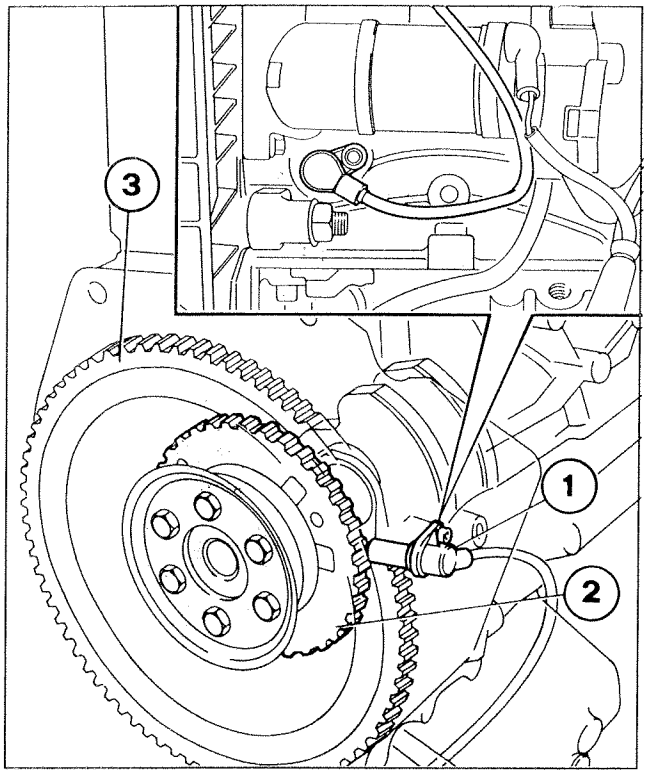

P3U25CW01

RPM AND TDC SENSOR

The sensor used for measuring rpm and TDC is inductive. In other words, it works by altering the magnetic field generated by teeth passing in front of a toothed pulley (phonic wheel) fitted insde the crankshaft and fastened to the rear crankshaft counterweight. The sensor is now fastened to the crankcase and gap and angular position need no longer be adjusted.
The teeth passing in front of the sensor alter the gap between pulley and sensor. The dispersed flow thus alters to set up an alternating voltage with amplitude dependent on rpm.
The phonic wheel consists of 58 teeth plus a gap equivalent to two missing teeth.
The reference marked by the gap left by the two missing teeth is used as a base for measuring synchronism point (TDC).

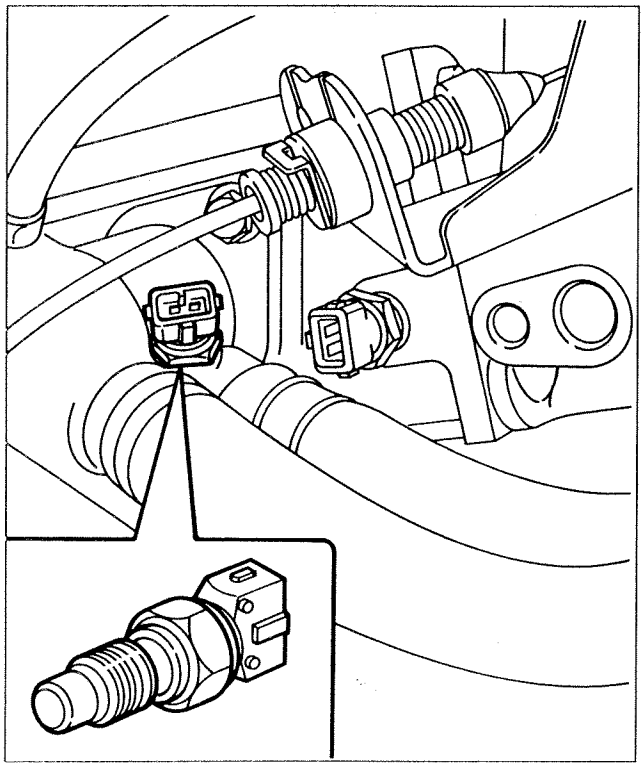

P3U25CX02

COOLANT TEMPERATURE SENSOR

The sensor is fitted near the thermostat case with its sensitive part in contact with the coolant. It consists of a brass case that serves to protect the resistant element, which is an NTC (negative temperature coefficient) «thermistor». The sensor electrical resistance drops as temperature increases.
The voltage it supplies to the ECU varies according to engine temperature in order to correct air flow meter data. According to the signal received from the sensor, the ECU can therefore increase fuel injection time to provide the necessary enrichment and make up for fuel loss due to condensation of fuel particles on intake ducts when the engine is not running at service temperature.
This sensor therefore safeguards engine operation during the stage subsequent to start-up by adding a further period of enrichment with intensity and duration dependent on coolant temperature. It also permits efficient engine operation during acceleration with engine cold.

Copyright Fiat Auto

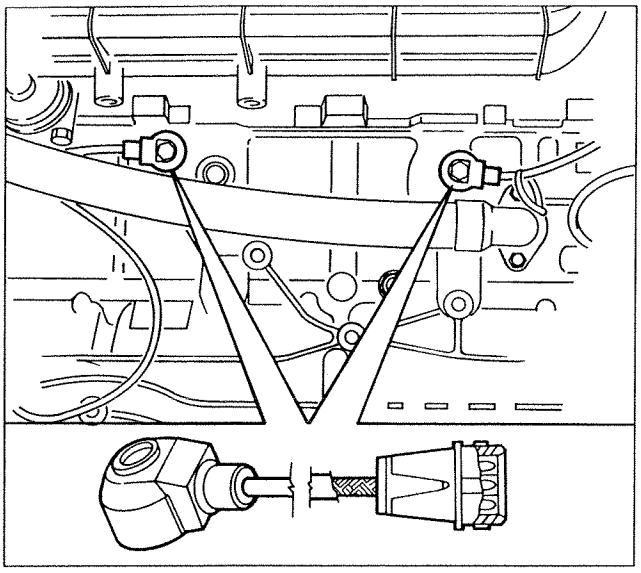

P3U26CX01

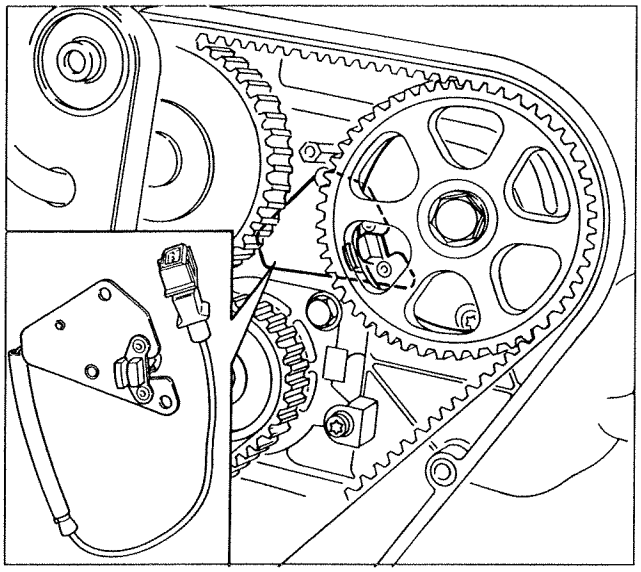

P3U26CW01

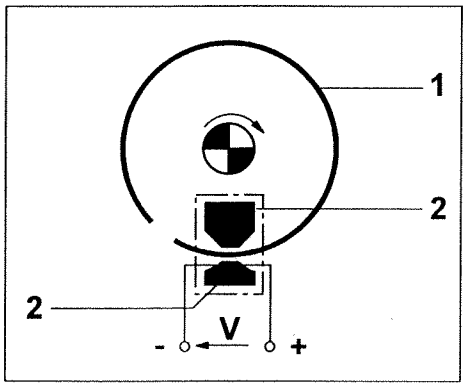

P3U26CX04

1. Deflector (pulley ring)
2. Magnetic material

KNOCK SENSORS (KNOCK)

The knock sensors are located on the engine block beneath the intake manifolds - between cylinders 1-2 and 4-5 respectively.
A through bushing prevents these sensors being tightened to an incorrect torque. **When replacing, do not fit shims or washers between crankcase and sensor mating surfaces.**
Vibrations of a given frequency are set up in the crankcase when engine knock occurs.
The knock gives rise to mechanical effects on a piezoelectric crystal, which sends a signal to the ECU. An ignition delay strategy is then implemented on the basis of this signal.

INJECTION TIMING SENSOR (CAM ANGLE)

The Bosch Motronic M 2.10 adopts a sequential, phased injection system. In other words, fuel injection occurs in sequence for each cylinder in intake phase.
To achieve this, the ECU uses a timing signal in addition to the rpm and TDC signal in order to determine injection point.
The signal sent to the ECU is generated by a Hall-effect sensor fitted near the camshaft drive pulley, exhaust end.

Principle of operation

A semi-conducting layer with current flowing through it is placed in a normal magnetic field (force lines at right angles to current direction). A potential difference known as a HALL voltage is set up at its terminals.
If current intensity remains constant, the voltage generated depends only on magnetic field intensity. Magnetic field intensity only needs to alter at intervals to obtain a modulated electrical signal with frequency proportional to speed with which magnetic field changes.
To obtain this change, the sensor is crossed by a metal ring (internal part of pulley) with an opening. The moving metal part of the ring covers the sensor and blocks the magnetic field to produce a low output signal. The sensor generates a high signal when aligned with the opening, i.e. with magnetic field present.

A high signal therefore alternates with a low signal once every two engine revolutions and specifically when cylinder no. 1 is 58° before TDC.
Together with the rpm and TDC signal, this signal allows the ECU to recognise the cylinders and determine injection point.

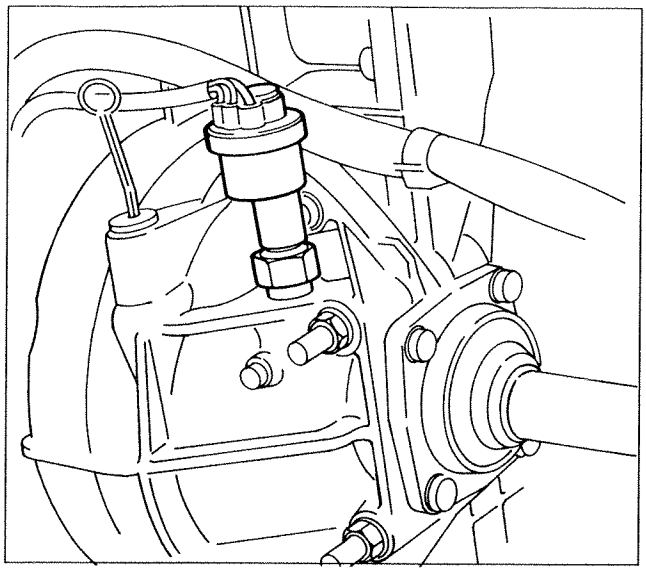

P3U26CX03

SPEEDOMETER SENSOR

The speedometer sensor (vehicle speed sensor) consists of a Hall effect sensor fitted to the differential outlet.
The sensor transmits a signal with frequency varying according to vehicle speed to the ECU.

The ECU uses this information to control idle adjustment actuator more effectively.

TIMING VARIATOR

A timing variator (electronic control and hydraulic activation) is adopted on the intake camshaft to achieve an effective compromise between high performance (i.e. power at high speeds) and good torque at low speeds.
This device allows the timing graph (intake stage) to be altered according to engine load requirement. This parameter is processed by the MOTRONIC control unit on the basis of electronic signals received by the air flow meter and rpm sensor, and sent as a command to the timing variator control solenoid.

The device consists of a main assembly fitted to the intake camshaft. It alters the angular position of the camshaft in relation to the drive pulley.
An activation valve is also present; driven by a solenoid. Both are fitted on the intake manifold and connected hydraulically to the main assembly by means of ducts.
The principle of operation is as follows:

- when engine load is below a set level, solenoid (1) is not activated and box of valve (2) pushed by counter spring (3) stays up so that oil from duct (A) cannot reach variator.

  In this case, intake valve timing remains unaltered.

  If engine load exceeds a set level, solenoid (1) is excited and box of valve (2) is pushed downward. In this position, oil from duct (A) enters chamber (B) of piston and then flows on to inner channel (C) through a hole.

  Oil may emerge from this channel only through an upper hole (communicating with variator inlet duct (D). Because valve box (2) is lowered, the lower hole does not communicate with inlet duct (E).

  Oil flows through ducts (D) and (F) to chamber (G) where it moves piston (4) to one side. The piston is forced to turn clockwise (viewed from camshaft end) as a result of the axial movement because it is driven by helical teeth on the outside.

  Rotation is transmitted by a spur-toothed splined sector to pinion (5), which is screwed onto threaded shank of camshaft (6). The pinion transmits rotation to the shaft, thus altering intake valve timing by 9°.

Copyright Fiat Auto

10.

When the solenoid is deactivated, the box of valve (2) returns to its original position to cut off the flow of oil under pressure to chamber (G), but allowing oil to return to exhaust under action of counter spring (7).

An extra channel ensures lubrication of camshaft journal even when device is not active.

Oil leaking back into chamber (H) of the solenoid drains out through duct (E).

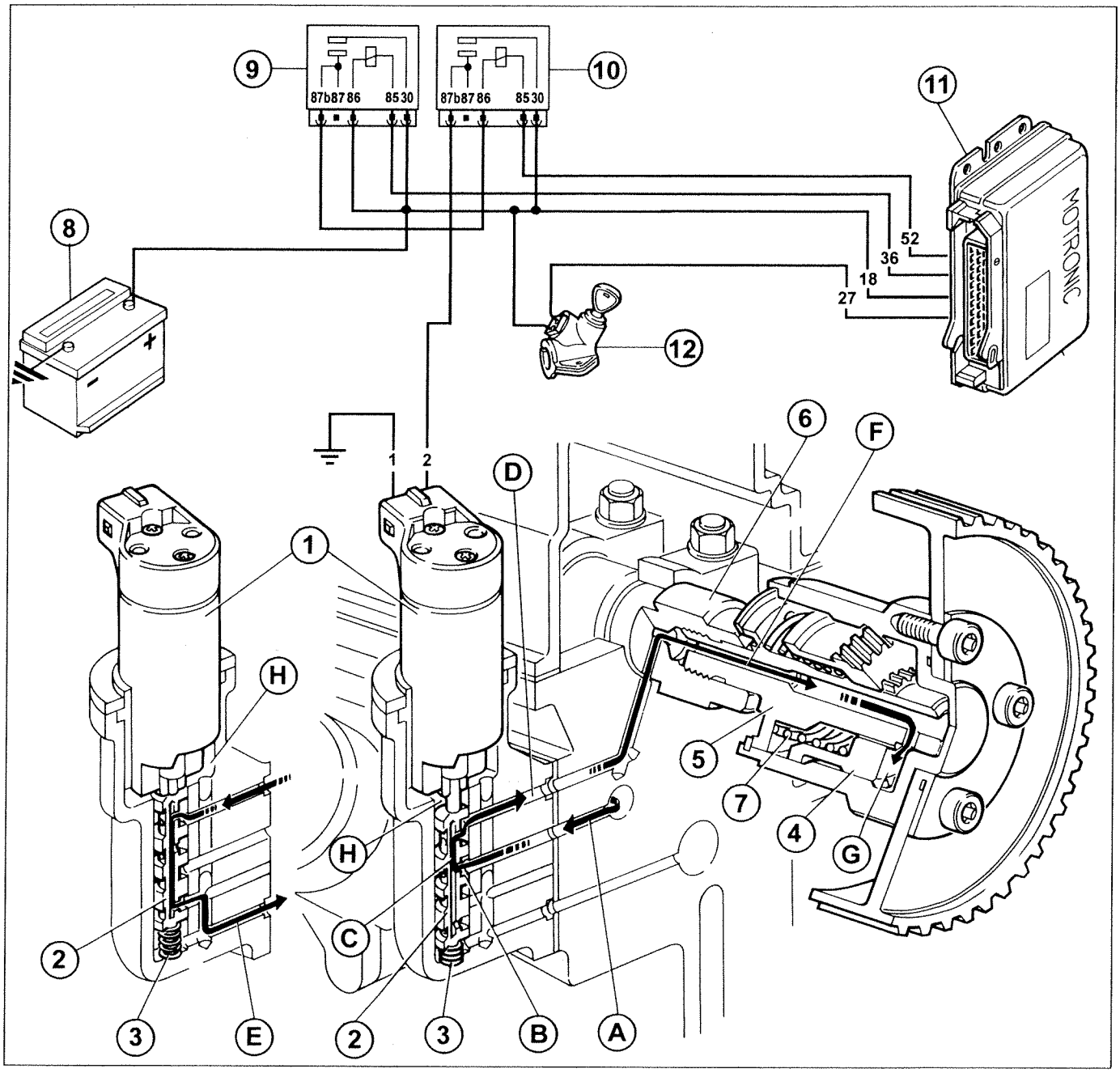

P3U28CW01

1. Solenoids
2. Valve box
3. Valve box spring
4. Piston
5. Pinion
6. Camshaft shank
7. Piston spring
8. Battery
9. Injection-ignition system relay
10. Timing variator solenoid relay
11. Injection-ignition ECU
12. Ignition switch

INERTIA SAFETY SWITCH

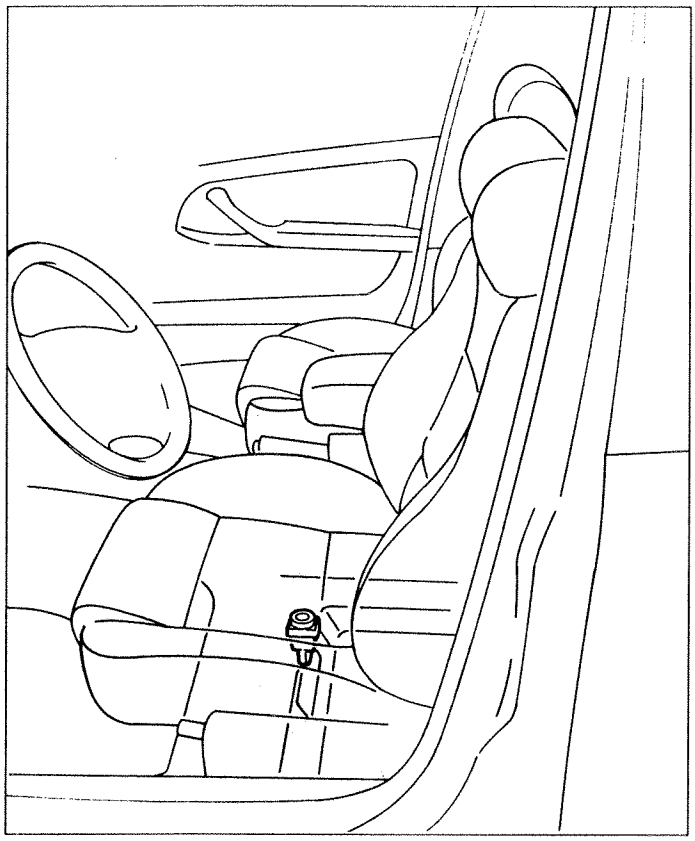

P3U27CX01

To increase the level of safety for vehicle occupants in case of impact, the vehicle is fitted with an inertia switch located inside the passenger compartment beneath the driver's seat on the left hand side.
This sensor reduces the likelihood of fire (due to fuel emerging from injection system) by de-activating the pump that supplies the injection circuit.
The switch consists of a steel ball fitted inside a tapered housing. It is normally held in locked position through the attractive force of an permanent magnet.
In case of violent vehicle impact, the ball is released from the magnet and opens the normally closed (N.C.) electrical circuit. This cuts off the fuel pump earth connection and consequently fuel flow to injection system.

To restore pump earth connection, move seat backward and press switch until it clicks on.

After even an apparently light collision, if a smell of petrol is noted or fuel leaks are seen, do not activate the switch again until the fault has been found and corrected in order to avoid the risk of fire. If no leaks are noted and the vehicle is able to start, press the button to re-activate the pump.

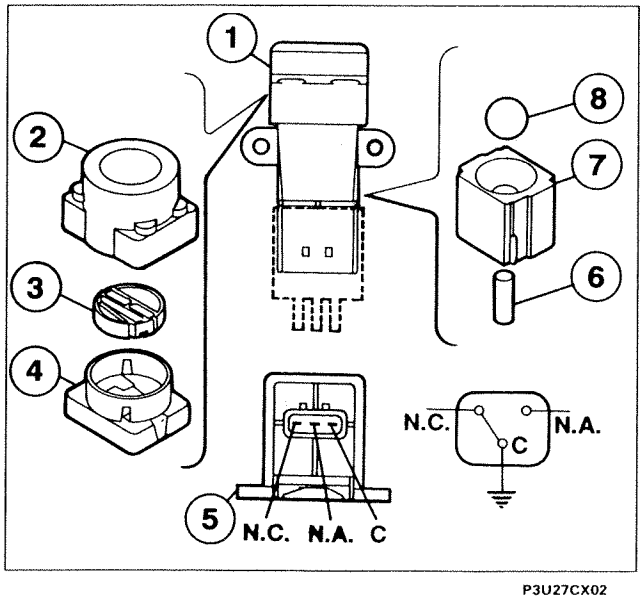

P3U27CX02

Components of inertia switch

1. Inertia sensor assembly
2. Sheath
3. Button
4. Upper end
5. Fitting end
6. Permanent magnet
7. Permanent magnet seat
8. Steel ball

C= Common terminal
N.C. Normally closed
N.A. Normally open

Copyright Fiat Auto

D. CIRCUIT FOR CHECKING HARMFUL EXHAUST EMISSIONS

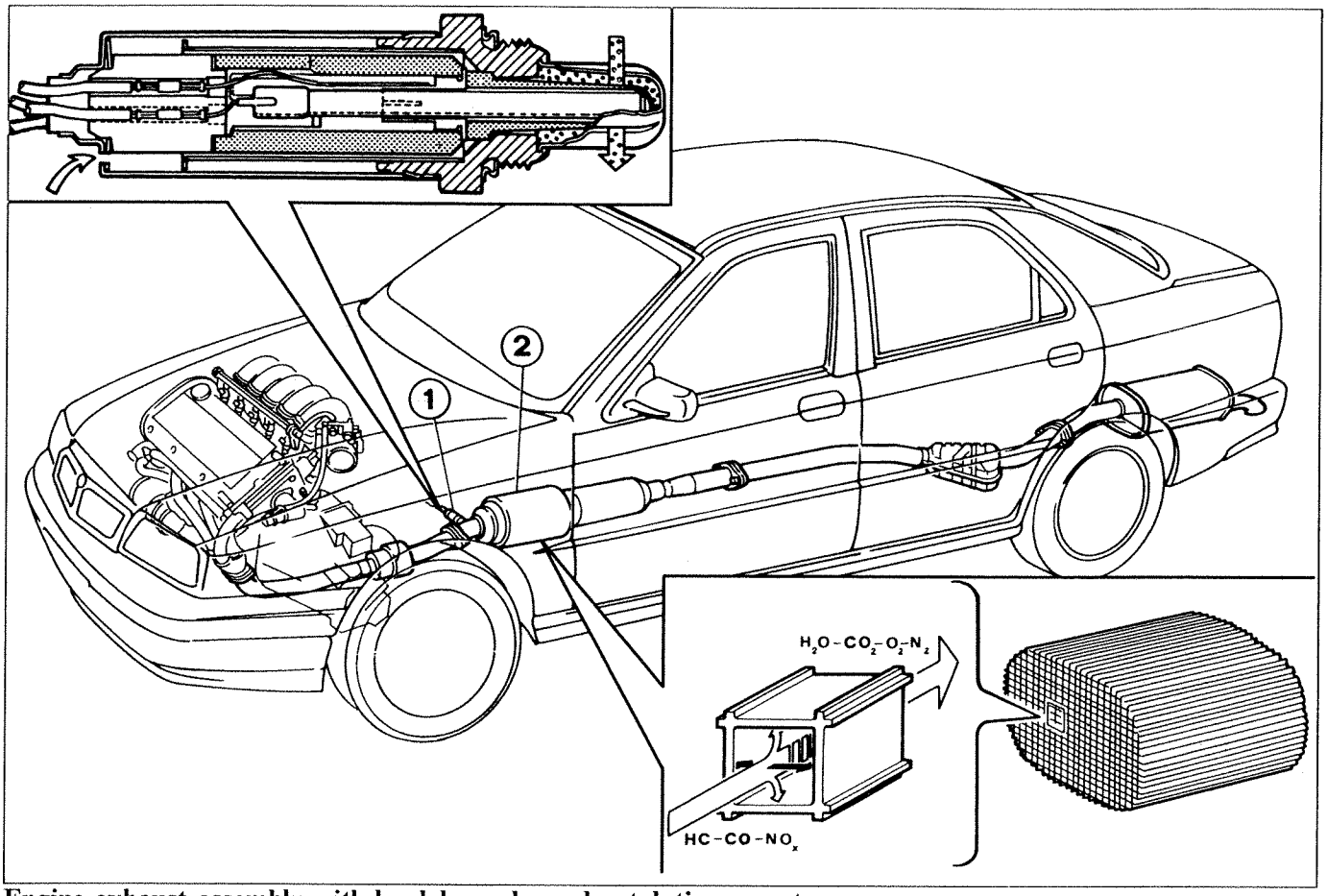

Engine exhaust assembly with lambda probe and catalytic converter P3U30CW01

1. Lambda probe
2. Catalytic converter

In order to meet stringent specifications covering noxious emissions from internal combustion engines (which dicate a need for increasingly precise air-fuel mixture proportions) the vehicle is fitted with a four-channel hot lambda probe for measuring exhaust gas oxygen content and a catalytic converter.

The sensor output signal is sent to the ECU in order to adjust air-fuel mixture with the aim of keeping mixture stoichiometric ratio as close to specified values as possible.

The exhaust system is equipped with a catalytic converter made out of special noble metal alloys. It is housed in a stainless steel container able to stand up to high operating temperatures.

The catalytic converter converts uncombusted hydrocarbons, carbon monoxide and nitrogen oxides in exhaust emissions (even though quantities are minimal due to the electronic ignition and injection system) into non-pollutant compounds.
This reliable system ensures operation is fault-free. At the same time, pollutant levels are minimised while performance levels are above average.
Use solely unleaded fuel with octane number (R.O.N.) at least 95 to extend life of certain components, including exhaust gas catalytic converter and also ensure peak vehicle performance and reliability.

NOTE *The fuel octane number (R.O.N. = Research Octane Number) indicates ability to resist self-ignition.*

The higher the octane number, the greater the likelihood of avoiding cylinder head knock.
It is essential to use a fuel with a suitable octane number in order to avoid damage to engine.

FUEL EVAPORATION CONTROL AND VAPOUR RECOVERY CIRCUIT

The system adopted for tank ventilation is "closed" type.
This system prevents fuel vapours formed within the tank and fuel system from entering the atmosphere It also prevents release of their load of polluting light hydrocarbons (HC).

The system consists of tank (9), vapour separation tank (8), multifunction valve (7) for controlling vapour flow, two-way pressure relief and ventilation valve (6) in fuel filler plug, active carbon filter (2) and vapour cut-off valve (1) which is controlled by ECU (5).

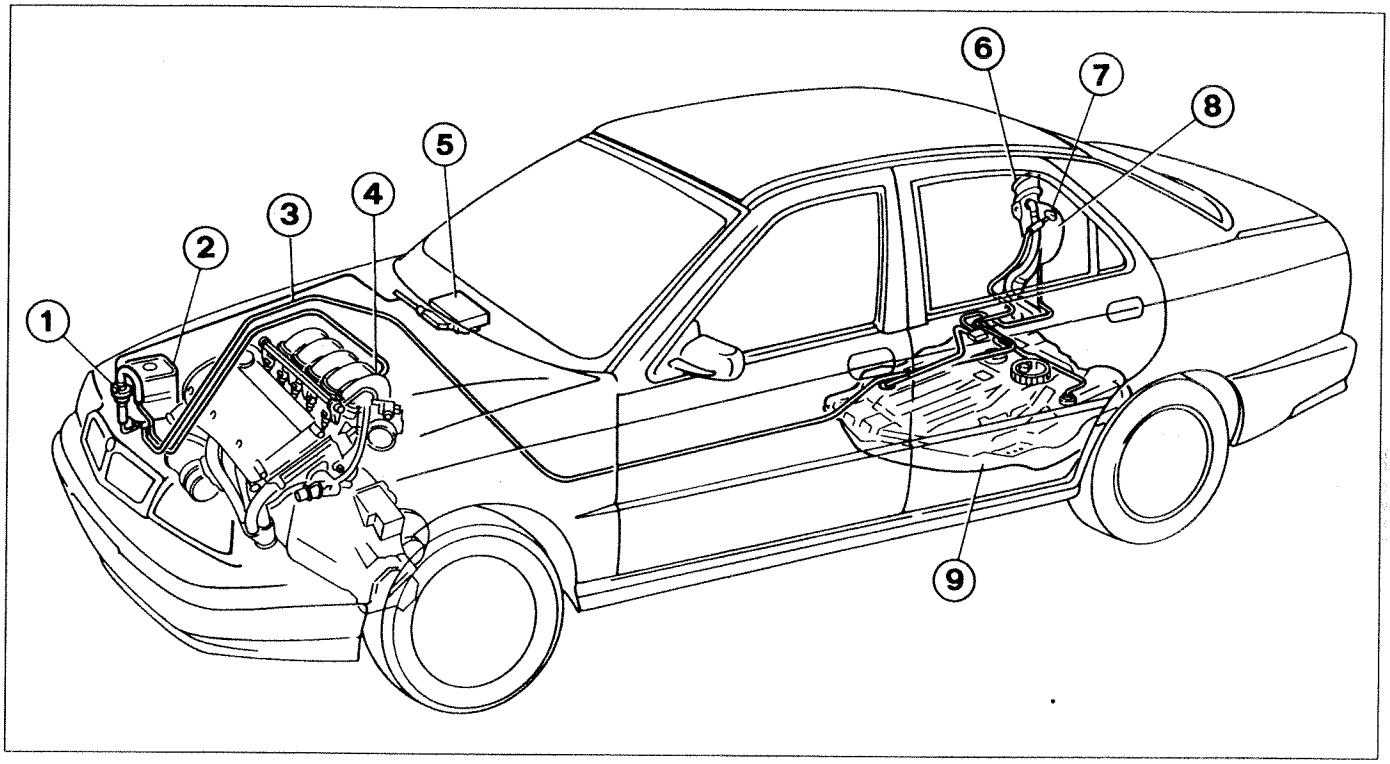

P3U29CX01

1. Fuel vapour cut-off solenoid
2. Active carbon trap filter
3. Tank vapour inlet lines
4. Vapour intake on manifold
5. Injection-ignition ECU
6. Filler fitting plug with pressure relief and ventilation valve
7. Multifunction valve
8. Fuel vapour separator (expansion tank)
9. Fuel tank

Principle of operation

The system operates when, with high outdoor temperatures, after the vehicle has been at a standstill for a long time, the fuel temperature increases (because the tank is no longer cooled by the car's motion) and brings about a pressure increase inside the tank. This increase may occur with medium-low fuel levels or with the tank full - in particular:

- **With the tank full** multifunction valve (7) is closed and fuel may not go to filter (2) and spoil the active carbon by direct contact. If pressure inside the tank exceeds a certain limit, the two-way pressure relief valve (6) opens to allow excess pressure to vent outside;
  If necessary, valve (6) may open in the opposite direction to ventilate valve if a vacuum has been set up inside;

- **With medium-low fuel levels** multifunction valve (7) allows fuel vapours to flow to filter (2) when they exceed a certain pressure. Here they are absorbed and cleaned by the active carbon granules. The vapours then flow on to the intake manifold when the ECU (5) opens solenoid (1).

Copyright Fiat Auto

DESCRIPTION OF OPERATION OF MAIN FUEL EVAPORATION CONTROL SYSTEM COMPONENTS

Multifunction valve

This valve performs the following functions:
- prevents fuel flowing out in case the vehicle overturns in an accident;

- vents fuel vapours from tank to the active carbon trap filter;
- ventilates the tank if a vacuum builds up inside.

This valve consists of: a float (2), a heavy ball (3), a plate (4), pushed against valve case (5), plate (8) pushed up against plate (4) by spring (9). Multifunction value operates as follows, depending on fuel tank level:

a. if the tank is full float (2) blocks hole (1) to prevent liquid fuel from reaching active carbon filter and avoid damage to the filter;
b. the tank fuel level drops, float (2) is lowered and rests upon ball (3) to open hole (1). When the pressure exercised by fuel vapours on plate (4) overcomes load of spring (5), a ring opening between plate and valve case allows fuel vapours to emerge through duct (6) and reach the active carbon filter.

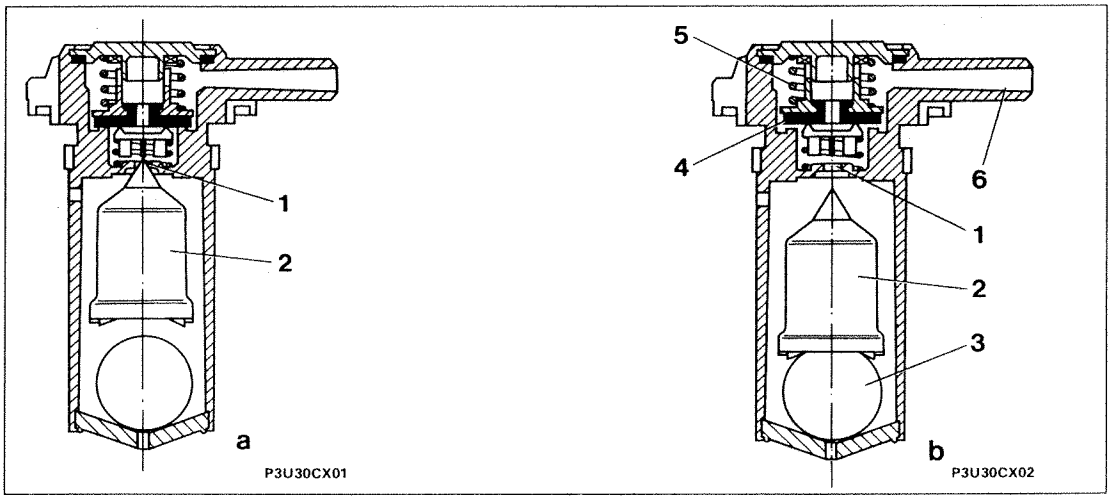

c. if the drop in tank fuel level is sufficient to set up a vacuum in the tank, this acts on plate (8) and overcomes load of spring (9) so that this moves down to allow tank ventilation through port (7).

d. if the vehicle overturns, however full the tank, the weight of ball (3) acts on float (2) to push the float against hole (1) and prevent a dangerous flow of fuel to the intake manifold with the attendant risk of the vehicle catching fire.

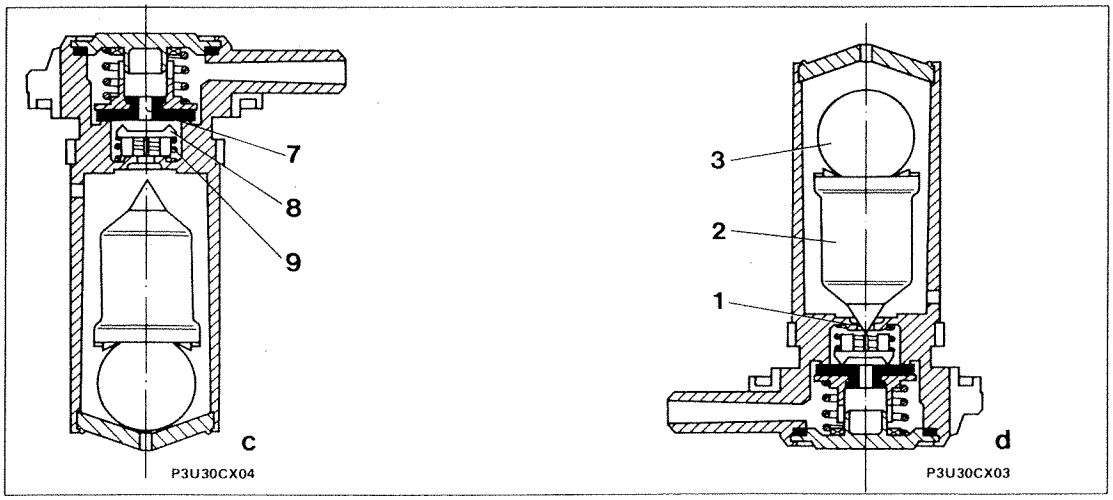

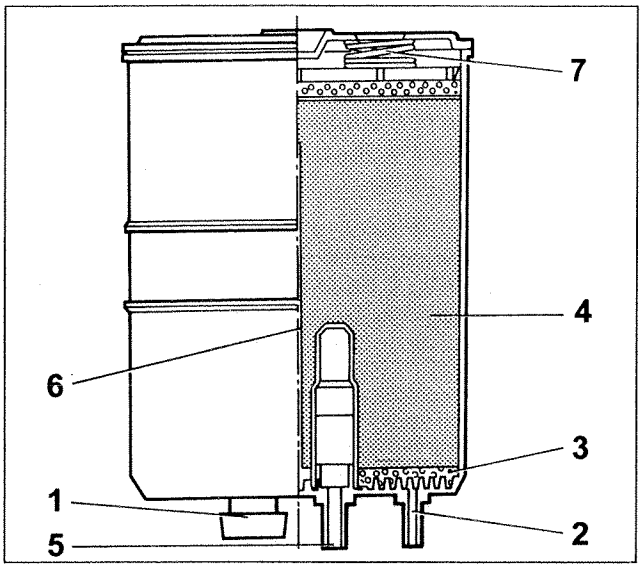

P3U33CW01

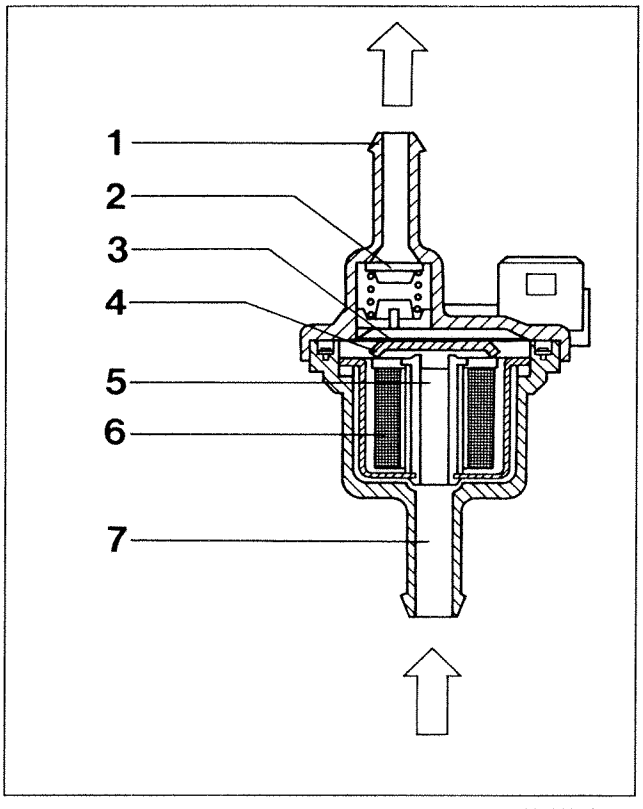

P3U31CX01

1. Inlet fitting (from active carbon filter))
2. Check valve
3. Spring pack
4. Plunger
5. Outlet port
6. Solenoids
7. Outlet fitting (to intake manifold)

Active carbon trap filter

This consists of carbon granules (4) that trap fuel vapour entering intake (5).

Flushing air enters intake (1), through paper filter (3) and flows over the carbon granules to remove fuel vapours and carry them toward the outlet (2) and then on toward the cut-off valve.

Air entering through intake (5) may also be pulled back by a vacuum in the tank, when it serves to ventilate the tank.
Partition (6) ensures that the flushing air flows over all the carbon granules and promotes the release of fuel vapour toward the inlet manifold.
Two springs (7) allow the mass of granules to expand when the pressure increases.

Vapour cut-off solenoid

This ECU-controlled valve controls the quantity of fuel vapours taken up by the active carbon filter and directed to the intake manifold.

When inactive, this valve is open. Turn ignition switch to MAR to close for activation. When excited, solenoid (6) attracts plunger (4), which overcomes the load of spring pack (3) to close orifice (5) and prevent fuel vapour from passing through.

Operation is controlled by the ECU as follows:

- during the start-up stage, the solenoid remains closed to prevent fuel vapours producing an over-rich mixture;

- when the engine is started, the ECU sends the solenoid a signal that modulates opening according to signal empty/full ratio.

In this way, the ECU controls the quantity of fuel vapour sent to the intake. This prevents significant changes (particularly when idling) in mixture concentration.

NOTE *The solenoid must be fitted the right way round: the arrow on the case should point towards the vacuum intake on the intake manifold.*

Copyright Fiat Auto

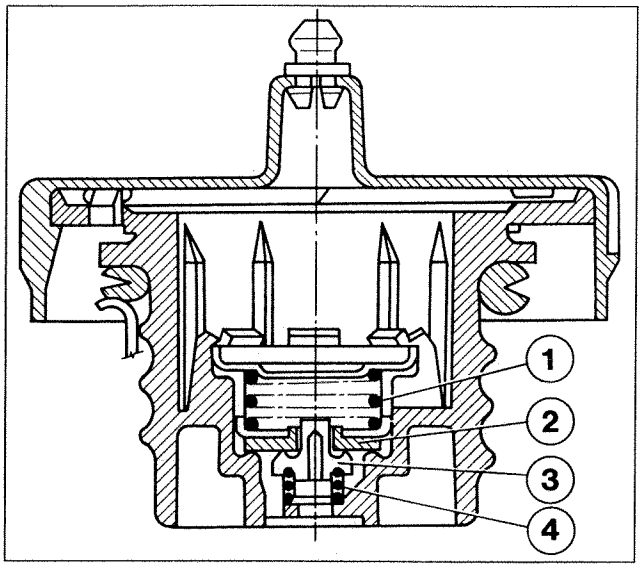

P3U34CW01

Safety and ventilation valve

This valve is located in the fuel filler fitting plug and performs the following functions according to pressure inside tank:

- discharging excessive pressure set up inside tank (pressure relief function). Pressure acts on plate (2) and overcomes load of spring (1) to discharge excess vapour to the atmosphere.
- permitting outside air to flow into tank when an excessive vacuum is set up inside as fuel is used up (ventilation function). In this case, when the vacuum exceeds load of spring (4), valve (3) moves to admit air to the tank.

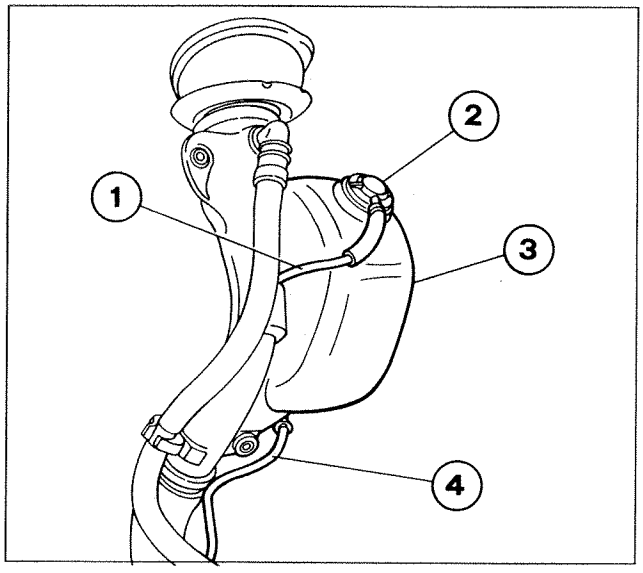

P3U32CX02

Fuel vapour separator (expansion tank)

Fuel vapours from the tank reach vapour separator (3) located besides the fuel filler fitting through line (4).

A proportion of the vapours condenses and turns to the tank through the same pipe (4), whereas the remaining vapours emerge from the separator through multifunction valve (2) and are conveyed to the active carbon filter through pipe (1).

1. Line connecting fuel vapour separator to active carbon filter
2. Multifunction valve
3. Fuel vapour separator
4. Line connecting vapour separator to fuel tank

CRANKCASE GAS RECIRCULATION SYSTEM

The system controls crankcase emissions of vent gases (air-fuel mixtures and combusted gases) that leak through the piston rings and oil vapours, by causing them to recirculate to the intake.

Vent gases directed up through baffles emerge from the engine oil filler fitting. They then pass through separators (7) located under the cam cover. Here they lose part of their oil content. This falls back to the camshafts through line (6).

Pipe (6) is formed in the shape of a trap to prevent vent gases leaking through. In this way, only oil droplets are recirculated.
The remaining gases emerge from outlet (5), which contains a flame trap (4) to prevent combustion due to the flame returning from the butterfly valve case (5).
Vent gases flow from outlet (5) to T-fitting (3).
With throttle open, gases flow through outlets (1) and (2) to be taken up into manifold.
With throttle closed, vacuum in intake manifold takes up gas through outlet (1), which contains a PCV limiter valve (8) (Positive Crank Ventilation). This reduces the incoming flow.

The PCV can be modulated and the quantity of gas flowing through is proportional to the vacuum in the intake manifold.
When the butterfly valve is fully open (condition A), the vacuum inside the intake manifold is minimal. Spring (10) is fully extended and PCV valve allows a maximum amount of vent gases to flow through.

Conversely, when the throttle is fully closed (condition B), the vacuum inside the manifold is maximal. This moves plunger (9) to reduce the vent gas flow inside the PCV valve and reduce level of gas taken into the manifold.

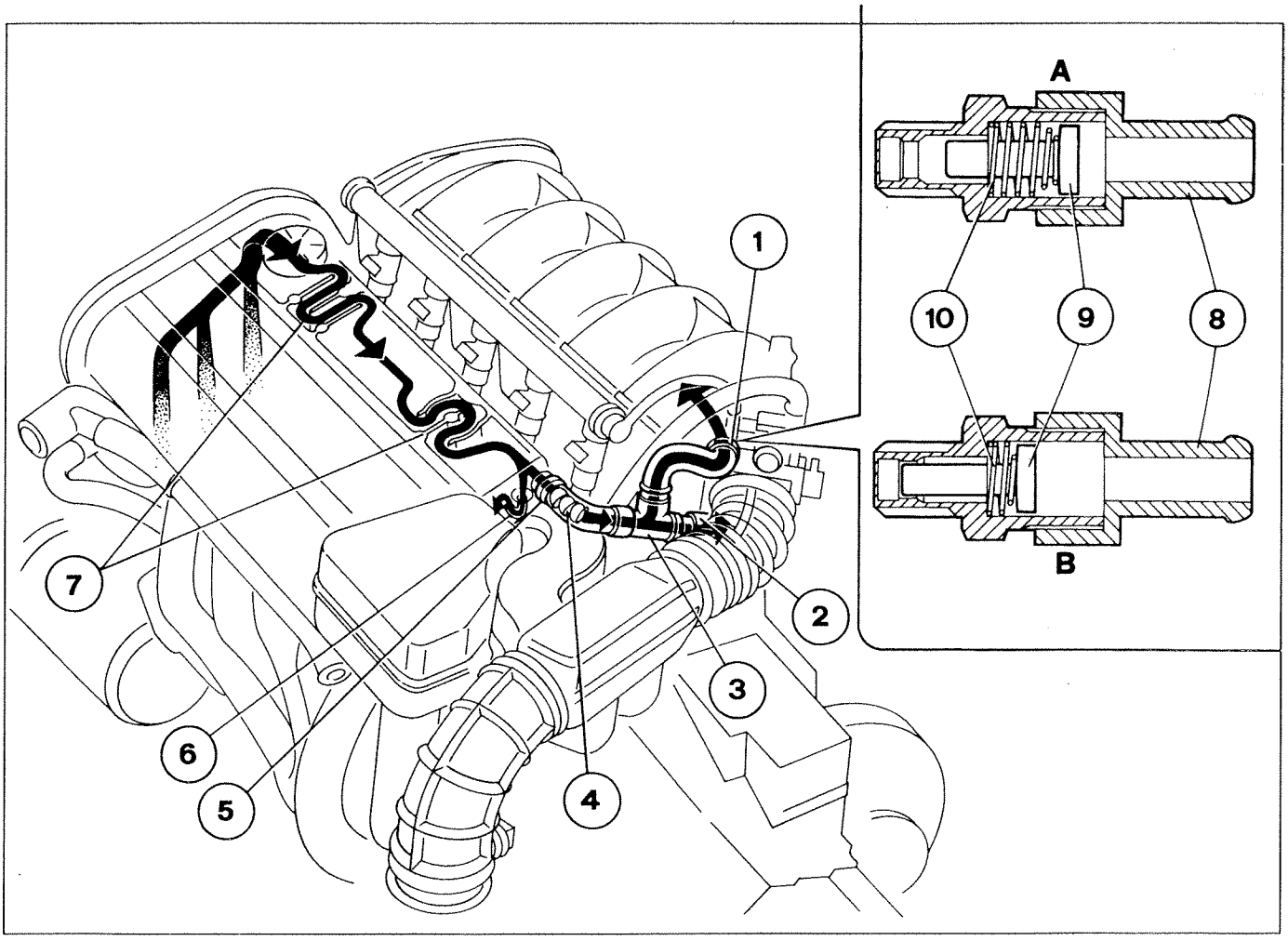

P3U35CW01

Copyright Fiat Auto

10.

CHECKS AND ADJUSTMENTS TO BOSCH M2.10 INJECTION/IGNITION SYSTEM ADDITIONAL TO DIAGNOSIS WITH FIAT/LANCIA TESTER

OBSERVE THE FOLLOWING PRECAUTIONS WHEN WORKING ON VEHICLES WITH MOTRONIC INJECTION-IGNITION SYSTEMS:

- *never start the engine when the electrical terminals are poorly connected or loose on the battery poles;*
- *never use a quick battery charger to start the engine;*
- *never disconnect the battery from the car circuit with the engine running;*
- *when charging the battery quickly, first disconnect the battery from the vehicle circuit;*
- *if the vehicle is placed in a drying oven after painting at a temperature of more than 80° C, first remove the injection/ignition ECU;*
- *never connect or disconnect the ECU multiple connector with the ignition key in MARCIA position;*
- *always disconnect battery negative lead before carrying out electrical welding on vehicle.*

Note that his system has a stand-by memory containing all learnt self-adaptive parameters. Because all this information is lost when the battery is disconnected, this operation should only be carried out when absolutely essential.

REMOVING-REFITTING FUEL FILTER

- Raise the vehicle.
- Unscrew fuel inlet and outlet fittings from filter
- Collect fuel emerging during the operation in a suitable container. Plug fittings without bending or twisting rigid pipes
- Remove clip after unscrewing retaining screw.

The fuel filter must be replaced at intervals of 60,000 km.
After replacing the filter, start the engine and check for leaks from the seals.

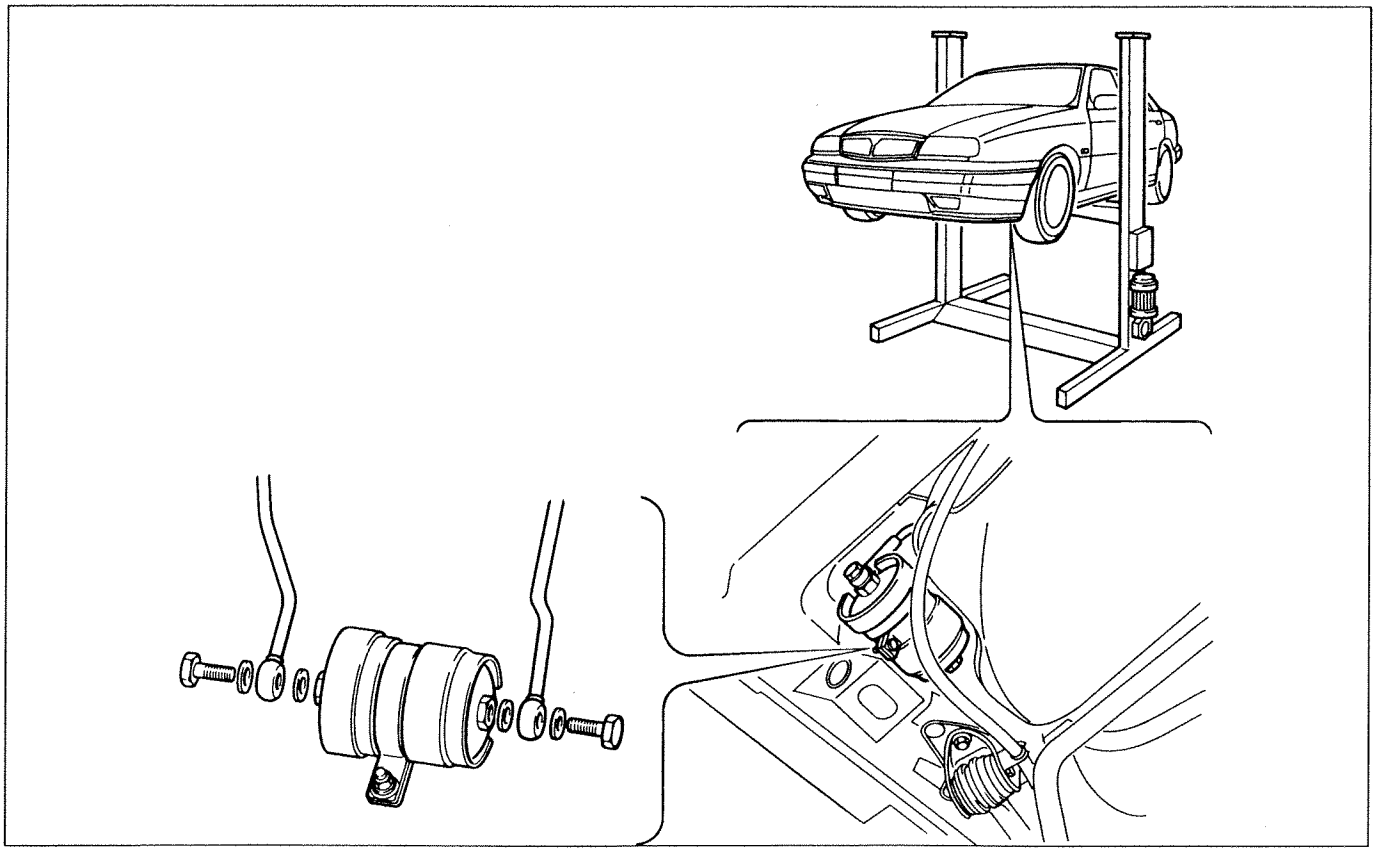

P3U33CX01

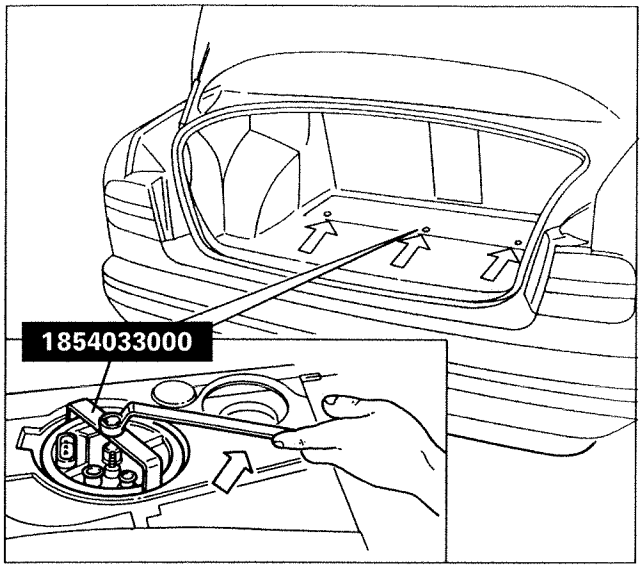

P3U34CX01

REMOVING-REFITTING ELECTRIC FUEL PUMP

The pump is located inside the tank.
Proceed as follows to remove:

- undo retaining studs indicated and raise boot mat;
- remove dust cover
- disconnect electrical connection;
- remove retaining plate;
- disconnect fuel delivery line from pump (white fitting);
- disconnect fuel return line from pump (red fitting);
- uncrew ring nut retaining pump to tank using tool 1854033000 and a box wrench;
- remove pump.

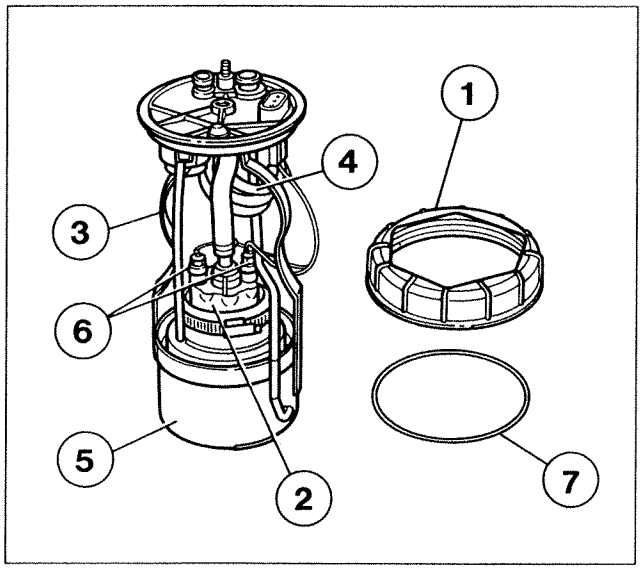

P3U34CX02

1. Retaining lock-ring
2. Electric pump
3. Pump flexible mount
4. Vibration (or noise) damper
5. Mesh prefilter
6. Fuel pump electrical supply terminals
7. Sealing ring

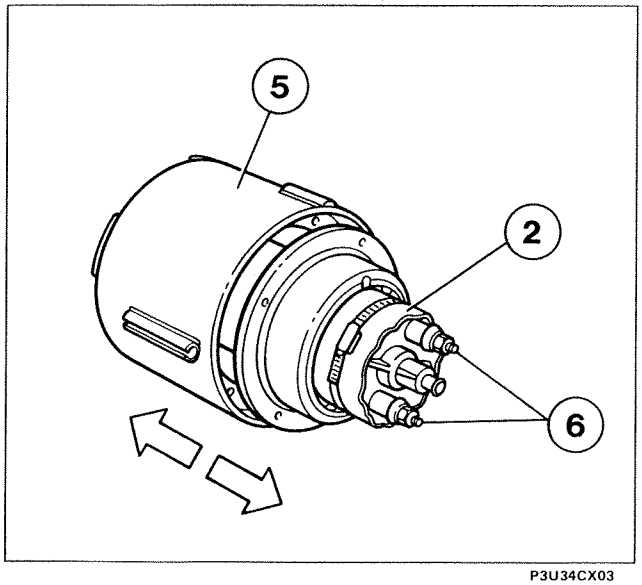

P3U34CX03

Removing pump from mesh prefilter

When refitting, do not reverse electrical lead position because terminals are of different diameter.

10.

REMOVING-REFITTING FUEL MANIFOLD TOGETHER WITH INJECTORS And PRESSURE REGULATOR

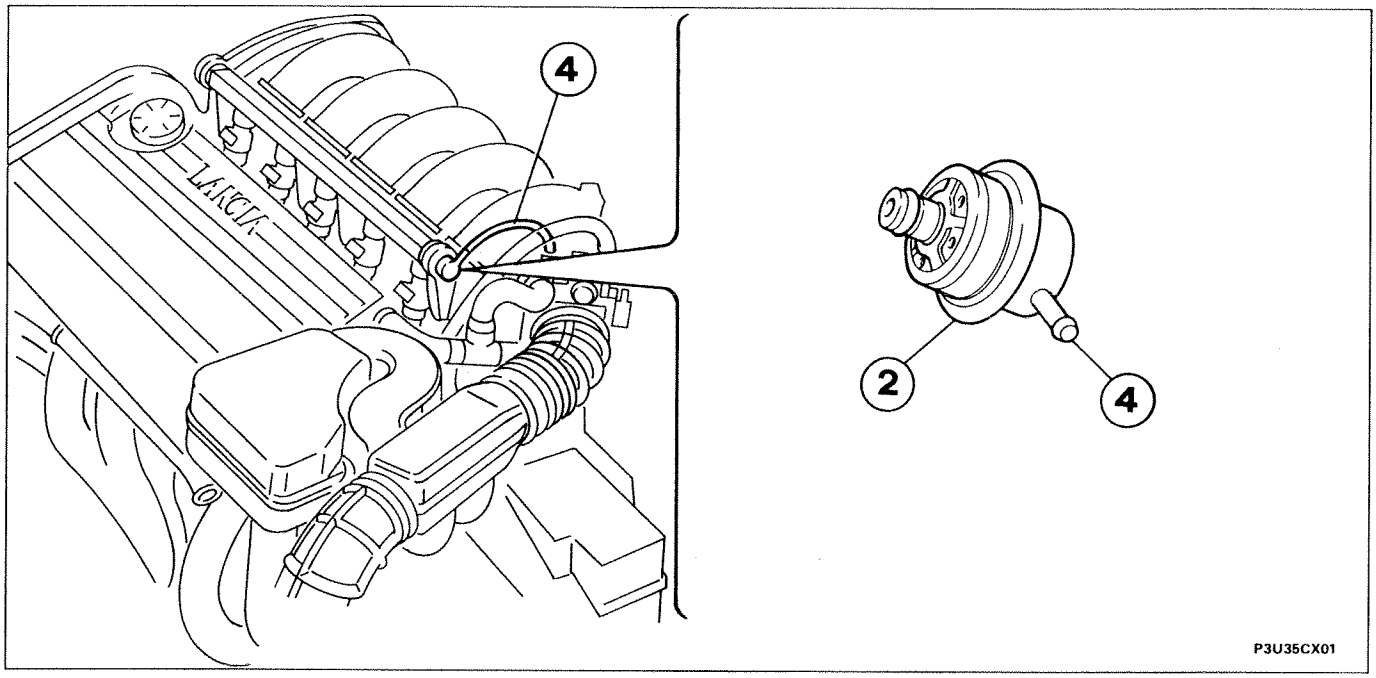

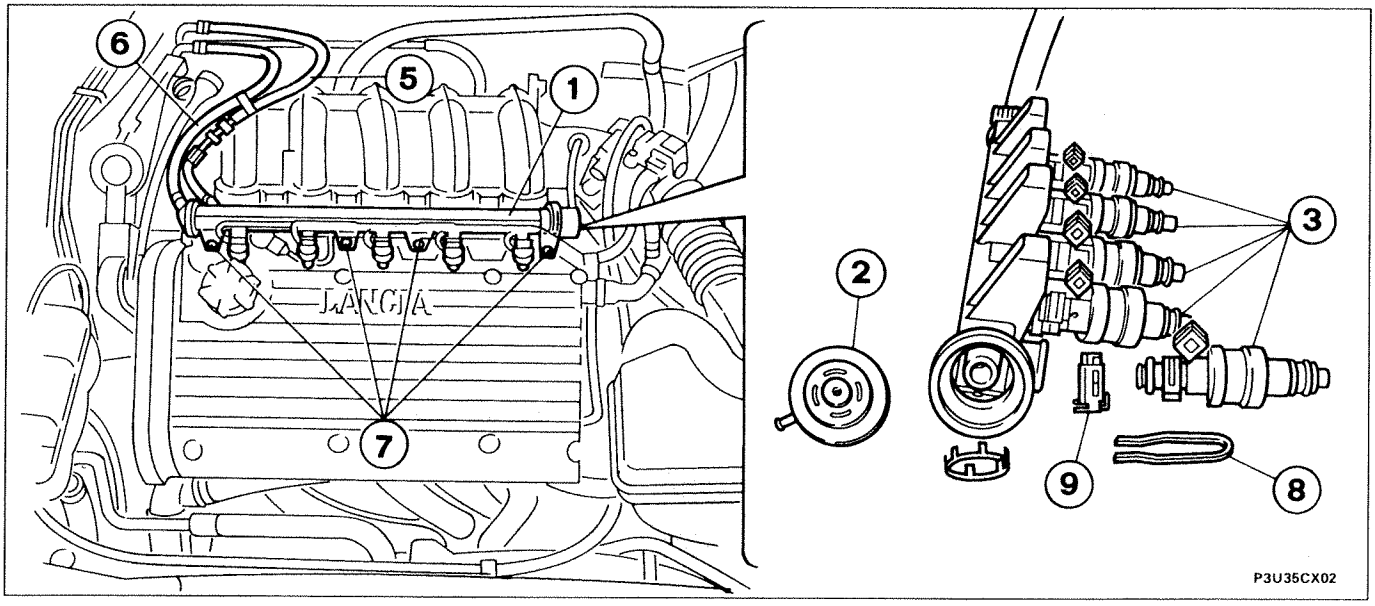

Proceed as follows:

- Disconnect fuel inlet line (5) from fitting
- Loosen clip of return pipe and disconnect rubber hose from rigid pipe.
- Disconnect electrical connectors from injectors
- Unscrew retaining screws (7).
- Remove injector/manifold assembly.
- Remove clip (9) to remove injectors from fuel manifold.

1. Fuel manifold
2. Fuel pressure regulator
3. Injectors
4. Vacuum socket from engine inlet manifold
5. Fuel inlet pipe from pump
6. Fuel return lines to tank
7. Screws retaining fuel manifold and injectors
8. Pressure regulator clip on fuel manifold
9. Clip retaining injector to fuel manifold

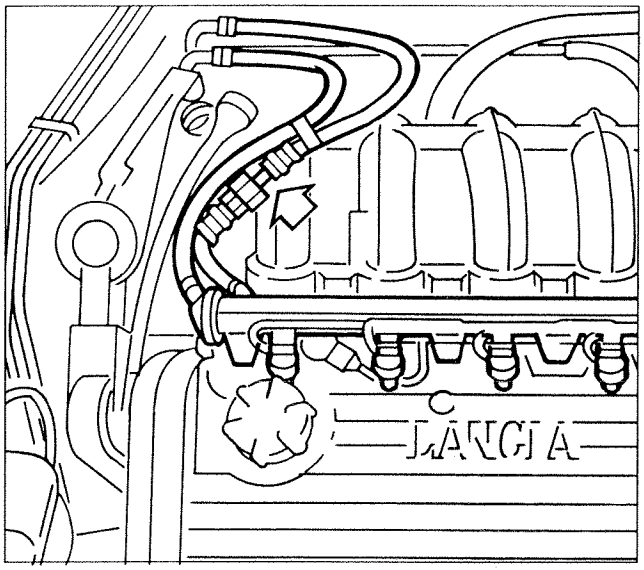

P3U39CW01

CHECKING FUEL SUPPLY CIRCUIT

Test 1

Checking fuel feed pressure

- Disconnect the fuel delivery pipe to the manifold from the fitting indicated by an arrow.
- Interpose pressure gauge 1895890000 between the disconnected pipe end and the injector fuel manifold with both cocks A and B in open position.

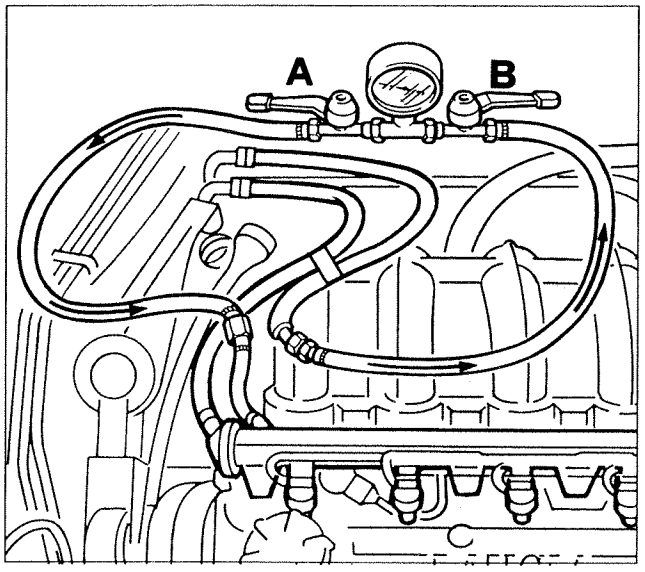

P3U39CW02

- Activate "fuel pump test" with the aid of a Fiat-Lancia Tester with engine off.
- The pressure reading on the gauge should stabilize at 3 bar under these test conditions. If pressure is insufficient or excessive, carry out test 2.

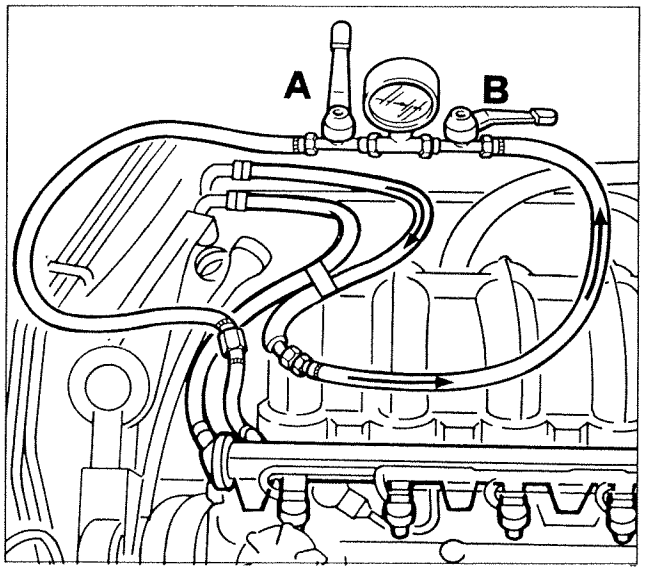

P3U39CW03

Test 2

Checking maximum fuel feed pressure (or pump efficiency)

Same connections as previous test.

- close fuel cock lever A (downstream of pressure gauge).
- operate the pump with the engine off, as described previously: pressure should reach 6 bar and not exceed 7.5 bar (pump pressure relief valve setting). If the pump fails the test, replace because it is defective.

Copyright Fiat Auto

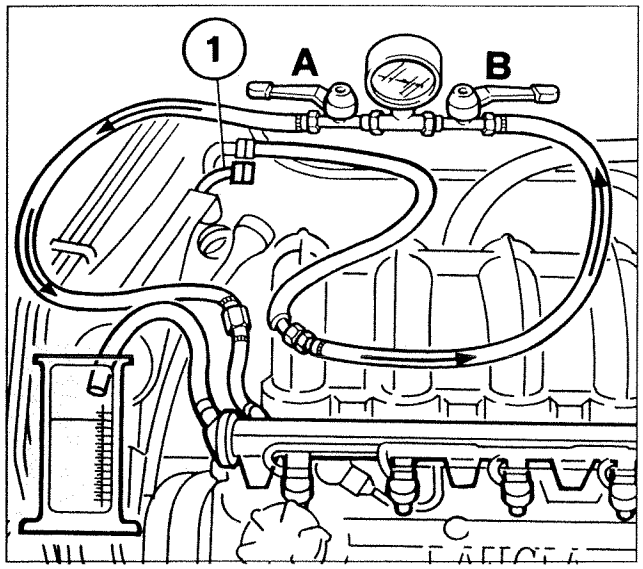

P3U40CW01

If pressure measured in test 1 (see previous page) exceeds 3 bars proceed as follows:

- disconnect fuel return pipe from pressure regulator and replace provisionally with a pipe leading to a container able to collect the fuel;
- adjust cocks A and B to open position
- operate the fuel pump (with engine off as described on previous page), then take pressure reading off pressure gauge:
  a. if it reaches 3 bars replace the fuel return pipe to the tank because it is blocked or kinked;
  b. if it exceeds 3 bars replace the pressure regulator because it is defective.

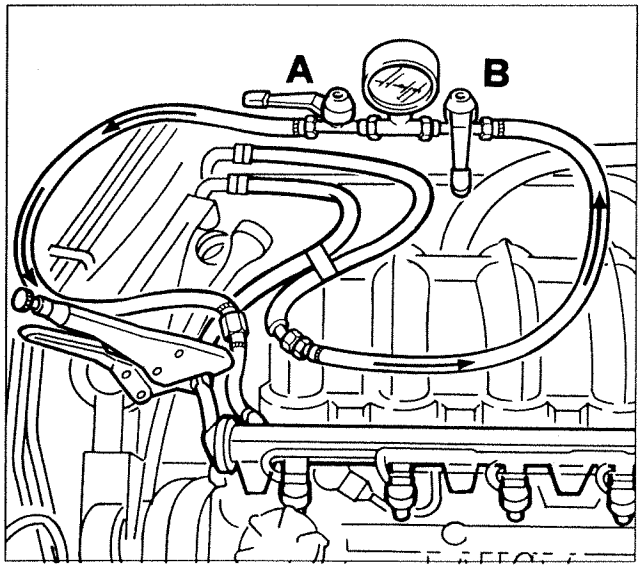

P3U40CW02

check 3

Checking injector seal

To check for drips from the injectors, connect as described in first test (regulation pressure check) and operate pump with engine off. Once regulation pressure is reached, close fuel cock control lever B (arrowed) (upstream of the pressure gauge) and simultaneously compress fuel return line to tank; use pliers for this purpose and avoid damage to the pipe.

This operation is necessary to tell the difference between an actual injector leak and an imperfect seal in the fuel pressure regulator reflux valve

Then:
- turn off the pump.
- see whether the pressure remains constant for about 60 seconds once it stabilizes (i.e. drops slightly).

If not, one or more of the injectors or a fitting must be leaking.
- In this case, disconnect the fuel manifold from the inlet manifold while maintaining the connection to the pressure gauge.
- Repeat the previous test, leaving the pressure gauge cock open.
- After supplying the pump with the engine off, look to see whether any of the injectors or connection sections are dripping.

Replace any dripping injectors and/or repair the defective seal in the leaking joint.

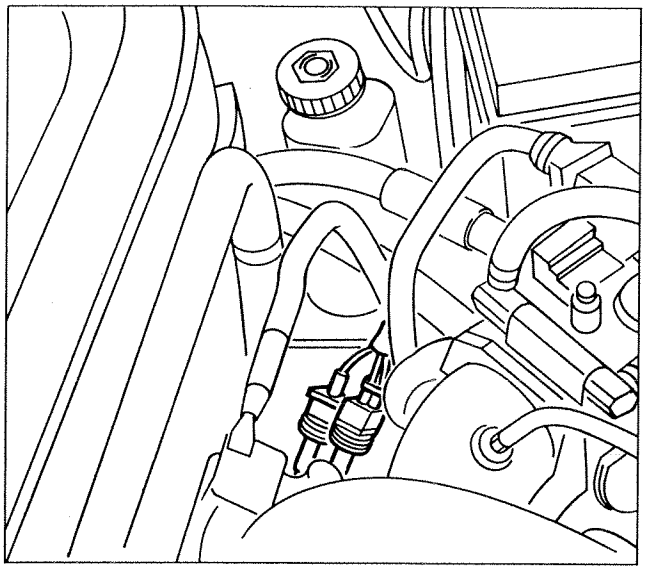

P3U41CW01

REMOVING-REFITTING LAMBDA PROBE

NOTE *The probe may be quickly rendered unserviceable by the presence of even slight amounts of lead in the fuel. The programmed maintenance plan therefore stipulates functional checks at 45,000 and 90,000 km.*

- Position vehicle on lift.
- Disconnect battery negative lead.
- Disconnect both electrical connections from Lambda probe.
- Remove Lambda probe from its seat.

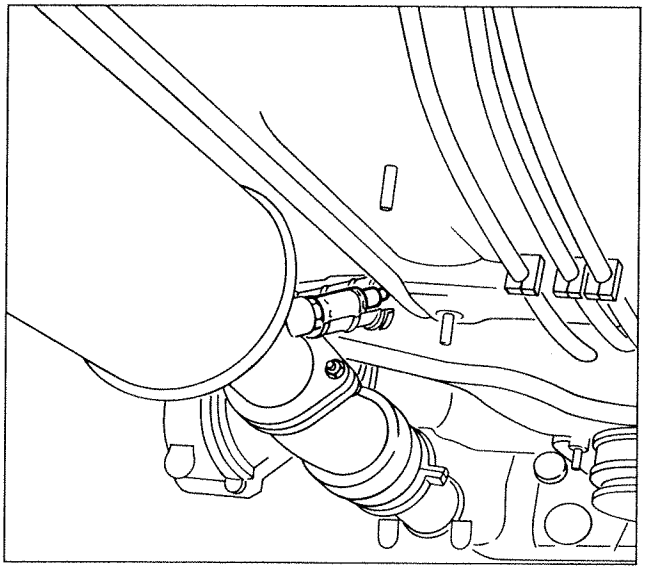

P3U41CW02

5.0-6.0 daNm

- Do not force component during tightening because this could cause irreparable damage.

When refitting a new lambda probe, spread threaded part with anti-slip graphite grease (e.g. Bosch VS 14016-FT).

The electrical resistance reading on the digital multimeter should be between 2.5 Ω and 4.5 Ω at room temperature.

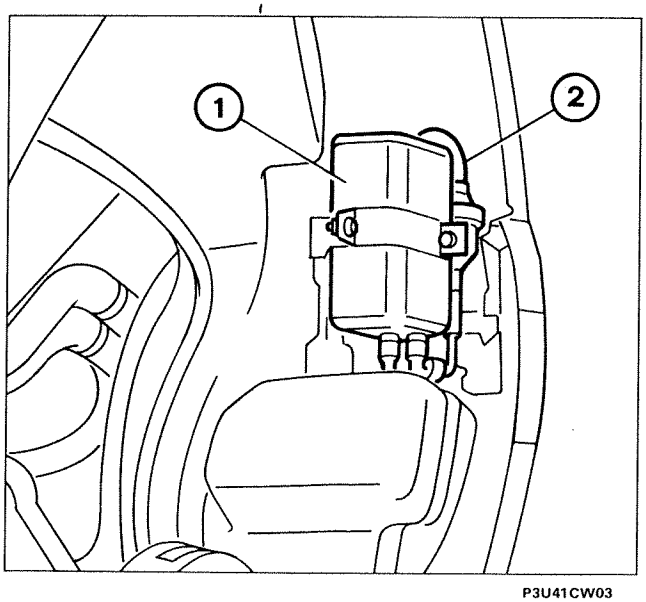

P3U41CW03

REMOVING-REFITTING ACTIVE CARBON TRAP FILTER AND FUEL VAPOUR CUT-OFF SOLENOID

The same procedure applies to both active carbon trap filter (1) and solenoid (2).

- Lift vehicle;
- remove right front wheel;
- remove front right wheel arch lining;

- remove filter and solenoid from compartment, separate and disconnect electrical connection and associated lines.

Copyright Fiat Auto

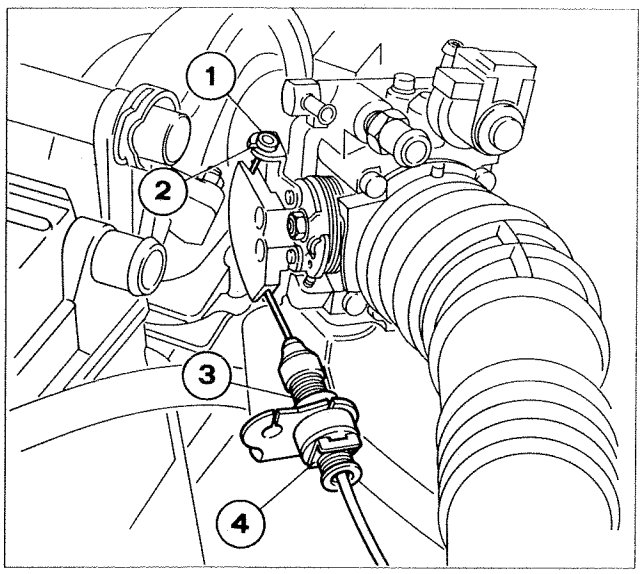

P3U36CX01

ADJUSTING THROTTLE CABLE

Adjust accelerator cable by moving clip (4) to one of the different grooves on bushing (3).

Position clip so that accelerator cable head (1) fits freely into slot (2) without altering engine idle speed.

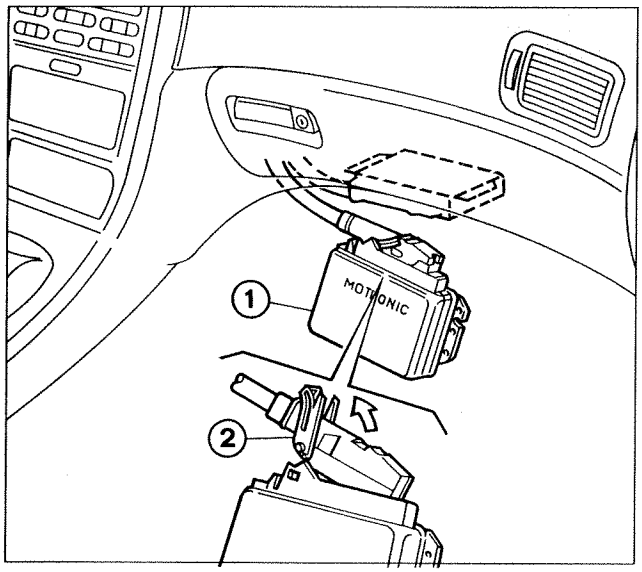

P3U36CX02

REMOVING-REFITTING ELECTRONIC CONTROL UNIT

The electronic control unit is located beneath the oddment box (right hand side). Proceed as follows to remove the ECU:

- Remove lining beneath facia
- Unscrew bolts retaining ECU (1) to mount bracket
- Pull clip for connector (2) upward in order to remove multiple connector

Because unconnected leads may be live, do not make any connections otherwise ECU may short-circuit.

Always fit and remove multiple extractor with ignition key out.

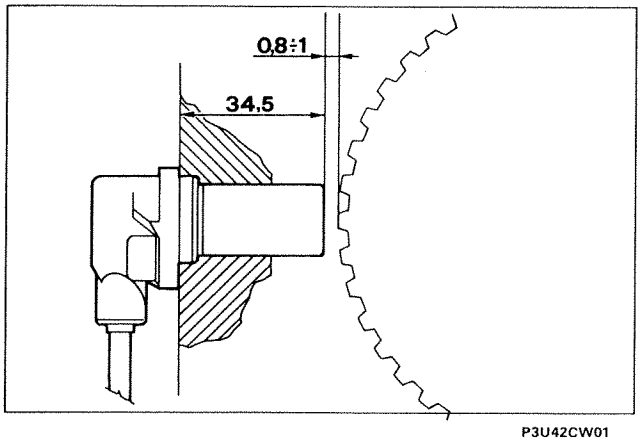

P3U42CW01

When measuring the gap, ensure phonic wheel is positioned at right angles and aligned with a tooth and not a recess.

CHECKING RPM AND TDC SENSOR GAP AND RESISTANCE

The rpm and TDC sensor is fastened directly to the crankcase and does not therefore require adjustments to gap and angular position. If a fault is suspected, gap may be checked as follows:

- remove rpm and TDC sensor;
- check that gap between sensor contact surfaces and phonic wheel teeth corresponds to sum of sensor probe length (34.5 mm) with gap (0.8 - 1.5 mm).

Resistance reading should be between 774 Ω and 946 Ω

CHECKING ENGINE IDLE SPEED

If idle speed is not 800 ± 50/min, the adjustment cannot be carried out because the injection-ignition ECU is self-regulating. The position of the accelerator linkage must therefore be checked and then the fault detected by means of full diagnosis using a Fiat/Lancia Tester.

CHECKING LEVELS OF POLLUTING EMISSIONS

The Motronic 2.10 system self-adaptive function continually controls idle speed and CO level so that any external regulations are unnecessary (adjustment screws are no longer fitted). A check on the exhaust emissions downstream of the catalytic converter can nevertheless provide useful information on injection-ignition system operation, engine parameters and the catalytic converter

Checking CO and HC levels when idling

Measure levels of carbon monoxide (CO) and unburnt hydrocarbons (HC) with catalytic converter at service temperature (300 - 350 °C) (it is advisable to drive along a stretch of road at speed for 5 - 10 minutes in order to ensure that converter has reached service temperature. Then insert the probe of an appropriately calibrated tester until at least 30 cm inside tail pipe as shown in figure.
If exhaust tail pipe shape will not permit the probe to be fully inserted, add an extension pipe and ensure joint area is well sealed.

1. Check that idling CO and HC levels are as specified (see table)
2. If CO level is not as specified, check the following:
   - Lambda probe operation, using a Fiat/Lancia Tester;
   - for air leaks in the area around the Lambda probe seat;
   - the injection and ignition system **(particularly spark plug wear).**
3. If HC level is not as specified, engine has not been properly tuned or catalytic converter is inefficient.

CO (%)	HC (p.p.m.)	CO_2 (%)
≤ 0.35	≤ 90	≥ 13

Summary table showing emission level tolerances downstream of converter

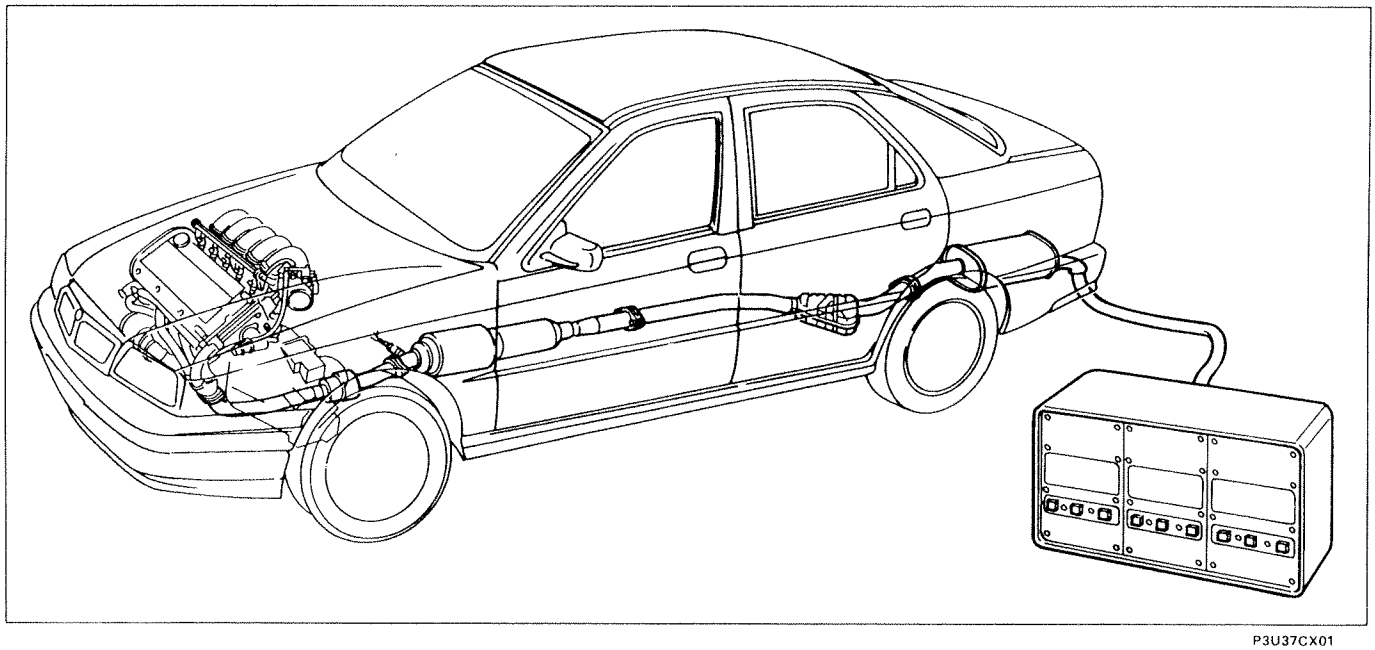

P3U37CX01

Copyright Fiat Auto

BOSCH MOTRONIC M 2.10 MPI INTEGRATED INJECTION-IGNITION SYSTEM (1996 range)

Introduction

The LANCIA k 1998 20v 1996 range differs from the previous version because it is fitted with variable geometry intake ducts.
Refer to the fuel system section for 2446 20v engine version for a description of the system (including component location) and wiring diagram.

System components

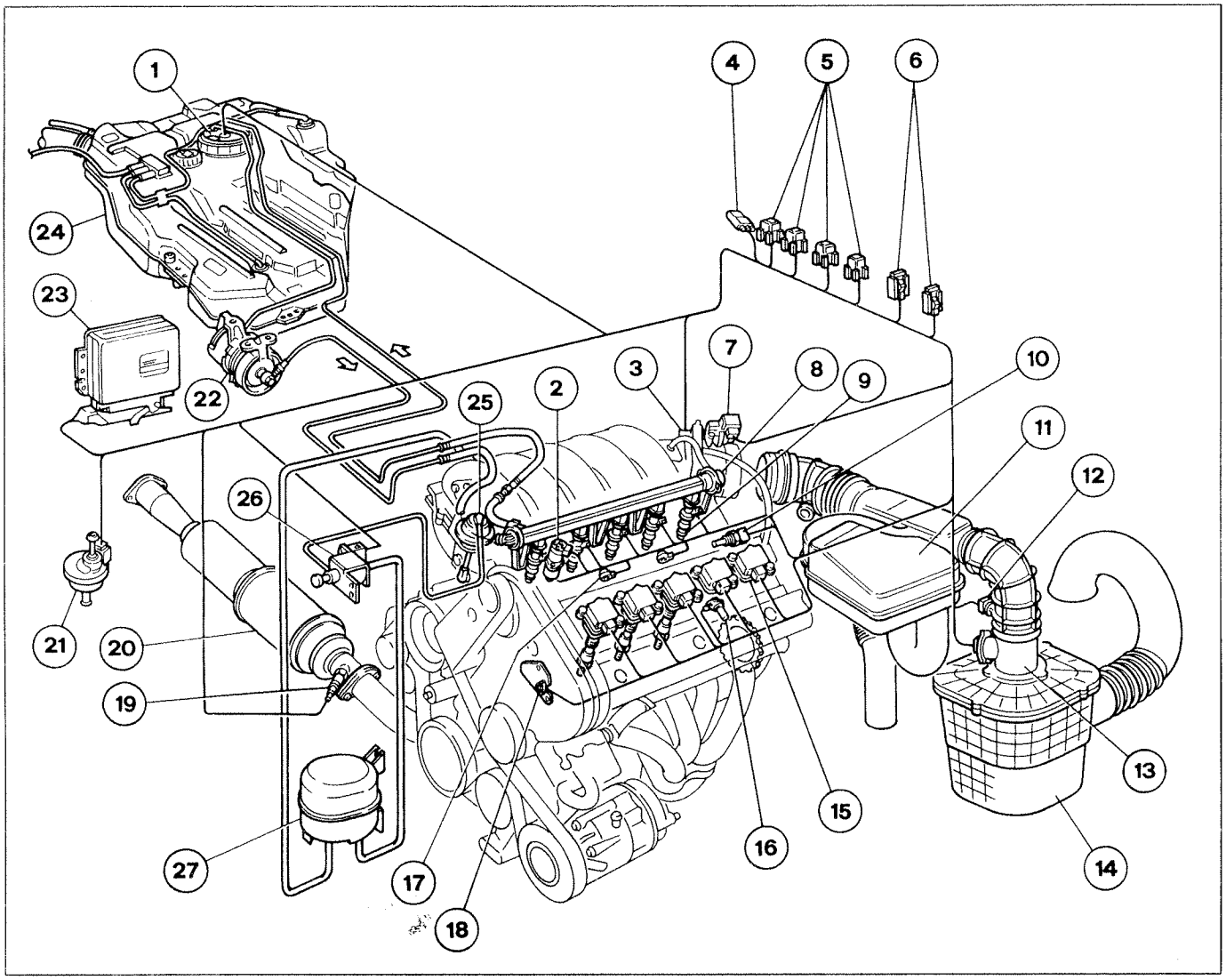

P3U01DW01

1. Electric fuel pump
2. Timing variator control solenoid
3. Throttle position sensor
4. Diagnostic socket
5. Relay unit
6. Fuel pump fuse and lambda probe
7. Idle speed actuator
8. Fuel pressure regulator
9. Injectors
10. Engine coolant temperature sensor
11. Resonator
12. Intake air temperature sensor
13. Air flow meter (debimeter)
14. Air cleaner
15. Ignition coils
16. Rpm and TDC sensor
17. Knock sensors
18. Cam angle sensor
19. Lambda probe
20. Catalytic converter
21. Fuel vapour control solenoid
22. Fuel filter
23. Injection-ignition ECU
24. Fuel tank
25. Pneumatic actuator
26. Pneumatic actuator control solenoid
27. Vacuum accumulator

page

BOSCH MOTRONIC M 2.10 M.P.I. INTEGRATED INJECTION-IGNITION SYSTEM 1
- Introduction 1
- System components 1
Air intake circuit 2
Variable geometry air intake ducts 3

- Introduction 3
- Principle of operation 3
- Diagram showing electric/air connections to variable geometry intake ducts 4

Pneumatic actuator three-way control solenoid 6
Vacuum accumulator 6
Pneumatic actuator 6
Identifying connections on control unit 7

Electrical connections between ECU/sensors and actuators 8
Electrical connections between ECU/ignition coils and injectors 9
Location of components in engine bay 10
Diagram showing ECU data input and output 11

Copyright Fiat Auto

COPYRIGHT Fiat Auto S.p.A.

Reproduction of all or part of the text and illustrations is prohibited.

The information in this publication is intended as a guide and could be superseded by modifications introduced by the Manufacturer at any time for technical and commercial reasons or in accordance with local regulations.

Fiat Auto S.p.A.
Direzione Marketing Commerciale
Direzione Post-Vendita - Servizi Assistenziali
10134 TURIN (Italy) - Corso E. Giambone, 33
Print no. 506.475/01 - Ottobre 1994 - 500
Printed in Italy - Tip. Europrint - Torino

BOSCH MOTRONIC MPI INTEGRATED INJECTION-IGNITION SYSTEM

Introduction

The Bosch Motronic system fitted to the LANCIA k 1998, 5 cylinders 20 valve engine belongs to the category of digital electronic systems with inductive discharge and static distribution integral with sequential, phased electronic injection.
This system adopts a single ECU, single wiring system and a set of common sensors.

The unit injects an exact quantity of fuel into the engine intake duct, upstream of the intake valves. This mixes with the air admitted to the cylinder to produce the correct mixture proportions.

The Motronic M 2.10 ensures efficient operation by optimising performance and fuel economy, while harmful emissions are reduced by responding in real time to a range of engine service conditions.

System components

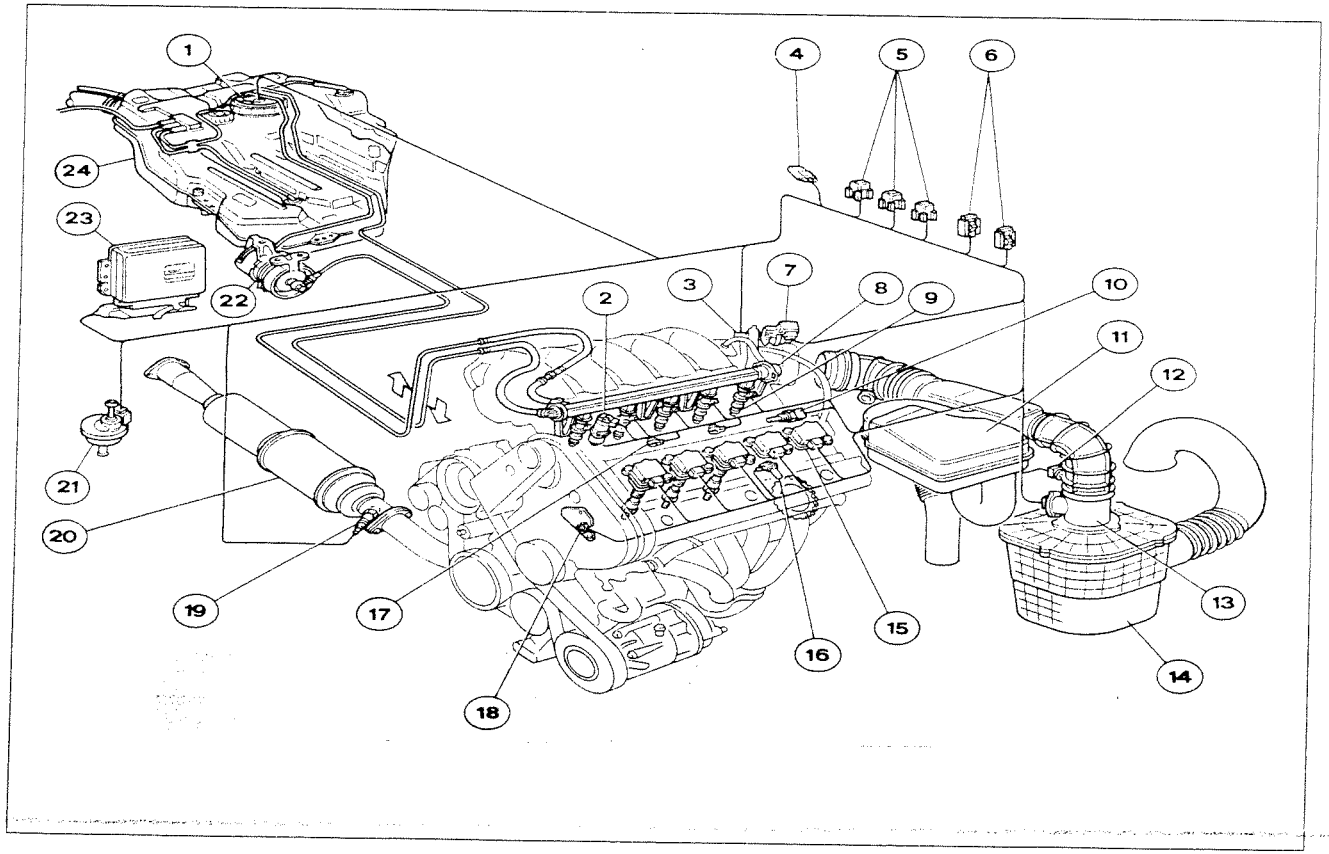

P3U01CW01

1. Electric fuel pump
2. Timing variator control solenoid
3. Throttle position sensor
4. Diagnostic socket
5. Relay unit
6. Fuel pump fuse and lambda probe
7. Engine idle speed actuator
8. Fuel pressure regulator
9. Injectors
10. Coolant temperature sensor
11. Resonator
12. Intake air temperature sensor
13. Air flow meter (debimeter)
14. Air cleaner
15. Ignition coils
16. Rpm and TDC sensor
17. Knock sensors
18. Timing sensor (cam angle)
19. Lambda probe
20. Catalytic converter
21. Fuel vapour control solenoid
22. Fuel filter
23. Injection-ignition ECU
24. Fuel tank

Copyright Fiat Auto

General description of injection system

Two essential conditions must be satisfied in the preparation of a air-fuel mixture to ensure efficient operation of controlled ignition engines:

1. metering (air/fuel ratio) must be maintained as close as possible to a stoichiometric ratio in order to ensure combustion takes place quickly without pointless waste;

2. the mixture must be made up of fuel vapours diffused through the air as finely and evenly as possible.

The nozzles of the Bosch Motronic M2.10 system perform the task of distributing the fuel by nebulizing it into minute droplets.
Because input air may be under a range of absolute pressure conditions, the amount of fuel to be injected should be adjusted in order not to alter the weight ratio between air and fuel.
A constant ratio is obtained by adjusting fuel feed pressure, using a regulator, according to intake duct vacuum level so that the difference between the two pressures is constant under all engine service conditions.

Optimal fuel metering is calculated on the basis of the following measurements:
exact quantity of air taken in by debimeter (air flow meter)
- engine rpm, relayed by rpm sensor
- acceleration required, relayed by butterfly valve position sensor
- coolant temperature, relayed by sensor on thermostat mount;
- exhaust gas oxygen content, relayed by lambda probe.

This information is processed by a microcomputer in the injection ECU, which calculates base pulse constant using experimentally calculated values mapped in a specific memory of the control unit.

General description of ignition system

The ignition system is inductive discharge type (i.e. without a high tension distributor) with a power module inside the electronic control unit.

An individual coil is fitted for each spark plug (single coil). The advantages of this are as follows:
- lower electrical load
- ensures constant discharge at each spark plug

An ECU memory map contains an entire set of optimal advance settings that could be adopted by the engine throughout its service range according to rpm level and engine load.

These settings were obtained experimentally, through a long series of practical tests carried out on prototypes on an engine test rig. The advance settings able to provide the best compromise between the conflicting requirements of high power with low fuel consumption and exhaust emissions were identified in this way.

These optimal advances were then saved in the system control unit. During engine operation, the control unit is kept continually informed on speed (engine rpm) and load conditions. On the basis of these it selects from its memory the advance value required by the engine and governs the ignition unit power module so that a spark is activated in the spark plug of the cylinder in combustion phase with optimal advance.
The control unit computer also corrects this value on the basis of other factors such as engine temperature, intake air temperature and throttle position in order to obtain an optimal ignition point.

Information needed by the ECU to control the single coils is transmitted by means of electrical signals produced by the following sensors:

a. **Rpm sensor** generates a single-phase alternating current with frequency proportional to rpm.
b. **Air flow meter (debimeter)** converts engine air intake quantity into an electrical signal and sends this to the ECU.
c. **Air temperature sensor** converts intake air temperature to an electrical signal, which is sent to the ECU.

d. **Two knock sensors** located on upper part of the crankcase; one between cylinders 1 and 2 and the other between cylinders 4 and 5. These allow the control unit to identify the cylinder with knock (or about to experience knock) and correct ignition advance only in the spark plug for the affected cylinder.
0. **Throttle valve position sensor** converts throttle angle into an electrical system. This allows the ECU to identify idling, partial and full load conditions.

SYSTEM FUNCTIONS

The ECU controls ignition time and idling air flow in order to allow the engine to run evenly despite fluctuations in environmental parameters and applied loads. It also controls and manages injection so that the stoichiometric ratio (air fuel) is always optimal.

The ECU establishes injector control time by applying a relatively simple rule, which may be summarised as follows.
Assuming fuel physical properties (viscosity and density) and difference between fuel pressure and intake duct vacuum to be constant, the amount of fuel injected depends solely on injector opening time.

The injection-ignition system performs the following essential functions:

- governing injection time;
- adjusting ignition advance;
- cold start control;
- enrichment during acceleration;
- fuel cut-off during over-run);
- controlling and managing engine rpm;
- restricting maximum rpm levels;
- controlling combustion-lambda probe;
- fuel vapour recovery;
- controlling knock
- controlling timing variator
- connection to air conditioner (where fitted);
- connection to automatic transmission (where fitted);
- system self-adaption
- connection with immobiliser;
- automatic diagnosis.

SYSTEM OPERATING STRATEGIES

Digital technology has made it possible to optimise fuel economy and performance by means of programmed rpm and engine load maps memorised inside the ECU.

The control unit is able to control injectors with extreme speed and accuracy. Opening time is computed on the basis of engine load (rpm and air flow). Battery voltage and engine coolant temperature are also considered.
Injection is sequential and phased for each cylinder. The moment of injection is not simultaneous for all cylinders but occurs at the optimal injection point in each case.

Adjusting ignition advance

The ECU uses internal memory maps to compute advance on the basis of engine load (minimum, partial, full, according to rpm and air flow), intake air temperature and engine coolant temperature.

Ignition may be delayed selectively at a required cylinder. This is identified through a combination of values recorded by knock and cam angle sensors.

Cold start control

Under these conditions, the mixture naturally becomes leaner due to poor fuel particle turbulence at low temperatures, reduced evaporation and condensation on the intake manifold inner walls. The situation is exacerbated by higher lubrication oil viscosity.
The ECU recognises this condition and corrects injection time on the basis of coolant temperature, intake air temperature, battery voltage and engine rpm signals.

Copyright Fiat Auto

Ignition time is solely dependent on rpm and engine temperature.

During start-up, the ECU sends a simultaneous command to all injectors (full-group) and switches to normal sequential, phased operation after identifying the phonic wheel reference.

While the engine is warming up, the ECU governs the idle speed actuator to compute the quantity of air required to ensure the engine keeps idling without stalling.
Rpm decreases in inverse proportion to engine speed until rated speed is achieved with the engine warm.

Enrichment during acceleration

When the driver accelerates, if the air flow meter signal increase exceeds a given level, the ECU not only adapts injection to the new requirement but also increases it further to achieve the required rpm level swiftly.

As the required rpm level approaches, the injection increase is gradually eliminated.

NOTE *The acceleration requirement is also measured by a potentiometer on the throttle. This ensures the vehicle can be driven to a Service point under the best possible conditions in the case of a fault in the air flow meter.*

Fuel cut-off during over-run

Fuel cut-off during over-run is adaptive.
With throttle closed and rpm level greater than 1700 (for engine speed lower than 1700 rpm, the Cut-off function is inoperative to maintain optimum driveability). Fuel injection is deactivated.

When the fuel flow ceases, rpm begins to drop at a varying rate according to vehicle driving conditions.

Before reaching idling level, rpm drop rate is checked.
If the fall exceeds a given level, fuel flow is partly restored in accordance with a cushioning strategy designed to prevent the engine stalling when idling (dashpot).
Once this condition is achieved, normal idling functions are restored and cut-off is reactivated only when the fuel cut-off threshold is exceeded to prevent engine working in starts. Fuel restoration and cut-off thresholds vary according to engine temperature.

Another ECU fuel cut-off strategy intervenes during partial deceleration, i.e. when lower engine load is required.
This function is active only if the new situation lasts for a pre-established time and after adapting ignition advance angle to the new situation.

Controlling and managing engine rpm

Idle speed is adjusted under all service conditions by means of a constant idle actuator that acts on the throttle by-pass.
This not only controls idle speed but also acts as additional air box and governor for activation of various appliances (e.g. air conditioning compressor). When the throttle is closed, the actuator governs by-pass gap to compensate for appliance power demand in order to maintain idle speed as constant as possible around a level of 800 rpm.
The actuator fitted to this version ensures extremely prompt adjustment because by-pass opening and closure are both controlled by magnetic coils.
Idle speed is corrected not only by the constant idle actuator but also through ignition angle adjustment (advance) because the latter acts more quickly.

NOTE *The self-adaptive function does away with the need for idle speed adjustment. The butterfly valve case sensor recognises when the throttle is closed and thus corrects any effects of wear on throttle closure position that may arise in time.*

Restricting maximum rpm levels

When the ECU notes that a maximum engine rpm threshold set by the manufacturer has been exceeded, it stops controlling the injectors and thus prevents the engine increasing rpm any further.
When rpm returns to less critical levels, fuel inejction is restored.

Checking combustion - Lambda probe

The lambda probe provides the ECU with data on quantity of oxygen in exhaust emissions and hence correct air-fuel metering
The mixture is optimal when lambda = 1 (optimal stoichiometric mixture). The electric signal sent by the probe to the ECU alters abruptly when mixture composition alters from lambda = 1. When mixture is lean ($\lambda > 1$) the ECU increases fuel quantity and reduces it when the mixture is rich ($\lambda < 1$) In this way, the engine works around an ideal lambda value as far as possible.
The lambda probe signal is processed in the ECU by an integrator that prevents abrupt injection time changes when correcting mixture concentration.
The probe is heated with an electrical coil so that the correct operating temperature can be achieved rapidly (about 300 °C).
This probe is therefore used to adjust fuel combustion with great accuracy. This helps emission control requirements to be met.

Fuel vapour recovery

Fuel vapours (pollutants according to regulations) are collected in a liquid-vapour separator where they condense and return in liquid form to the tank through fuel lines.
The remaining fuel vapours leaving the separator are sent to an active carbon filter and then on to the engine where they are burnt. This is carried out by a solenoid, which is controlled by the ECU only when engine load conditions permit correct fuel combustion without engine operation being affected. The ECU compensates for the amount of fuel injected by reducing flow to injectors.

Controlling knock

This function detects the presence of knock by processing signals from relevant sensors. The ECU continually compares signals from sensors with a threshold level - in turn continually updated to take into account background noise and engine age.
The ECU is thus able to detect the presence of knock (or imminent knock) and reduce the injection advance until the effect disappears. The advance is then gradually restored to original levels.
When accelerating, a higher threshold is used to take into account increased engine noise in these circumstances. The knock control strategy is also self-adaptive. This means that advance reductions repeated regularly are memorised in order to adjust mapping to the range of conditions experienced by the engine.

Controlling timing variator

The ECU controls the timing variator solenoid according to engine load level. If engine load exceeds a given threshold, the ECU sends a signal to the solenoid which in turn allows the variator to reduce intake setting distribution graph by 18° (intake valve camshaft turned through 9°).
When engine load drops below a given threshold, the ECU deactivates the solenoid and the variator restores inlet timing to previous basic values.
The timing variator is naturally controlled with a hysteresis field, i.e. the solenoid activation solenoid is always higher than the deactivation threshold. This prevents situations of balance and hence an over-rapid changeover between one distribution graph and another with significant operating anomalies.

Copyright Fiat Auto

Connection with heating/ventilation system

When the air conditioner is turned on, the compressor takes up power from the engine, which tends to stall when idling. To prevent this, the ECU adjusts air flow to the new power requirement by controlling the relevant actuator (adjustment also occurs under other conditions to maintain optimal driveability). The system also cuts-off the supply to the compressor momentarily if the engine is subject to high power demands (strong acceleration).

Connection to automatic transmission

The ECU governs idle speed according to load imposed when the selector lever is moved to a new gear.

System self-adaption

The ECU features a self-adaptive function able to recognise changes occurring in the engine due to settling and component/engine ageing.
Such changes are memorised in the form of changes to the basic maps and serve the purpose of adapting system operation to gradual changes in engine and components with regard to the original specification.
This adaptive function also compensates for inevitable differences (due to manufacturing tolerances) between replacement parts. This allows the vehicle to operate as efficiently as possible without the need for specific adjustments and checks.
The self-adaptive parameters are lost if the ECU is disconnected.

Connection with immobiliser

For extra protection against theft, the vehicle is fitted with an immobiliser that allows injection-ignition system activation only when an electronic code is entered.
Each time the key is turned to STOP, the immobiliser system deactivates the injection-ignition ECU completely.
When the ignition key is turned to MAR, the following operations take place in order:

1. The injection-ignition ECU asks the immobiliser ECU for a secret code in order to deactivate the function lock.
2. The immobiliser ECU responds by sending the secret code only after receiving an identification code transmitted by the ignition key, which is fitted with a special transponder.
3. Identification of the secret code allows deactivation of the function lock and the injection-ignition ECU is able to activate the normal system management program.

A special bidirectional serial line allows exchange of information between injection-ignition ECU and immobiliser control unit.
If the immobiliser system is faulty, the engine can still be started using an emergency procedure.



It is absolutely forbidden to exchange control units between different vehicles to check their efficiency.
During testing, before replacing a control unit, check that it is really faulty: activation of a new control unit will lead to memorisation of a secret code which will render the unit completely unusable on other vehicles.

Automatic diagnosis

The Motronic M 2.10 injection-ignition system features an**automatic diagnosis**" function able to memorise sensor and actuator faults in order to facilitate subsequent identification and correction. Faults appear on the infocenter display.
The system can be subjected to comprehensive fault diagnosis through active dialogue with a Fiat/Lancia tester.

If sensor faults are detected, the ECU replaces the signal from the faulty sensor with a setting from its memory **(recovery)** to keep the engine running. Once detected, the fault is saved permanently in the memory and the sensor excluded from the system until the signal is again compatible.

The same procedure is applied if the fault affects an actuator or control port. The infocenter indicates a fault when a fault is detected and replaced with a recovery setting.
The following parameters may be managed by the ECU in case of failure: debimeter, idle adjustment actuator, coolant temperature sensor, butterfly valve position sensor, lambda probe, air temperature sensor, battery voltage and knock sensors. In the case of faults in ECU, timing sensor or injectors, the system does not identify the fault and the vehicle stops. If required, the faults may be read off ECU using a Fiat/Lancia Tester.

Recording faults:

This is carried out while implementing baseline sensor/actuator management function.

Memorising error and structure of error memory:

The ECU memorises errors in the order they occur. The following are memorised for each error: error location and type, 2 environmental conditions (specific for each fault type) measured at moment fault occurs - and a frequency count.

Defect classification:

If a defect is identified for the first time and error status persists for time t > 0.5s, the defect is memorised as "permanent". If the defect subsequently disappears, it is memorised as "intermittent" and "not present". If the fault then reappears, it is memorised as "intermittent", but now becomes "present".

Classifying a fault as "permanent" activates the recovery functions. When the fault reappears, the normal reading or implementation function is restored when the fault disappears.
Some fault types are classified as "important", i.e. significant in terms of emission control regulations. An infocenter tells the user when these faults are present.

Frequency counter:

A frequency counter is assigned to each error. This is used to determine the moment at which a fault that is no longer present occurred. The counter is set to 10 when a fault is first detected. If the fault disappears, the counter remains at its current level. If the fault reappears, the count is increased by 1 (up to a top limit of 60).

The count decreases each time the vehicle is started without the fault reappearing. If the count reaches zero, the fault is automatically deleted from the memory.
If the fault reappears after the count has decreased, the counter is set to 10 (but remains unchanged if already higher than 10).

Fault indication

The infocenter indicates a fault when a defect is saved as "present" and "important".

Deleting errors:

When the frequency counter reaches 0, the fault and associated parameters are deleted.

The entire error memory is deleted immediately in the following cases:
- "delete error memory" command sent by tester;
- supply to control unit cut off (by disconnecting battery or control unit connector).

Active diagnosis:

This is carried out upon a command by the Fiat Tester. The following may be activated: injectors, fuel vapour solenoid, idle actuator, a/c compressor relay (if present) and timing variator solenoid.

Copyright Fiat Auto

RECOVERY STRATEGIES

Debimeter

Recovery: if no error is noted simultaneously for throttle potentiometer, idling engine load is computed according to rpm level. If a simultaneous error is noted in the throttle potentiometer, engine load and advance values are allocated by reference to a table and according to rpm.
Additional measures: mixture and idling level self-adaption blocked at current values.

Water temperature sensor

Recovery: if air T $\leqslant$ 19,9 °C, engine T assumed = Air T for three minutes. Subsequently engine T = 80 °C. If air T $\geqslant$ 19.9 °C, engine T = 80 °C immediately.
Additional measures: mixture and idle level self-adaption blocked at current values.

Air temperature sensor

Recovery: air T assumed to be = 20.4 °C
Additional measures: mixture self-adaption blocked at current levels

Throttle potentiometer

Recovery: fixed throttle opening angle assumed = 10°
idle status: air flow < 8 m3/h;
exit from minimum status: air flow > 8 m3/h;
full load status: engine load > 6.5 ms and simultaneous rpm > 2000 RPM;
exit from full load status: engine load < 6.5 ms or rpm < 2000 RPM.
Additional measures: gradual rpm decrease at idle speed (dashpot) and idle self-adaption strategies are blocked.

Engine idle speed actuator

Recovery 1: valve in recovery position, close to idle air flow for:
- d.c. battery V on opening or closure windings or opening and closure winding;
- a.c. on opening or closure windings or opening and closure windings;
- c.c. battery V on opening winding and a.c. on opening winding
- d.c. Battery V on closure winding and a.c. on opening winding.

Recovery 2: valve opened 0% for:
- d.c. Battery V on opening winding and d.c. GND on closure winding;
- a.c. on opening winding and d.c. GND on closure winding.

Recovery 3: valve open 50% for:
- d.c. GND on opening or closure or opening and closure windings

Recovery 4: valve open 100% for:
- d.c. battery V on closure winding and d.c. GND on opening winding;
- a.c. on closure winding and d.c. GND on opening winding.

Additional measures: idle self-adaption blocked at current values and idle control blocked.

Lambda probe

Recovery: the lambda signal is ignored (open loop) for probe voltage > 1.099 V or between 0.400 and 0.518 V for longer than 2.55 s.
Probe voltage concentration self-adaption blocked < 0.0879 V for longer than 2.55 s.
Open loop, max. value of lambda integrator (FR) taken as last effective probe voltage reading < 0.0879 V and simultaneously FR = 1.4.
FR blocked at limit value reached for FR > 1.25 or < 0.75 for at least 15 s.

Battery voltage

Recovery: idle self-adaption and concentration blocked at current values for voltage > 16.01 V or < 10 V.

Knock sensor

Recovery: ignition advance computed on the basis of water temperature and air temperature.

BOSCH MOTRONIC M 2.10 SYSTEM COMPONENTS

The Bosch Motronic M 2.10 injection-ignition system is made up of four interdependent circuits:

A. Fuel supply circuit
B. Air intake circuit
C. Electric/electronic circuit
D. Circuit for checking harmful exhaust emissions

Two additional devices and circuits closely connected to the injection-ignition system are designed to reduce harmful vehicle emissions to bring them into line with USA'83 standards and the more stringent EEC stage 2 regulations. These are as follows: **fuel evaporation control and vapour recovery circuit; crankcase vapour recirculation and recovery circuit.**

A. FUEL SUPPLY CIRCUIT

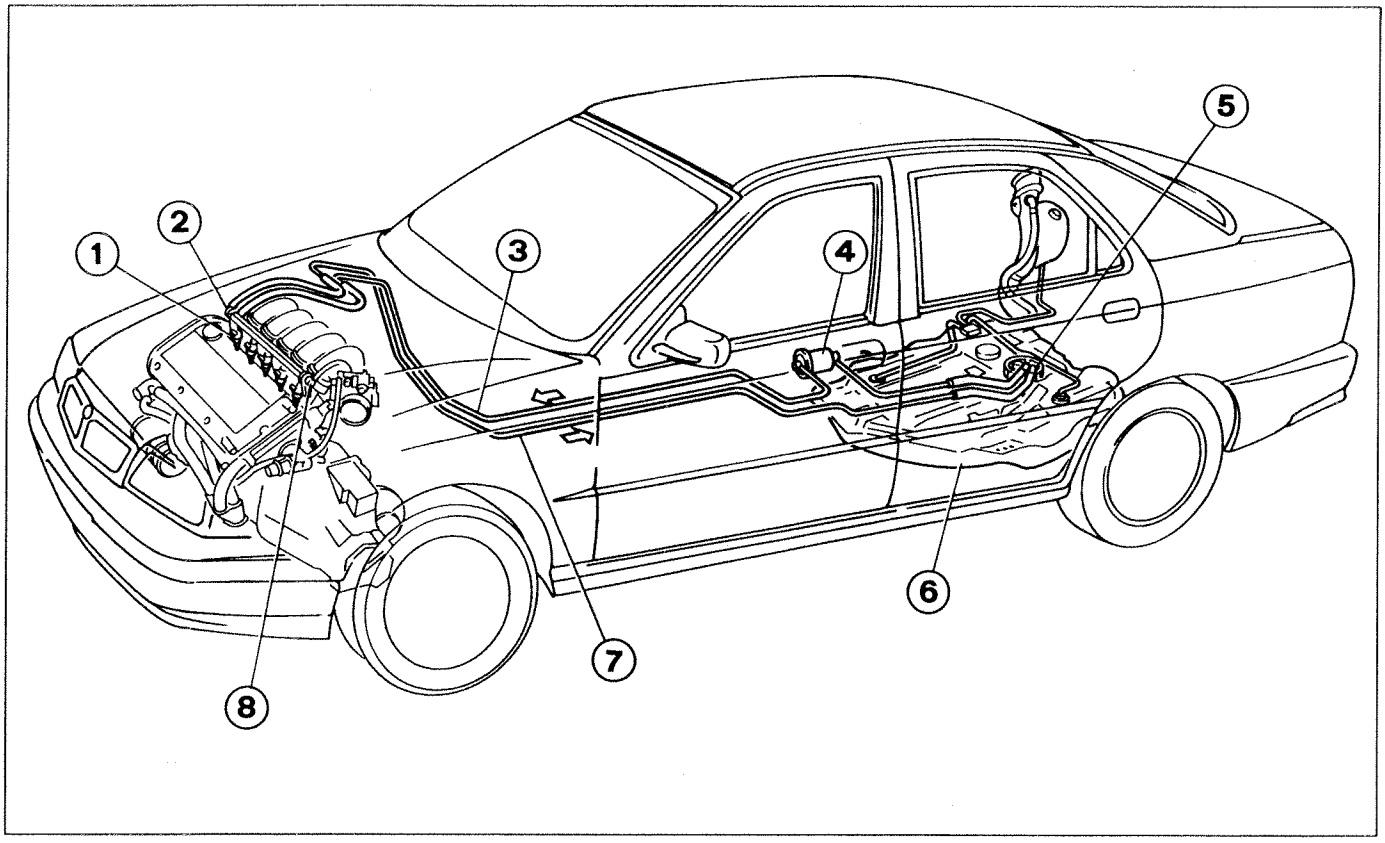

P3U09CX01

A pump submerged in the fuel tank takes up fuel and directs it to the filter and injectors.

Fuel delivery pressure to the injectors is maintained constant and proportional to pressure level in the intake manifold by the pressure regulator, which acts on fuel flow to maintain a constant pressure gap to the injectors.

Excess fuel is allowed to flow back, unpressurised, from pressure regulator to tank.

The main components of the fuel feed circuit are as follows:

1. Injectors
2. Fuel manifold
3. Delivery circuit
4. Fuel filter
5. Electric fuel pump
6. Tank
7. Return circuit
8. Pressure regulator

Copyright Fiat Auto

ELECTRIC PUMP

The submerged suction head fuel pump is located inside the pump, housed in a support on flexible mounts. The pump is chamber with roller type, operated by an electric motor with permanent magnet exitation, submerged in the fuel pump.
A disc rotor (1) located eccentrically in the pump case contains metal rollers (2) in chambers around its circumference. These are pushed against the outer race by centrifugal force in order to ensure a watertight seal.

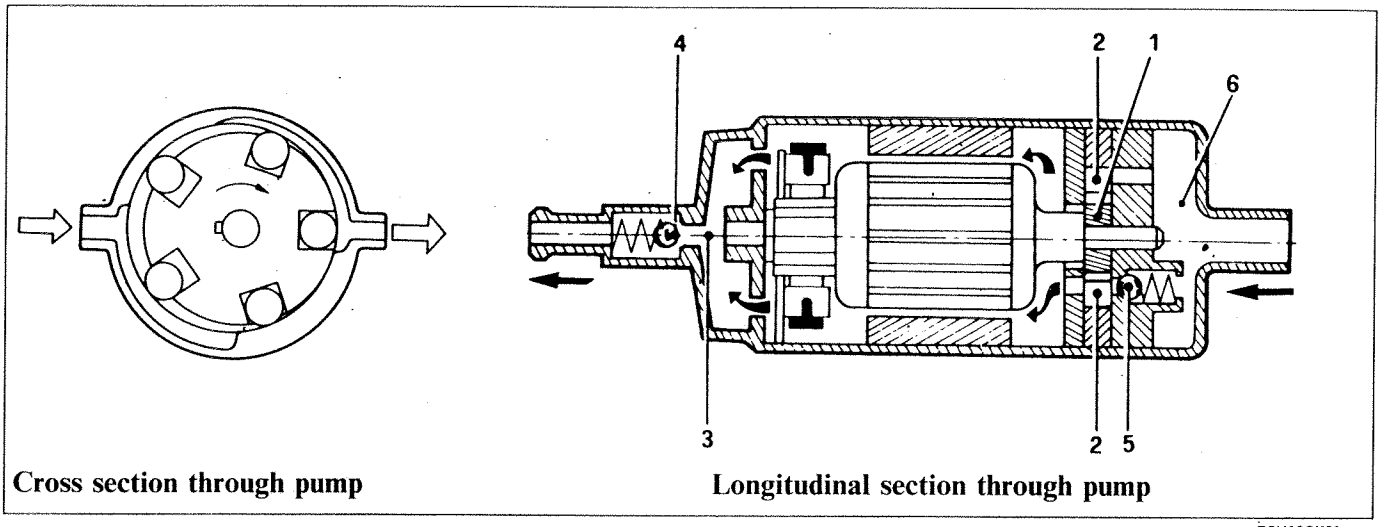

Cross section through pump **Longitudinal section through pump**

P3U10CX01

The fuel flows into the empty compartments and is compressed in outlet duct (3). Check valve (4) prevents the outlet pipe emptying with the engine off.
Pressure relief valve (5) short circuits the flow to intake chamber (6) when the pressure exceeds 7.5 bar.

The electrical pump begins to operate when the ignition switch is moved to AVV. Once start-up is over, the pump continues to operate with the igntion switch turned to MAR, unless engine speed drops below 225/min, or the ignition switch is turned back to STOP.

If the engine stops for any reason, with igntion switch in MAR position, pump operation stops automatically for safety reasons.

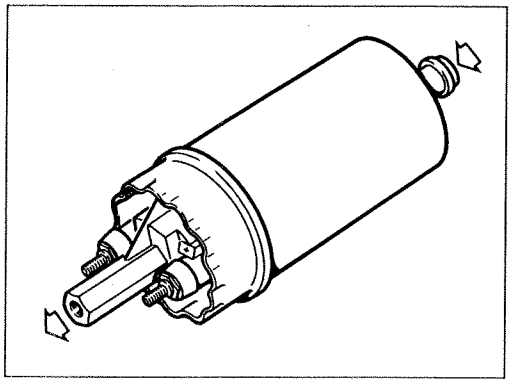

P3U10CX02

Longitudinal perspective section through fuel pump and external view

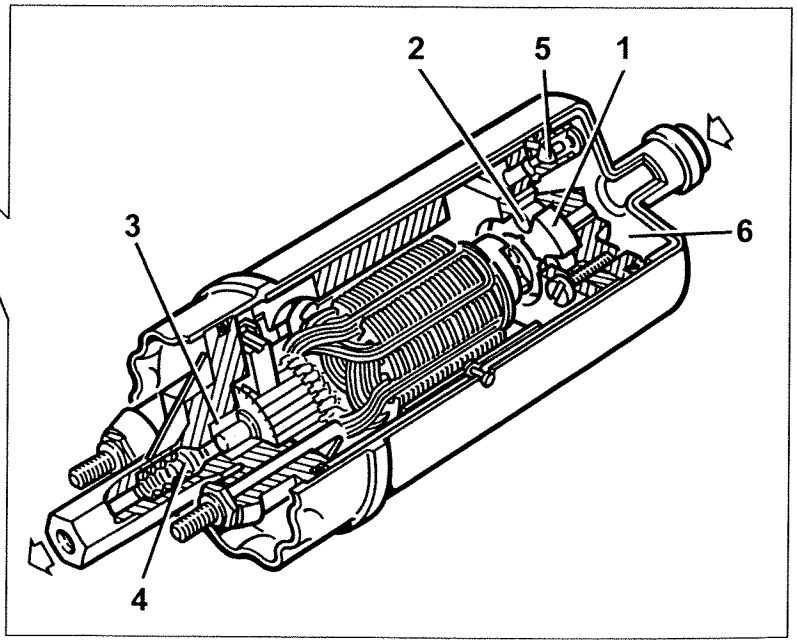

P3U10CX03

FUEL FILTER

The fuel filter is fitted under the floor pan.
It is paper type with high filter capacity, essential due to the sensitivity of the injectors to foreign bodies.

Longitudinal perspective section through fuel filter and external view

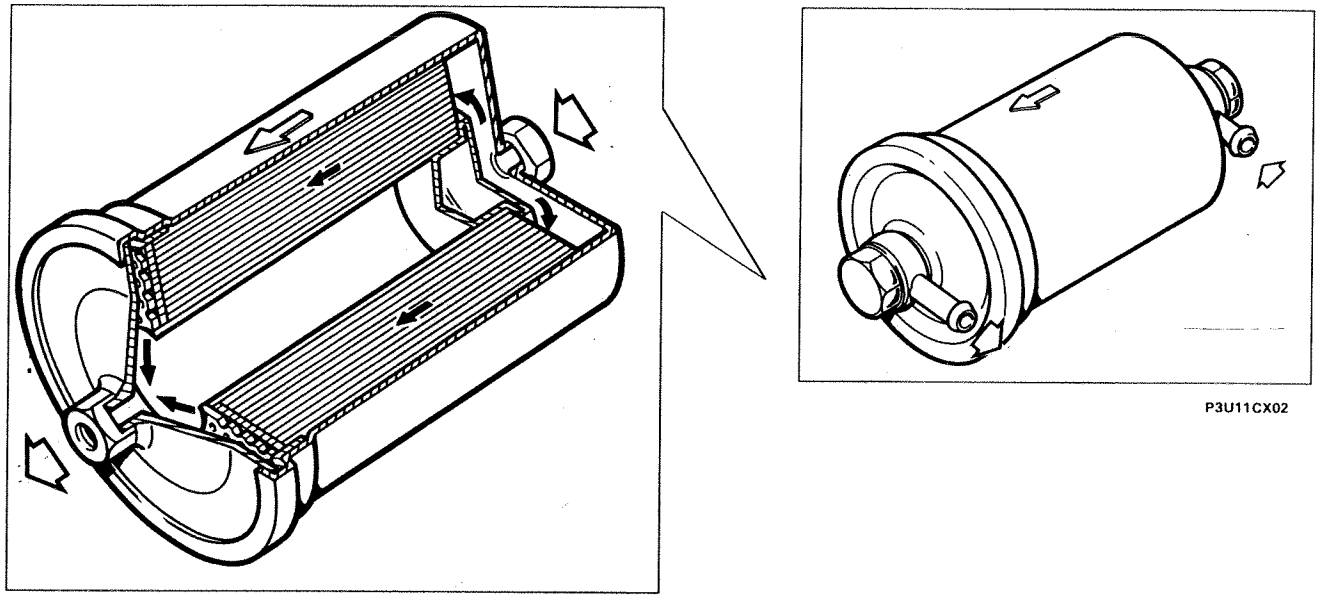

P3U11CX02

P3U11CX01

FUEL MANIFOLD TO INJECTORS AND PRESSURE REGULATOR

The fuel manifold distributes fuel to the injectors. It is made out of sheet steel and fitted with housings for injectors and pressure regulator, with fuel outlet and inlet fittings.

The fuel manifold is fastened to the intake manifold by means of four brackets.
The pressure regulator is necessary for maintaining a constant pressure gap to injectors.
It is a differential, diaphragm device and set to a pressure of about 3 bar during manufacture.

The pressure regulator consists of a metal case that contains a mobile unit made up of metal body (8) and membrane (4) loaded by spring (5). After overcoming a set force, made up of the vacuum on the other side of the membrane and load of spring (5), the fuel pushed by the pump opens valve (7) to allow excess fuel to flow through pipe (2) to the tank.

The spring housing chamber communicates with the engine intake duct (6) (vacuum signal). This feature maintains a constant difference between fuel pressure and intake manifold vacuum throughout all engine service conditions.

Copyright Fiat Auto

10.

Longitudinal section through fuel supply manifold and pressure regulator

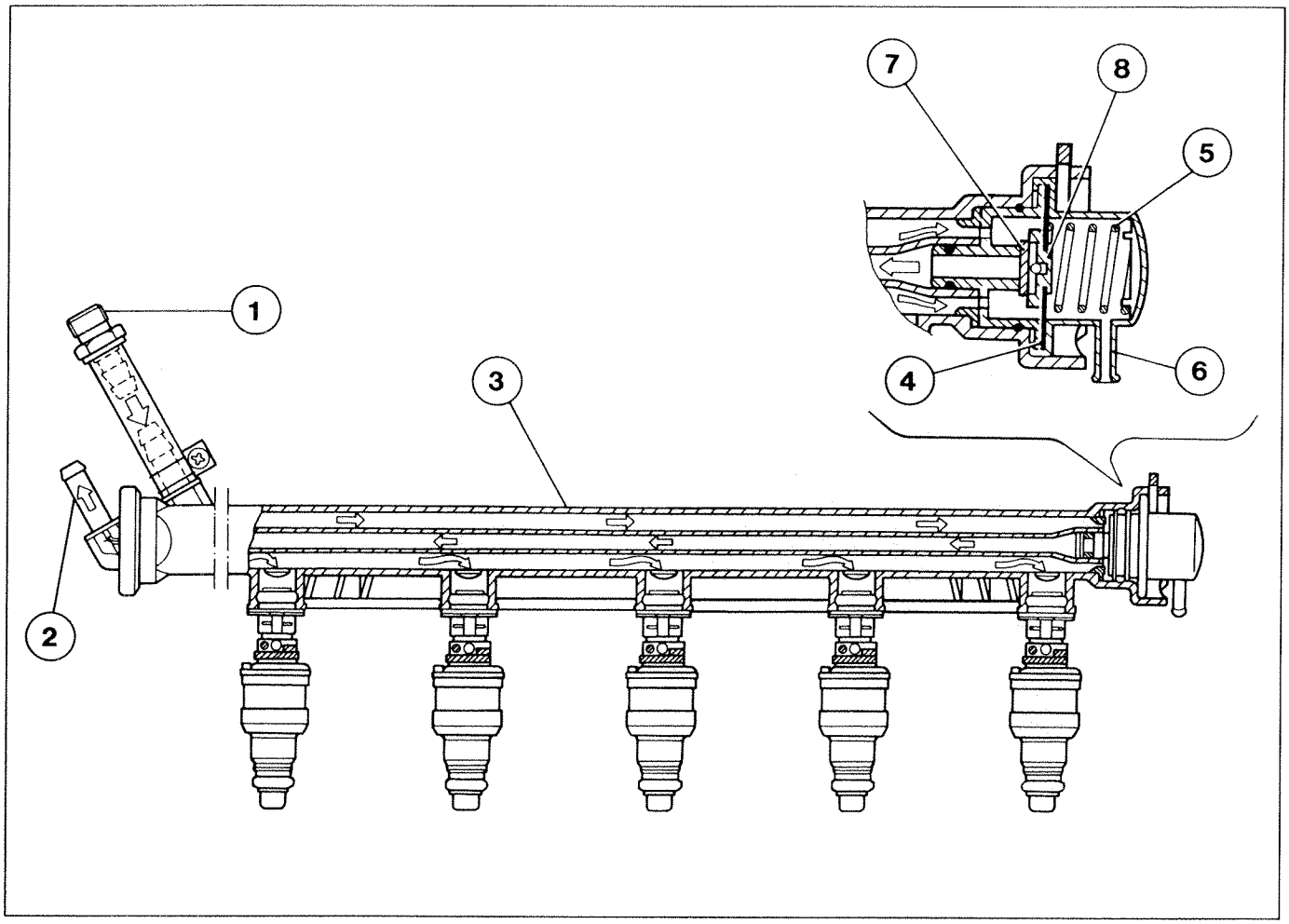

1. Fitting connected to fuel inlet line
2. Fitting connected to fuel return line
3. Injector and fuel manifold mount
4. Membrane with reflux valve
5. Regulating spring
6. Pipe connected to vacuum in intake manifold
7. Reflux valve
8. Metal case

INJECTORS

The twin jet injectors are fitted on the intake ducts, immediately before the intake valve.

These injectors are specific to 4 valve per cylinder engines because they allow sprays to be directed toward the two intake valves.
Fuel sprays emerge from the injector at a differential pressure of 3 bar and nebulise instantly to form two cones of about 10° each.
Fuel is injected into the intake duct of each cylinder upstream of the intake valve.

Injector control is «phased, sequential», i.e. the five injectors are controlled in the same order as the engine cylinder intake. The supply to each cylinder may begin at any time from the expansion stage to when intake has already begun.
The injectors are held in their seats by the fuel manifold. They are also secured to the fuel manifold by safety clips. Two o-rings (10) and (11) seal the intake duct and fuel manifold.

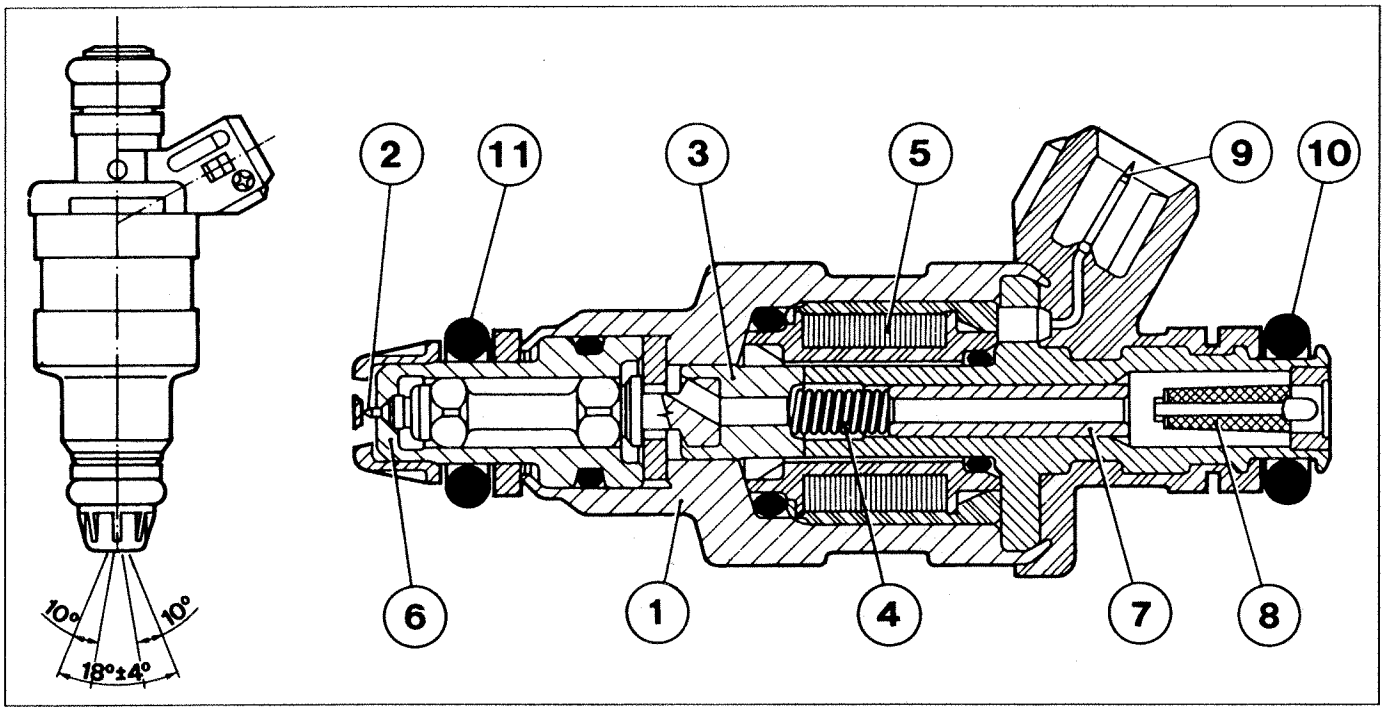

P3U13CX01

1. Injector case
2. Pintle
3. Magnetic core
4. Coil spring
5. Winding
6. Injector tip
7. Adjustable spring driver
8. Fuel filter
9. Electrical connection socket
10. Rubber fuel seal ring
11. Rubber vacuum seal ring

Electrical specifications

Supply voltage 6-16 Volt
Electrical resistance 16.2 Ω
Minimum activation time 2.5 msec at 14 V
Service temperature - 40 °C + 120 °C
Spray range 10°
Total angle covered by sprays 18° ± 4°

Copyright Fiat Auto

B. AIR INTAKE CIRCUIT

This consists of the following parts:

- Throttle case;
- Engine idle speed actuator;
- Throttle valve position sensor
- Air temperature sensor
- Air flow meter (debimeter)

AIR INTAKE CIRCUIT DIAGRAM

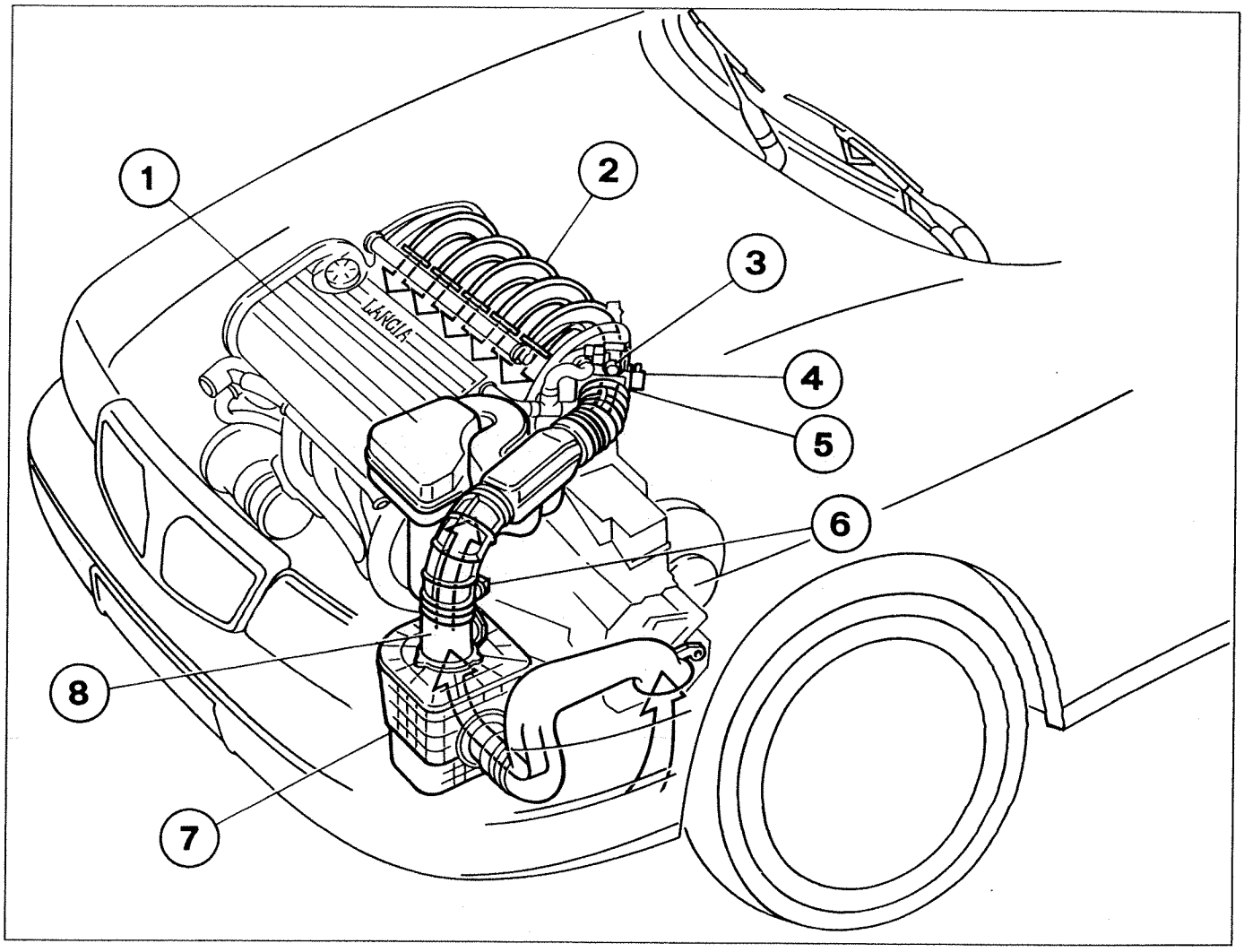

P3U14CX01

1. Resonator
2. Intake manifolds
3. Engine idle speed actuator
4. Throttle position sensor
5. Throttle case
6. Air temperature sensor
7. Filter case
8. Hot film debimeter

THROTTLE CASE

The amount of air taken in is determined by the opening of a throttle at the beginning of the intake manifold. The throttle is controlled by the accelerator pedal. Air necessary to keep the engine idling (with throttle closed) and appliances activated is regulated and by-passed solely by the engine idle speed actuator.

The arrowed screw is used to adjust throttle closure correctly in order to prevent fouling against the surrounding circuit; this screw should not be used to adjust idle because it is set by flushing during manufacture and must never be tampered with.

Coolant flows from thermostat through inlet and outlet ports (3) and (5) within butterfly valve area to prevent condensation and formation of ice that could occur under certain conditions with low outdoor temperature and/or high humidity.

Gases leaking from the crankcase enter the intake manifold downstream of the throttle through PCV valve (4).

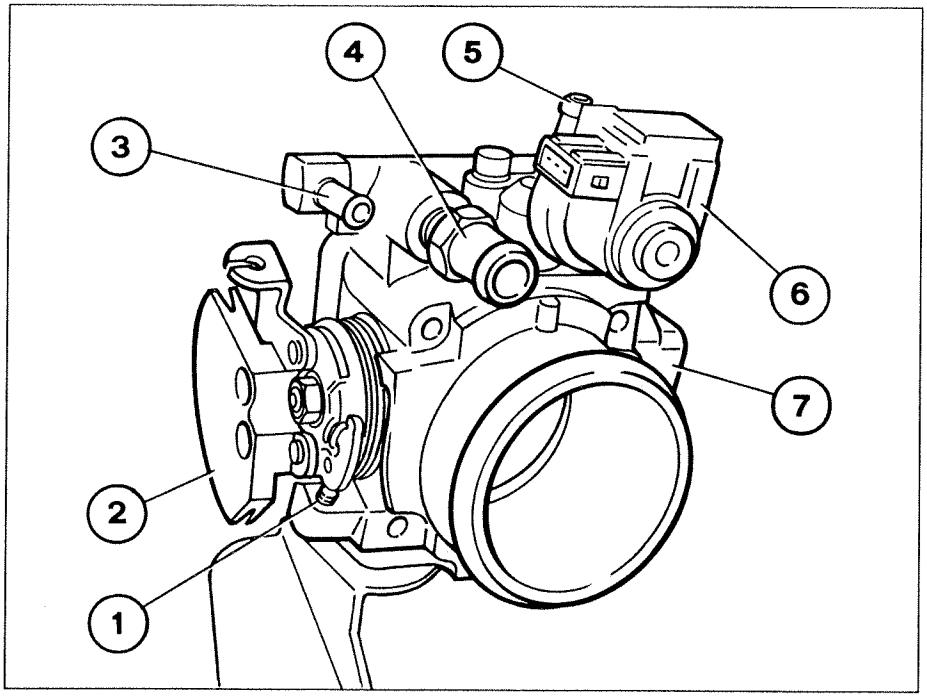

P3U15CX01

1. Butterfly valve adjustment and antibind screw **(do not touch)**
2. Throttle linkage
3. Attachment for coolant delivery line
4. Attachment for crankcase vapour recycling and recovery line
5. Attachment for coolant return line
6. Engine idle speed actuator
7. Throttle position sensor

Copyright Fiat Auto

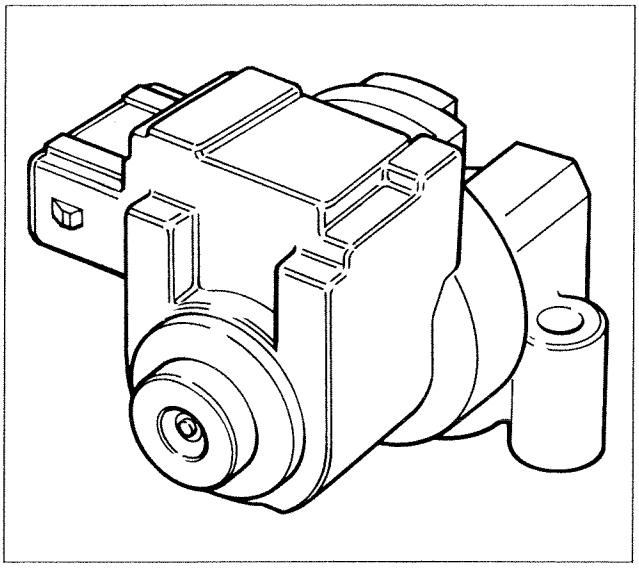

P3U16CX01

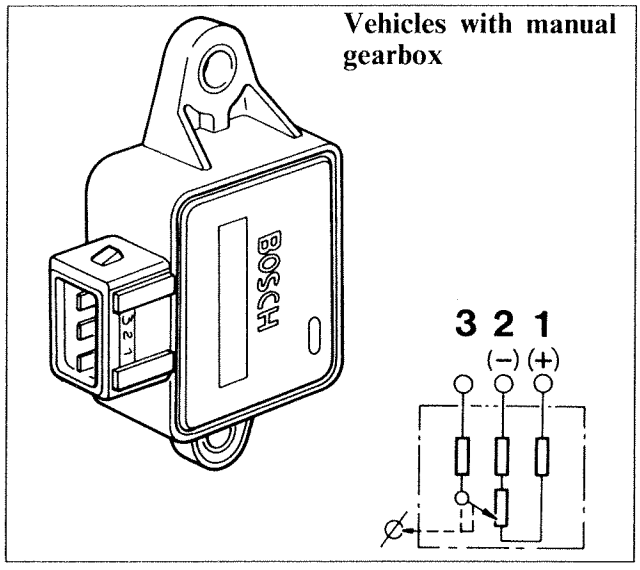

P3U16CX02

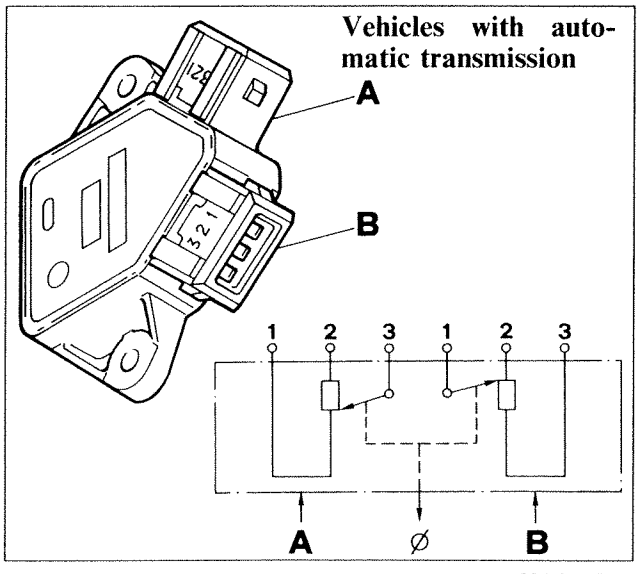

P3U16CX03

ENGINE IDLE SPEED ACTUATOR

This consists of an electric motor. By opening supplementary air passage - in parallel with leakage flow from throttle (with accelerator released) - in the throttle case by varying amounts, this keeps engine idle speed constant automatically regardless of engine load (supplementary appliances on or off, engine warm or cold etc.).

The passage opening brought about by distributor rotation is governed by electrical pulses processed by a special section of the injection ECU, which turns the distributor one way or another according to engine speed.

THROTTLE VALVE POSITION SENSOR

This takes the form of a potentiometer with its mobile part controlled directly by the butterfly valve spindle.
During operation, the injection-ignition control unit supplies the potentiometer at a voltage of 5 volts, applied to pins (1) and (2).
Pin 3 receives a voltage inversely proportional to butterfly valve opening. According to voltage sent by pin 3, the ECU identifies butterfly valve position and corrects mixture concentration accordingly.

With throttle closed, an electrical signal of about 0.5 Volt reaches the ECU, which identifies idle and cut-off conditions (on the basis of engine rpm).

The potentiometer automatically recognises the throttle fully closed position through its self-adaptive function. This does away with the need for potentiometer adjustment and takes into account the effect of wear on the throttle closure position.

On versions with automatic transmissions, the sensor consists of two potentiometers, each with its own connector. Potentiometer A is connected to the injection-ignition ECU as described previously for versions with manual transmission.
Potentiometer B is connected to the automatic transmission (a.t.) ECU. During operation, the a.t. ECU supplies potentiometer B at a voltage of 5 Volt applied to pins 2 and 3. Pin 1 receives a voltage directly proportional to butterfly valve opening angle.

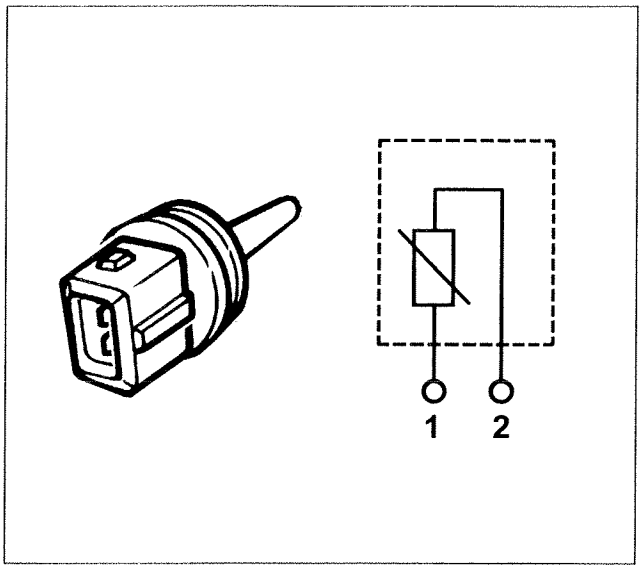

P3U12BX01

AIR TEMPERATURE SENSOR

The intake air temperature sensor is separate from the air flow meter on this version. It is a normal negative temperature coefficient (NTC) sensor with resistance level inversely proportional to air temperature.

Because the ECU intake circuit is designed as a voltage divider, voltage is divided between a resistance in the ECU and sensor NTC resistance. The ECU is thus able to assess sensor resistance changes through voltage changes and obtain temperature data in this way.

DEBIMETER

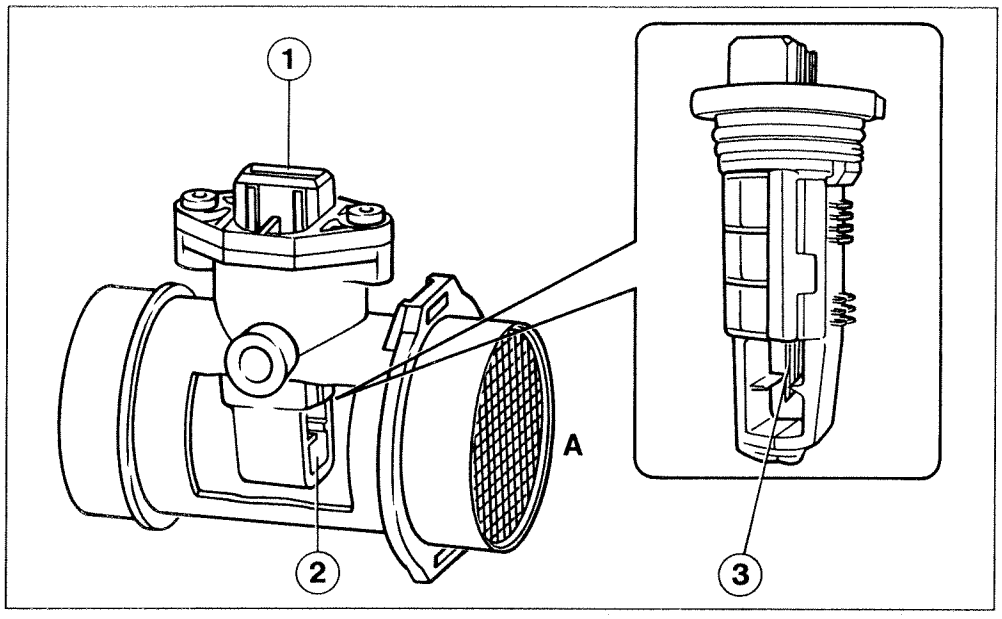

P3U17CX01

1. Connector
2. Measuring channel
3. Hot film sensor

A = Air intake

The air flow meter is of the new hot film type. In this system, a heated film is placed in a measuring channel through which flows air from the engine air intake.

The film is maintained at a constant temperature (~ 120 °C) by an adjacent heating coil.

The mass of air flowing through the measuring channel tends to remove heat from the film. In order to keep the film at a constant temperature, a given current must flow through the heating coil. This current is measured using a Wheatstone bridge

The measured current is therefore proportional to the flowing air mass.

Copyright Fiat Auto

C. ELECTRIC/ELECTRONIC CIRCUIT

Connects all Bosch Motronic M 2.10 injection/ignition system components and provides them with electricity.
It consists mainly of an **electronic control unit** (ECU) and the following parts:
- Three main control relays
- Two protection fuses (electric fuel pump and lambda probe)
- Throttle valve position sensor
- Coolant temperature sensor
- Fuel pump submerged in tank
- Five injectors
- Intake air flow meter (debimeter)
- Inlet air temperature sensor
- Engine idle speed actuator
- Rpm sensor
- Timing sensor (cam angle)
- Two knock sensors
- Five single coils and respective spark plugs
- Speedometer sensor
- Lambda probe

Injection-ignition ECU (control unit)

The Bosch Motronic M 2.10 injection-ignition system fitted is specific to this version.

It consists of hybrid thick film circuits and is connected to the electrical wiring by means of a multiple **55 way** (or pole) connector.
These receive data on all engine service conditions from the various sensors:

- intake air quantity
- inlet air temperature
- coolant temperature
- engine rpm
- cam angle
- throttle valve position
- vehicle speed signal
- knock sensor
- lambda signal

The ECU is able to achieve the following objectives through the use of the above data and with the aid of typical programs written into its permanent memory:

1. Manage injection frequency and time; in other words, supply a calculated amount of fuel to each cylinder by means of a sequential, phased command (1-2-4-5-3).
   In practice, the air/fuel ratio must always be within optimal limits. These are defined during engine set-up with the aim of limiting fuel consumption, reducing harmful exhaust emissions and optimising engine thermodynamic efficiency.
2. Control ignition point electronically (ignition advance)
3. Control air flow at given rpm through a specific sensor in order to allow engine to run evenly even when environmental conditions and applied loads vary.
4. Run special programs to record operating defects in sensors recorded in RAM memory and replace incorrect data or data not received with replacement values to ensure engine operation even under emergency conditions (RECOVERY).
5. Provide data on operating defects recorded and saved through a serial line to a Fiat/Lancia tester (tester point).

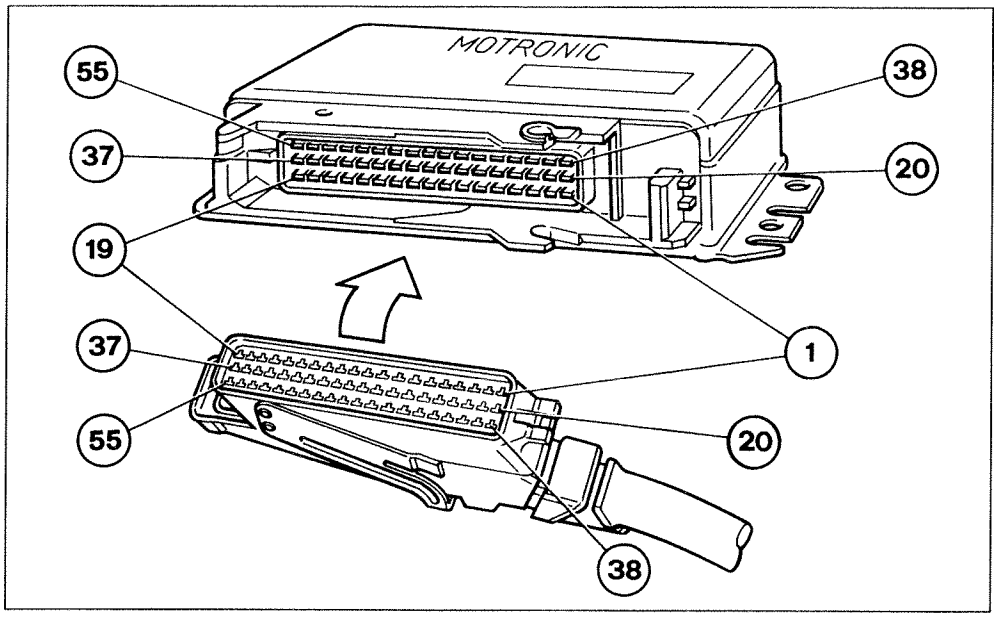

P3U19CX01

Identifying connections on control unit

1. Cylinder 1 ignition control
2. Earth on engine
3. Fuel pump relay and lambda probe enablement
4. Engine idle speed actuator
5. Fuel vapour cut-off solenoid
6. Engine rpm signal output (rpm control)
7. Air flow meter signal
8. Timing sensor signal
9. Vehicle speed signal input
10. Lambda probe earth
11. Knock sensor signal
12. Timing sensor and butterfly valve potentiometer supply
13. Not connected
14. Earth on engine
15. Cylinder 5 injector control
16. Cylinder 2 injector control
17. Cylinder 1 injector control
18. Direct battery supply (+30)
19. Earth on engine
20. Cylinder 2 ignition control
21. Cylinder 3 ignition control
22. Engine idle speed actuator
23. Not connected
24. Earth on engine
25. Not connected
26. Air flow meter earth
27. Locked power source (+15)
28. Lambda probe signal
29. Knock sensor signal
30. Sensor supply: air temperature, coolant temperature, knock andthrottle valve position
31. Not connected
32. a/c compressor relay signal output
33. Not connected
34. Cylinder 4 injector control
35. Cylinder 3 injector control
36. System supply relay enablement
37. Positive (+30) from system relay
38. Cylinder 4 ignition control
39. Cylinder 5 ignition control
40. A/c signal input
41. A/c signal input
42. Earth on engine (speed engaged signal input for automatic transmission)
43. Not connected (speed engaged identification signal output for automatic transmission)
44. Not connected
45. Coolant temperature sending unit signal
46. Not connected
47. Not connected
48. Rpm sensor
49. Rpm sensor
50. Not connected
51. System failure indicator
52. Timing variator solenoid relay enablement
53. Butterfly valve position sensor
54. Coolant temperature sending unit signal
55. Two-way line with immobiliser ECU (fault diagnosis line K)

Copyright Fiat Auto

ELECTRICAL CONNECTIONS BETWEEN ECU/SENSORS AND ACTUATORS

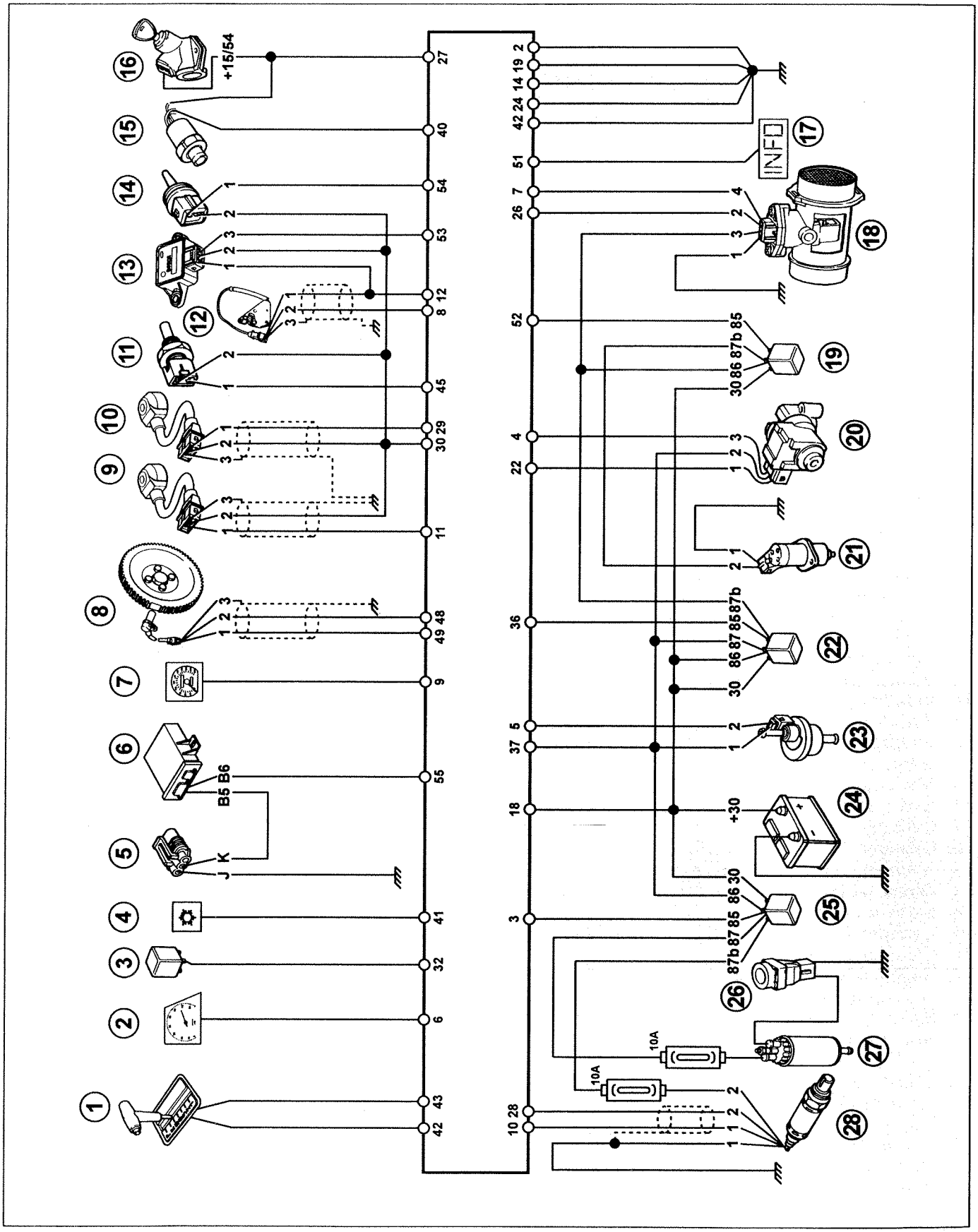

P3U20CX01

CONNECTIONS BETWEEN ECU/IGNITION COILS AND INJECTORS

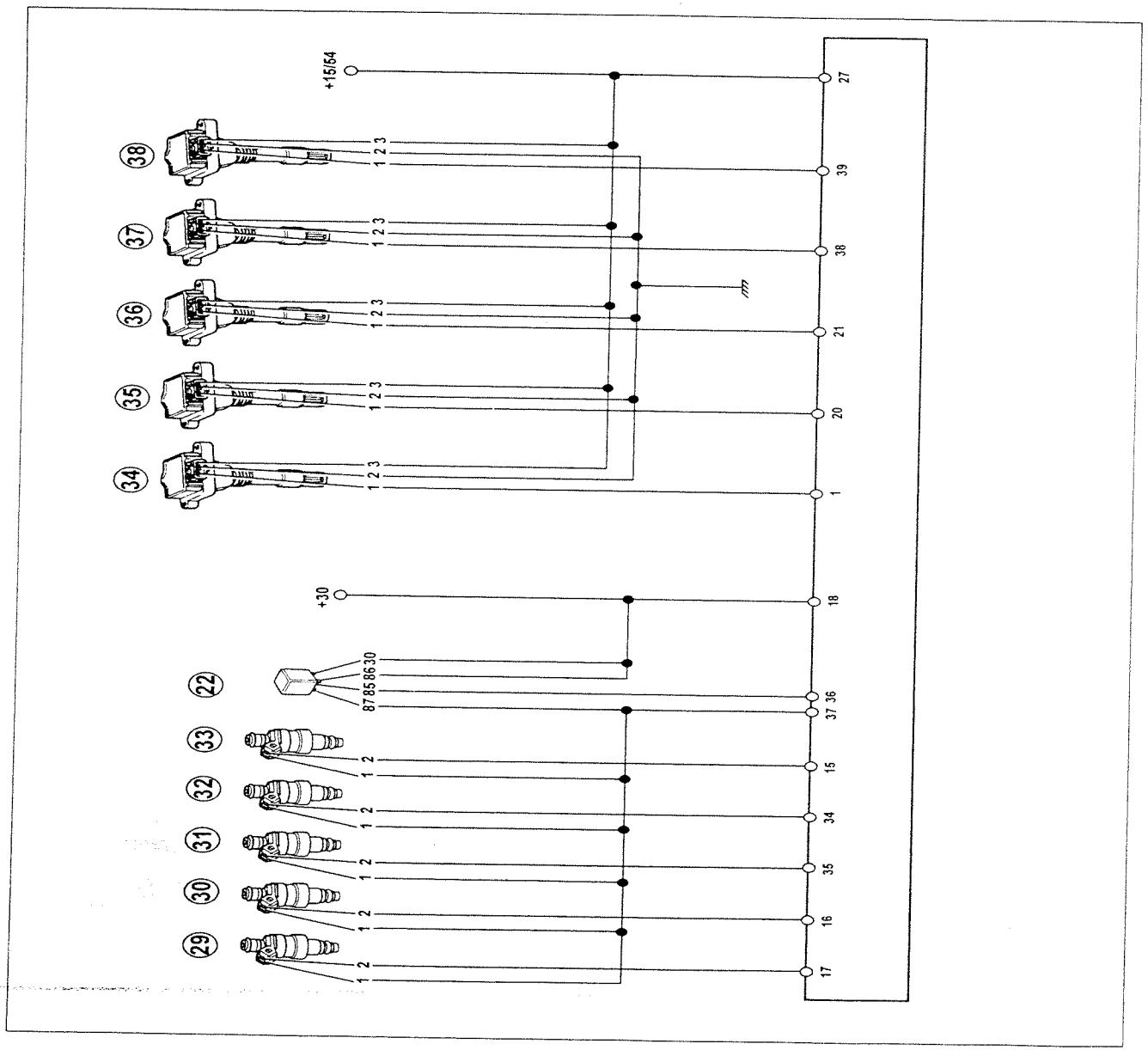

P3U21CX01

ECU wiring diagram

Key:

1. Automatic transmission
2. Rev counter signal
3. Air conditioner relay
4. Air conditioner control button
5. Fiat/Lancia Tester fault diagnosis point
6. Immobiliser control unit
7. Speedometer signal
8. Rpm and TDC sensor
9. Knock sensor 1
10. Knock sensor 2
11. Water temperature sensor
12. Timing sensor
13. Throttle position sensor
14. Intake air temperature sensor
15. Three stage pressure switch
16. Ignition switch
17. Infocenter
18. Debimeter
19. Timing variator solenoid relay
20. Engine idle speed actuator
21. Timing variator control solenoid
22. I.e. system supply relay.
23. Fuel vapour solenoid
24. Battery
25. Fuel pump contactor and lambda probe
26. Inertia switch
27. Electric fuel pump
28. Lambda probe
29. Cylinder no. 1 injector
30. Cylinder no. 2 injector
31. Cylinder no. 3 injector
32. Cylinder no. 4 injector
33. Cylinder no. 5 injector
34. Cylinder no. 1 ignition coil
35. Cylinder no. 2 ignition coil
36. Cylinder no. 3 ignition coil
37. Cylinder no. 4 ignition coil
38. Cylinder no. 5 ignition coil

Copyright Fiat Auto

LOCATION OF COMPONENTS IN ENGINE BAY

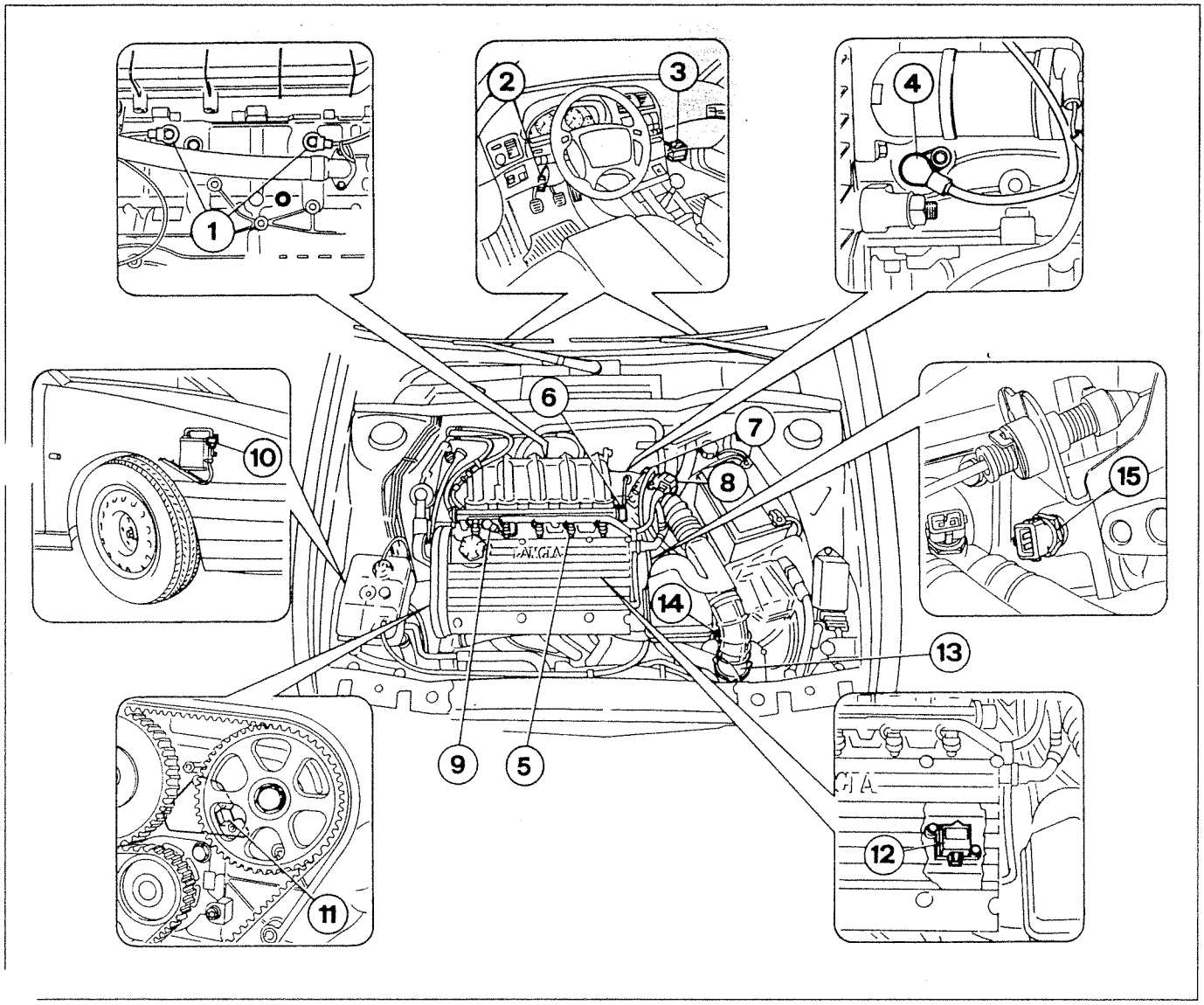

P3U22CX01

Key:

1. Knock sensors
2. Diagnostic socket
3. Injection-ignition ECU
4. Rpm and TDC sensor
5. Injectors
6. Fuel pressure regulator
7. Throttle position sensor
8. Engine idle speed actuator
9. Timing variator control solenoid
10. Fuel vapour solenoid
11. Timing sensor
12. Single coils
13. Air flow meter (debimeter)
14. Intake air temperature sensor
15. Coolant temperature sensor

DIAGRAM SHOWING ECU DATA INPUT AND OUTPUT

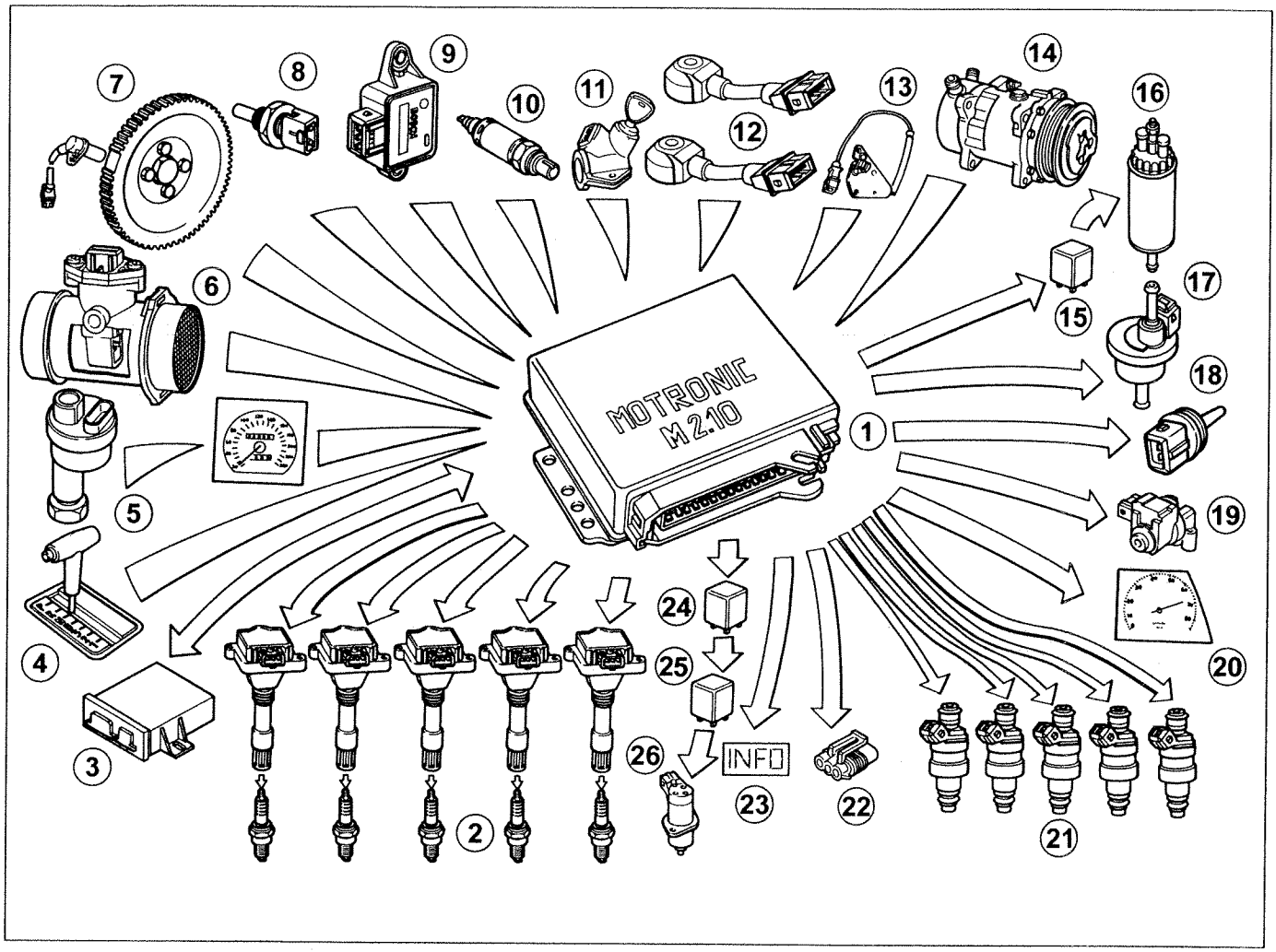

P3U23CX01

System components:

1. Electronic control unit
2. Coils and spark plugs
3. Immobiliser
4. Automatic transmission
5. Speedometer sensor
6. Debimeter
7. Rpm sensor
8. Water temperature sensor
9. Throttle potentiometer
10. Lambda probe
11. Ignition switch
12. Knock sensors
13. Timing sensor
14. Air conditioner compressor
15. Fuel pump contactor
16. Electric fuel pump
17. Fuel vapour intake solenoid
18. Air temperature sensor
19. Engine idle speed actuator
20. Rev counter signal
21. Injectors
22. Diagnostic socket
23. Infocenter
24. I.e. system relay.
25. Timing variator solenoid relay
26. Timing variator control solenoid

Copyright Fiat Auto

SINGLE COIL

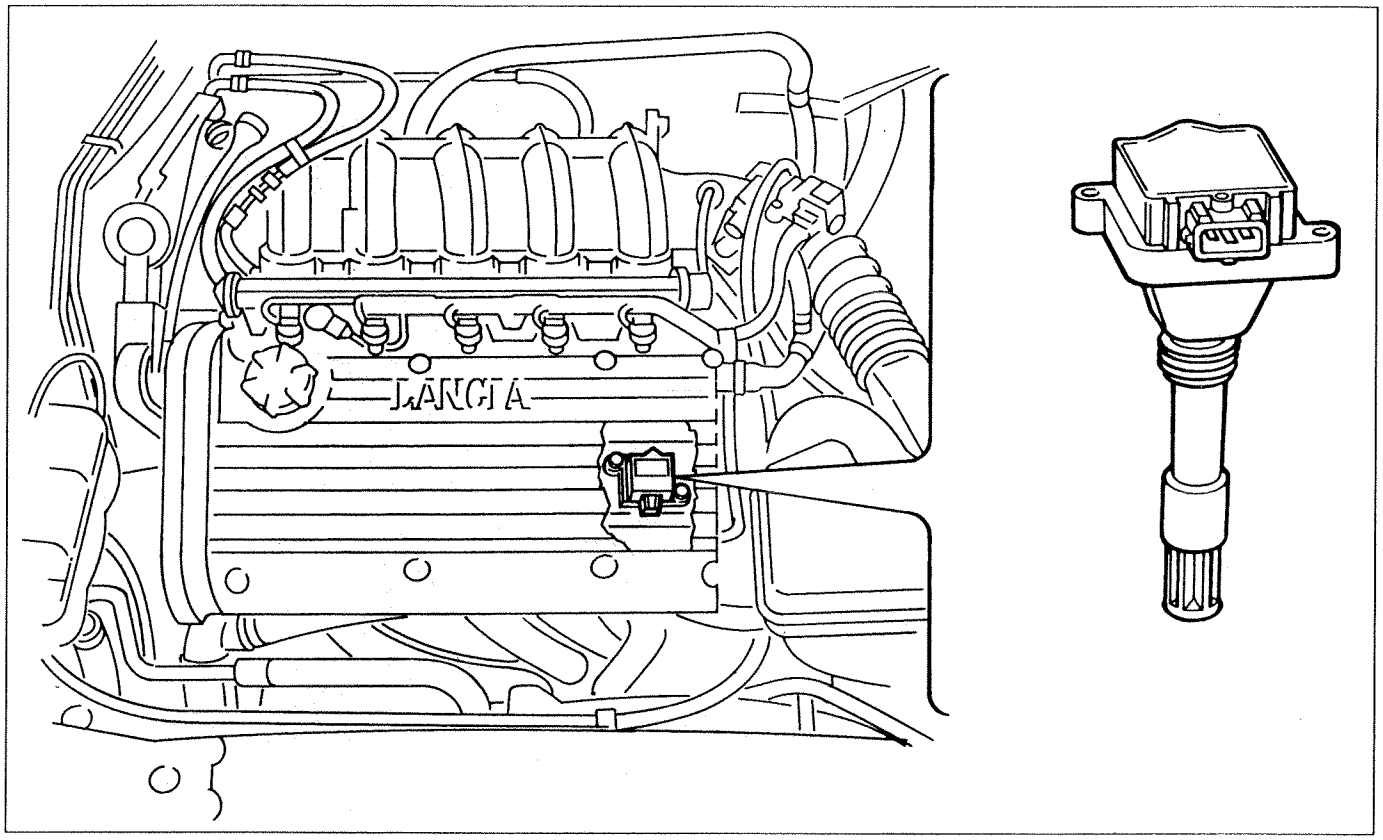

P3U24CX01

The static electronic ignition has been improved by adding a single coil for each spark plug. The power modules are also contained inside the ECU. This solution practically does away with the H.T. circuit and thus further increases reliability and safety while reducing the risk of fouling by high tension leads and connections.
In this system, one normal coil raises the voltage of the pulse directed to the spark plugs. Each individual coil, connected to the cylinder head, supplies a spark plug directly without intervening H.T. leads.
The coil wiring diagram is shown in the diagram.

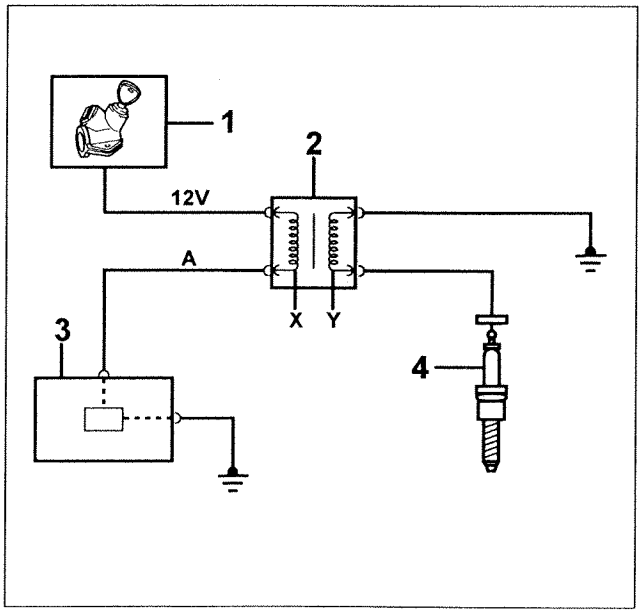

P3U24CX02

Electrical specifications

Primary winding inductance	3 mH
Primary winding resistance	0.4 Ω
Secondary winding resistance	8.5 KΩ
Anti-interference resistance	1 KΩ

A. Control signal
X. Primary winding
Y. Secondary winding
1. Power from ignition switch
2. Single coil
3. Electronic control unit
4. Spark plug

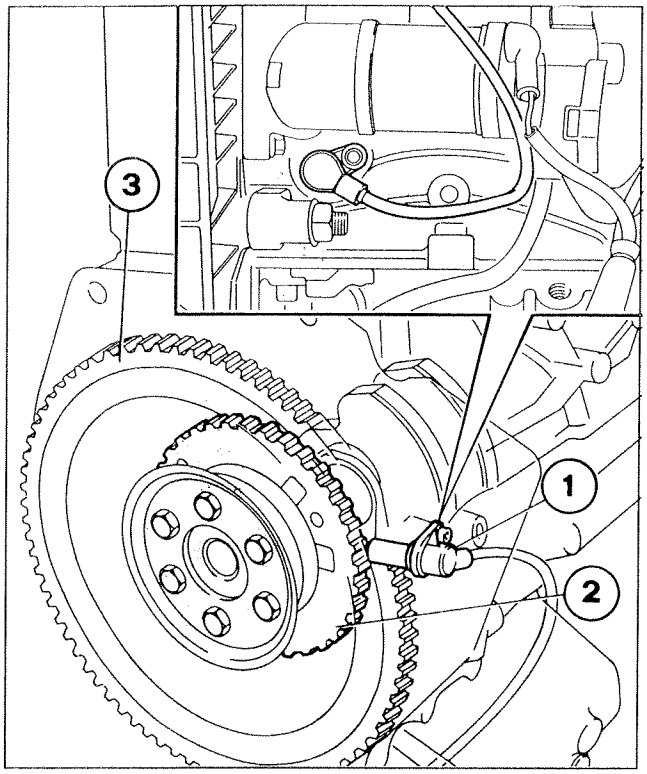

P3U25CW01

RPM AND TDC SENSOR

The sensor used for measuring rpm and TDC is inductive. In other words, it works by altering the magnetic field generated by teeth passing in front of a toothed pulley (phonic wheel) fitted insde the crankshaft and fastened to the rear crankshaft counterweight. The sensor is now fastened to the crankcase and gap and angular position need no longer be adjusted.
The teeth passing in front of the sensor alter the gap between pulley and sensor. The dispersed flow thus alters to set up an alternating voltage with amplitude dependent on rpm.
The phonic wheel consists of 58 teeth plus a gap equivalent to two missing teeth.
The reference marked by the gap left by the two missing teeth is used as a base for measuring synchronism point (TDC).

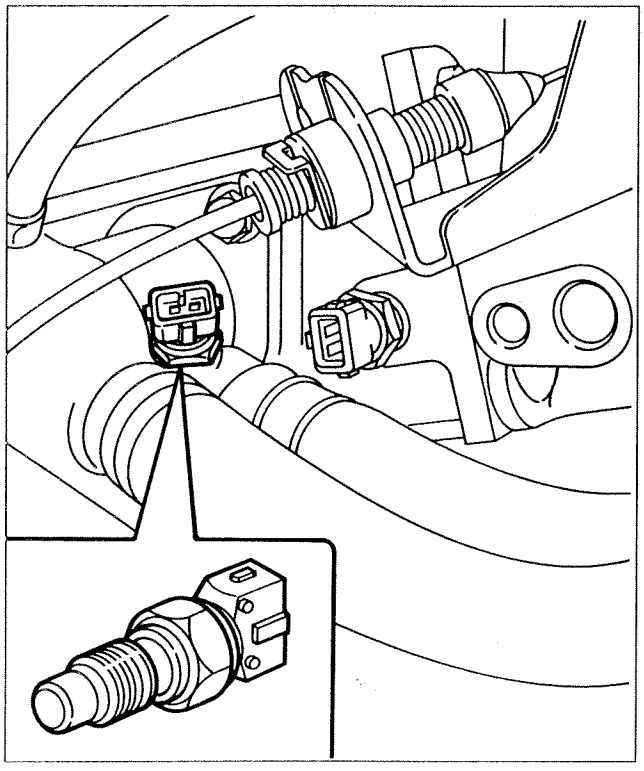

P3U25CX02

COOLANT TEMPERATURE SENSOR

The sensor is fitted near the thermostat case with its sensitive part in contact with the coolant. It consists of a brass case that serves to protect the resistant element, which is an NTC (negative temperature coefficient) «thermistor». The sensor electrical resistance drops as temperature increases.
The voltage it supplies to the ECU varies according to engine temperature in order to correct air flow meter data. According to the signal received from the sensor, the ECU can therefore increase fuel injection time to provide the necessary enrichment and make up for fuel loss due to condensation of fuel particles on intake ducts when the engine is not running at service temperature.
This sensor therefore safeguards engine operation during the stage subsequent to start-up by adding a further period of enrichment with intensity and duration dependent on coolant temperature. It also permits efficient engine operation during acceleration with engine cold.

Copyright Fiat Auto

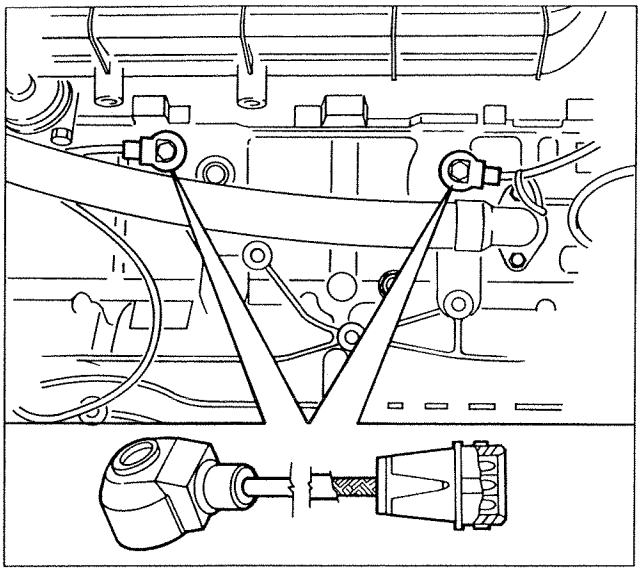

P3U26CX01

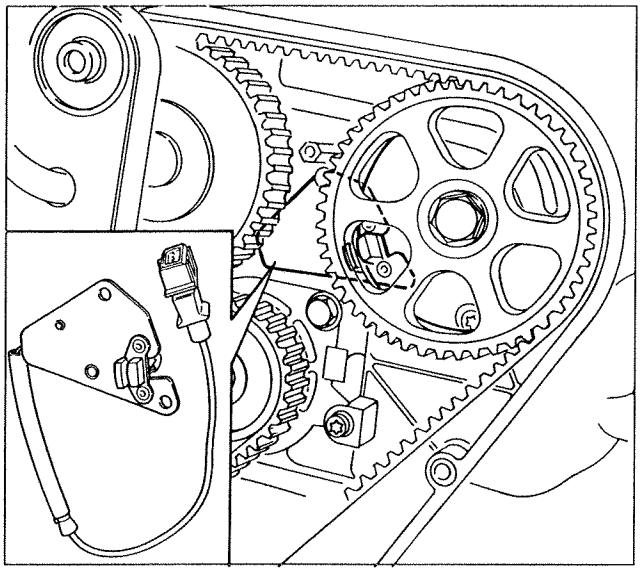

P3U26CW01

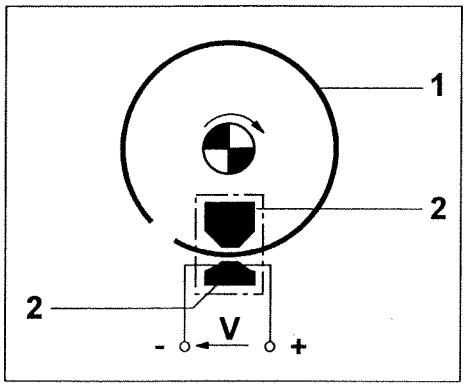

P3U26CX04

1. Deflector (pulley ring)
2. Magnetic material

KNOCK SENSORS (KNOCK)

The knock sensors are located on the engine block beneath the intake manifolds - between cylinders 1-2 and 4-5 respectively.
A through bushing prevents these sensors being tightened to an incorrect torque. **When replacing, do not fit shims or washers between crankcase and sensor mating surfaces.**
Vibrations of a given frequency are set up in the crankcase when engine knock occurs.
The knock gives rise to mechanical effects on a piezoelectric crystal, which sends a signal to the ECU. An ignition delay strategy is then implemented on the basis of this signal.

INJECTION TIMING SENSOR (CAM ANGLE)

The Bosch Motronic M 2.10 adopts a sequential, phased injection system. In other words, fuel injection occurs in sequence for each cylinder in intake phase.
To achieve this, the ECU uses a timing signal in addition to the rpm and TDC signal in order to determine injection point.
The signal sent to the ECU is generated by a Hall-effect sensor fitted near the camshaft drive pulley, exhaust end.

Principle of operation

A semi-conducting layer with current flowing through it is placed in a normal magnetic field (force lines at right angles to current direction). A potential difference known as a HALL voltage is set up at its terminals.
If current intensity remains constant, the voltage generated depends only on magnetic field intensity. Magnetic field intensity only needs to alter at intervals to obtain a modulated electrical signal with frequency proportional to speed with which magnetic field changes.
To obtain this change, the sensor is crossed by a metal ring (internal part of pulley) with an opening. The moving metal part of the ring covers the sensor and blocks the magnetic field to produce a low output signal. The sensor generates a high signal when aligned with the opening, i.e. with magnetic field present.

A high signal therefore alternates with a low signal once every two engine revolutions and specifically when cylinder no. 1 is 58° before TDC.
Together with the rpm and TDC signal, this signal allows the ECU to recognise the cylinders and determine injection point.

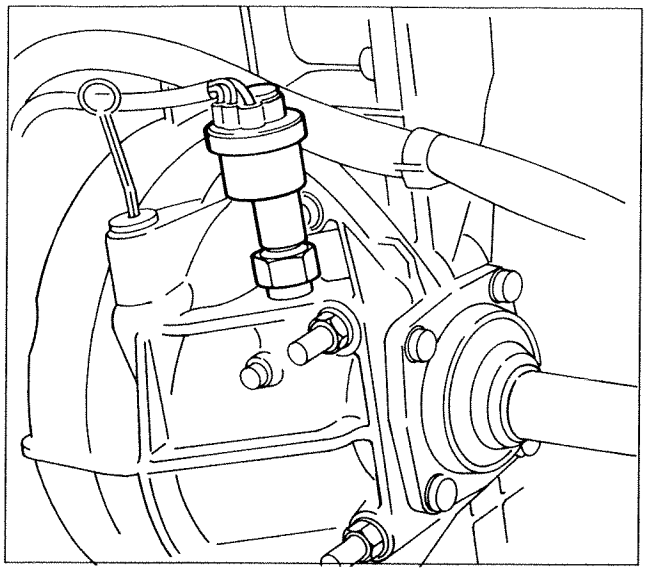

P3U26CX03

SPEEDOMETER SENSOR

The speedometer sensor (vehicle speed sensor) consists of a Hall effect sensor fitted to the differential outlet.
The sensor transmits a signal with frequency varying according to vehicle speed to the ECU.

The ECU uses this information to control idle adjustment actuator more effectively.

TIMING VARIATOR

A timing variator (electronic control and hydraulic activation) is adopted on the intake camshaft to achieve an effective compromise between high performance (i.e. power at high speeds) and good torque at low speeds.
This device allows the timing graph (intake stage) to be altered according to engine load requirement. This parameter is processed by the MOTRONIC control unit on the basis of electronic signals received by the air flow meter and rpm sensor, and sent as a command to the timing variator control solenoid.

The device consists of a main assembly fitted to the intake camshaft. It alters the angular position of the camshaft in relation to the drive pulley.
An activation valve is also present; driven by a solenoid. Both are fitted on the intake manifold and connected hydraulically to the main assembly by means of ducts.
The principle of operation is as follows:

- when engine load is below a set level, solenoid (1) is not activated and box of valve (2) pushed by counter spring (3) stays up so that oil from duct (A) cannot reach variator.

  In this case, intake valve timing remains unaltered.

  If engine load exceeds a set level, solenoid (1) is excited and box of valve (2) is pushed downward. In this position, oil from duct (A) enters chamber (B) of piston and then flows on to inner channel (C) through a hole.

  Oil may emerge from this channel only through an upper hole (communicating with variator inlet duct (D). Because valve box (2) is lowered, the lower hole does not communicate with inlet duct (E).

  Oil flows through ducts (D) and (F) to chamber (G) where it moves piston (4) to one side. The piston is forced to turn clockwise (viewed from camshaft end) as a result of the axial movement because it is driven by helical teeth on the outside.

  Rotation is transmitted by a spur-toothed splined sector to pinion (5), which is screwed onto threaded shank of camshaft (6). The pinion transmits rotation to the shaft, thus altering intake valve timing by 9°.

Copyright Fiat Auto

10.

When the solenoid is deactivated, the box of valve (2) returns to its original position to cut off the flow of oil under pressure to chamber (G), but allowing oil to return to exhaust under action of counter spring (7).

An extra channel ensures lubrication of camshaft journal even when device is not active.

Oil leaking back into chamber (H) of the solenoid drains out through duct (E).

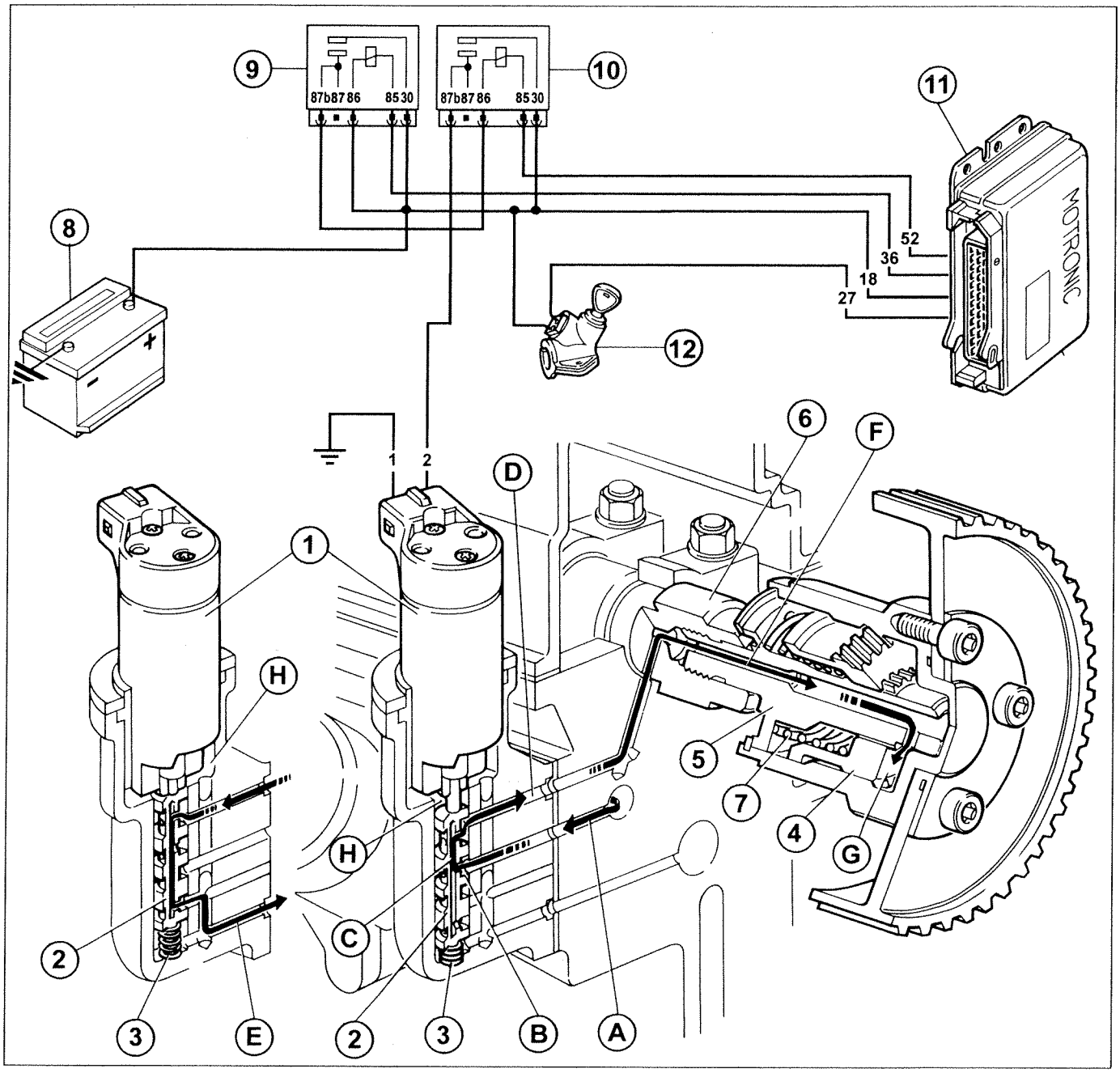

P3U28CW01

1. Solenoids
2. Valve box
3. Valve box spring
4. Piston
5. Pinion
6. Camshaft shank
7. Piston spring
8. Battery
9. Injection-ignition system relay
10. Timing variator solenoid relay
11. Injection-ignition ECU
12. Ignition switch

INERTIA SAFETY SWITCH

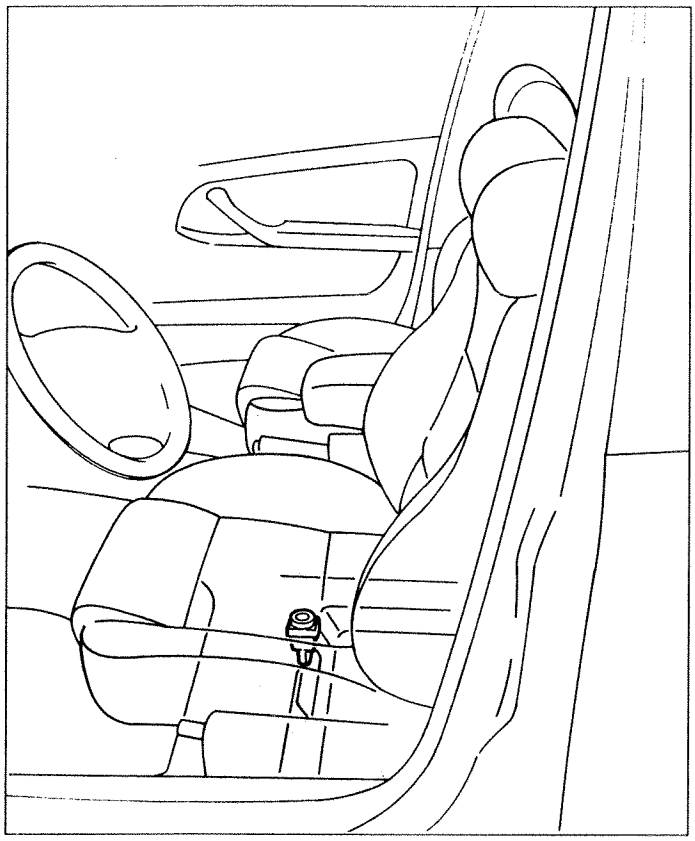

P3U27CX01

To increase the level of safety for vehicle occupants in case of impact, the vehicle is fitted with an inertia switch located inside the passenger compartment beneath the driver's seat on the left hand side.
This sensor reduces the likelihood of fire (due to fuel emerging from injection system) by de-activating the pump that supplies the injection circuit.
The switch consists of a steel ball fitted inside a tapered housing. It is normally held in locked position through the attractive force of an permanent magnet.
In case of violent vehicle impact, the ball is released from the magnet and opens the normally closed (N.C.) electrical circuit. This cuts off the fuel pump earth connection and consequently fuel flow to injection system.

To restore pump earth connection, move seat backward and press switch until it clicks on.

After even an apparently light collision, if a smell of petrol is noted or fuel leaks are seen, do not activate the switch again until the fault has been found and corrected in order to avoid the risk of fire. If no leaks are noted and the vehicle is able to start, press the button to re-activate the pump.

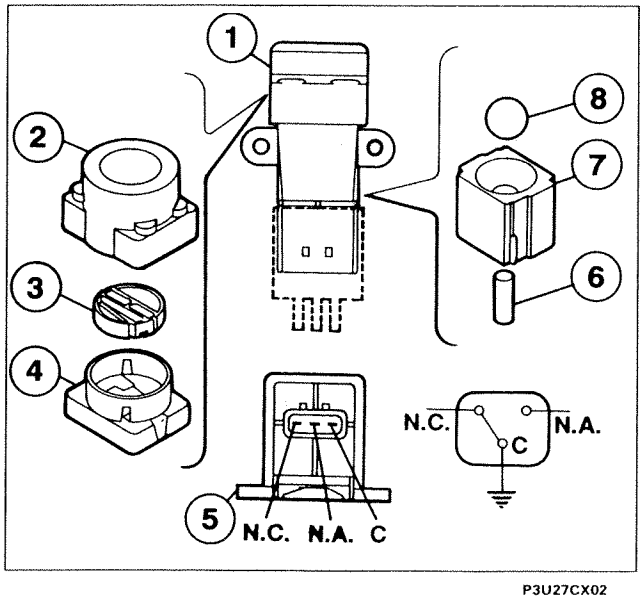

P3U27CX02

Components of inertia switch

1. Inertia sensor assembly
2. Sheath
3. Button
4. Upper end
5. Fitting end
6. Permanent magnet
7. Permanent magnet seat
8. Steel ball

C= Common terminal
N.C. Normally closed
N.A. Normally open

Copyright Fiat Auto

D. CIRCUIT FOR CHECKING HARMFUL EXHAUST EMISSIONS

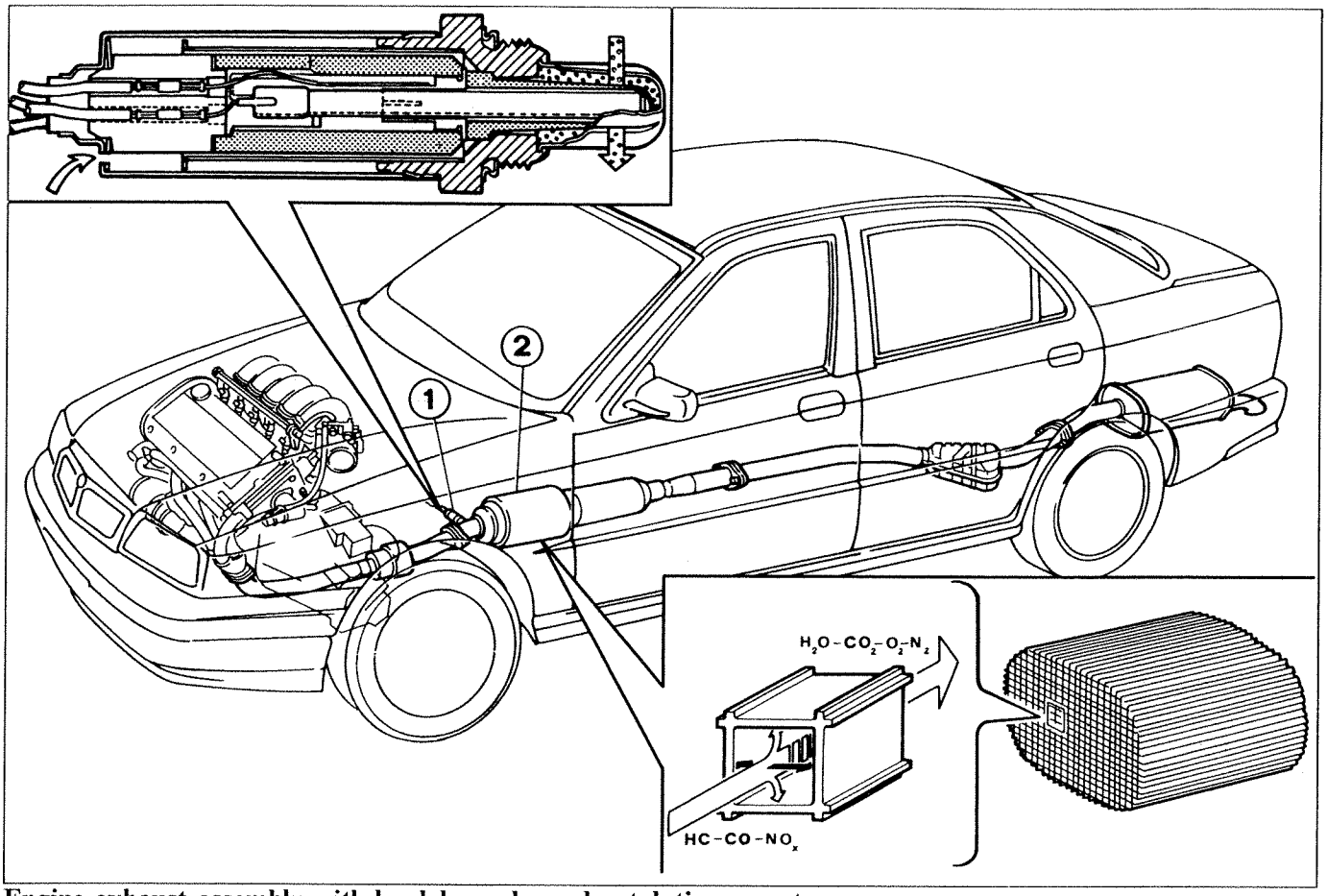

Engine exhaust assembly with lambda probe and catalytic converter P3U30CW01

1. Lambda probe
2. Catalytic converter

In order to meet stringent specifications covering noxious emissions from internal combustion engines (which dicate a need for increasingly precise air-fuel mixture proportions) the vehicle is fitted with a four-channel hot lambda probe for measuring exhaust gas oxygen content and a catalytic converter.

The sensor output signal is sent to the ECU in order to adjust air-fuel mixture with the aim of keeping mixture stoichiometric ratio as close to specified values as possible.

The exhaust system is equipped with a catalytic converter made out of special noble metal alloys. It is housed in a stainless steel container able to stand up to high operating temperatures.

The catalytic converter converts uncombusted hydrocarbons, carbon monoxide and nitrogen oxides in exhaust emissions (even though quantities are minimal due to the electronic ignition and injection system) into non-pollutant compounds.
This reliable system ensures operation is fault-free. At the same time, pollutant levels are minimised while performance levels are above average.
Use solely unleaded fuel with octane number (R.O.N.) at least 95 to extend life of certain components, including exhaust gas catalytic converter and also ensure peak vehicle performance and reliability.

NOTE *The fuel octane number (R.O.N. = Research Octane Number) indicates ability to resist self-ignition.*

The higher the octane number, the greater the likelihood of avoiding cylinder head knock.
It is essential to use a fuel with a suitable octane number in order to avoid damage to engine.

FUEL EVAPORATION CONTROL AND VAPOUR RECOVERY CIRCUIT

The system adopted for tank ventilation is "closed" type.
This system prevents fuel vapours formed within the tank and fuel system from entering the atmosphere It also prevents release of their load of polluting light hydrocarbons (HC).

The system consists of tank (9), vapour separation tank (8), multifunction valve (7) for controlling vapour flow, two-way pressure relief and ventilation valve (6) in fuel filler plug, active carbon filter (2) and vapour cut-off valve (1) which is controlled by ECU (5).

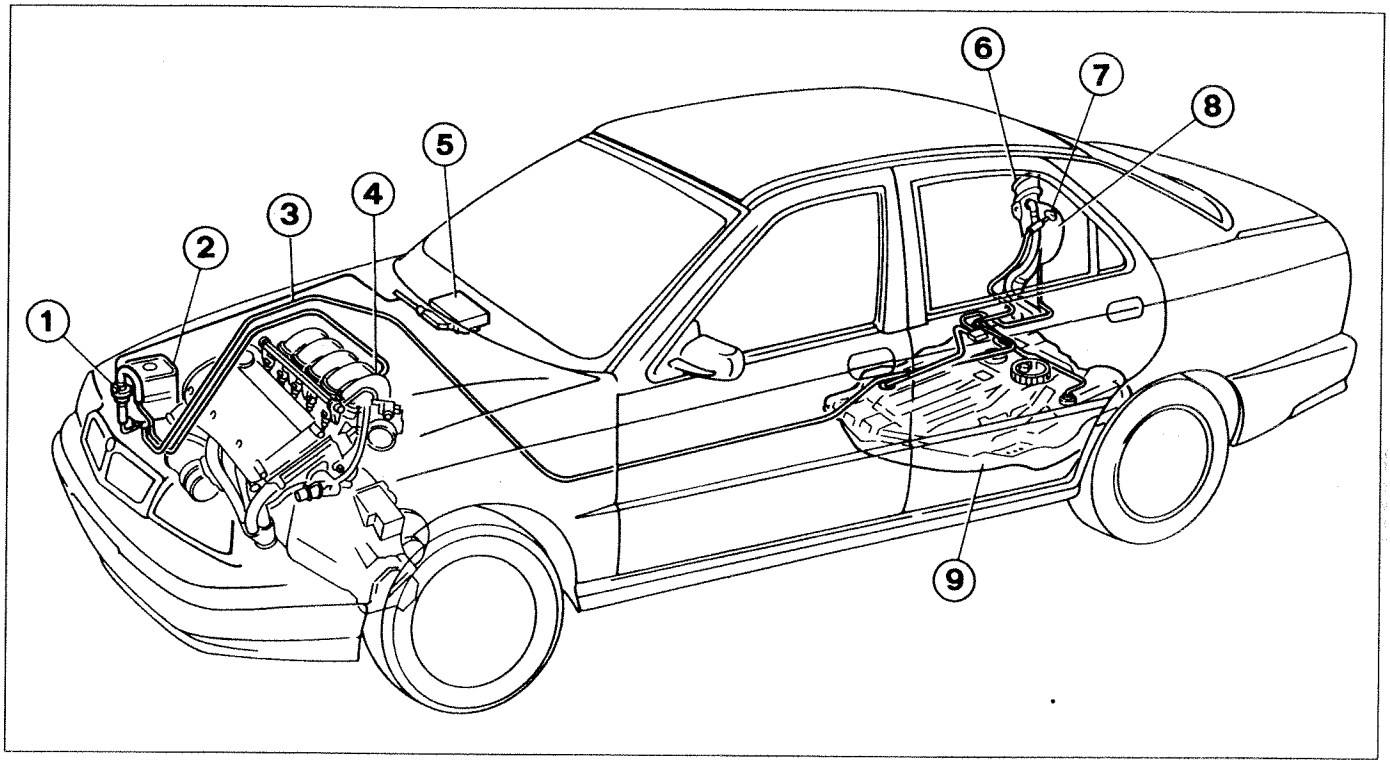

P3U29CX01

1. Fuel vapour cut-off solenoid
2. Active carbon trap filter
3. Tank vapour inlet lines
4. Vapour intake on manifold
5. Injection-ignition ECU
6. Filler fitting plug with pressure relief and ventilation valve
7. Multifunction valve
8. Fuel vapour separator (expansion tank)
9. Fuel tank

Principle of operation

The system operates when, with high outdoor temperatures, after the vehicle has been at a standstill for a long time, the fuel temperature increases (because the tank is no longer cooled by the car's motion) and brings about a pressure increase inside the tank. This increase may occur with medium-low fuel levels or with the tank full - in particular:

- **With the tank full** multifunction valve (7) is closed and fuel may not go to filter (2) and spoil the active carbon by direct contact. If pressure inside the tank exceeds a certain limit, the two-way pressure relief valve (6) opens to allow excess pressure to vent outside;
  If necessary, valve (6) may open in the opposite direction to ventilate valve if a vacuum has been set up inside;

- **With medium-low fuel levels** multifunction valve (7) allows fuel vapours to flow to filter (2) when they exceed a certain pressure. Here they are absorbed and cleaned by the active carbon granules. The vapours then flow on to the intake manifold when the ECU (5) opens solenoid (1).

Copyright Fiat Auto

DESCRIPTION OF OPERATION OF MAIN FUEL EVAPORATION CONTROL SYSTEM COMPONENTS

Multifunction valve

This valve performs the following functions:
- prevents fuel flowing out in case the vehicle overturns in an accident;

- vents fuel vapours from tank to the active carbon trap filter;
- ventilates the tank if a vacuum builds up inside.

This valve consists of: a float (2), a heavy ball (3), a plate (4), pushed against valve case (5), plate (8) pushed up against plate (4) by spring (9). Multifunction value operates as follows, depending on fuel tank level:

a. if the tank is full float (2) blocks hole (1) to prevent liquid fuel from reaching active carbon filter and avoid damage to the filter;
b. the tank fuel level drops, float (2) is lowered and rests upon ball (3) to open hole (1). When the pressure exercised by fuel vapours on plate (4) overcomes load of spring (5), a ring opening between plate and valve case allows fuel vapours to emerge through duct (6) and reach the active carbon filter.

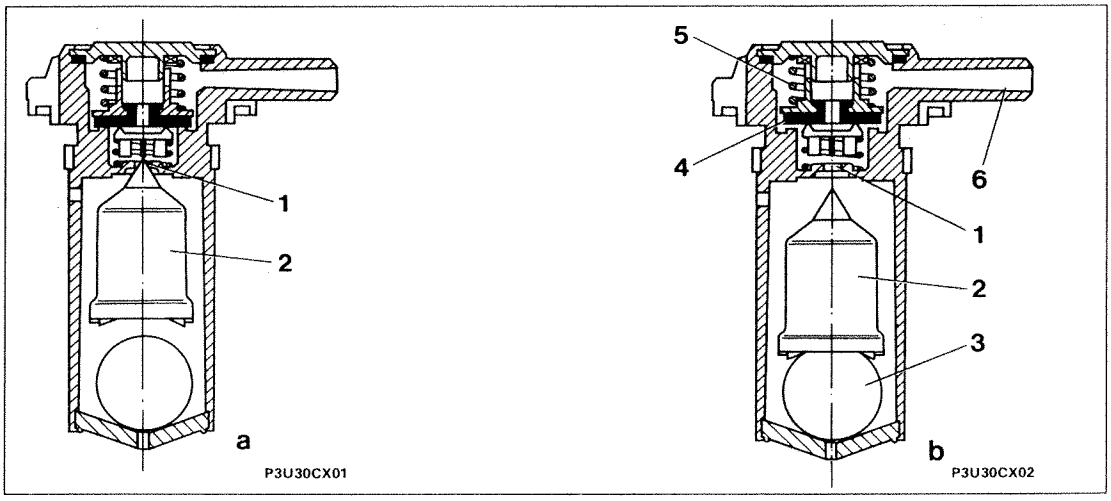

c. if the drop in tank fuel level is sufficient to set up a vacuum in the tank, this acts on plate (8) and overcomes load of spring (9) so that this moves down to allow tank ventilation through port (7).

d. if the vehicle overturns, however full the tank, the weight of ball (3) acts on float (2) to push the float against hole (1) and prevent a dangerous flow of fuel to the intake manifold with the attendant risk of the vehicle catching fire.

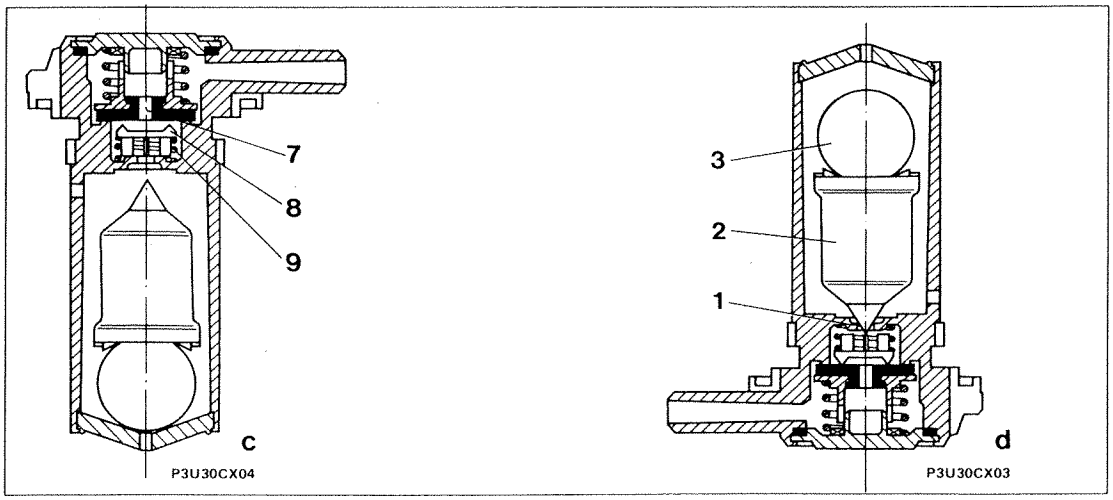

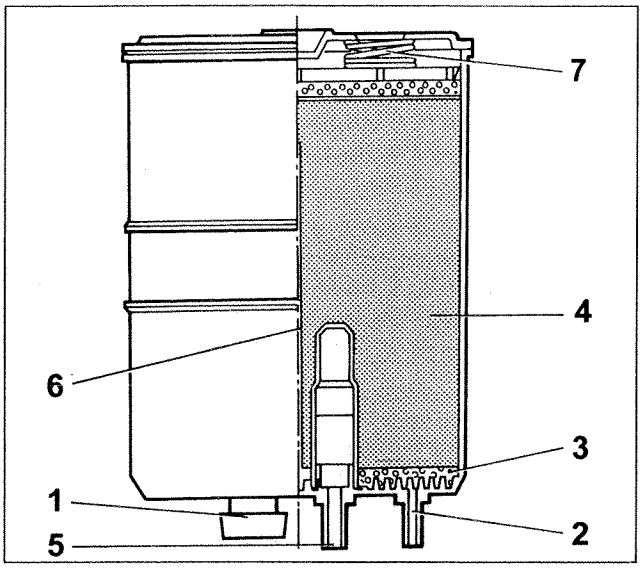

P3U33CW01

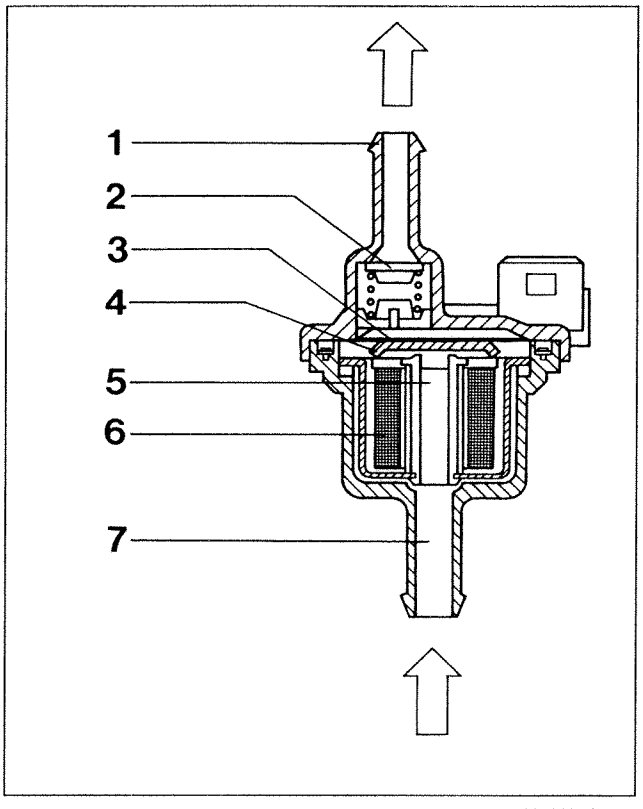

P3U31CX01

1. Inlet fitting (from active carbon filter))
2. Check valve
3. Spring pack
4. Plunger
5. Outlet port
6. Solenoids
7. Outlet fitting (to intake manifold)

Active carbon trap filter

This consists of carbon granules (4) that trap fuel vapour entering intake (5).

Flushing air enters intake (1), through paper filter (3) and flows over the carbon granules to remove fuel vapours and carry them toward the outlet (2) and then on toward the cut-off valve.

Air entering through intake (5) may also be pulled back by a vacuum in the tank, when it serves to ventilate the tank.
Partition (6) ensures that the flushing air flows over all the carbon granules and promotes the release of fuel vapour toward the inlet manifold.
Two springs (7) allow the mass of granules to expand when the pressure increases.

Vapour cut-off solenoid

This ECU-controlled valve controls the quantity of fuel vapours taken up by the active carbon filter and directed to the intake manifold.

When inactive, this valve is open. Turn ignition switch to MAR to close for activation. When excited, solenoid (6) attracts plunger (4), which overcomes the load of spring pack (3) to close orifice (5) and prevent fuel vapour from passing through.

Operation is controlled by the ECU as follows:

- during the start-up stage, the solenoid remains closed to prevent fuel vapours producing an over-rich mixture;

- when the engine is started, the ECU sends the solenoid a signal that modulates opening according to signal empty/full ratio.

In this way, the ECU controls the quantity of fuel vapour sent to the intake. This prevents significant changes (particularly when idling) in mixture concentration.

NOTE *The solenoid must be fitted the right way round: the arrow on the case should point towards the vacuum intake on the intake manifold.*

Copyright Fiat Auto

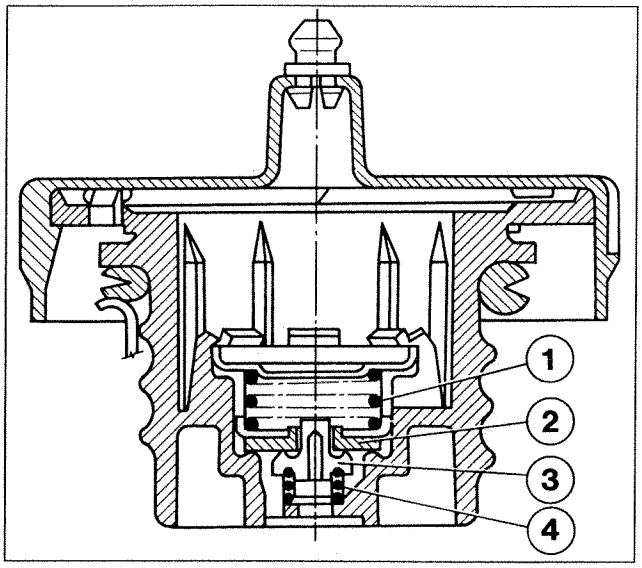

P3U34CW01

Safety and ventilation valve

This valve is located in the fuel filler fitting plug and performs the following functions according to pressure inside tank:

- discharging excessive pressure set up inside tank (pressure relief function). Pressure acts on plate (2) and overcomes load of spring (1) to discharge excess vapour to the atmosphere.
- permitting outside air to flow into tank when an excessive vacuum is set up inside as fuel is used up (ventilation function). In this case, when the vacuum exceeds load of spring (4), valve (3) moves to admit air to the tank.

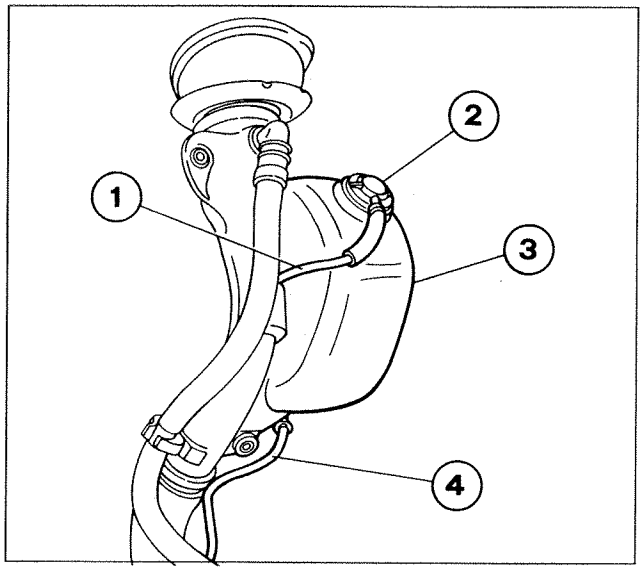

P3U32CX02

Fuel vapour separator (expansion tank)

Fuel vapours from the tank reach vapour separator (3) located besides the fuel filler fitting through line (4).

A proportion of the vapours condenses and turns to the tank through the same pipe (4), whereas the remaining vapours emerge from the separator through multifunction valve (2) and are conveyed to the active carbon filter through pipe (1).

1. Line connecting fuel vapour separator to active carbon filter
2. Multifunction valve
3. Fuel vapour separator
4. Line connecting vapour separator to fuel tank

CRANKCASE GAS RECIRCULATION SYSTEM

The system controls crankcase emissions of vent gases (air-fuel mixtures and combusted gases) that leak through the piston rings and oil vapours, by causing them to recirculate to the intake.

Vent gases directed up through baffles emerge from the engine oil filler fitting. They then pass through separators (7) located under the cam cover. Here they lose part of their oil content. This falls back to the camshafts through line (6).

Pipe (6) is formed in the shape of a trap to prevent vent gases leaking through. In this way, only oil droplets are recirculated.
The remaining gases emerge from outlet (5), which contains a flame trap (4) to prevent combustion due to the flame returning from the butterfly valve case (5).
Vent gases flow from outlet (5) to T-fitting (3).
With throttle open, gases flow through outlets (1) and (2) to be taken up into manifold.
With throttle closed, vacuum in intake manifold takes up gas through outlet (1), which contains a PCV limiter valve (8) (Positive Crank Ventilation). This reduces the incoming flow.

The PCV can be modulated and the quantity of gas flowing through is proportional to the vacuum in the intake manifold.
When the butterfly valve is fully open (condition A), the vacuum inside the intake manifold is minimal. Spring (10) is fully extended and PCV valve allows a maximum amount of vent gases to flow through.

Conversely, when the throttle is fully closed (condition B), the vacuum inside the manifold is maximal. This moves plunger (9) to reduce the vent gas flow inside the PCV valve and reduce level of gas taken into the manifold.

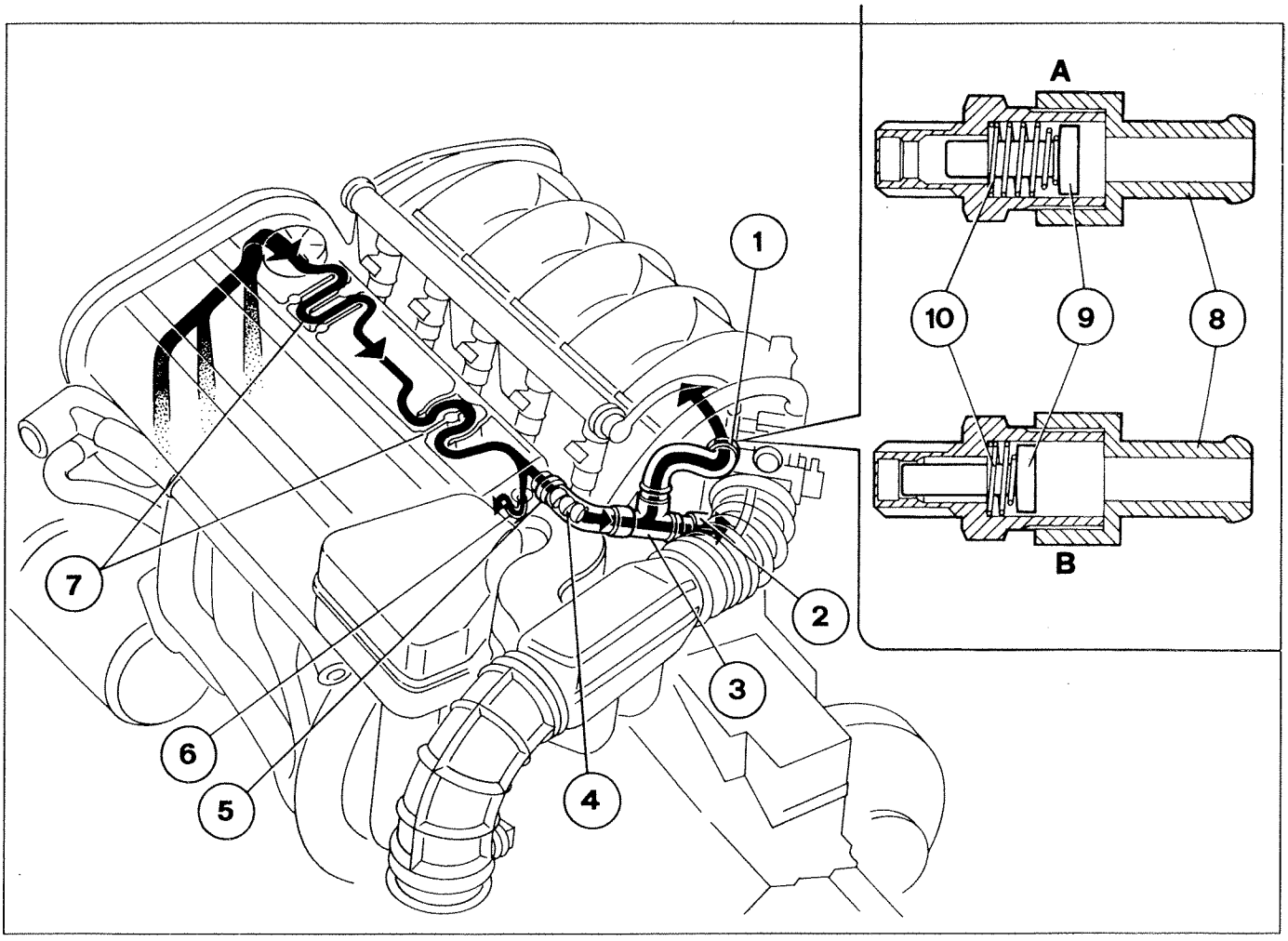

P3U35CW01

Copyright Fiat Auto

10.

CHECKS AND ADJUSTMENTS TO BOSCH M2.10 INJECTION/IGNITION SYSTEM ADDITIONAL TO DIAGNOSIS WITH FIAT/LANCIA TESTER

OBSERVE THE FOLLOWING PRECAUTIONS WHEN WORKING ON VEHICLES WITH MOTRONIC INJECTION-IGNITION SYSTEMS:

- *never start the engine when the electrical terminals are poorly connected or loose on the battery poles;*
- *never use a quick battery charger to start the engine;*
- *never disconnect the battery from the car circuit with the engine running;*
- *when charging the battery quickly, first disconnect the battery from the vehicle circuit;*
- *if the vehicle is placed in a drying oven after painting at a temperature of more than 80° C, first remove the injection/ignition ECU;*
- *never connect or disconnect the ECU multiple connector with the ignition key in MARCIA position;*
- *always disconnect battery negative lead before carrying out electrical welding on vehicle.*

Note that his system has a stand-by memory containing all learnt self-adaptive parameters. Because all this information is lost when the battery is disconnected, this operation should only be carried out when absolutely essential.

REMOVING-REFITTING FUEL FILTER

- Raise the vehicle.
- Unscrew fuel inlet and outlet fittings from filter
- Collect fuel emerging during the operation in a suitable container. Plug fittings without bending or twisting rigid pipes
- Remove clip after unscrewing retaining screw.

The fuel filter must be replaced at intervals of 60,000 km.
After replacing the filter, start the engine and check for leaks from the seals.

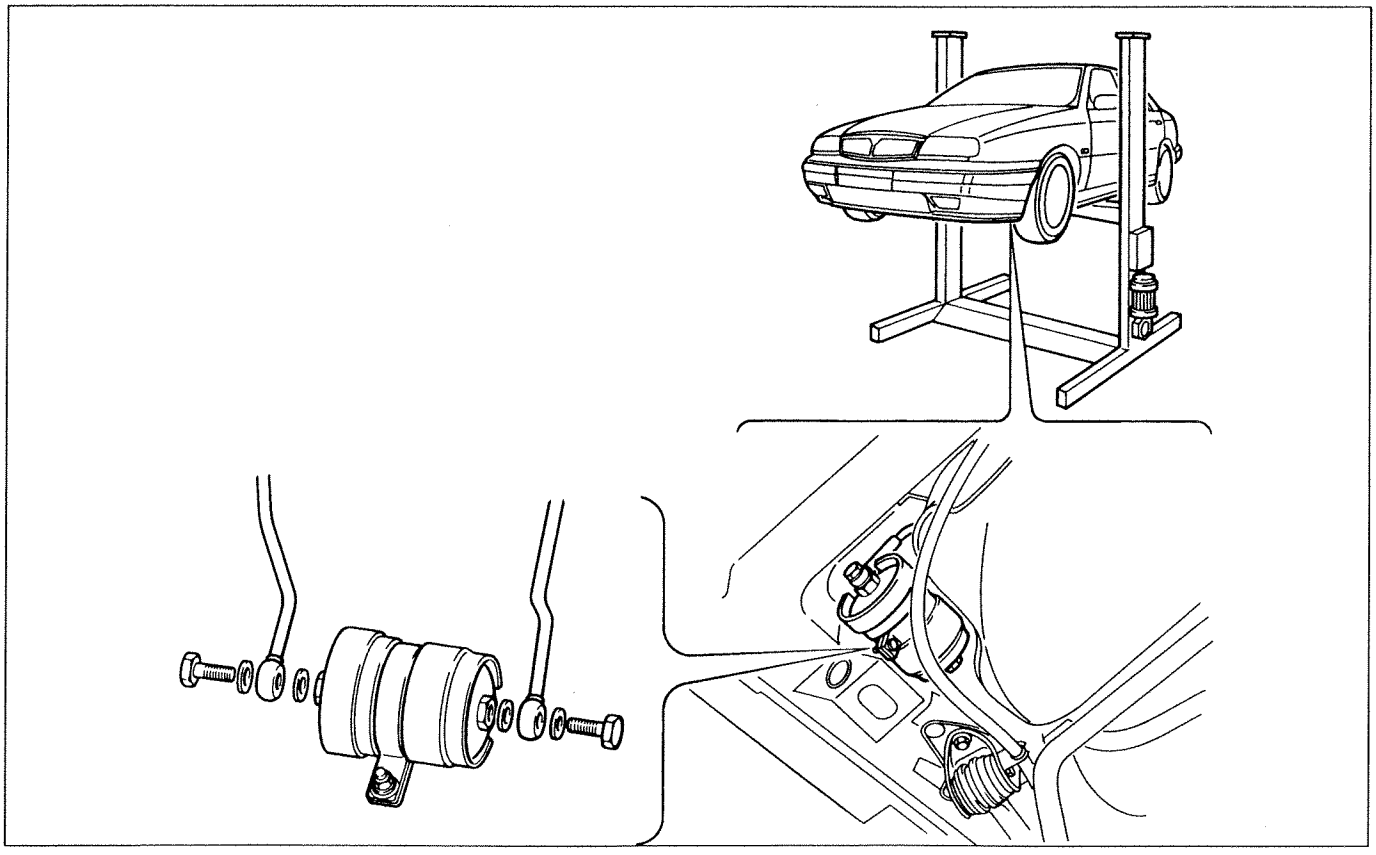

P3U33CX01

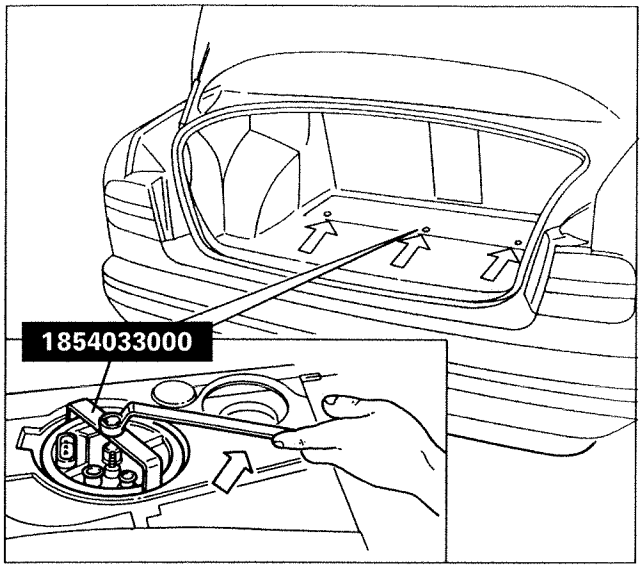

P3U34CX01

REMOVING-REFITTING ELECTRIC FUEL PUMP

The pump is located inside the tank.
Proceed as follows to remove:

- undo retaining studs indicated and raise boot mat;
- remove dust cover
- disconnect electrical connection;
- remove retaining plate;
- disconnect fuel delivery line from pump (white fitting);
- disconnect fuel return line from pump (red fitting);
- uncrew ring nut retaining pump to tank using tool 1854033000 and a box wrench;
- remove pump.

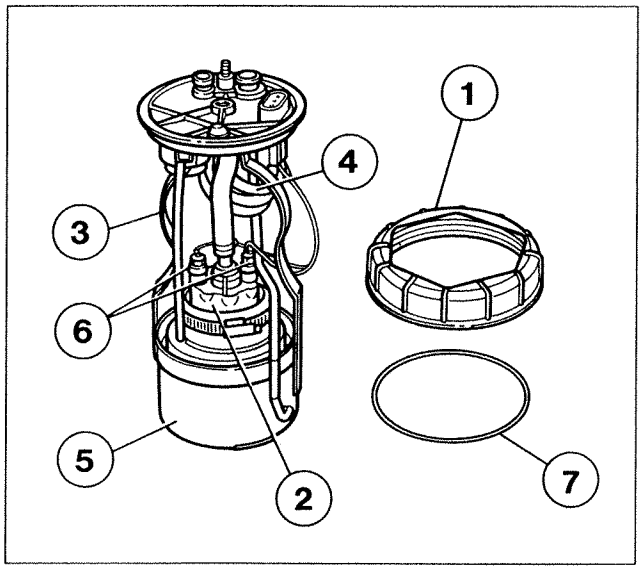

P3U34CX02

1. Retaining lock-ring
2. Electric pump
3. Pump flexible mount
4. Vibration (or noise) damper
5. Mesh prefilter
6. Fuel pump electrical supply terminals
7. Sealing ring

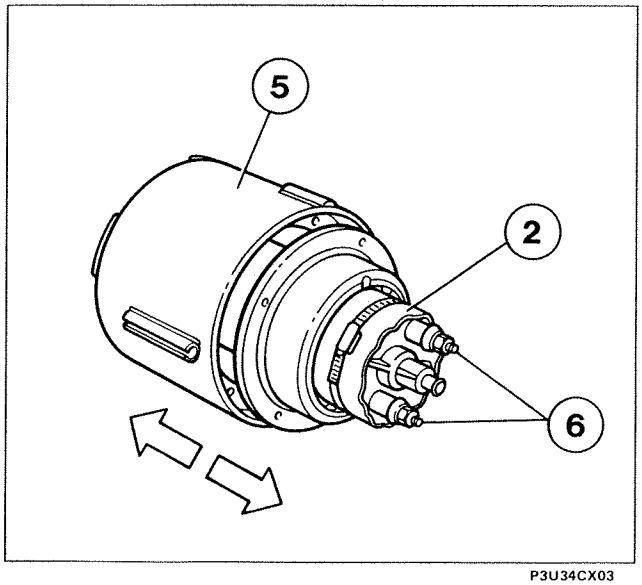

P3U34CX03

Removing pump from mesh prefilter

When refitting, do not reverse electrical lead position because terminals are of different diameter.

10.

REMOVING-REFITTING FUEL MANIFOLD TOGETHER WITH INJECTORS And PRESSURE REGULATOR

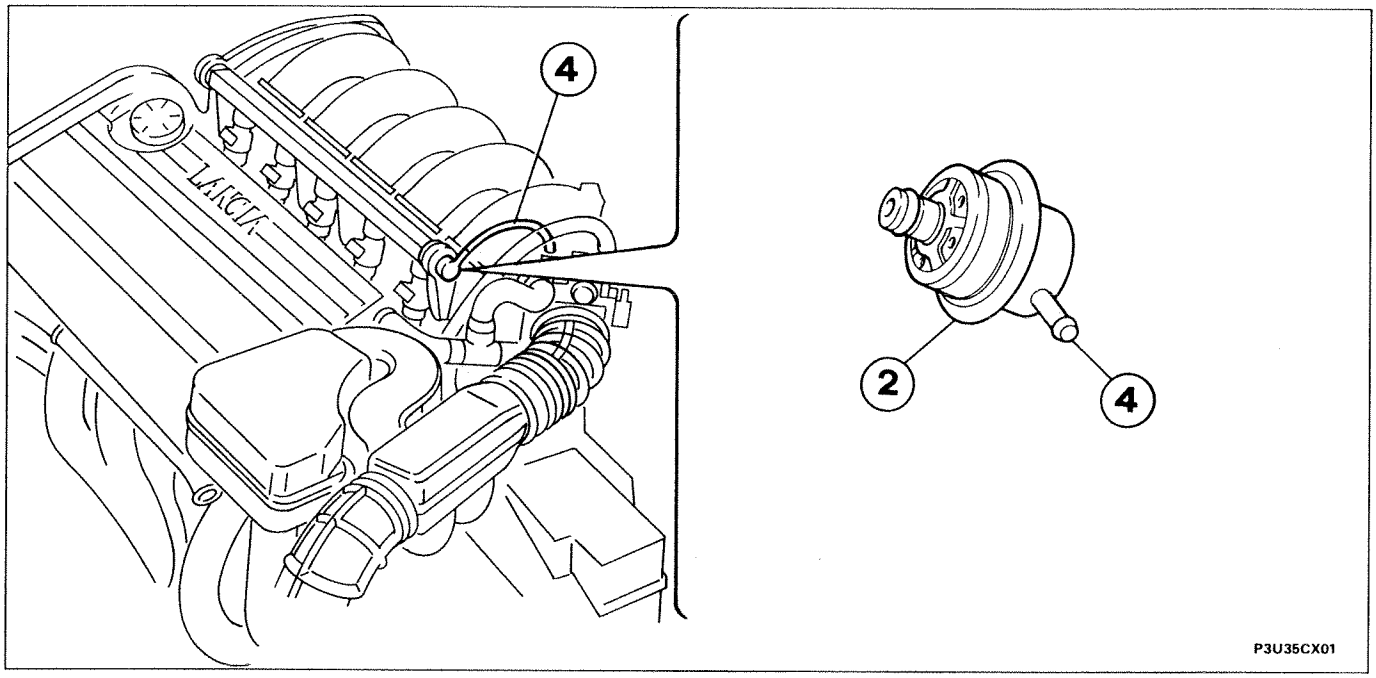

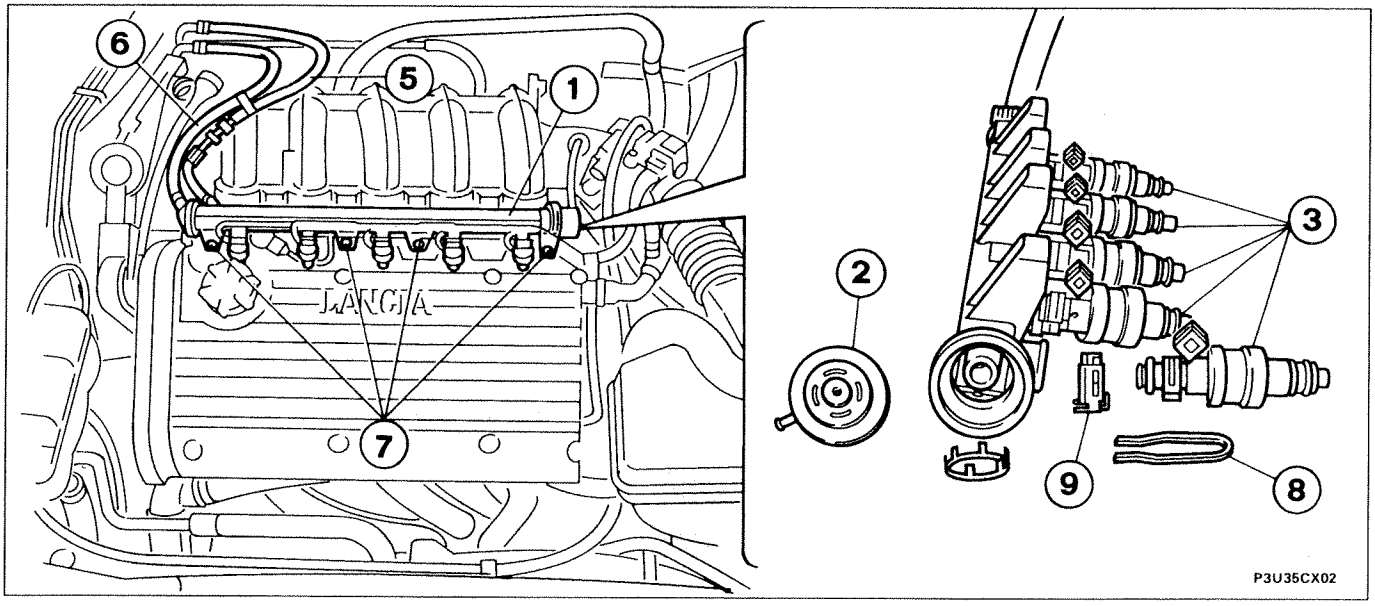

Proceed as follows:

- Disconnect fuel inlet line (5) from fitting
- Loosen clip of return pipe and disconnect rubber hose from rigid pipe.
- Disconnect electrical connectors from injectors
- Unscrew retaining screws (7).
- Remove injector/manifold assembly.
- Remove clip (9) to remove injectors from fuel manifold.

1. Fuel manifold
2. Fuel pressure regulator
3. Injectors
4. Vacuum socket from engine inlet manifold
5. Fuel inlet pipe from pump
6. Fuel return lines to tank
7. Screws retaining fuel manifold and injectors
8. Pressure regulator clip on fuel manifold
9. Clip retaining injector to fuel manifold

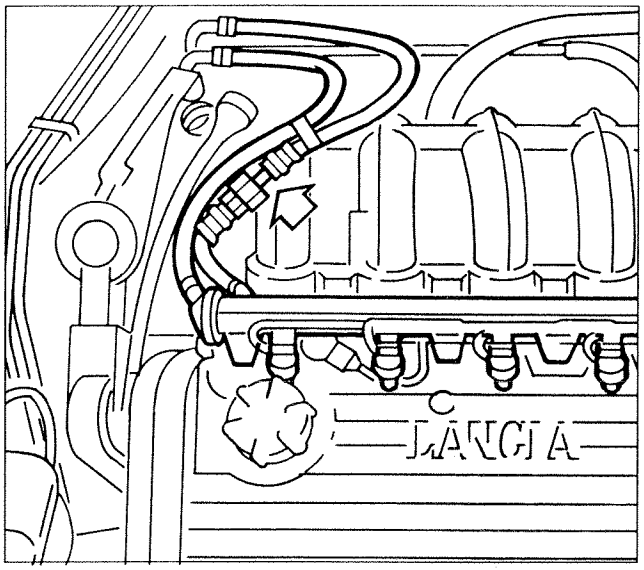

P3U39CW01

CHECKING FUEL SUPPLY CIRCUIT

Test 1

Checking fuel feed pressure

- Disconnect the fuel delivery pipe to the manifold from the fitting indicated by an arrow.
- Interpose pressure gauge 1895890000 between the disconnected pipe end and the injector fuel manifold with both cocks A and B in open position.

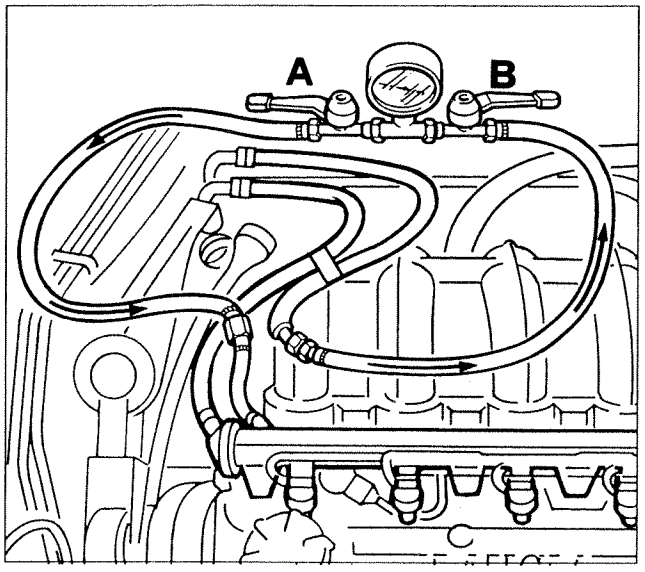

P3U39CW02

- Activate "fuel pump test" with the aid of a Fiat-Lancia Tester with engine off.
- The pressure reading on the gauge should stabilize at 3 bar under these test conditions. If pressure is insufficient or excessive, carry out test 2.

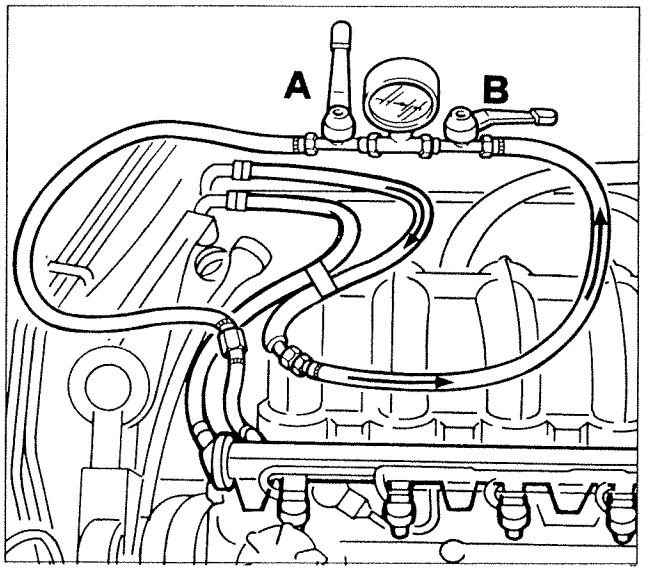

P3U39CW03

Test 2

Checking maximum fuel feed pressure (or pump efficiency)

Same connections as previous test.

- close fuel cock lever A (downstream of pressure gauge).
- operate the pump with the engine off, as described previously: pressure should reach 6 bar and not exceed 7.5 bar (pump pressure relief valve setting). If the pump fails the test, replace because it is defective.

Copyright Fiat Auto

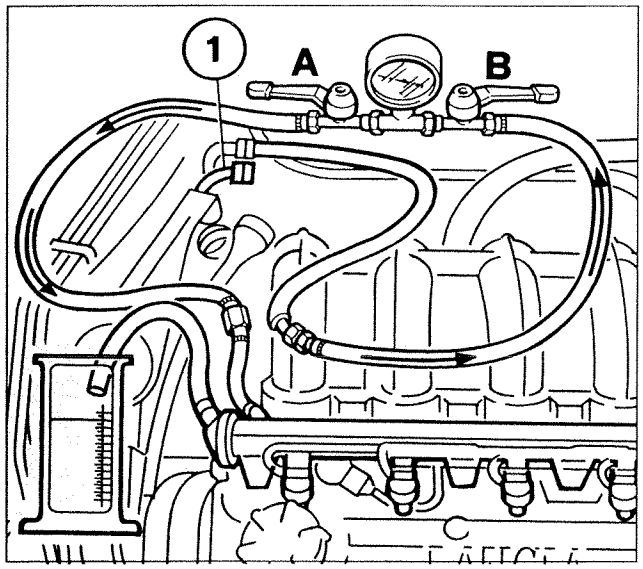

P3U40CW01

If pressure measured in test 1 (see previous page) exceeds 3 bars proceed as follows:

- disconnect fuel return pipe from pressure regulator and replace provisionally with a pipe leading to a container able to collect the fuel;
- adjust cocks A and B to open position
- operate the fuel pump (with engine off as described on previous page), then take pressure reading off pressure gauge:
  a. if it reaches 3 bars replace the fuel return pipe to the tank because it is blocked or kinked;
  b. if it exceeds 3 bars replace the pressure regulator because it is defective.

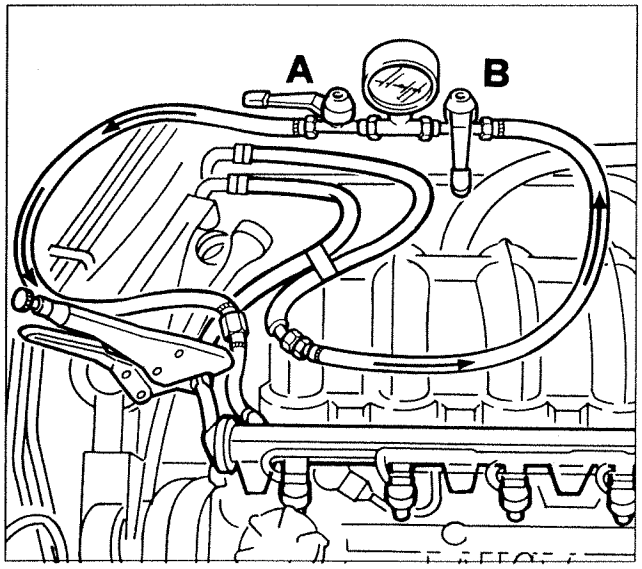

P3U40CW02

check 3

Checking injector seal

To check for drips from the injectors, connect as described in first test (regulation pressure check) and operate pump with engine off. Once regulation pressure is reached, close fuel cock control lever B (arrowed) (upstream of the pressure gauge) and simultaneously compress fuel return line to tank; use pliers for this purpose and avoid damage to the pipe.

This operation is necessary to tell the difference between an actual injector leak and an imperfect seal in the fuel pressure regulator reflux valve

Then:
- turn off the pump.
- see whether the pressure remains constant for about 60 seconds once it stabilizes (i.e. drops slightly).

If not, one or more of the injectors or a fitting must be leaking.
- In this case, disconnect the fuel manifold from the inlet manifold while maintaining the connection to the pressure gauge.
- Repeat the previous test, leaving the pressure gauge cock open.
- After supplying the pump with the engine off, look to see whether any of the injectors or connection sections are dripping.

Replace any dripping injectors and/or repair the defective seal in the leaking joint.

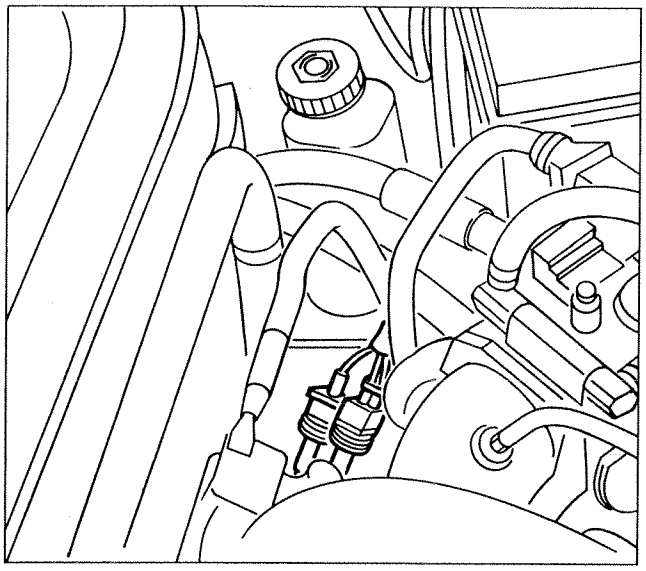

P3U41CW01

REMOVING-REFITTING LAMBDA PROBE

NOTE *The probe may be quickly rendered unserviceable by the presence of even slight amounts of lead in the fuel. The programmed maintenance plan therefore stipulates functional checks at 45,000 and 90,000 km.*

- Position vehicle on lift.
- Disconnect battery negative lead.
- Disconnect both electrical connections from Lambda probe.
- Remove Lambda probe from its seat.

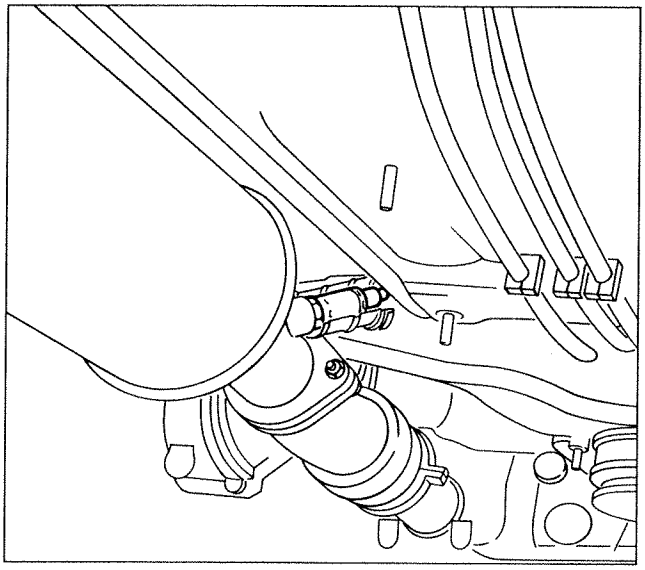

P3U41CW02

5.0-6.0 daNm

- Do not force component during tightening because this could cause irreparable damage.

When refitting a new lambda probe, spread threaded part with anti-slip graphite grease (e.g. Bosch VS 14016-FT).

The electrical resistance reading on the digital multimeter should be between 2.5 Ω and 4.5 Ω at room temperature.

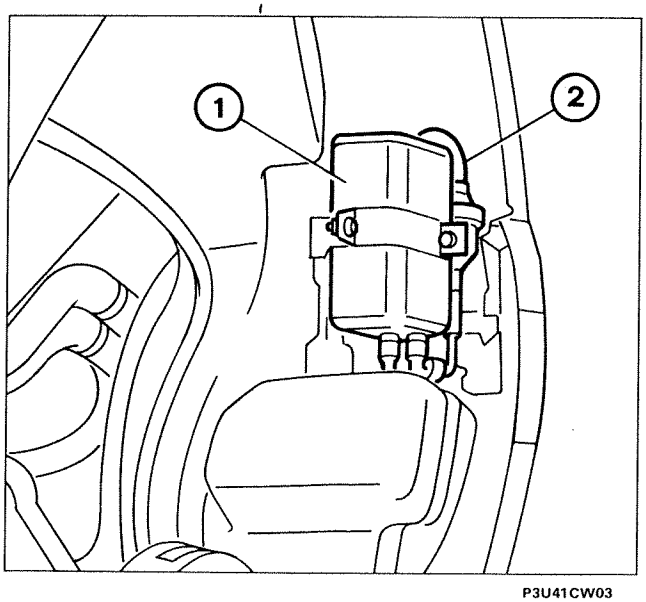

P3U41CW03

REMOVING-REFITTING ACTIVE CARBON TRAP FILTER AND FUEL VAPOUR CUT-OFF SOLENOID

The same procedure applies to both active carbon trap filter (1) and solenoid (2).

- Lift vehicle;
- remove right front wheel;
- remove front right wheel arch lining;

- remove filter and solenoid from compartment, separate and disconnect electrical connection and associated lines.

Copyright Fiat Auto

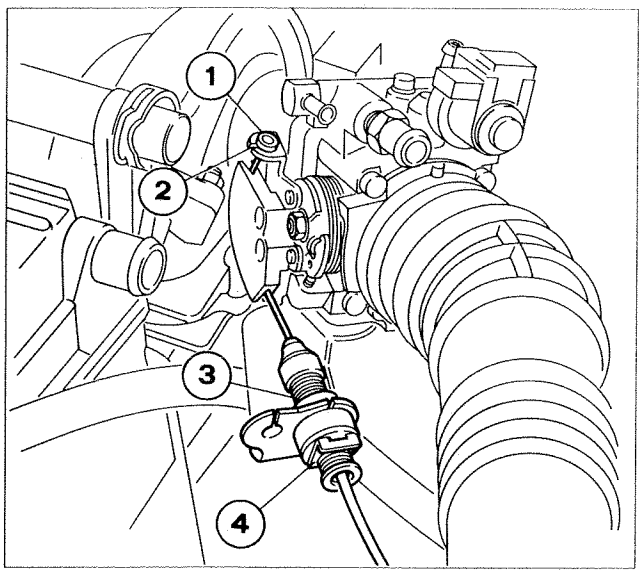

P3U36CX01

ADJUSTING THROTTLE CABLE

Adjust accelerator cable by moving clip (4) to one of the different grooves on bushing (3).

Position clip so that accelerator cable head (1) fits freely into slot (2) without altering engine idle speed.

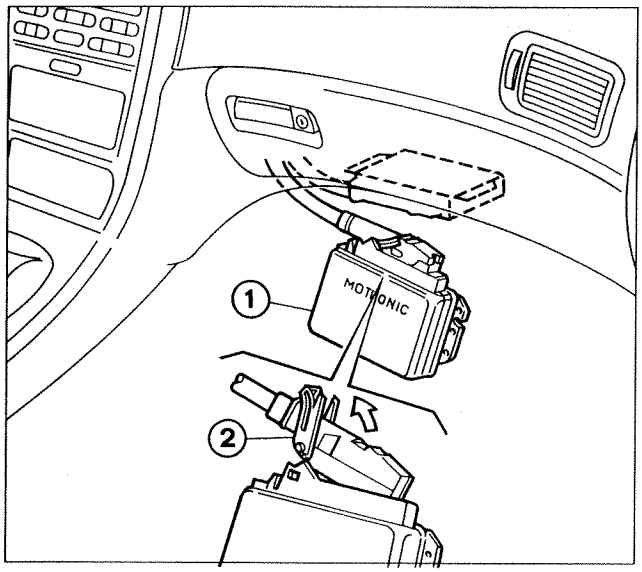

P3U36CX02

REMOVING-REFITTING ELECTRONIC CONTROL UNIT

The electronic control unit is located beneath the oddment box (right hand side). Proceed as follows to remove the ECU:

- Remove lining beneath facia
- Unscrew bolts retaining ECU (1) to mount bracket
- Pull clip for connector (2) upward in order to remove multiple connector

Because unconnected leads may be live, do not make any connections otherwise ECU may short-circuit.

Always fit and remove multiple extractor with ignition key out.

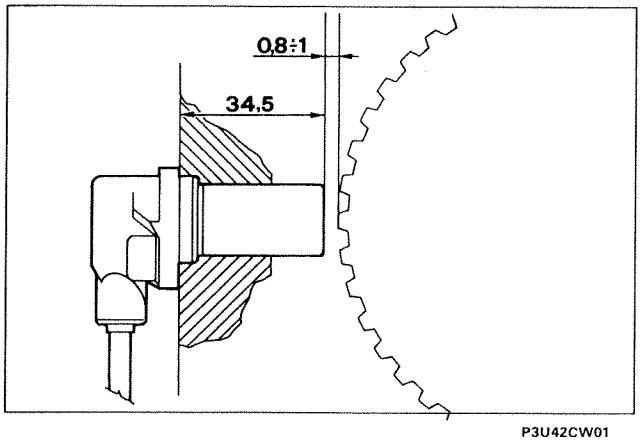

P3U42CW01

When measuring the gap, ensure phonic wheel is positioned at right angles and aligned with a tooth and not a recess.

CHECKING RPM AND TDC SENSOR GAP AND RESISTANCE

The rpm and TDC sensor is fastened directly to the crankcase and does not therefore require adjustments to gap and angular position. If a fault is suspected, gap may be checked as follows:

- remove rpm and TDC sensor;
- check that gap between sensor contact surfaces and phonic wheel teeth corresponds to sum of sensor probe length (34.5 mm) with gap (0.8 - 1.5 mm).

Resistance reading should be between 774 Ω and 946 Ω

CHECKING ENGINE IDLE SPEED

If idle speed is not 800 ± 50/min, the adjustment cannot be carried out because the injection-ignition ECU is self-regulating. The position of the accelerator linkage must therefore be checked and then the fault detected by means of full diagnosis using a Fiat/Lancia Tester.

CHECKING LEVELS OF POLLUTING EMISSIONS

The Motronic 2.10 system self-adaptive function continually controls idle speed and CO level so that any external regulations are unnecessary (adjustment screws are no longer fitted). A check on the exhaust emissions downstream of the catalytic converter can nevertheless provide useful information on injection-ignition system operation, engine parameters and the catalytic converter

Checking CO and HC levels when idling

Measure levels of carbon monoxide (CO) and unburnt hydrocarbons (HC) with catalytic converter at service temperature (300 - 350 °C) (it is advisable to drive along a stretch of road at speed for 5 - 10 minutes in order to ensure that converter has reached service temperature. Then insert the probe of an appropriately calibrated tester until at least 30 cm inside tail pipe as shown in figure.
If exhaust tail pipe shape will not permit the probe to be fully inserted, add an extension pipe and ensure joint area is well sealed.

1. Check that idling CO and HC levels are as specified (see table)
2. If CO level is not as specified, check the following:
   - Lambda probe operation, using a Fiat/Lancia Tester;
   - for air leaks in the area around the Lambda probe seat;
   - the injection and ignition system **(particularly spark plug wear).**
3. If HC level is not as specified, engine has not been properly tuned or catalytic converter is inefficient.

CO (%)	HC (p.p.m.)	CO_2 (%)
≤ 0.35	≤ 90	≥ 13

Summary table showing emission level tolerances downstream of converter

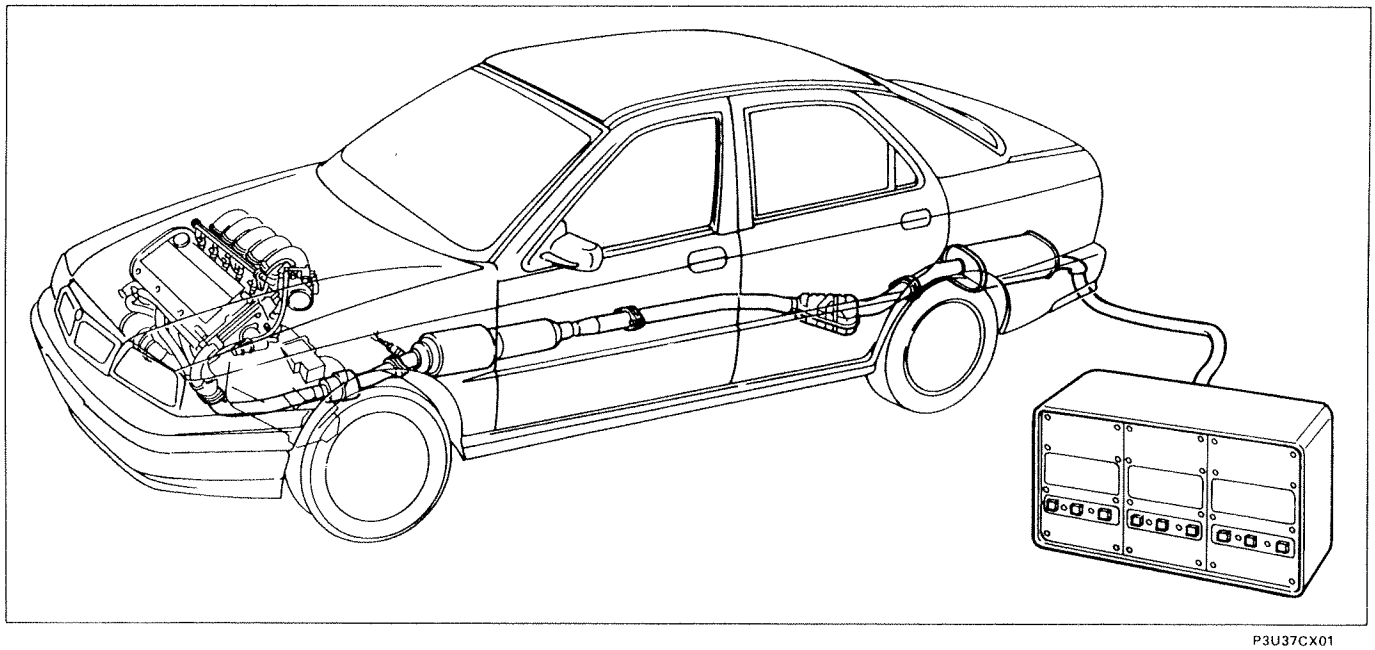

P3U37CX01

Copyright Fiat Auto

BOSCH MOTRONIC M 2.10 MPI INTEGRATED INJECTION-IGNITION SYSTEM (1996 range)

Introduction

The LANCIA k 1998 20v 1996 range differs from the previous version because it is fitted with variable geometry intake ducts.
Refer to the fuel system section for 2446 20v engine version for a description of the system (including component location) and wiring diagram.

System components

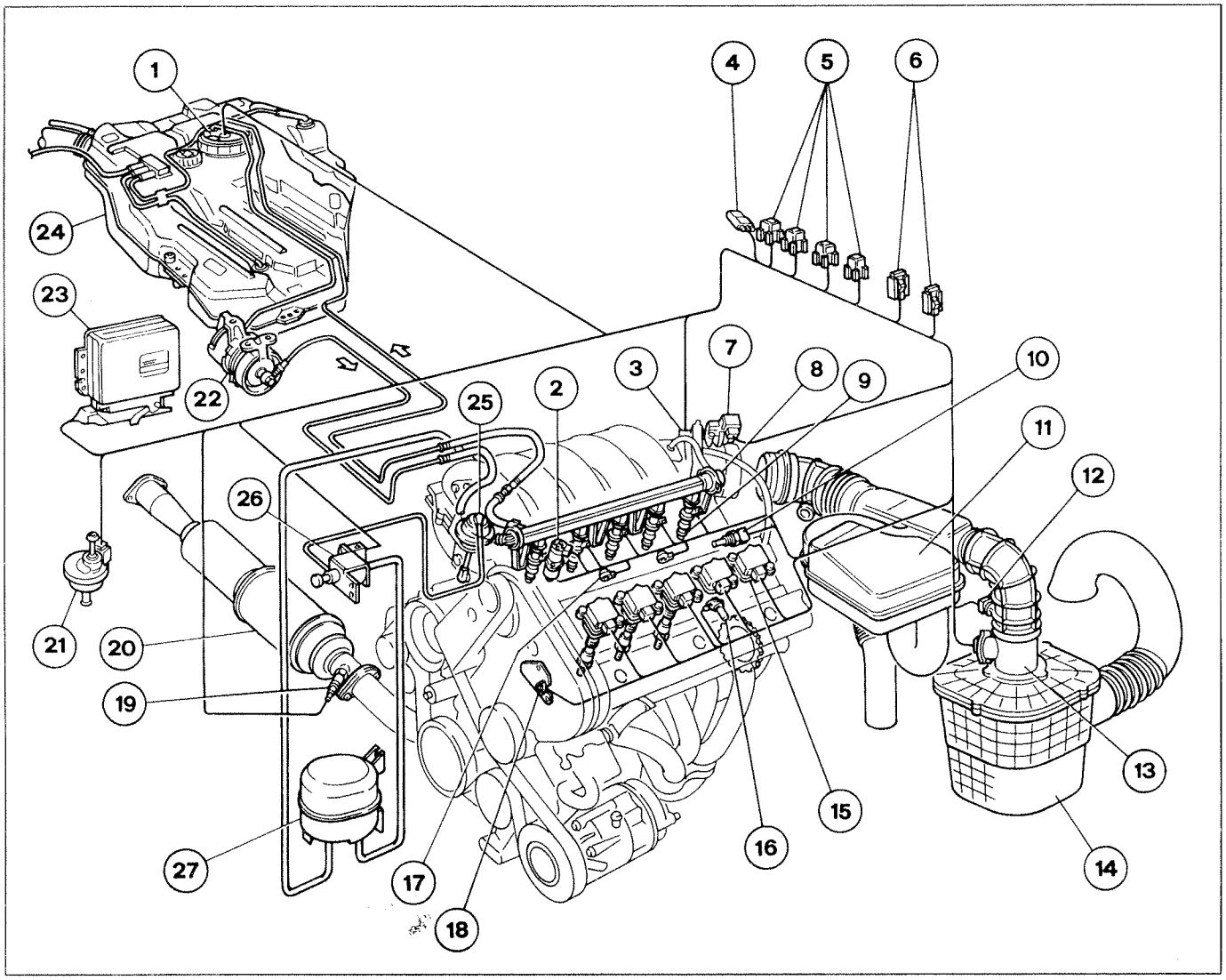

P3U01DW01

1. Electric fuel pump
2. Timing variator control solenoid
3. Throttle position sensor
4. Diagnostic socket
5. Relay unit
6. Fuel pump fuse and lambda probe
7. Idle speed actuator
8. Fuel pressure regulator
9. Injectors
10. Engine coolant temperature sensor
11. Resonator
12. Intake air temperature sensor
13. Air flow meter (debimeter)
14. Air cleaner
15. Ignition coils
16. Rpm and TDC sensor
17. Knock sensors
18. Cam angle sensor
19. Lambda probe
20. Catalytic converter
21. Fuel vapour control solenoid
22. Fuel filter
23. Injection-ignition ECU
24. Fuel tank
25. Pneumatic actuator
26. Pneumatic actuator control solenoid
27. Vacuum accumulator

page

BOSCH MOTRONIC M 2.10 M.P.I. INTEGRATED INJECTION-IGNITION SYSTEM 1
- Introduction 1
- System components 1
Air intake circuit 2
Variable geometry air intake ducts 3

- Introduction 3
- Principle of operation 3
- Diagram showing electric/air connections to variable geometry intake ducts 4

Pneumatic actuator three-way control solenoid 6
Vacuum accumulator 6
Pneumatic actuator 6
Identifying connections on control unit 7

Electrical connections between ECU/sensors and actuators 8
Electrical connections between ECU/ignition coils and injectors 9
Location of components in engine bay 10
Diagram showing ECU data input and output 11

Copyright Fiat Auto

COPYRIGHT Fiat Auto S.p.A.

Reproduction of all or part of the text and illustrations is prohibited.

The information in this publication is intended as a guide and could be superseded by modifications introduced by the Manufacturer at any time for technical and commercial reasons or in accordance with local regulations.

Fiat Auto S.p.A.
Direzione Marketing Commerciale
Direzione Post-Vendita - Servizi Assistenziali
10134 TURIN (Italy) - Corso E. Giambone, 33
Print no. 506.475/01 - Ottobre 1994 - 500
Printed in Italy - Tip. Europrint - Torino

BOSCH MOTRONIC M 3.7 MPI INTEGRATED INJECTION-IGNITION SYSTEM

General system description

The injection/ignition system is managed by a Bosch Motronic electronic control unit, version M 3.7.
The Motronic M 3.7 system manages engine injection and ignition by monitoring and adjusting all operating parameters. This management type helps optimise performance and fuel economy through real-time responses to a range of engine service conditions.
The ignition system is static with a coil for each spark plug.
This self-adaptive system is able to recognise changes in the engine and compensate for them through adaptive functions that correct fuel injection and air flow curves mapped in the ECU.
The system adopts one of two specific adaptive functions according to whether the evaporation control solenoid is open or closed, plus an adaptive plan for engine idling. The idling plan effectively compensates for air leaks.
Continual self-adaptation of the fuel injection plan ensures the correct amount of fuel is metered under all temperature and altitude conditions.
After each repair, the vehicle should therefore be driven for at least 15 minutes to enable the control unit to memorise changes in the system and adapt accordingly.

System components

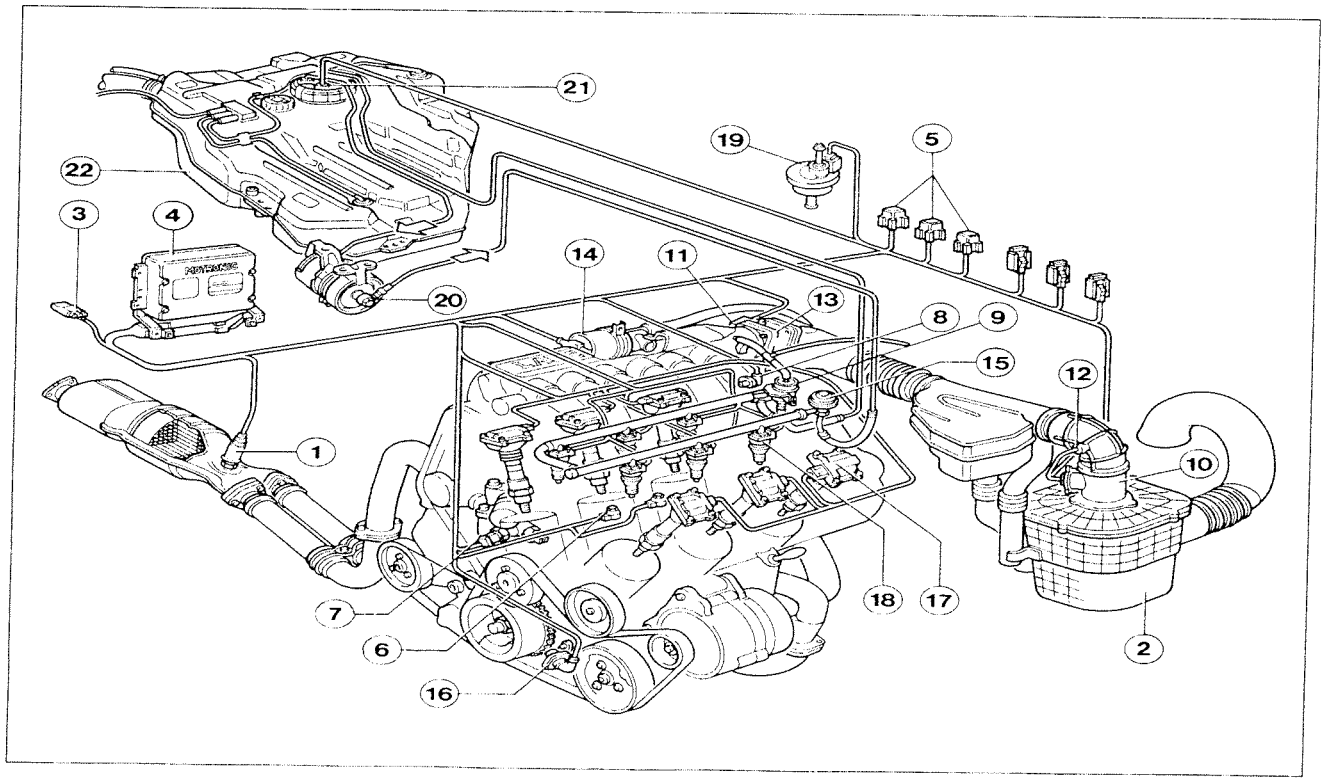

P3U018X01

1. Lambda probe
2. Air cleaner
3. System tester point (Fiat/Lancia Tester)
4. Ignition/injection control unit
5. Relay unit
6. Knock sensor
7. Coolant-temperature sensor (NTC)
8. Cam angle sensor
9. Fuel pressure regulator
10. Air flow meter (debimeter)
11. Throttle potentiometer
12. Intake air temperature sensor
13. Butterfly valve case
14. Constant idle actuator
15. Pulse damper
16. Rpm sensor
17. Ignition coils
18. Injectors
19. Evaporation solenoid
20. Fuel filter
21. Electric fuel pump
22. Fuel tank

Copyright Fiat Auto

SYSTEM FUNCTIONS

System functions are essentially as follows:

- connection with immobiliser (Lancia CODE);
- governing injection time;
- adjusting ignition advance;
- cold start control;
- enrichment during acceleration;
- fuel cut-off during over-run;
- idle management
- restricting maximum rpm levels
- controlling combustion-lambda probe;
- fuel vapour recovery;
- connection with heating/ventilation system;
- connection with electronic automatic transmission control unit (where fitted);
- connection with ABS control unit;
- automatic diagnosis.

SYSTEM OPERATING STRATEGIES

Connection with immobiliser (Lancia CODE)

For a description of the connections between injection-ignition ECU and Lancia CODE control unit, consult the "Fuel system" section for the 1998 20v engine version.

Governing injection time

Digital technology has made it possible to optimise fuel economy and performance by means of programmed rpm and engine load maps memorised inside the ECU.
The control unit is able to control injectors with extreme speed and accuracy with the aid of sensors designed to record the array of parameters involved.
Injection time is corrected mainly on the basis of battery voltage and engine temperature.

Adjusting ignition advance

The ECU uses internal memory maps to compute advance on the basis of engine load, intake air temperature and engine temperature.
Ignition can be delayed selectively in the required cylinder. This is identifiable through a combination of values recorded by knock and cam angle sensors.

Cold start control

The system controls ignition advance and injection time during cold starts.
Ignition time is solely dependent on rpm and engine temperature. Peak injection time occurs at a temperature of -6°C.
Injection time is obtained from a value programmed in the ECU and corrected by measuring intake air temperature, engine temperature, battery voltage and engine rpm.
During start-up, the ECU injects upon each ignition pulse and thus in six stages for each engine cycle.
Once a given rpm is reached (pre-established according to engine temperature), the ECU restores injection control to each crankshaft revolution.

Enrichment during acceleration

When the driver accelerates, if the air flow meter signal increase exceeds a given level, the ECU not only adapts injection to the new requirement but also increases it further to achieve the required rpm level swiftly.
As the required rpm level approaches, the injection increase is gradually eliminated.

NOTE *The acceleration requirement is also measured by a potentiometer on the throttle. This ensures the vehicle can be driven to a Service station under optimal conditions in the case of a fault in the air flow meter.*

Fuel cut-off during over-run

Fuel cut-off during over-run is adaptive.
With throttle closed and rpm level greater than 1700 (for engine speed lower than 1700 rpm, the Cut-off function is inoperative to maintain optimum driveability. Fuel injection is deactivated.

When the fuel flow ceases, rpm begins to drop at a varying rate according to vehicle driving conditions.

Before reaching idling level, rpm drop rate is checked.

If the fall exceeds a given level, fuel flow is partly restored in accordance with a cushioning strategy designed to prevent the engine stalling when idling.
Once this condition is achieved, normal idling functions are restored and cut-off is reactivated only when the fuel cut-off threshold is exceeded to prevent engine working in starts. Fuel restoration and cut-off thresholds vary according to engine temperature.

Another ECU fuel cut-off strategy intervenes during partial deceleration, i.e. when lower engine load is required.
This function is active only if the new situation lasts for a pre-established time and after adapting ignition advance angle to the new situation.

Idle management

Idle speed is adjusted under all service conditions by means of a constant idle actuator that acts on the throttle by-pass.
This not only controls idle speed but also acts as additional air box and governor for activation of various appliances (e.g. air conditioning compressor). When the throttle is closed, the actuator governs by-pass gap to compensate for appliance power demand in order to maintain idle speed as constant as possible around a level of 700 rpm.
The actuator fitted to this version ensures extremely prompt adjustment because by-pass opening and closure are both controlled by magnetic coils.
Idle speed is corrected not only by the constant idle actuator but also through ignition angle adjustment (advance) because the latter acts more quickly.

NOTE *The self-adaptive function does away with the need for idle speed adjustment. The butterfly valve case sensor recognises when the throttle is closed and thus corrects any effects of wear on throttle closure position that may arise in time.*

Restricting maximum rpm levels

On the V6 24v engine version with manual gearbox, once a threshold of 7100 rpm (6500 rpm for V6 24v vehicles with electronic automatic transmission) is reached, fuel injection is cut off to prevent engine overload and protect against speed surges.
For the version with electronic automatic transmission, a special function restricts rpm in case the gear selector lever is accidently engaged in "drive" position with high rpm in order to prevent damage to the gearbox.

Checking combustion - Lambda probe

The lambda probe informs the ECU on progress of air-fuel mixture combustion (LEAN MIXTURE and RICH MIXTURE).
To obtain an optimal mixture, the amount of air taken up by the engine must be the same as the theoretical amount necessary to burn all the fuel injected.
In this case, the lambda factor is said to be equal to 1.
The lambda probe is fitted in contact with exhaust gas and generates an electrical signal with voltage dependent on gas oxygen levels.
This voltage changes abruptly when mixture composition deviates from a value of $\lambda = 1$

Copyright Fiat Auto

When the probe provides a low voltage level (less than 200 mV) the ECU recognises that the mixture is lean ($\lambda > 1$) and slightly increases the quantity of fuel injected.
When the probe supplies a high voltage level (greater than 800 mV) the ECU recognises that the mixture is rich ($\lambda < 1$) and thus decreases the amount of fuel injected.
The lambda probe alters injection time so that measurements fluctuate between these two voltage levels. In other words, lambda factor is between 0.986 and 1.006; close to the theoretical level of 1

Connections with ABS control unit

When connected to the ABS control unit, the Motronic system implements a fast idle strategy, i.e. makes the fall-off in idle rpm more gradual (when accelerator pedal released abruptly with engine speed high).

Fuel vapour recovery

Fuel vapours (pollutants according to regulations) are collected in a liquid-vapour separator (canister) where they condense and return in liquid form to the tank through fuel lines.
Remaining vapours leaving the separator are directed to the engine where they are burnt. This is carried out by a solenoid controlled by the ECU in accordance with a specific strategy.
The solenoid remains closed at first (60 seconds) before opening with a certain gradient for 90 seconds.

The lambda probe simultaneously records fuel combustion. If no changes are noted in relation to the base-line map, the ECU closes the solenoid.
If fuel combustion alters, i.e. the canister requires flushing, the ECU extends solenoid opening time for a further 90 seconds.
Specified canister flushing flow rate (solenoid opening) is 1% of air flow measured by debimeter. This ensures the adaptive plan is as balanced as possible in order to obtain a constant flushing level with regard to air quantity measured by the debimeter. Driveability is thus affected as little as possible.

Connection with heating/ventilation system

When the air conditioner is turned on the compressor takes up power from the engine, which will tend to stall if idling. To avoid this problem, the control unit adjusts air flow to the new power requirement by driving the appropriate actuator (adjustment also occurs throughout the range of service conditions to maintain optimal driveability). The system also cuts off the supply to the compressor for 5-10 seconds if high power demands are made on the engine (high acceleration).

Connections with electronic automatic transmission control unit

The injection/ignition system sends the following information to the electronic automatic transmission ECU:

- engine rpm signal: used as a parameter for protective check against rpm surges (jumps in rpm are not permitted) and to check engine torque reduction;
- throttle opening angle and engine temperature signal: used to calculate gear change points, according to vehicle speed and program selected by driver;

- engine load signal: used to compute modulation pressure.

Upon each gear change, the injection/ignition system receives a drive torque reduction signal from the automatic transmission ECU with the aim of reducing gear engagement times.

Automatic diagnosis

The ECU is fitted with an automatic fault diagnosis system. If the system malfunctions, the ECU records the fault and replaces the missing signals with fixed parameters where possible to ensure vehicle can be safely (if not efficiently) driven back to a Service centre.

The ECU may replace readings from the following devices if a fault occurs: air flow meter, idle adjustment actuator, engine temperature sensor, throttle position sensor, vapour recovery solenoid and knock sensors. In the case of faults in the ECU, rpm/TDC sensor or injectors, the system does not identify a fault but the vehicle stops. For faults in the cam angle sensor, the system adopts a safety advance map because it can no longer recognise cylinder experiencing knock. When required, this fault may be read off the control unit using a Fiat-Lancia Tester.

Recording faults:

This is carried out while implementing baseline sensor/actuator management function.

Memorising error and structure of error memory:

The ECU memorises errors in the order they occur. The following are memorised for each error: error location and type, 2 environmental conditions (specific for each fault type) measured at moment fault occurs - and a frequency count.

Defect classification:

If a defect is identified for the first time and error status persists for time $t > 0.5s$, the defect is memorised as "permanent". If the defect subsequently disappears, it is memorised as "intermittent" and "not present". If the fault then reappears, it is memorised as "intermittent", but now becomes "present".

Classifying a fault as "permanent" activates the recovery functions. When the fault reappears, the normal reading or implementation function is restored when the fault disappears.
Some fault types are classified as "important", i.e. significant in terms of emission control regulations. An infocenter tells the user when these faults are present.

Frequency counter:

A frequency counter is assigned to each error. This is used to determine the moment at which a fault that is no longer present occurred. The counter is set to 10 when a fault is first detected. If the fault disappears, the counter remains at its current level. If the fault reappears, the count is increased by 1 (up to a top limit of 60).

The count decreases each time the vehicle is started without the fault reappearing. If the count reaches zero, the fault is automatically deleted from the memory.
If the fault reappears after the count has decreased, the counter is set to 10 (but remains unchanged if already higher than 10).

Deleting errors:

When the frequency counter reaches 0, the fault and associated parameters are deleted.

The entire error memory is deleted immediately in the following cases:
- "delete error memory" command sent by tester;
- supply to control unit cut off (by disconnecting battery or control unit connector).

Active diagnosis:

This is carried out upon a command by the Fiat Tester. The following may be activated: injectors, canister valve, idle actuator, a/c compressor relay, fuel pump relay and EGR.

Copyright Fiat Auto

RECOVERY STRATEGIES

Timing sensor

Recovery: maintains same injection timing. Ignition coils activated in pairs. Knock control is deactivated and corresponding recovery stragegy activated. If error is identified during starting or post-starting, recovery is activated immediately but error is memorised only after 100 engine revolutions.

Debimeter

Recovery: if no error is noted simultaneously for throttle potentiometer, air flow is computed according to throttle opening and rpm. Two output values fixed according to an rpm threshold are used if an error is present in the throttle.
Additional measures: mixture and idling level self-adaption blocked at current values. Canister check blocked for engine loads greater than a given threshold.

Water temperature sensor

Recovery: from time of fault detection, engine T is assumed = air T for two minutes. Engine T subsequently assumed = 80°C.
Additional measures: mixture and idle level self-adaption blocked at current values; ignition advance correction disabled during warm up.

Air temperature sensor

Recovery: air T assumed to be = 20°C
Additional measures: mixture self-adaption blocked at current levels; ignition advance correction disabled during warm up.

Throttle potentiometer

Recovery: 14% opening assumed as fixed value (assume minimum opening 16% for GND d.c. faults).

Additional measures: with debimeter operating, following used to identify the various different throttle statuses:
idle status: air flow < 40 Kg/h;
exit from minimum status: air flow > 40 Kg/h;
full load status: engine load > 6 ms and simutaneous rpm > 3000 RPM;
exit from full load status: engine load < ms or rpm < 3000 RPM.
With simultaneous debimeter failure, throttle operates solely in shut-off with flow computed on the basis of rpm level (see fault diagnosis on debimeter).
A fixed duty cycle of 4% is issued on the PWM line.

Idle actuator

Recovery for faults in opening coil and effect on valve:
- d.c. V battery: closing coil governed (actuator is closed);
- d.c. GND/a.c.: closing coil governed (actuator 50% open in case of GNC d.c., closed in case of a.c.); speed limitation implemented with cut-off.

Recovery for faults in closing coil and effect on valve:
- d.c. V battery: opening coil is deactivated (actuator in rest position). Speed limitation implemented with cut-off.
- d.c. GND/a.c.: opening coil is deactivated (actuator open 50% in case of d.c., closed in case of a.c.); speed limitation implemented with cut-off.

Additional measures: idle self-adaption blocked at current values.

Knock sensor

Recovery: lambda adjustment deactivated; ignition advance reduction activated as a safety measure. Size of this reduction is computed on the basis of engine rpm, engine load, coolant temperature and air temperature.

COMPONENTS OF BOSCH MOTRONIC M 3.7 SYSTEM

The Bosch Motronic M 3.7 injection-ignition system is made up of four interdependent circuits:

A. Fuel supply circuit
B. Air intake circuit
C. Electric/electronic circuit
D. Circuit for checking harmful exhaust emissions

Two additional devices and circuits closely connected to the injection-ignition system are designed to reduce harmful vehicle emissions to bring them into line with USA'83 standards and the more stringent EEC stage 2 regulations. These are as follows:
- fuel evaporation control and vapour recovery circuit;
- crankcase vapour recirculation and recovery circuit.

FUEL SUPPLY CIRCUIT

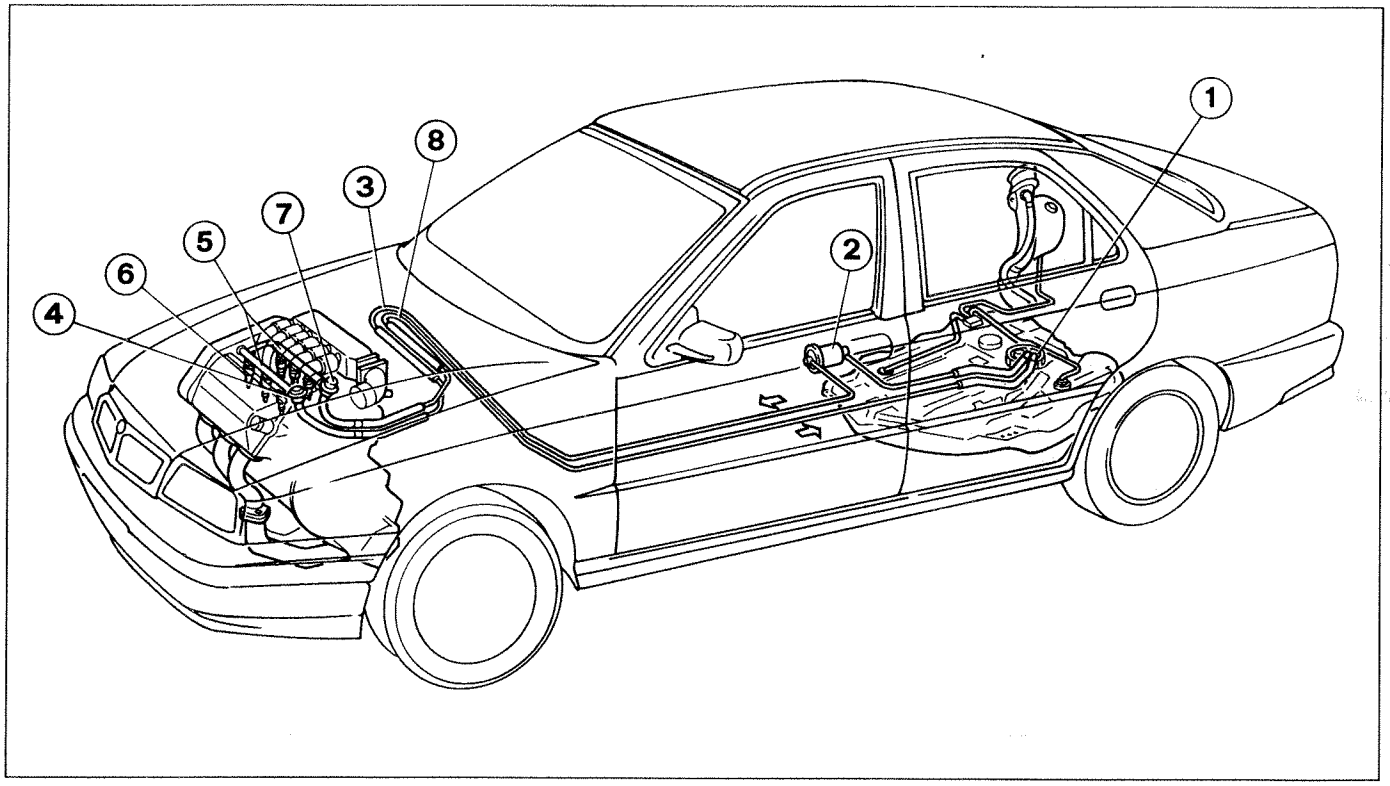

P3U07BX01

1. Submerged fuel pump
2. Fuel filter
3. Outlet line
4. Pressure damper
5. Fuel manifolds
6. Injectors
7. Pressure regulator
8. Return line

A pump submerged in the fuel tank takes up fuel and directs it to the filter and injectors.

A damper on the fuel delivery line damps pressure waves set up in the system.

Fuel delivery pressure to the injectors is maintained constant and proportional to pressure level in the intake manifold by the pressure regulator, which acts on fuel flow to maintain a constant pressure gap to the injectors.
Excess fuel is allowed to flow back, unpressurised, from pressure regulator to tank.

Copyright Fiat Auto

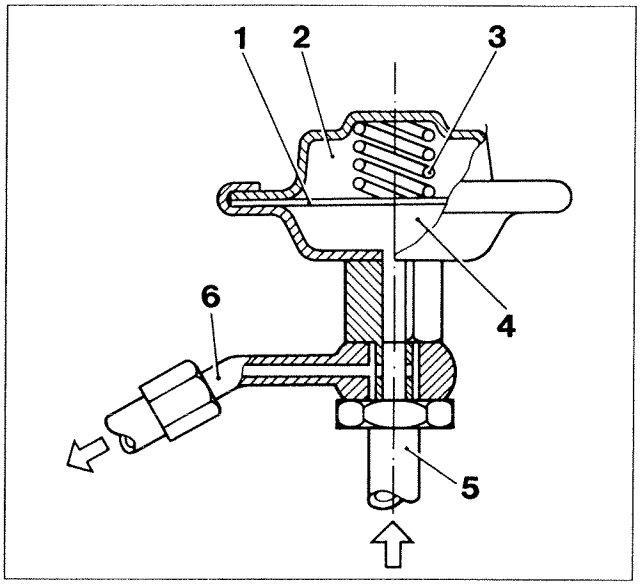

P3U08BX01

Pressure damper

A pressure wave damper is fitted on the fuel system intake, before the manifold carrying fuel to the injectors.

The damper consists of two chambers separated by diaphragm (1). Fuel enters chamber (4) through fitting (5) and leaves through fitting (6), discharging its pressure against the top face of the diaphgram. Atmospheric pressure acts on the other face, summed to force generated by spring (3).
When sudden pressure changes are set up in the system, the damper alters system volume to smooth out peaks and troughs in the pressure curve.

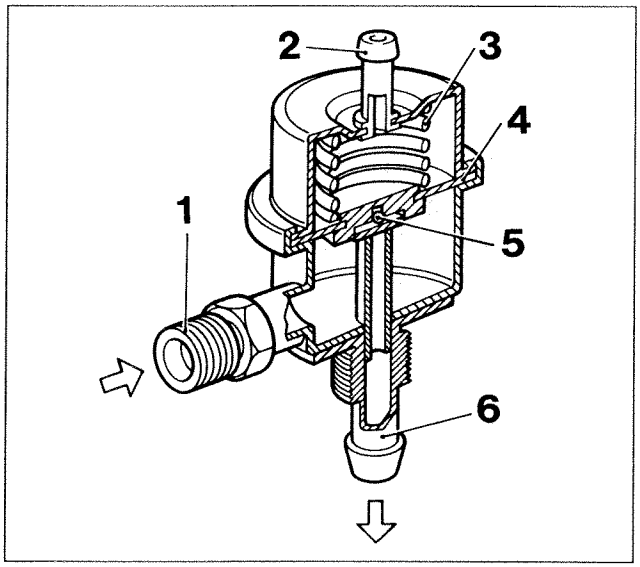

P3U08BX02

Pressure regulator

The mechanical diaphragm-type pressure regulator is fitted downstream from the fuel manifold. It is non-adjustable and set to a pressure of 3 ± 0.2 bar with engine off.
The device consists of a case with two chambers separated by diaphragm (4) to which is connected valve (5). This valve closes reflux duct (6) to fuel tank.

A pipe branching off the fuel delivery circuit to the injectors carries fuel at delivery pressure to lower pressure regulator chamber through port (1).

A vacuum signal from the intake manifold reaches the top chamber through duct (2).

Specially calibrated spring (3) generates a thrust against diaphragm (4) in order to keep reflux duct (6) closed.

The action of spring (3) on diaphragm (1) and thus needle valve (5) is countered by a vacuum in the exhaust manifold and fuel pressure.

Inertia safety switch

The vehicle is fitted with an inertia switch that cuts off fuel flow by deactivating the fuel pump. See "Fuel system" section for 1998 engine for further information.

Electric pump and fuel filter

These components are described in the "Fuel system" section for the 1998 engine.

Fuel manifolds and injectors

Because the engine consists of two separate blocks with 3 injectors each, two fuel manifolds are required. These are connected by pipes.

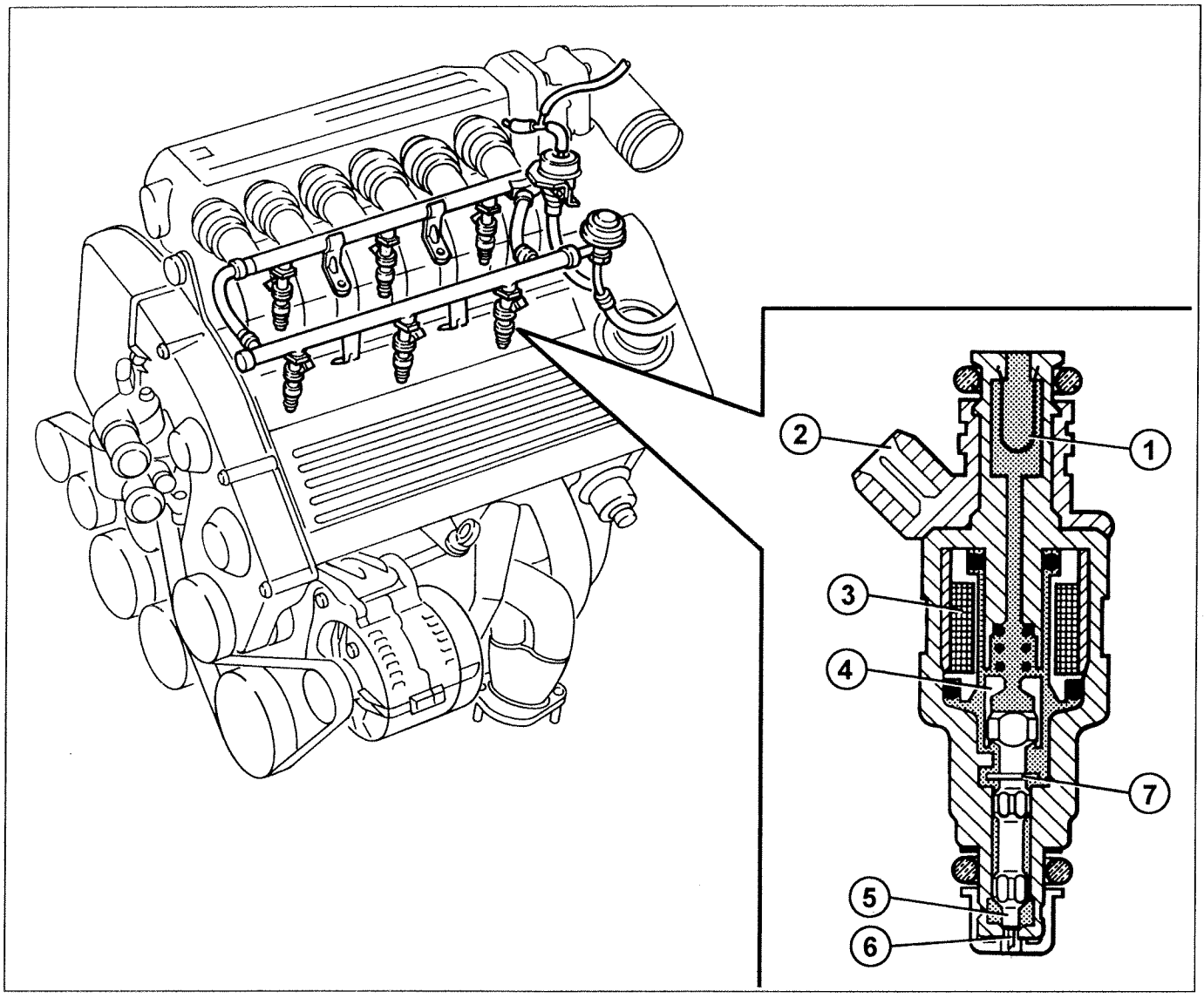

P3U09BX01

Injectors

Fuel is metered by six injectors, positioned three per engine block close to the intake valves. These are connected individually to the injection control unit, which governs them in staged manner.
The injector consists of a case housing a 12V electrical coil (3) and core (4) integral with pintle (6) pushed into its seat by a counter spring.

Voltage pulses from the electronic control unit set up a magnetic field in the coil that attracts the core by raising the pintle in its seat by a few tenths of a millimetre.

Electromagnetic injector longitudinal section

1. Filter
2. Supply connector
3. Magnetic winding
4. Magnetic core
5. Needle nozzle
6. Spray pin
7. End plate

Copyright Fiat Auto

AIR INTAKE CIRCUIT

The air intake circuit consists of the following components:

1. Filter case
2. Hot film debimeter
3. Air temperature sensor
4. Resonator
5. Throttle case with throttle position sensor
6. Intake box
7. Inlet manifold
8. Engine idle speed actuator

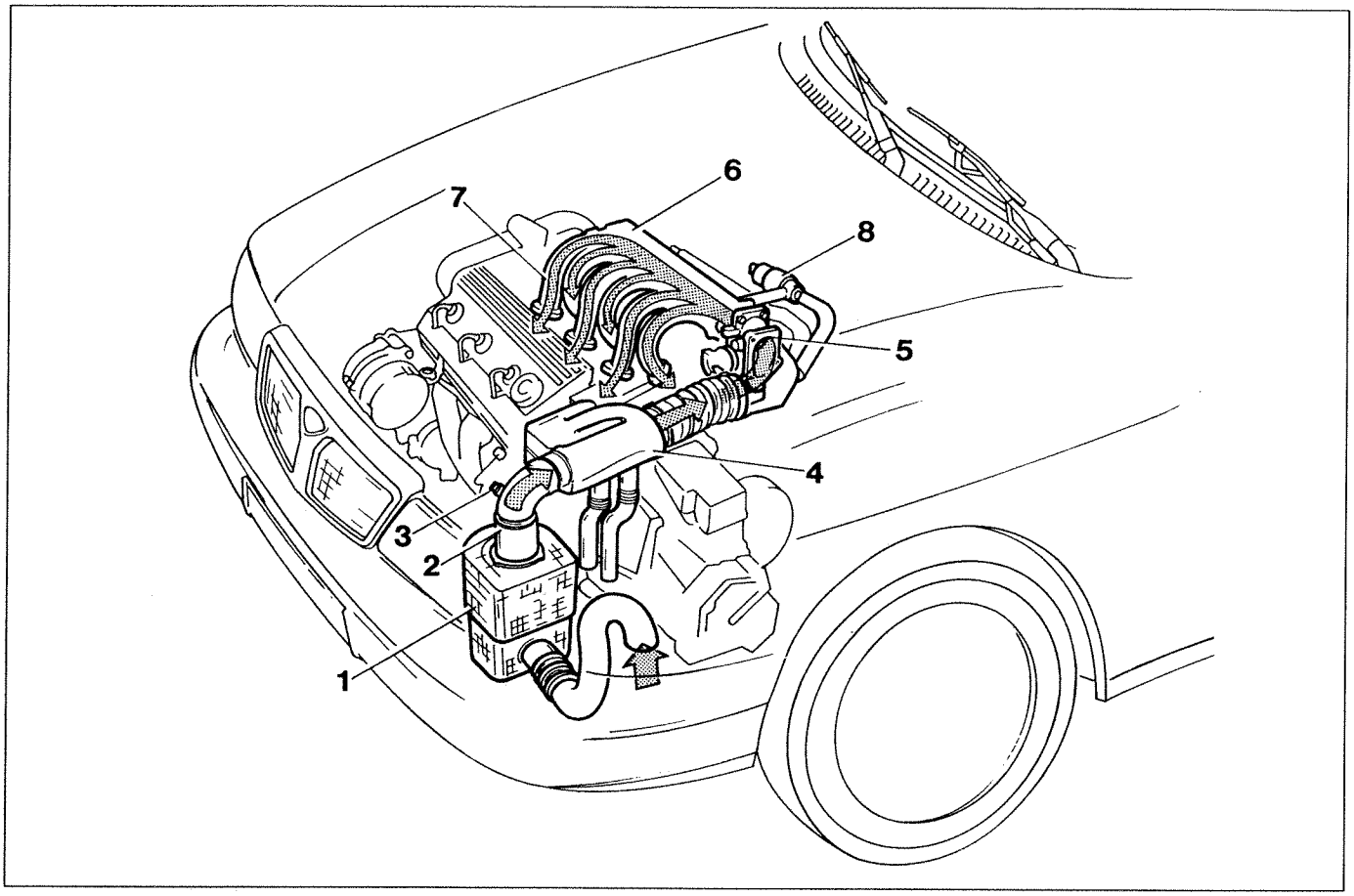

P3U10BX01

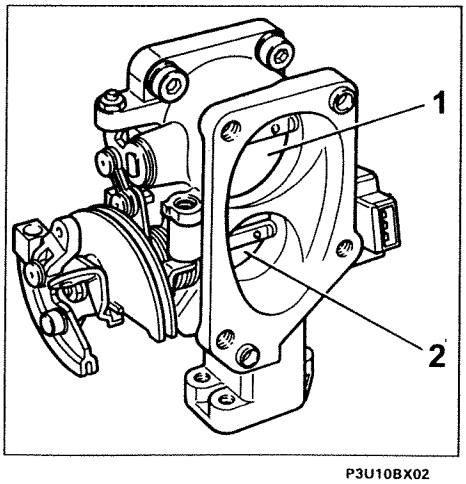

P3U10BX02

Throttle case

A butterfly valve case with two differential opening butterfly valves is a characteristic feature of the 2959 V6 i.e. engine.
The larger diameter top butterfly valve (1) opens under the action of the throttle cable during the first part of its stroke, i.e. when engine is not required to provide maximum power output.

A significant opening change is thus obtained even for small pedal movements, while duct free cross section is relatively large. The intake air loses less load and engine efficiency is greater.

When approaching peak power delivery (final accelerator pedal travel) the first butterfly valve is fully open and the second throttle (2) begins to open. Power delivery is thus modulated more specifically than with only one butterfly valve.

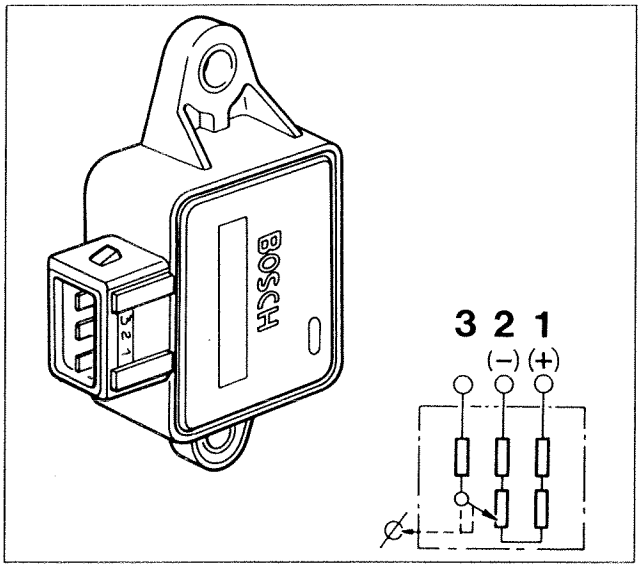

P3U11BX01

Throttle valve position sensor

This consists of a potentiometer with its mobile part controlled directly by the throttle valve spindle.

During operation, an ECU supplies the potentiometer with a voltage of 5 Volt applied to pins (1) and (2).

Pin 3 receives a voltage inversely proportional to the throttle valve opening position. According to the voltage sent to pin 3, the ECU identifies throttle open status and corrects mixture level accordingly.

With throttle closed, an electrical signal of about 0.5 Volt reaches ECU, which identifies idle and cut-off status (differentiating between them on the basis of engine rpm).

The potentiometer automatically recognises throttle fully closed and idling position by means of its self-adaptive function. **This does away with potentiometer adjustment** and allows the effect of wear on throttle closed position to be compensated for with time.

Debimeter

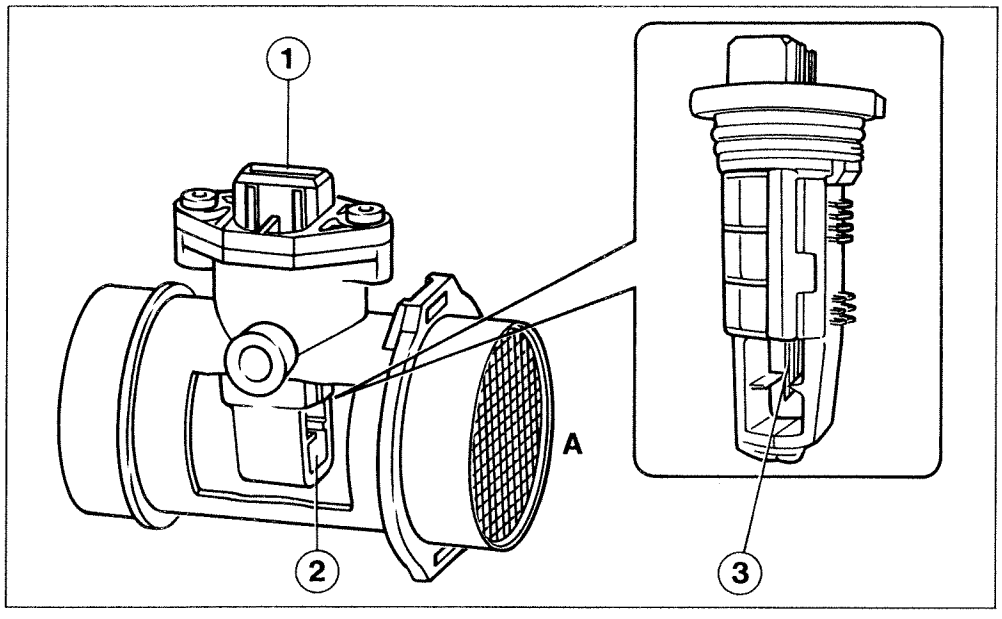

P3U17CX01

1. Connector
2. Measuring channel
3. Hot film sensor

A = Air intake

The air flow meter is of the new hot film type. In this system, a heated film is placed in a measuring channel through which flows air from the engine air intake.

The film is maintained at a constant temperature ($\sim$ 120°C) by an adjacent heating coil.

The mass of air flowing through the measuring channel tends to remove heat from the film. In order to keep the film at a constant temperature, a given current must flow through the heating coil. This current is measured using a Wheatstone bridge

The measured current is therefore proportional to the flowing air mass.

Copyright Fiat Auto

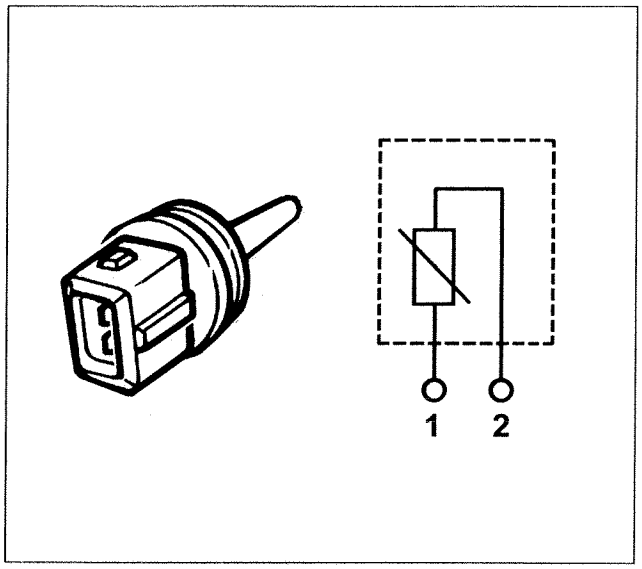

P3U12BX01

Air temperature sensor

The intake air temperature sensor is separate from the air flow meter on this version. It is a normal NTC sensor with resistance level proportional to air temperature.

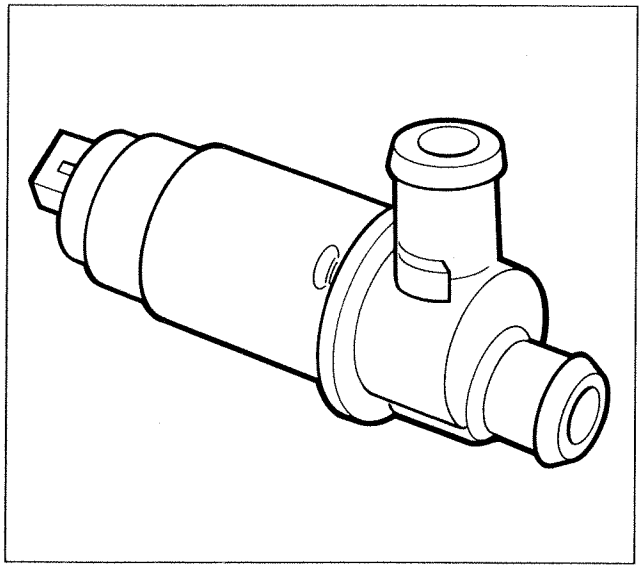

P3U12BX02

Engine idle speed actuator

This electric motor opens a supplementary air passage parallel to duct carrying air leaking through throttle (during over-run) in the butterfly valve case to keep idle speed constant regardless of engine load (supplementary appliances on or off, engine warm or cold etc.).

The distributor is turned to open the passage by electric pulses produced by a specific section of the injection control unit. This turns the distributor one way or the other according to engine rpm.

ELECTRIC/ELECTRONIC CIRCUIT

The electric/electronic circuit comprises:

- Control unit pin-out
- ECU wiring diagram
- System sensors
- System actuators

Only components not included in systems discussed previously will be covered below.

Control unit pin-out

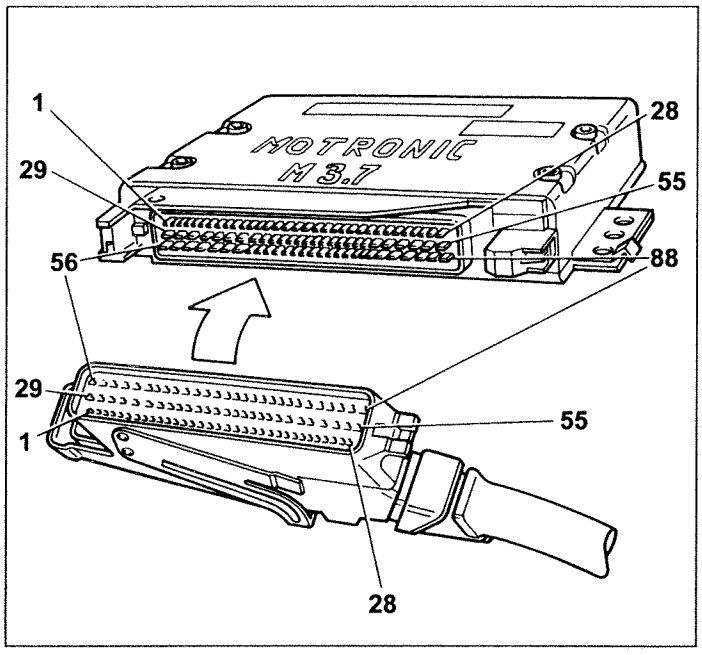

P3U13BX01

1. Fuel pump relay
2. Idle actuator (open)
3. Injector, cylinder n°1
4. Injector, cylinder n°2
5. Injector, cylinder n°3
6. Earth for final stages (injectors)
8. I.E. failure indicator (infocenter)
9. E.G.R. solenoid.
11. Lambda probe earth
12. Lambda probe signal
14. Earth for air flow meter
16. Rpm sensor
23. Ignition cylinder n°3
24. Ignition cylinder n°2
25. Ignition cylinder n°1
26. Power supply (Batt.V)
27. Power enablement (to Motronic relay)
28. Electronic earth (sensor screening)
29. Idle actuator (closed)
31. Injector, cylinder n°4
32. Injector, cylinder n°5
33. Injector, cylinder n°6
34. Earth for final stages (others)
36. Evaporation solenoid
38. P.W.M. signal (automatic transmission)
41. Air flow meter signal
42. Vehicle speed signal output
43. Rpm sensor
44. Cam angle sensor
47. Engine rpm signal output
48. Heating/ventilation system relay
50. Ignition cylinder n°6
51. Ignition cylinder n°5
52. Ignition cylinder n°4
54. Power (from relay Motronic) (Batt.V.)
55. Earth for ignition
56. Locked power source
57. Gear change signal (automatic transmission)
59. 5 V power output
64. Heating/ventilation system signal
65. Heating/ventilation system signal (pressure switch)
66. Anti-theft signal
69. Knock sensor 2
70. Knock sensor 1
71. Earth for knock sensors
72. Reference earth for sensors
73. Throttle angle signal
77. Air temperature sensor
78. Water temperature sensor
81. Neutral signal (automatic transmission)
82. LDA signal (from ABS control unit)
87. Gear change signal (automatic transmission)
88. Fault diagnosis, line K

NOTE: *Terminals not listed are not connected.*

Electrical connections between ECU/sensors and actuators

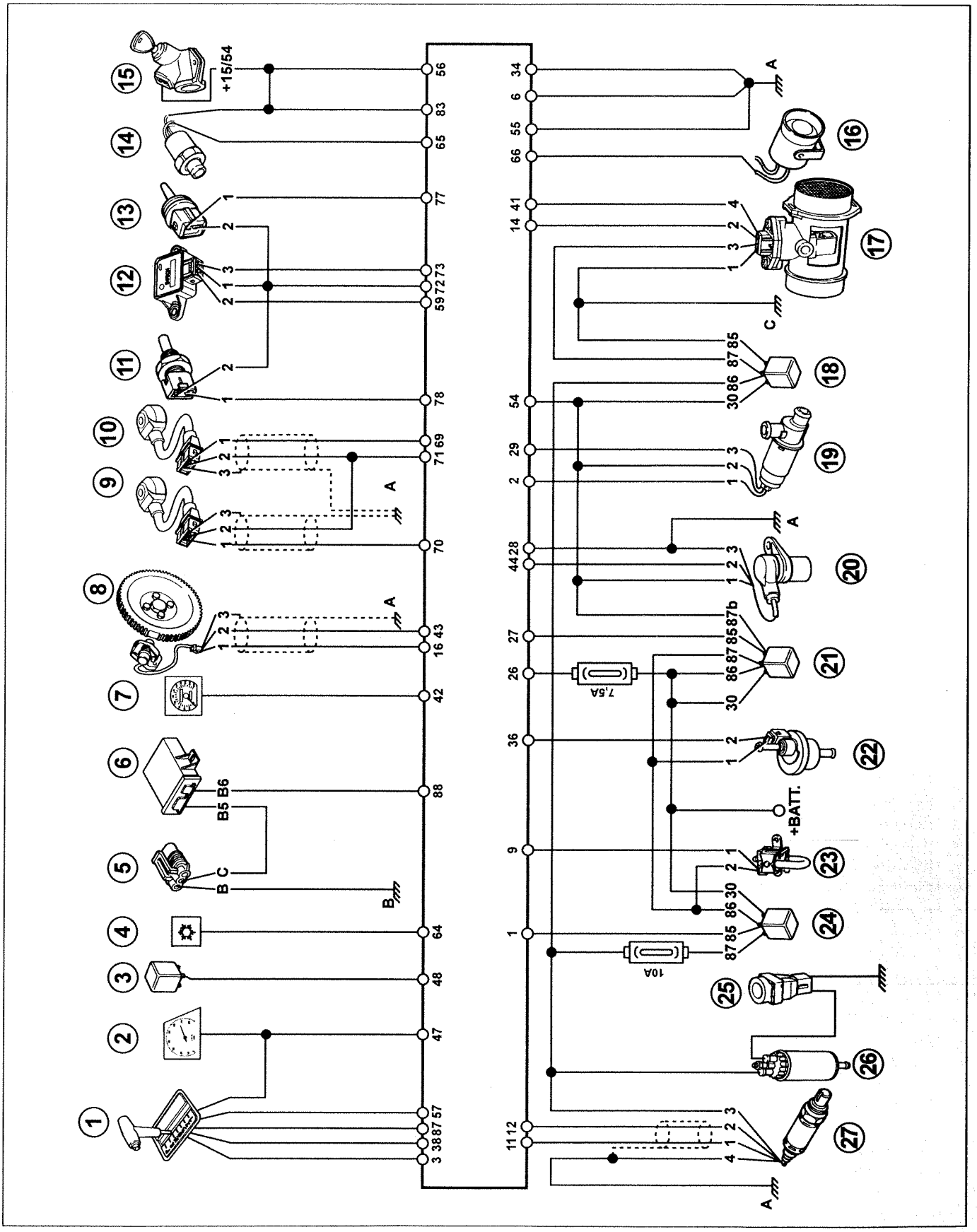

P3U14BX01

Electrical connections between ECU, ignition coils and injectors

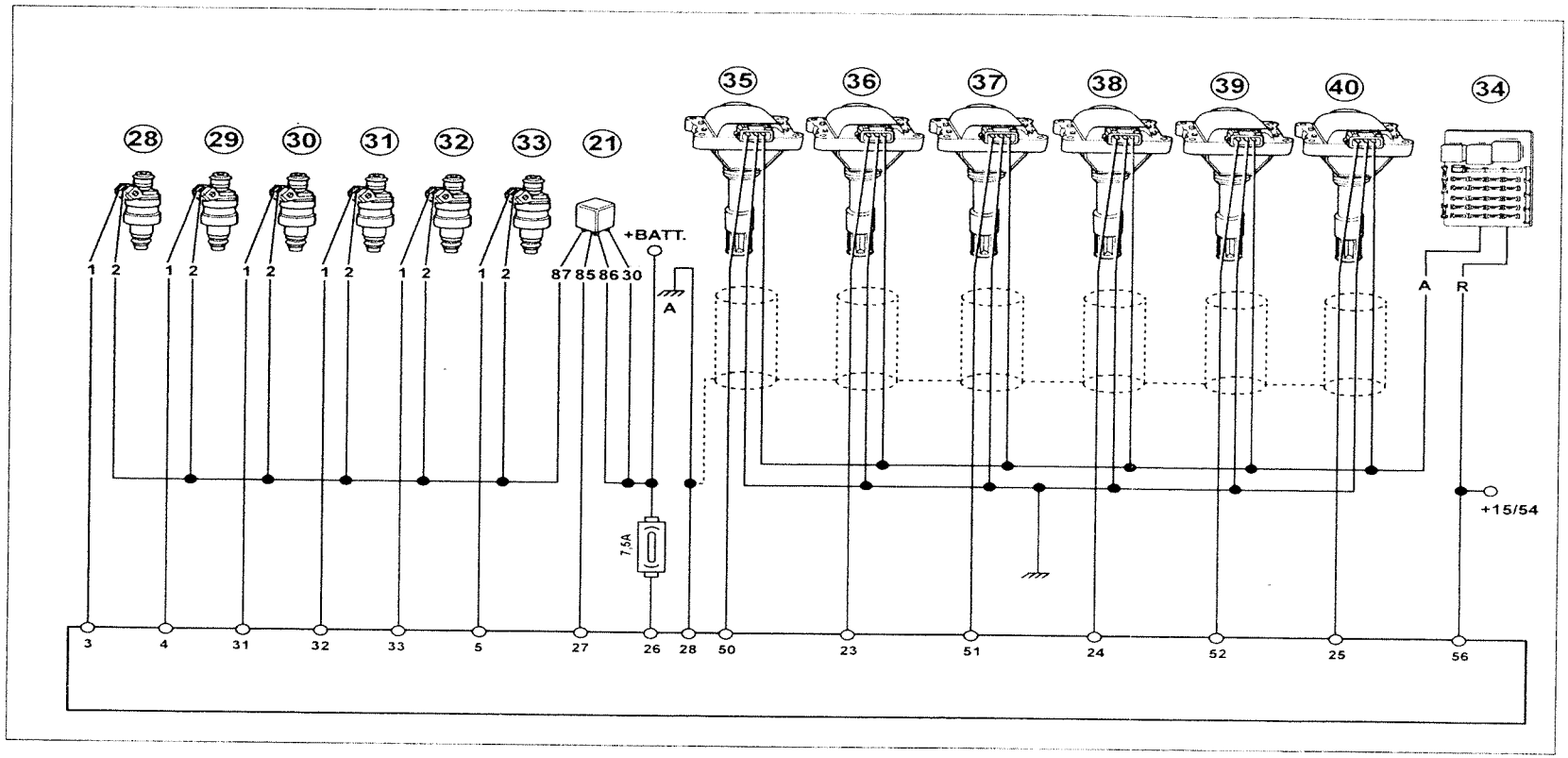

Electrical equipment

Key:

1. Automatic transmission ECU
2. Rev counter signal
3. Air conditioner relay
4. Air conditioner activation button
5. Fiat/Lancia Tester fault diagnosis point
6. Immobiliser control unit
7. Speedometer signal
8. Rpm and TDC sensor
9. Knock sensor 1
10. Knock sensor 2
11. Water temperature sensor
12. Throttle potentiometer
13. Air temperature sensor
14. Three stage pressure switch
15. Ignition switch
16. Antitheft control unit signal
17. Debimeter
18. Debimeter signal
19. Idle motor
20. Cam angle sensor
21. Motronic relay
22. Canister solenoid
23. E.G.R. solenoid.
24. Fuel pump relay
25. Inertia switch
26. Fuel pump
27. Lambda probe
28. Fuel injector
29. Fuel injector
30. Fuel injector
31. Fuel injector
32. Fuel injector
33. Fuel injector
34. Fuse block
35. Ignition coil
36. Ignition coil
37. Ignition coil
38. Ignition coil
39. Ignition coil
40. Ignition coil

Copyright Fiat Auto

Location of components in engine bay

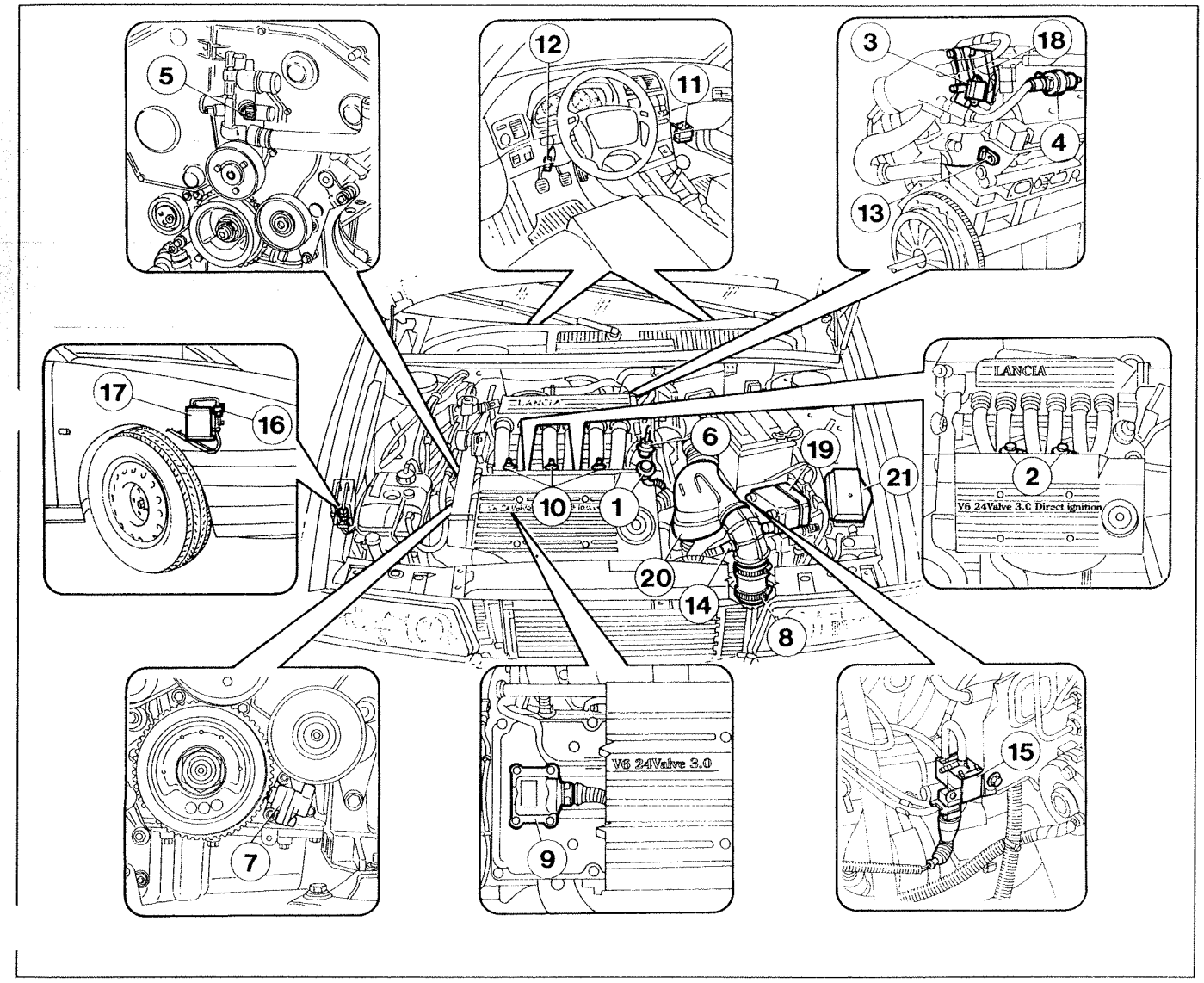

P3U16BX01

1. Pressure damper
2. Knock sensors
3. Throttle position sensor
4. Idle speed adjustment actuator
5. Coolant temperature sensor
6. Fuel pressure regulator
7. Rpm and TDC sensor
8. Air flow meter (debimeter)
9. Ignition coil (one for each cylinder)
10. Injectors
11. Electronic injection-ignition control unit
12. Diagnostic socket
13. Timing sensor
14. Intake air temperature sensor
15. E.G.R. solenoid.
16. Canister solenoid
17. Active carbon trap filter
18. Throttle case
19. A.B.S. control unit.
20. Resonator
21. Relay holder

Diagram of input and output between ECU and system sensors and actuators

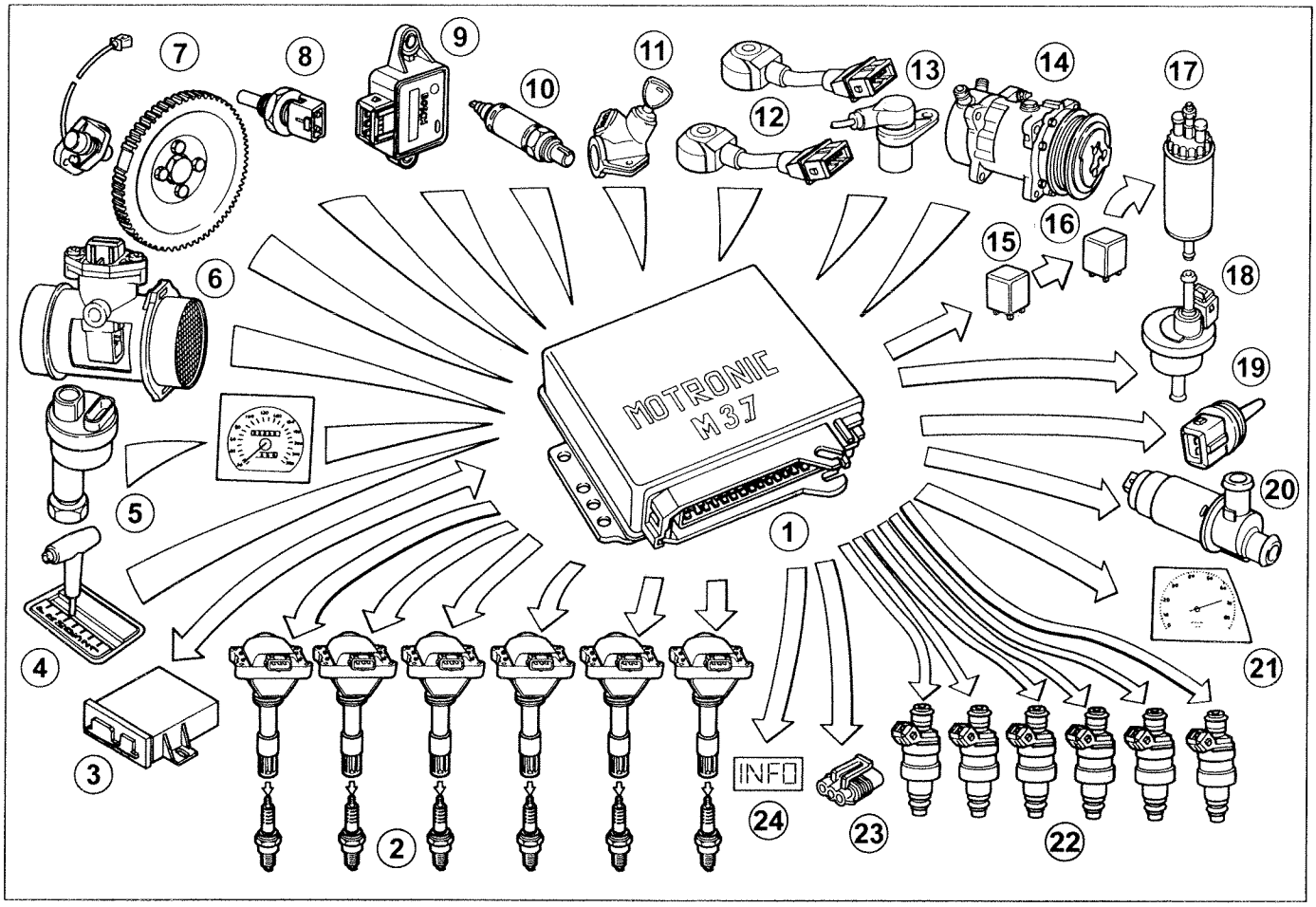

P3U17BX01

System components:

1. Electronic control unit
2. Ignition coils
3. Immobilizer
4. Automatic transmission
5. Speedometer sensor
6. Debimeter
7. Rpm sensor
8. Water temperature sensor
9. Throttle potentiometer
10. Lambda probe
11. Ignition switch
12. Knock sensors
13. Cam angle sensor
14. Air conditioner compressor
15. System relay
16. Pump relay
17. Fuel pump
18. Fuel vapour intake solenoid
19. Air temperature sensor
20. Idle actuator
21. Rev counter signal
22. Injectors
23. Diagnostic socket
24. Infocenter

Copyright Fiat Auto

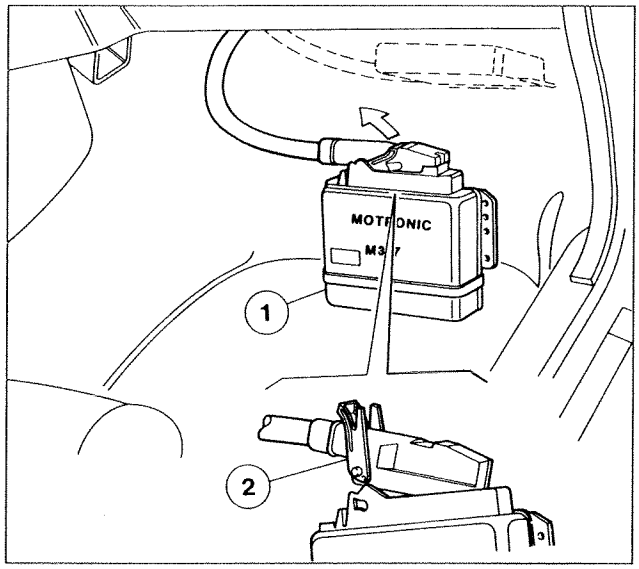

P3U19BX03

Location of ECU

The control unit is located under the oddment box (right-hand side)
Proceed as follows to remove the ECU:

- Remove under-facia trim
- Unscrew both bolts retaining control unit to mount bracket
- To remove multiple connector, pull connector clip (3) upwards

1. Electronic control unit
2. Clip retaining multiple connector to ECU

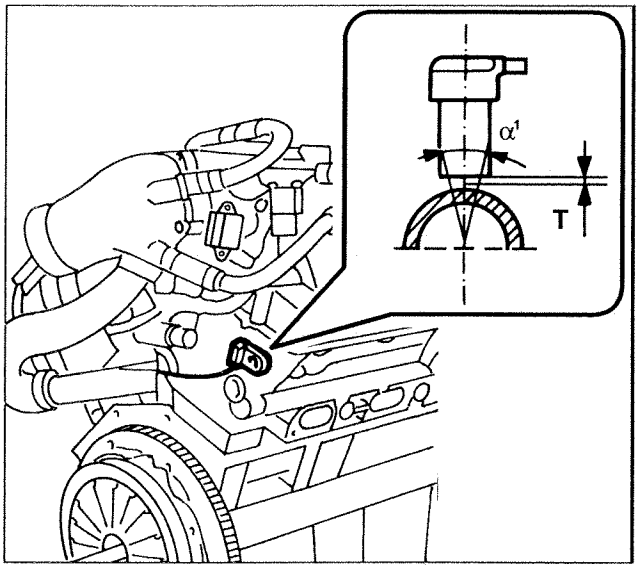

P3U19BX01

Cam angle sensor

The timing sensor (cam angle sensor) works on the principle of Hall's effect.
The voltage signal drops suddenly when a tooth on the camshaft passes in front of the sensor.

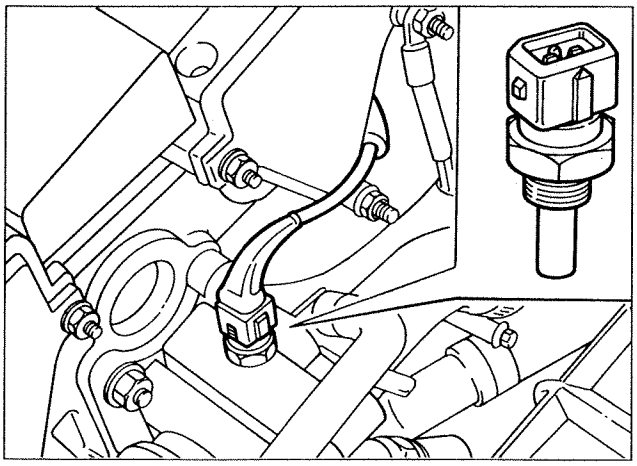

Coolant temperature sensor

The sensor is fitted with its sensitive part in contact with the coolant. The voltage it supplies to the ECU varies according to engine temperature in order to correct air flow meter data. According to the signal received from the sensor, the ECU can therefore increase fuel injection time to provide the necessary enrichment and make up for fuel loss due to condensation of fuel particles on intake ducts when the engine is not running at service temperature.

This sensor therefore safeguards engine operation during the stage subsequent to start-up by adding a further period of enrichment with intensity and duration dependent on coolant temperature. It also permits efficient engine operation during acceleration with engine cold.

Single coil

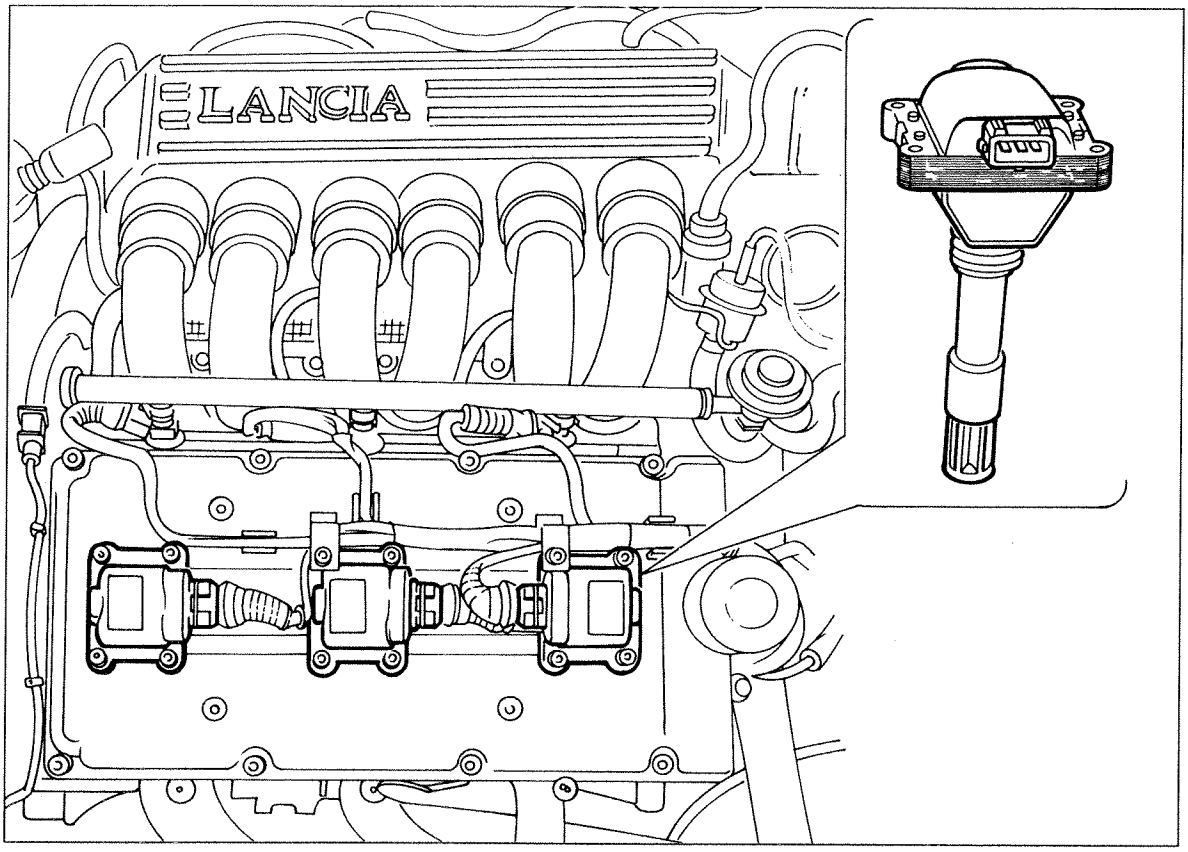

P3U20BX01

The static electronic ignition has been improved by adding a single coil for each spark plug. The power modules are also contained inside the ECU. This solution practically does away with the H.T. circuit and thus further increases reliability and safety while reducing the risk of fouling by high tension leads and connections.
In this system, one normal coil raises the voltage of the pulse directed to the spark plugs. Each individual coil, connected to the cylinder head, supplies a spark plug directly without intervening H.T. leads.

The coil wiring diagram is shown in the diagram.

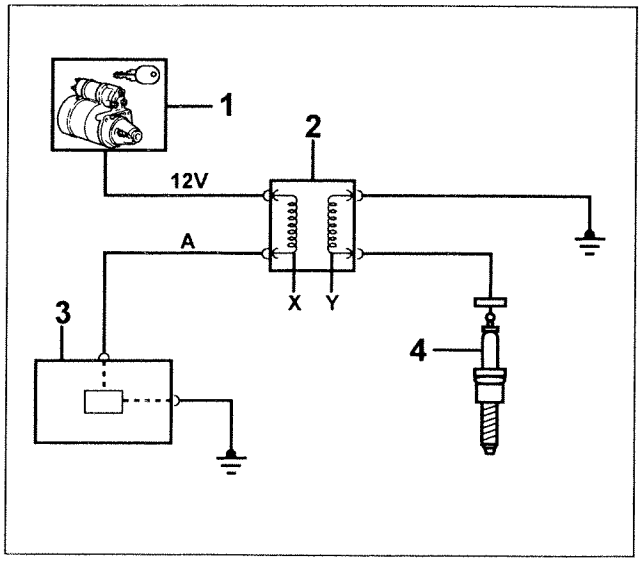

P3U20BX02

1. Power from ignition switch
2. Single coil
3. Electronic control unit
4. Spark plug

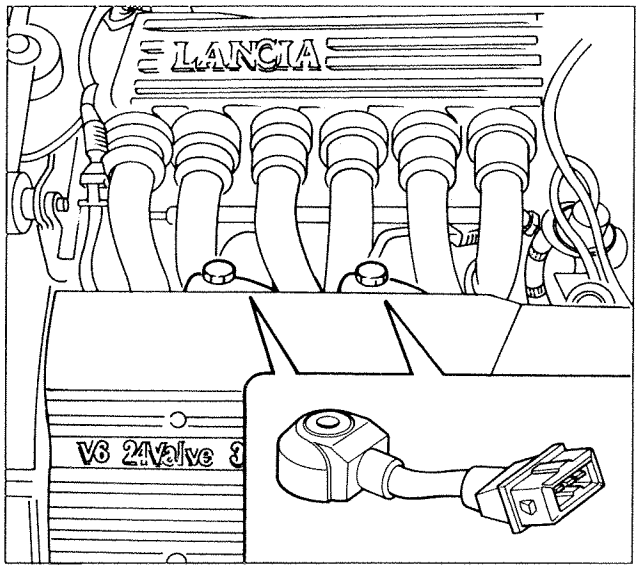

P3U21BX01

Knock sensors

The knock sensors are located on the engine block, beneath the intake manifolds.
A through bushing safeguards against the risk of tightening to an incorrect torque. **When replacing, do not fit washers or shims between crankcase mating surfaces and sensor.**

Vibrations of a given frequency are set up in the crankcase when knock occurs in the engine.
The knock gives rise to mechanical effects on a piezoelectric crystal, which sends a signal to the ECU. An ignition delay strategy is then implemented on the basis of this signal.

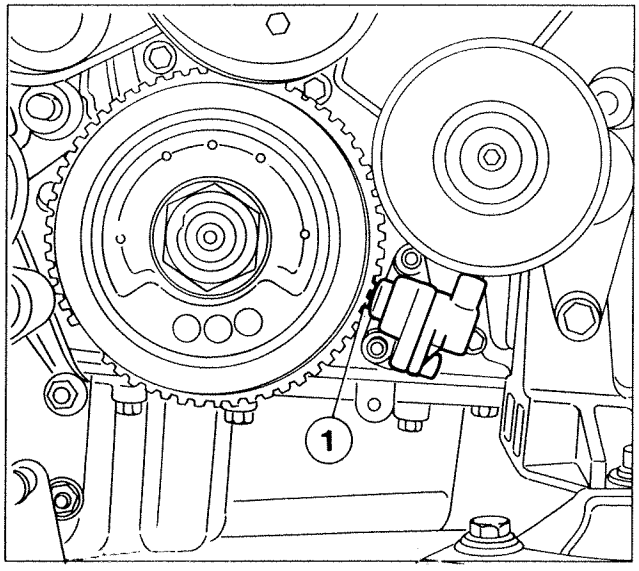

P3U21BX02

RPM and TDC sensor

The sensor used for measuring rpm and TDC is inductive. In other words, it works by altering the magnetic field generated by teeth passing in front of a toothed pulley (phonic wheel) fitted to the crankshaft.

The teeth passing in front of the sensor alter the gap between pulley and sensor. The dispersed flow thus alters to set up an alternating voltage with amplitude dependent on rpm.

The phonic wheel consists of 58 denti plus a gap equivalent to two missing teeth.

This reference gap is used as a base for measuring synchronism point (TDC).

The synchronism point is delimited by tooth (1). When this passes beneath the sensor, the crankshaft is positioned with piston pair 1-4 at 114° before TDC.
The ECU uses this signal to compute ignition advance angles.

CIRCUIT FOR CHECKING HARMFUL EXHAUST EMISSIONS

Emission control system

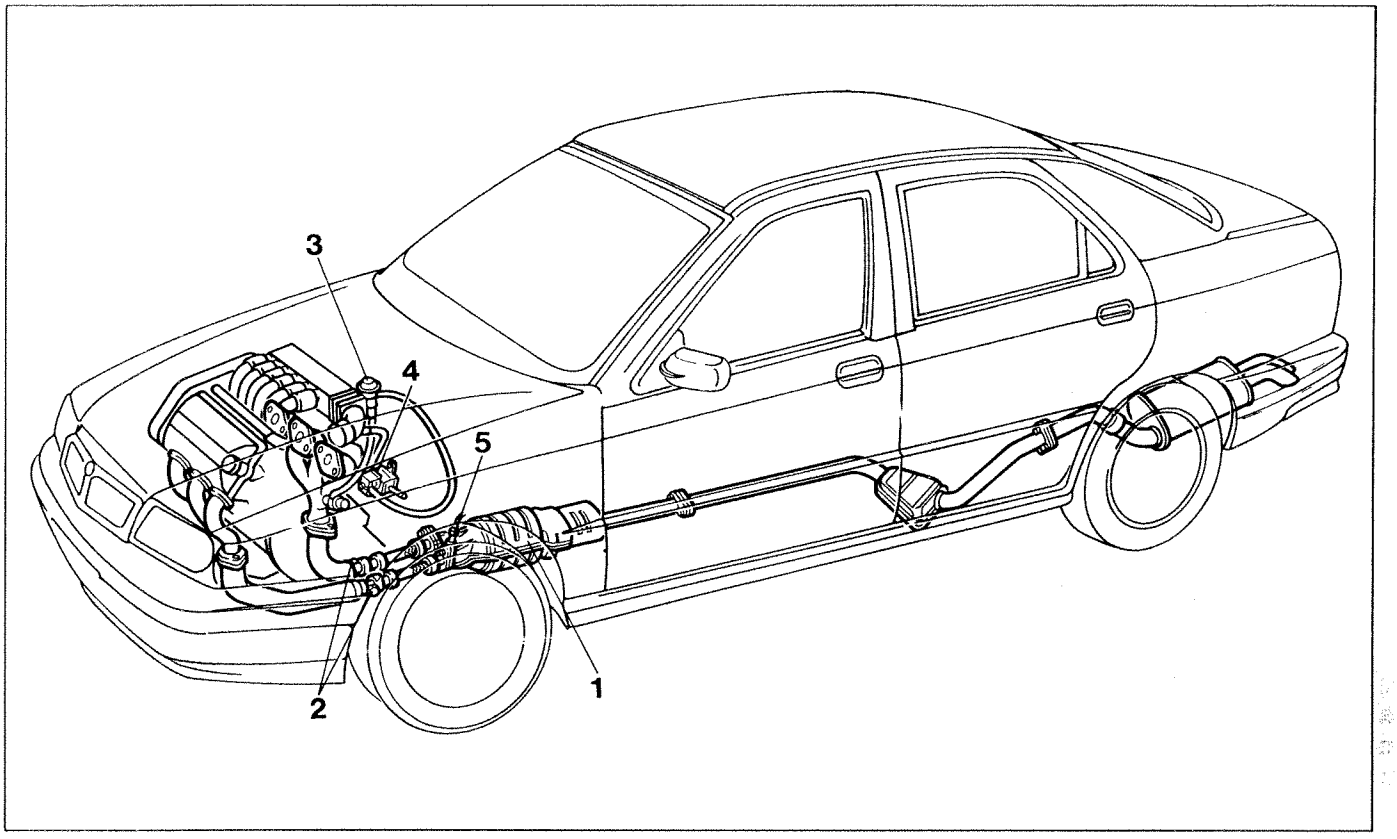

P3U22BX01

The self-adaptive Motronic system ensures continual control of idle speed and CO level. External regulation is therefore no longer required (no adjustment screws are provided).

A check on emissions upstream of downstream of catalytic converter (1) can nevertheless provide valuable information on injection-ignition system operating conditions as well as engine and catalytic converter parameters.
The figure shows plugs (2) located on the exhaust system for fitting exhaust gas tester probe.

Because two plugs are fitted, one for each exhaust manifold, the test range can be limited to only one cylinder block in the case of abnormal readings due to faults in the power unit.
The system consists of the following parts:

1. Catalytic converter
2. Plugs for checking CO upstream of catalytic converter
3. Pneumatic E.G.R. valve.
4. Modulator solenoid for Pierburg EGR valve
5. Lambda probe

Copyright Fiat Auto

Pierburg EGR valve

This valve is controlled by the intake manifold vacuum.
The E.G.R. valve is governed as follows:
- if a signal from the electronic control module causes the solenoid to create a vacuum in duct (1), diaphragm (2) rises and connected plunger (3) increases gas passage cross section according to vacuum level in duct (1). An appropriate quantity burnt gas can therefore be recirculated to the intake manifold;

- if not excited, the solenoid brings duct (1) into contact with the atmosphere to bring about closure of plunger (3). This prevents recirculation of burnt cases when not required.

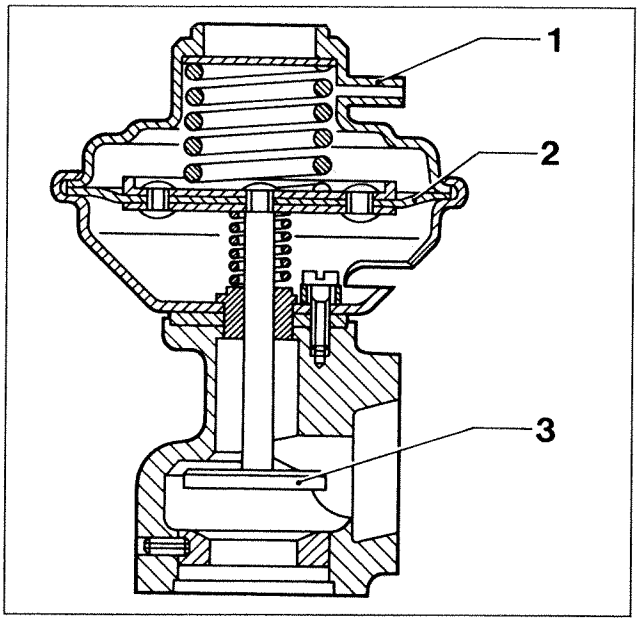

P3U23BX01

Cross section through E.G.R. valve.

1. Vacuum duct
2. Diaphragm
3. Plunger

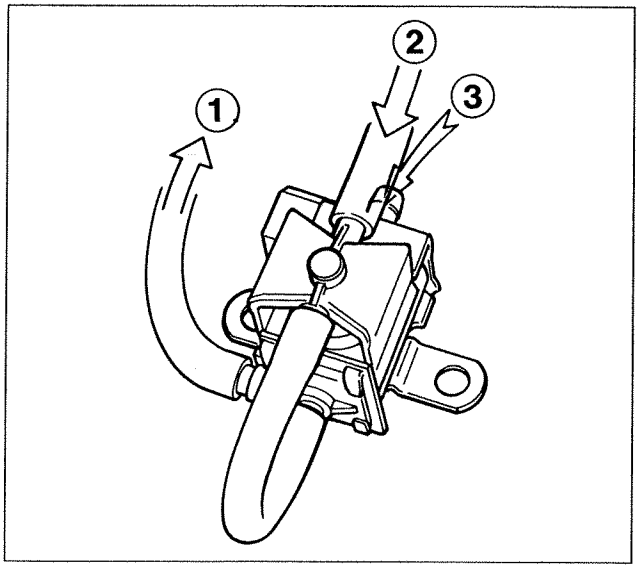

P3U23BX02

Modulator solenoid for Pierburg EGR valve

The modulator solenoid controls the pneumatic E.G.R. valve.
Two connections of this 5-way ECU-controlled valve are connected together and the other three are used to cut out vacuum to activate the E.G.R. system
When the valve is excited, vacuum enters intake (1) and is directed to the E.G.R. pneumatic valve through outlet (2). When the valve is not excited, intake (3) is connected to atmospheric pressure and outlet (2) is connected to the E.G.R.

FUEL EVAPORATION CONTROL AND VAPOUR RECOVERY SYSTEM

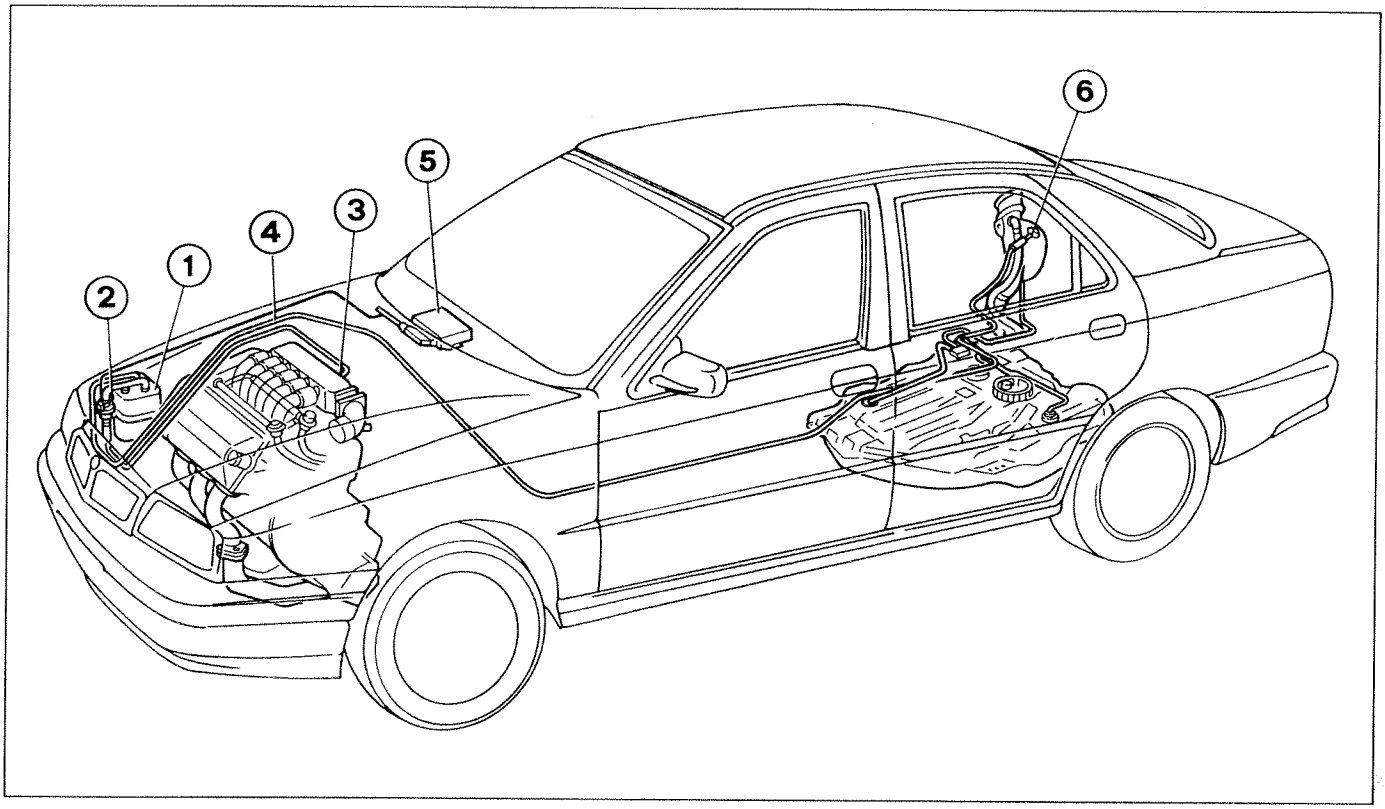

P3U24BX01

The fuel vapour intake system is made up of the following components:

1. Active carbon trap filter
2. Solenoid directing vapour to the manifold
3. Vapour intake on manifold
4. Vapour intake pipe from tank
5. Electronic control unit
6. Multifunction valve

Copyright Fiat Auto

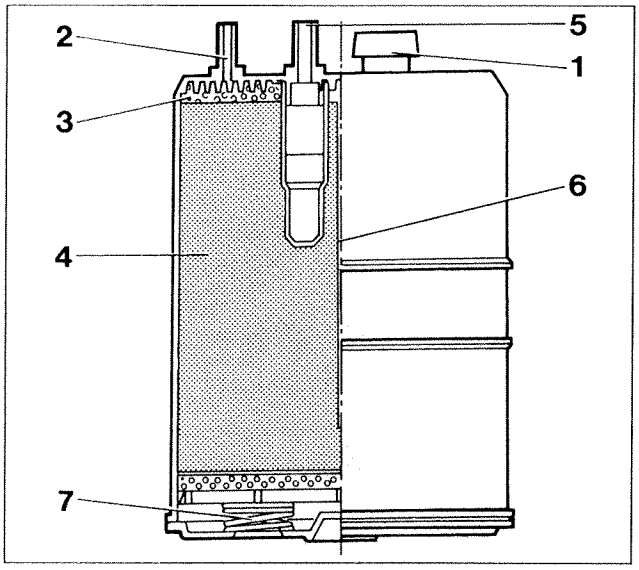

P3U31CX02

Active carbon trap filter
This consists of carbon granules (4) that trap fuel vapour entering intake (5).

Flushing air enters intake (1), through paper filter (3) and flows over the carbon granules to remove fuel vapours and carry them toward the outlet (2) and then on toward the cut-off valve.

Air entering through intake (5) may also be pulled back by a vacuum in the tank, when it serves to ventilate the tank.
Partition (6) ensures that the flushing air flows over all the carbon granules and promotes the release of fuel vapour toward the inlet manifold.
Two springs (7) allow the mass of granules to expand when the pressure increases.

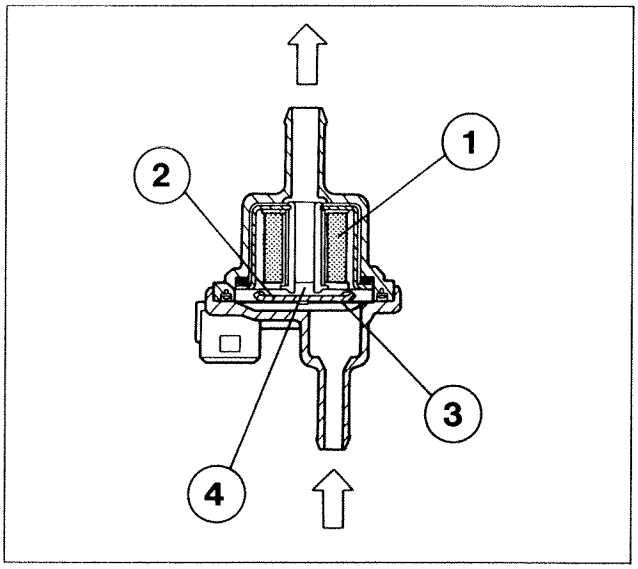

P3U25BX01

Bosch vapour control solenoid

When the key is turned to MARCIA the solenoid, normally open, is activated and closes to enable operation.
Solenoid (1), when excited, attracts plunger (2) that overcomes the load of disc spring (3) to close orifice (4) and prevent fuel vapour passing through
Solenoid is adjusted so that the arrow on the case is turned toward the inlet manifold.

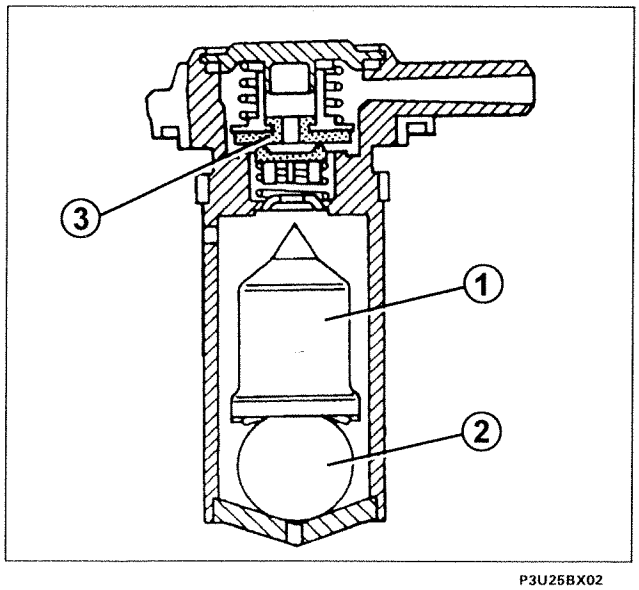

P3U25BX02

Multifunction valve

This valve performs the following functions:

- prevents fuel flowing out in case the vehicle overturns in an accident;

- vents fuel vapours from tank to the active carbon trap filter;
- ventilates the tank if a vacuum builds up inside.

This valve consists of: a float (1); a heavy ball (2) and a two-way valve (3) that allows fuel vapour to flow in both directions when the pressure difference between one side of the valve and the other exceeds a set limit.

CHECKS, ADJUSTMENTS AND REPAIRS TO MOTRONIC M 3.7 INJECTION-IGNITION SYSTEM ADDITIONAL TO FAULT DIAGNOSIS WITH FIAT/LANCIA TESTER



OBSERVE THE FOLLOWING PRECAUTIONS WHEN WORKING ON VEHICLES WITH MOTRONIC INJECTION-IGNITION SYSTEMS:

- *never start the engine when the electrical terminals are poorly connected or loose on the battery poles;*
- *never use a quick battery charger to start the engine;*
- *never disconnect the battery from the car circuit with the engine running;*
- *when charging the battery quickly, first disconnect the battery from the vehicle circuit;*
- *if the vehicle is placed in a drying oven after painting at a temperature of more than 80° C, first remove the injection/ignition ECU;*
- *never connect or disconnect the ECU multiple connector with the ignition key in MARCIA position;*
- *always disconnect battery negative lead before carrying out electrical welding on vehicle.*

Note that this system has a stand-by memory containing all learnt self-adaptive parameters. Because all this data is lost when the battery is disconnected, this operation should be carried out as little as possible.

REMOVING-REFITTING SYSTEM COMPONENTS

For removing-refitting procedures for the following components:
- fuel filter;
- electric fuel pump;
- active carbon trap filter and petrol vapour cut-off solenoid;
- electronic control unit

and for the polluting emission level checking procedure, refer to the "Fuel system" section for the 1998 engine version.

Copyright Fiat Auto

BOSCH MOTRONIC M 3.7 MPI INTEGRATED INJECTION-IGNITION SYSTEM (1996 range)

Introduction

The injection/ignition system fitted to the Lancia k 2959 V6 24v 1996 range vehicle, differs from the previous version because it lacks a fuel pressure damper and certain components are located in different positions. This section discusses only specific differences on the 1996 range.

System components

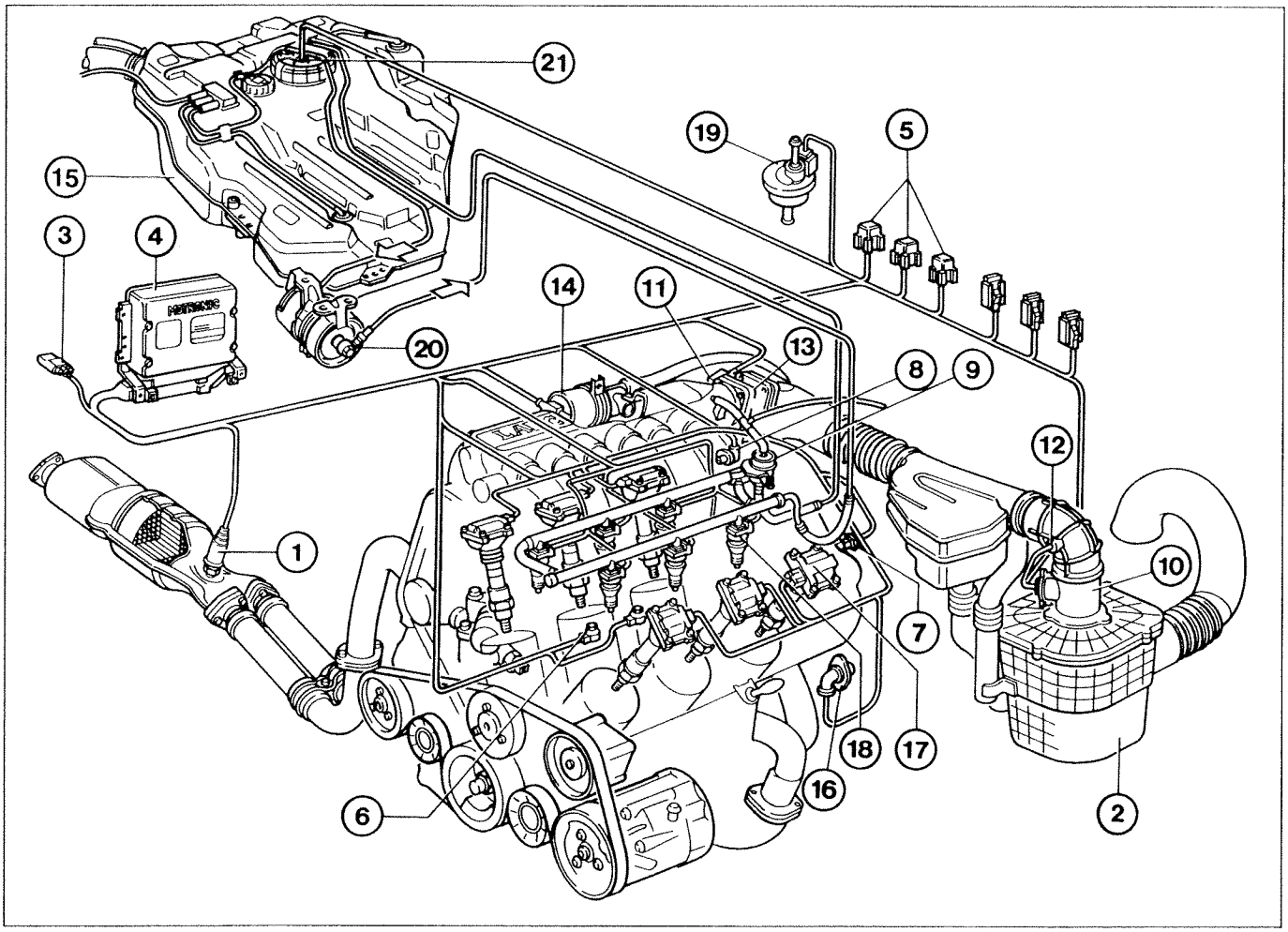

P3U26BX01

1. Lambda probe
2. Air cleaner
3. Tester socket
4. Control unit
5. Relay unit
6. Knock sensor
7. Engine coolant temperature sensor
8. Cam angle sensor
9. Fuel pressure regulator
10. Air flow meter
11. Throttle potentiometer
12. Intake air temperature sensor
13. Throttle case
14. Constant idle actuator
15. Fuel tank
16. Rpm sensor
17. Ignition coils
18. Injectors
19. Evaporation solenoid
20. Fuel filter
21. Electric fuel pump

FUEL SUPPLY CIRCUIT

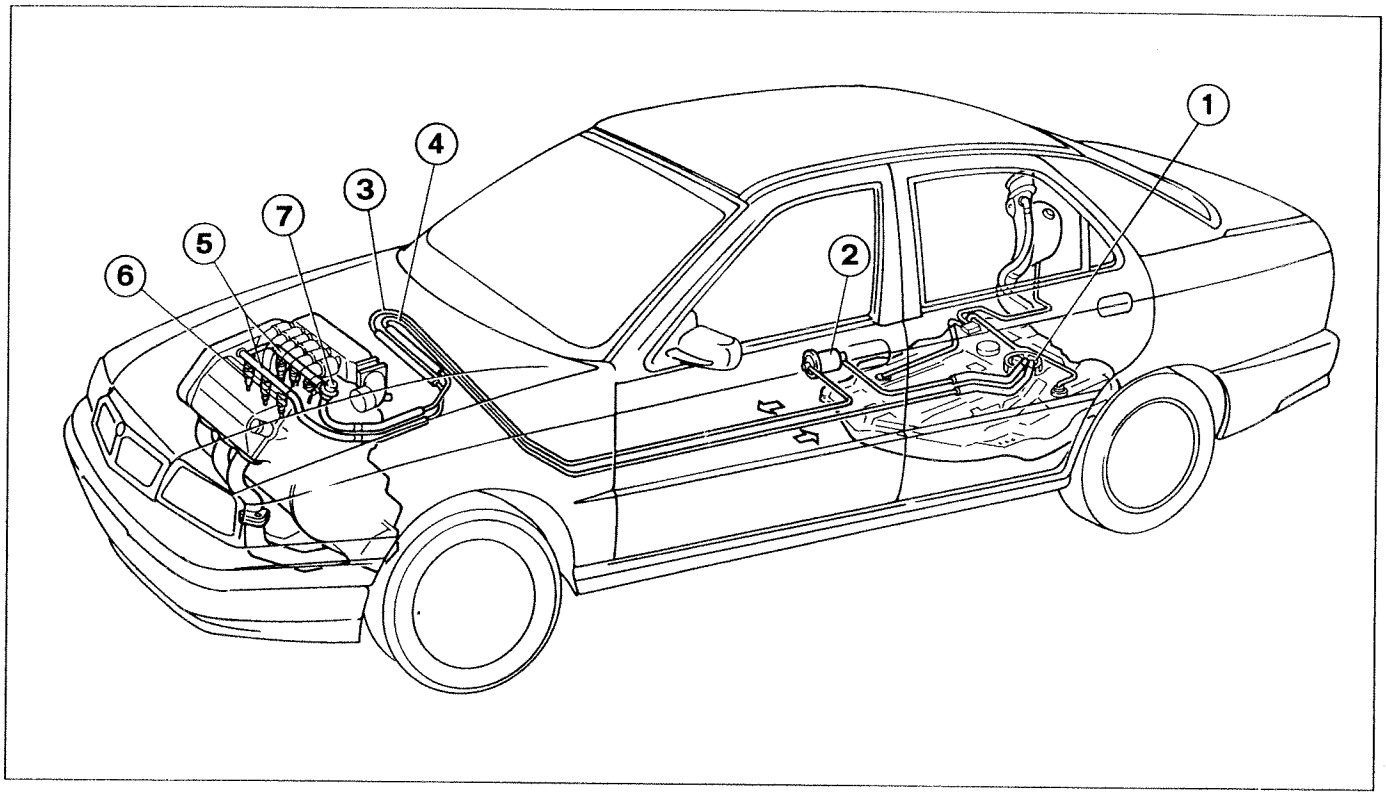

P3U27BX01

1. Submerged fuel pump
2. Fuel filter
3. Outlet line
4. Return line
5. Fuel manifolds
6. Injectors
7. Pressure regulator

Fuel is supplied to the system by a pump submerged in the tank. This takes up fuel and directs it to the filter and then on to the electrodes.

Fuel delivery pressure to the injectors is maintained at a constant pressure proportional to the pressure in the inlet manifold by the pressure regulator. This acts on the fuel flow rate in order to maintain a constant pressure difference between pump and injectors.

Excess unpressurised fuel is allowed to flow back from the pressure regulator into the tank.

INERTIA SAFETY SWITCH

To increase the level of safety for car occupants in case of impact, the vehicle is equipped with an inertia switch located inside the passenger compartment beneath the driver's seat.
This sensor reduces the possibility of fire (due to fuel flowing out of the injection system) by de-activating the pump supplying the injection circuit.
For a full description of the inertia switch, refer to the Fuel System section of version 1998 20V.

Even if the impact is only apparently slight, do not re-activate the switch if a smell of fuel or leaks from the fuel system are noted, but search for the fault and repair it to avoid the risk of fire.

Copyright Fiat Auto

LOCATION OF COMPONENTS IN ENGINE BAY

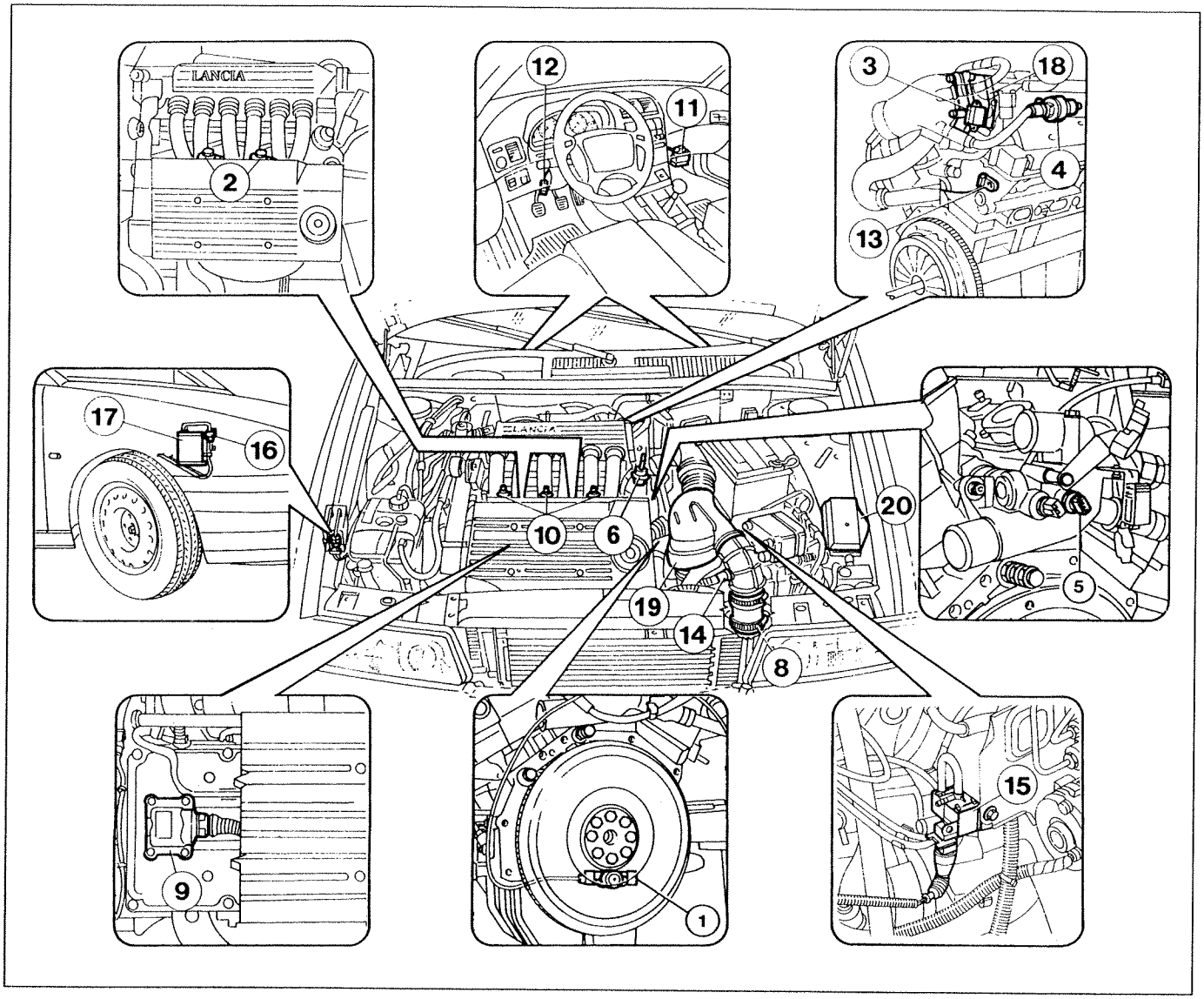

P3U16BX02

1. Rpm and TDC sensor
2. Knock sensors
3. Throttle position sensor
4. Idle speed adjustment actuator
5. Coolant temperature sensor
6. Fuel pressure regulator
8. Air flow meter (debimeter)
9. Ignition coil (one for each cylinder)
10. Injectors
11. Electronic injection-ignition control unit
12. Diagnostic socket
13. Timing sensor
14. Intake air temperature sensor
15. E.G.R. solenoid.
16. Canister solenoid
17. Active carbon trap filter
18. Throttle case
19. Resonator
20. Relay carrier case

DIAGRAM OF INPUT AND OUTPUT BETWEEN ECU AND SYSTEM SENSORS AND ACTUATORS

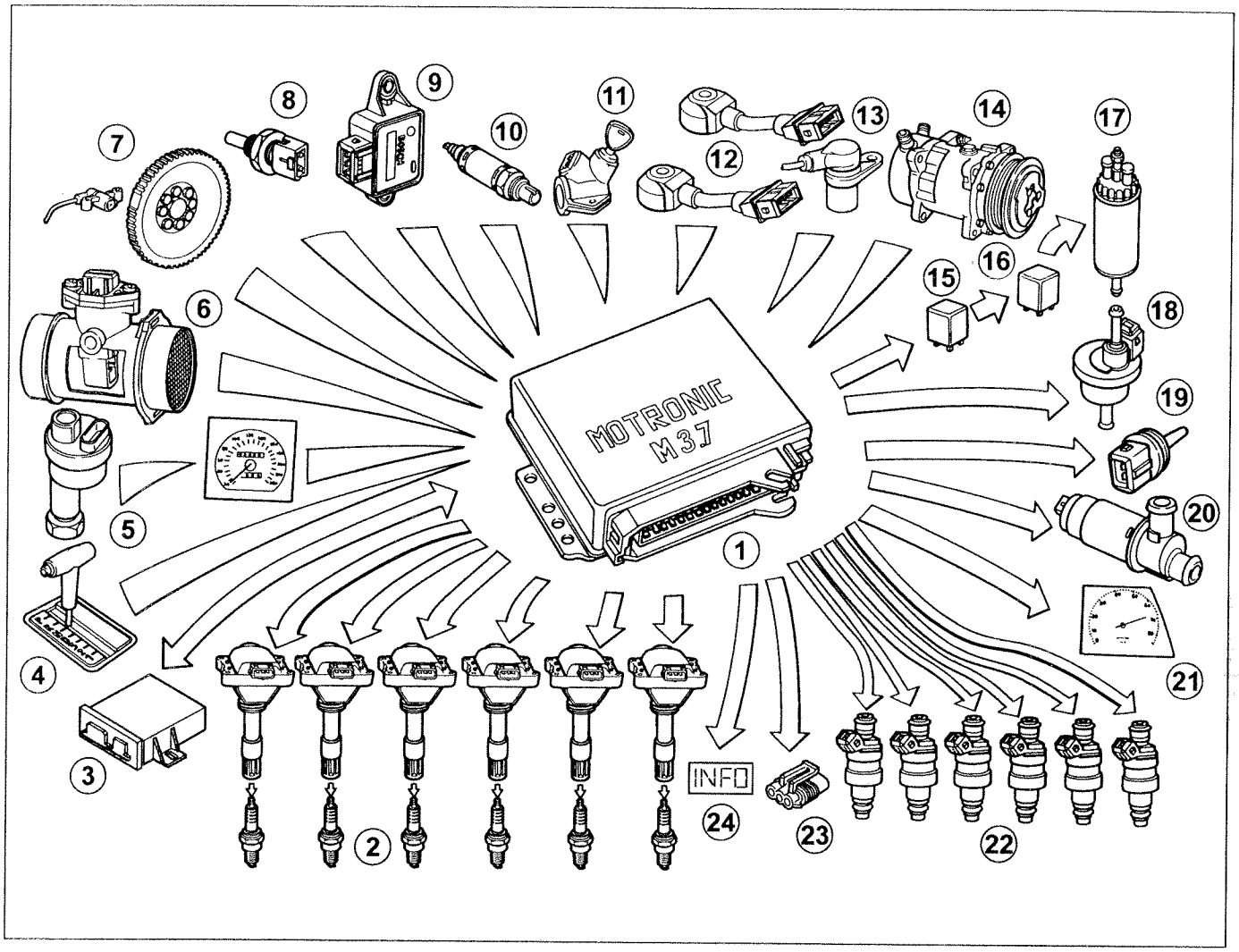

P3U29BX01

System components:

1. Electronic control unit
2. Ignition coils
3. Lancia CODE
4. Automatic transmission
5. Speedometer sensor
6. Debimeter
7. Rpm sensor
8. Water temperature sensor
9. Throttle potentiometer
10. Lambda probe
11. Ignition switch
12. Knock sensors
13. Cam angle sensor
14. Air conditioner compressor
15. System relay
16. Pump relay
17. Fuel pump
18. Fuel vapour uptake solenoid
19. Air temperature sensor
20. Idle actuator
21. Rev counter signal
22. Injectors
23. Tester socket
24. Infocenter

Copyright Fiat Auto

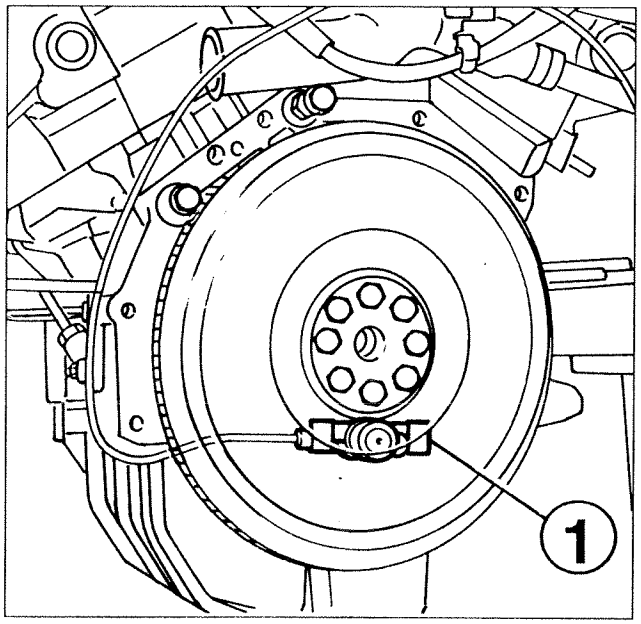

P3U30BX01

RPM and TDC sensor

The sensor used for measuring rpm and TDC (1) is inductive. In other words, it works by altering the magnetic field generated by teeth passing in front of a toothed pulley (phonic wheel) fitted to the crankshaft.
The teeth passing in front of the sensor alter the gap between pulley and sensor. The dispersed flow thus alters to set up an alternating voltage with amplitude dependent on rpm.
The phonic wheel consists of 58 teeth plus a gap equivalent to two missing teeth.

This reference gap is used as a base for measuring synchronism point (TDC).
The control unit uses this signal to calculate the ignition advance angles.

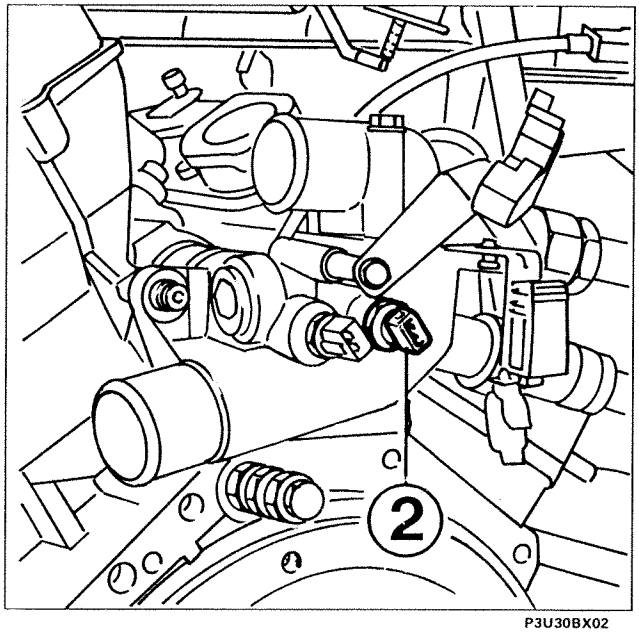

P3U30BX02

Coolant temperature sensor

The sensor is fitted with its sensitive part in contact with the coolant. The voltage it supplies to the ECU varies according to engine temperature in order to correct air flow meter data. According to the signal received from the sensor, the ECU can therefore increase fuel injection time to provide the necessary enrichment and make up for fuel loss due to condensation of fuel particles on intake ducts when the engine is not running at service temperature.

This sensor therefore safeguards engine operation during the stage subsequent to start-up by adding a further period of enrichment with intensity and duration dependent on coolant temperature. It also permits efficient engine operation during acceleration with engine cold.

page

ENGINE

- Removing-refitting power unit 1
- Removing-refitting power unit without the aid of trolley 186082300 11

REPLACING AUXILIARY BELT

- Removing-refitting auxiliary component belt 12

REPLACING TIMING BELT

- Removing-refitting timing belt 14
- Refitting timing belt and adjusting tension 18
- Checking ignition advance 19

REMOVING-REFITTING INJECTION PUMP

- Removing injection pump 20
- Refitting injection pump (with key) and timing adjustment 21
- Refitting injection pump (without key) and timing adjustment 22

COOLING SYSTEM

- Procedure for draining/filling cooling circuit 24

Copyright Fiat Auto

REMOVING-REFITING POWER UNIT

1

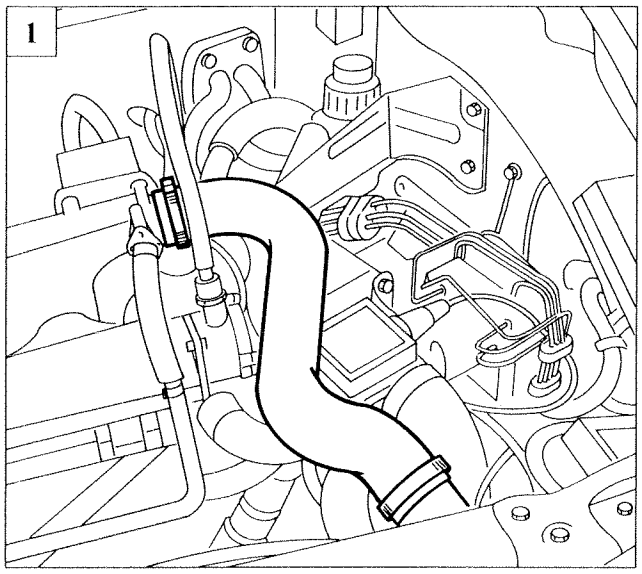

P3U01AJ01

2

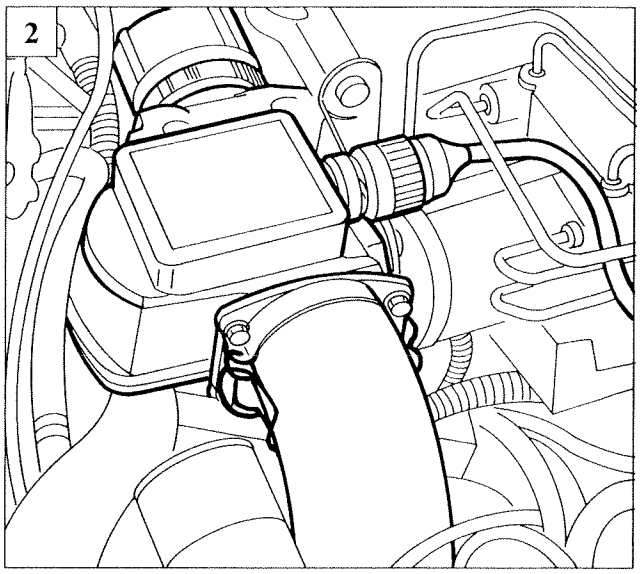

P3U01AJ02

3

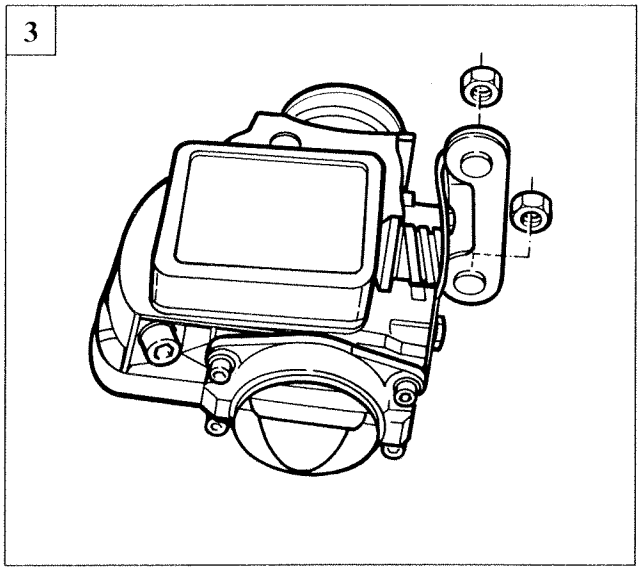

P3U01AJ03

Working from inside the vehicle, remove the steering box pinion from the steering column as described in "Section 41" of this manual; then position the vehicle on a lift, disconnect the battery negative lead and proceed as follows.

Drain the power steering fluid

1. Disconnect the air inlet duct from the intercooler inlet manifold.

2.3 Disconnect the electrical connection and air ducts, then disconnect the air flow meter together with bracket by unscrewing the bolts shown in the figure (3).

4.5 Disconnect the air duct from air flow meter to turbocharger by disconnecting the sleeve from the point shown in figure (5).

4

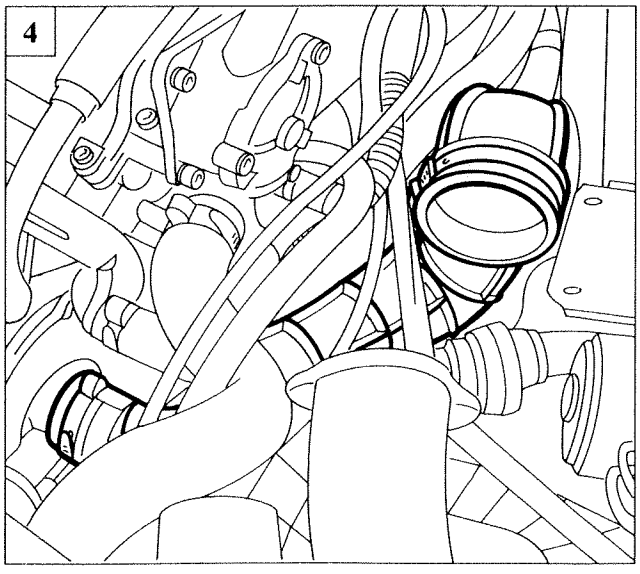

P3U01AJ04

5

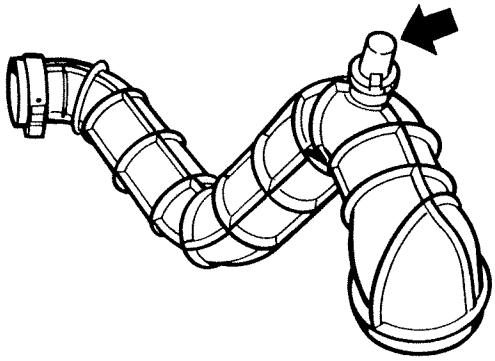

P3U01AJ05

Copyright Fiat Auto

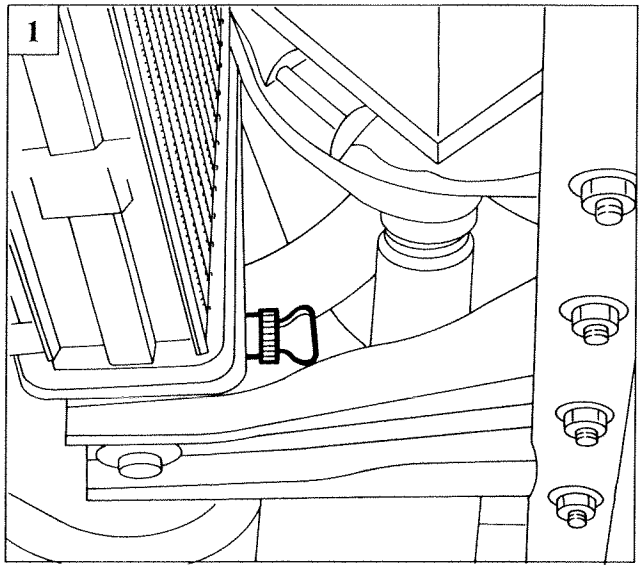

P3U02AJ01

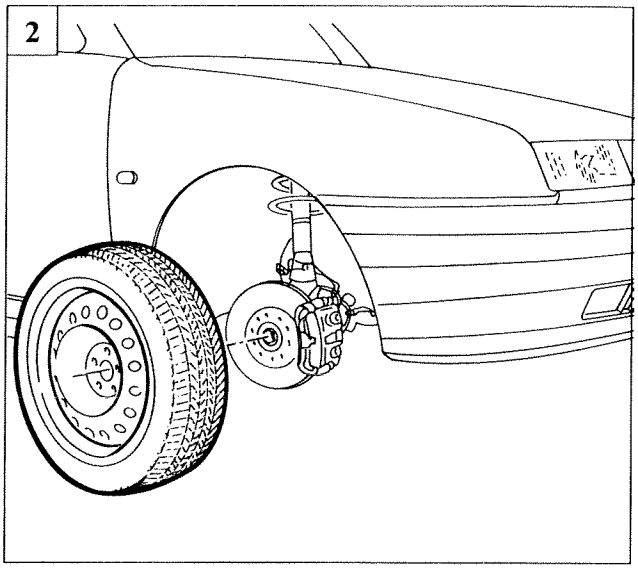

P3U09CJ01

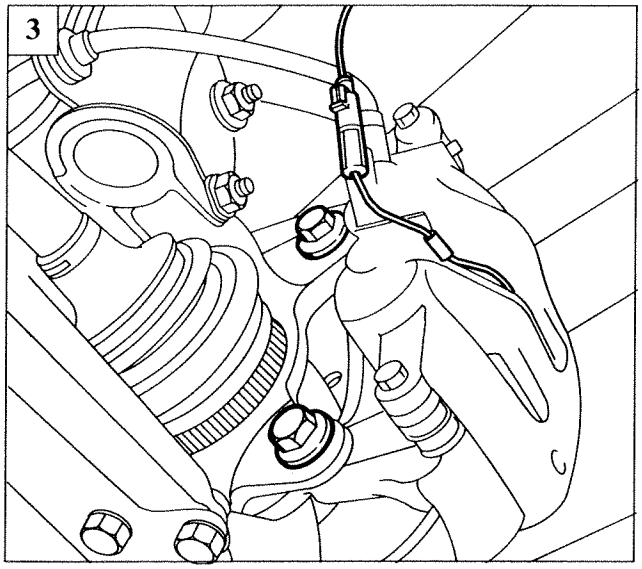

P3U01CJ03

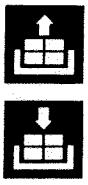

1. Drain the engine coolant by undoing the cock on the radiator.

2. Remove the front wheels.

3. Disconnect the electrical connection of the brake lining wear sensor, unscrew the bolts that fasten the brake calipers without removing the brake line, then place to one side.
4. Disconnect the pillar from the front damper and then remove the rpm sensor from the pillar.

5. Disconnect the lower engine bay protection.

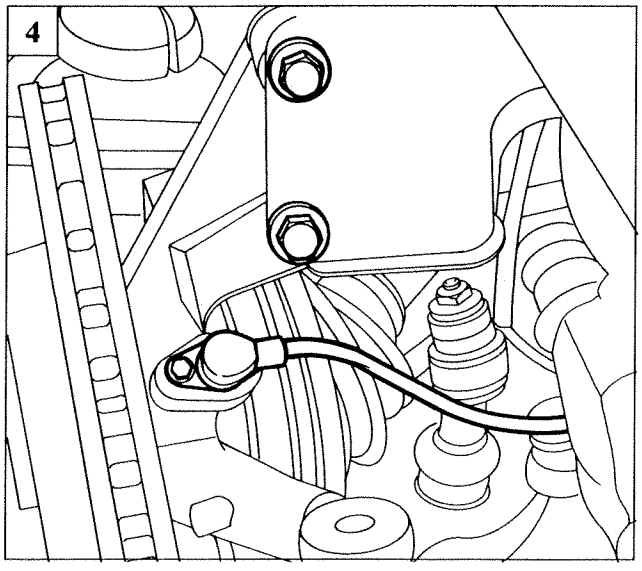

P3U01CJ04

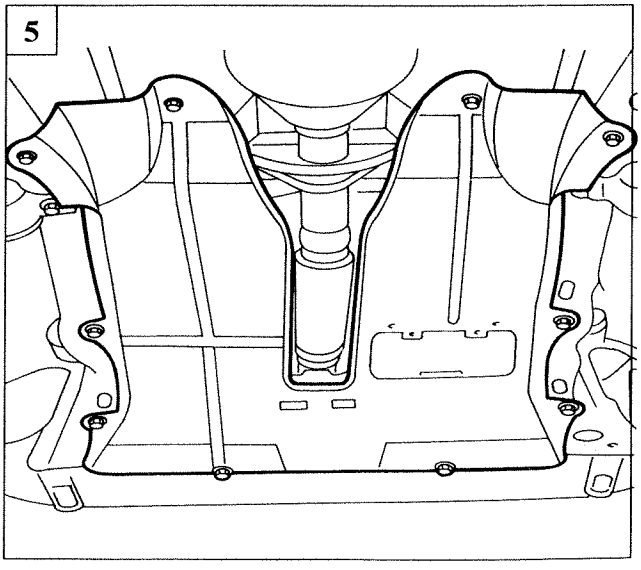

P3U02CJ01

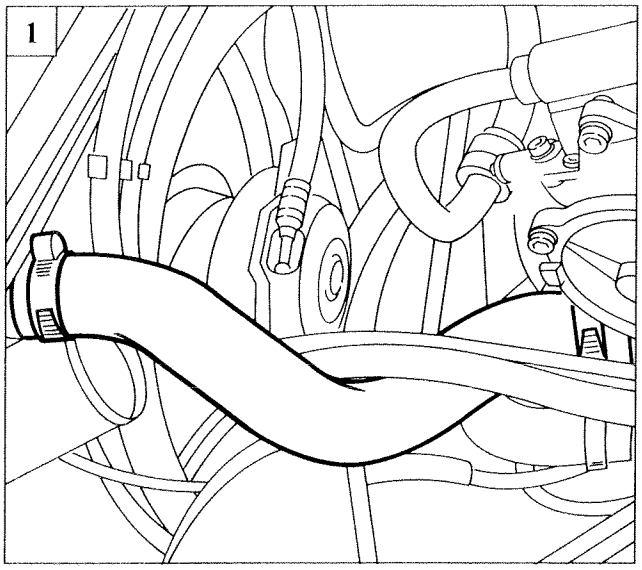

P3U03AJ01

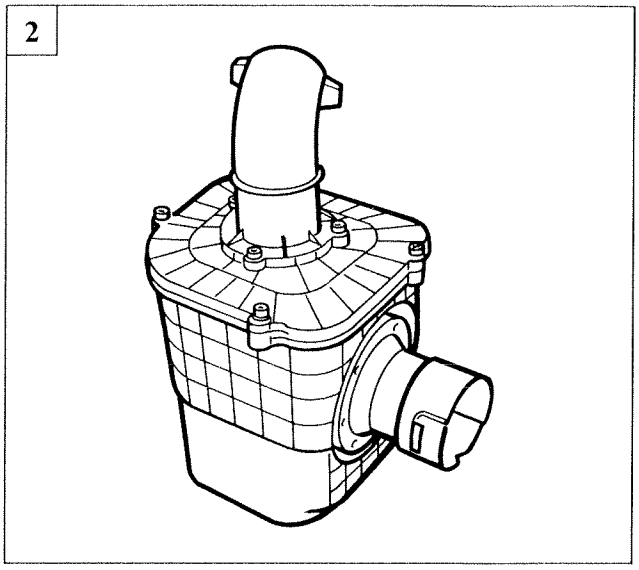

P3U03AJ02

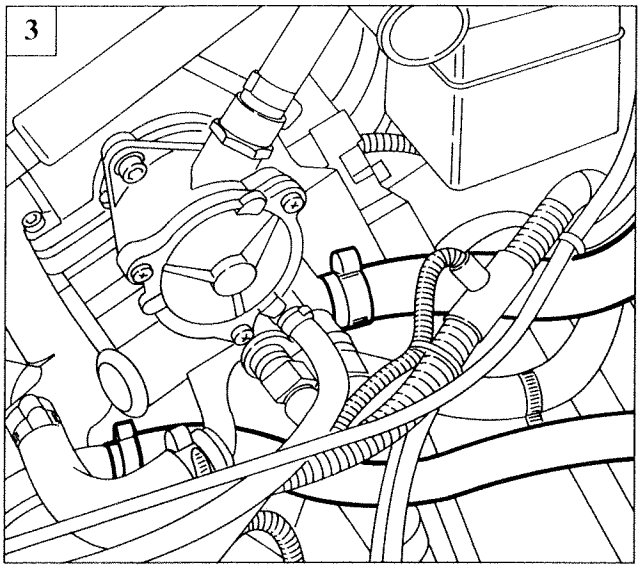

P3U03AJ03

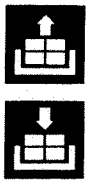

1.2 Disconnect the coolant sleeve from the radiator thermostat and take out the air cleaner assembly (2).

3. Disconnect the lines carrying coolant to and from the passenger compartment heater from the thermostat.

4. Disconnect the coolant line from thermostat to expansion tank.

5. Disconnect the EGR valve lines from the exhaust manifold and brake servo vacuum point.

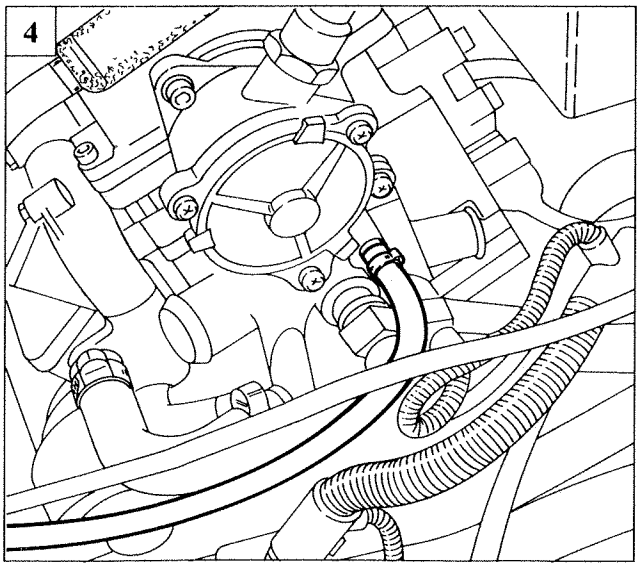

P3U03AJ04

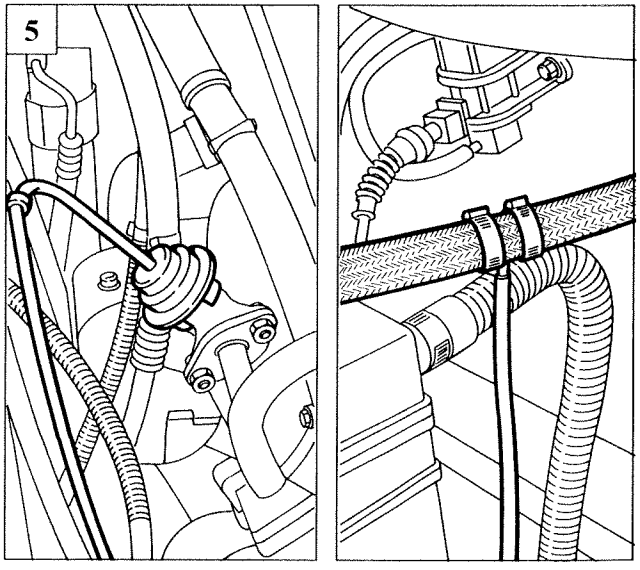

P3U03AJ05

Copyright Fiat Auto

1

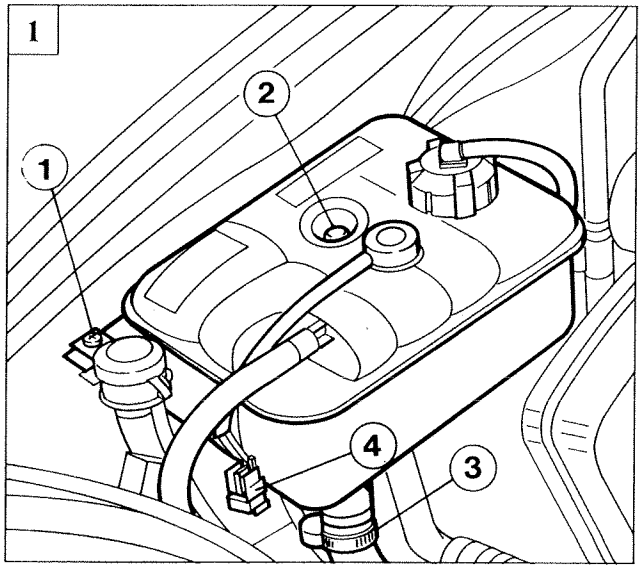

P3U04AJ01

2

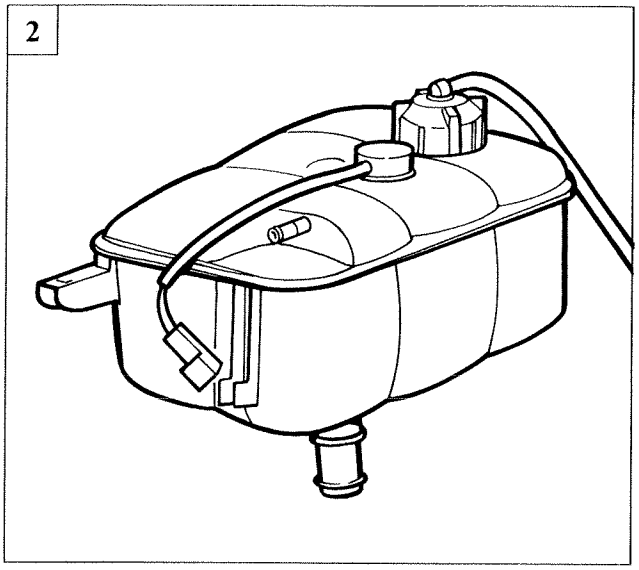

P3U04AJ02

3

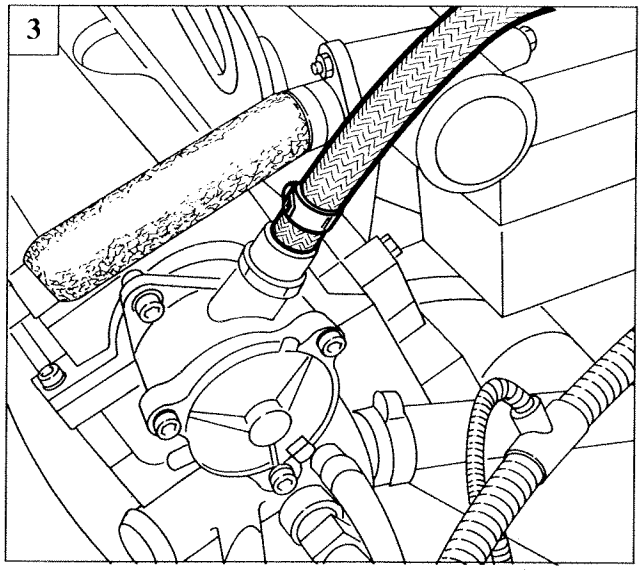

P3U04AJ03

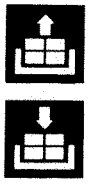

1.2 Disconnect electrical connection (4), lower line (3) and mount for washer fluid top-up line (1), then remove the expansion tank by unscrewing central retaining screw (2).

3. Disconnect the brake servo line from the vane vacuum pump

4. Disconnect fuel outlet and inlet lines.

5. Disconnect air duct from turbocharger to intercooler.

4

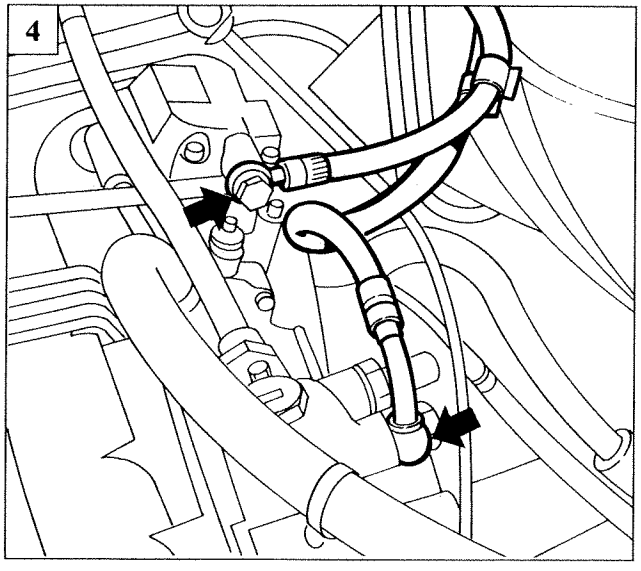

P3U04AJ04

5

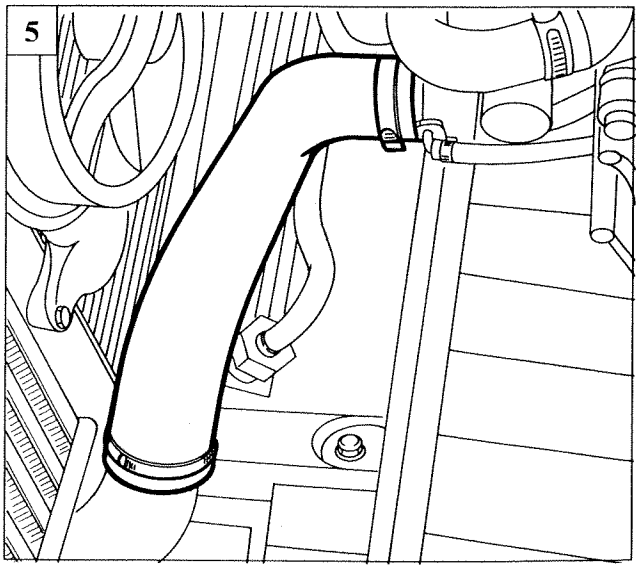

P3U04AJ05

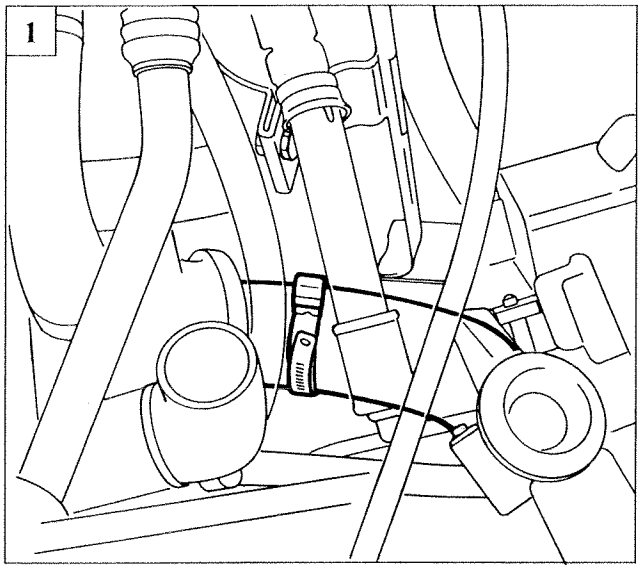

P3U05AJ01

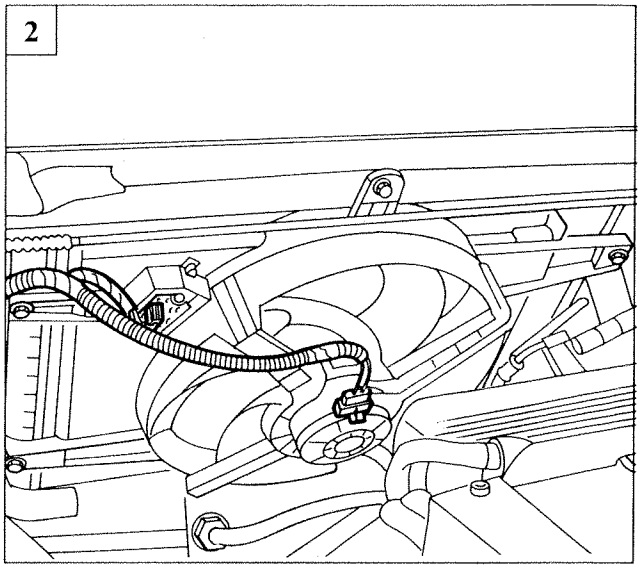

P3U04CJ01

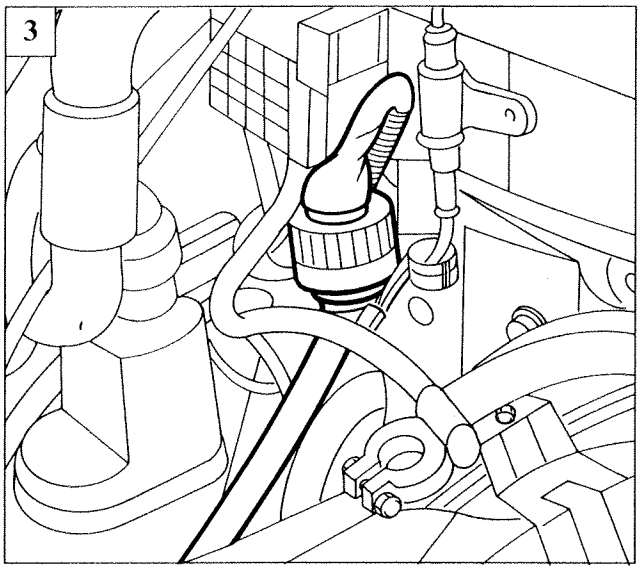

P3U05CJ01

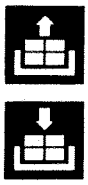

1. Disconnect coolant sleeve from engine.

2. Disconnect electrical connections from fan, then secure radiator-condenser unit to upper front beam.

3. Disconnect electrical connection connecting engine wiring to vehicle wiring.

4. Disconnect battery positive lead from connector block.

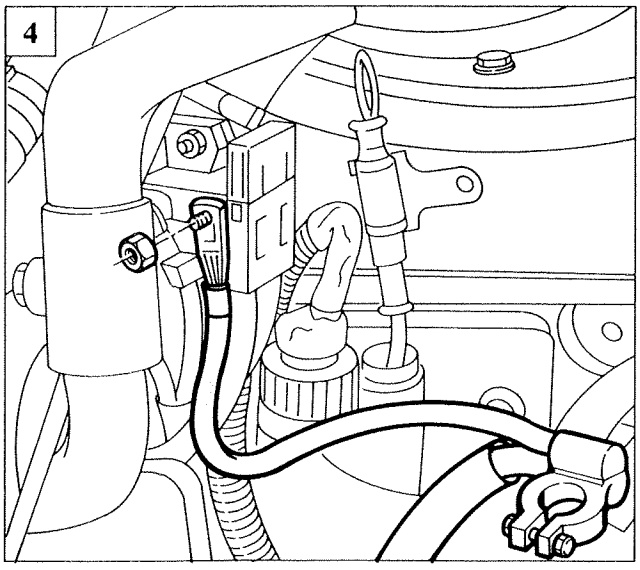

P3U05CJ02

Copyright Fiat Auto

10.

Disconnect connections shown in the figure.

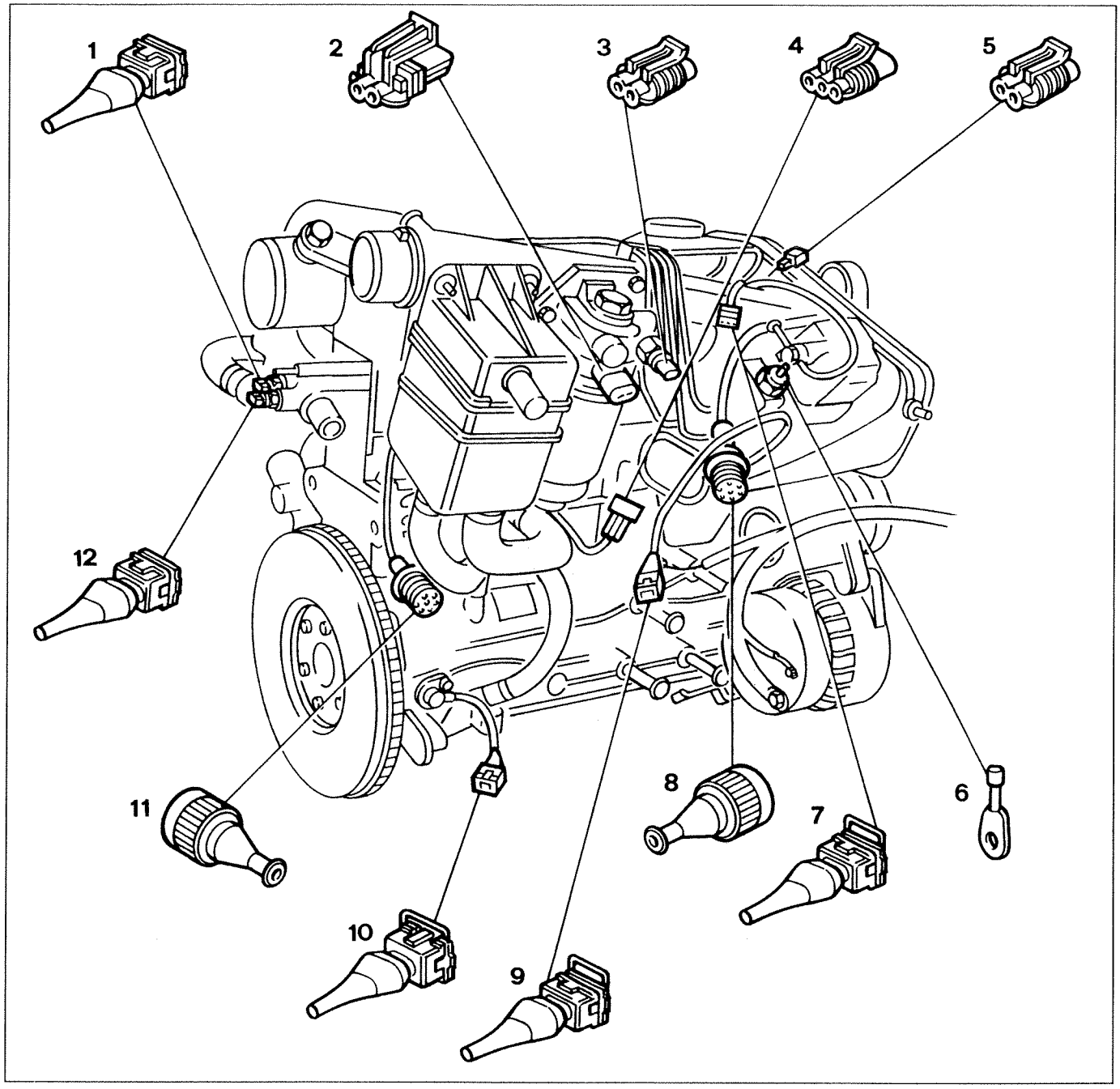

P3U06AJ01

1. Coolant temperature sensor connection (engine bay wiring)
2. Diesel filter connection (engine bay wiring)
3. Diesel filter connection (engine bay wiring)
4. Diesel filter connection (engine bay wiring)
5. Turbo pressure sensor connection (engine bay wiring)
6. Injection pump connection (injection wiring)
7. Controlled injector connection (injection wiring)
8. Injection pump connection (injection wiring)
9. Injection pump connection (injection wiring)
10. RPM and TDC sensor connection (injection wiring)
11. Glow plug connection (injection wiring)
12. Coolant temperature sensor connection (injection wiring)

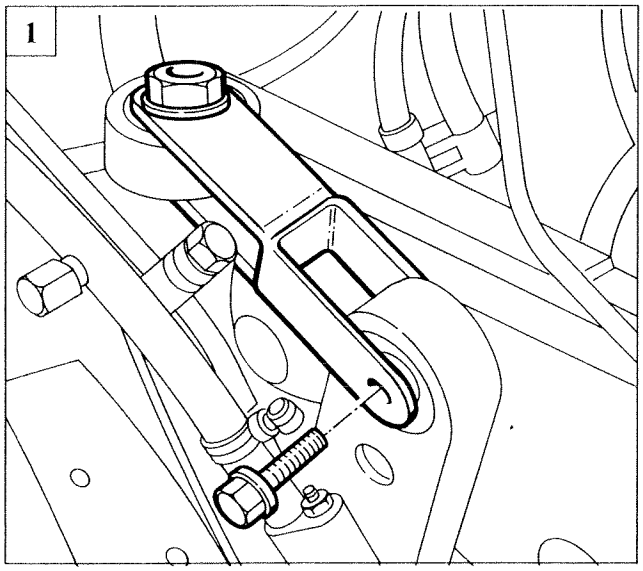

P3U06CJ03

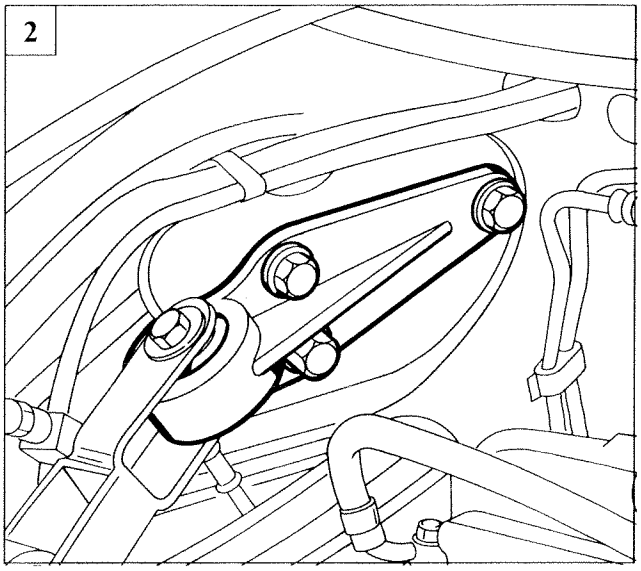

P3U06CJ04

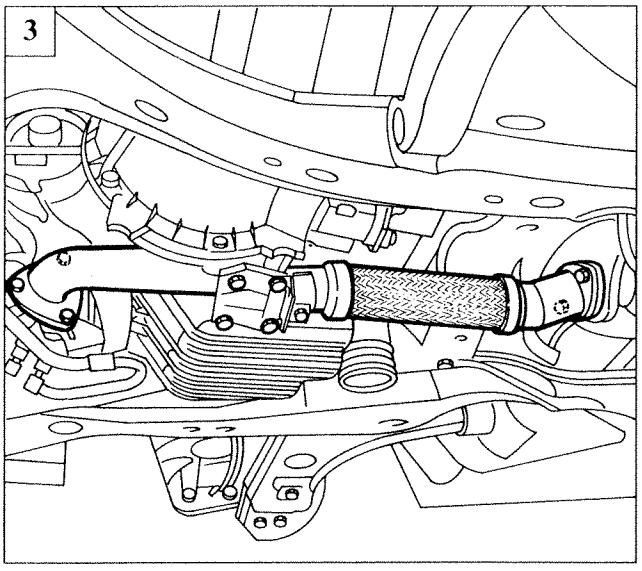

P3U07AJ01

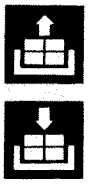

1. Release the reaction rod by removing the bolt indicated.
2. Disconnect the reaction rod retaining bracket from the body by taking out the retaining bolts.
3. Disconnect the first exhaust pipe section by undoing the elements shown in the figure.
4. Disconnect the clutch slave cylinder with bracket.
5. Disconnect the electrical connection from the reversing light switch and the reverse engagement inhibition cable.

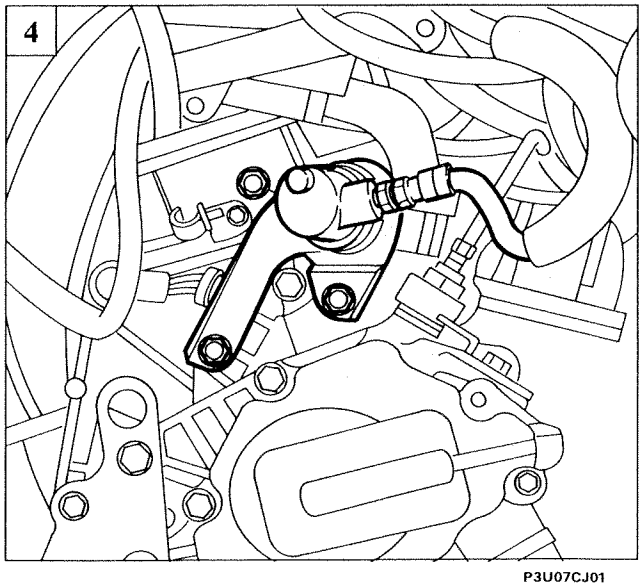

P3U07CJ01

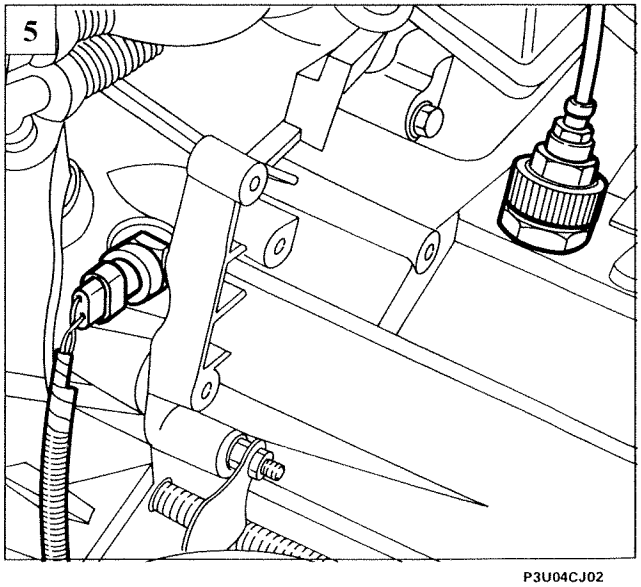

P3U04CJ02

Copyright Fiat Auto

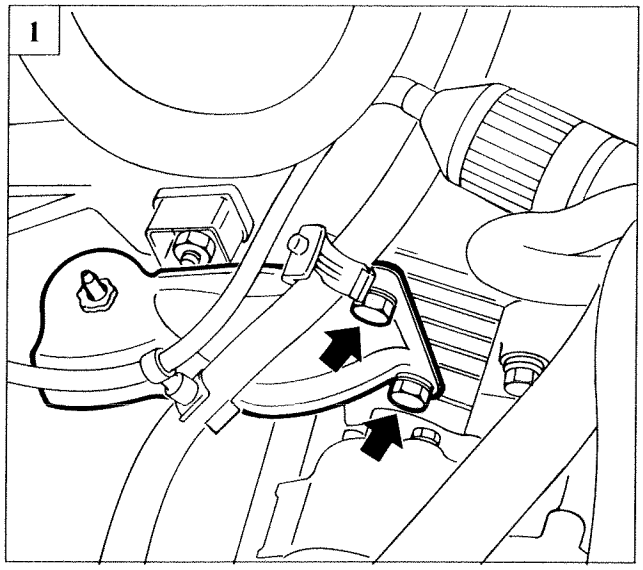

P3U07CJ02

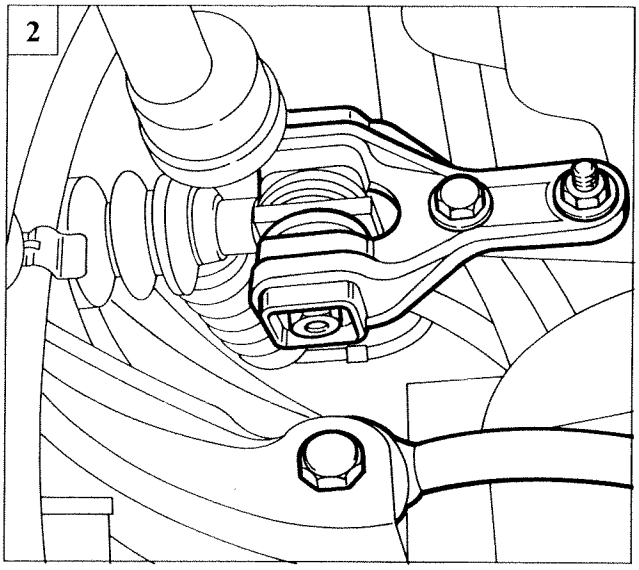

P3U07CJ03

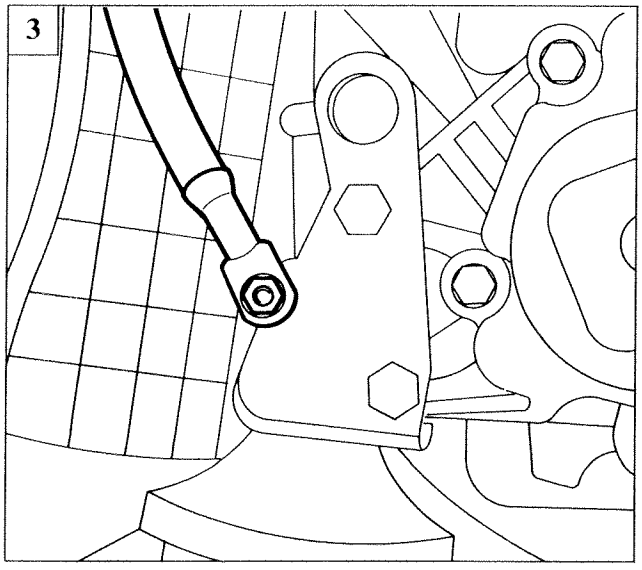

P3U06CJ05

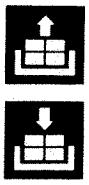

1. Disconnect the gearbox control levers and remove the reaction bracket from the gearbox.
2. Disconnect the speed engagement fork lever.
3. Disconnect the earth lead from the gearbox mount.
4. Disconnect the right hand plastic wheel arch lining.
5. Slacken auxiliary unit drive belt tension by adjusting automatic tensioner, then remove the belt.

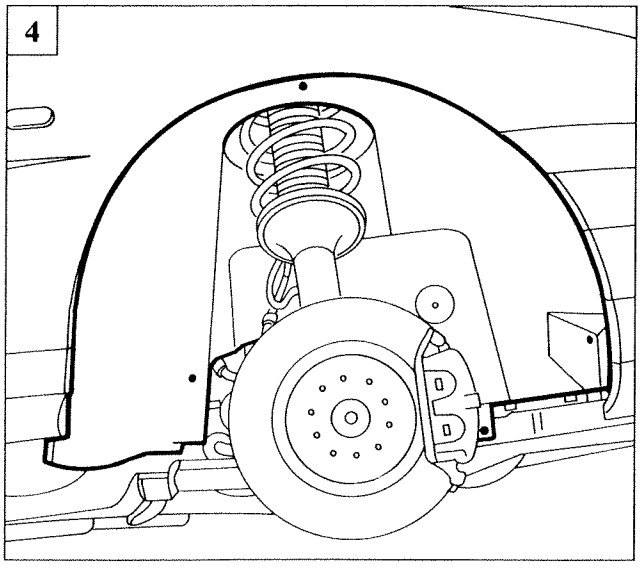

P3U09CJ02

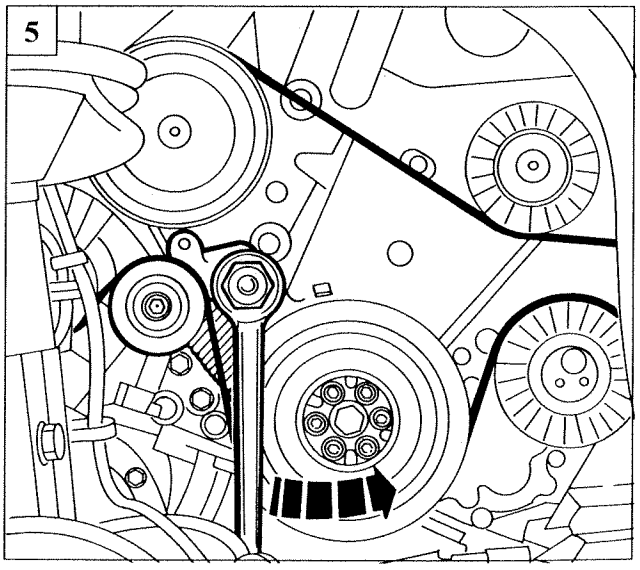

P3U08AJ01

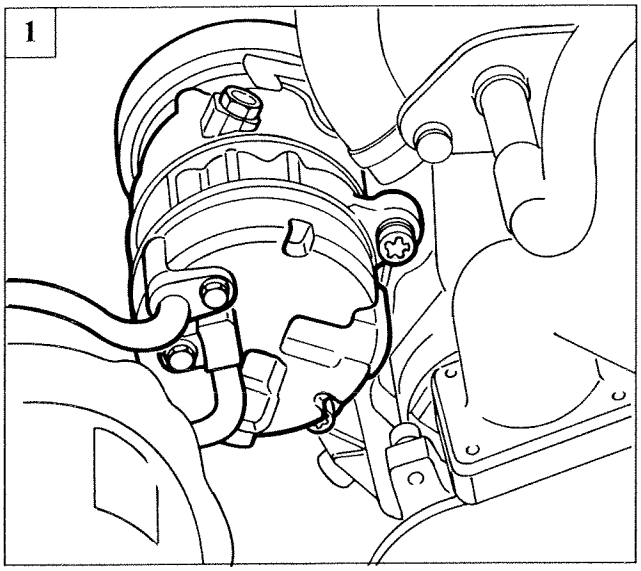

P3U09AJ01

1. Disconnect the air conditioner compressor from the engine by undoing the bolts shown in the figure, then place to one side.

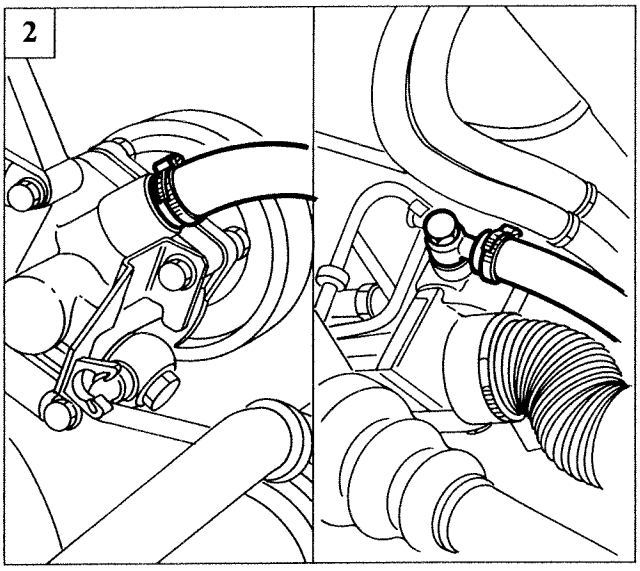

P3U09AJ02

2. Disconnect reservoir fluid inlet line from steering box and reservoir fluid oulet line from power steering pump.

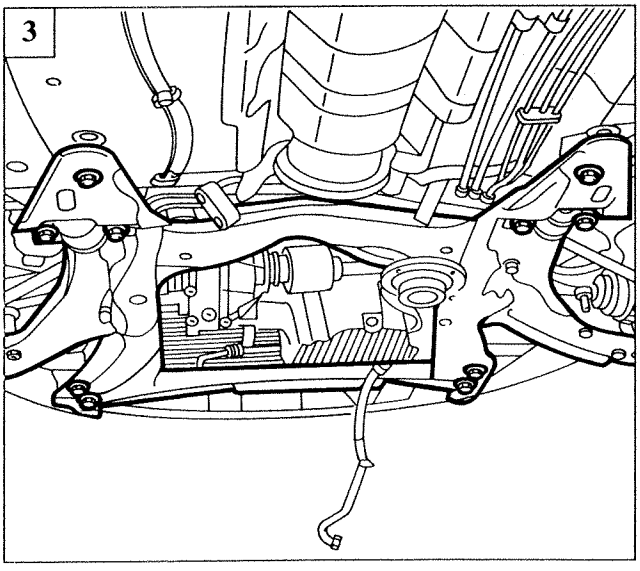

P3U07CJ04

3. Loosen bolts retaining frame to body.

Copyright Fiat Auto

10.

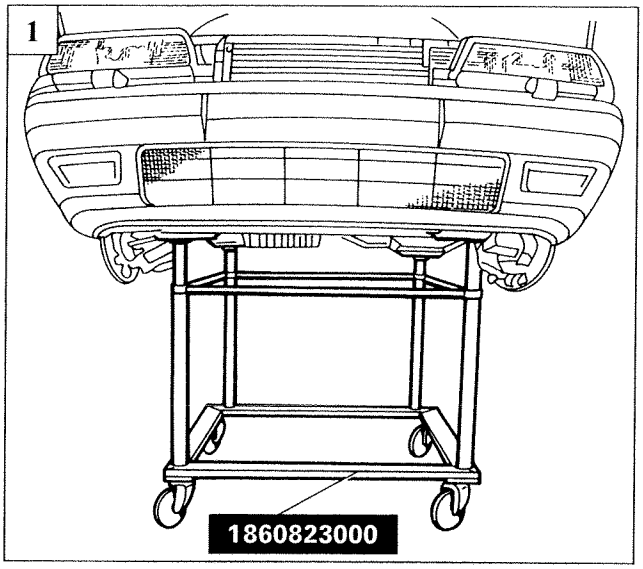

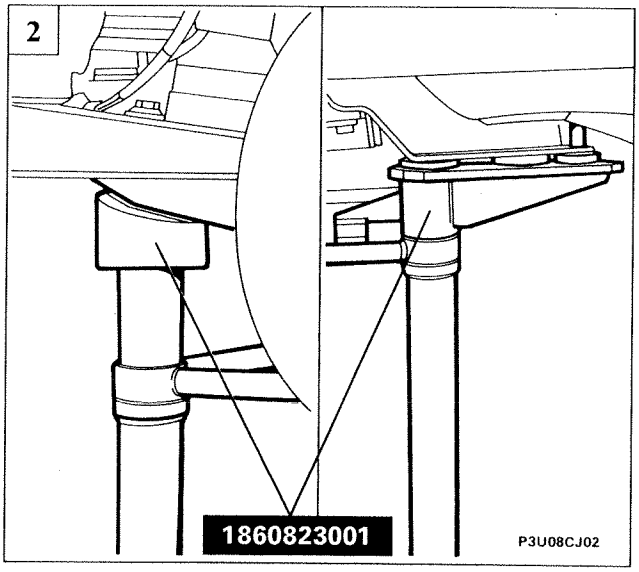

Front adaptor **Rear adaptor**

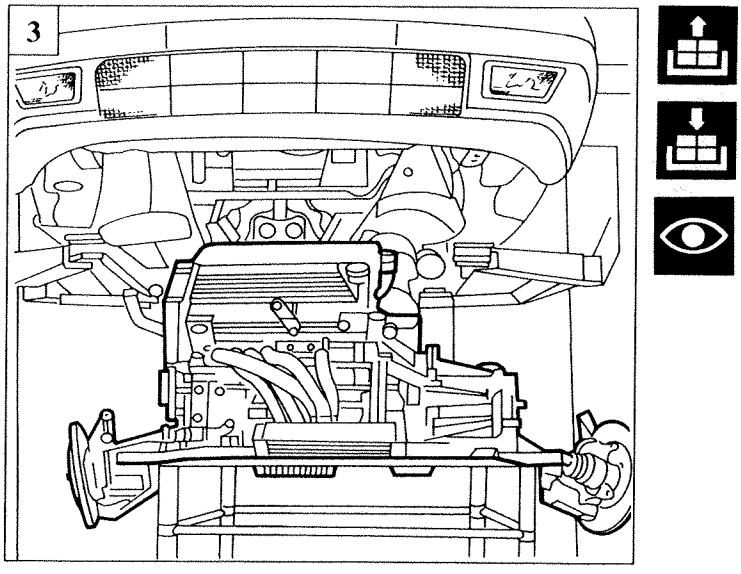

1-2. Remove rubber blocks from stand securing points on body; arrange power unit stand 1860823000 beneath the vehicle and lower lift so that frame rests on front adaptors. Centre and fasten onto rear adaptors (1860823001)

3. Unscrew previously loosened engine retaining bolts, then raise vehicle

NOTE *When refitting, reverse removal instructions. Note particularly when refitting coolant hoses, the groove in the hose must be aligned with the ridge on the rigid pipe to which it is fitted. Once refitting is complete, check frame bolts are tightened correctly and adjust toe-in. Top up levels of coolant and power steering fluid and also bleed the power steering system.*

REMOVING-REFITTING POWER UNIT WITHOUT THE AID OF TROLLEY 1860823000

Position the vehicle on a lift, disconnect the battery negative lead and proceed as follows:
- Use tool 1878077000 to undo the studs fastening the inner engine bay lining.
- Disconnect the washer fluid lines from the sprays, then disconnect the engine bay lid.
- Remove the battery.
- Remove the battery cradle.
- Disconnect the battery cradle rear bracket.
- Disconnect the air intake ducts.
- Disconnect the debimeter with bracket.
- Remove the ABS hydraulic control unit complete with bracket and position outside working area. Take care not to damage the pipes.
- Lift the vehicle and take off the front wheels.
- Drain the coolant.
- Remove the supplementary plastic wheel arch.
- Remove the lower engine bay protection.
- Remove the clutch slave cylinder complete with bracket fastening it to the gearbox.
- Disconnect the earth lead from the gearbox mount.
- Disconnect the left half axle coupling.
- Disconnect the first exhaust pipe section.
- Disconnect both gearbox control levers.
- Remove the gearbox reaction bracket.
- Disconnect delivery and return lines to the radiator from the engine.
- Disconnect intake and delivery lines from the power steering pump.
- Remove the auxiliary component drive belt.
- Disconnect the right half-axle coupling
- Disconnect the air conditioner compressor and place to one side without disconnecting lines.
- Unscrew both timing side engine mounts.
- Disconnect the coolant sleeve from the thermostat to the radiator and remove the air cleaner assembly.
- Disconnect coolant outlet and return lines to the vehicle interior heater from the thermostat.
- Disconnect the coolant hose from the thermostat to the expansion tank.
- Disconnect both EGR valve lines and place them outside the working area.
- Remove the expansion tank.
- Disconnect the brake servo pipe from the vane vacuum pump.
- Disconnect coolant sleeve (timing side) from the engine.
- Disconnect fuel delivery and return lines.
- Disconnect electrical connection connecting engine wiring and vehicle wiring.
- Disconnect battery positive lead from connector block.
- Release gearbox side power unit mount.
- Remove reaction rod and bracket fastening it to the body.
- Position universal hook 1860592000, then put power unit under slight tension by connecting a boom to brackets on the power unit.
- Manoeuvre the power unit so that the parts in the engine bay are not damaged. Then lift the power unit with the aid of the boom, remove from the engine bay and rest on board.
- To refit, reverse removal instructions and take care when refitting rubber coolant hoses to align the groove on the pipe with the ridge on the rigid coupling sleeve.

Copyright Fiat Auto

10.

REMOVING-REFITTING AUXILIARY COMPONENT BELT

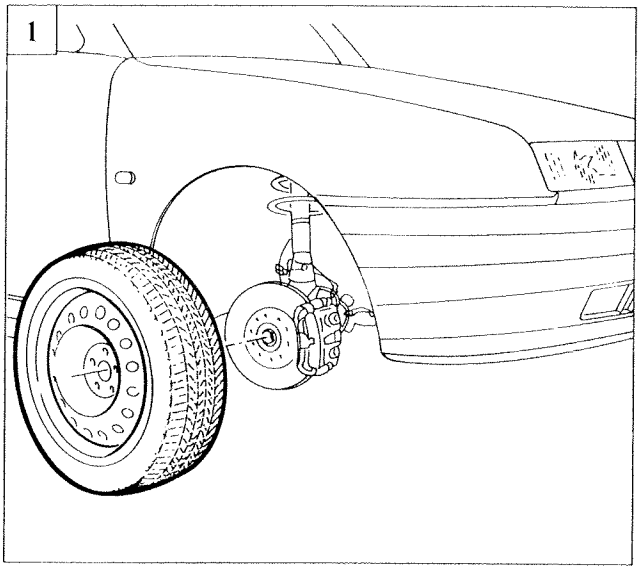

P3U09CJ01

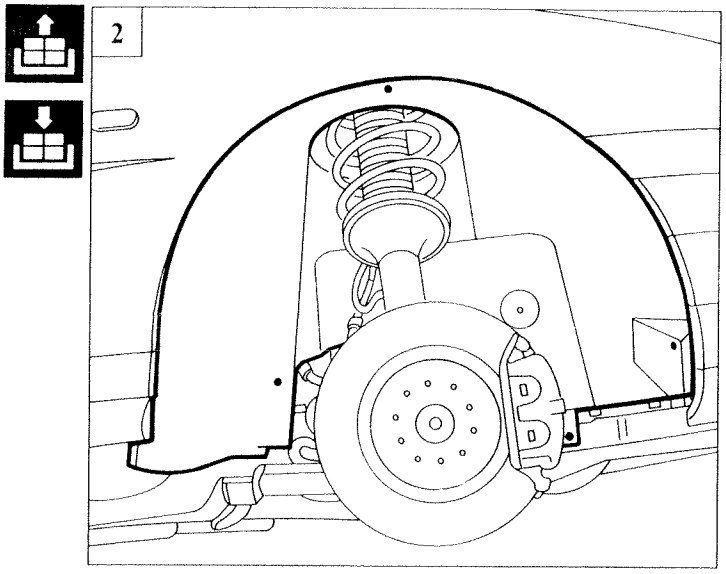

P3U09CJ02

1. Position the vehicle on a lift and remove the right front wheel.
2. Remove the right wheel arch protection in order to gain access to the auxiliary belt.

Check auxiliary belt tension and condition. In particular, check for the following: cracks, tears, surface wear (shiny, smooth patches) or hard dry parts which could result in a loss of grip. If one of these defects is present, replace the belt as described below:

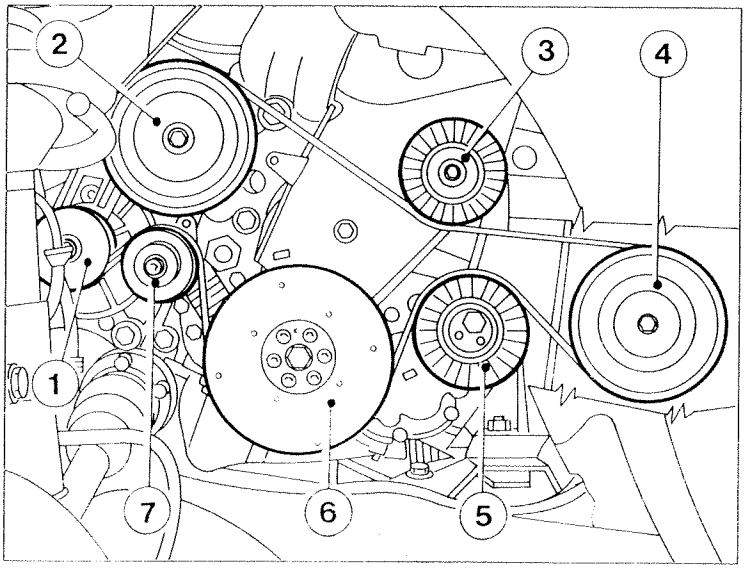

P3U12AJ02

iew of auxiliary drive belt fitted on vehicle:

1. Alternator
2. Power steering pump
3. Fixed guide pulley
4. Air conditioner compressor pulley
5. Mobile guide pulley
6. Crankshaft pulley
7. Automatic tensioner

Prevent the belt from coming into contact with oil or solvent which could impair the elasticity of the rubber with a resulting loss of grip.

If the timing belt also requires removal (see page 14), before removing the auxiliary belt, loosen the bolts retaining the control pulley (damping flywheel) because it is not possible to fit a flywheel retainer on the vehicle.

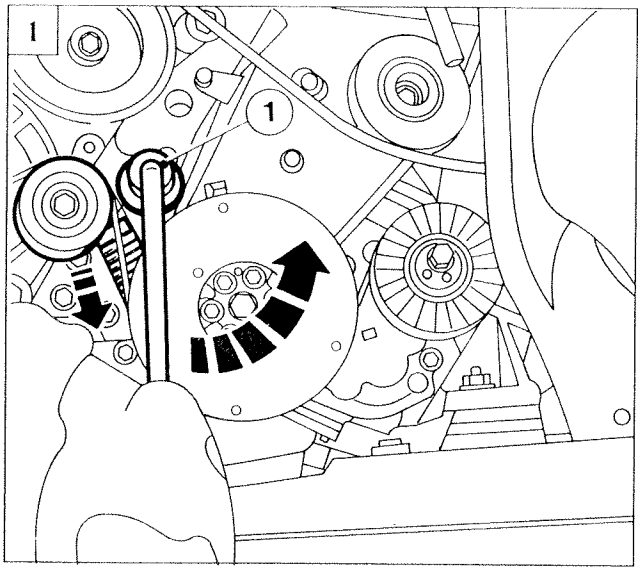

P3U13AJ01

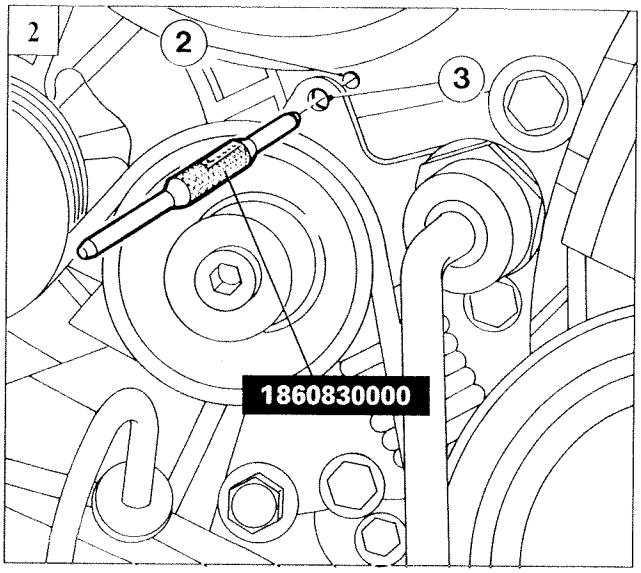

P3U13AJ02

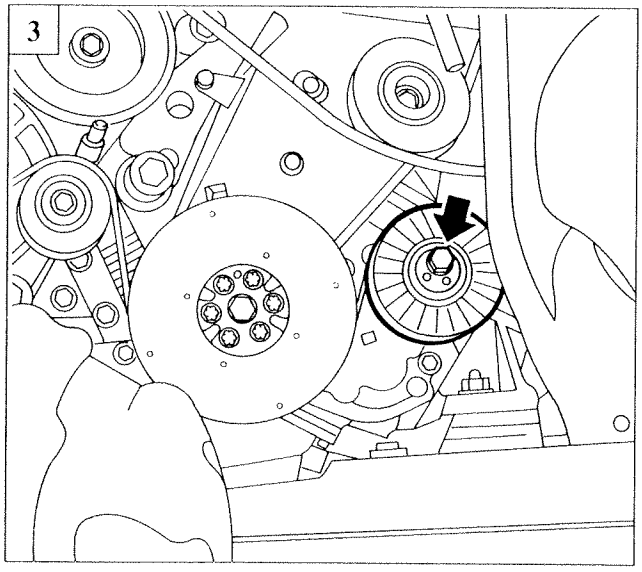

P3U13AJ03

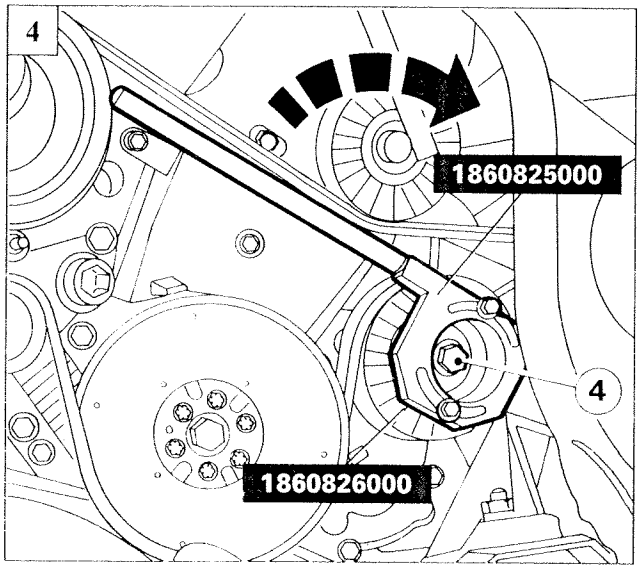

P3U13AJ04



1. Slacken the belt by turning the automatic tensioner nut (1) anticlockwise.

2. Turn the tensioner until reference hole (3) on the tensioner is aligned with hole (2) on the bracket. Then fit tool 1860830000 in order to lock the tensioner in this position.

3. Slacken tension in the mobile guide pulley by undoing the retaining bolt. Then prise off the auxiliary drive belt.

Refitting auxiliary belt and adjusting tension

4. Fit the belt by reversing removal instructions. Adjust tension by positioning tools 1860826000 and 1860825000 in the appropriate holes on the fixed guide pulley (not locked). Then turn the resulting lever up until pin 1860830000 can be pulled out freely. Lock mobile guide pulley bolt (4) in this position. The automatic tensioner preload spring will ensure the belt is correctly tensioned.

Copyright Fiat Auto

10.

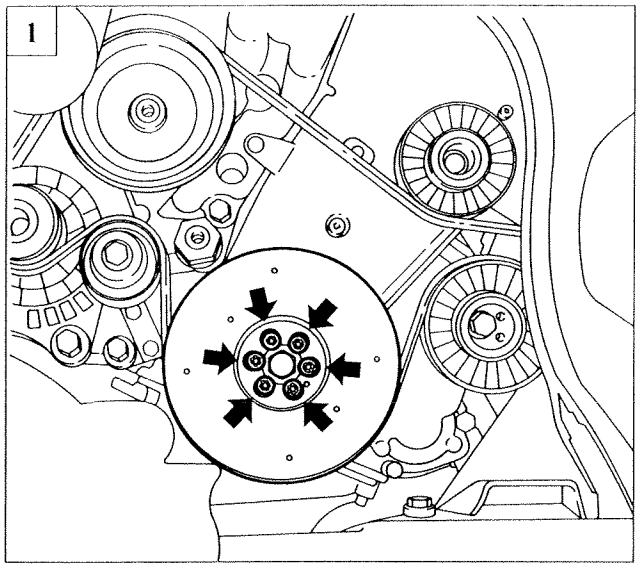

P3U14AJ05

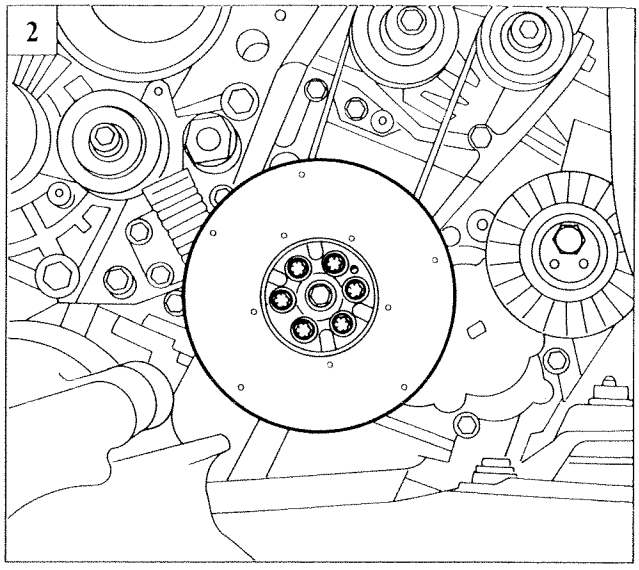

P3U14AJ06

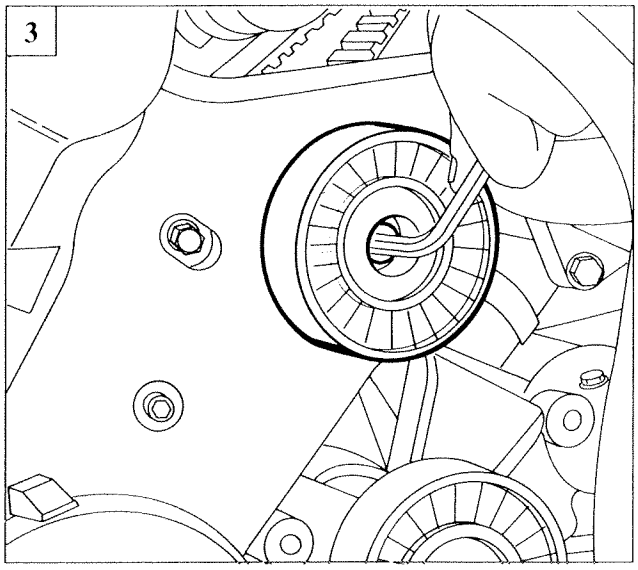

P3U14AJ07

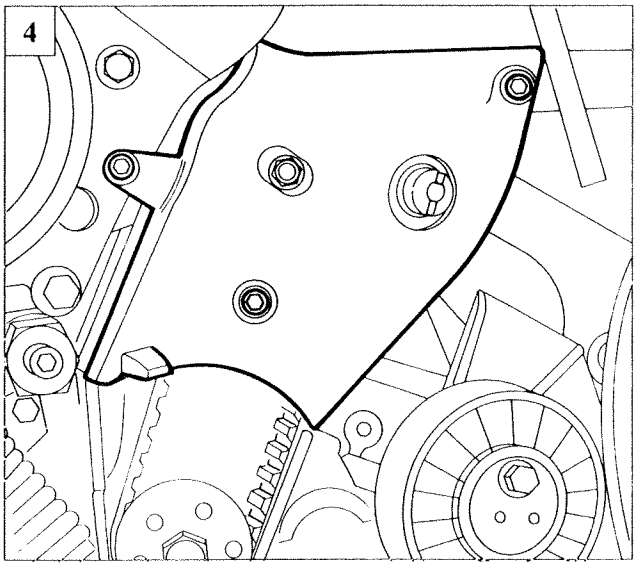

P3U14AJ08

REMOVING THE TIMING BELT

After removing the auxiliary component belt, proceed as follows:

1. Because it is impossible to position a flywheel retainer on the vehicle, loosen drive pulley (damping flywheel) retaining bolts before removing the auxiliary drive belt.

2. Remove the auxiliary drive pulley on the crankshaft (damping flywheel).

3. Remove the fixed auxiliary belt fixed guide pulley to allow removal of the lower timing belt guard.

4. Remove the lower timing belt cover

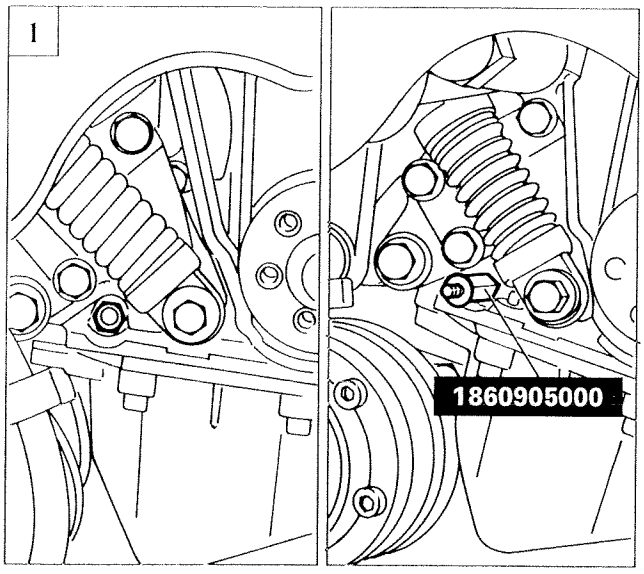

P3U15AJ08 P3U15AJ05

1. Remove the oil pump retaining bolt; position pin of tool 1860905000 in place of the bolt to record TDC.

When the 2.4 td engine (type 838 A7.000) fitted on the new "Lancia k 96 range" version goes into production, reference marks on the damping flywheel and case need no longer be considered (even though they are still present. Instead use special tool n.1860905000 to measure TDC of engine piston no. 1.

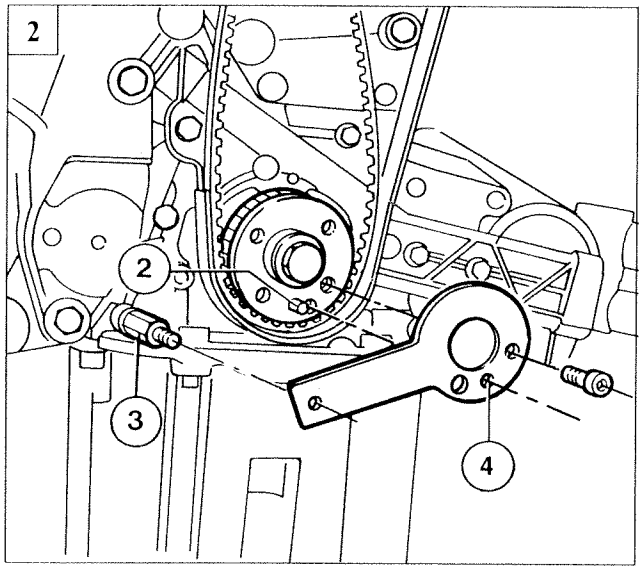

P3U15AJ07

2. Position tool 1860905000 on the crankshaft drive gear and on pin (3) fitted previously. Turn the crankshaft through small movements until the locating pin fits into hole (4) on the tool. Cylinder no. 1 is now aligned with TDC.

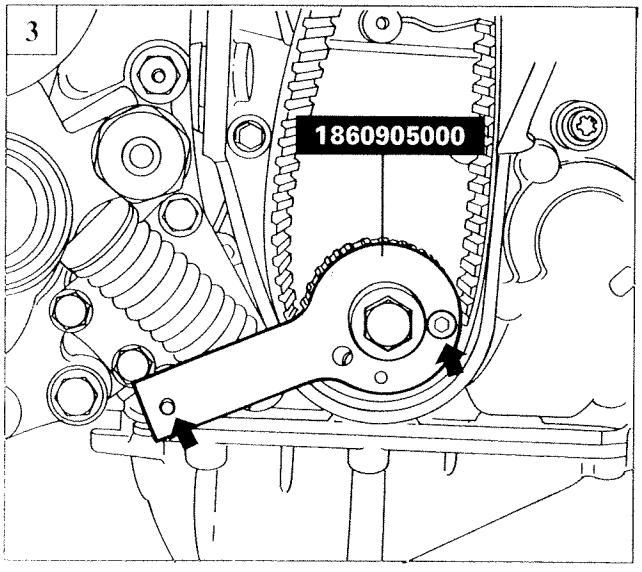

P3U15AJ06

3. Fasten tool 1860905000 to the crankshaft drive gear using the bolt indicated.

Copyright Fiat Auto

10.

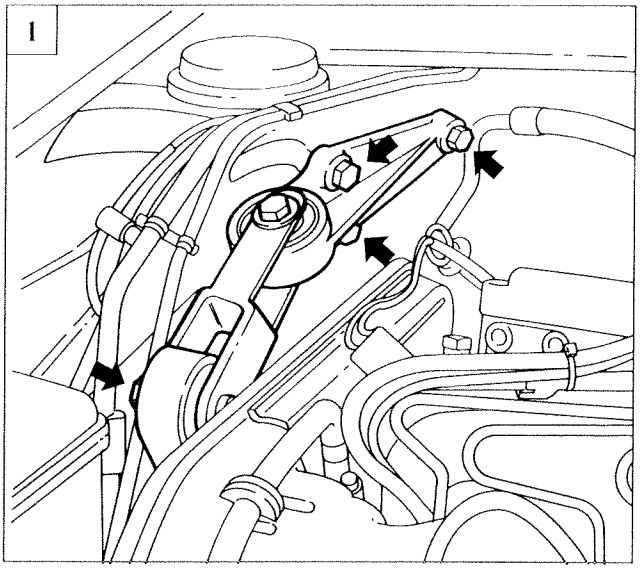

P3U16AJ05

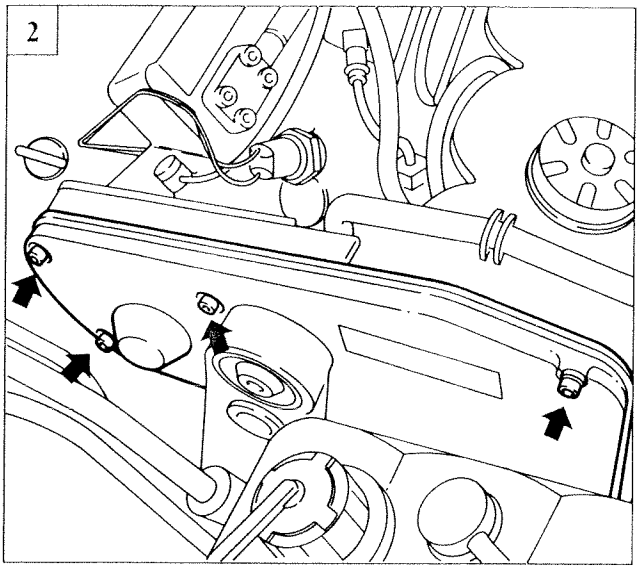

P3U16AJ06

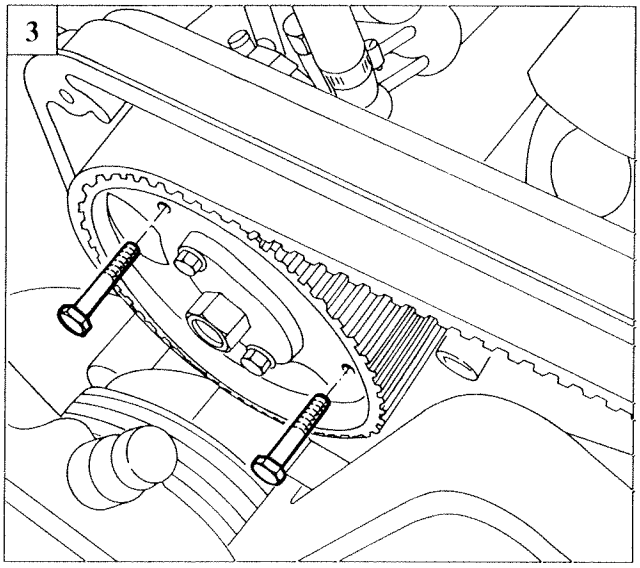

P3U15AJ04

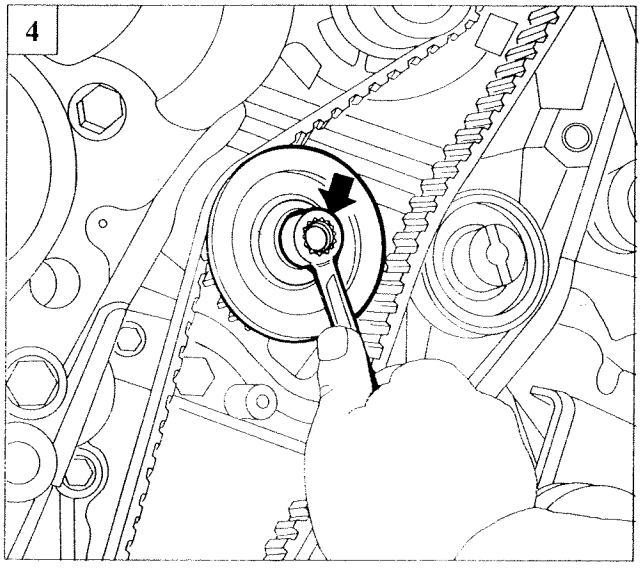

P3U15AJ03

1. Remove the reaction link and the mount by undoing the fastenings shown in the figure in order to allow the upper timing belt cover to be removed.

2. Remove the upper timing belt guard.

3. Ensure that the injection pump is in delivery phase to cylinder no. 1. If necessary, check the injection advance as described on pages 24 and 25. Then lock the injection pump pulley during timing belt replacement. Fit two service bolts with M6 thread into the relevant holes and tighten the screws into the pump mount.

4. Remove tool 1860905000, then slacken timing belt by undoing the nut shown in the figure and prise off the belt itself.

Timing belt assembly order

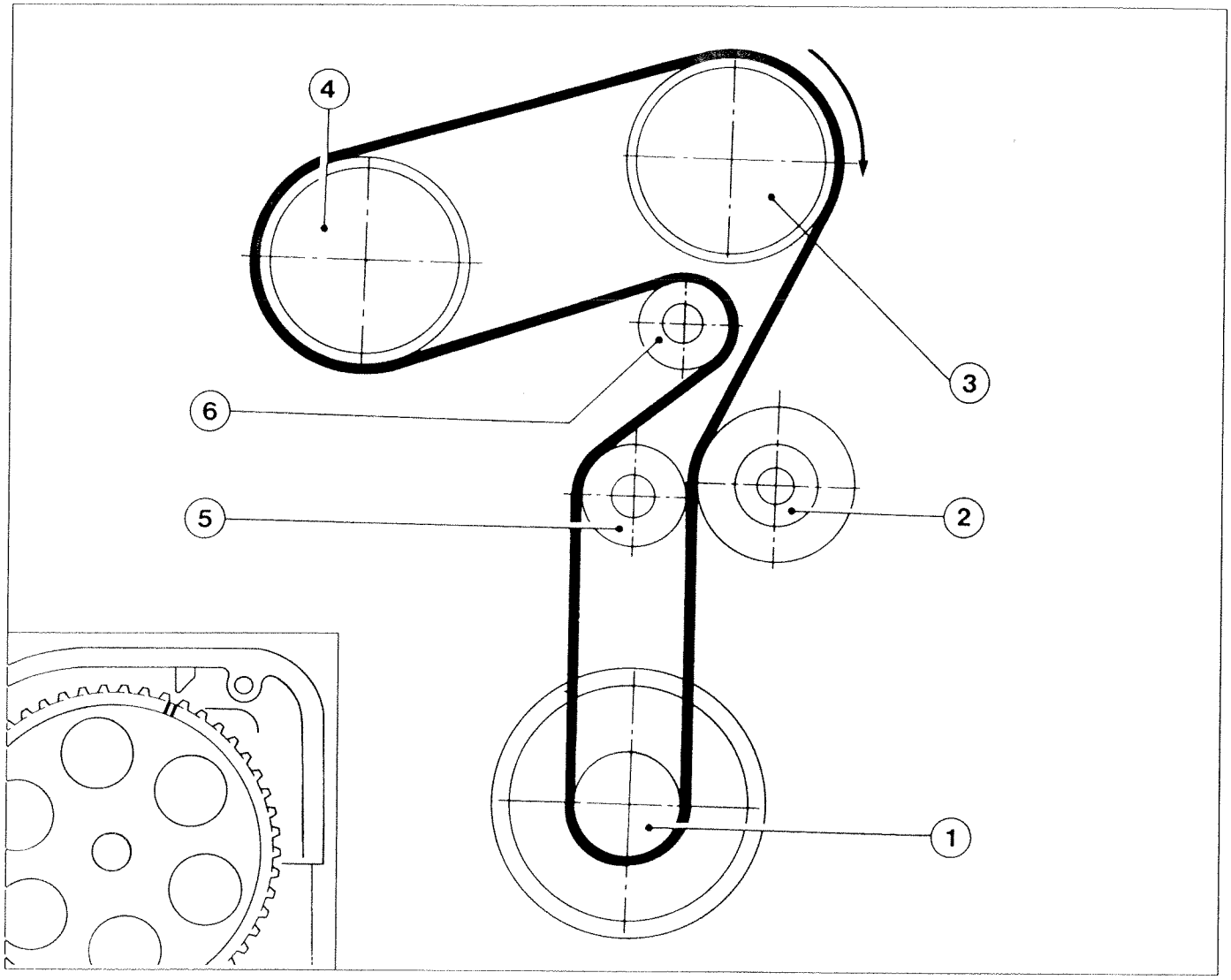

The box shows the position to be taken up by the two timing references on the camshaft pulle and cam cover.

Observe the following assemble order when fitting the timing belt:

- crankshaft drive gear (1);
- fixed guide pulle (2);
- camshaft pulle (3);
- injection pump pulle (4);
- automatic tensioner guide pulle (5);
- engine coolant drive guide pulle/pulle (6).

NOTE *When fitting the belt, avoid kinking to prevent damage to the belt structure.*

The belt has one arrow and three notches (used in production). Fit the belt so that the arrow faces in the direction of engine rotation.

Copyright Fiat Auto

1

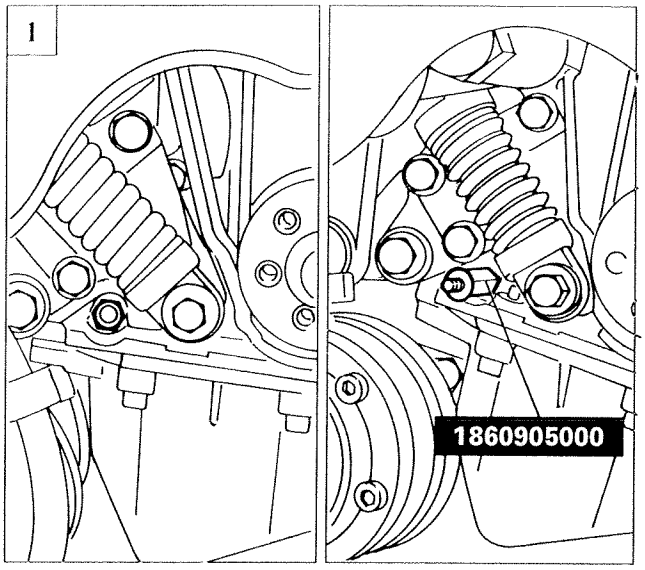

P3U15AJ08 P3U15AJ05

2

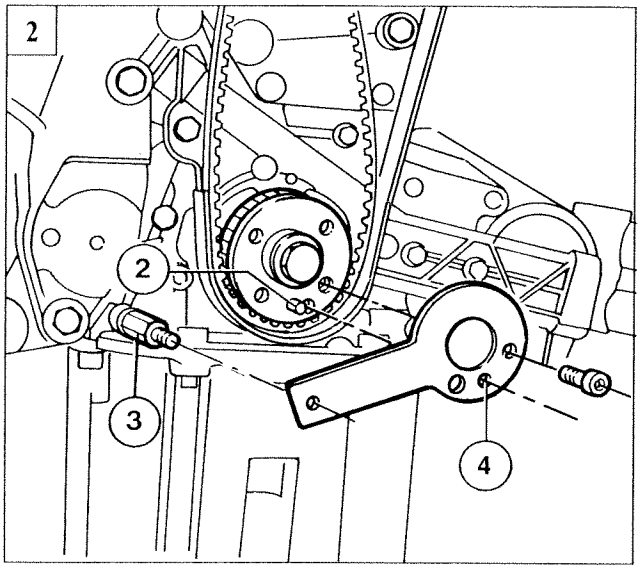

P3U15AJ07

3

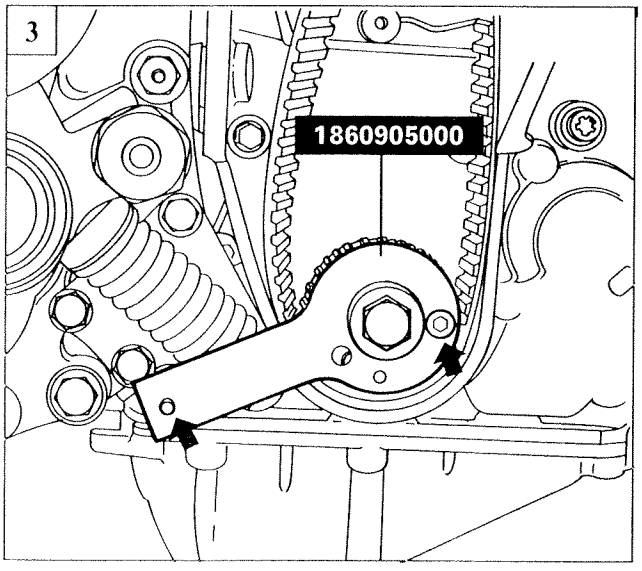

P3U15AJ06

REFITTING AND ADJUSTING TIMING BELT TENSION

When the 2.4 td engine (type 838 A7.000) fitted on the new "Lancia k 1996 range" goes into production, the reference marks on the damping flywheel and case will no longer be used (although they will still be present). Instead, specific tool n.1860905000 will be used to measure the TDC of engine piston no. 1.

1. Remove bolt (1) retaining the oil pump. Replace it with the pin of tool 1860905000 for measurement of TDC.

2. Fit the timing belt on the crankshaft drive gear. Position tool 1860905000 on the crankshaft drive gear and on pin (3) installed previously. Turn the crankshaft through small movements until locating dowel (2) fits into hole (4) on the tool. In this position, cylinder no. 1 is aligned with TDC.

3. Fasten tool 1860905000 to the crankshaft drive gear by means of the bolt indicated.

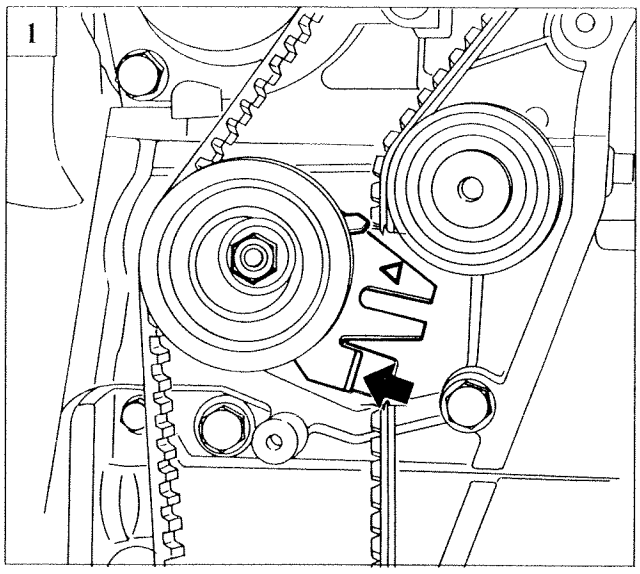

P3U19AJ01

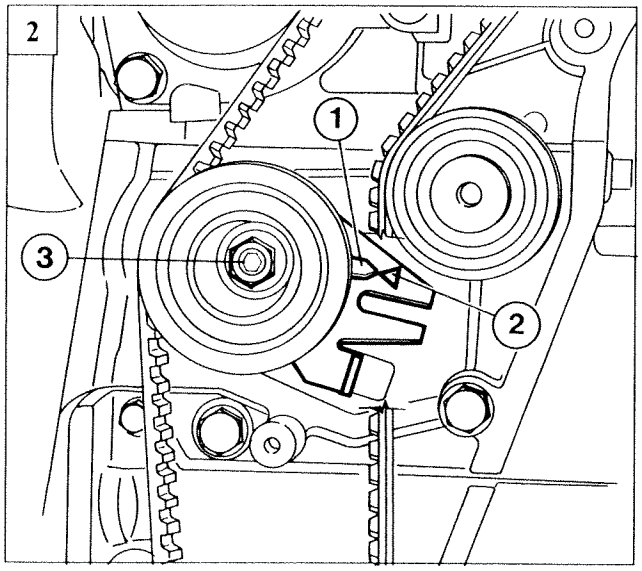

P3U19AJ02

1. Use the screwdriver to apply a force to the automatic tensioner in order to move the tensioner to the position of greatest tension. Then tighten the nut retaining the tensioner to the mount. Turn the crankshaft through two turns in its normal direction of rotation.

2. Loosen nut retaining tensioner (3) and use a screwdriver as a lever in order not to loosen the tensioner fully. Align the mobile pointer (1) on the tensioner with the fixed reference (2). Then tighten nut retaining tensioner (3) to a torque of 2.5 daNm.

CHECKING IGNITION ADVANCE

3. Remove the plug located on the pump cover and turn probe 1865090000 complete with gauge until it comes into contact with the distributor piston crown.

4. Turn the engine in the opposite direction to the normal operating direction until pump distributor piston reaches BDC as indicated on the gauge. In this position, reset the gauge to zero. Turn the engine in its direction of operation until engine piston no. 1 is turned to BDC. Under these conditions, pump distributor piston should have travelled through a stroke of 0.70 mm.
   If travel is not 0.70 mm, turn the pump case in its slot until the gauge indicates the correct value. Then tighten bolts retaining pump to the mount to a torque of 2.5 daNm. At the end, remove the gauge and refit the cap.

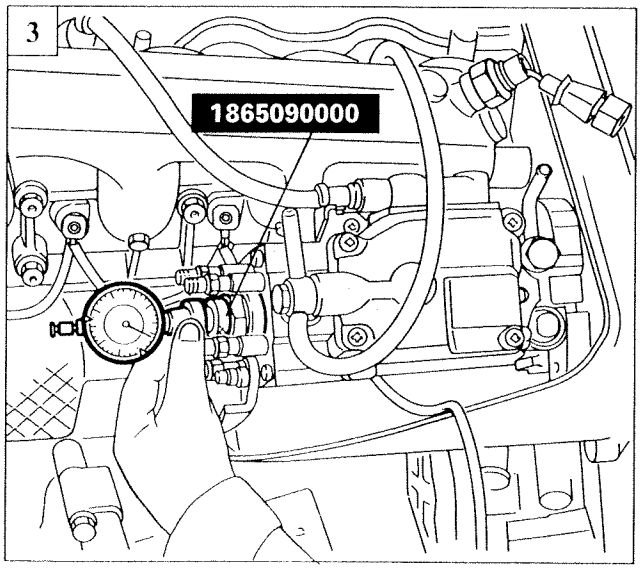

P3U19AJ03

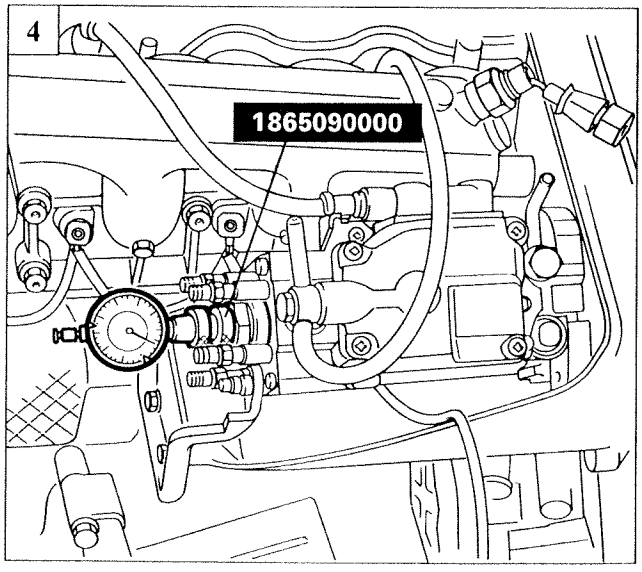

P3U19AJ04

Copyright Fiat Auto

10.

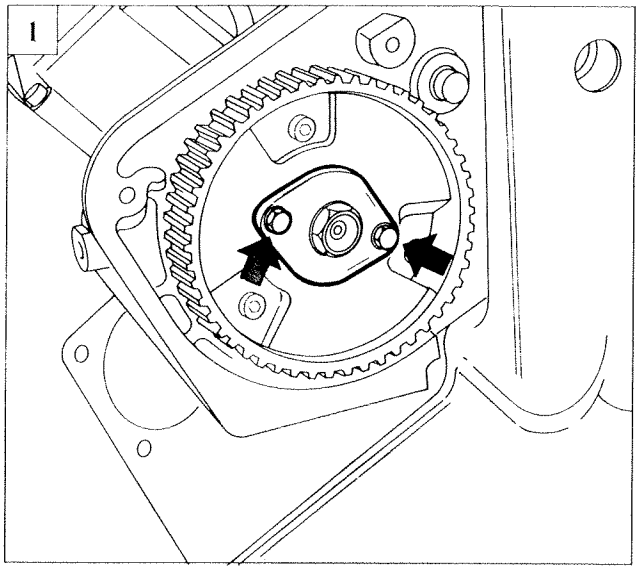

P3U20AJ01

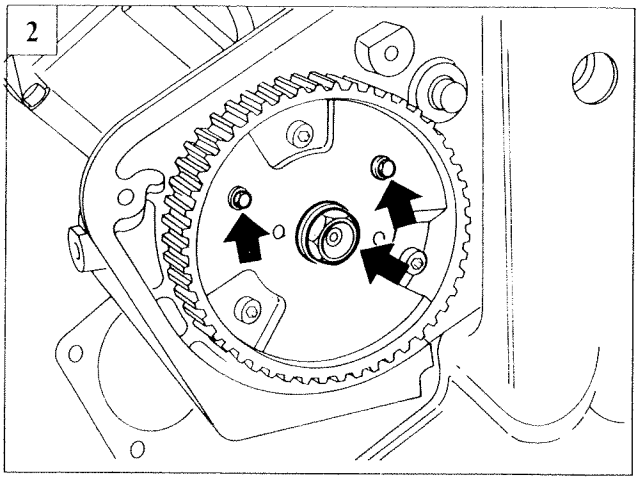

P3U20AJ02

REMOVING INJECTION PUMP

After removing the timing belt, proceed as follows:

1. Remove the fuel lines connecting the injection pump to the injectors, disconnect electrical connections and remove the plate locking the injection pump drive pulley central nut.
2. Ensure that the pulley is secured in place by means of the two service screws indicated, then unscrew the central pulley retaining nut.
3. Use tool 1842128000 to release the injection pump control pulley.
4. Unscrew the bolts fastening the injection pump.
5. Unscrew injection pump bracket fastenings and remove pump together with the pulley.

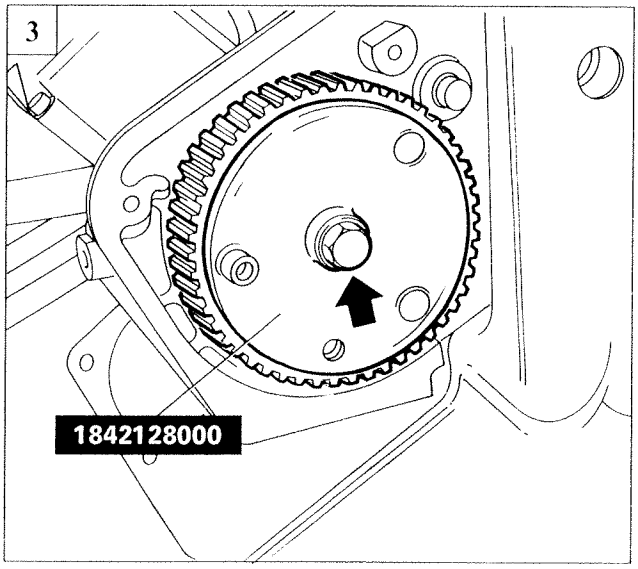

P3U20AJ03

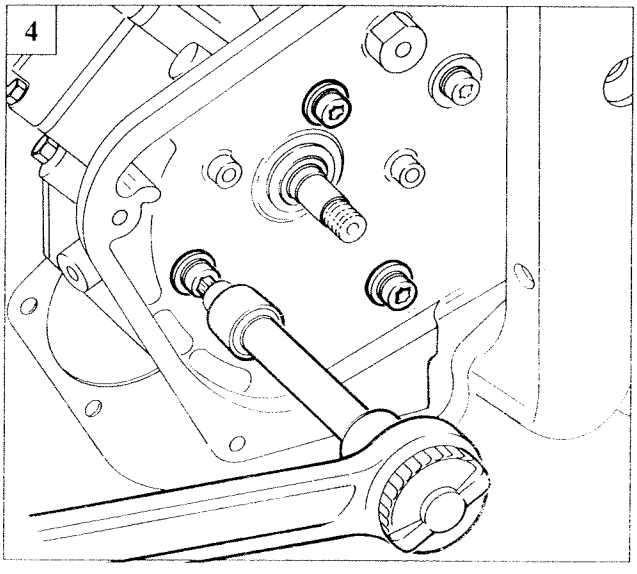

P3U20AJ04

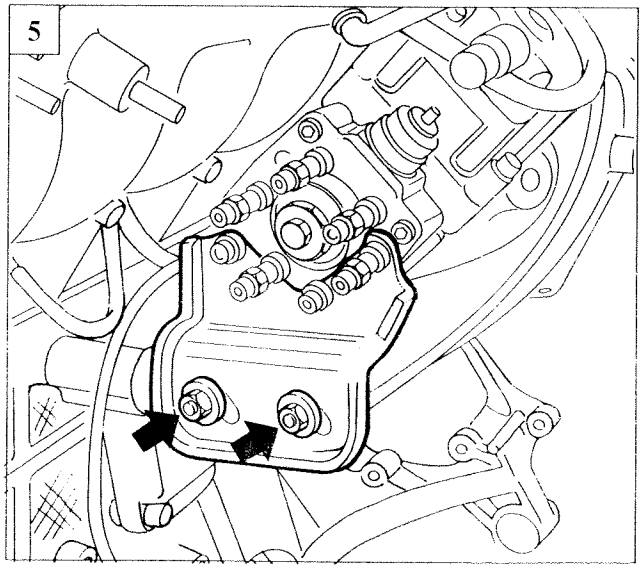

P3U20AJ05

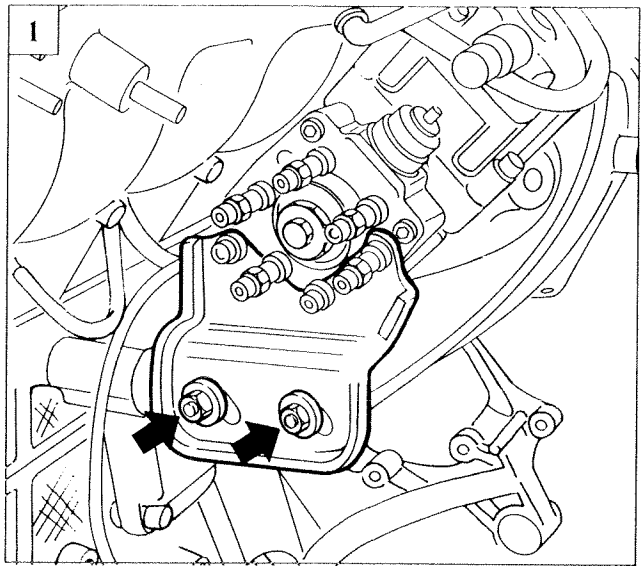

P3U20AJ05

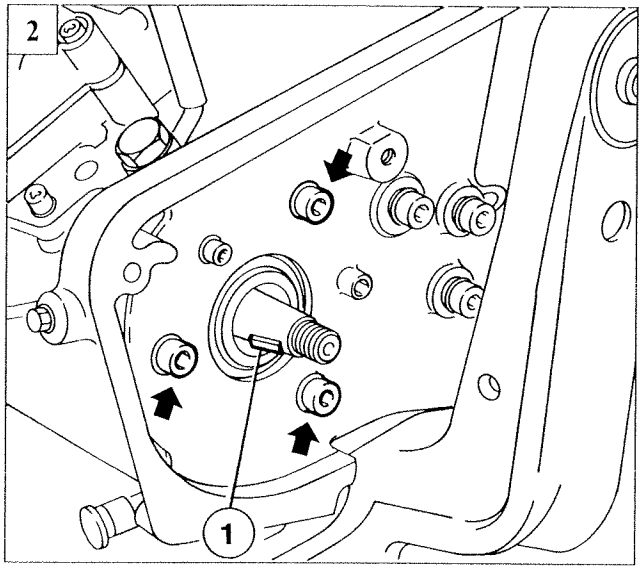

P3U21AJ01

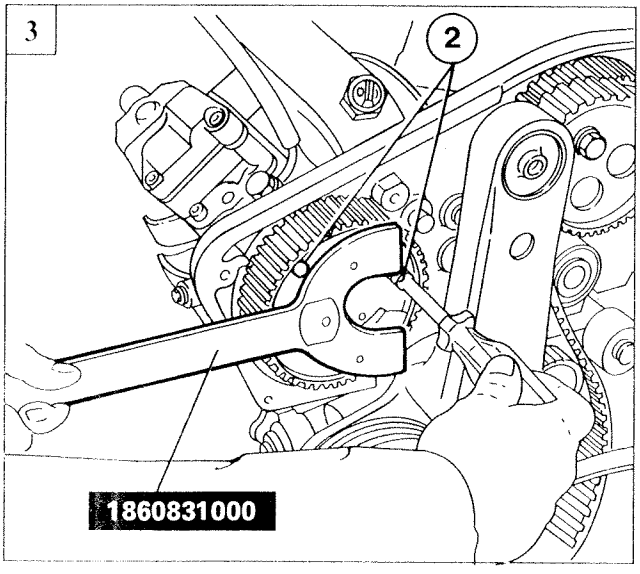

P3U21AJ02

REFITTING AND ADJUSTING INJECTOR PUMP (fitted with key - Part no. 10205820)

1-2. Fit the injection pump and leave the retaining nuts and bolts unfastened in order to allow the pump to turn in its slots while checking the injection advance. Fit key (1) into the injection pump shaft groove.

3. Fit the injection pump drive pulley to the shaft, turn into position using tool 1860831000, then lock by fitting service bolts (2) (bought locally) into the appropriate holes on the pulley, which should correspond to the threaded holes on the pump mount.

Then adjust camshaft timing, tension timing belt and check injection pump advance as described in pages 18 and 19.

If key (1) shown in fig. 2, is not available, adjust pump timing as described on the next page

10.

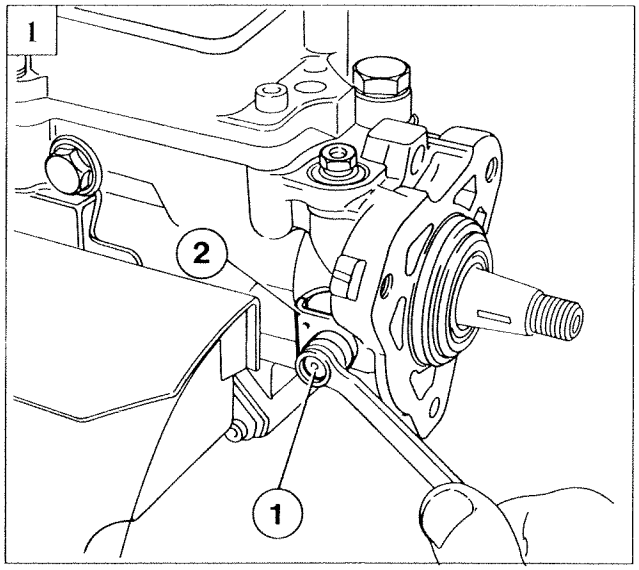

P3U22AJ01

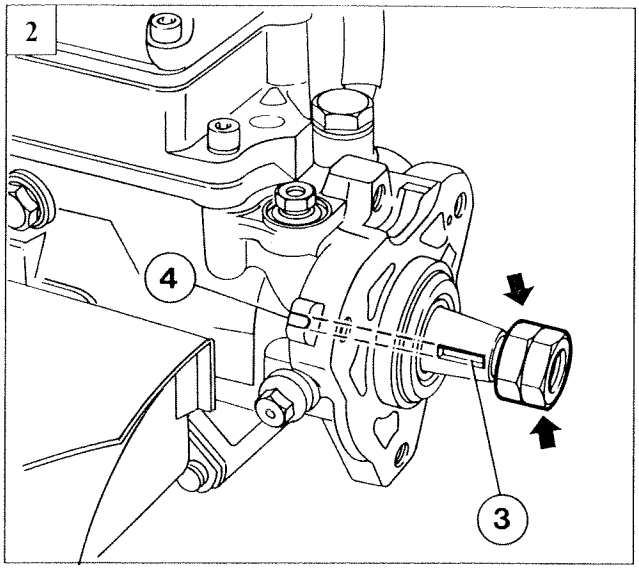

P3U22AJ02

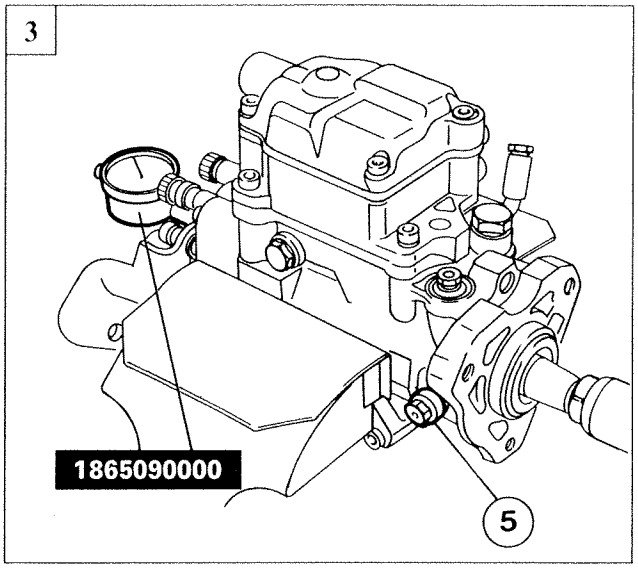

P3U22AJ03

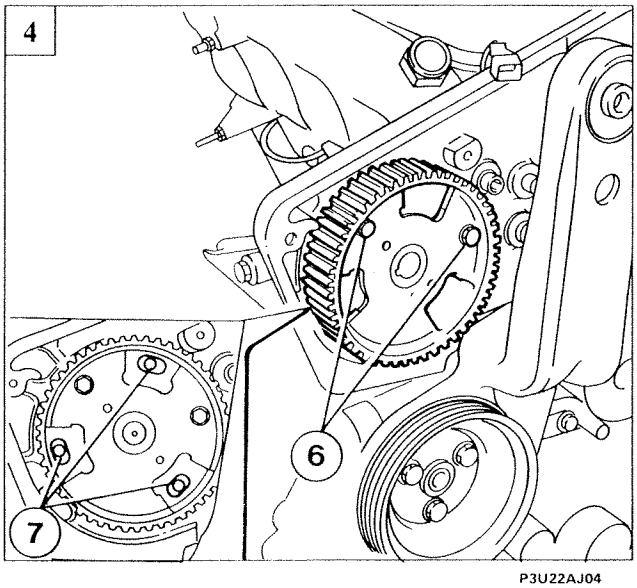

P3U22AJ04

REFITTING AND ADJUSTING INJECTION PUMP (without key - Part no. 10205820)

1. Position the injection pump and lock in a vice. Then loosen retaining bolt (1) and remove spacer (2).
2. Fit the nut and locknut on the threaded end of the pump shaft and adjust to align the key seat on shaft (3) with the notch on the pump case (4).
3. Remove the plug on the pump cover and tighten tool 1865090000 until the probe is in contact with the distributor piston crown. Turn the pump shaft anticlockwise until piston is at BDC as shown by the gauge. Reset the gauge to zero and turn the shaft clockwise until piston travel is 0.70 mm. Preven the shaft from turning by means of retaining bolt (5) without spacer. Remove tool 1865090000 and refit the cap on the pump cover.
4. Fit the timing belt on the cranksahft pinion, fit tool 1860905000 to calculate TDC as described on page.18 and check that the camshaft pulley is aligned with the fixed references (see page 17). Fit the injection pump pulley and tighten using two service bolts (6). Remove the injection pump from the vice and position on the engine. Ensure that the holes for retaining the pump case to mount (7) are in the centre of the slots.

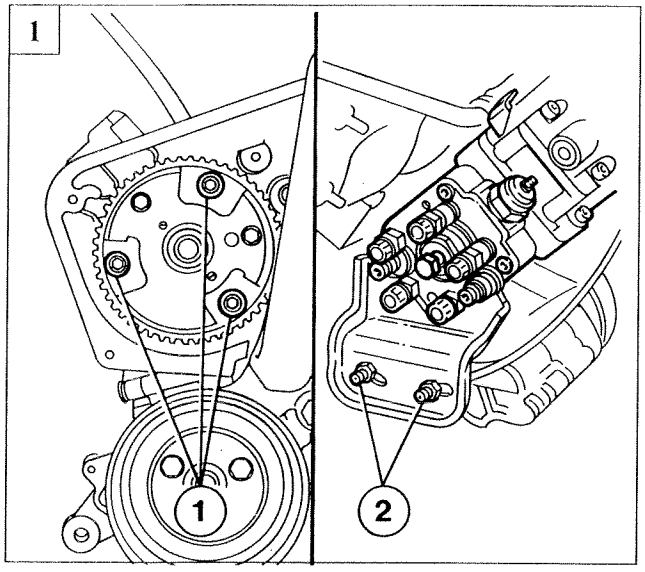

P3U23AJ01

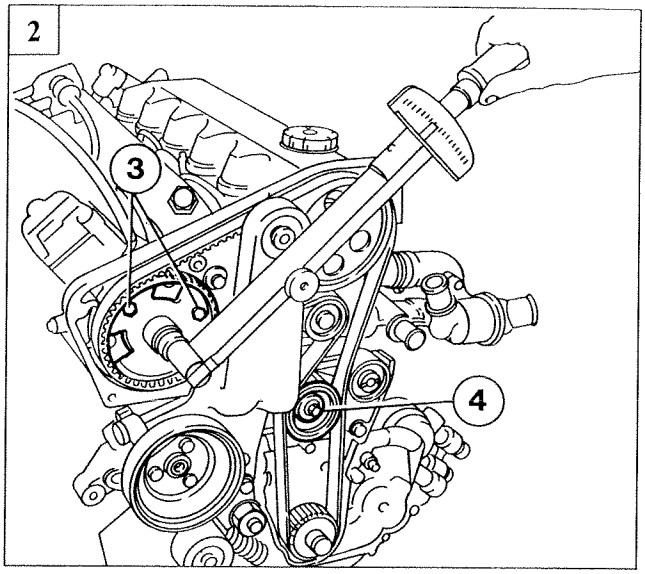

P3U23AJ02

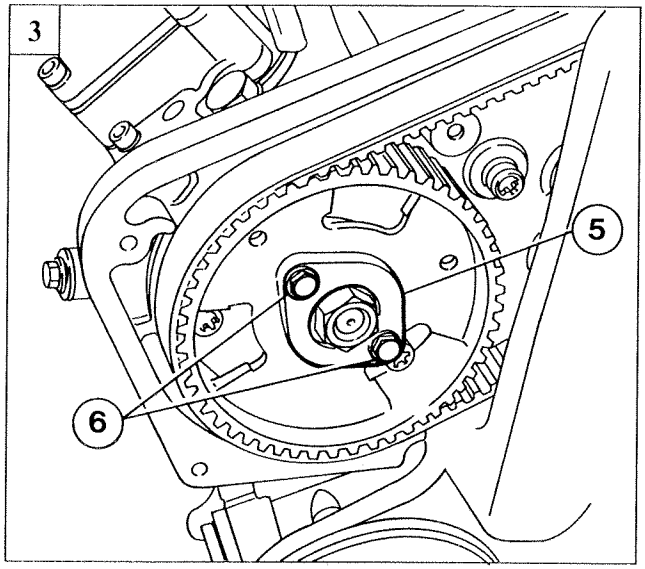

P3U23AJ03

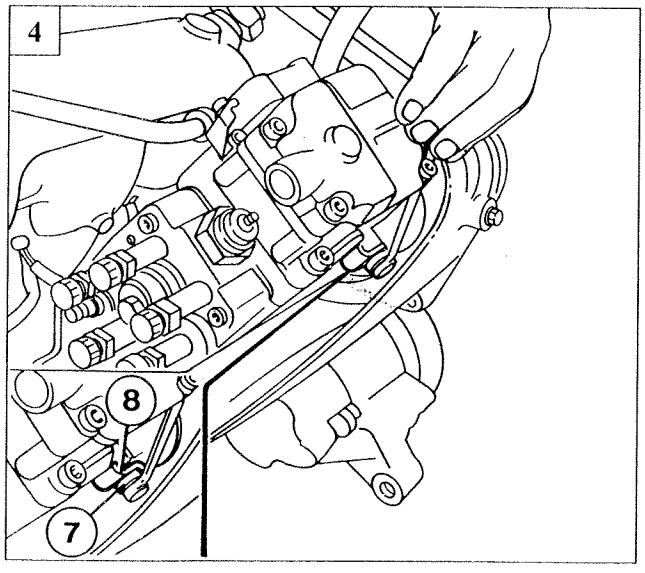

P3U23AJ04

1. Fasten the injection pump to its mounts by means of bolts (1) and (2).

2. Partly tighten central injection pulley retaining nut, making sure pulley is not locked onto the shaft. Fit timing belt completely. Remove service bolts (3) from the pulley. Pull mobile tensioner (4) until it is as tight as possible and then lock. Tighten pump shaft nut to a torque of 5 daNm.

3. Fit retaining plate (5) by means of bolts (6).

4. Loosen restraining bolt (7), fit spacer (8) and then tighten restraining bolt (7).
Lastly, ensure that the timing belt is properly fitted as described on pages 18 and 19.

Copyright Fiat Auto

10.

PROCEDURE FOR DRAINING/FILLING COOLING CIRCUIT

Draining

a) Loosen drain plug 11 (see figure), located at the bottom of the engine radiator. Collect any coolant which emerges from the system.

b) When working on the engine, ensure the system is completely empty by disconnecting sleeve 12 between cylinder head and engine block to drain off any remaining coolant.

c) Blow compressed air into the expansion tank to remove any water pockets inside bleed branches 9 and 10.

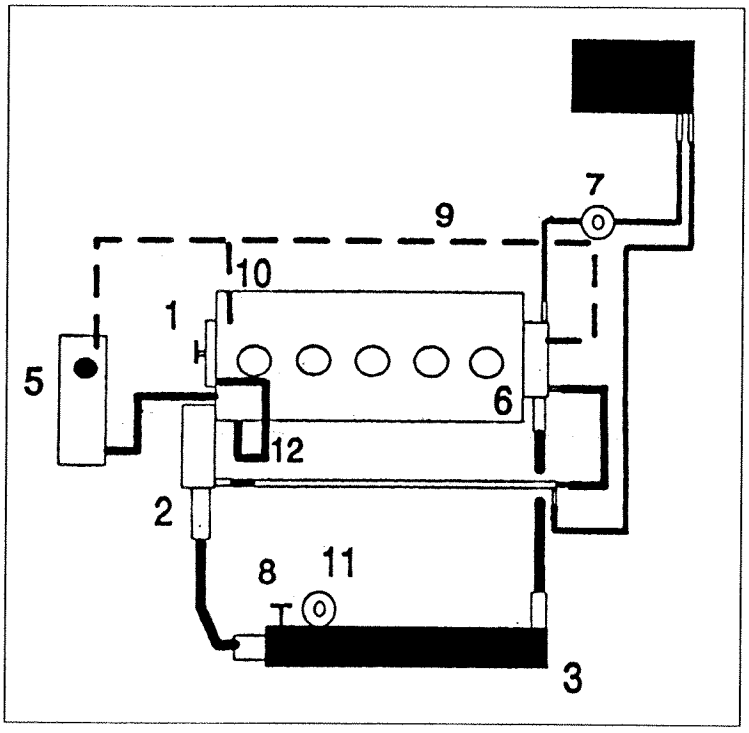

P3U24AJ01

KEY

1. Pump
2. Thermostat (no. 7776159)
3. Radiator
4. Heater
5. Expansion tank
6. Water distribution manifold
7. Bleed screw (heater)
8. Bleed screw (radiator)
9. Vent from heat outlet
10. Vent from pump
11. System drainage plug
12. Sleeve between cylinder head and engine block

Filling

a) Open bleed fitting 8 on the radiator and bleed fitting 7 on the heater inlet sleeve.

b) Fill the system by slowly pouring coolant into the expansion tank (50% water and paraflù mixture) until fluid emerges from the bleed fitting on the radiator.

Close bleed fitting 8 on the radiator.

Finish filling until fluid emerges from bleed fitting 7 on the heater sleeve (now coolant level in the expansion tank will be above the MAX level notch).

Close bleed fitting 7 on the heater sleeve.

c) Close the expansion tank plug and start up the engine. Allow to idle for 2 or 3 minutes.

Then pump the accelerator (every 30 seconds or so) to increase the revs from idling speed to 3000 /min (corresponding to 3/4 of maximum power speed).

Continue this operation until the engine cooling fan comes on for the first time. At this point, check that coolant temperature does not exceed the maximum value shown on the tmeperature gauge.

d) Return engine speed to idle level and bleed again by carefully backing off the bleed screw through just 2-3 turns to remove any residual air. Then increase engine speed slowly until a few drops of water emerge from the screws. Then tighten the bleed screws fully.

e) Stop the engine.

When the engine is cold, coolant level in the expansion tank should lie between the MIN and MAX notches. If coolant level is below the MIN mark, more coolant will obviously have to be added to restore the level to between the MIN and MAX marks.

When the operation is completed, the amount of liquid added during the filling stage should be the same as that collected during drainage.

NOTE *If the coolant should boil while carrying out the operations described under point c, stop the test in order to find and replace the faulty component.*

Copyright Fiat Auto

page

FUEL SYSTEM

INTRODUCTION 1

INPUT AND OUTPUT SIGNALS BETWEEN CONTROL UNIT, SENSORS AND ACTUATORS 3

SYSTEM OPERATION 4

- Preheating 4
- Starting 5
- In motion 5
- Speeding up and slowing down 5
- Adjusting ignition advance 5
- Exhaust gas recirculation (E.G.R.) 6
- System fault conditions 6
- Fault diagnosis 6

COMPONENT DESCRIPTION 6

- Injection pump 6
- Pump actuator position sensor 8
- Injection advance actuator 9
- Engine stop solenoid 10
- Signal injector 10
- Pre-heating control unit 11
- Accelerator pedal potentiometer 11
- Air flow meter (debimeter) 12
- Brake pedal sensor 13
- Clutch pedal sensor 13
- Rpm and phonic wheel sensor 13
- Coolant temperature sensor 13
- Speed sensor 14
- E.G.R. system 15
- BORG WARNER vacuum modulator solenoid 15
- Oxidising catalytic converter 17
- Control unit pin-out 18
- Wiring diagram 19
- Air conditioner 20

ARRANGEMENT OF COMPONENTS IN ENGING BAY 21

CHECK, REPLACING AND ADJUSTING ACCELERATOR PEDAL POTENTIOMETER 22

INJECTION PUMP OPERATION 23

page

1997 UPDATE

- Introduction 24
- General fuel system diagram 24
- Arrangement of components in engine bay 25
- Diagram showing information flow between Bosch MP 3.2 fuel system ECU and sensor/actuators 26
- Fuel system operation 28
- Control unit pin-out 29
- Hot film air flow meter (debimeter) 30
- Intake air temperature sensor 32
- Wiring diagram 33

Copyright Fiat Auto

COPYRIGHT FIAT AUTO

The reproduction, even partial, of the text and illustrations is prohibited.

The information contained in this publication is purely indicative and could be out of date following modifications made by the Manufacturer, at any time, for technical or commercial reasons or in order to conform to legal requirements in the various countries.

Fiat Auto S.p.A.
D.M.C. - M.P.S.
Servizi Post Vendita - Tecnologie Assistenziali
Largo Senatore G.Agnelli, 5 - 10040 Volvera - To (Italia)
Publication no. 506.475/20- Gennaio 1998 - 400
Printed in Italy - Tip. Giraudo - Torino
order no. 60445590

page

- INTRODUCTION 1
- SYSTEM OPERATION 4
  - Preheating 4
  - Starting 5
  - Driving 5
  - Transitory situations 5
  - Adjusting injection advance 5
  - Exhaust gas recirculation (E.G.R.) 6
  - System faults 6
  - Diagnosis 6
- DESCRIPTION OF COMPONENTS 6
  - Injection pump 6
  - Pump actuator position sensor 8
  - Injection advance actuator 9
  - Engine stop solenoid 10
  - Controlled injector 10
  - Preheater control unit 11
  - Accelerator pedal potentiometer 11
  - Air flow meter (debimeter) 12
  - Brake pedal sensor 13
  - Clutch pedal sensor 13
  - Rpm sensor and phonic wheel 13
  - Engine coolant temperature sensor 13
  - Speed sensor 14
  - E.G.R. sensor 15
  - BORG WARNER vacuum modulator solenoid 15
  - Oxidising catalytic converter 17
  - Control unit PIN-OUT 18
  - Wiring diagram 19
  - Air conditioner 20
  - Arrangement of components in engine bay 21
- CHECKING, REPLACING AND ADJUSTING POTENTIOMETER OR ACCELERATOR PEDAL 22
- ADJUSTING PUMP PHASE AND TIMING 23

Copyright Fiat Auto

COPYRIGHT Fiat Auto S.p.A.

Reproduction of all or part of the text and illustrations is prohibited.

The information in this publication is intended as a guide and could be superseded by modifications introduced by the Manufacturer at any time for technical and commercial reasons or in accordance with local regulations.

Fiat Auto S.p.A.
Direzione Marketing Commerciale
Direzione Post-Vendita - Servizi - Assistenziali
10134 TURIN (Italy) - Corso E. Giambone, 33
Print no. 506.475 - Ottobre 1994 - 500
Printed in Italy - Tip. Europrint - Torino

INTRODUCTION

The most important features of the fuel system on the 2387 TD version with indirect injection are as follows:

- fuel injection managed by electronic control unit (ECU);
- turbocharging via IHI turbocharger and intercooler;
- cross flow inlet/outlet ducts;
- exhaust gas recirculation system (EGR) to eliminate NOx;
- oxidising catalytic converter to eliminate particulate, CO and HC.

These devices ensure the version meets USA '87 regulations while also ensuring better running economy, reduced engine noise and better vehicle handling.

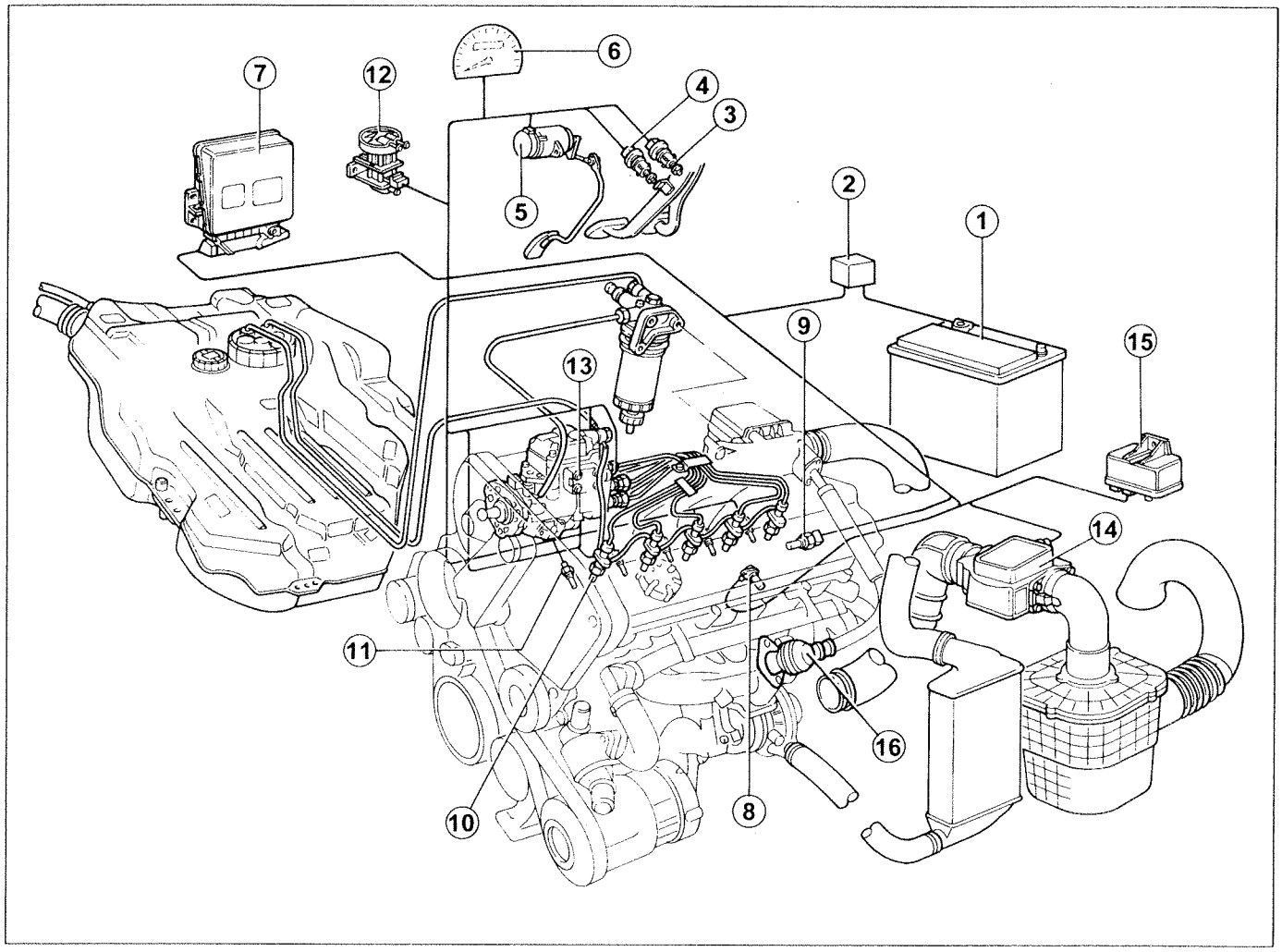

P3U01AX01

1. Battery
2. Relay
3. Clutch pedal switch
4. Brake pedal switch
5. Accelerator potentiometer
6. Speedometer
7. Electronic control unit
8. Rpm sensor
9. Coolant temperature sensor
10. Controlled injector
11. Glow plugs
12. Borg-Warner modulator valve
13. Bosch injection pump
14. Debimeter
15. Glow plug control unit
16. E.G.R. valve

Copyright Fiat Auto

10.

Electronic management of the injection pump allows moment by moment computing of fuel quantity and injection advance, direct control of driving conditions and real-time response to changes in input parameters.

Ae BOSCH MSA11 electronic control unit (1) gathers the following information:
- accelerator pedal position through an associated potentiometer (3);
- engine rpm from a sensor fitted to the engine block (10);
- air intake quantity from debimeter (7) and air temperature from a sensor fitted inside;
- diesel temperature from a sensor inside injection pump (2);
- fuel quantity actuator position signal from a sensor fitted to the actuator, contained inside injection pump (2);
- coolant temperature from sensor (4)
- effective injection start point (injector pintle opens) from controlled injector (8), fitted to cylinder 1;
- vehicle speed from speedometer sensor (9) located on gearbox;
- brake operating information from contact (6), located on brake pedal;
- clutch operation from switch (5) located on clutch pedal;
- atmospheric pressure via sensor inside control unit (1);
- air conditioner compressor activation requests;

According to input parameters, control unit (1) consults internal memory maps and corrects output signals accordingly in order to control:
- fuel quantity actuator inside injection pump (2);
- injection advance regulation solenoid inside injection pump (2);
- engine stop solenoid inside injection pump (2);
- glow plug control unit (17);
- Borg Warner vacuum modulator solenoid (14) controlling E.G.R. valve;
- glow plug warning light (16);
- fault information via infocenter (13);
- rev counter (11);
- compressor electromagnetic clutch engagement for air conditioner (15);
- tester point (12).

The control unit is also interfaced with a device to prevent starting known as an immobilizer (18).

SIGNALS FLOWING BETWEEN CONTROL UNIT/SENSORS AND ACTUATORS

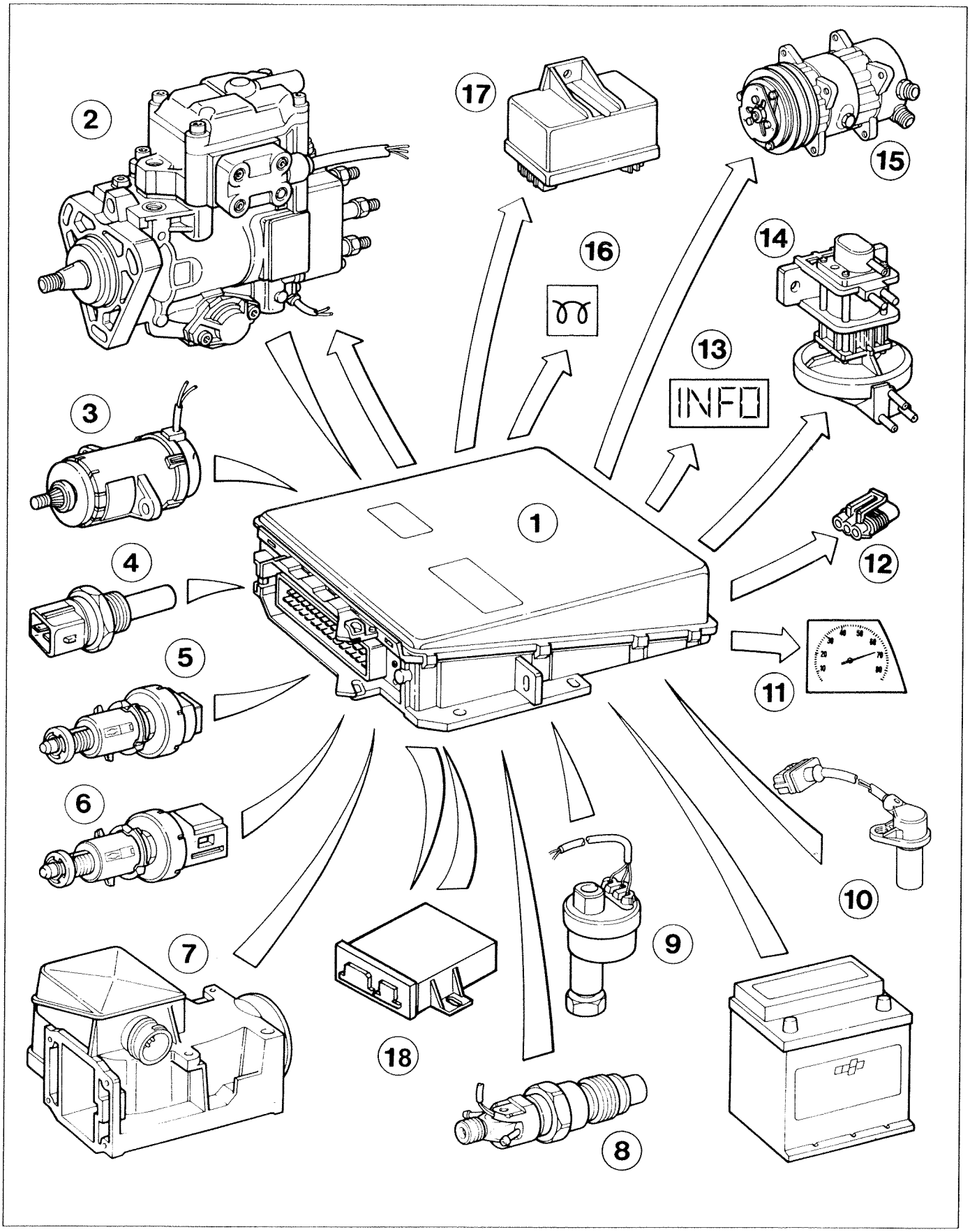

P3U03AX01

Copyright Fiat Auto

SYSTEM OPERATION

In this section we will discuss the strategies adopted by the electronic control unit under a range of engine service conditions.

Preheating

Glow plugs (4) are controlled and timed by the injection electronic control unit (19) via a glow plug control unit (6).
The time for which the glow plugs are activated (and for which the warning light on the instrument panel is lit) is directly dependent on engine coolant temperature.
The grace period (i.e. period when engine may be started after the warning light has gone out without repeating the preheating cycle) lasts about 15 seconds.
Injection control unit (19) also controls a post-heating stategy whereby the glow plugs are still supplied with power after start-up for a time computed on the basis of engine coolant temperature (up to 60° C) and rpm (up to 1300 rpm).
This specific strategy allows engine heating time and hydrocarbon emissions to be reduced following start-up.

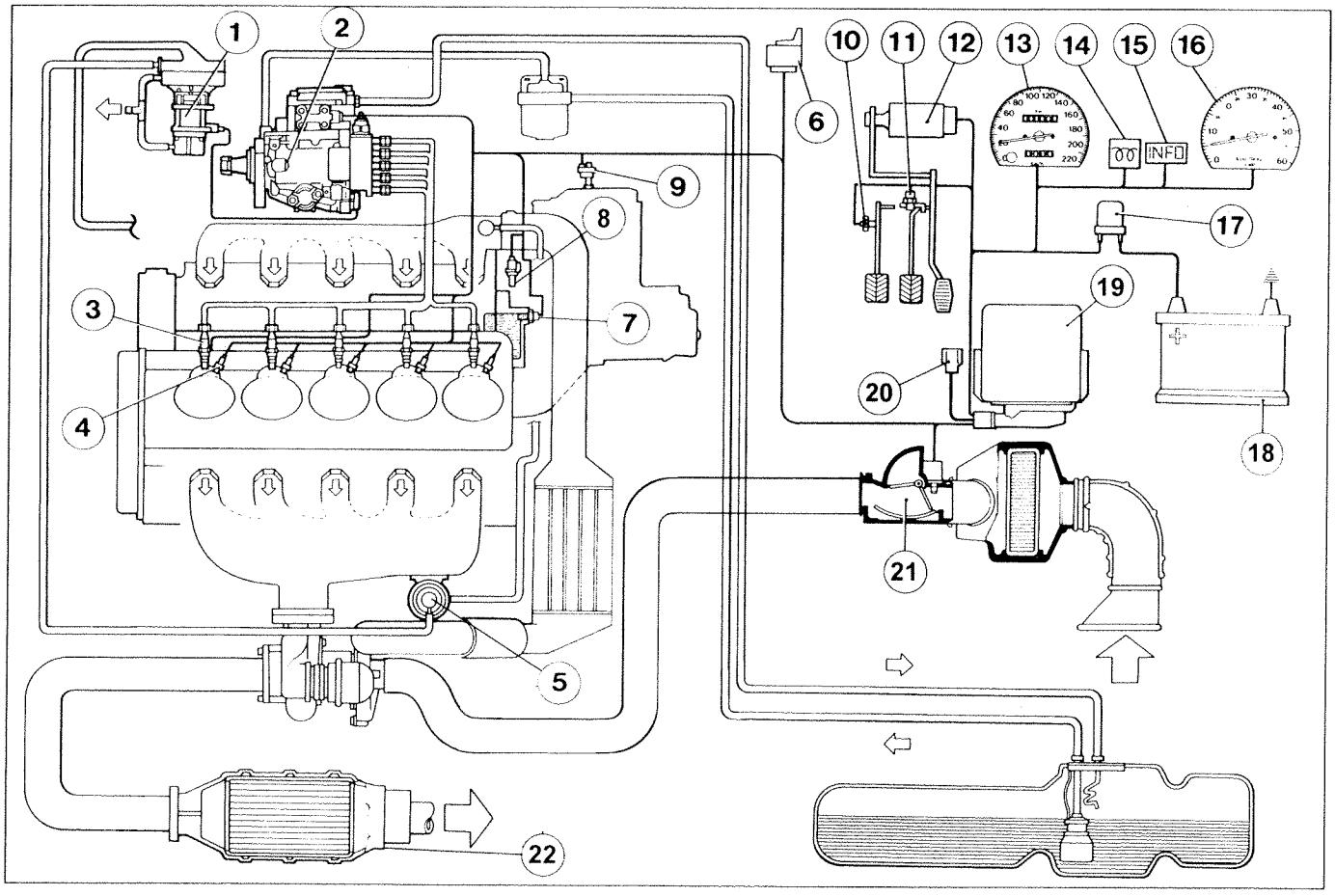

P3U04AX01

1. Borg Warner modulator valve
2. Bosch injection pump
3. Controlled injector
4. Glow plugs
5. EGR valve
6. Glow plug control unit
7. Coolant temperature sensor
8. Rpm sensor
9. Speed sensor
10. Clutch pedal sensor
11. Brake pedal sensor
12. Accelerator potentiometer
13. Speedometer
14. Glow plug warning light bulb
15. Infocenter
16. Rev counter
17. Relay
18. Battery
19. Injection control unit
20. Tester point
21. Air flow meter (debimetro)
22. Catalytic converter

Starting

During engine start-up, control unit (19) does not recognise the signal from accelerator pedal potentiometer (12); acceleration commands do not therefore influence the start-up procedure.

Fuel flow is determined solely by rpm and coolant temperature.
During start-up, the control unit determines injection advance time on the basis of a signal from coolant temperature sensor (7), ignoring the signal from signal injector (3).

In motion

When the vehicle is in motion, ECU (19) computes fuel flow on the basis of signals from accelerator pedal potentiometer (12) and rpm sensor (8). By means of a rotary electromagnetic actuator, the ECU moves the regulation cursor, which in turns controls effective pump stroke and thus fuel quantity.
The quantity of fuel to be injected is corrected on the basis of:

- signal from debimeter (21) (intake air quantity) in order to obtain maximum possible fuel flow without exhaust smokiness
- diesel temperature, in order to compute the exact weight of fuel injected. Although the pump controls the volume of fuel, it is still necessary to compute the weight of fuel injected, which depends on density (and thus temperature) in order to caculate the air/fuel ratio. As an example, the weight of 1 cc. of diesel at 0°C is not the same as the weight of the same volume at 50 °C.
- intake air temperature and atmospheric pressure, in order to optimise the air/fuel ratio to engine service conditions.

Maximum output is limited by following a maximum torque curve, in turn dependent upon engine rpm.
The actual position of the fuel quantity actuator, required for sending the exact amount of fuel to injectors, is recorded by an inductive sensor fitted to the actuator. The ECU compares actual data with theoretical data to correct actuator position until the actual position coincides with the theoretical position.

Speeding up and slowing down

Control unit (19) implements a strategy designed to modulate engine operation during transitory situations of acceleration and deceleration in order to avoid unstable operating conditions (e.g. jerks and juddering) and improve handling.
The ECU gathers information on gear currently engaged from the engine rpm and vehicle speed sensor, while a switch on the clutch pedal provides it with data on gear changes. Whereas sudden changes in input parameters (accelerator pedal and engine rpm) bring about abrupt changes in fuel flow with conventional systems, with this system the ECU controls fuel delivery gradually to alter the output curve in favour of improved handling.
A signal from the brake switch is compared with a signal from the accelerator pedal. When both signals are present at the same time for longer than 0.6 seconds below a speed of 1400 rpm, the control unit considers this a fault situation and cuts in to reduce speed to idle level.
When this fault occurs, a quick press of the accelerator pedal restores the ECU to normal management status.

Injection advance adjustment

Advance (injection point) is defined by the quantity of fuel injected, engine rpm, coolant temperature (up to 60 °C) and a signal from the atmospheric pressure sensor.
Injection control unit (19) (see figure on page 4) compares injection start point i.e. output from signal injector (3) with the theoretical injection instant to control a solenoid. This in turn modulates pressure acting on the advance variator piston to adjust actual advance until it coincides with the theoretical value.

Copyright Fiat Auto

Exhaust gas recirculation (E.G.R.)

An exhaust gas recirculation system (E.G.R.) has been fitted to reduce NOx (nitrogen oxide) emissions further. On the basis of fuel flow, rpm, intake air temperature and coolant temperature (from 60° C), injection control unit (19) controls a BORG WARNER vacuum modulator valve (1), which in turn controls the E.G.R. valve (5). E.G.R. valve (5) moves a plunger to regulate the flow of burnt gases from the exhaust manifold to the intake manifold.These gases are mixed with the intake air and then introduced into the cylinders. This achieves two results:
- less air is introduced;
- combustion temperature is reduced (due to the presence of inert gases) to reduce the formation of NOx (nitrogen oxides).

Injection control unit (19) is provided with constant information on recirculated gas quantity by debimeter (21). The information is used to adjust the flow of recirculated gas drawn up by the engine to design values. A lower quantity of exhaust gas would increase NOx emissions, a higher quantity would increase smokiness.
Information on the deviation of recirculated gas quantity from specified levels is obtained indirectly using the following equation:

Qam - Qar = Qgr

Qam = theoretical air quantity mapped in the control unit for a given engine service condition;
Qar = quantity of air actually flowing through the debimeter (i.e. taken up by the engine) at the same engine service point;
Qgr = deviation of recirculated gas quantity from specified levels.

If the recirculated gas quantity is correct, for a given engine service point, the amount of air drawn up by the engine must be equal to the mapped quantity. Qgr must therefore be nil.
If Qam is greater than Qar, the quantity of air flowing through the debimeter must be lower than the theoretical level, i.e. recirculated gas quantity is greater than specified (Qgr » 0). In this case, the control system sends a command to the EGR valve to reduce flow to cancel out the Qgr value.
The system behaves in a similar way if Qar » Qam.
The absolute atmospheric pressure signal is used to control the modulator solenoid. It tells the control unit when the vehicle is being driven at altitude so that the recirculated gas quantity can be reduced to ensure engine smokiness remains within acceptable limits.

System faults

When part of the system stops working (signal not produced or signal not properly recognised), the driver is informed of the fault by means of a message displayed on the infocenter screen.
In the case of signals crucial to implementation of the in jection strategy, the injection control unit is able to replace the parameter with an average value saved in the unit memory (recovery value). Performance is reduced but operation is nevertheless safe for the engine.

Fault diagnosis

For system testing, serial line (20) is used for connection to a Fiat/Lancia Tester and a Computerised Test Station. The module required for the injection system is coded M34A

COMPONENT DESCRIPTION

Injection pump

In an electronic injection pump, the hydraulic head with high pressure pump and operating parts are the same as used on a mechanical injection pump.
On this electronically controlled pump, flow is governed by an electromagnetic actuator (2) (see drawing on page 7). Actuator rotation is converted into linear movement of regulation cursor (6) by means of a cam coupling.
The flow to be sent to the injectors is computed according to accelerator pedal position (i.e. signal transmitted by potentiometer connected to the pedal) and the number of revs recorded by the sensor. Inductive sensor (8) fitted to the regulation cursor control shaft informs the control unit of the rotation angle set by the electromagnetic actuator (2) and consequently the position of regulation cursor (6).

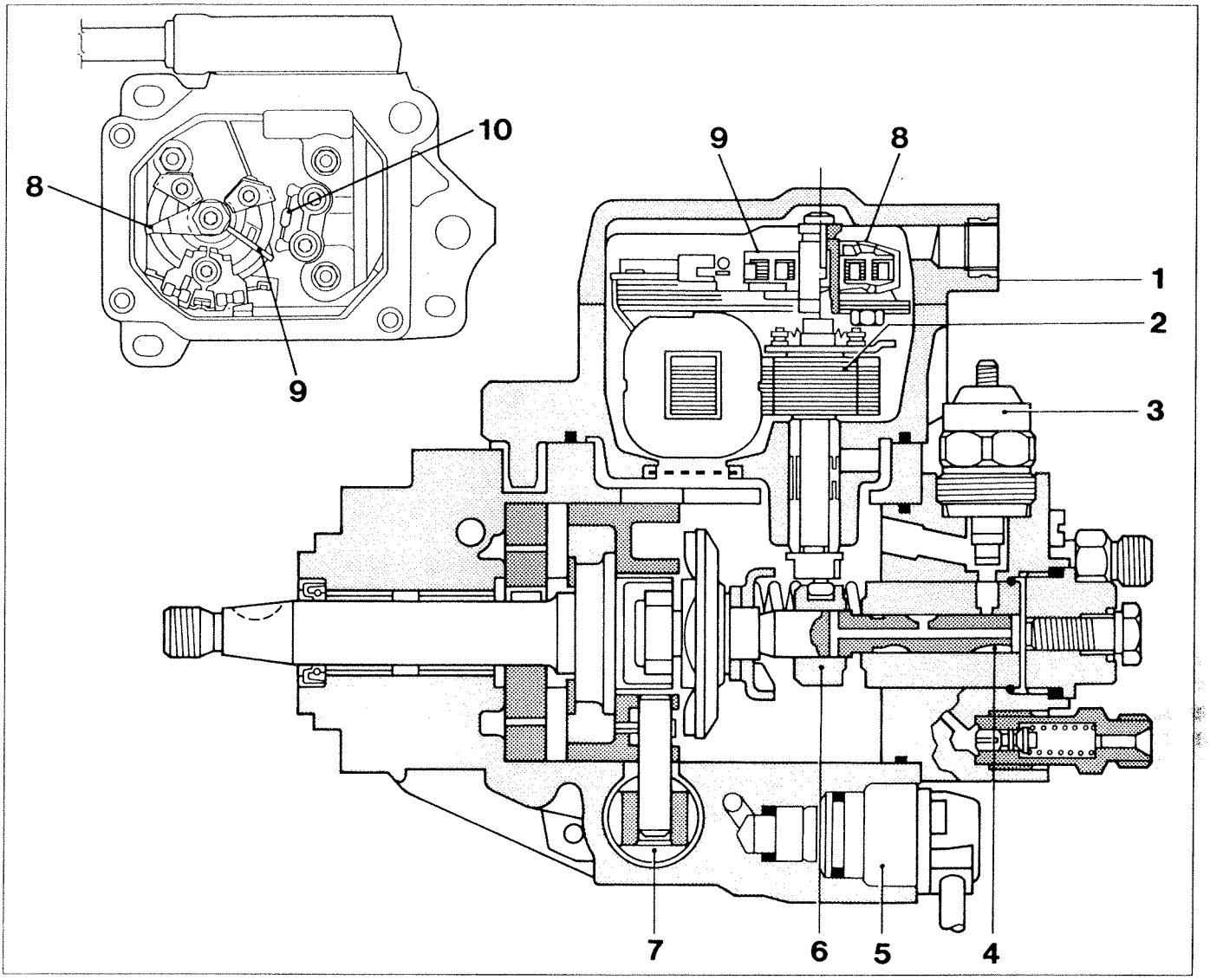

P3U07AX01

1. Pump cover
2. Electromagnetic actuator
3. STOP solenoid
4. Distributor pistonn
5. Injection advance actuator
6. Regulation cursor
7. Injection advance variation piston
8. Mobile ring
9. Reference ring
10. Diesel temperature sensor

After comparing the position of regulation cursor (6) transmitted by sensor (8) with the position saved in its memory, the ECU performs a correction, taking into account fuel temperature recorded by sensor (10) and thus fuel density, until actual position of regulation cursor (6) coincides with theoretical value.

The exact amount of fuel required for the specific driving conditions is thus obtained to achieve: peak performance with good fuel economy and minimum levels of smokiness.

Regulation of injection point (advance) depends on the quantity of fuel to be injected, engine rpm and engine coolant temperature.

The controlled injector informs the control unit on actual injection advance, i.e. point at which needle valve begins to move. On the basis of these signals, the ECU corrects the advance set by the injection advance actuator until the theoretical level is achieved.

Copyright Fiat Auto

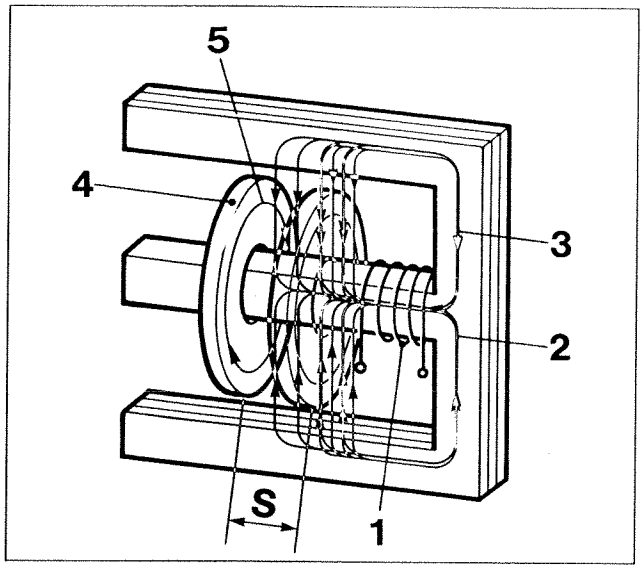

P3U08AX02 P3U08AX01

Pump actuator position sensor

Principle of operation

The sensor used in the Bosch electronic pump to identify actuator position exploits the following principle:
Magnetic field (3) is set up around shaped magnetic core (2) by means of coil (1) wound around one branch of the core, which receives an alternating current.

When disc (4) in conductive material is fitted on the central branch of the core, disc position defines the limit of magnetic field (3).

Flow changes inside the disc set up an electrical field, which creates currents (5) known as "Foucault currents".

If disc (4) is moved, the intensity of magnetic field (3) changes; if magnetic field (3) is to be maintained constant, the intensity of current sent to coil (1) must be changed. This current change is proportional to movement S of disc (4).

Description of operation

The core is specially shaped in this particular case (see figure below).
Two coils L1 and L2 are wound onto the core. Coil L2 with fixed ring (2) forms the reference system. Coil L1 with mobile ring (1), integral with pump actuator shaft, constitutes the measurement system.

The control unit sends an alternating current of fixed amplitude and frequency to coil L2. Coil L1 receives the same current offset by 180° so that the sum of the two currents is zero.
When ring (1) shifts, magnetic field intensity alters. This brings about a change in the amplitude of current in coil L1 and the sum of currents becomes other than zero.
At this point, the ECU alters the current sent to coil L1 in order to restore the sum of the two currents to zero. The size of the change in current to coil L1 is proprtional to the movement of mobile ring 1. The control unit thus obtains information on pump actuator position.

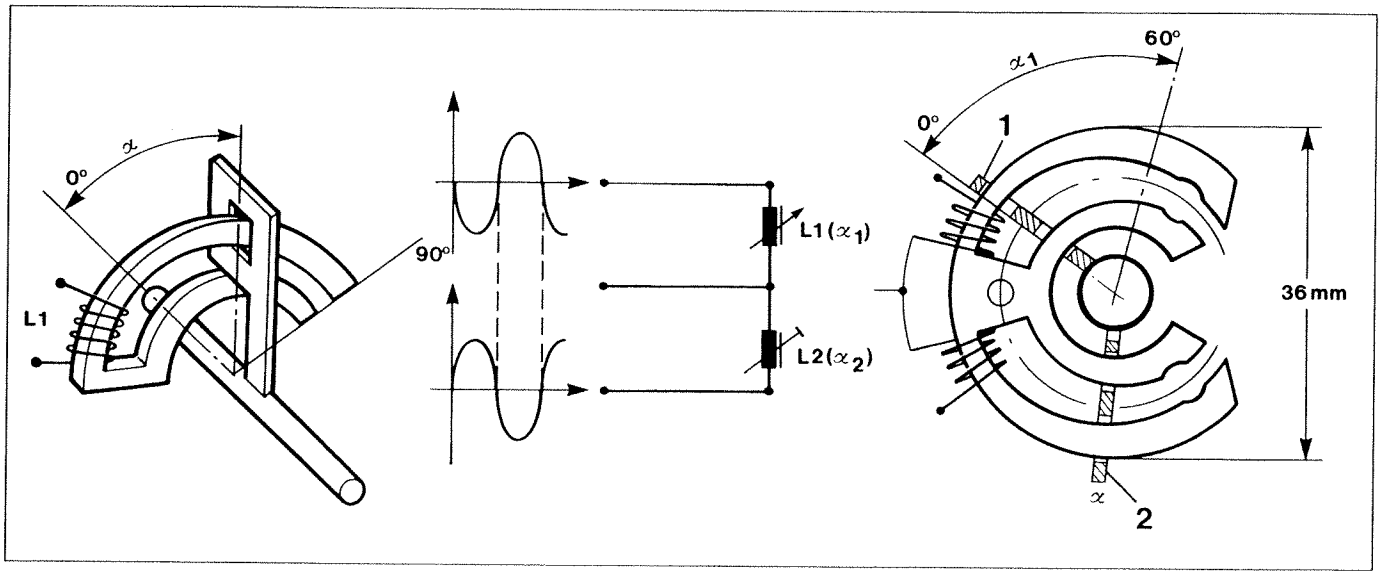

P3U08AX03

Injection advance actuator

The advance is altered by modulating pressure in chamber (1) communicating with pump case via pulse solenoid (3).
During operation, fuel pressure inside the pump reaches chamber (1) and exercises a thrust on piston (2) that is countered by spring (4) and pressure in chamber (5).

Solenoid (3) is controlled by the ECU in order to restore pressure in chamber (1) to a value corresponding to the required injection advance. Excess pressure is discharged into chamber (5), which carries fuel back to the tank.

The position of piston (2) is determined by the difference between pressures acting on the two faces. The position assumed by piston (2) also determines the position of pin (7), which is fitted in piston seat (6): when roller carrier race (8) is turned, the cam disc phase is also altered. As a result, the rollers lift the rotary cam disc earlier in order to advance the delivery phase by a very specific angle.

With the solenoid open, the pressure drop is maximal and injection delay is maximal. When the valve is operated, injection start point is gradually advanced according to the pressure drop.
Solenoid (3) remains open if not electrically activated.

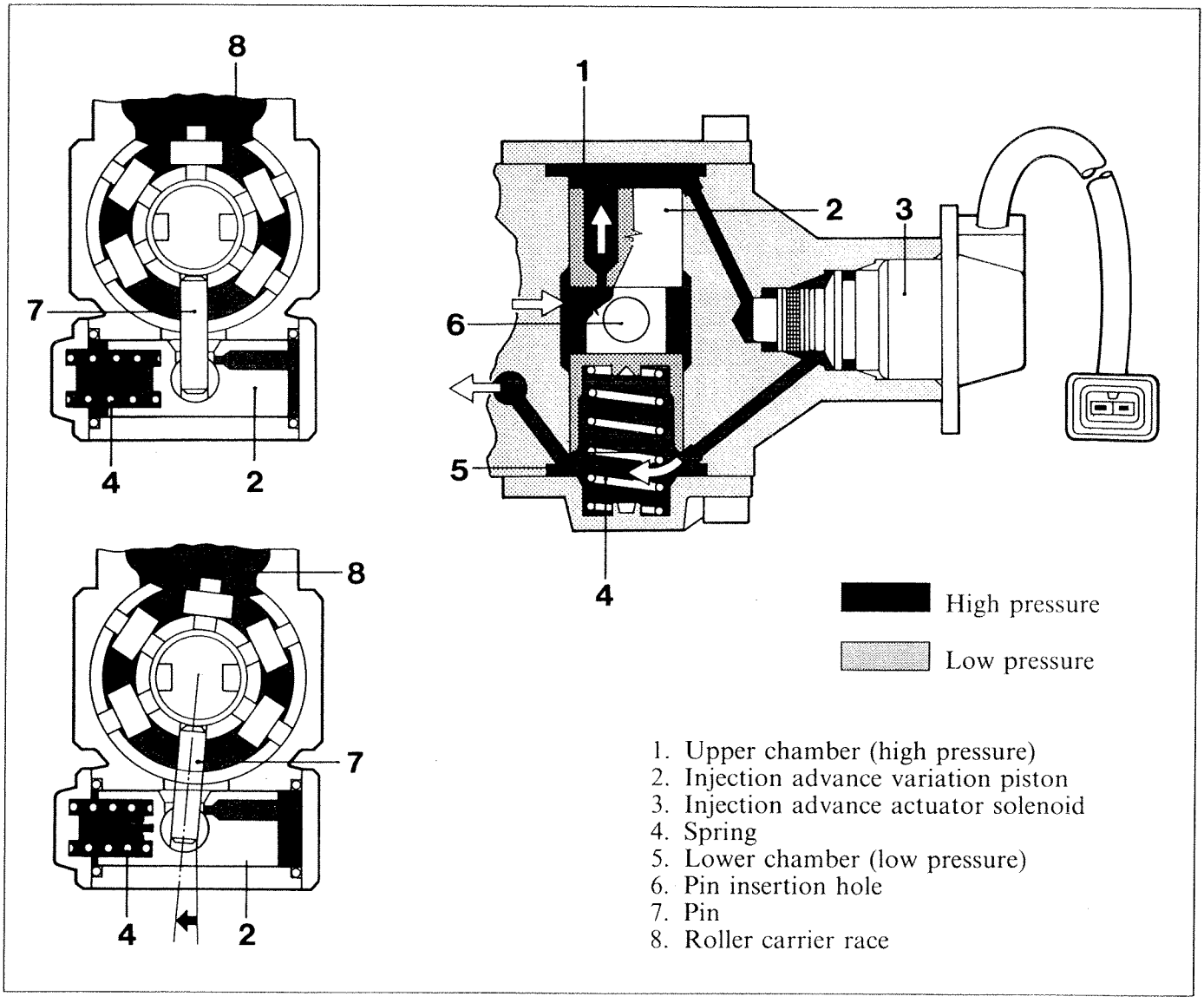

P3U09AX01

Copyright Fiat Auto

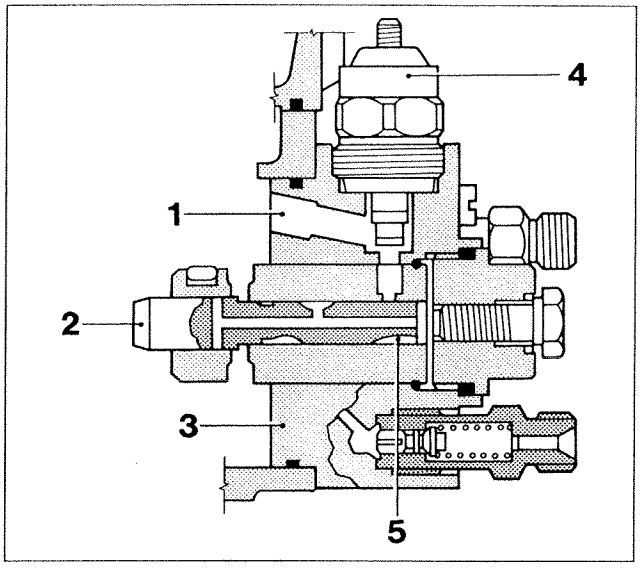

P3U10AX01

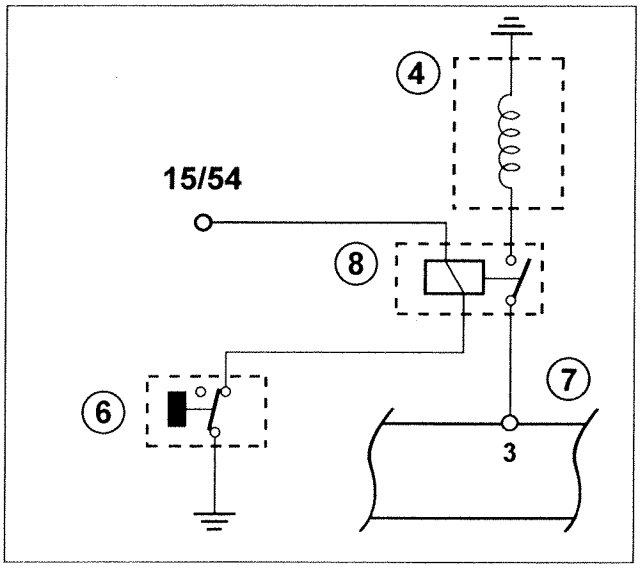

P3U10AX02

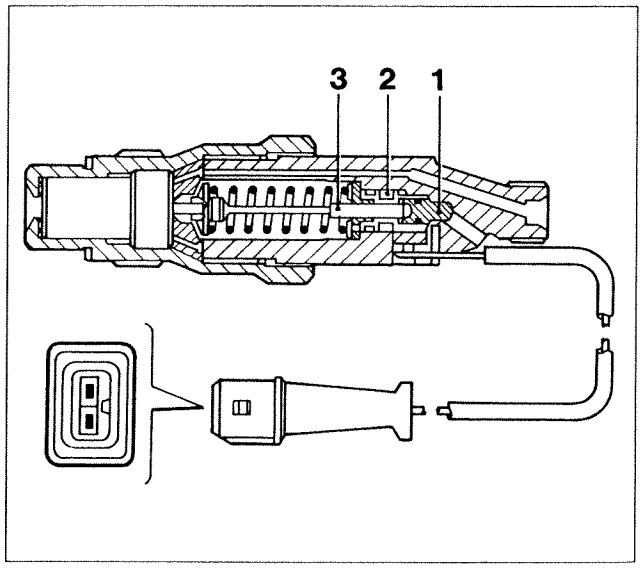

P3U10AX03

Engine stop solenoid

Solenoid (4) stops the engine when current is cut off by blocking the hole connecting the pump interior and the pump element compartment. This in turn cuts off fuel flow to the injectors. Solenoid (4) may cut in either by turning key to STOP or following activation of inertia switch (6), which cuts off electrical power to the solenoid from the ECU (7) via N.A. relay (8).

1. Outlet hole
2. Distributor piston
3. Distributor head
4. Solenoid
5. High pressure chamber
6. Inertia switch
7. ECU
8. Relay

Controlled injector

The controlled injector informs the injection control unit on actual injection advance setting (start of injection phase, or beginning of needle valve movement). On the basis of this signal, the control unit corrects the advance set by the injection actuator until the theoretical value is achieved.

The injector is fitted to cylinder 1 and equipped with a device for identifying the exact moment injection begins in addition to wiring to relay the signal and inform the injection control unit.

The injector contains coil (2), needle valve (3) and regulation pin (1). The coil is electrically powered and generates a magnetic flow that affects the needle valve (3). When the valve begins to open, the nozzle for fuel injection, magnetic flow in coil (2) alters. The control unit identifies this point as the injection start instant and uses this as a basis for its advance regulation strategy.

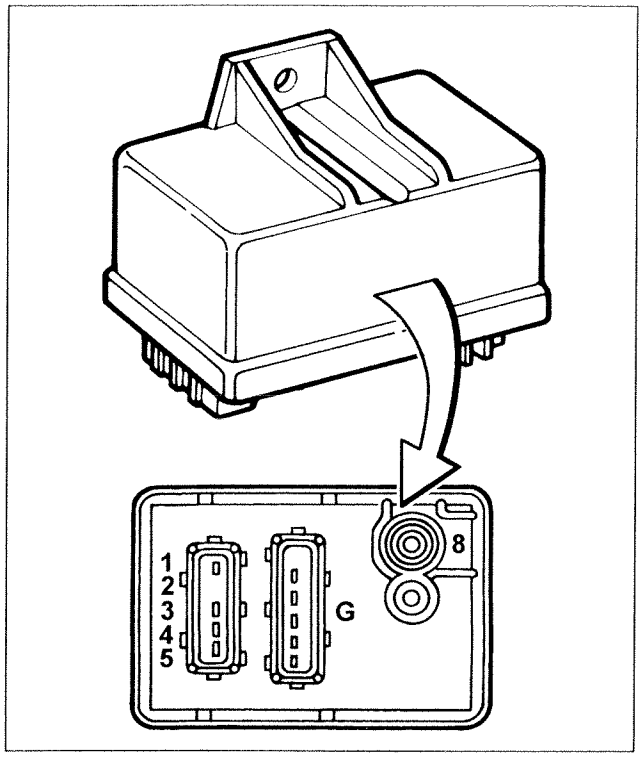

P3U11AX01

Preheating control unit

The glow plugs are controlled by a preheating control unit controlled directly by the injection control unit.
This contains a "smart" relay that sends responses ("feedback") to the electronic injection control unit, which is thus kept up to date on faults in the preheating control unit or short circuits to earth in the glow plugs.

The figure shows connectors on the base of the control unit and their associated pin-outs.

Connections

1. Vehicle earth
3. Ignition switch (+15)
4. Pump electronic control unit - pin 8 (pre--postheating activation)
5. Pump electronic control unit - pin 41 (diagnosis)
8. Battery positive

G. Glow plugs

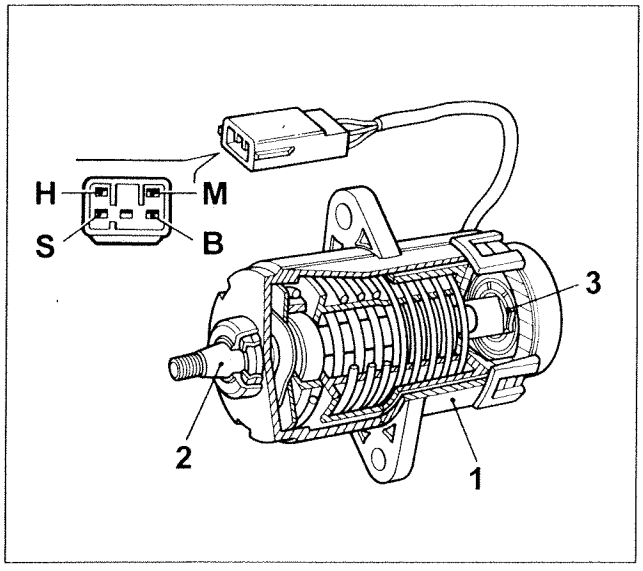

P3U11AX02

Accelerator pedal potentiometer

Accelerator pedal position is converted to an electrical voltage signal from the potentiometer connected to the pedal, and sent to the ECU via an electrical connection. The signal is then processed and this data, together with information on engine rpm, is used to activate the injection flow flow regulation actuator.

The sensor consists of a case (1), fastened to the pedal unit by a flange. Shaft (2) connected to potentiometer (3) is fitted in an axial position on the flange.
A coil spring on the shaft ensures the correct resistance to pressure, while a second spring ensures return upon release.
An internal contact provides the control unit with an idle speed signal. This contact opens if rotation exceeds 9° during acceleration.

Copyright Fiat Auto

Air flow meter (debimeter)

This device measures the amount of air taken up by the engine and converts the value to an electrical signal, which is then relayed to the control unit.
This signal is used to:
- calculate the amount of fuel to be injected in order to achieve the highest possible fuel flow compatible with a smoke-free exhaust;
- control the amount of exhaust gas recirculated through the EGR valve.

Calculated intake air quantity is used to carry out an indirect measurement of the quantity of exhaust gas re-circulated through the EGR valve.
If intake of a certain amount of air (Qam) is required for a given rpm, and the level sent by debimeter (Qar) is lower, the difference (Qgr) corresponds to the quantity of gas recirculated.

$$Qam \times Qar = Qgr$$

Qam = Theoretical air quantity in memory
Qar = Actual air quantity
Qgr = Recirculated gas quantity

The quantity of air taken up by the engine exercises a thrust on floating plate (1) and this takes up a very specific angular position proportional to the pressure exercised by the incoming air flow (quantity of air taken up by the engine) and thrust of counter spring (2).
This angular position is converted into a voltage signal by potentiometer (3) connected rigidly to floating plate spindle.
Compensation plate (4) is coupled to a floating plate with the same effective surface area. This compensates for pressure fluctations due to alternating intake phases for the different cylinders because these act on both surfaces of the floating plate. In this way, forces arising are cancelled out and do not affect the measurement.

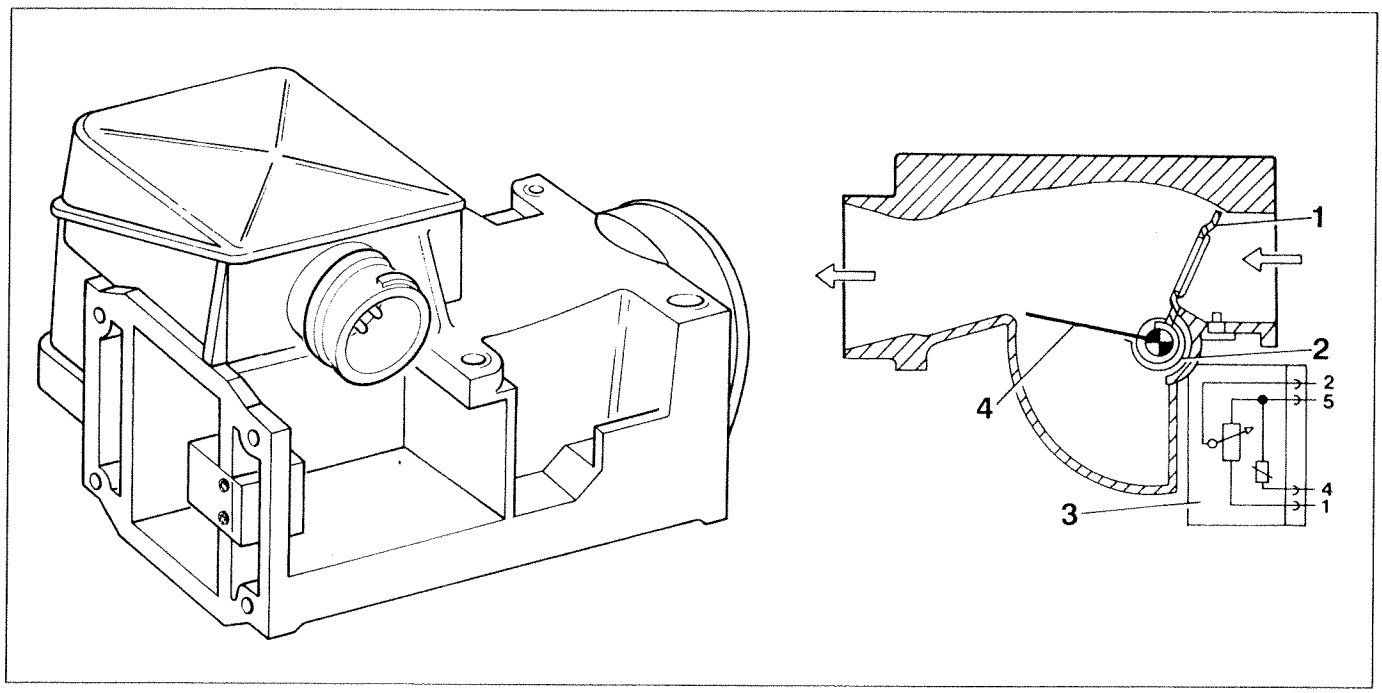

P3U12AX01

The air flow meter houses a temperature sensor with an NTC resistance. A signal from this is used by the ECU to compute air density and hence specific weight. This signal allows the control unit to compensate for injection pump regulation when the air/fuel weight ratio alters in order to obtain full combustion at all speeds.

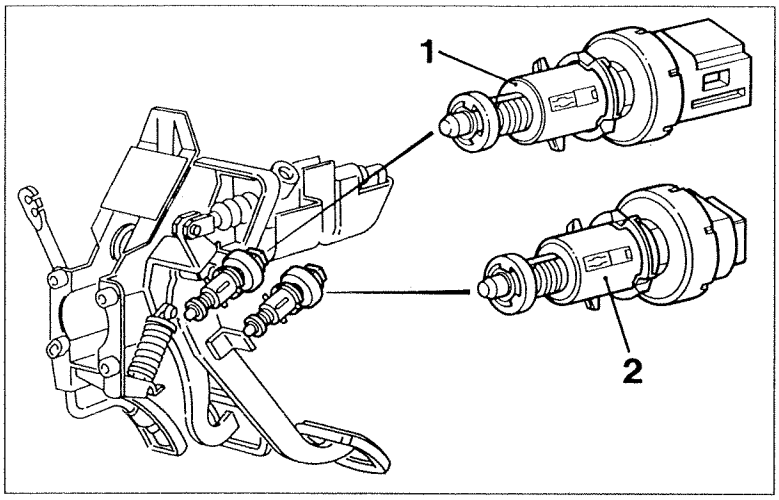

P3U13AX01

Brake pedal sensor (1)

A switch on the brake pedal controls the vehicle brake lights. The same switch sends a signal to pin 26 of the injection control unit.
The injection control unit uses the brake depressed signal to:
- realise that vehicle is decelerating;
- check plausibility of accelerator potentiometer signal.

Clutch pedal sensor (2)

An N.O. (Normally Open) switch on the clutch pedal is connected to terminal 28 of the control unit and locked power supply (15/54).
To check that switch is N.O. (Normally Open), keep the clutch pedal depressed. The clutch pedal signal is used by the ECU to identify gear engaged and monitor gear changes.

Engine rpm sensor and phonic wheel

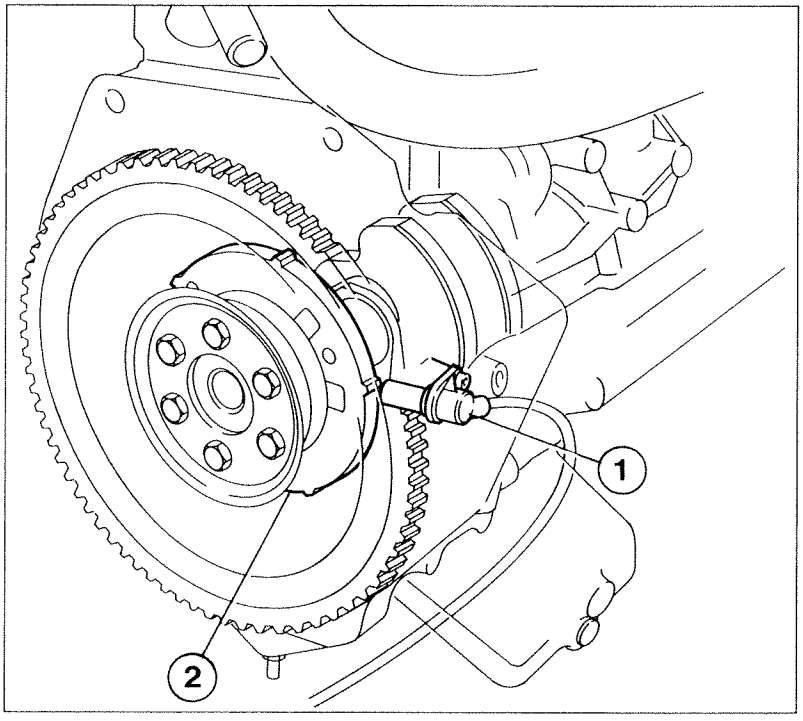

P3U13AX02

The engine rpm sensor is fitted in the engine block and faces a phonic wheel, located inside the engine block, fastened to the crankshaft.
Five reference dowels around the outside edge of the sheet steel phonic wheel are spaced 72° apart.

When these dowels or teeth pass beneath the sensor, the gap change brings about an alteration in the magnetic flow which in turn sets up a current in the sensor spool coils.
This signal is sent to pin 47 of the ECU where it is used to record engine rpm.

Copyright Fiat Auto

Coolant temperature sensor

Engine coolant temperature is measured by a sensor which consists of an NTC resistance. This alters its resistance in inverse proportion to temperature, as shown in the graph.

The ECU measures the voltage change proportional to the intensity of current flowing into the sensor through terminal 53.
The sensor must not be screwed in tighter than a torque of 15 Nm.

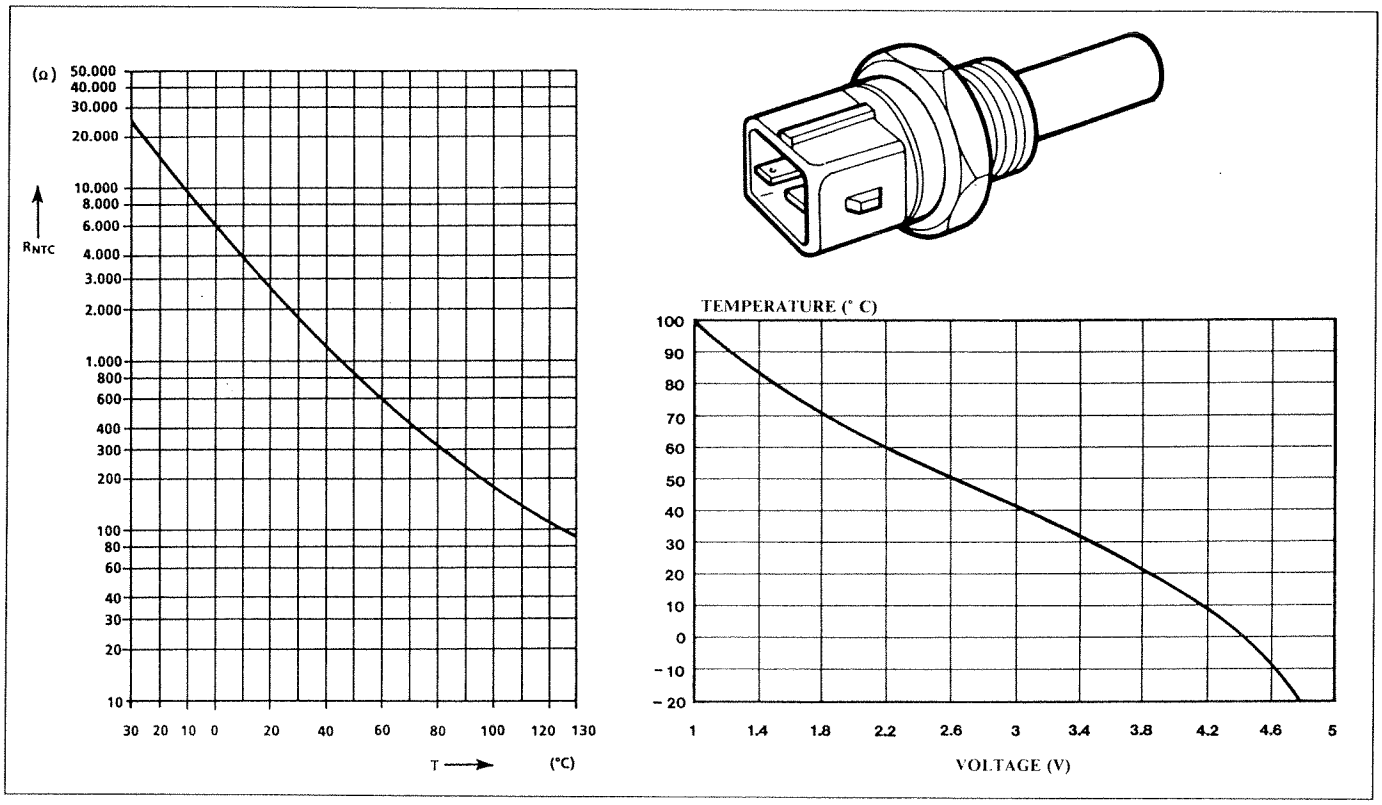

P3U14AX01

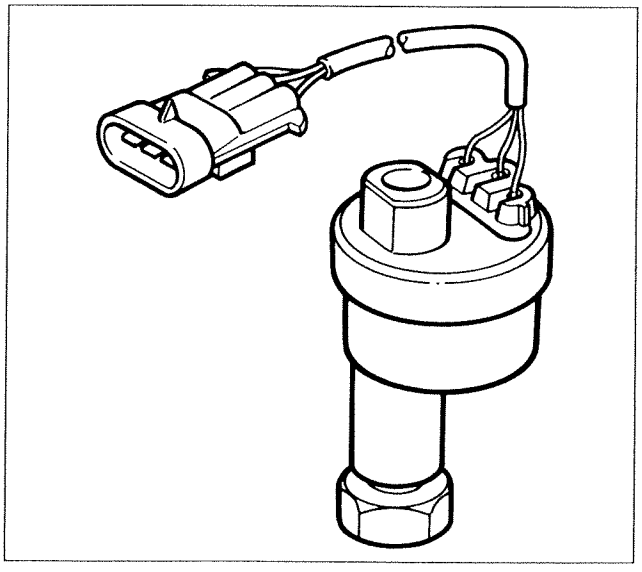

P3U14AX02

Speed sensor

The speedometer sensor fitted on the gearbox sends a signal to the instrument panel in order to operate the speedometer and also sends a signal to terminal 29 of the injection control unit.
The speedometer sensor provides the ECU with information on vehicle speed and, together with the clutch pedal sensor, the gear currently engaged;

E.G.R. system

The system consists of a PIERBURG E.G.R. valve (1) and a BORG WARNER vacuum modulator solenoid (2).
The ECU governs the BORG WARNER modulator solenoid on the basis of fuel flow, engine rpm, intake air temperature and coolant temperature (up to 60° C). This modulated vacuum controls the E.G.R. valve, which in turn moves a plunger to regulate the flow of burnt gas from the exhaust manifold to the intake manifold.
The ECU is kept constantly informed about recirculated gas quantity using data from the flow meter.

The atmospheric pressure signal (via a sensor inside the injection control unit) is important for control of the BORG WARNER modulator valve because it recognises when the vehicle is being driven at altitude so that the recirculated gas quantity can be reduced to prevent the engine from smoking.

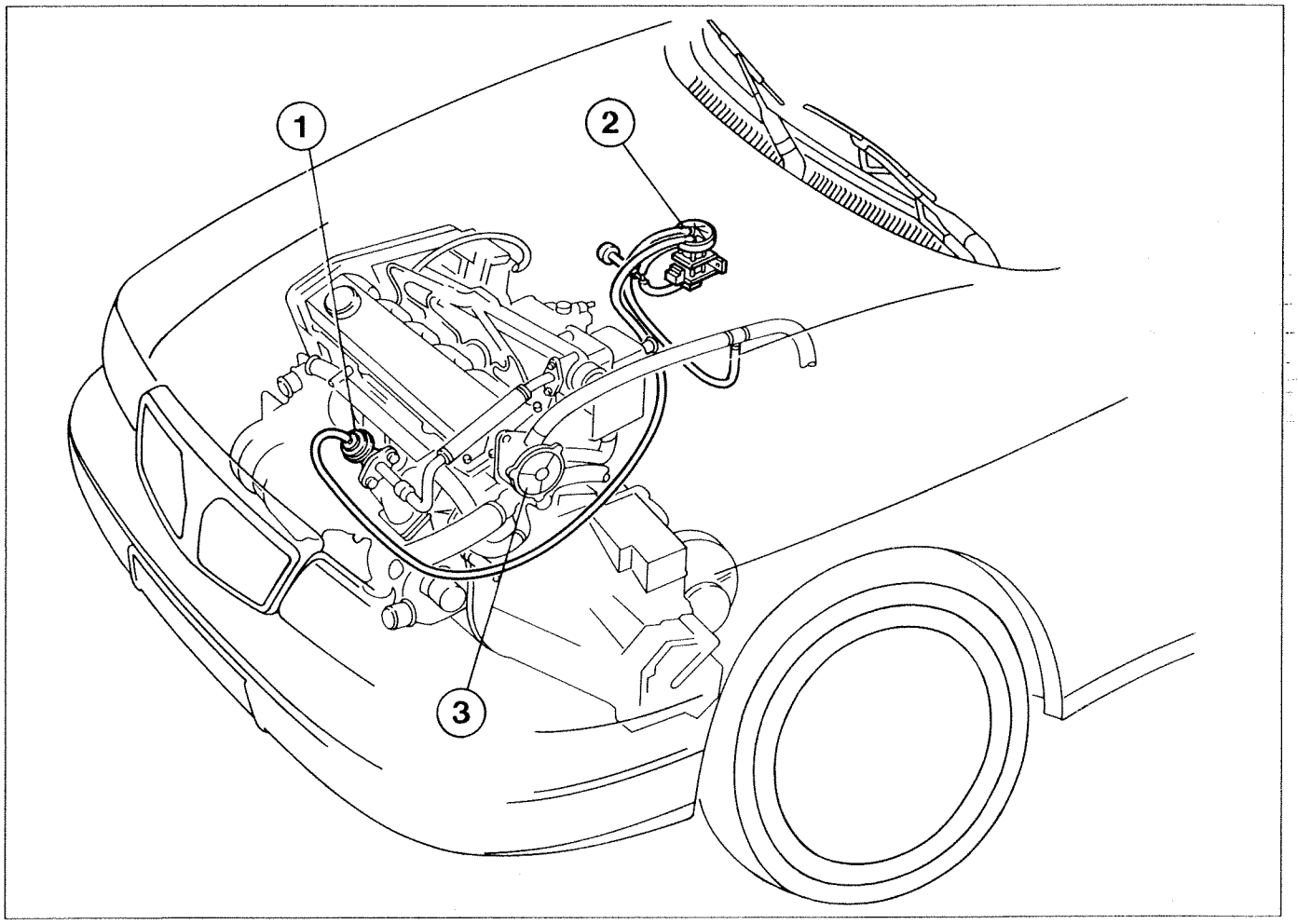

P3U15AX01

BORG WARNER vacuum modulator solenoid

BORG WARNER solenoid (2) controls the E.G.R. valve (1) by modulating output pressure of vacuum pump (3) according to atmospheric pressure.
The injection control unit controls the BORG WARNER solenoid by means of a square wave signal.

Copyright Fiat Auto

Operation

Vacuum reaches chamber E from duct F (case I), because the force of spring (6) acts on mobile unit (4) and shunt valve (5) opens up a passage.
The vacuum then flows through compensation port D to chamber B and surfaces of disc plunger (3).

Once the forces acting on disc (3) are balanced, the atmospheric pressure in duct A enters chamber B to move the mobile unit downward (case II). The plunger of valve (5) therefore closes duct F and brings chamber E into communication with chamber C at atmospheric pressure to reduce the vacuum level in duct E.

The reduced vacuum level or increased absolute pressure in chamber E causes mobile unit (4) to rise (case I) to close passage C. Valve (5) therefore takes up an ideal position (E in communication with F) for the cycle to be repeated.

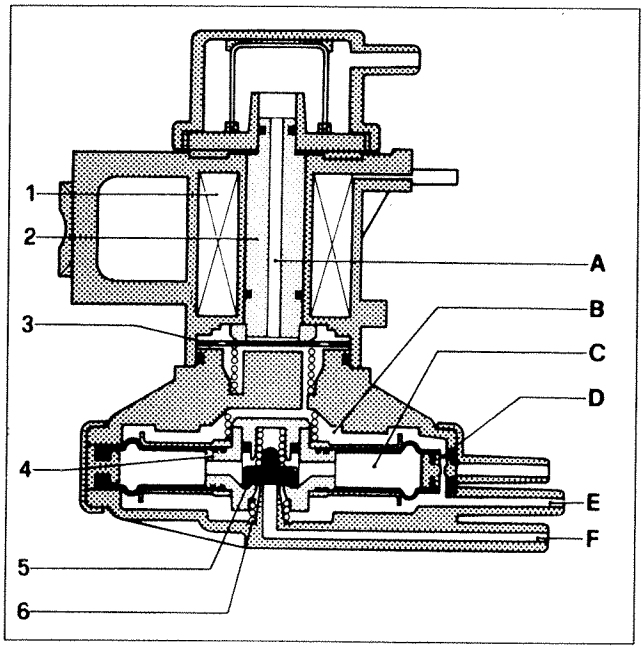

P3U16AX01

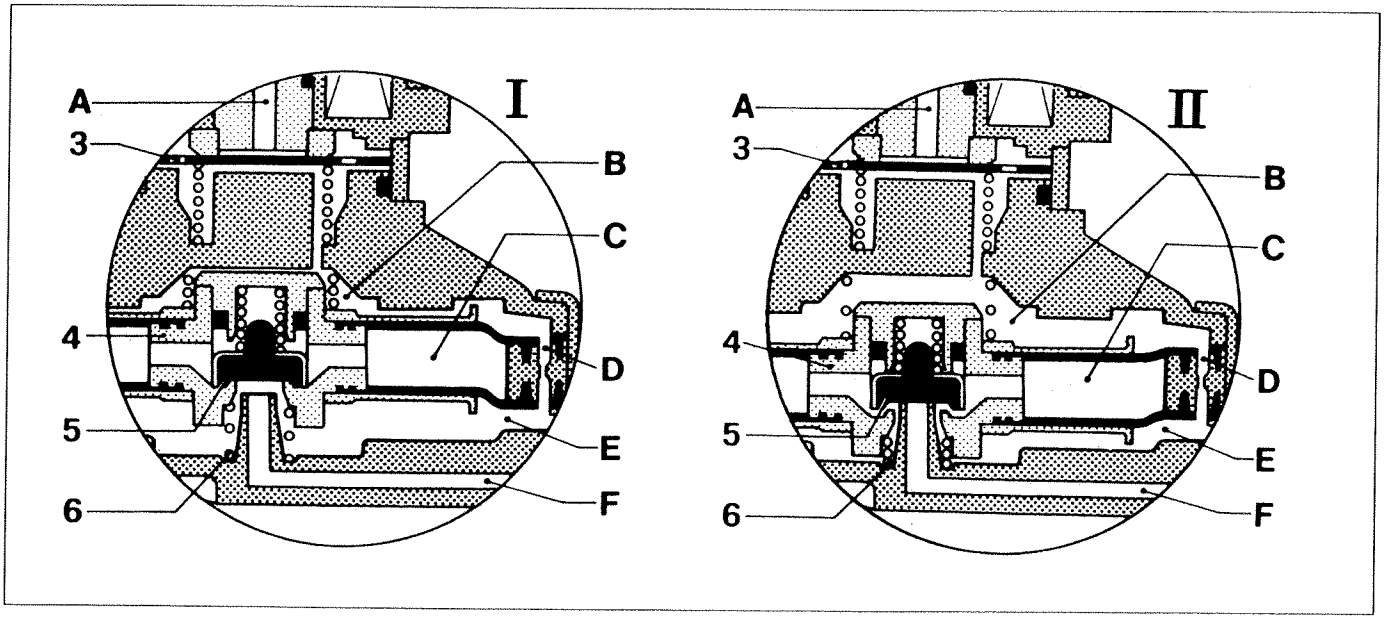

P3U16AX02

Oxidising catalytic converter

The oxidising catalytic converter is a simple and effective post-treatment device used to oxidise CO, HC and particulate, which are converted to carbon dioxide CO_2 and water vapour H_2O.
The catalytic converter used is oval in shape, with a corrugated, herringbone steel mount impregnated with Palladium and a silicon alloy. Its volumetric capacity is 1.4 litres and its density is 35 cells per square centimetre.
Exhaust gases flowing through the chambers heat the catalytic converter to trigger conversion of pollutants to inert compounds.
Individual pollutants are reduced with the following efficiency:
- 50% for CO;
- 50% for HC;
- 30% for particulate, which is a group of combustion residues (partially condensed at a temperature less than 52°C) made up of:
  1. carbon (ash); 2. saturated hydrocarbons; 3. aromatic hydrocarbons; 4. metals; 5. water; 6. sulphur compounds.

The catalytic converter treats the saturated and aromatic hydrocarbons (2-3) while the remaining elements are eliminated through the exhaust.
From 350 °C, the fuel sulphur content is oxidised to sulphur dioxide SO_2 and sulphur trioxide SO_3. When these come into contact with water vapour, they form the sulphurous and sulphuric acids responsible for acid rain.
When fuel sulphur content is reduced from its present 0.3% to 0.05%, all Diesel engine exhaust emissions will be fully converted.
The converter service temperature window within which the highest conversion rate compatible with minimum sulphur oxidation occurs is between 200 °C and 350 °C.
If the catalytic converter is of the correct size, temperature can be controlled and maintained within the optimal service window, limiting oxidation of sulphur compounds.
The catalytic converter also eliminates the characteristic exhaust gas smell.

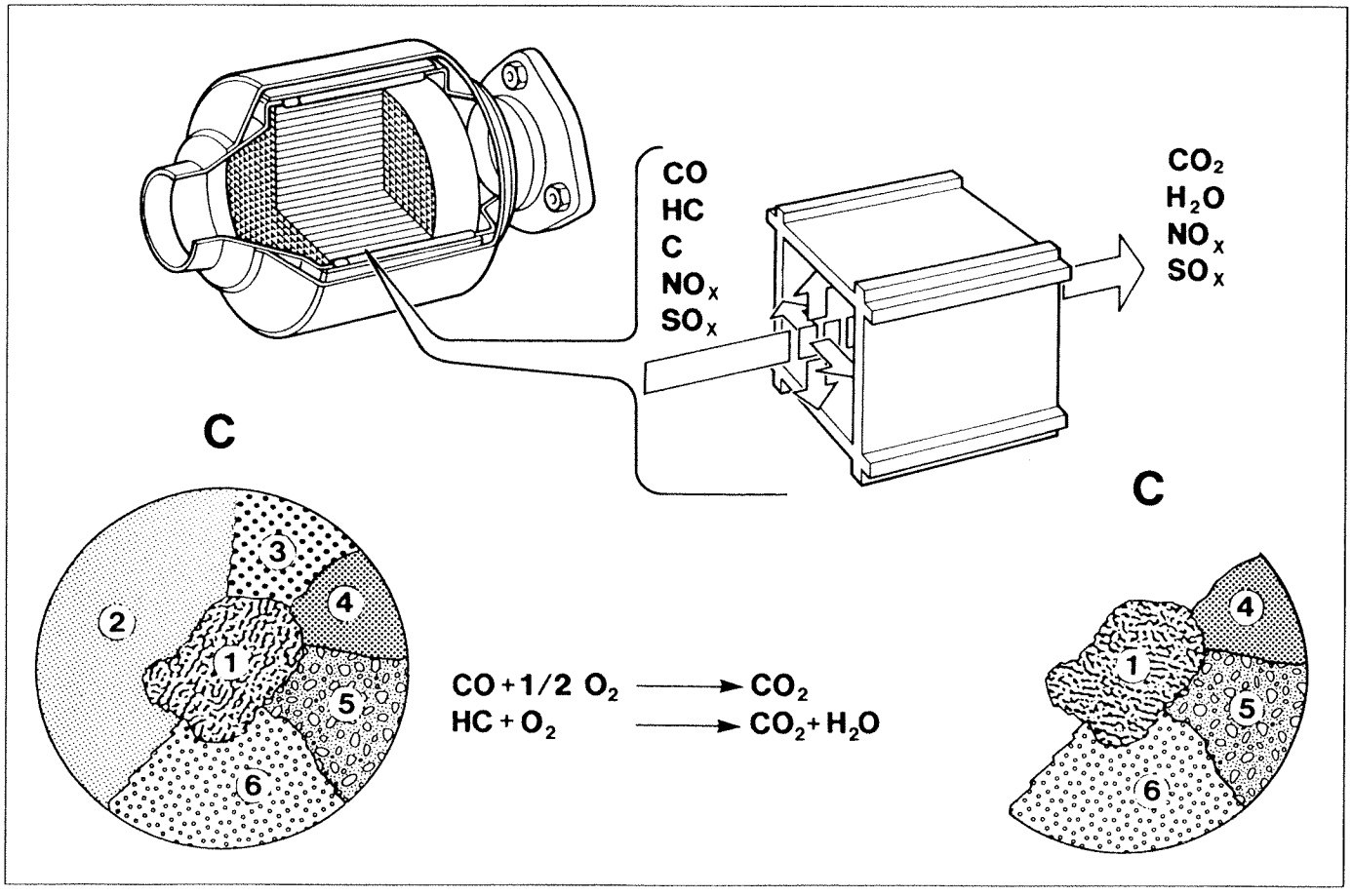

P3U17AX01

CONTROL UNIT PIN-OUTS

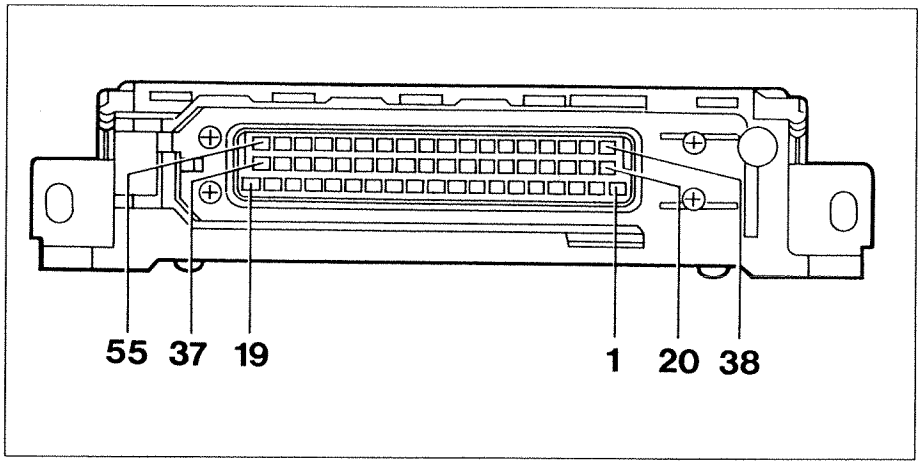

P3U20AX01

1. Fuel flow actuator
2. Fuel flow actuator
3. Engine stop solenoid
4. Infocenter
5. Controlled injector
6. E.G.R. solenoid
7. N.C.
8. Glow plug control unit activation
9. A.C. compressor
10. Injection advance actuator
11. Glow plug activation warning light
12. Earth for controlled injector
13. Common sensor earth
14. Cursor position sensor
15. Main relay
16. Control unit supply via relay
17. Control unit supply via relay
18. Earth
19. Earth
20. N.C.
21. Cursor position sensor (reference winding)
22. N.C.
23. N.C.
24. N.C.
25. Idle switch on accelerator pedal
26. Brake light switch
27. N.C.
28. Clutch pedal shunt
29. Vehicle speed signal
30. N.C.
31. N.C.
32. N.C
33. 5V accelerator pedal position sensor
34. 5V debimeter
35. Fuel temperature signal
36. N.C.
37. Accelerator pedal position signal
38. Debimeter signal
39. Cursor position sensor signal
40. N.C.
41. Glow plug operation signal
42. K line and immobilizer
43. N.C.
44. Signals required for compressor activation
45. N.C.
46. N.C.
47. Engine rpm sensor
48. N.C.
49. N.C.
50. Rev counter signal
51. N.C.
52. Air temperature signal
53. Coolant temperature signal
54. N.C.
55. + ignition key

Wiring diagram

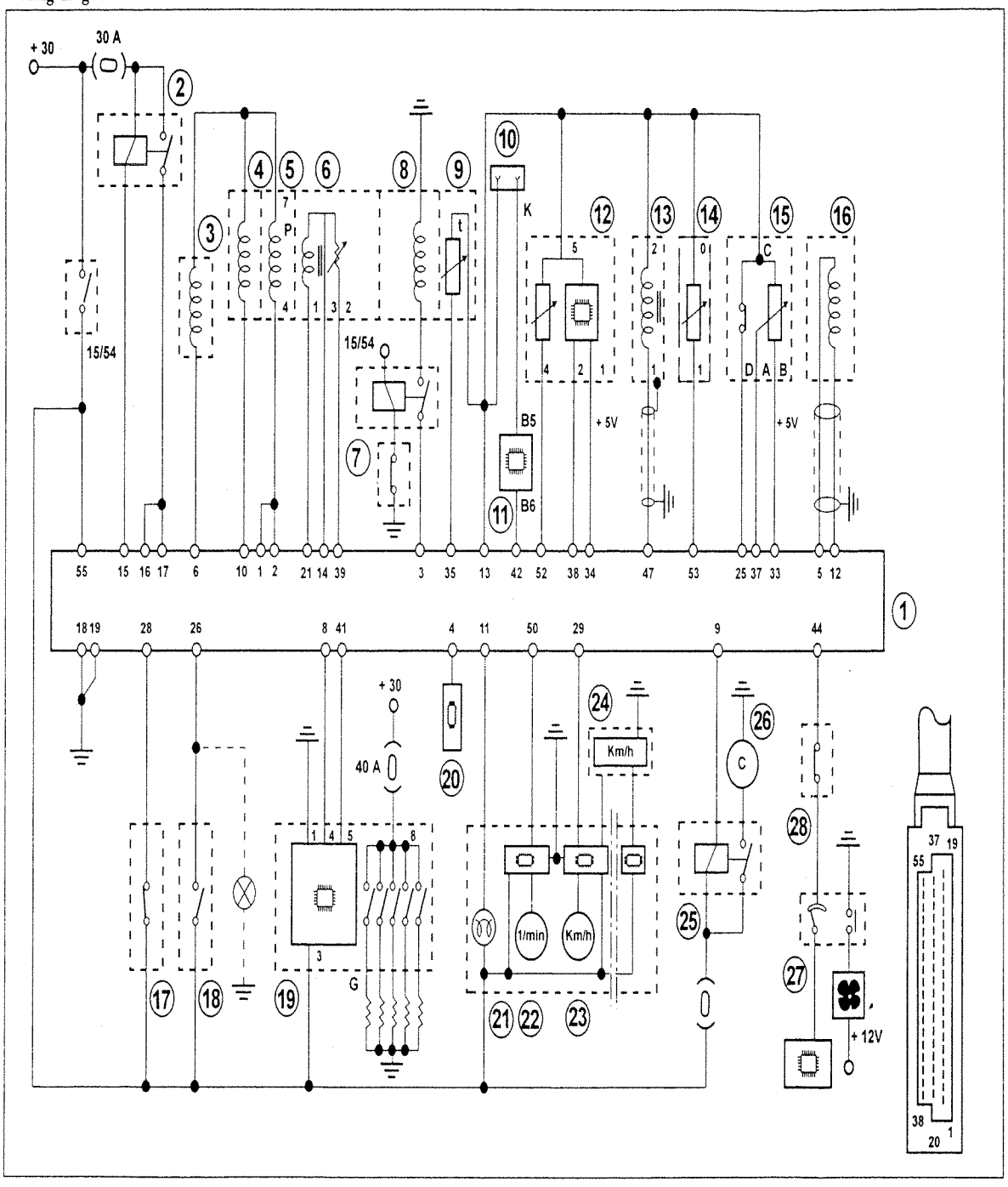

Key:

1. Electronic control unit
2. System protection relay
3. Borg-Warner modulator solenoid
4. Injection advance actuator
5. Fuel quantity actuator
6. Fuel quantity actuator position control
7. Inertia switch
8. Engine stop solenoid
9. Fuel temperature sensor
10. Test point for Fiat/Lancia Tester
11. Immobilizer
12. Debimeter with air temperature sensor
13. Rpm sensor
14. Water temperature sensor
15. Accelerator pedal potentiometer with idle switch
16. Controlled injector
17. Clutch pedal switch
18. Brake pedal switch
19. Preheating electronic control unit
20. Infocenter
21. Glow plug warning light
22. Rev counter
23. Speedometer
24. Speedometer sensor
25. Air condition compressor control relay
26. Air conditioner compressor
27. Three stage pressure switch
28. Anti-frost thermostat

Air conditioner

The injection electronic control unit manages the electromagnetic coupling of the air conditioning system compressor (3) in accordance with a strategy designed to avoid service conditions that would impair engine performance.
When the compressor is activated, the injection control unit increases idling injection pump output by means of the fuel quantity actuator in order to adjust the engine to the higher power requirement.

The injection control unit cuts off the supply to the compressor for about 6 seconds under the following conditions:
- take-off;
- acceleration;
- engine not warmed up

This power cut continues even if one of these conditions disappears before the 6 seconds have elapsed.
If the engine coolant overheats, the injection control unit cuts off power to the compressor until the coolant is restored to a temperature within the specified service range.

Power to the compressor is cut permanently if one of the injection system faults listed below occurs:

- speed signal fault;
- accelerator potentiometer signal fault;
- fault in one of the 2 microprocessors in the infocenter control unit, located on the central console, reaching terminal 44 of injection control unit (1) through three-stage pressure switch (2A). Operating with a slight delay, to ensure idle speed adjusts to the new power requirement, the injection control unit (1) earths terminal 9; at this point, relay (5) closes its contacts and one positive supplies electromagnetic coupling of compressor (3).

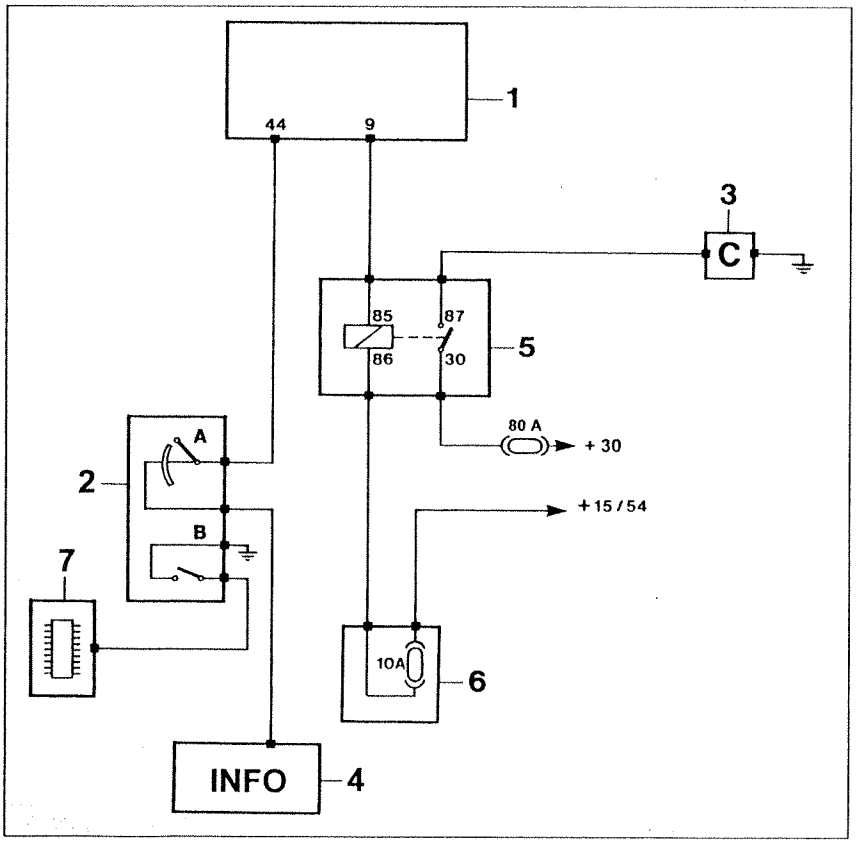

P3U25AX02

1. Bosch electronic control unit
2. A-Three stage pressure switch
   B-Pressure switch
3. Compressor electromagnetic coupling
4. Infocenter control unit
5. Relay
6. Fuse
7. Ventilation fan control circuit

ARRANGEMENT OF COMPONENTS IN ENGINE BAY

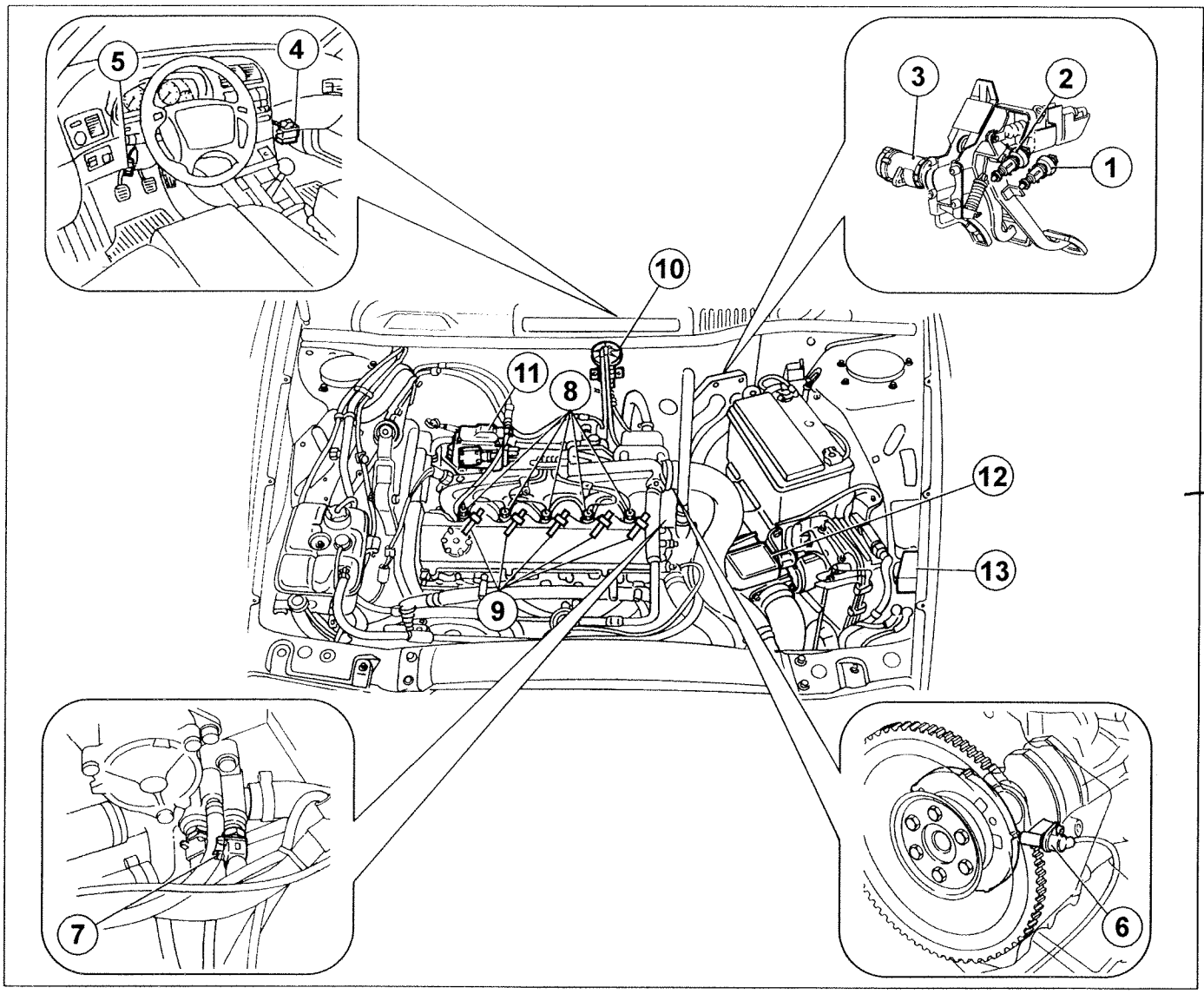

P3U21AX01

Key:

1. Clutch pedal switch
2. Brake pedal switch
3. Accelerator potentiometer
4. Electronic control unit
5. Tester point
6. Rpm sensor
7. Coolant temperature sensor
8. Injectors
9. Heater plugs
10. Borg Warner modulator solenoid
11. Bosch injection pump
12. Debimeter
13. Glow plug control unit

Copyright Fiat Auto

CHECKING, REPLACING AND ADJUSTING ACCELERATOR PEDAL POTENTIOMETER

To check accelerator pedal potentiometer, disconnect wiring connector and use an ohmmeter to check the following resistances:
- between lead H (grey and lead M (brown) 1kΩ; during acceleration, the ohmmeter will indicate an open circuit because idle contact opens
- between lead H and lead S (pink) 2kΩ; during acceleratoin, the ohmmeter will indicate an open circuit because idle contact opens
- between lead S and lead M 1kΩ
- between lead B (white) and lead S, check resistance varies continually from 1-2kΩ
- between lead B and lead M, check that resistance varies continuously from 1-2kΩ

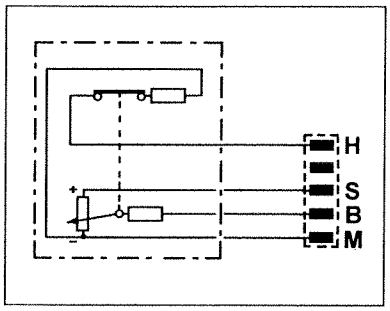

P3U22AX01

If the accelerator pedal position sensor is changed, the pedal assembly must be removed. This operation is necessary to permit potentiometer adjustment.
The operation is carried out in two stages:

Stage 1

Fitting control lever to potentiometer

Fit lever to accelerator potentiometer control shaft in the correct position (see figure)
Lever angle with regard to centre-line of sensor fitting holes must be 10°, positioned in opposite direction to direction in which lead emerges from sensor base.

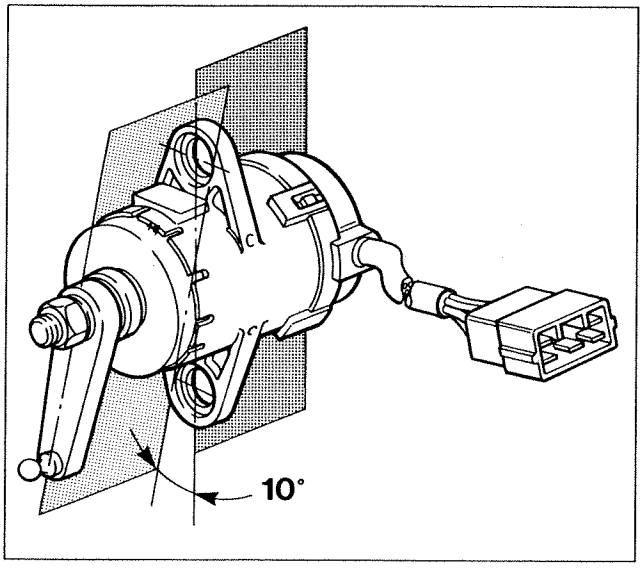

P3U22AX02

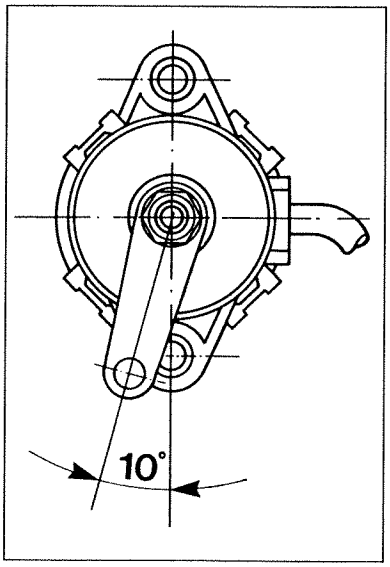

P3U22AX03

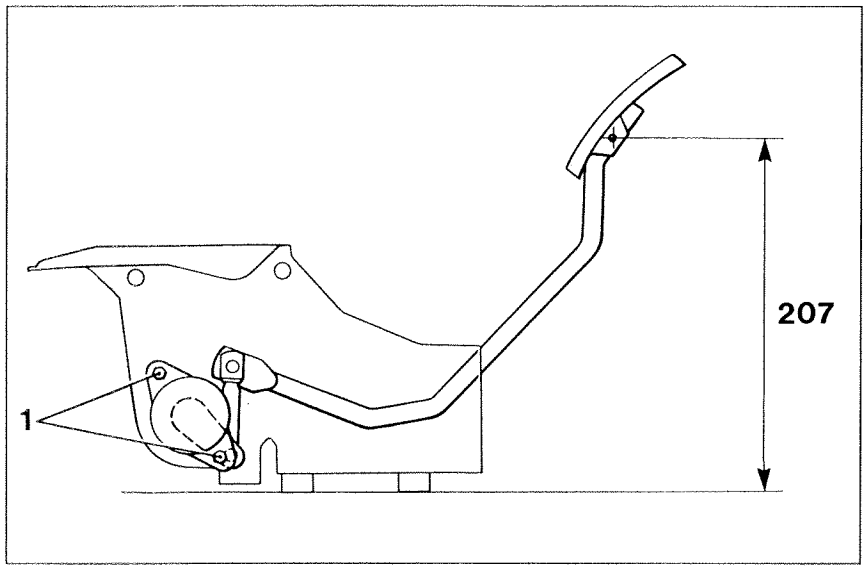

P3U23AX01

stage 2

Fitting potentiometer to pedal assembly

Fit potentiometer in its seat, position retaining screws (1) and connect linkage.

Rest assembly on a reference plane as illustrated in the figure and measure 207 millimetres from the plane to the rivet connecting pedal to lever.
With the pedal in this position, tighten screws (1) retaining accelerator potentiometer.

ADJUSTING PUMP PHASE AND TIMING

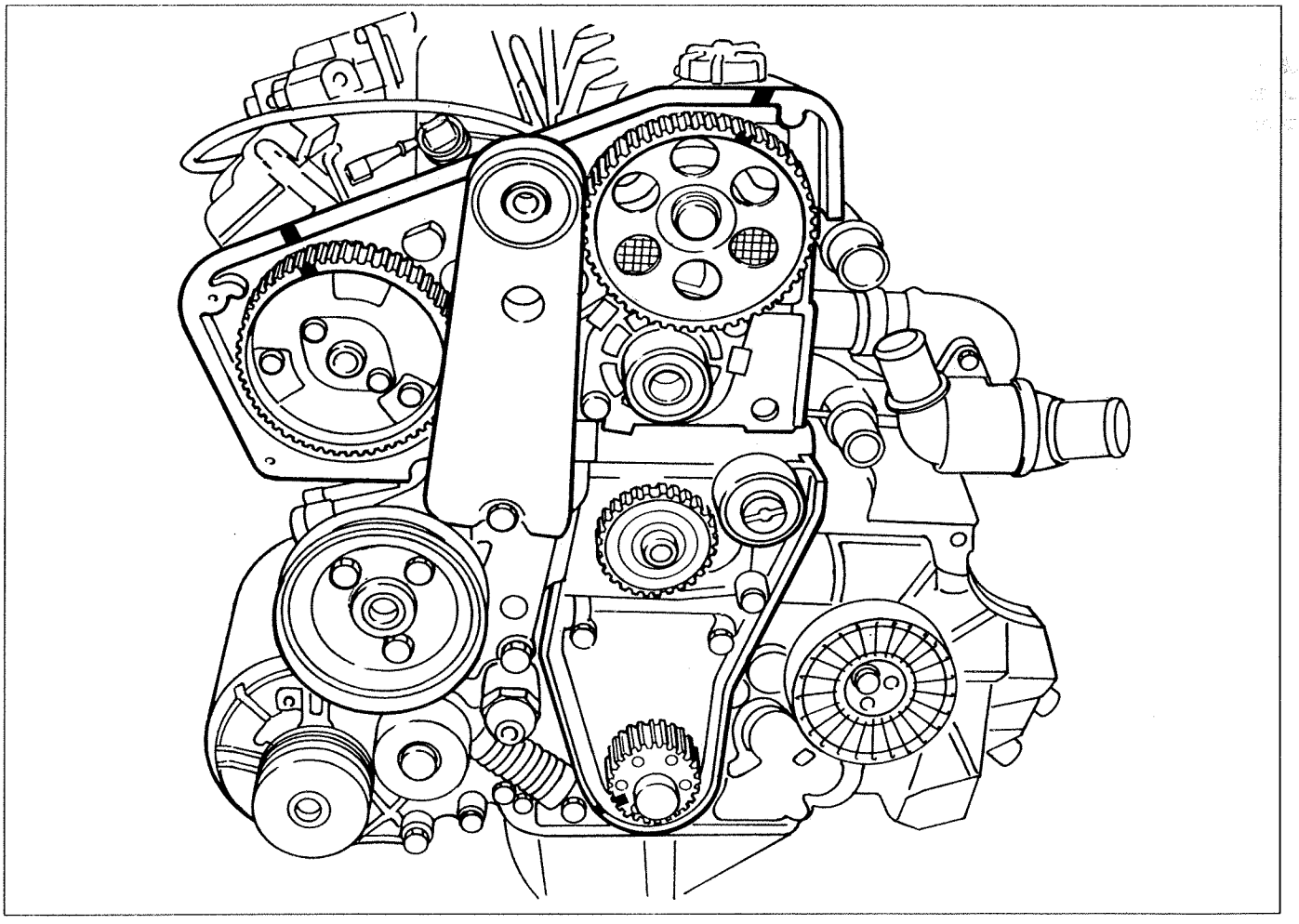

P3U23AX02

Checking exact timing adjustment; references on pulleys and engine must be as shown in the figure.

Copyright Fiat Auto

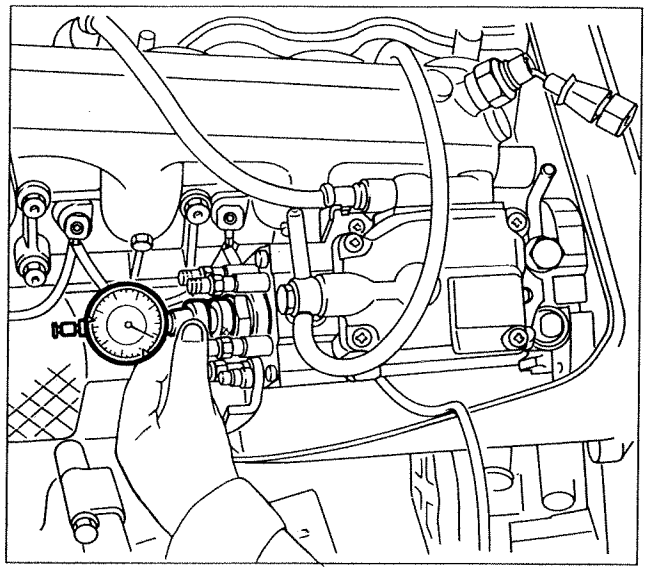

P3U24AX01

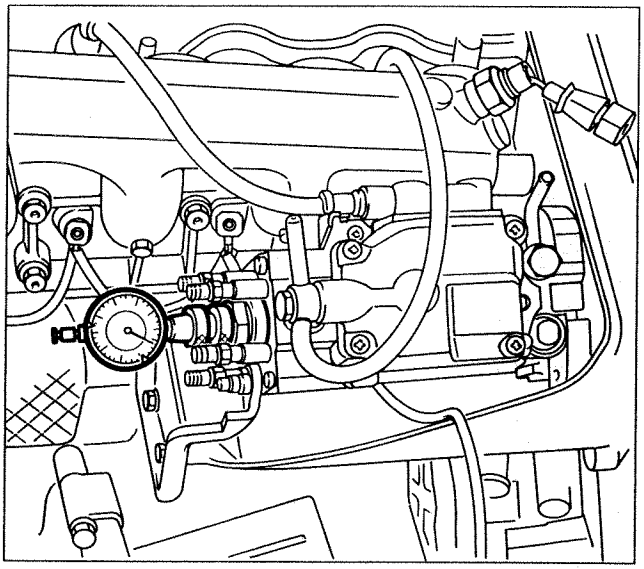

P3U24AX02

- Remove the cap on the pump cover and tighten tool 1865090000 in place, with gauge probe in contact with distributor piston crown.

- Turn the engine against its direction of rotation until pump distributor piston reaches B.D.C. indicated by the guage. Zero the gauge in this position.

- Turn the engine in its direction of rotation until engine piston n°1 is at T.D.C. Pump distributor piston must have travelled through 0.76 mm under these conditions.

- If travel is not 0.76 mm, turn pump case in its slot until specified value can be read off gauge. Tighten screws fastening pump to mount to a torque of 2.5 da Nm.

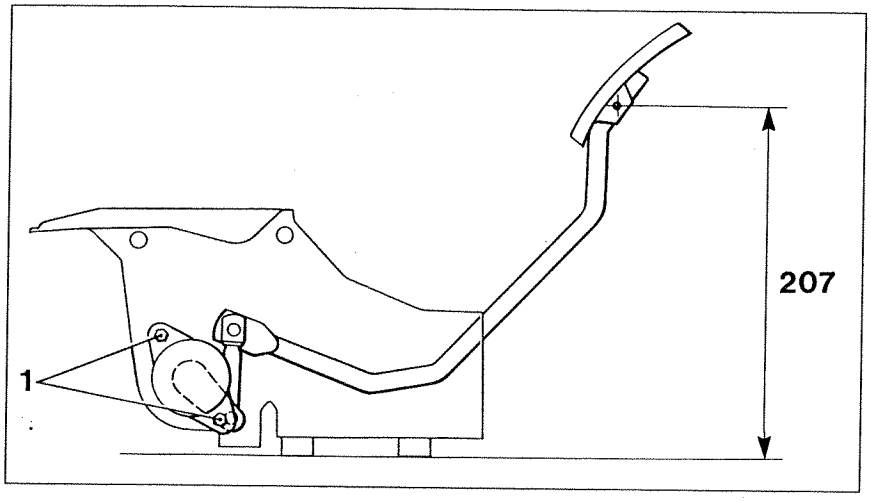

P3U23AX01

stage 2

Fitting potentiometer to pedal assembly

Fit potentiometer in its seat, position retaining screws (1) and connect linkage.

Rest assembly on a reference plane as shown in the figure and measure 207 millimetres from the plane to the rivet connecting pedal to lever.

With the pedal in this position, tighten screws (1) retaining accelerator potentiometer.

ADJUSTING INJECTION PUMP TIMING

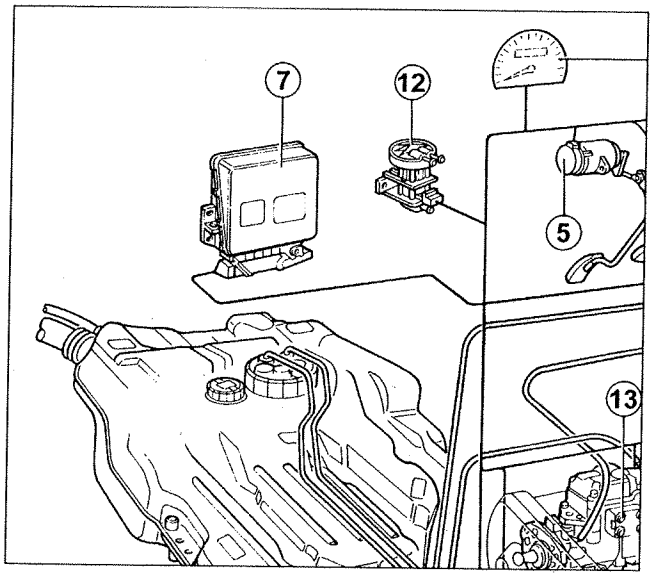

P3U24AX01

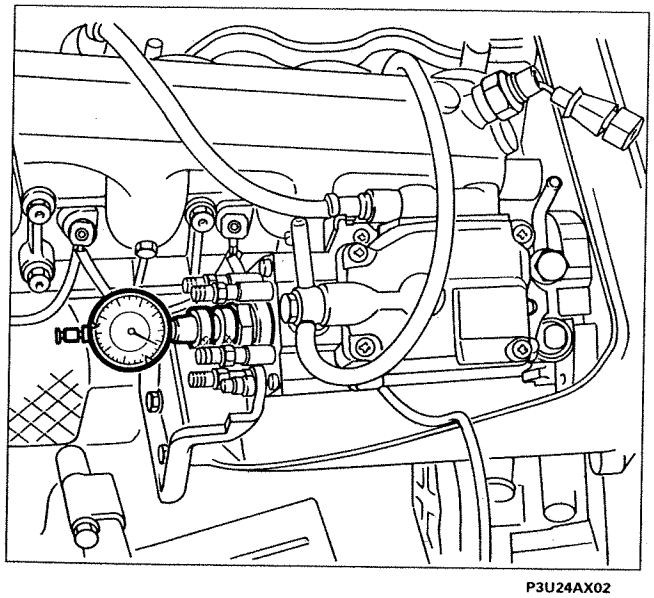

P3U24AX02

- Remove the plug on the pump cover and tighten tool 186509000 with dial guage so that the probe is in contact with the distributor piston crown
- Turn the engine against its direction of rotation until the pump distributor piston is set to B.D.C. as indicated on the dial gauge. Now reset the dial gauge.
- Turn the engine in its direction of rotation until engine piston no. 1 is set to T.D.C. In this position, the pump distributor piston must have moved through a stroke of 0.70 mm.
- If stroke is not 0.70 mm, turn the pump case in its slot until the gauge shows the specified reading. Then tighten the mount retaining bolts to a torque of 2.5 da Nm.

Copyright Fiat Auto

INTRODUCTION

The 1997 update essentially involves replacement of the vane-type intake air flow meter (debimeter) with a hot film debimeter. This sensor is highly accurate and is more reliable than the previous component because it has no moving parts. The intake air temperature sensor is no longer built into the debimeter but fitted separately, immediately downstream from the debimeter.

This section describes features of fuel systems fitted with the new debimeter on the 2387TD version which differ from the previous version. For further information, see descriptions on previous pages.

GENERAL FUEL SYSTEM DIAGRAM

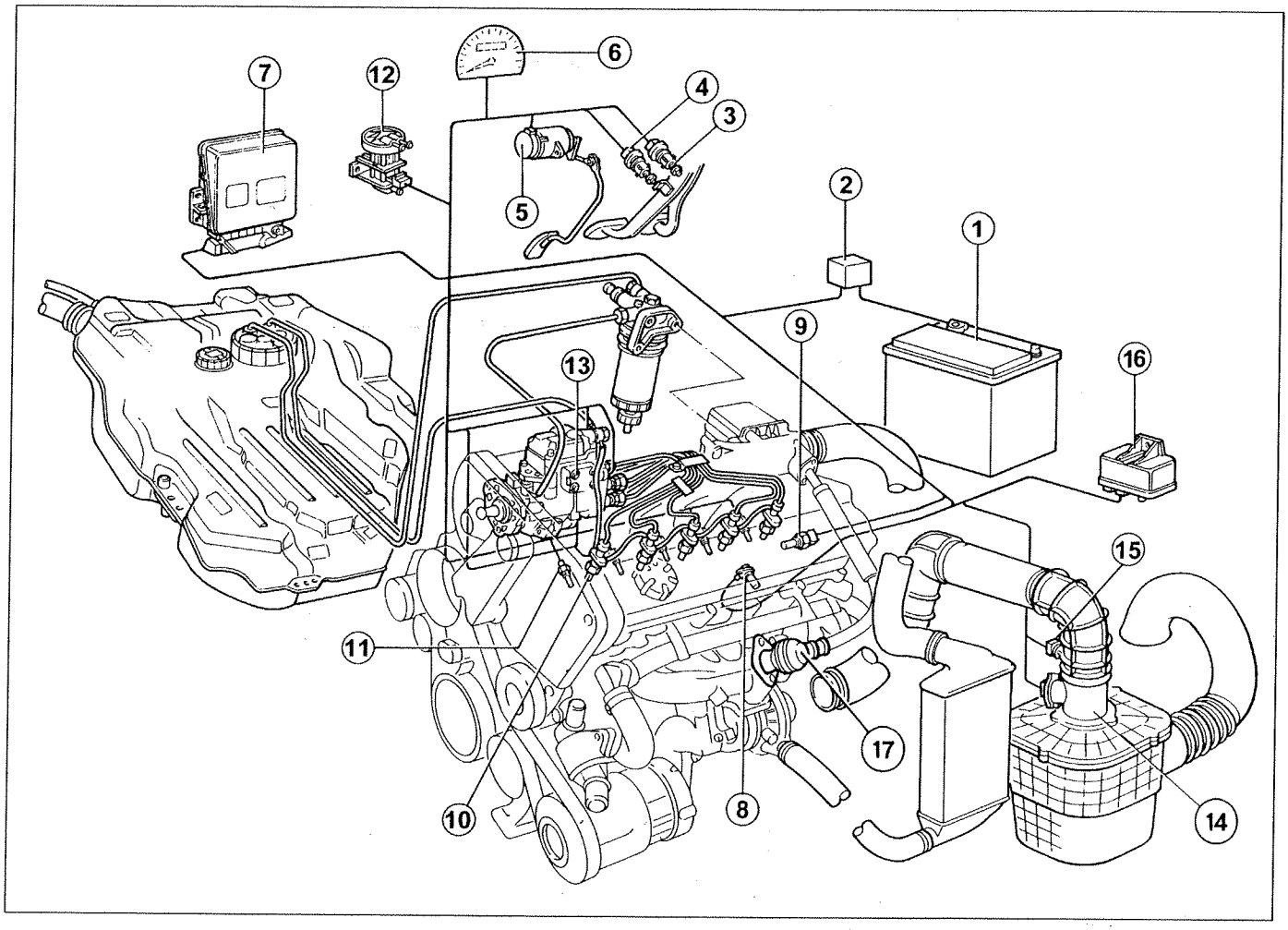

P3U24AX01

1. Battery
2. Relay
3. Clutch pedal switch
4. Brake pedal switch
5. Accelerator potentiometer
6. Speedometer
7. Electronic control unit
8. Rpm sensor
9. Coolant temperature sensor
10. Signal injector
11. Heater plugs
12. Borg-Warner modulator solenoid
13. Bosch injection pump
14. Debimeter
15. Air temperature sensor
16. Glow plug control unit
17. E.G.R. valve.

ARRANGEMENT OF COMPONENTS IN ENGINE BAY

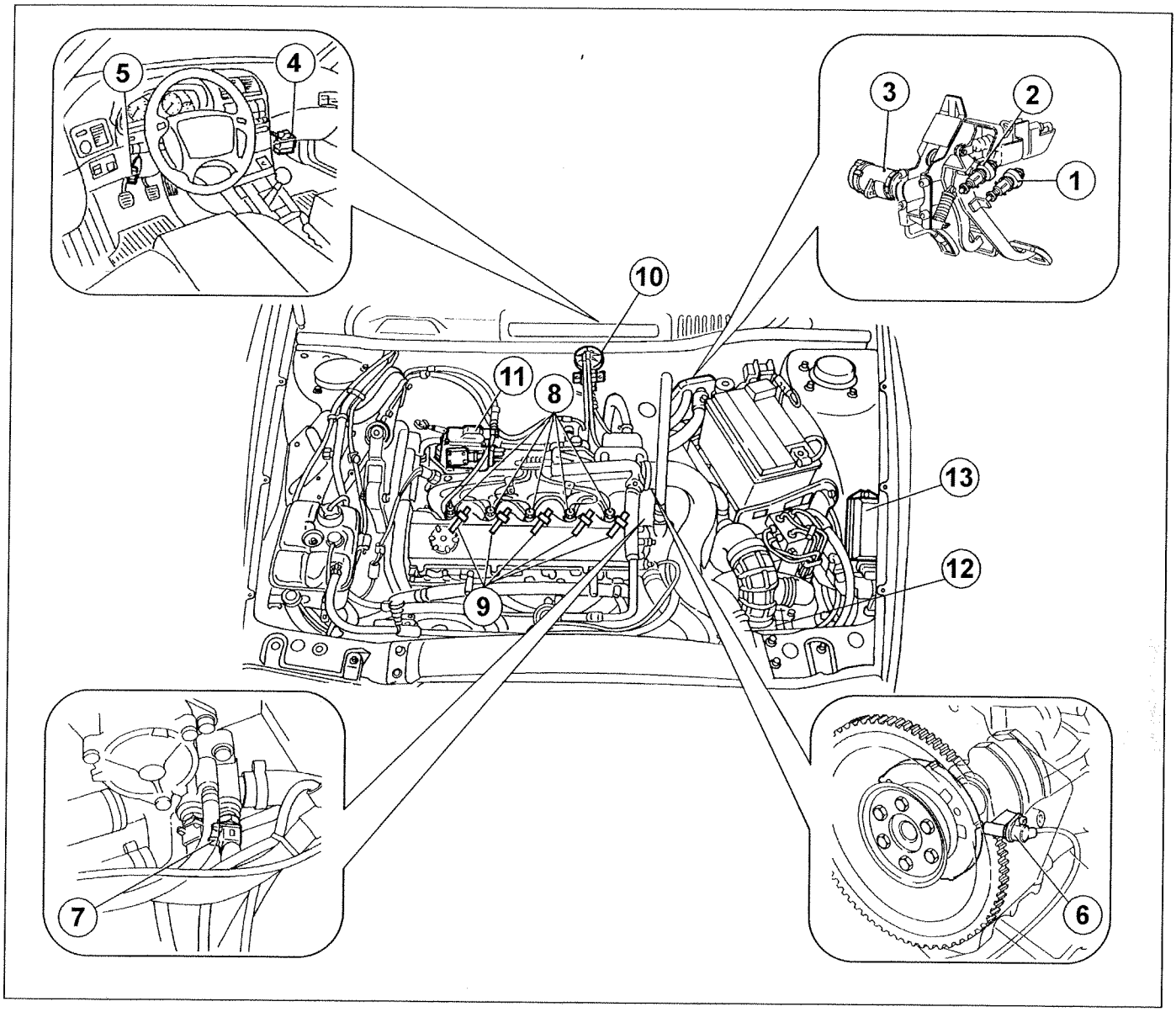

P3U25AX01

1. Clutch pedal switch
2. Brake pedal switch
3. Accelerator potentiometer
4. Electronic control unit
5. Diagnostic socket
6. Rpm sensor
7. Coolant temperature sensor
8. Injectors
9. Heater plugs
10. Borg Warner modulator valve
11. Bosch injection pump
12. Debimeter
13. Glow plug preheating control unit

Copyright Fiat Auto

DIAGRAM SHOWING INFORMATION FLOW BETWEEN BOSCH MP 3.2 FUEL SYSTEM ECU AND SENSOR/ACTUATORS

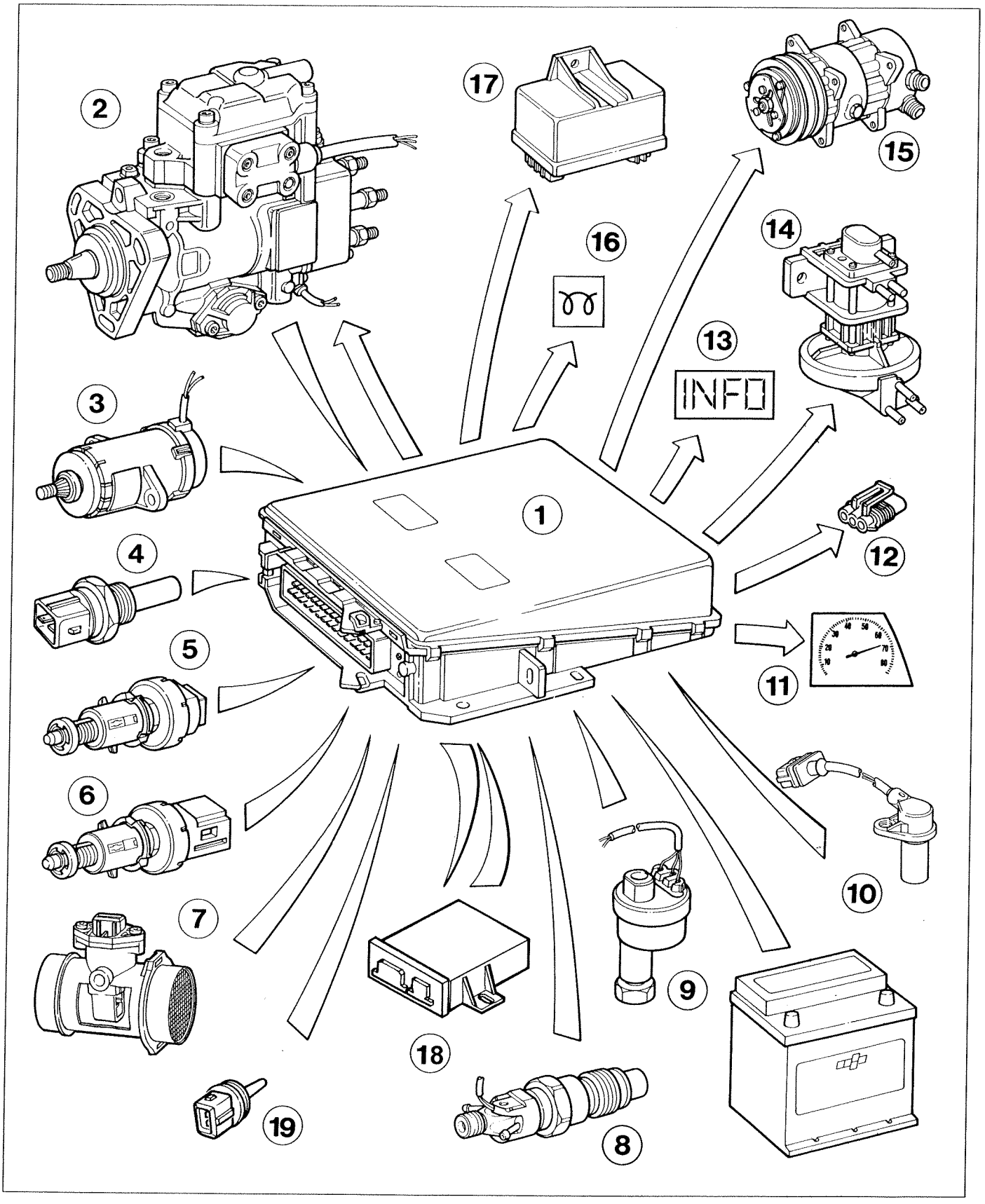

P3U28AX01

The BOSCH MSA11 control units (1) receive the following input:

- accelerator pedal position via accelerator potentiometer (3);
- rpm from sensor fitted to engine block (10);
- intake air quantity from debimeter (7);
- inlet air temperature from sensor (19);
- diesel temperature from sensor located in injection pump (2);
- fuel quantity actuator position signal, from sensor fitted to actuator, inside inejction pump (2);
- coolant temperature from sensor (4)
- actual injection start point (injection nozzle opening) from signal injector (8), on cylinder 1;
- vehicle speed from speedometer sensor (9) on the gearbox;
- brake operating information from contact (6) on the brake pedal;
- clutch operation from switch (5) on the clutch pedal;
- atmospheric pressure from a sensor inside the control unit (1);
- air condition activation request signal (if applicable);

Electronic control unit (1) reads input values, consults its memory maps and corrects output values accordingly to control:

- fuel quantity actuator inside injection pump (2);
- injection advance adjustment solenoid inside injection pump (2);
- engine stop solenoid inside injection pump (2);
- glow plug preheating control unit (17);
- Borg Warner vacuum modulator solenoid (14) controlling E.G.R. valve;
- glow plug warning light (16);
- fault information via infocenter (13);
- rev counter (11);
- air conditioner compressor electromagnetic clutch engagement (15);
- tester point (12).

The control unit is also interfaced with ignition immobiliser (18).

Copyright Fiat Auto

FUEL SYSTEM OPERATION

See pages 4 to 6 for a description of strategies implemented by the control unit under different operating conditions.

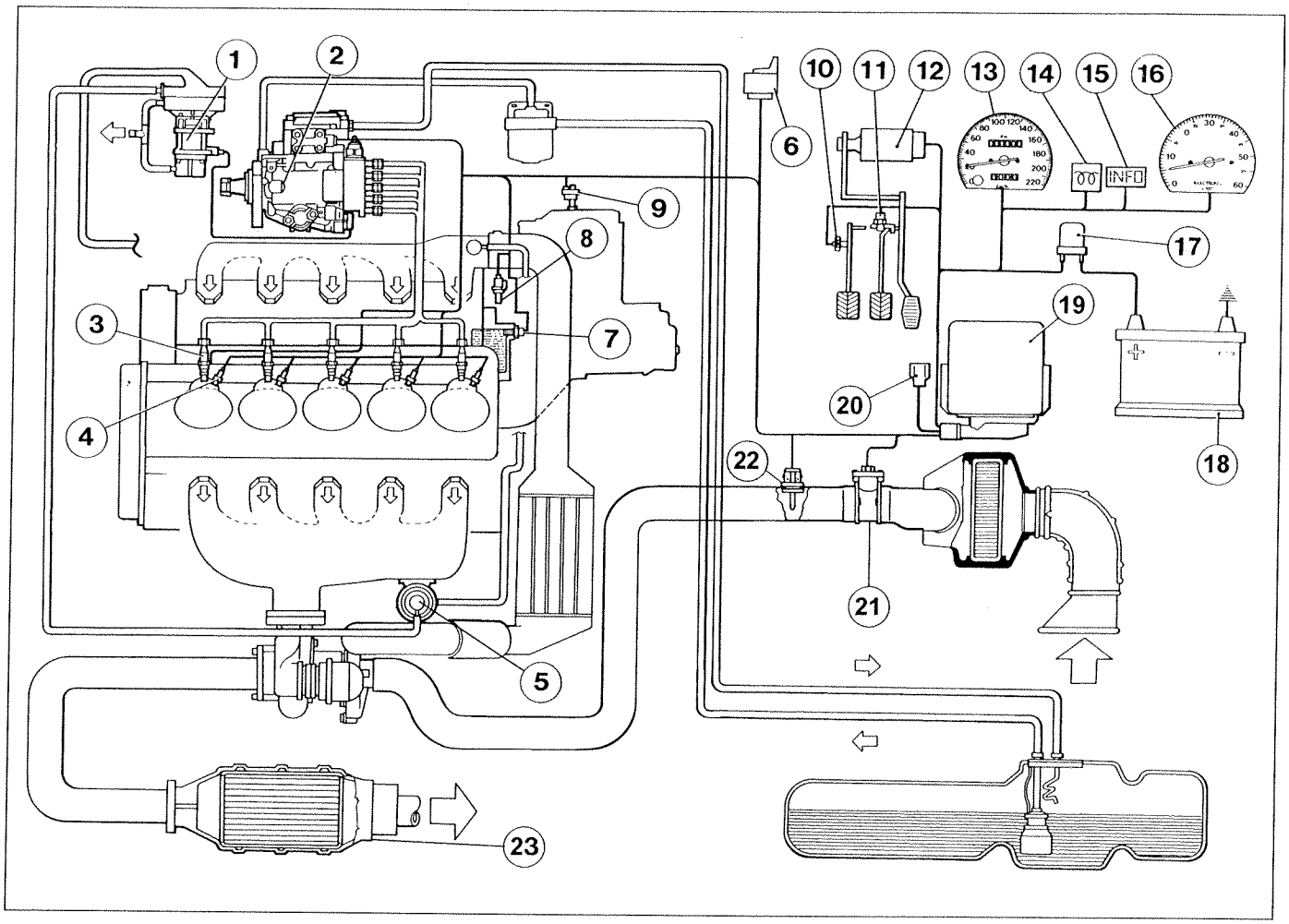

P3U30AX01

1. Borg Warner modulator valve
2. Bosch injection pump
3. Signal injector
4. Glow plug
5. EGR valve
6. Glow plug control unit
7. Coolant temperature sensor
8. Rpm sensor
9. Speed sensor
10. Clutch pedal sensor
11. Brake pedal sensor
12. Accelerator potentiometer
13. Speedometer
14. Preheating warning light bulb
15. Infocenter
16. Rev counter
17. Relay
18. Battery
19. Injection control unit
20. Tester point
21. Air flow meter (debimeter)
22. Intake air temperature sensor
23. Catalytic converter

Copyright Fiat Auto

PIN-OUT CONTROL UNIT

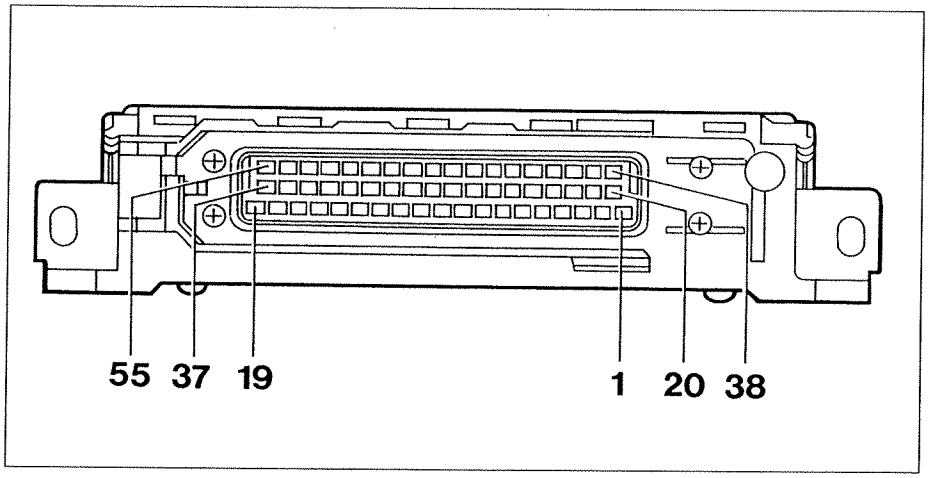

P3U20AX01

1. Fuel flow actuator
2. Fuel flow actuator
3. Engine stop solenoid
4. Infocenter
5. Signal injector
6. Solenoid for E.G.R.
7. N.C.
8. Glow plug control unit activation
9. A.C. compressor
10. Injection advance actuator
11. Glow plug activation warning light
12. Earth for signal injector
13. Shared sensor earth
14. Cursor position sensor
15. Main relay
16. Control unit power supply via relay
17. Control unit power supply via relay
18. Earth on body
19. Earth on body
20. N.C.
21. Cursor position sensor (reference winding)
22. N.C.
23. N.C.
24. N.C.
25. Idle switch on accelerator pedal
26. Brake light switch
27. N.C.
28. Clutch pedal switch
29. Vehicle speed signal
30. N.C.
31. N.C.
32. N.C
33. Accelerator pedal position sensor 5V
34. N.C.
35. Fuel temperature signal
36. N.C.
37. Accelerator pedal position sensor
38. Debimeter sensor
39. Cursor position sensor signal
40. N.C.
41. Glow plug operation signal
42. K line and immobilizer
43. N.C.
44. Compressor activation request signals
45. N.C.
46. N.C.
47. Rpm and TDC sensor.
48. N.C.
49. N.C.
50. Signal for tachometer
51. N.C.
52. Air temperature signal
53. Coolant temperature signal
54. N.C.
55. + ignition key

Copyright Fiat Auto

HOT FILM AIR FLOW METER (DEBIMETER)

This component measures quantity of air taken in by the engine. An electric output signal (proportional to flow) produced by the debimeter is sent to the engine control unit. This is used to:
- compute the quantity of fuel to be injected, in order to obtain the maximum possible fuel flow compatible with acceptable levels of exhaust smokiness;
- control the quantity of gas recirculated by the EGR valve.

The control of recirculated gas quantity is based on the following equation:

Qam - Qar = Qgr

Qam = theoretical air quantity mapped in the control unit for a given engine service condition;
Qar = quantity of air actually flowing through the debimeter (i.e. taken up by the engine) at the same engine service point;
Qgr = deviation of recirculated gas quantity from specified levels.

If the recirculated gas quantity is correct, for a given engine service point, the amount of air drawn up by the engine must be equal to the mapped quantity. Qgr must therefore be nil.
If Qam is greater than Qar, the quantity of air flowing through the debimeter must be lower than the theoretical level, i.e. recirculated gas quantity is greater than specified (Qgr » 0). In this case, the control system sends a command to the EGR valve to reduce flow in order to cancel out the Qgr value.
The system behaves in a similar way if Qar » Qam.

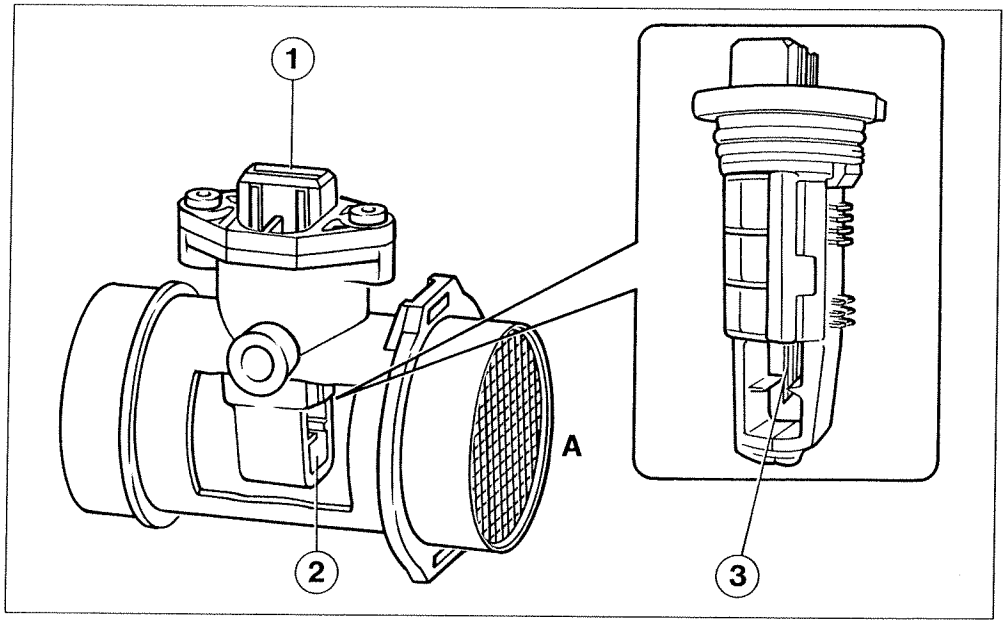

P3U17CX01

1. Connector
2. Measurement channel
3. Hot film sensor

A = Air intake

The air flow meter is "hot film" type.
These sensors operate on the principle of heat exchange between a warm element and an air flow striking the element.
The heat exchanged is given by electric power RI2 supplied by the power source to the warm element to maintain the temperature constant.

The following sensor control circuit wiring diagram illustrates the principle of operation of the debimeter:

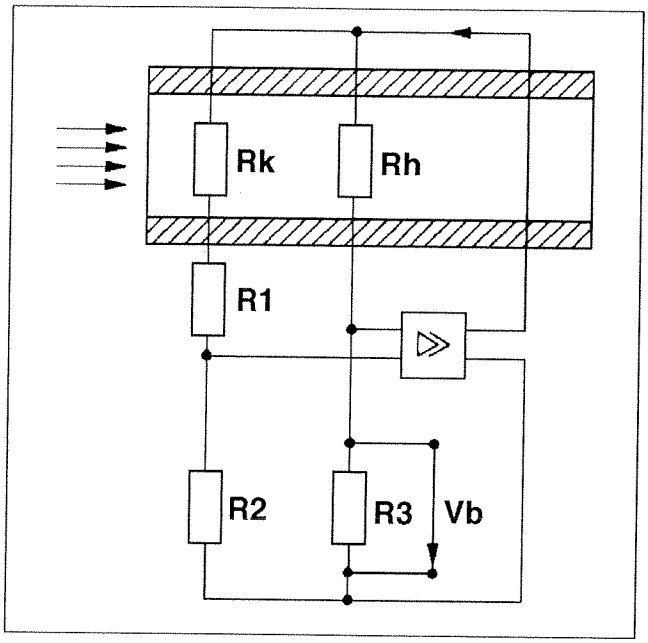

P3U33AX01

Wiring diagram

Rh = hot film

Rk = temperature compensation sensor

R1, R2, R3 = bridge resistances

In the diagram, Rh represents the hot sensor maintained at constant temperature in relation to air temperature.
An increase in the quantity of air striking the hot element leads to cooling and thus a drop in resistance. The bridge is unbalanced.
The circuit restores bridge balance by increasing current supplied by the hot element until its resistance (and thus its temperature) is restored to original balanced level.
The increase in current passing through the hot element is proportional to the quantity of air flowing through the debimeter. Current value therefore reflects air flow. The voltage at the terminals of fixed resistance R3 is measured to calculate the current flowing through the hot film with precision. The voltage reading provides information on the weight of air flowing through the meter.

Resistance Rk is connected in parallel with the hot film to compensate for reading errors due to air temperature changes. Its high value changes only when air temperature changes to compensate for the increased resistance of the hot sensor to ensure that the bridge is not unbalanced due to air temperature changes.

The hot element is made out of platinum. Film technology allows much faster response times per unit area than hot wire technology. Because film surface area is higher than wire surface area, a film is more immune to inorganic contamination.

Copyright Fiat Auto

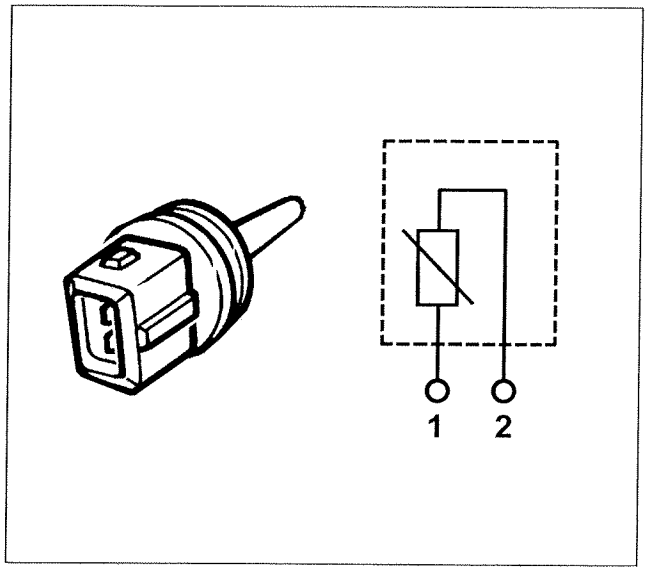

P3U12BX01

INTAKE AIR TEMPERATURE SENSOR

The intake air temperature sensor is connected downsteam of the hot film debimeter. It consists of a brass case which houses the resistance element. This takes the form of an NTC (negative temperature coefficient) thermistor, i.e. its voltage falls as temperature rises.

The control unit is able to assess intake air temperature exactly on the basis of a voltage signal received from the sensor.

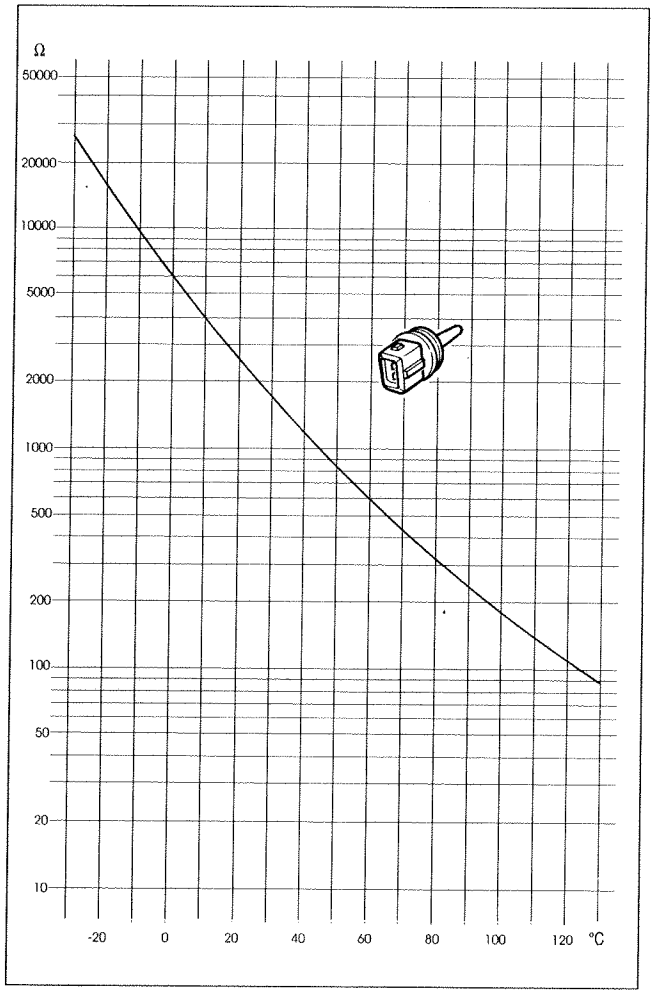

P3U34AX01

Checking resistance

The graph shows changes in resistance levels. Resistance may be measured by disconnecting the connector and connecting an ohmmeter to the sensor terminals.

WIRING DIAGRAM

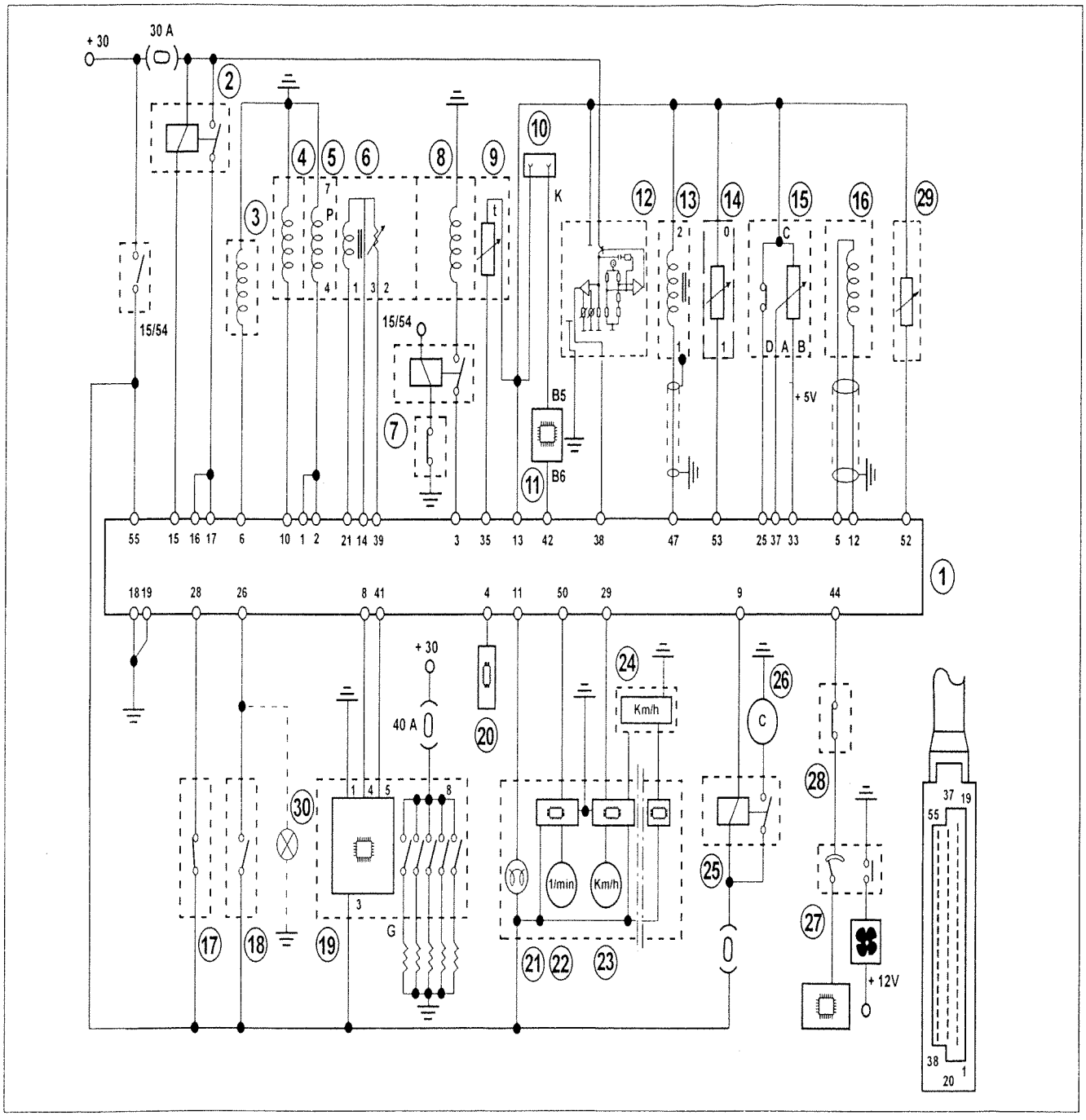

P3U35AX01

1. Electronic control unit
2. System protection relay
3. Borg-Warner modulator solenoid
4. Injection advance actuator
5. Fuel quantity actuator
6. Fuel quantity actuator position control
7. Inertia switch
8. Engine stop solenoid
9. Fuel temperature sensor
10. Diagnostic socket for FIAT/LANCIA tester
11. Immobilizer
12. Debimeter
13. Engine rpm and TDC sensor
14. Coolant temperature sensor
15. Accelerator pedal potentiometer with idle switch
16. Signal injector
17. Clutch pedal switch
18. Brake pedal switch
19. Preheating electronic control unit
21. Glow plug warning light
22. Rev counter
23. Speedometer
24. Speedometer sensor
25. Air conditioner compressor control relay
26. Air conditioner compressor
27. Three stage pressure switch
28. Anti-frost thermostat
29. Air temperature sensor

page

ENGINES 1998 20v 2446 20v

FUEL SYSTEM
- Fuel system operating diagram 1

LUBRICATION
- Lubrication system operating diagram 3

COOLING SYSTEM
- Cooling system operating diagram 5

ENGINE 2959 V6 24v

FUEL SYSTEM
- Fuel system operating diagram 7

COOLING SYSTEM
- Cooling system operating diagram 9

ENGINE 2387 TD

FUEL SYSTEM
- Fuel system operating diagram 11

LUBRICATION
- Lubrication system operating diagram 13

COOLING SYSTEM
- Cooling system operating diagram 15

Copyright Fiat Auto

COPYRIGHT Fiat Auto S.p.A.

Reproduction of all or part of the text and illustrations is prohibited.

The information in this publication is intended as a guide and could be superseded by modifications introduced by the Manufacturer at any time for technical and commercial reasons or in accordance with local regulations.

Fiat Auto S.p.A.
Direzione Marketing Commerciale
Direzione Post-Vendita - Servizi - Assistenziali
10134 TURIN (Italy) - Corso E. Giambone, 33
Print no. 506.475 - Ottobre 1994 - 500
Printed in Italy - Tip. Europrint - Torino

FUEL SYSTEM OPERATING DIAGRAM

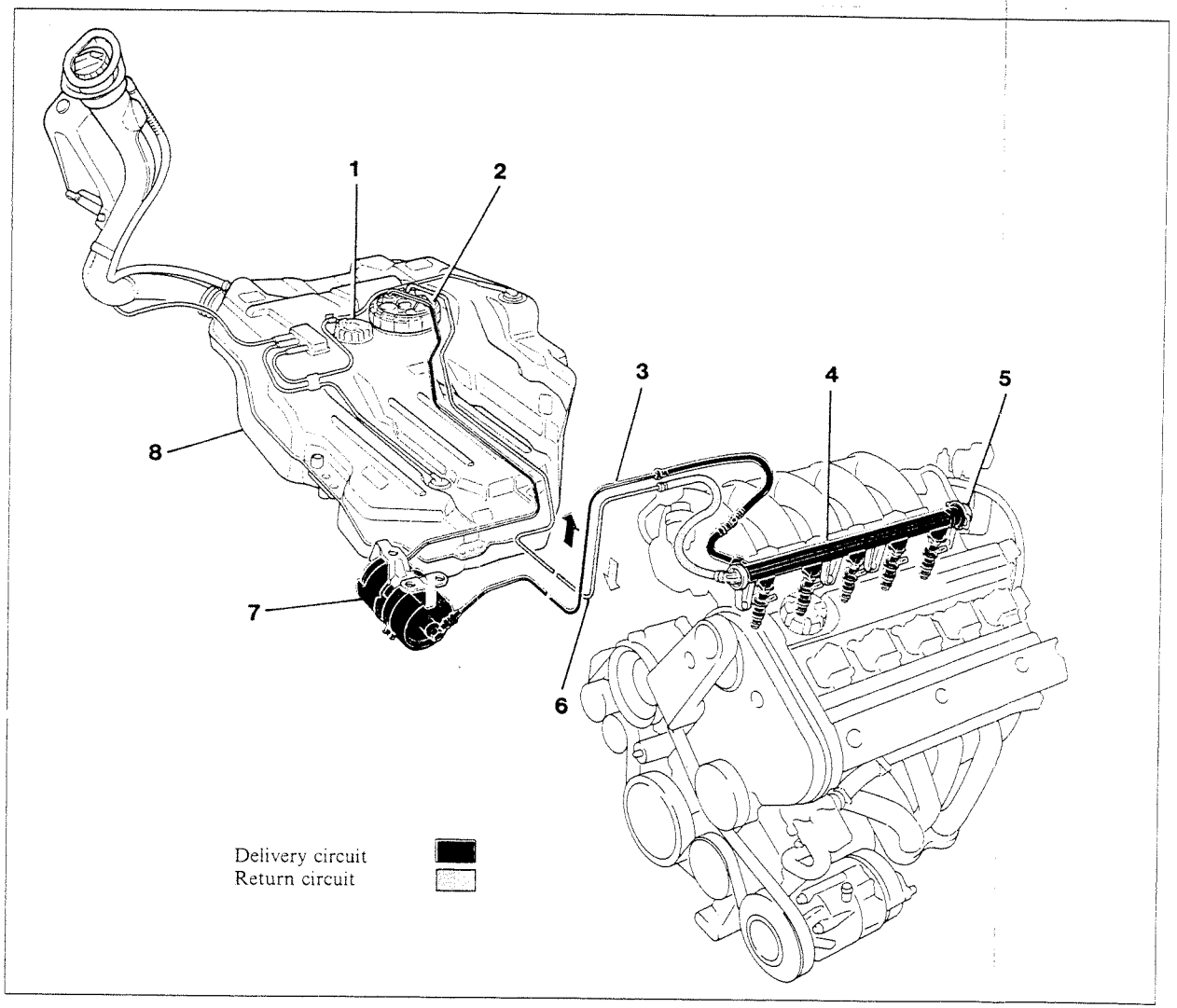

P3U001K02 P3U001K01

Key

1. Fuel level gauge
2. Electric fuel pump, located inside fuel tank
3. Line carrying fuel to injectors
4. Fuel manifold
5. Fuel pressure regulator
6. Fuel return lines from pressure regulator to tank
7. Fuel filter
8. Fuel tank

Copyright Fiat Auto

LUBRICATION SYSTEM OPERATING DIAGRAM

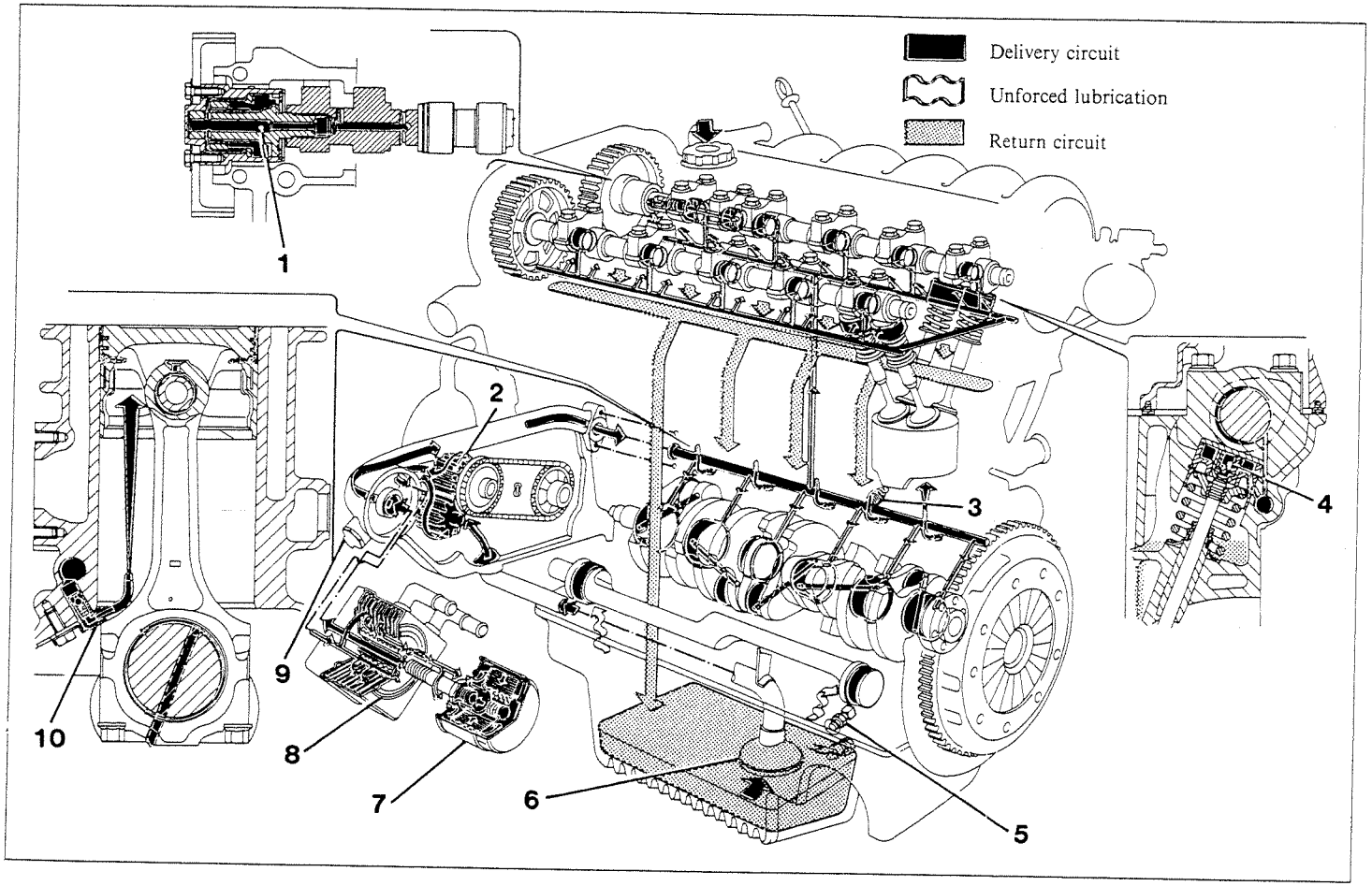

P3U003K02 P3U003K01

Key

1. Intake end camshaft timing variator
2. Gear-type oil pump
3. Low engine oil pressure switch
4. Hydraulic tappets
5. Insufficient engine oil level indicator switch
6. Suction head with filter mesh
7. Full-flow cartridge oil filter with safety by-pass valve for clogged filter
8. Oil - coolant heat exchanger
9. Oil pressure pressure regulation valve
10. Oil spray for piston cooling

COOLING SYSTEM OPERATING DIAGRAM

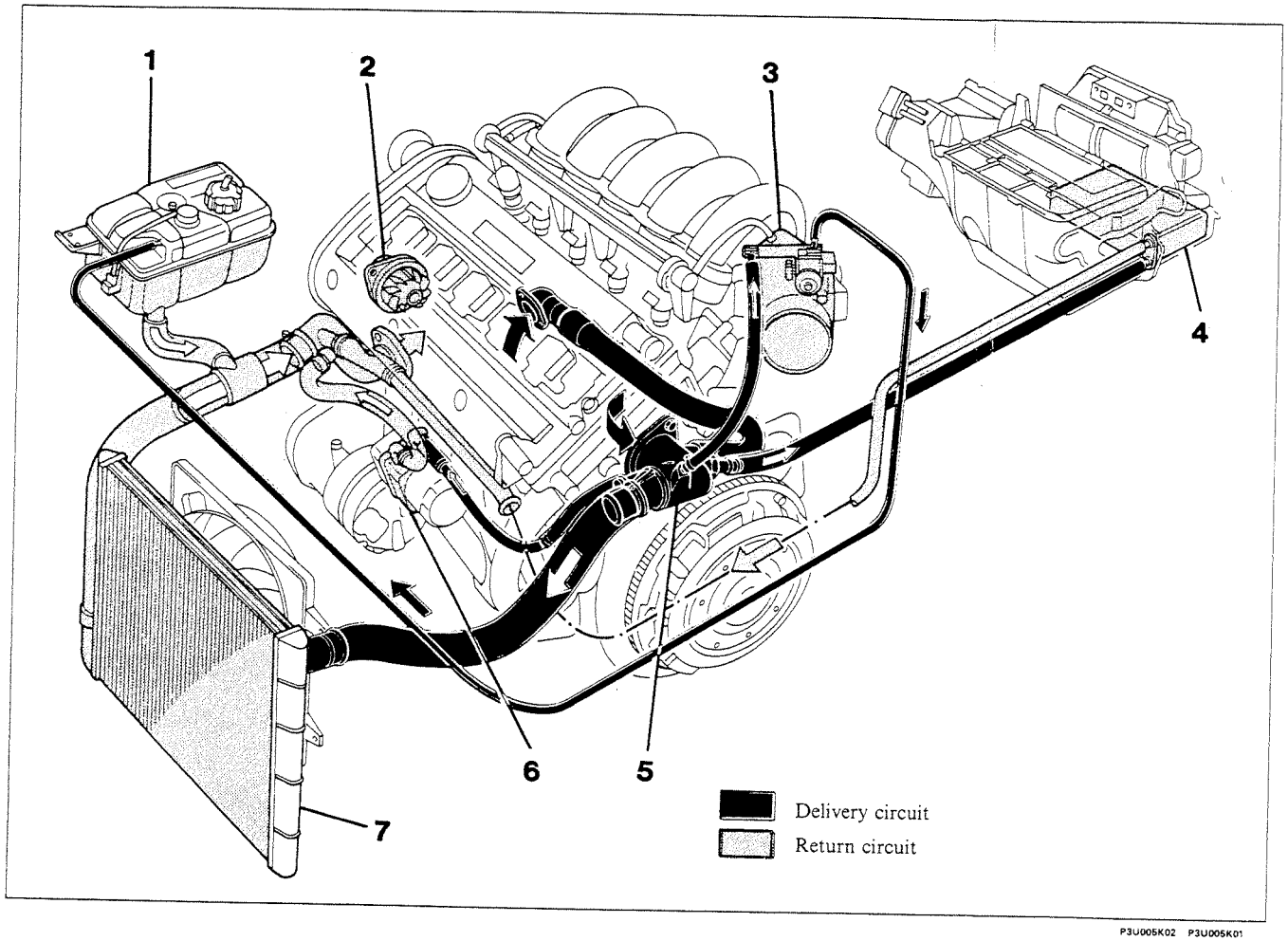

P3U005K02 P3U005K01

Key

1. Supplementary expansion tank
2. Coolant pump
3. Throttle case
4. Passenger compartment heater radiator
5. Coolant mixing by-pass thermostat
6. Oil-coolant heat exchanger
7. Coolant radiator

Copyright Fiat Auto

FUEL SYSTEM OPERATING DIAGRAM

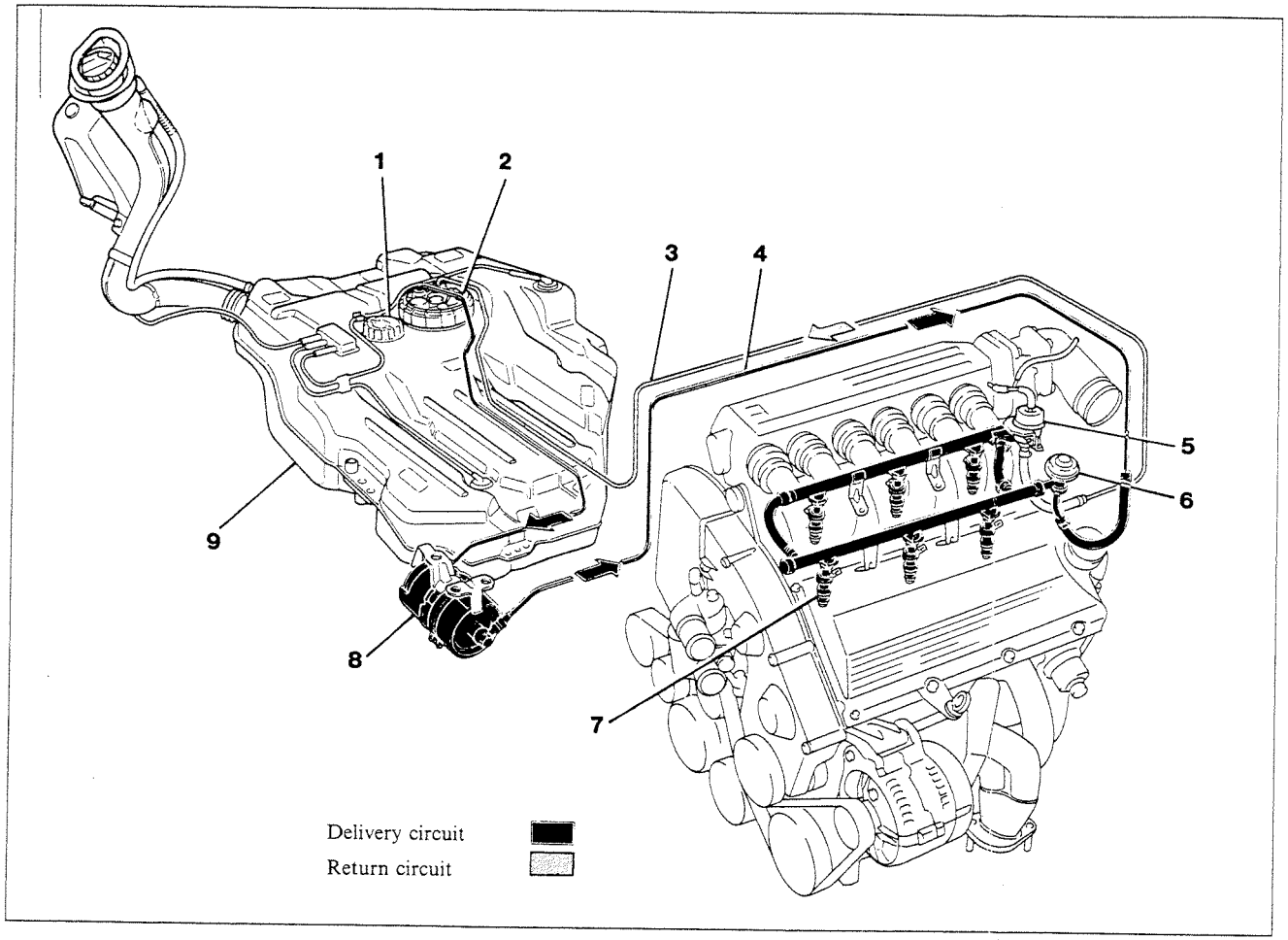

P3U007K02 P3U007K01

Key

1. Fuel level gauge
2. Electric fuel pump, located inside fuel tank
3. Fuel return lines from pressure regulator to tank
4. Line carrying fuel to injectors
5. Fuel pressure regulator
6. Pressure damper
7. Injectors
8. Fuel filter
9. Fuel tank

COOLING SYSTEM OPERATING DIAGRAM

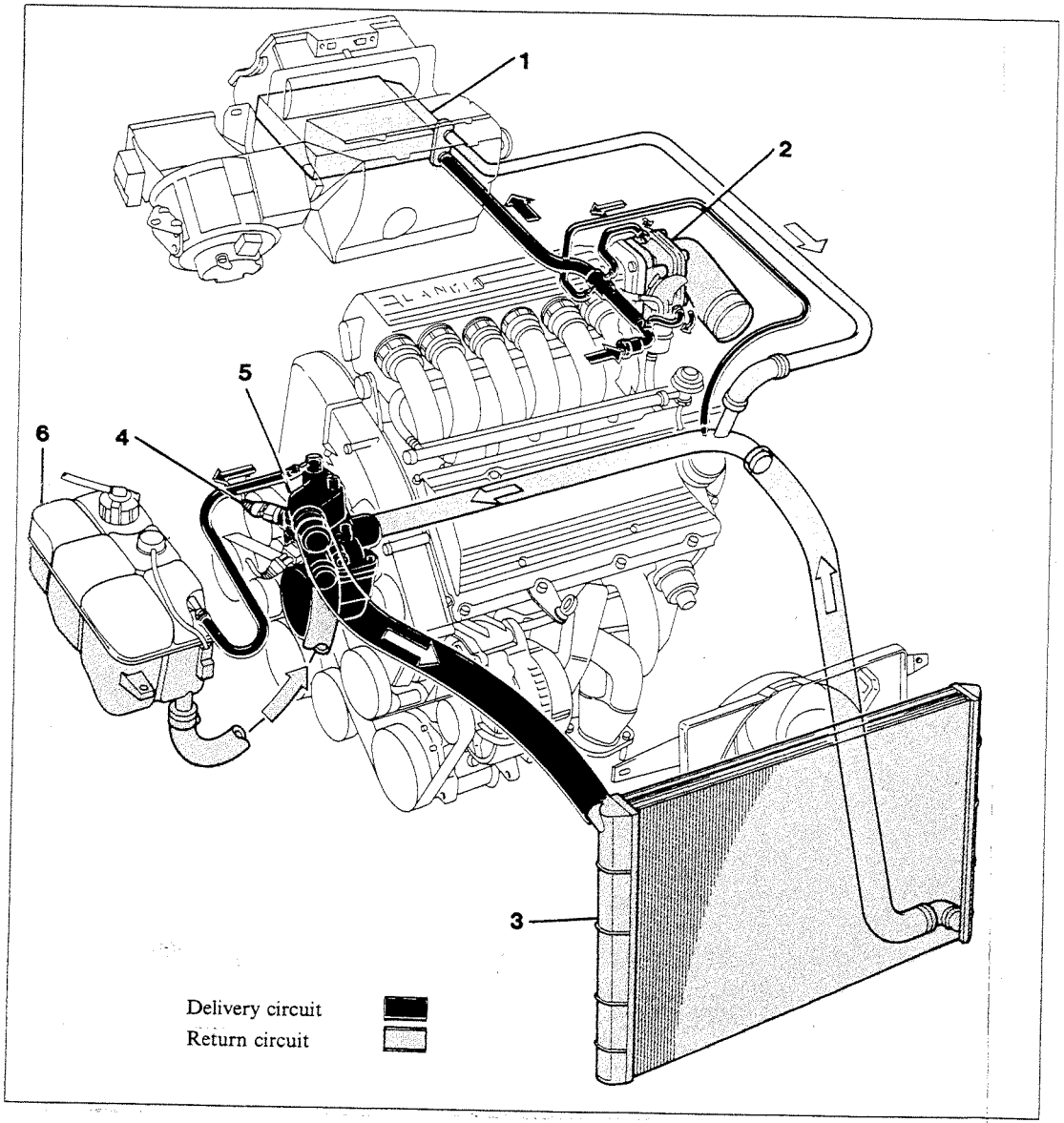

P3U009K02 P3U009K01

Key

1. Passenger compartment heater radiator
2. Throttle case
3. Coolant radiator
4. Coolant temperature sender unit
5. Coolant mixing by-pass thermostat
6. Supplementary expansion tank

FUEL SYSTEM OPERATING DIAGRAM

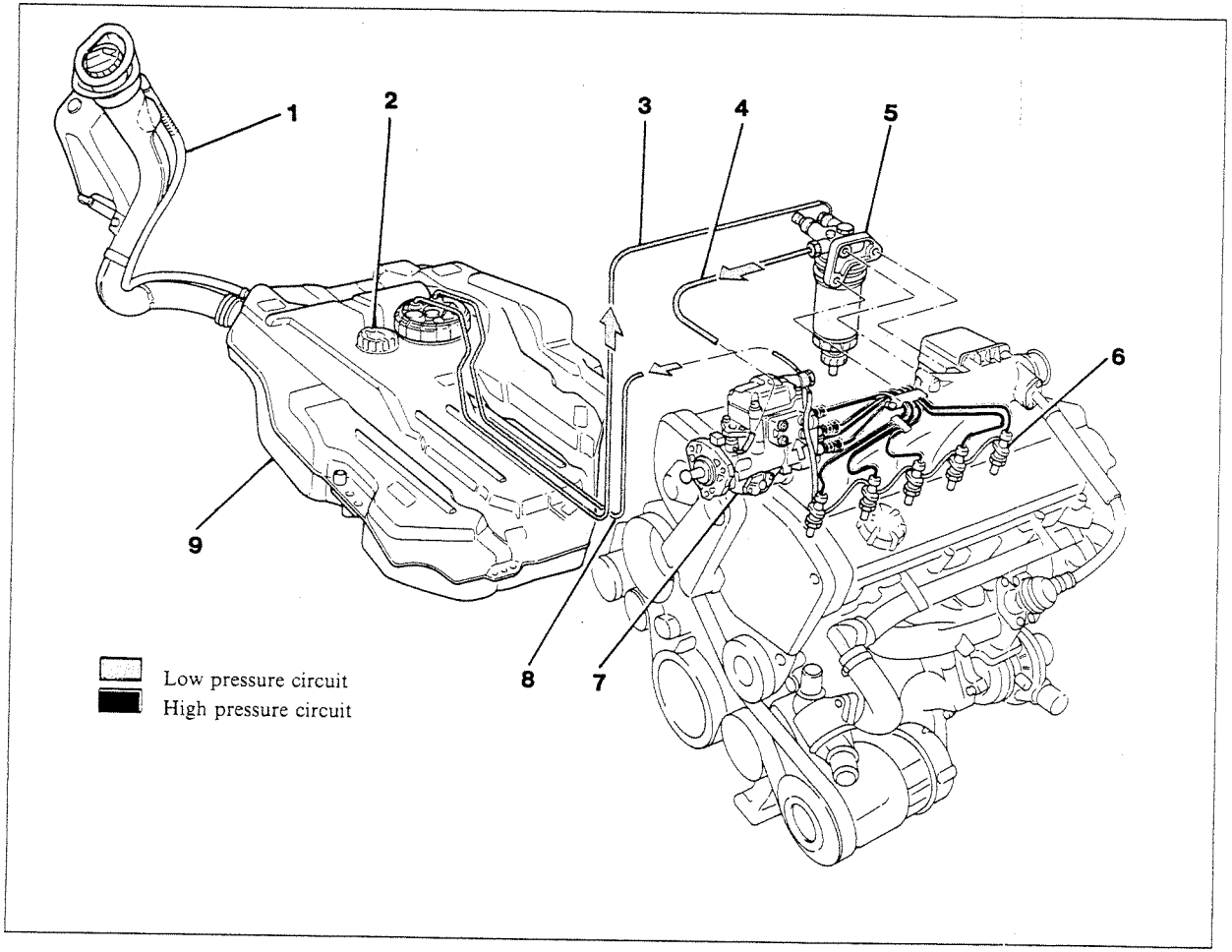

P3U011K02 P3U011K01

Key

1. Antiregurgitation pipe
2. Fuel level gauge
3. Fuel delivery line from tank to filter
4. Fuel delivery line from filter to injection pump
5. Fuel filter
6. Injectors
7. Bosch injection pump
8. Fuel return line from pump to tank
9. Fuel tank

LUBRICATION SYSTEM OPERATING DIAGRAM

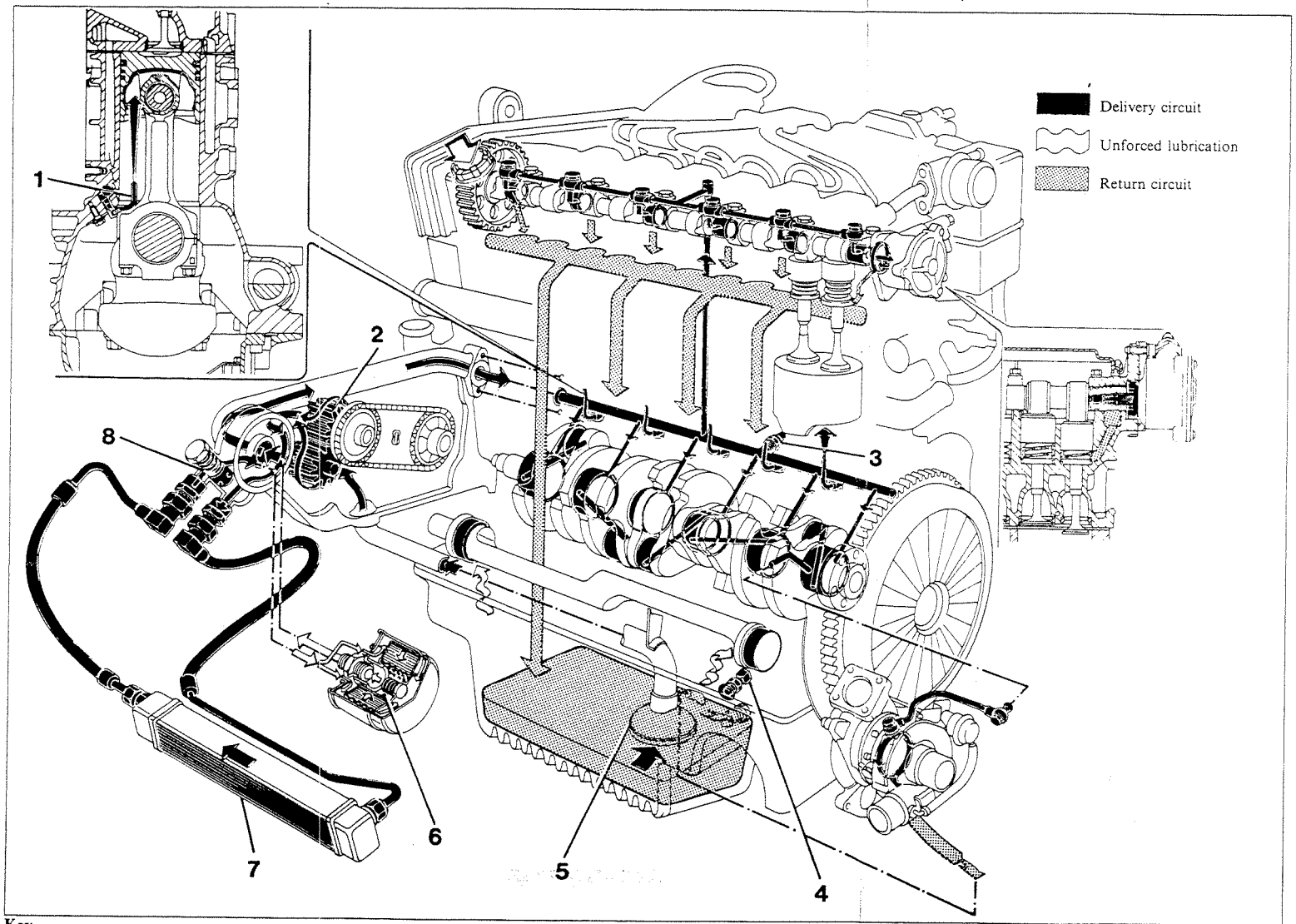

P3U013K02 P3U013K01

Key

1. Oil sprays for piston cooling
2. Gear-type oil pump
3. Low engine oil pressure switch
4. Insufficient engine oil level indicator switch
5. Suction head with filter mesh
6. Full-flow cartridge oil filter with safety by-pass valve for clogged filter
7. Oil cooling radiator
8. By-pass thermostat valve for oil radiator

Copyright Fiat Auto

COOLING SYSTEM OPERATING DIAGRAM

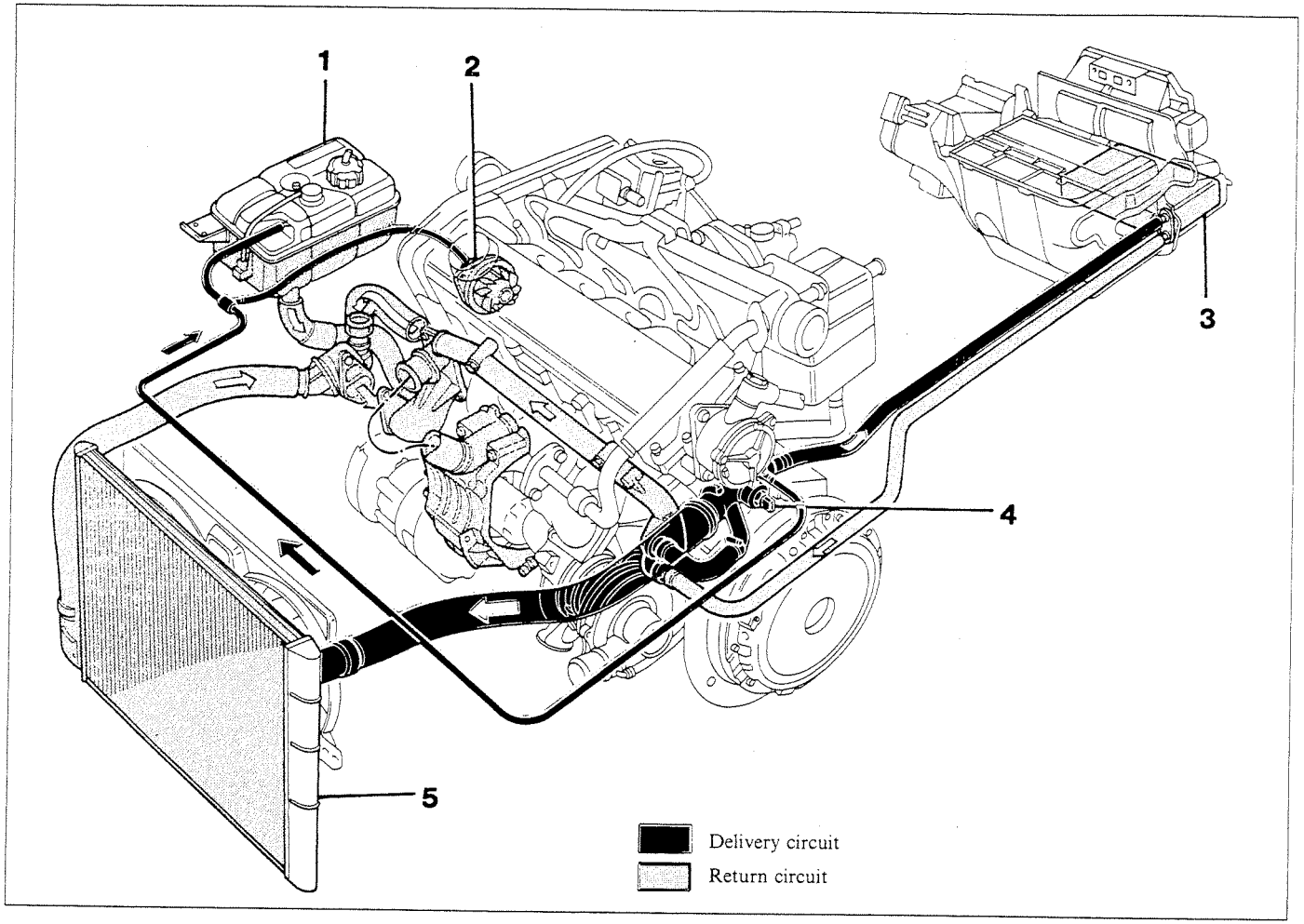

P3U015K02 P3U015K01

Key

1. Supplementary expansion tank
2. Coolant pump
3. Passenger compartment heater radiator
4. Coolant mixing by-pass thermostat
6. Coolant radiator

page

REMOVING-REFITTING

- Removing-refitting power unit using trolley 1860823000 1
- Removing-refitting power unit without the aid of trolley 1860823000 13

CHANGING BELTS

- Removing-refitting auxiliary drive belt 15
- Removing-refitting alternator - coolant pump drive belt 16
- Removing-refitting air conditioner compressor drive belt 17
- Removing-refitting power steering pump drive belt 18
- Removing-refitting counter-rotating shaft drive belt 19
- Removing-refitting timing belt 23

REMOVING-REFITTING CYLINDER HEAD

- Removing-refitting cylinder head 26

Copyright Fiat Auto

COPYRIGHT FIAT AUTO

The reproduction, even partial, of the text and illustrations is prohibited.

The information contained in this publication is purely indicative and could be out of date following modifications made by the Manufacturer, at any time, for technical or commercial reasons or in order to conform to legal requirements in the various countries.

Fiat Auto S.p.A.
Direzione Marketing e Commerciale
Servizi al Cliente - Servizi Post Vendita
10134 TORINO (Italy) - Corso E. Giambone, 33
Publication no. 506.475/05 - Aprile 1995 - 400
Printed in Italy - Tip. Giraudo - TORINO
order no. 60489504

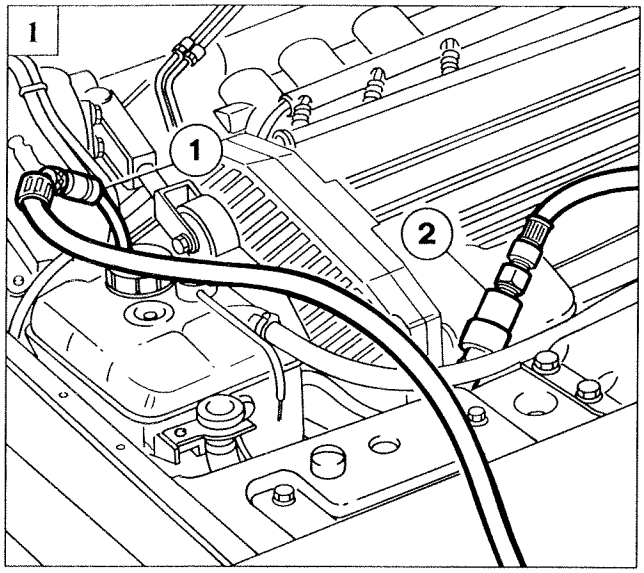

P3U01DJ01

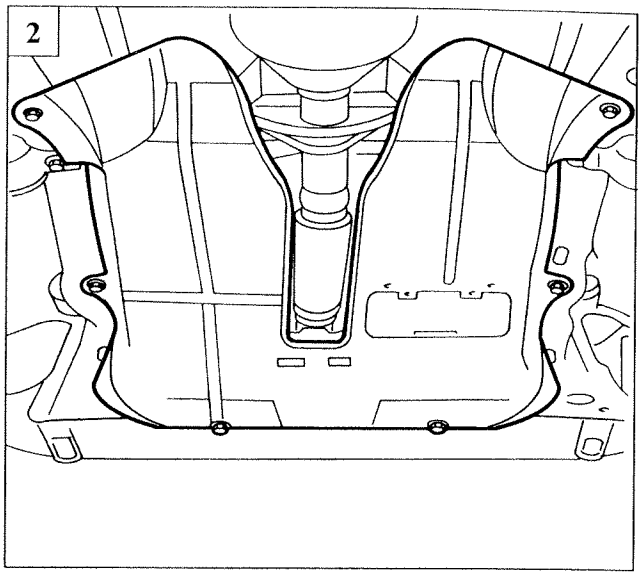

P3U01DJ02

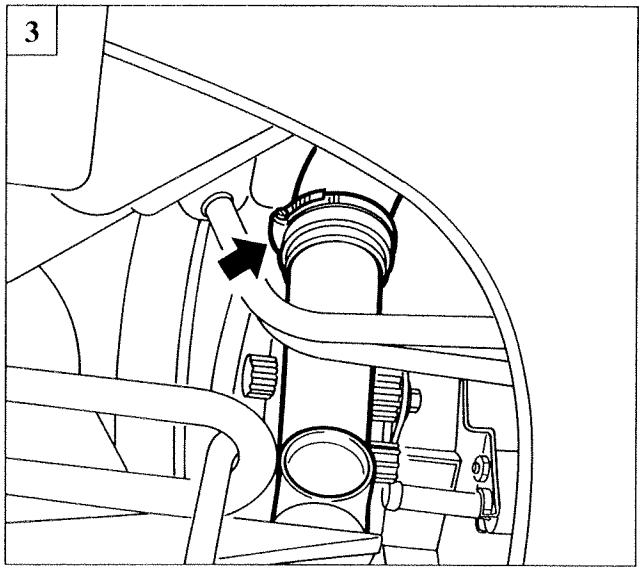

P3U01DJ03

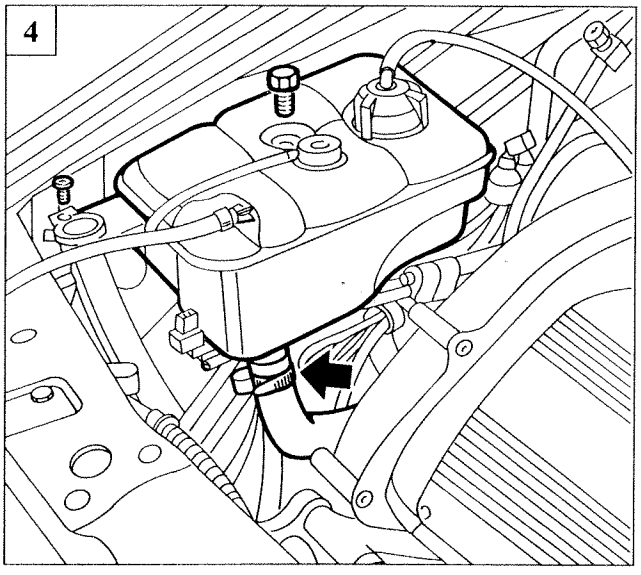

P3U01DJ04

REMOVING-REFITTING POWER UNIT USING TROLLEY 1850823000

Arrange vehicle on a lift, disconnect battery negative lead, remove the front wheel and then proceed as follows:

1. Drain air conditioning system using appropriate Cleaner 134 device. Connect quick-release fitting on blue hose to needle valve (1) and quick releaes fitting on red hose to needle valve (2), as described in section 50 of this manual.

When draining the system, wear gloves and goggles to protect against harmful contact with jets of R 134 A.
To facilitate the coolant drainage operation, run the cooling system and engine for 10-15 minutes.

2. Remove the lower engine bay cover.
3. Drain the coolant by removing the sleeve clip shown in the figure, located in the bottom part of the radiator and accessible from the right wheel arch.
4. Disconnect the coolant sleeves shown. Disconnect electrical connection, unscrew screw retaining screen washer fluid filler fitting and central tank retaining screw, then remove expansion tank from vehicle.

Copyright Fiat Auto

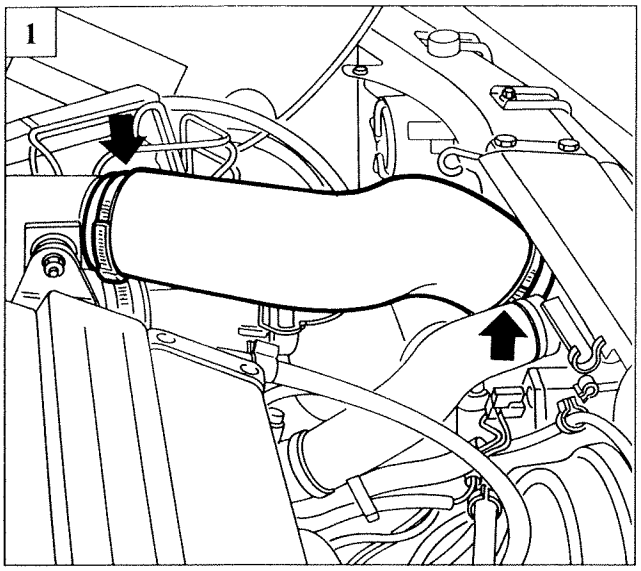

P3U02DJ01

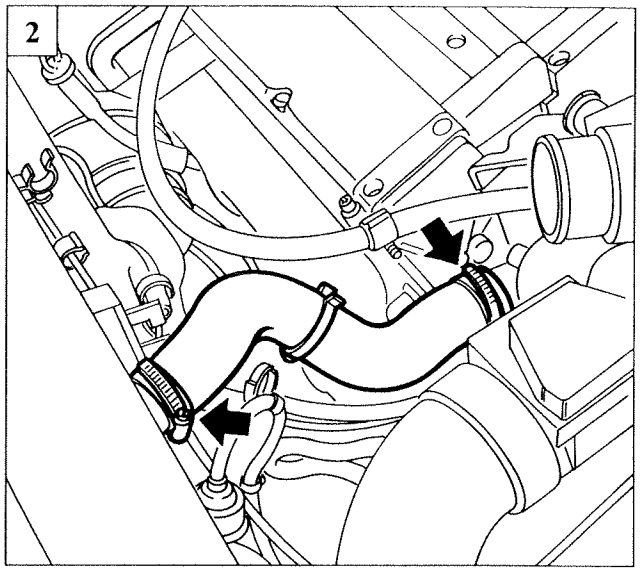

P3U02DJ02

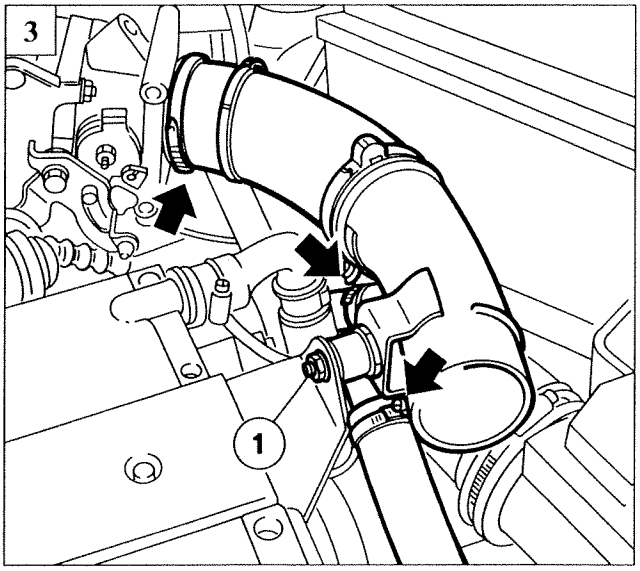

P3U02DJ03

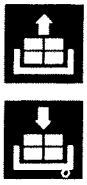

1. Disconnect the air intake sleeve.
2. Disconnect top sleeve, shown in figure, from radiator.
3. Disconnect the line connecting the intercooler to the butterfly valve case by removing the three clips indicated and nut (1).
4. Disconnect sleeve connecting flow meter and turbocharger.
5. Disconnect connection (1), unscrew nuts (2), then remove air cleaner by releasing lower line from air intake.

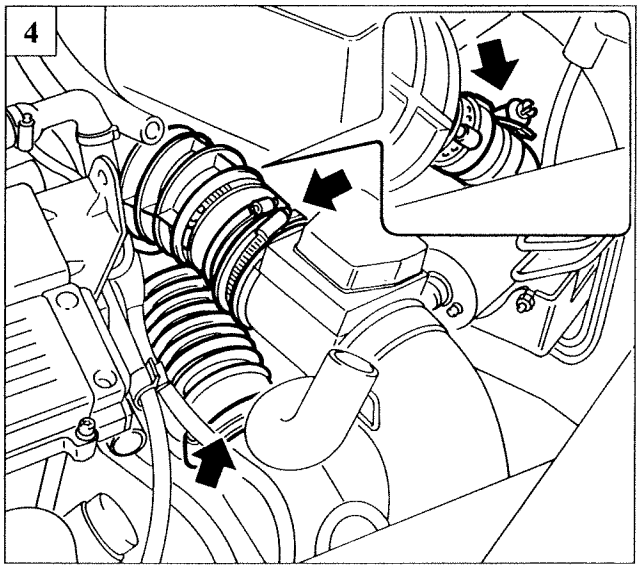

P3U02DJ04

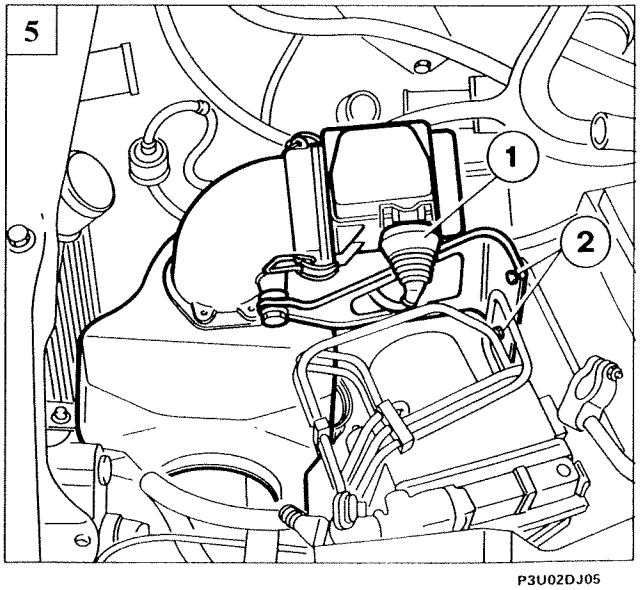

P3U02DJ05

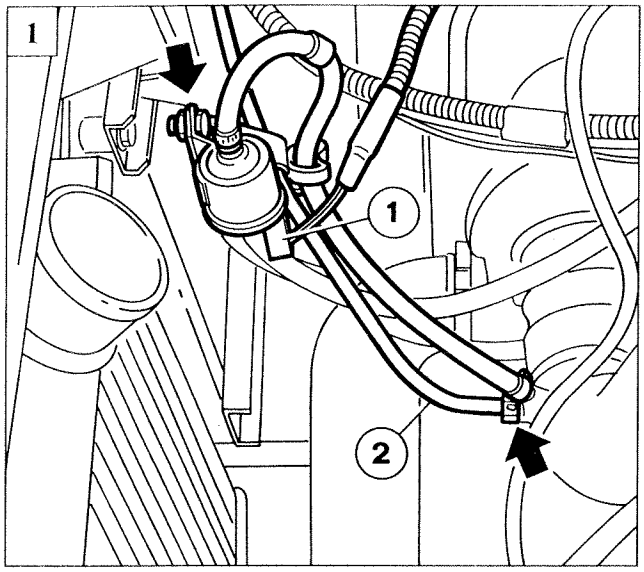

P3U03DJ01

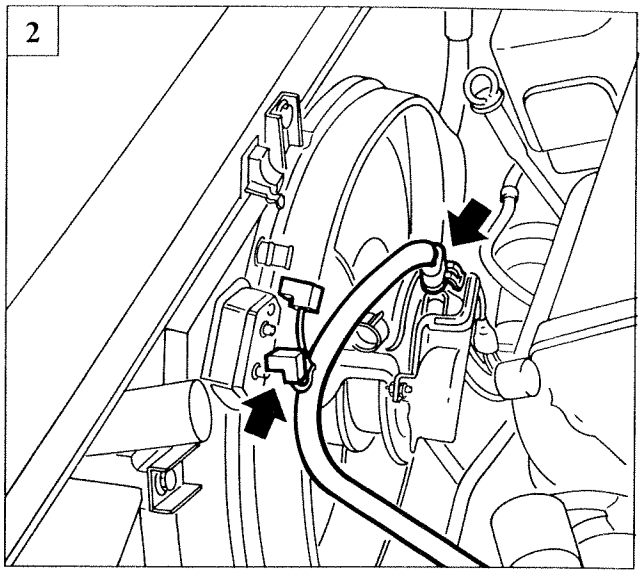

P3U03DJ02

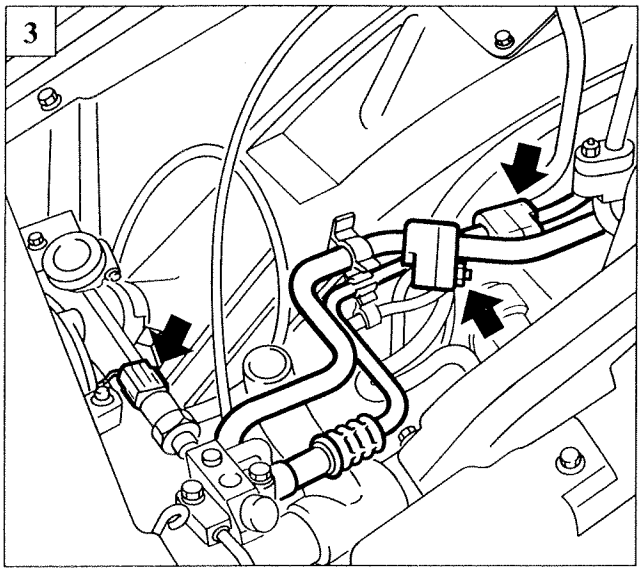

P3U03DJ03

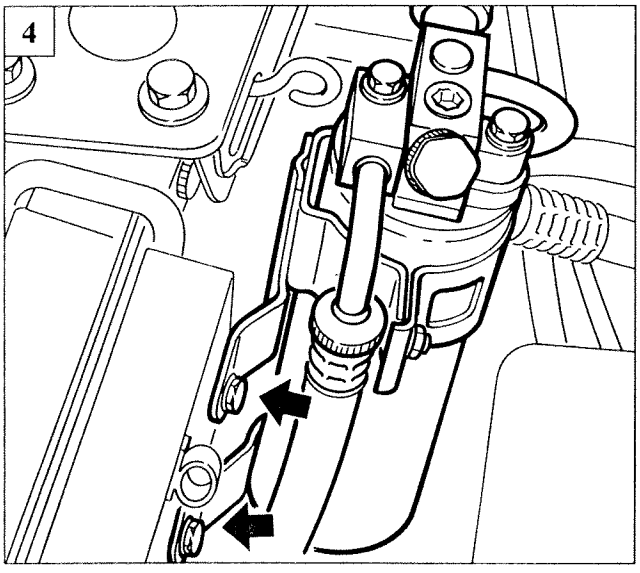

P3U03DJ04

1. Disconnect connection (1), remove line (2), then unscrew retaining screw and remove Pierburg valve
2. Disconnect connections shown in figure from engine cooling fan.
3. Disconnect electrical connection from three--stage pressure switch, then disconnect lines leading to condenser and evaporator from dehydrating filter.

Seal disconnected line ends to prevent dehydrating filter and air conditioning system from absorbing moisture, which could impair system operation.

4. Unscrew the screws retaining the dehydrating filter bracket in order to facilitate removal from radiator-condenser-fan assembly.

Copyright Fiat Auto

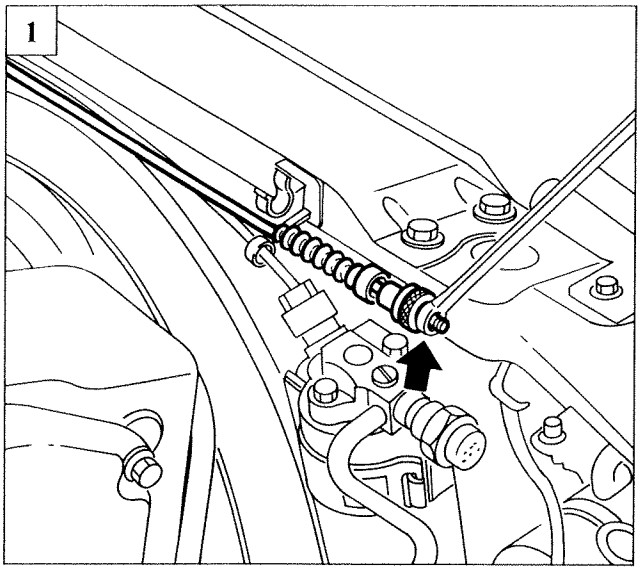

P3U04DJ01

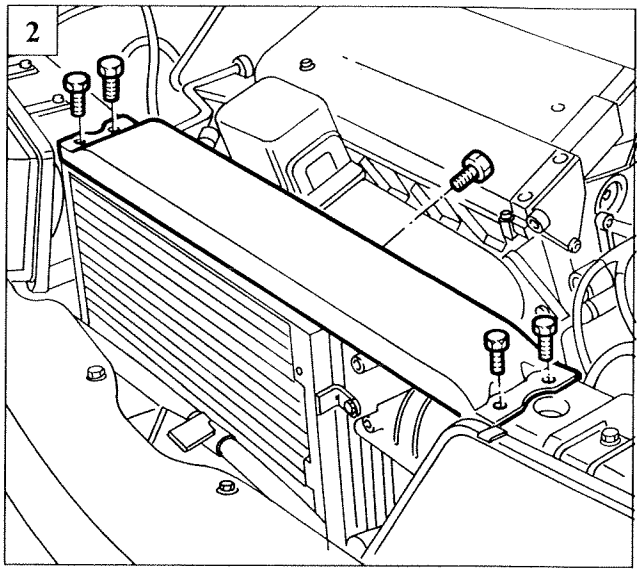

P3U04DJ02

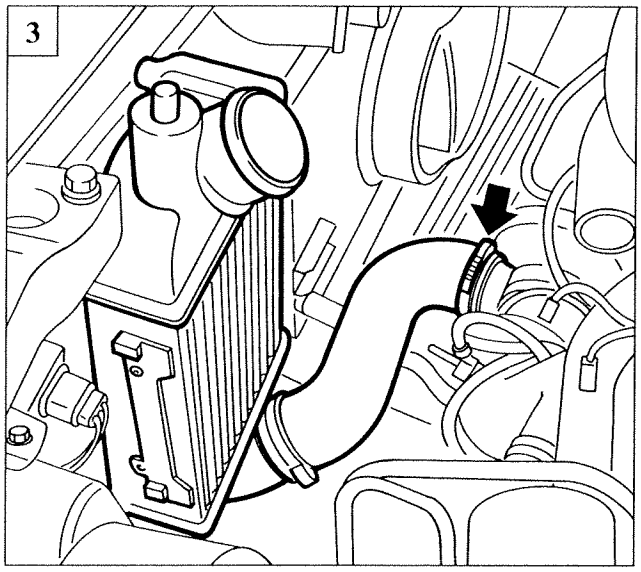

P3U04DJ03

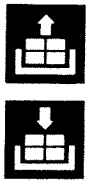

1. Disconnect the bonnet opening link by loosening the nut shown in the figure. Release the cable from the retaining clip.
2. Remove the bean located above the radiator unit by unscrewing the screws shown in the figure.
3. Remove the clip shown in the figure, then lift out intercooler.
4. Disconnect turbo cooling line shown in figure.
5. Remove the lower radiator unit retaining screws.

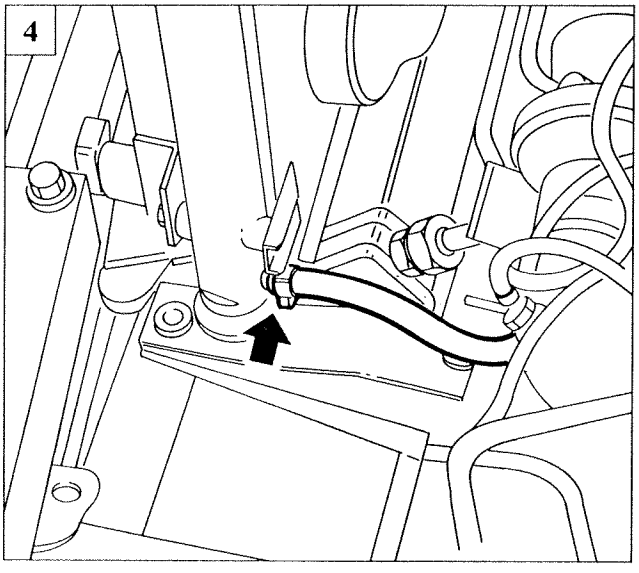

P3U04DJ04

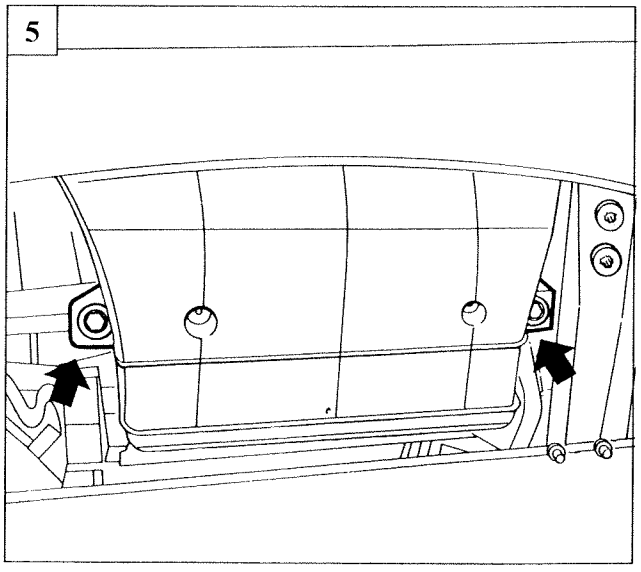

P3U04DJ05

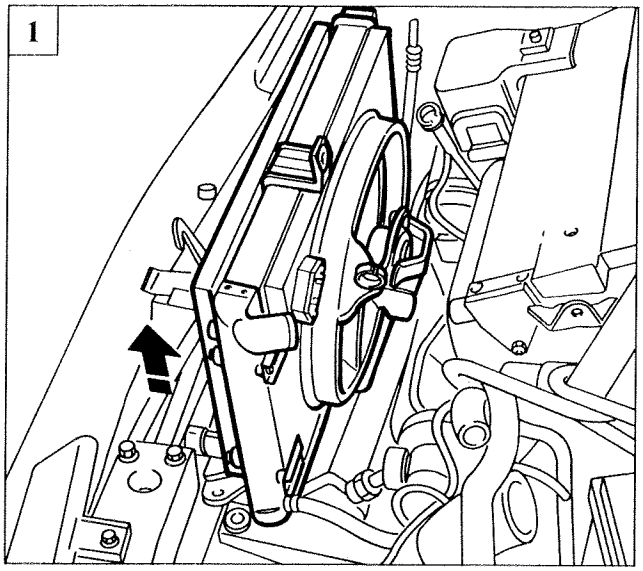

P3U05DJ01

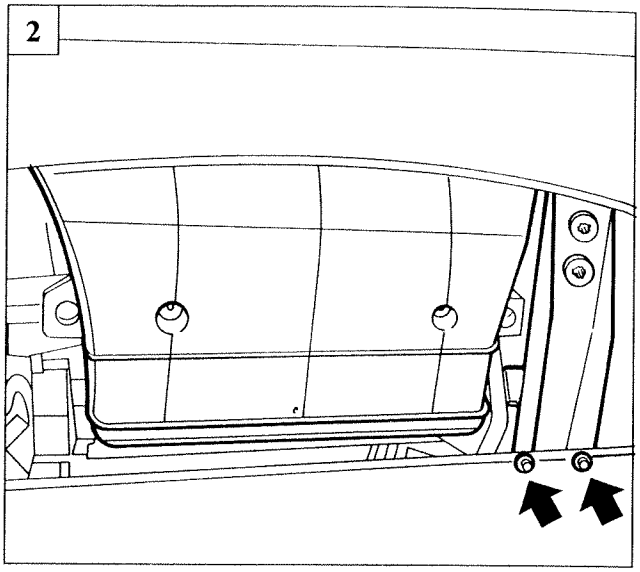

P3U05DJ02

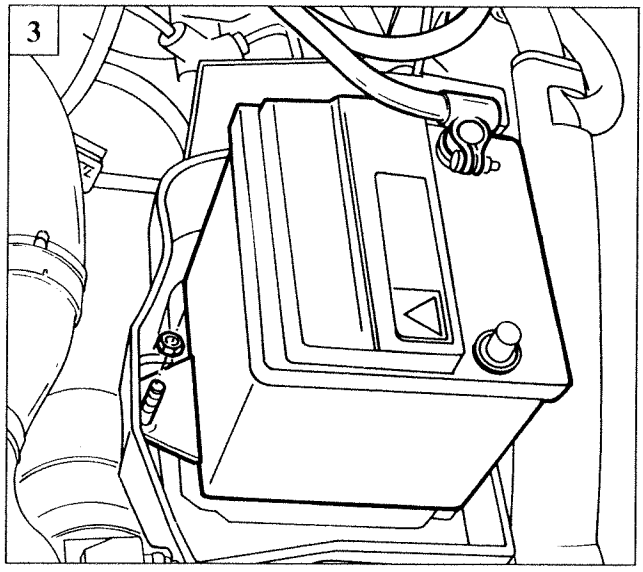

P3U05DJ03

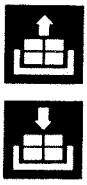

1. Lift out radiator-condenser-engine cooling fan assembly and dehydrating filter.
2. Remove oil radiator bracket shown in figure in order to allow removal of shroud indicated.
3. Remove battery.
4. Remove battery holder by undoing screws shown in figure.
5. Disconnect electrical connections shown in figure from automatic idle speed adjustment valve, throttle valve position sensor and absolute pressure sensor.

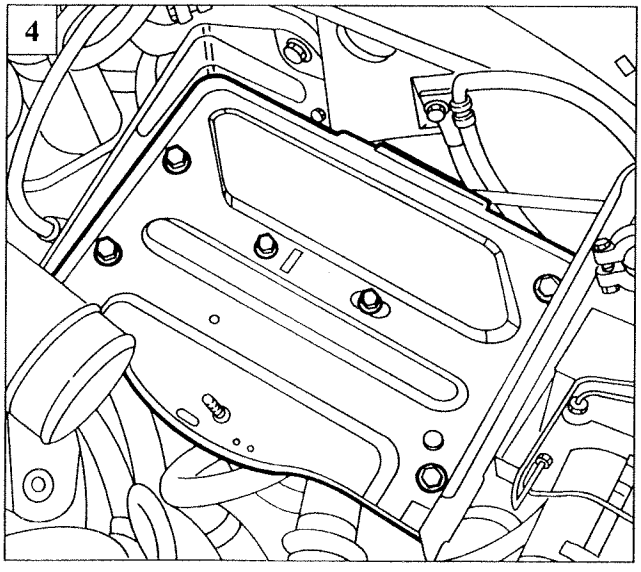

P3U05DJ04

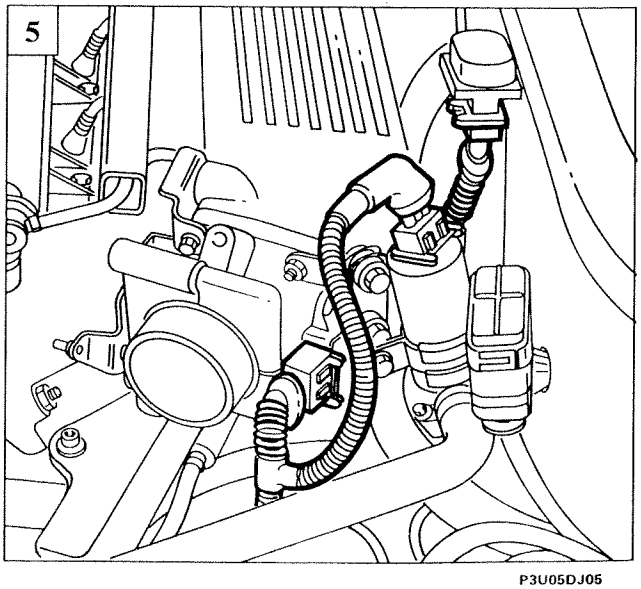

P3U05DJ05

Copyright Fiat Auto

10.

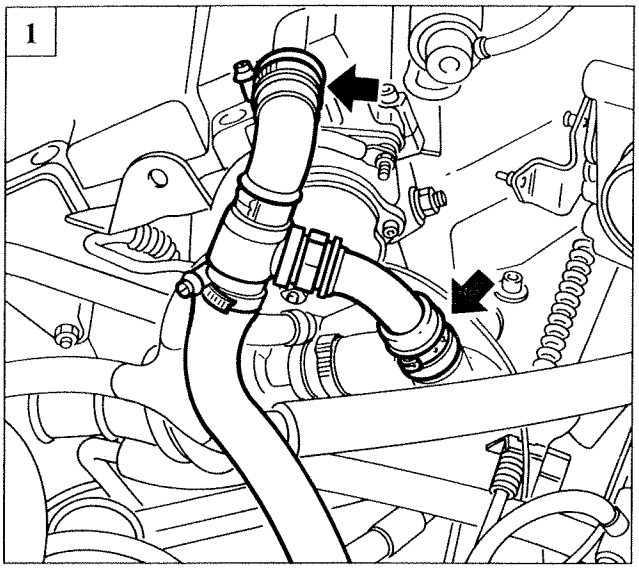

P3U06DJ01

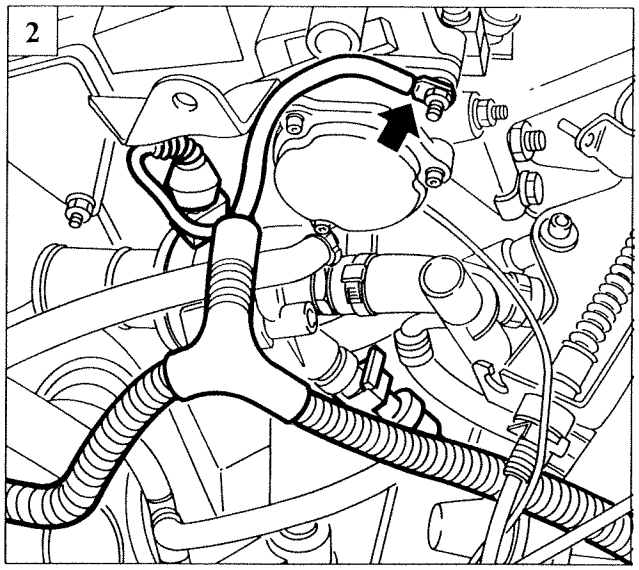

P3U06DJ02

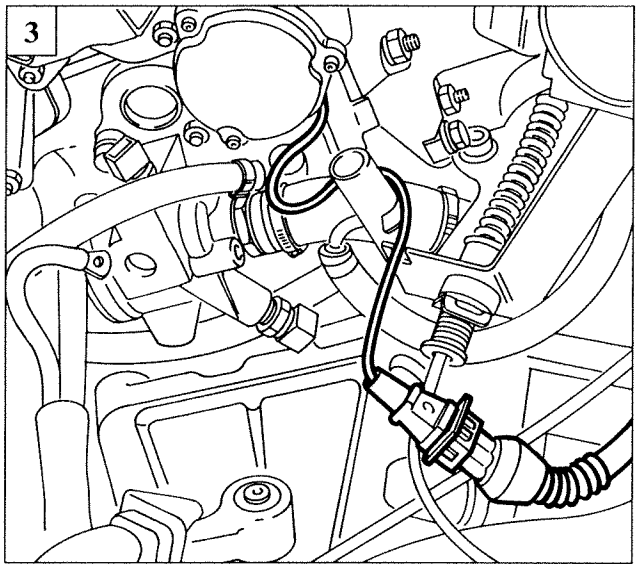

P3U06DJ03

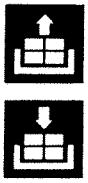

1. Remove oil vapour recovery lines shown in figure.
2. Disconnect electrical connections from thermostat and earth leads from injection timing sensor.
3. Disconnect electrical connection from injection timing sensor.
4. Disconnect accelerator cable from butterfly valve case.
5. Disconnect battery positive lead (and starter motor) from connector block.

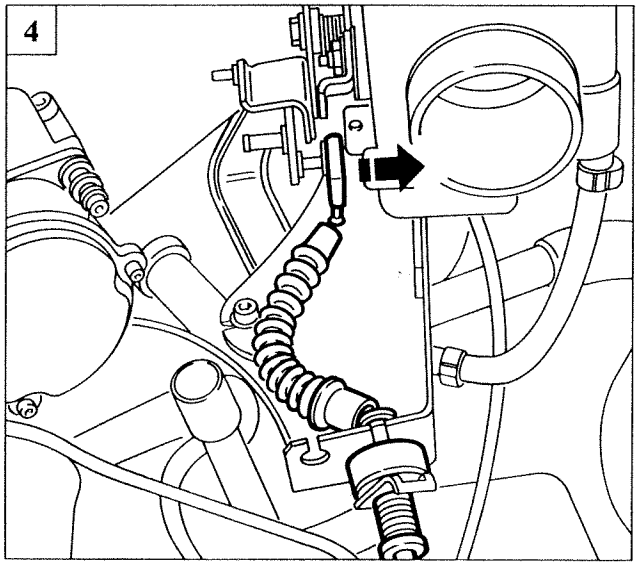

P3U06DJ04

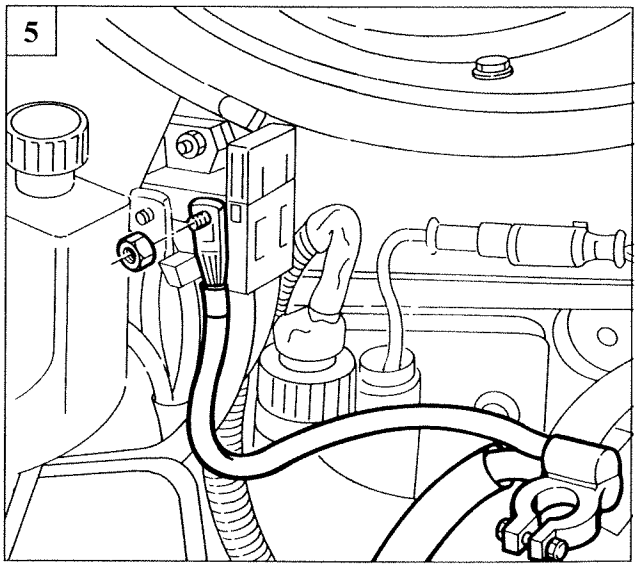

P3U06DJ05

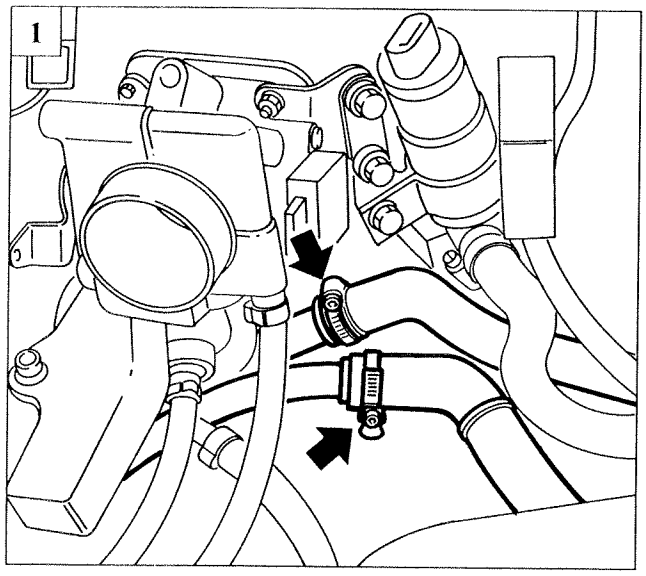

P3U07DJ01

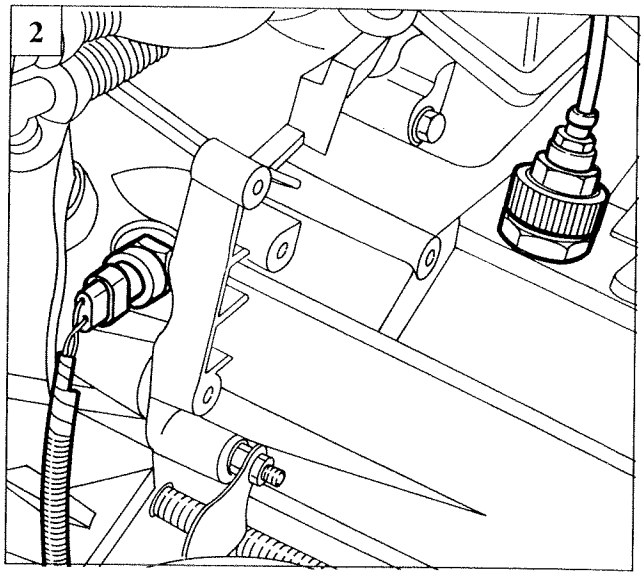

P3U07DJ02

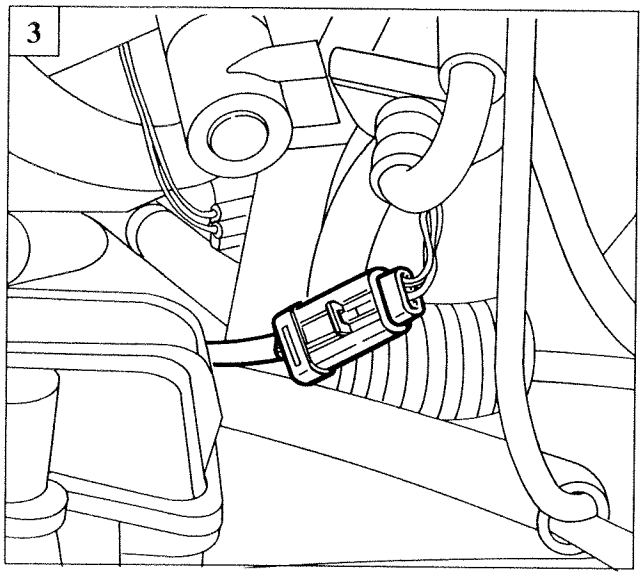

P3U07DJ03

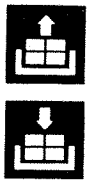

1. Disconnect coolant delivery and return lines from heater radiator.
2. Disconnect electrical connection of reversing light switch and reverse engagement inhibition cable.
3. Disconnect electrical connection for speedometer sensor.
4. Disconnect vacuum intake pipe from brake servo.
5. Release reaction rod by removing bolt indicated.

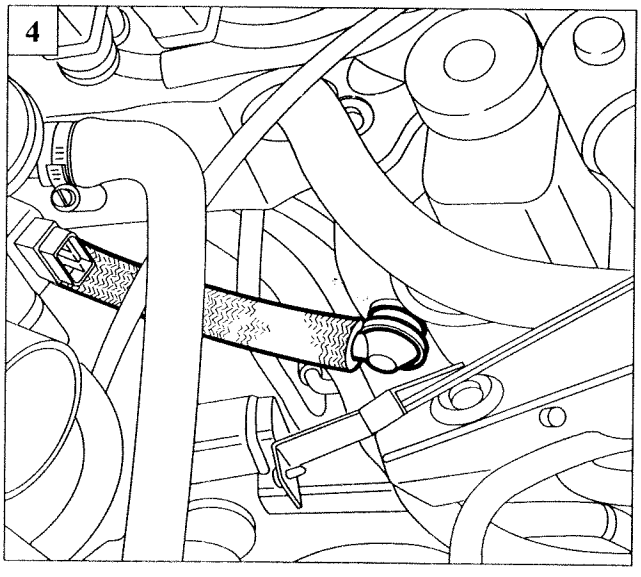

P3U07DJ04

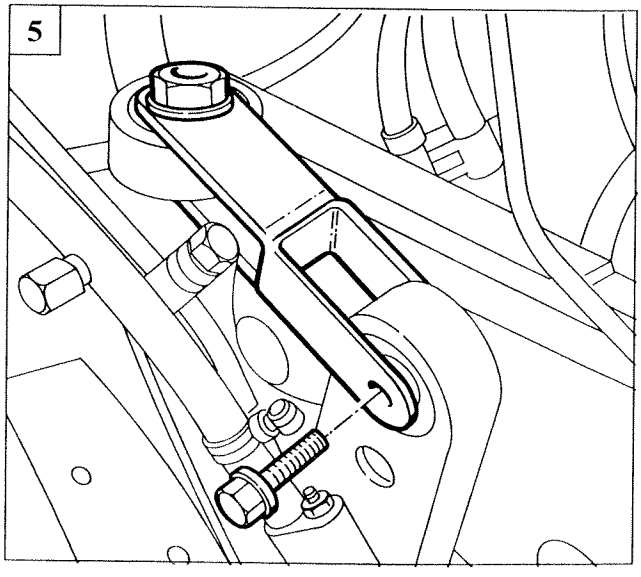

P3U07DJ05

Copyright Fiat Auto

10.

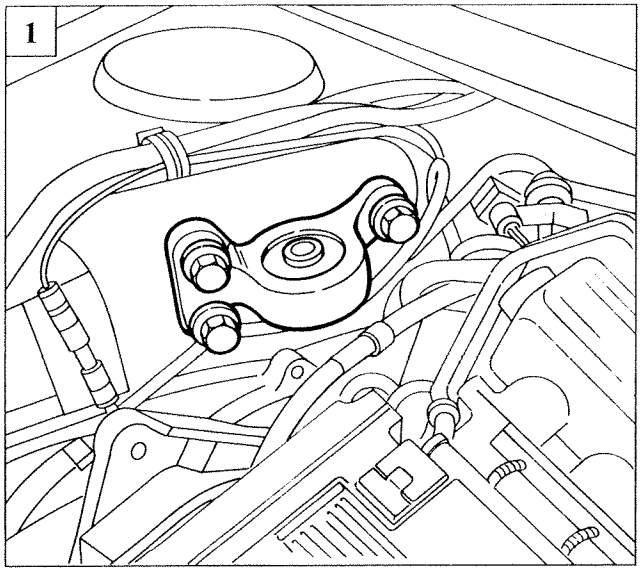

P3U08DJ01

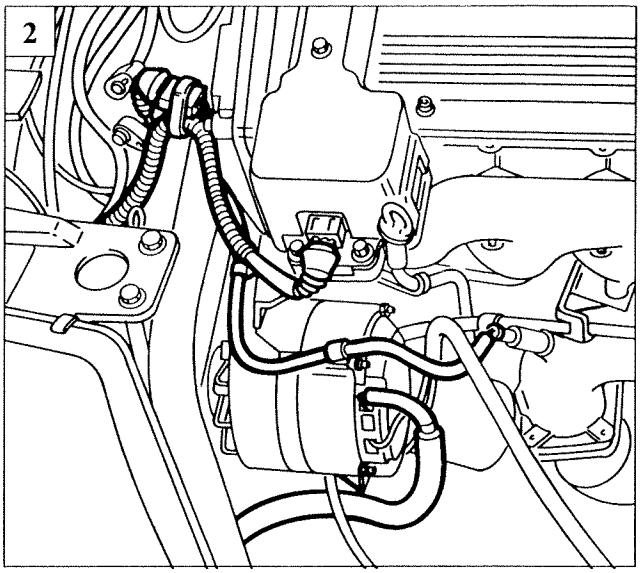

P3U08DJ02

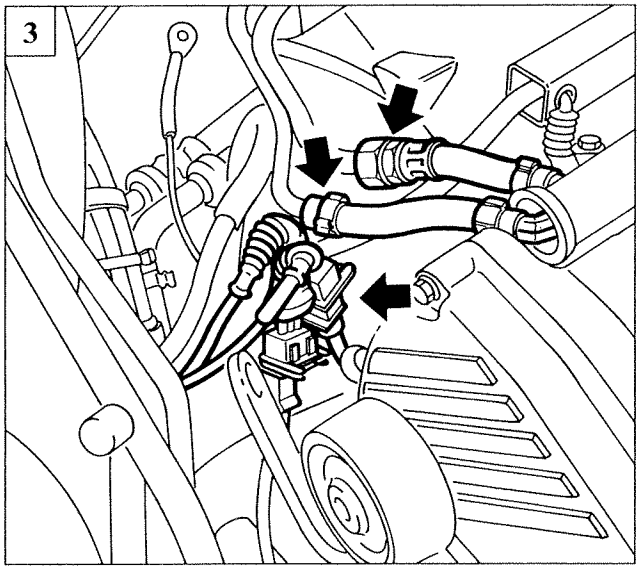

P3U08DJ03

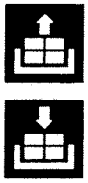

1. Remove reaction rod retaining bracket by removing screws retaining bracket to body.
2. Disconnect electrical connections for lambda probe, and supply leads to ignition coil leads, alternator and oil pressure switch, then disconnect electrical wiring from alternator.
3. Disconnect electrical connections for knock sensor and t.d.c. sensor, then disconnect fuel inlet and outlet lines.
4. Open wiring channel shown in the figure, the disconnect electrical connections from fuel injectors.
5. Remove evaporation control system lines shown in the figure from the intake manifold.

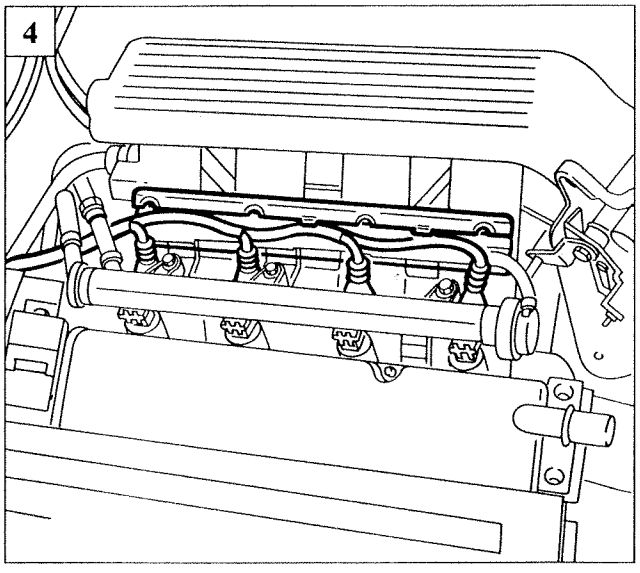

P3U08DJ04

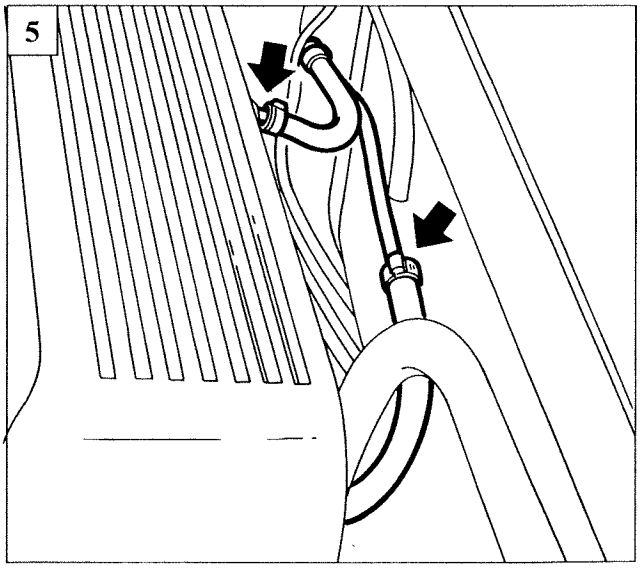

P3U08DJ05

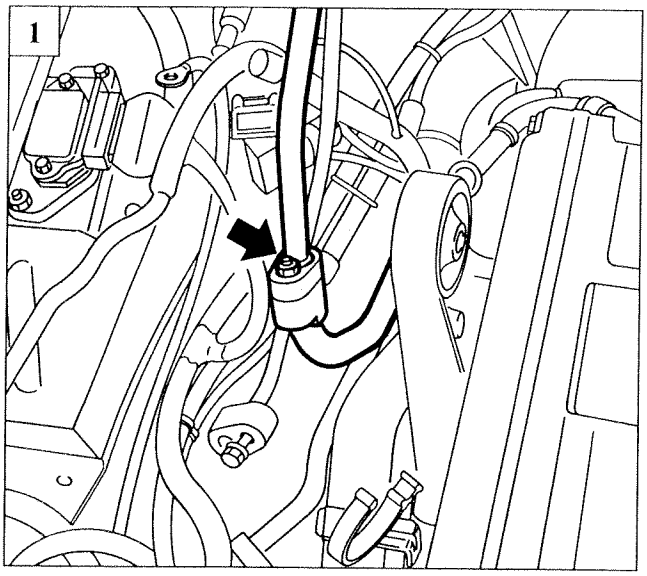

P3U09DJ01

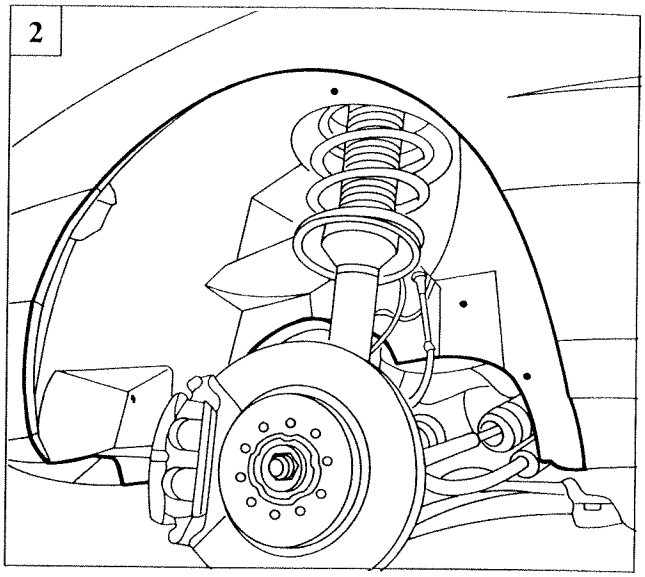

P3U09DJ02

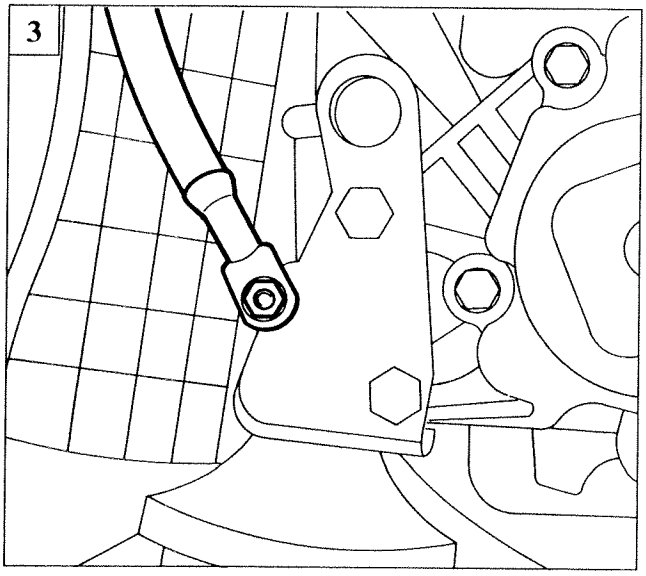

P3U09DJ03

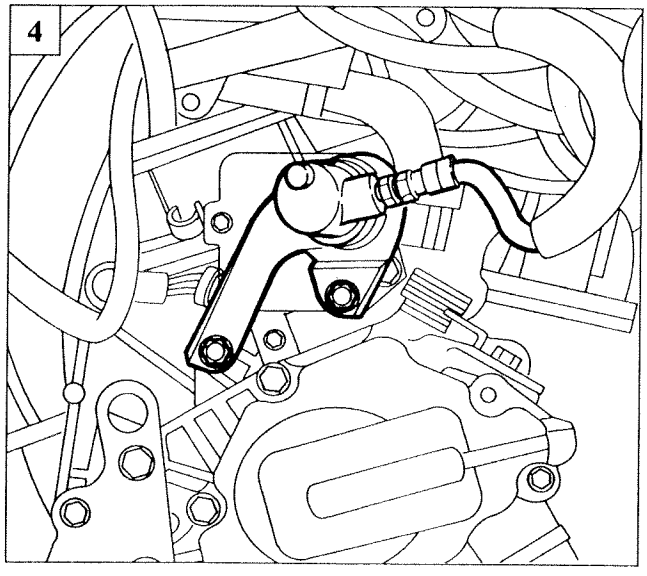

P3U09DJ04

1. Disconnect fitting for line connecting compressor to condenser shown in figure.

Seal disconnected lines so that the air conditioning system does not absorb moisture which would impair its operation.

2. Raise lift and remove gearbox end wheel arch lining.
3. Disconnect earth lead from gearbox housing.
4. Unscrew the bolts fastening clutch cylinder together with bracket, then place to one side.

Copyright Fiat Auto

10.

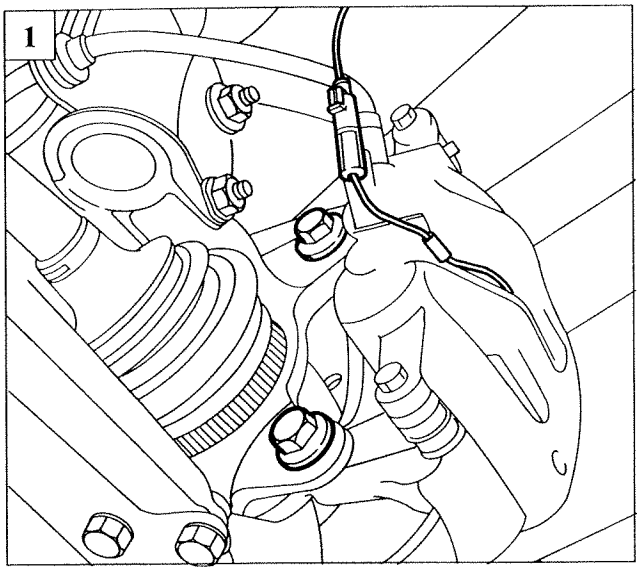

P3U10DJ01

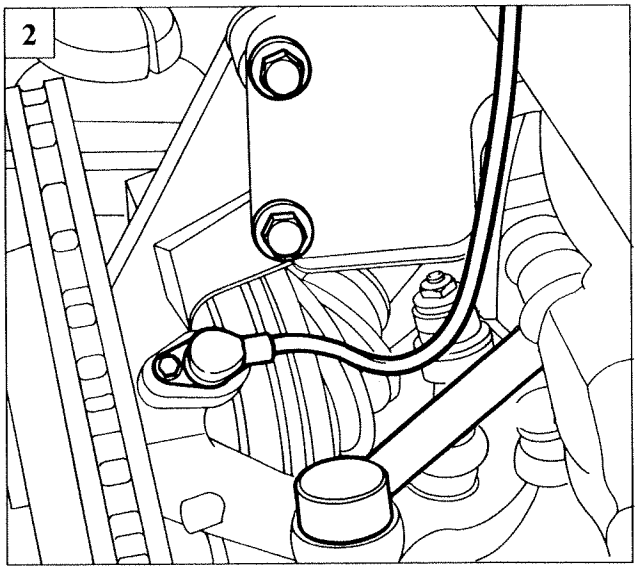

P3U10DJ02

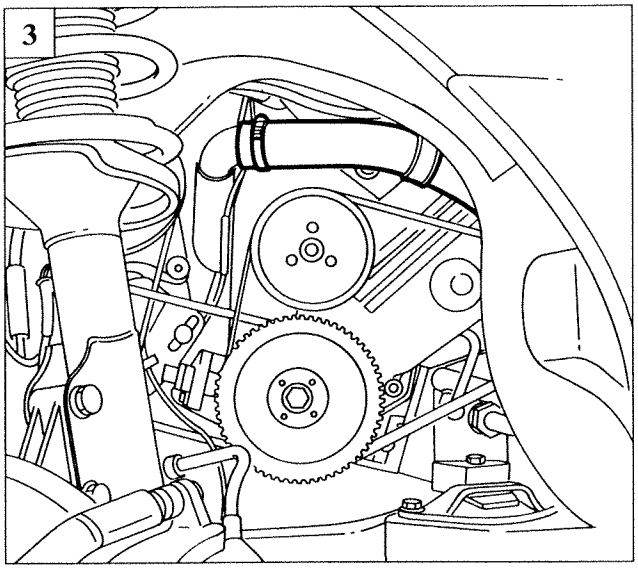

P3U10DJ03

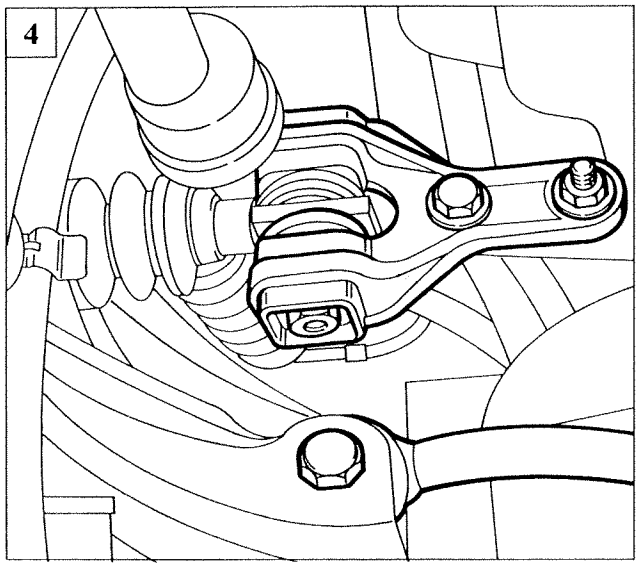

P3U10DJ04

1. Disconnect connection of brake lining wear sensor, then remove brake calliper retaining screws without disconnecting brake pipes. Secure calliper assembly in wheel arch compartment.
2. Disconnect steering link from pillar using extractor 1847038000, remove screws retaining damper to pillar and remve rpm sensor from pillar.

Repeat removal procedure for wheel arch lining, brake calliper, damper pillar and steering link at timing end.

3. Remove the coolant line connected to the expansion tank.
4. Disconnect the gearbox control linkage and disconnect reaction bracket from gearbox.

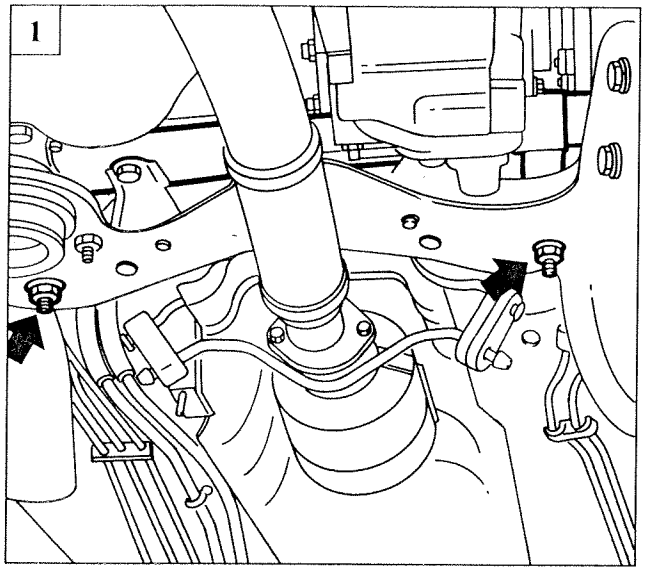

P3U11DJ01

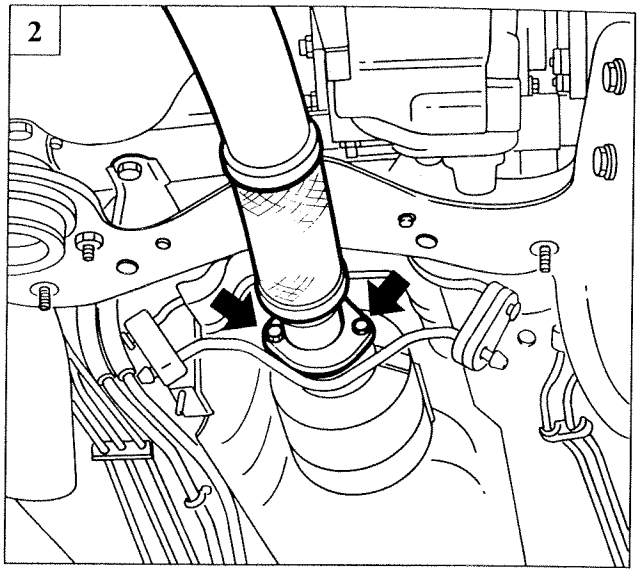

P3U11DJ02

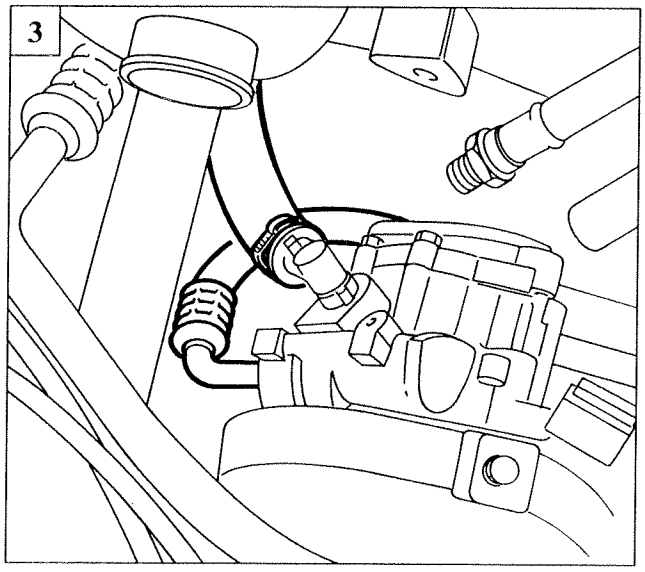

P3U11DJ03

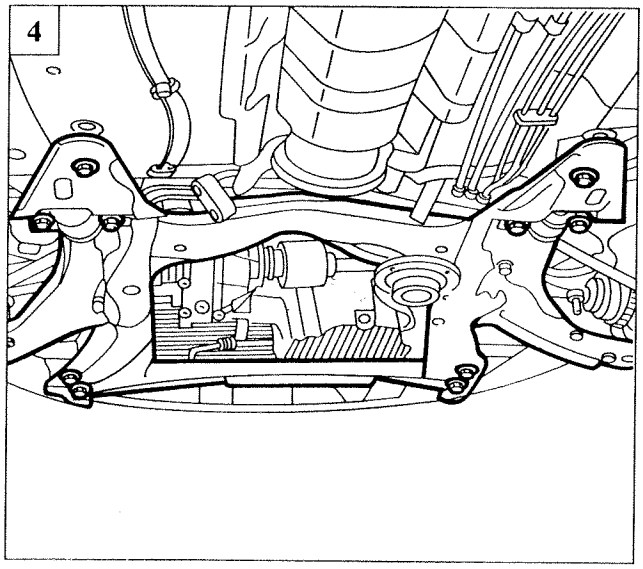

P3U11DJ04

1. Unscrew bolts retaining power steering box to front beam. Then secure box so that this remains fastened to the body once the power unit is removed.
2. Disconnect the first section of the exhaust pipe from the catalytic converter.
3. Drain the power steering fluid, then disconnect the pressure inlet line and outlet line from the power steering fluid reservoir.
4. Loosen the bolts retaining the chassis to the body.

Copyright Fiat Auto

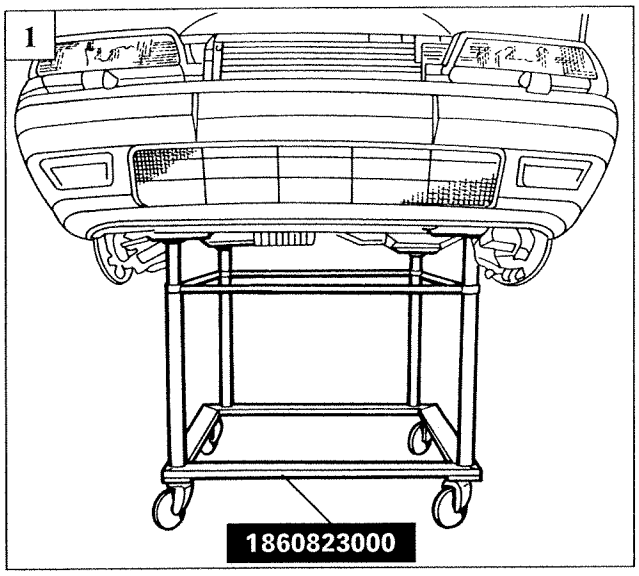

P3U12DJ01

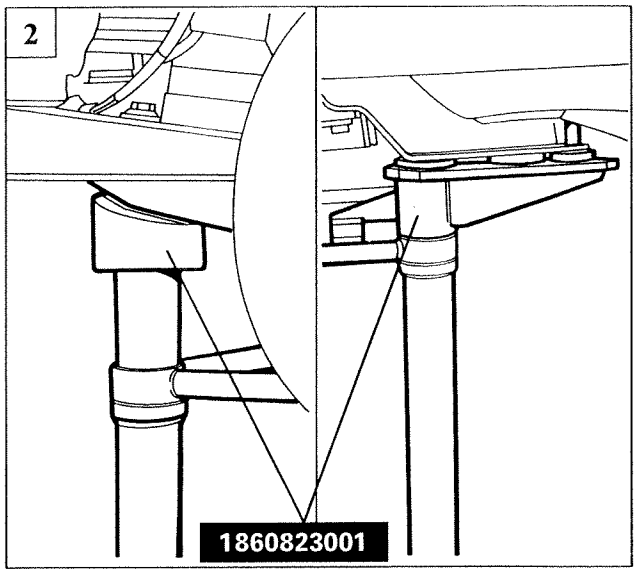

P3U12DJ02

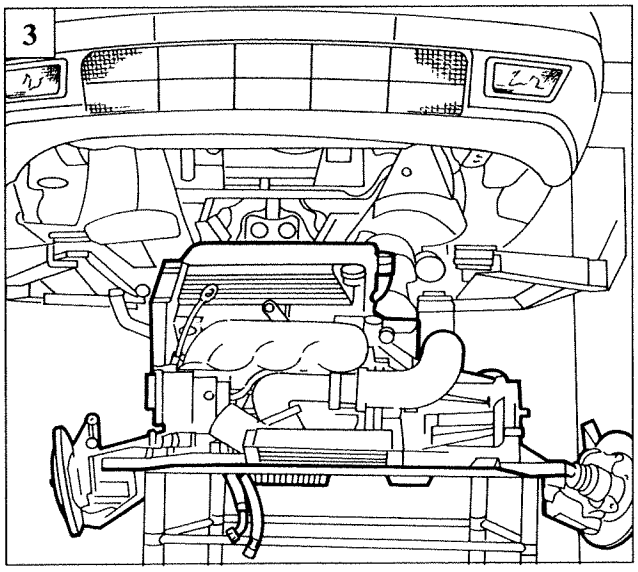

P3U12DJ03

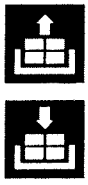

1-2. Remove the rubber blocks on body at stand retaining points. Position power unit stand 1860823000 beneath vehicle and lower lift to rest chassis on front adaptors. Centre and retain to rear adaptors (1860823001).

3. Unscrew chassis retaining bolts loosened previously, then raise vehicle.

NOTE *When refitting, reverse removal instructions. Note particularly when refitting coolant hoses, the groove in the hose must be aligned with the ridge on the rigid pipe to which it is fitted. Once refitting is complete, check chassis bolts are tightened correctly and adjust toe-in. Top up levels of coolant and power steering fluid and also bleed the power steering system. Charge the air conditioning system.*

REMOVING-REFITTING POWER UNIT WITHOUT THE AID OF TROLLEY 1860823000

Position the vehicle on a lift, disconnect the battery negative lead, remove the front wheels and proceed as follows:

- Use tool 1878077000 to undo the studs retaining the lower bonnet lining.
- Disconnect screen washer lines from sprays, then disconnect bonnet lid from hinges and upper gas damper heads.
- Drain air conditioning system using appropriate Cleaner 134 device. Connect blue and red hoses to needle valves as described in section 50 of this manual.

When draining the system, wear gloves and goggles to protect against harmful contact with jets of R 134 A.
To facilitate the coolant drainage operation, run the cooling system and engine for 10-15 minutes.

- Raise the vehicle, remove the lower engine bay guard and drain the coolant by undoing the lower radiator sleeve.
- Remove the expansion tank by disconnecting tank sleeves and connection.
- Remove battery, holder and rear bracket.
- Disconnect the air intake line connecting intercooler to butterfly valve case.
- Disconnect coolant sleeve connecting thermostat to radiator.
- Disconnect sleeve connecting flow meter to turbocharger.
- Remove air cleaner with flow meter.
- Unscrew screw retaining Pierburg valve.
- Disconnect connections from engine cooling fan.
- Disconnect electrical connection from three stage pressure switch, then disconnect lines leading to condenser and evaporator from dehydrating filter. Unscrew the bolts fastening dehydrating filter mount bracket.

Seal disconnected line ends to prevent dehydrating filter and air conditioning system from absorbing moisture, which could impair system operation.

- Disconnect bonnet link, then remove beam located above the radiator assembly.
- Disconnect line connecting turbocharger to intercooler, then remove the intercooler.
- Disconnect the turbocharger cooling line, unscrew lower screws retaining radiator assembly, then lift out radiator-condenser-fan assembly and dehydrating filter.
- Remove air shroud to oil radiator.
- Disconnect the upper battery holder mount and ABS control unit bracket.
- Disconnect connections shown in the figure from the automatic idle speed adjustment valve and potentiometer on the butterfly valve case.
- Remove the three-way line (oil vapour recovery), then disconnect electrical connections from the thermostat, injection timing sensor and earth leads.
- Disconnect accelerator cable from butterfly valve case.
- Disconnect battery positive lead (and starter motor) from connector block.
- Disconnect coolant inlet and outlet lines from heater.
- Disconnect mileometer sensor and reverse engagement inhibition cable.
- Disconnect vacuum intake pipe from brake servo.
- Remove the reaction rod and take off the bracket.

Copyright Fiat Auto

10.

- Disconnect electrical connections to lambda probe and leads supply ignition coil alternator and oil pressure switch, then remove electrical wiring from alternator.
- Disconnect electrical connections from knock sensor and t.d.c. sensor, then disconnect fuel inlet and outlet lines.
- Disconnect electrical connections from fuel injectors, then remove vacuum lines from inlet manifold.
- Disconnect fitting for line connecting compressor to condenser



Seal disconnected lines so that the air conditioning system does not absorb moisture which would impair its operation.

- Remove gearbox end wheel arch lining.
- Disconnect earth lead from gearbox housing, then unscrew the bolts fastening clutch cylinder together with bracket.
- Unscrew screws retaining left half-axle and loosen screws retaining pillar to damper.
- Remove steering link using extractor 1847038000.
- Remove the screws retaining the pillar to the damper, then turn the pillar so that the drive shaft comes out. Secure the drive shaft so that it does not impede power unit removal.



Repeat removal procedure for wheel arch lining, brake calliper, damper pillar and steering link at timing end.

- Remove the coolant line connected to the expansion tank.
- Disconnect the gearbox control linkage and disconnect reaction bracket from gearbox.
- Drain gearbox oil.
- Remove first exhaust pipe section by disconnecting from catalytic converter and turbocharger.
- Drain the power steering fluid, then disconnect the pressure inlet line and outlet line from the power steering fluid reservoir.
- Loosen gearbox and timing end engine mounts.
- Position universal hook 1860592000 in attachment brackets on power unit, then use a lifting hook to put the power unit under slight tension.
- Remove the engine mount fastenings, then carefully lift out the power unit.

With the power unit standing on a platform and supported by a universal hook and hoist, remove the following:

- exhaust manifold with turbocharger;
- alternator;
- air conditioner compressor;
- power steering pump;
- starter motor;
- gearbox;
- clutch - plate - pressure plate
- intermediate drive shaft.

- When refitting, align driven plate using locating tool and reverse removal procedure. Take care when refitting rubber coolant hoses to ensure groove on hose is aligned with ridge on rigid coupling sleeve.

REMOVING-REFITTING AUXILIARY DRIVE BELT

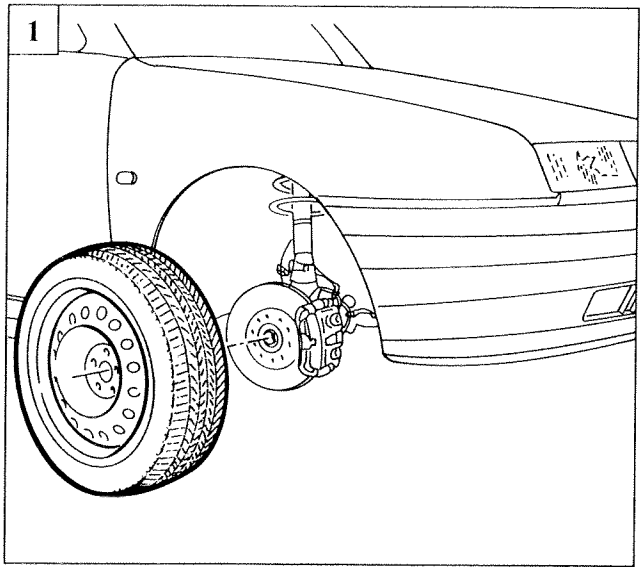

P3U15DJ01

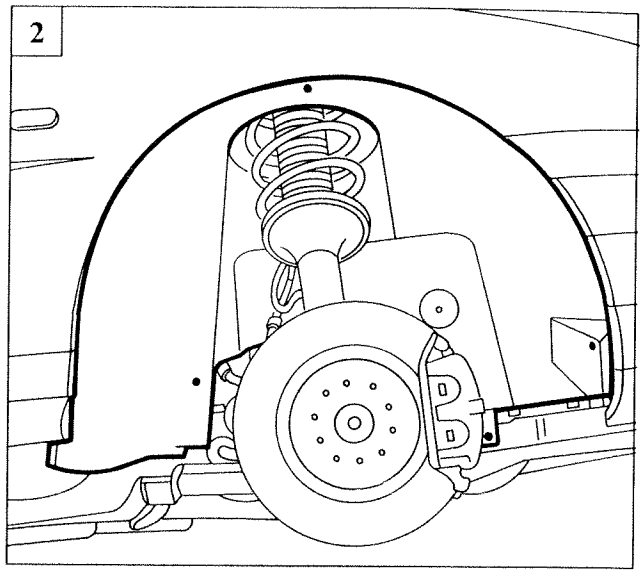

P3U15DJ02

1. Position vehicle on lift and remove right hand front wheel.
2. Remove the right hand wheel arch lining in order to gain access to auxiliary unit belt.

Check tension and condition of auxiliary unit drive belt and in particular for cracks, tears, surface wear (which looks smooth and shiny) and dry or hardened parts that could lead to loss of grip. If one of the above defects is found, replace the belt as described below:

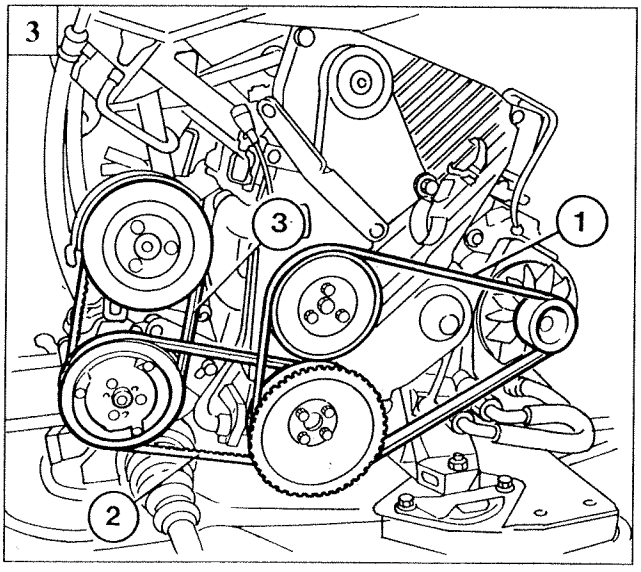

P3U15DJ03

3. View of auxiliary unit belt fitted on vehicle:

   1. Alternator drive belt - coolant pump.
   2. Air conditioner compressor drive belt.
   3. Power steering pump drive belt.

Avoid the belt coming into contact with oil or solvent that could impair the flexibility of the rubber with a consequent loss of grip

Copyright Fiat Auto

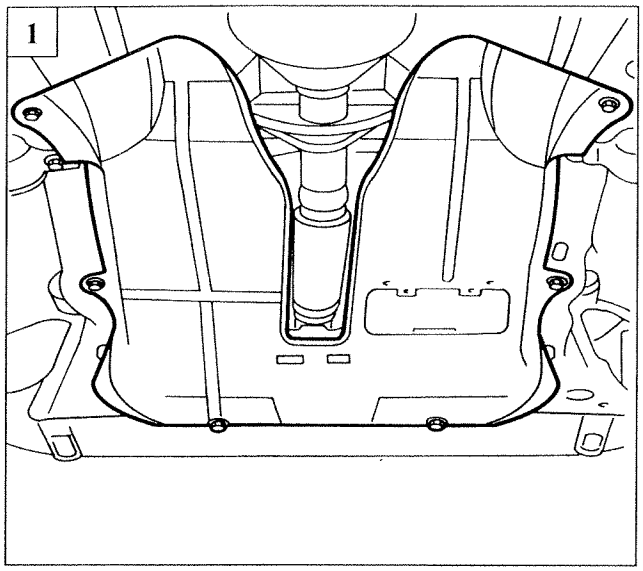

P3U01DJ02

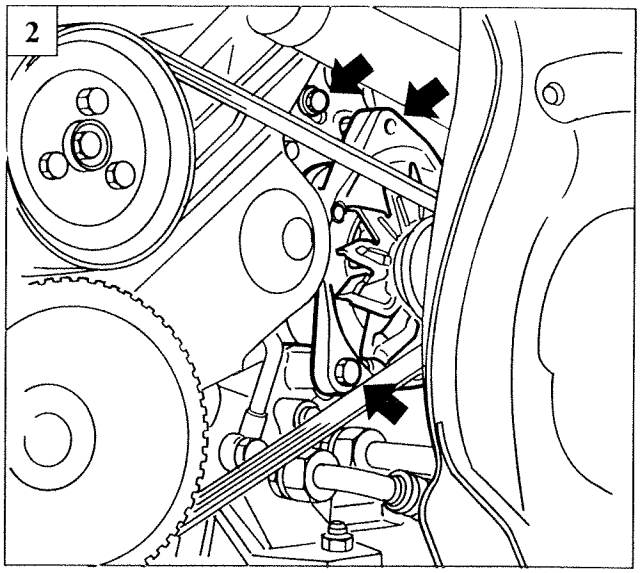

P3U16DJ01

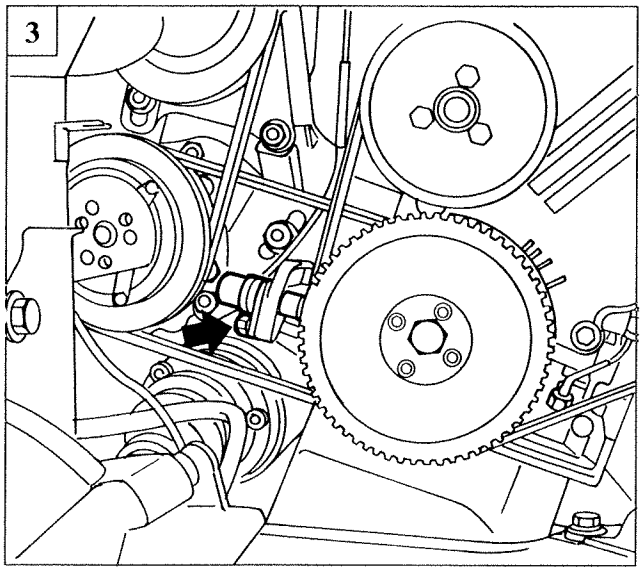

P3U16DJ02

REMOVING-REFITTING ALTERNATOR - COOLANT PUMP DRIVE BELT

1. Remove the lower engine bay guard by unscrewing screws shown in figure.
2. Loosen alternator retaining screws in order to slacken belt tension.
3. Remove t.d.c. sensor retaining screw
4. Prise the belt off the pulleys.

Fitting alternator drive belt

5. Reposition the belt and tension by tightening alternator retaining bolts. Use tool 1895762000 to check that tension is 52 - 67 daN within 30 minutes of fitting a new belt. Refit parts removed beforehand.

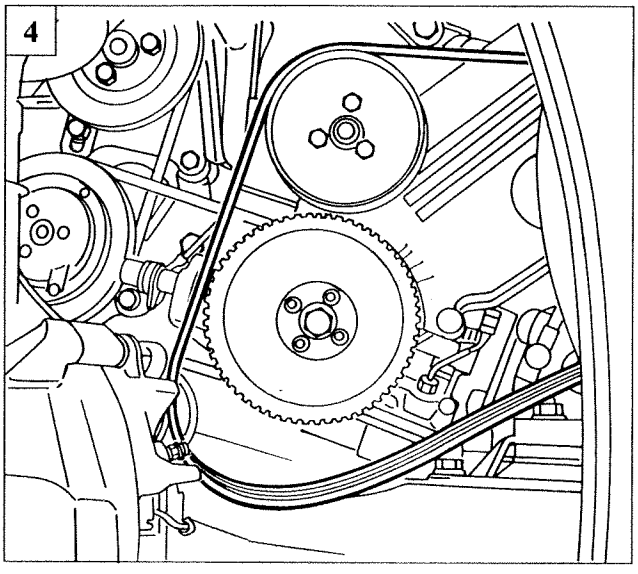

P3U16DJ03

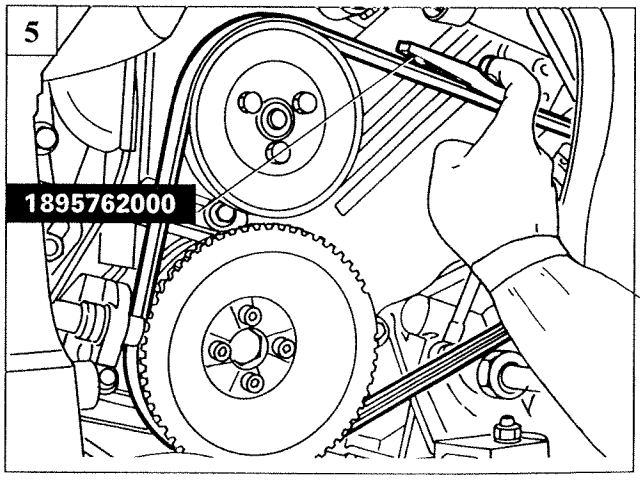

P3U16DJ04

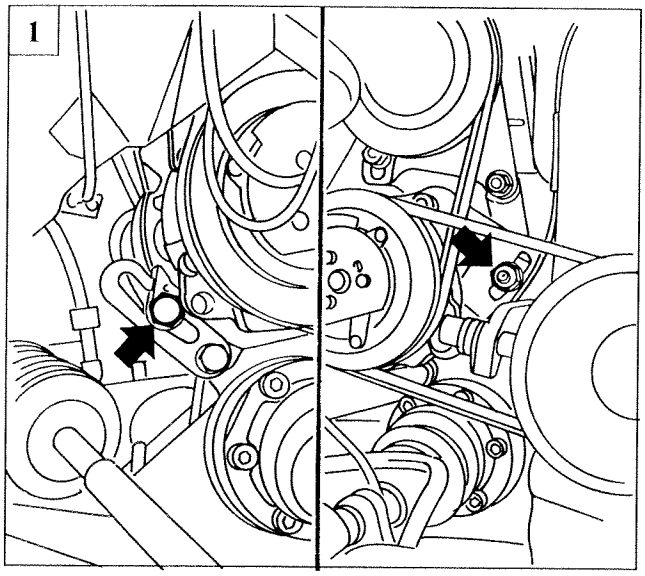

P3U17DJ01

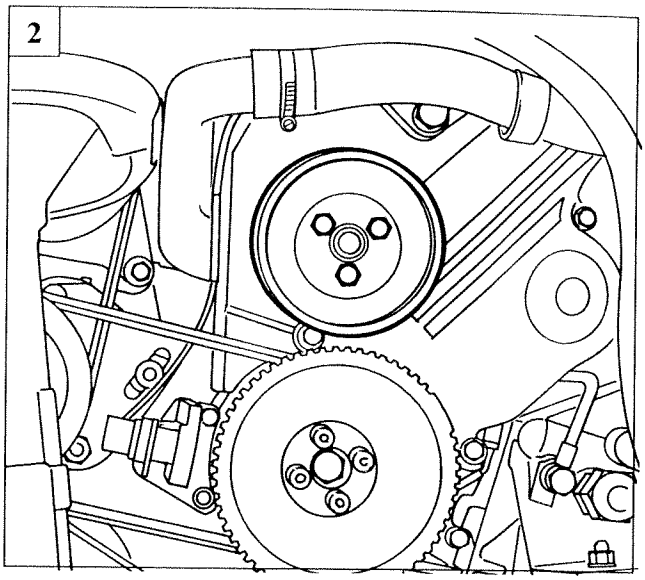

P3U17DJ02

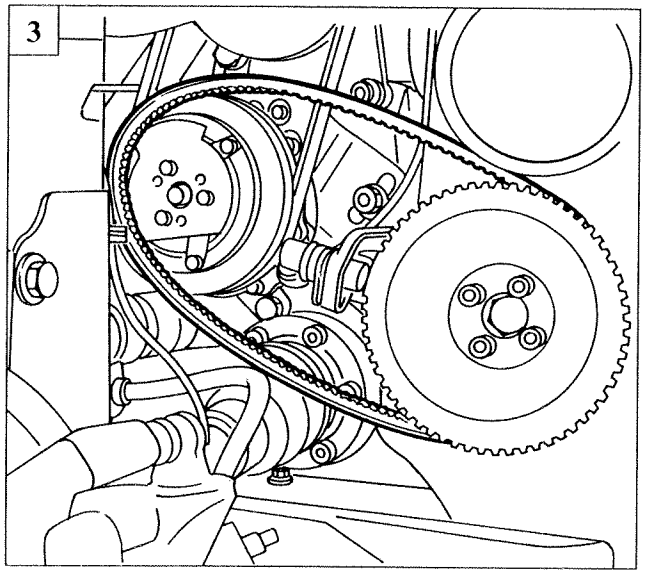

P3U17DJ03

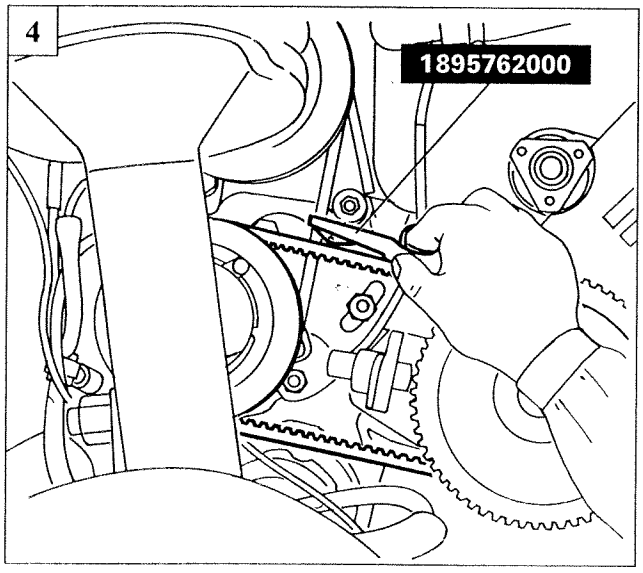

P3U17DJ04

REMOVING-REFITTING AIR CONDITIONER COMPRESSOR DRIVE BELT

To gain access to the compressor drive belt, remove the alternator drive belt as described in the previous section. Before slackening alternator drive belt tension, loosen coolant pulley retaining bolts.

1. Slacken tension of compressor retaining bolts in order to take tension off drive belt.
2. Remove coolant pump pulley in order to allow removal of the compressor drive belt.
3. Remove the air conditioner compressor drive belt.

Fitting compressor drive belt

4. Reposition the belt and tension by tightening compressor retaining bolts. Use tool 1895762000 to check that tension is between 50 - 65 daN within 30 minutes of fitting the belt.

Refit parts removed previously and retension alternator drive belt.

Copyright Fiat Auto

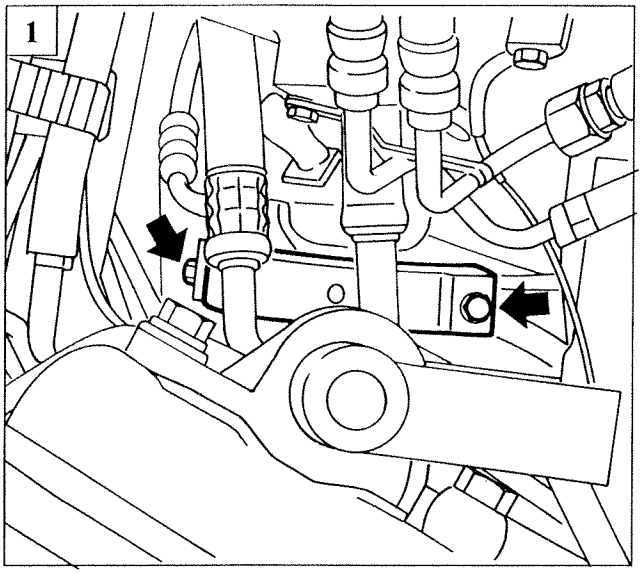

P3U18DJ01

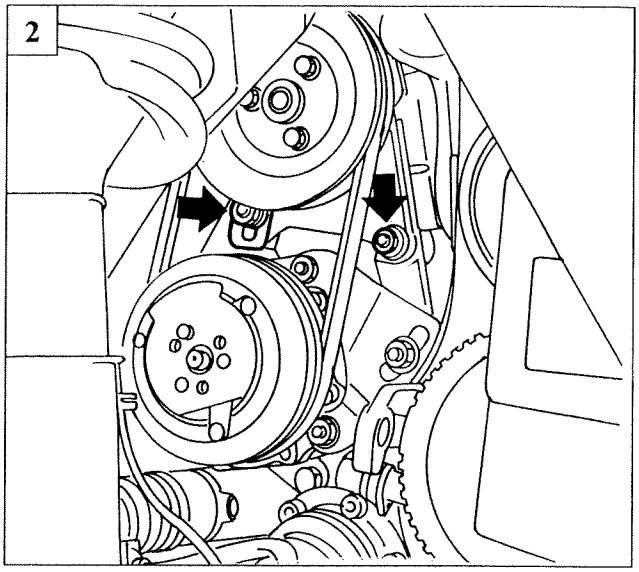

P3U18DJ02

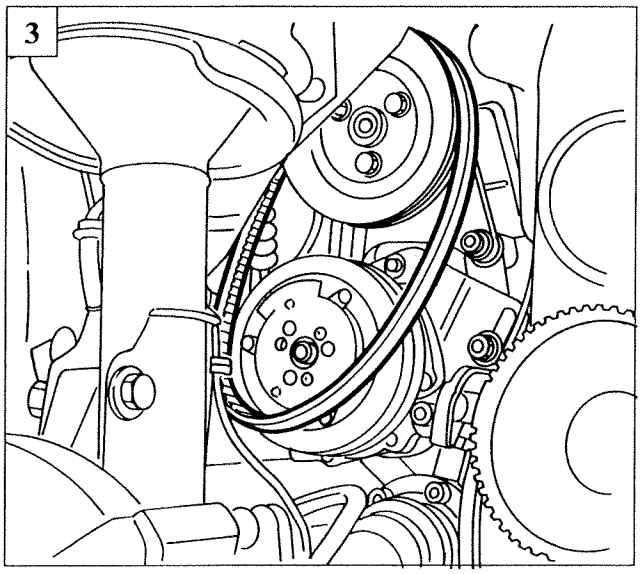

P3U18DJ03

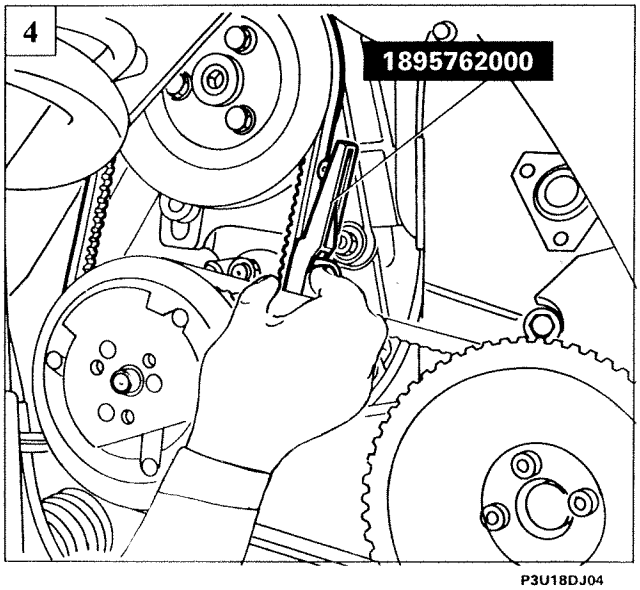

P3U18DJ04

REMOVING-REFITTING POWER STEERING PUMP DRIVE BELT

To remove the power steering pump drive belt, firstly remove the compressor drive belt by prising off compressor pulley in order to leave the alternator drive belt in place.

1. Working from above the engine bay, remove the power steering pump belt protective panel.
2. Loosen the power steering pump retaining bolts in order to slacken tension of drive belt.
3. Prise belt off pulleys.

Refitting power steering pump drive belt

4. Position the power steering pump drive belt, position the compressor drive belt and adjust tension by tightening compressor retaining screws as described in the previous section. Adjust power steering pump drive belt tension by tightening pump screws. Use tool 1895762000 to check that tension is between 50 - 65 daN within 30 minutes of fitting the belt. Refit parts removed previously.

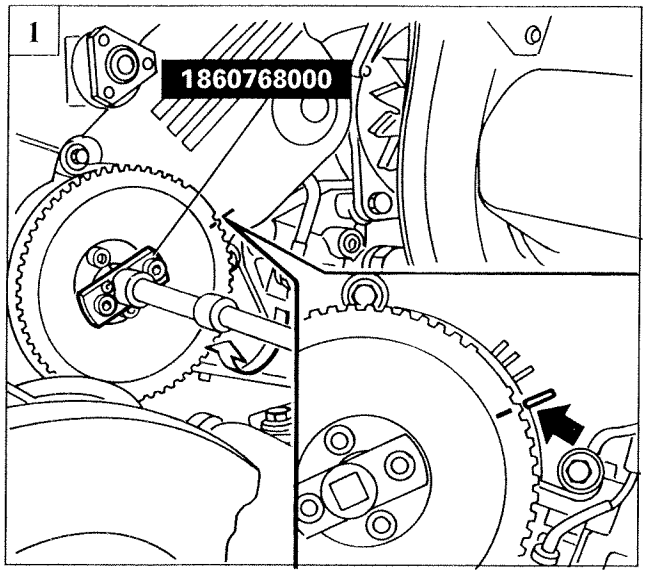

P3U19DJ01

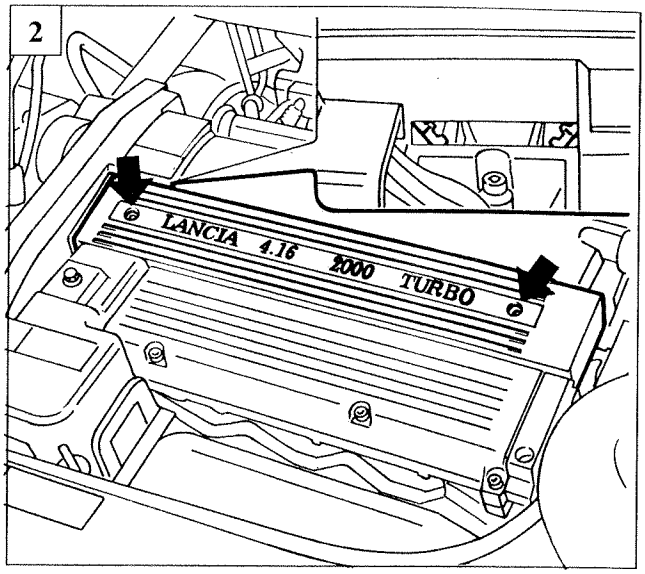

P3U19DJ02

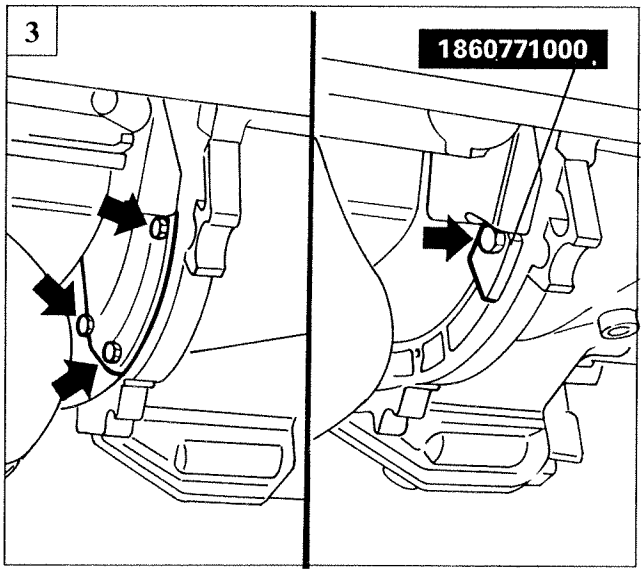

P3U19DJ03

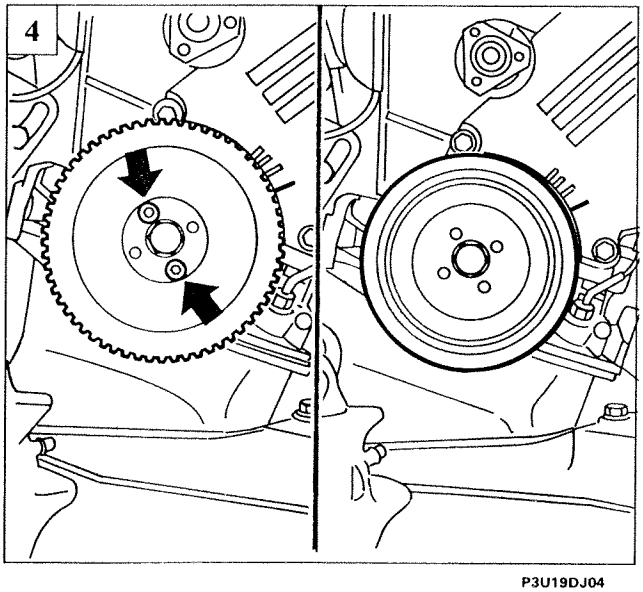

P3U19DJ04

REMOVING-REFITTING COUNTER-ROTATING SHAFT DRIVE BELT

Every 30,000 km, check toothed belt condition visually. Replace when the belt is soaked with oil or coolant or if it shows signs of cracks or broken teeth, is frayed or teeth are worn. Always replace belt every 105,000 km.

To remove counter-rotating shaft drive belt, first remove alternator and compressor drive belt as described in the previous sections.

1. Remove the four screws retaining the toothed pulley to the crankshaft, then position tool 1860768000 to turn crankshaft and fasten tool by means of two service screws. Turn pulley until the reference mark on the surface is aligned with the reference mark on the plastic cover protecting the timing belt and counter-rotating shaft belt.

2. Remove the spark plug cover and check that the reference marks on the rear of the pulleys correspond to the lower edges of the slot on the cam cover.

3. Remove the lower flywheel cover and position flywheel retainer 1860771000 as shown in the figure.

4. Remove tool 1860768000, then unscrew the remaining screws to remove the toothed pulley on the crankshaft complete with the underlying alternator and compressor belt drive pulleys.

Copyright Fiat Auto

10.

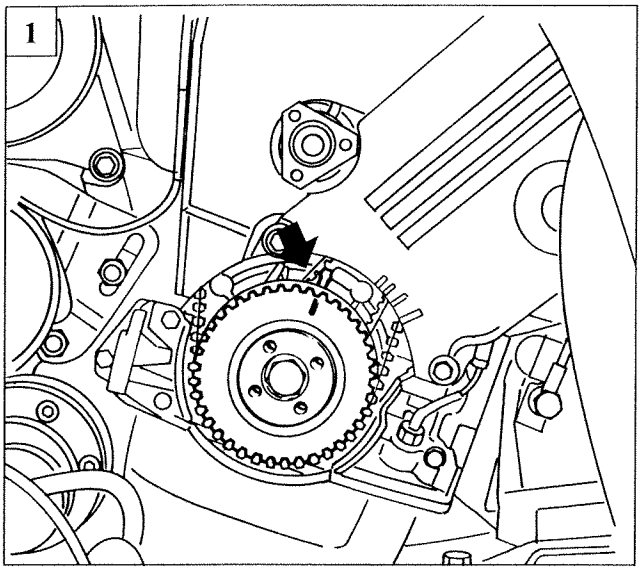

P3U20DJ01

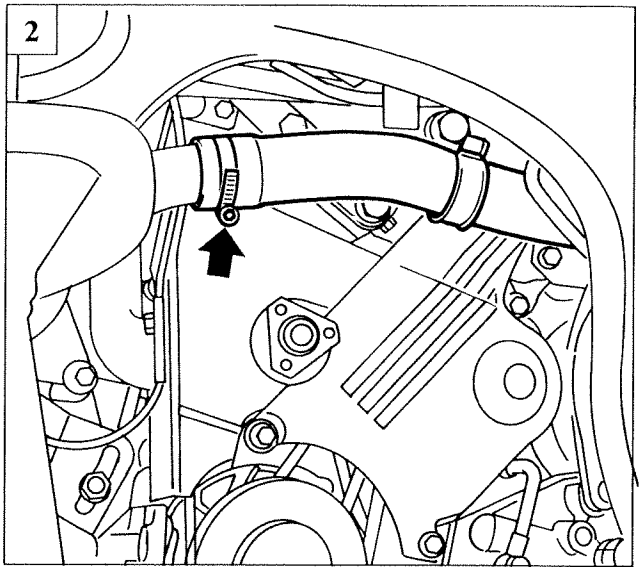

P3U20DJ02

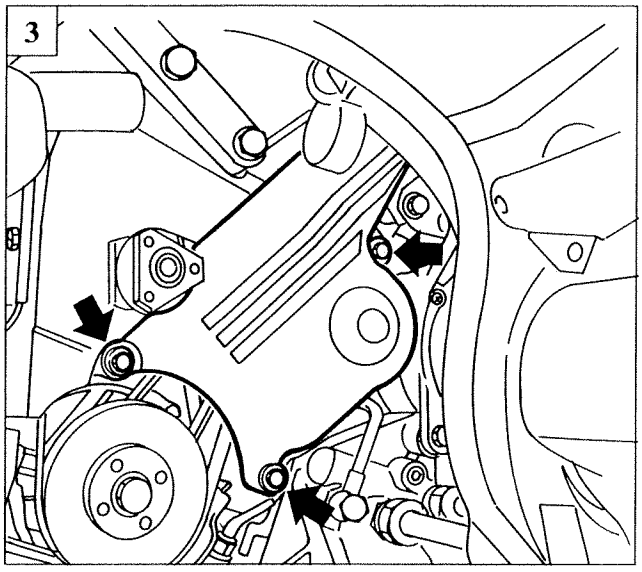

P3U20DJ03

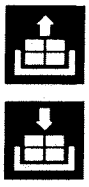

1. Check the reference on the underlying counter-rotating shaft drive pulley aligns with the groove on the front crankshaft cover shown in the figure.
2. Drain the coolant, then remove the sleeve shown in the figure.
3. Remove the lower screws retaining the timing and counter-rotating shaft belt cover.
4. Unscrew upper screws retaining timing and counter-rotating shaft belt cover, then remove cover from vehicle after disconnecting the electrical wires.
5. Remove the cover panel shown in the figure by undoing the retaining screws. Screw (1) also retains the t.d.c. sensor lead bracket.

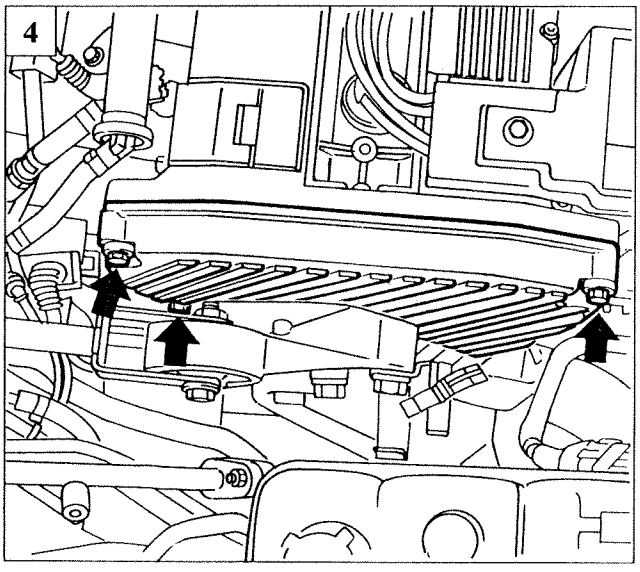

P3U20DJ04

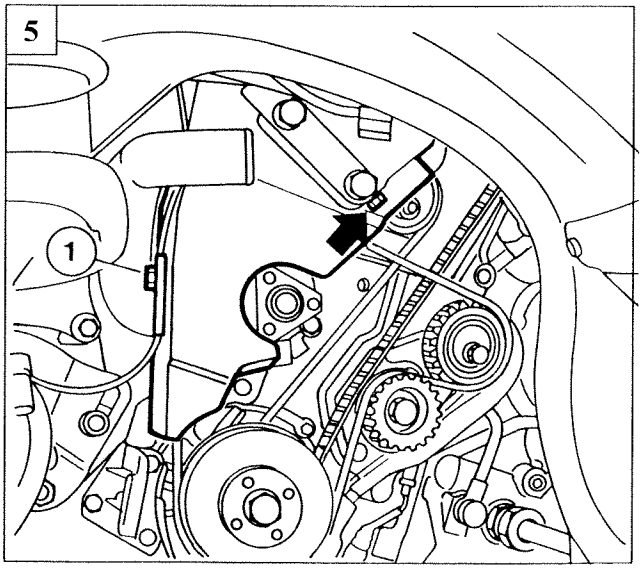

P3U20DJ05

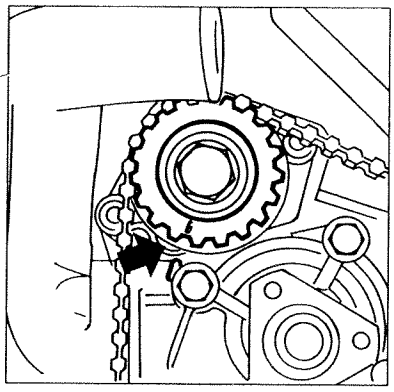

P3U21DJ02

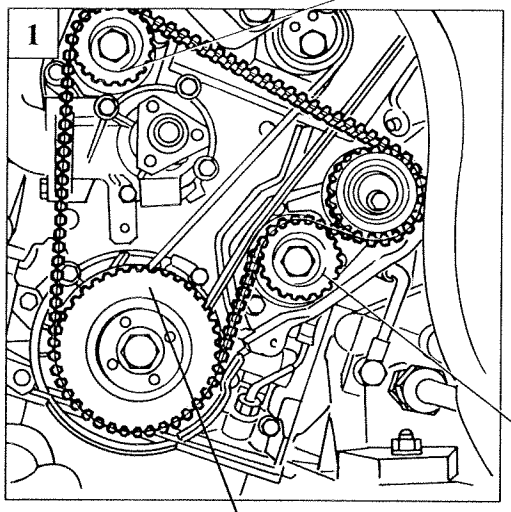

P3U21DJ01

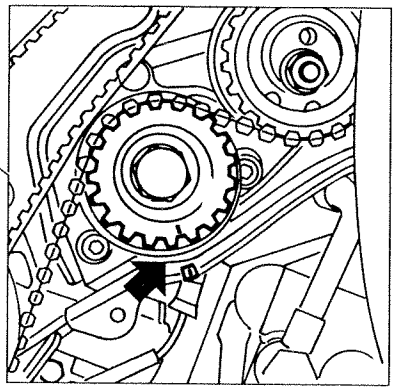

P3U21DJ03

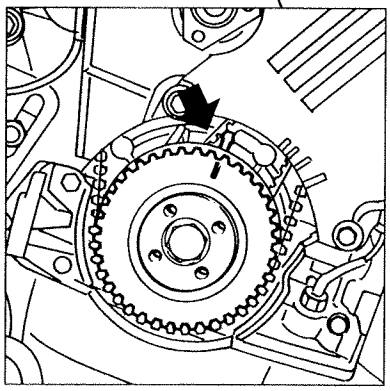

P3U21DJ04

1. Check counter-rotating shaft pulleys are positioned as shown in the figure.

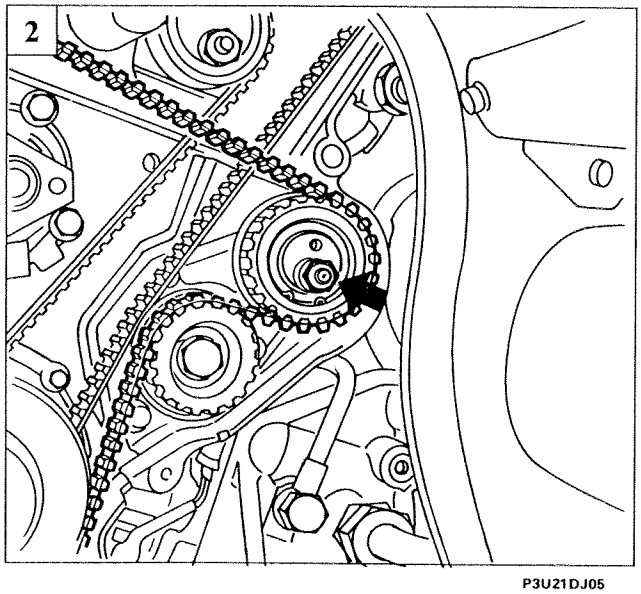

P3U21DJ05

2. Loosen the belt tensioner nut, then prise counter-rotating shaft belt off pulleys.

Copyright Fiat Auto

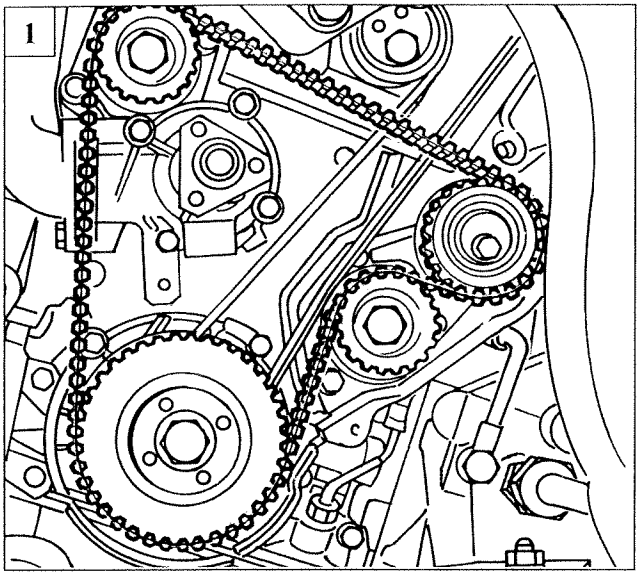

P3U22DJ01

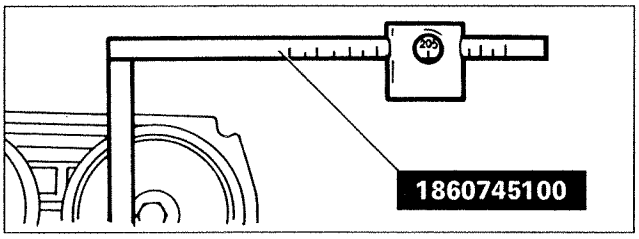

P3U22DJ03

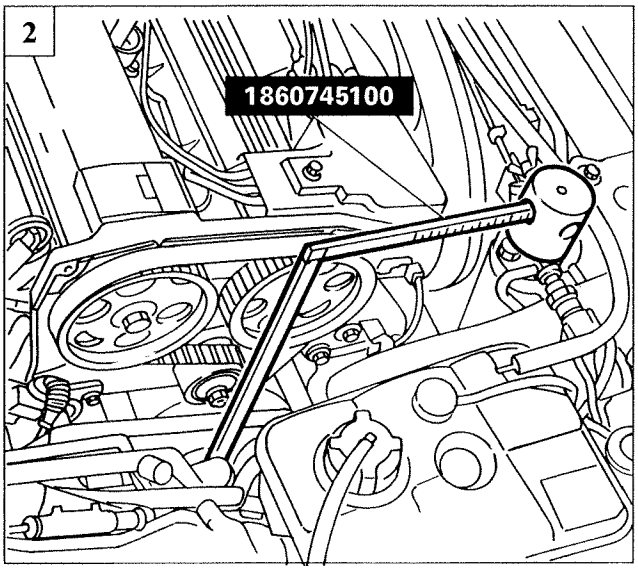

P3U22DJ02

Fitting and tensioning counter-rotating shaft belt

1. Check references on counter-rotating shaft pulleys and timing pulleys are correctly aligned as described for removal. Fit toothed belt, taking care to check all teeth mesh with all toothed pulleys. Then remove flywheel retaininer 1860771000.

NOTE *It is extremely important not to kink the toothed belt during installation because this could damage the belt material.*

2. Fit part 1860745400 to tool 1860745100 and then position the weight, without knurled part, at a distance of 205 mm along the calibrated rod and tighten. Apply the resulting tool to the belt tensioner as shown in the figure. Now adjust the joint to position the calibrated rod horizontally.
   Settle the toothed belt by turning the crankshaft twice in its direction of rotation and tighten belt tensioner retaining screw.

NOTE *During this final stage, the calibrated rod may move from its horizontal position. In this case, adjust joint again to restore the calibrated rod to its original position and repeat the operation.*

When the operation is complete, tighten nut (1) retaining belt tensioner to a torque of 2.3 daNm. Refit the parts disassembled during removal.

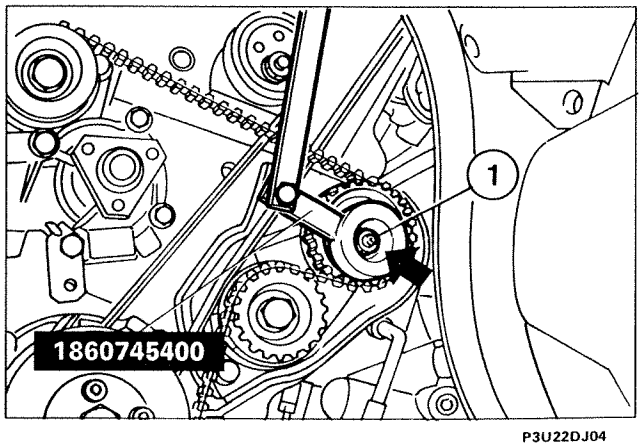

P3U22DJ04

1

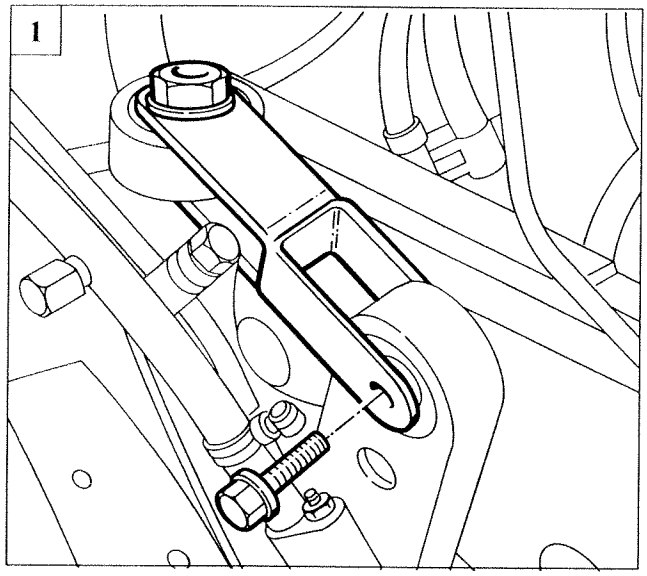

P3U07DJ05

2

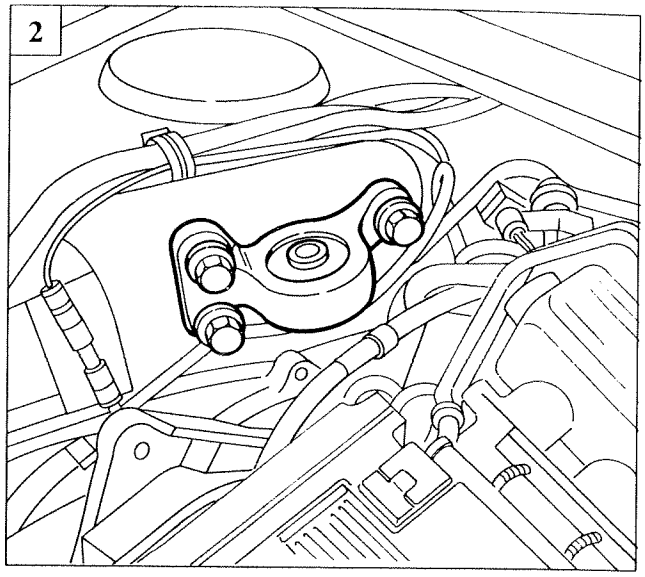

P3U08DJ01

3

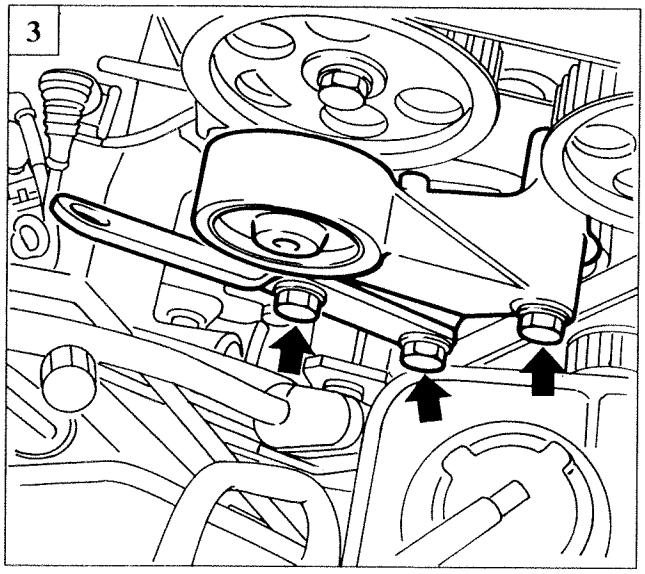

P3U23DJ01

REMOVING-REFITTING TIMING BELT

Every 60,000 km, check toothed belt condition visually. Replace when the belt is soaked with oil or coolant or if it shows signs of cracks or broken teeth, is frayed or teeth are worn. Always replace belt every 105,000 km.

To remove timing belt, first remove alternator and counter-rotating shaft drive belt as described in the previous sections.

1. Remove reaction rod by taking out bolt indicated.
2. Remove reaction rod retaining bracket by removing bolts retaining it to the body.
3. Remove engine mount shown in figure in order to allow belt removal.
4. With flywheel retainer 1860771000 fitted, remove counter-rotating shaft control pulley (anticlockwise thread).

4

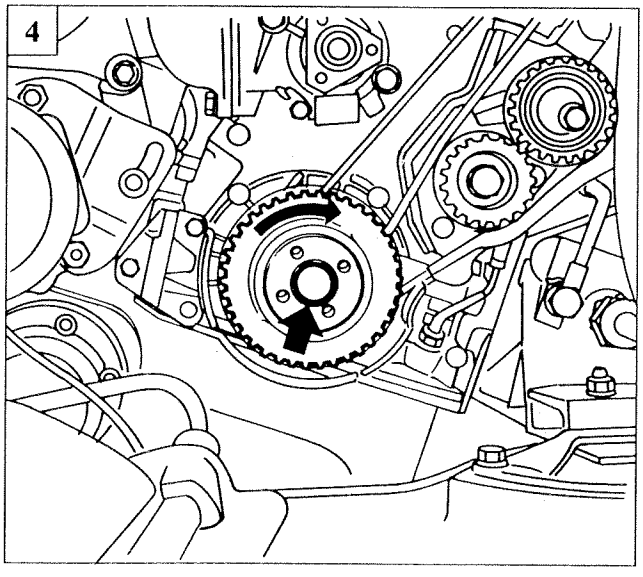

P3U23DJ02

Copyright Fiat Auto

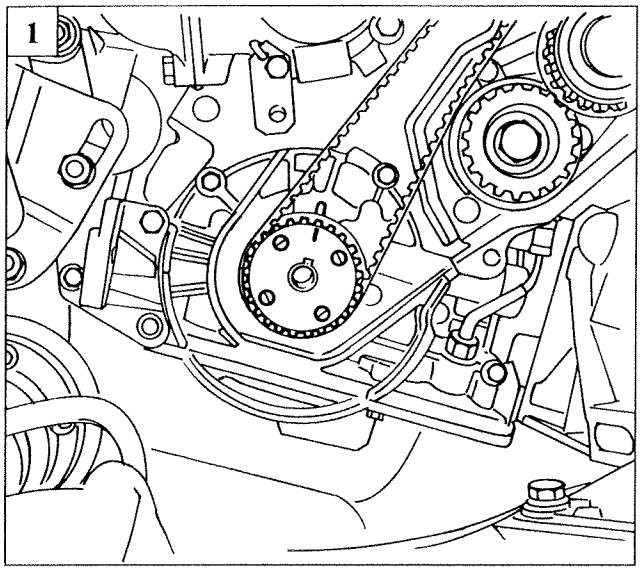

P3U24DJ01

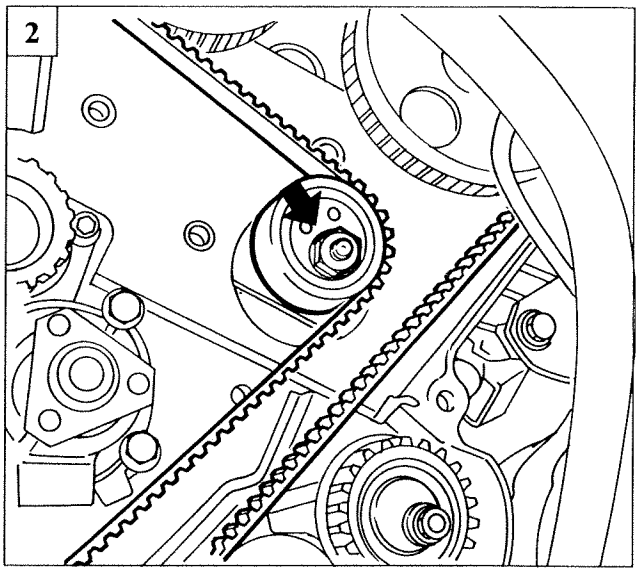

P3U24DJ02

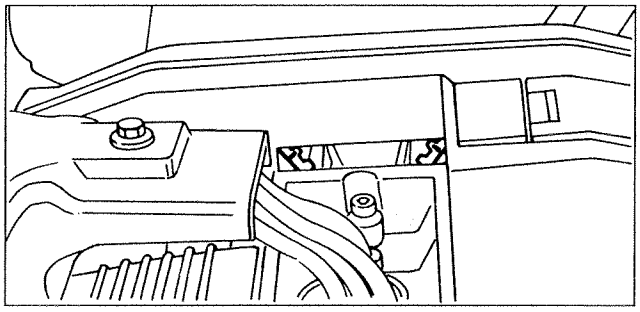

P3U24DJ04

1. Check reference mark on crankshaft drive gear is aligned with ridge on front crankshaft cover as shown in the figure.
2. Slacken belt tensioner and prise belt off pulleys.

Fitting and tensioning timing belt

3. Check references on rear of camshaft pulleys are correctly aligned with lower edges of slot on cam cover and check reference mark on crankshaft gear is aligned with ridge on front crankshaft cover. Fit toothed belt, taking care to check teeth mesh properly with toothed pulleys.

NOTE *It is extremely important not to kink the toothed belt during installation because this could damage the belt material.*

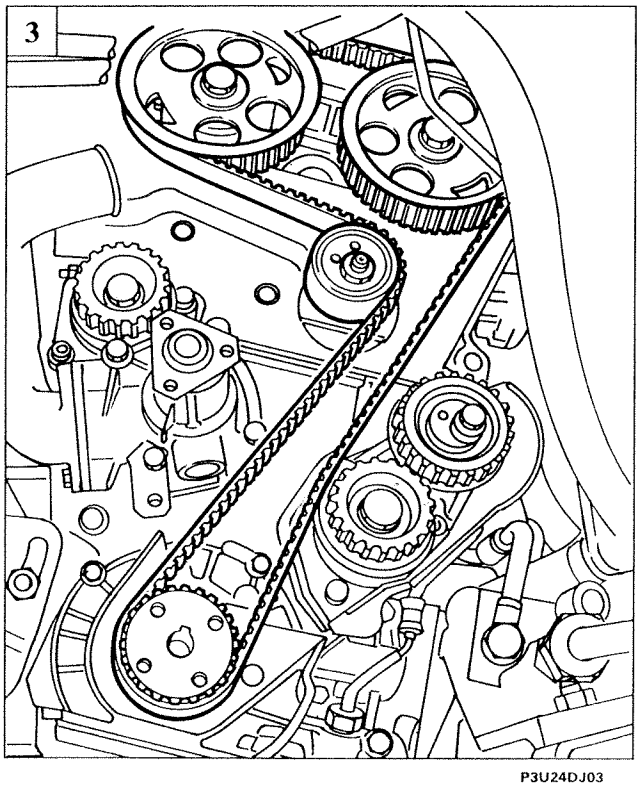

P3U24DJ03

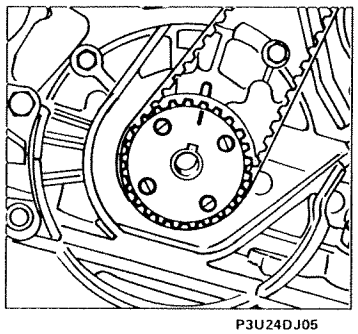

P3U24DJ05

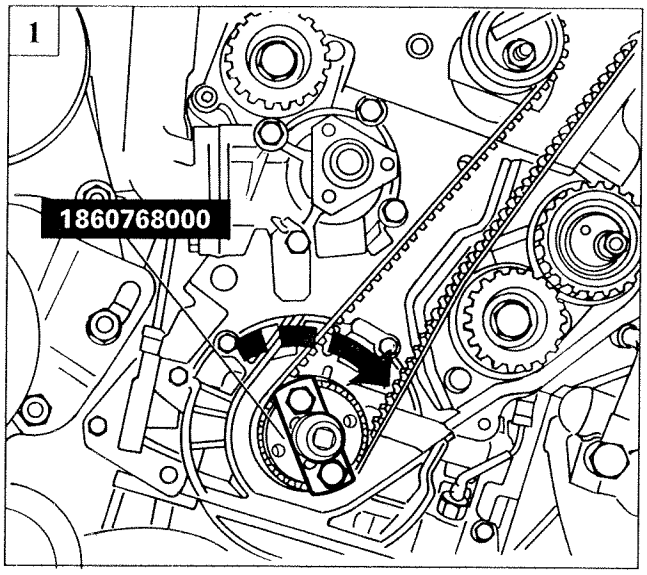

P3U25DJ01

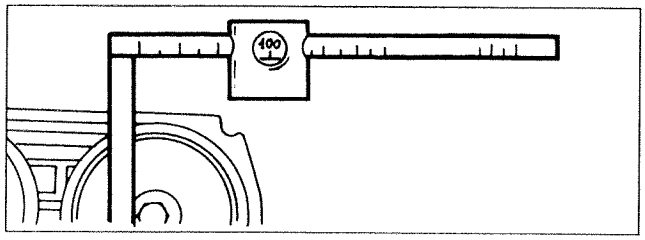

P3U25DJ02

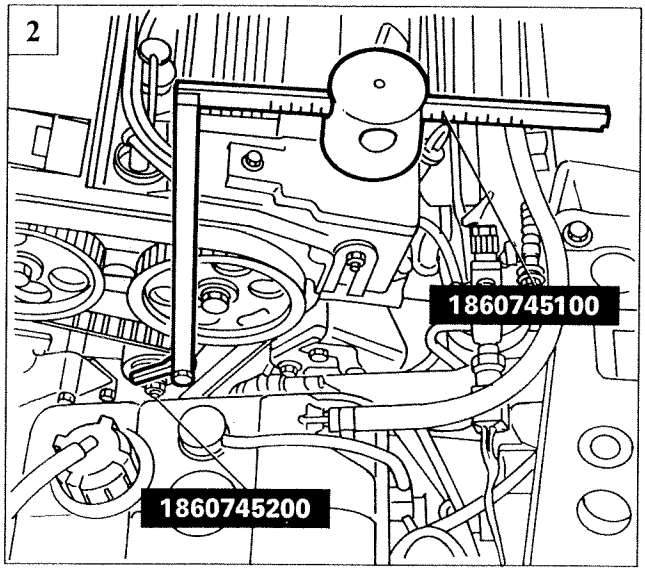

P3U25DJ03

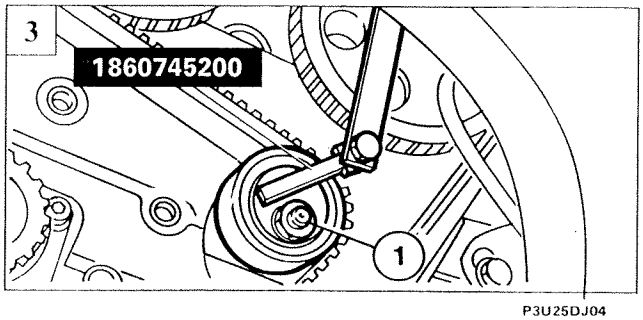

P3U25DJ04

1. Remove flywheel retainer 1860771000 and position engine crank 1860768000 on crankshaft drive gear.

2. Fit part 1860745200 to tool 1860745100 and then position the weight, without knurled part, at a distance of 100 mm along the calibrated rod and tighten. Apply the resulting tool to the belt tensioner as shown in the figure. Now adjust the joint to position the calibrated rod horizontally. Settle the toothed belt by turning the crankshaft twice in its direction of rotation and tighten belt tensioner retaining screw.

NOTE *During this final stage, the calibrated rod may move from its horizontal position. In this case, adjust joint again to restore the calibrated rod to its original position and repeat the operation.*

3. When the operation is complete, tighten nut (1) retaining belt tensioner to a torque of 4.4 daNm.
4. Remove tool 1860768000 and reposition flywheel retainer. Then fit counter-rotating shaft pulley retaining screw (anticlockwise thread) and tighten to a torque of 19 daNm.

Check timing again and position counter-rotating shaft pulley reference mark so that it is aligned with the groove on the front crankshaft cover.

Refit parts and belts removed previously, with reference to instructions in previous sections.

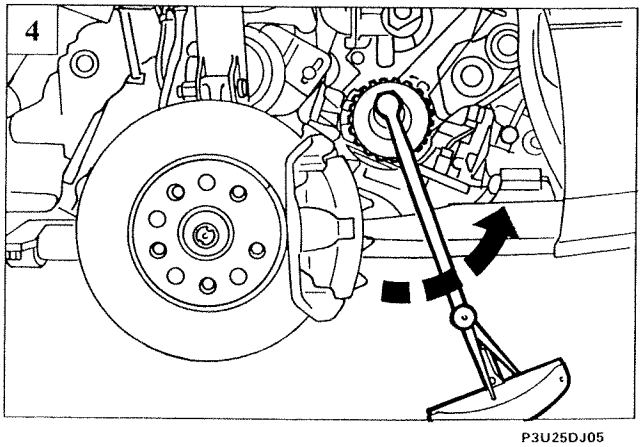

P3U25DJ05

Copyright Fiat Auto

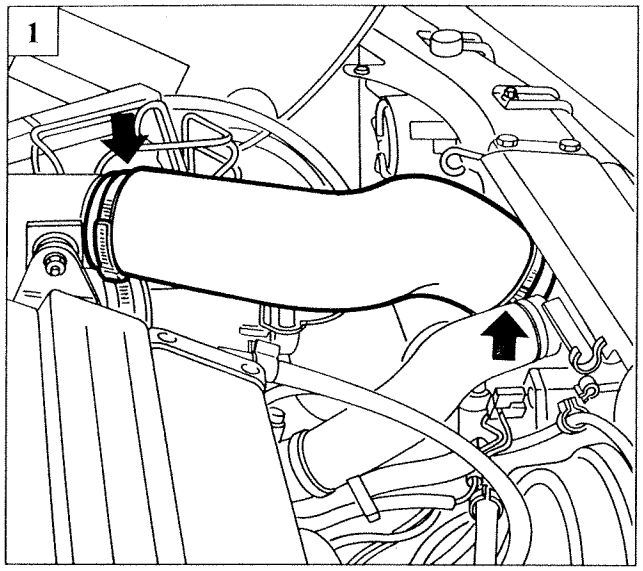

P3U02DJ01

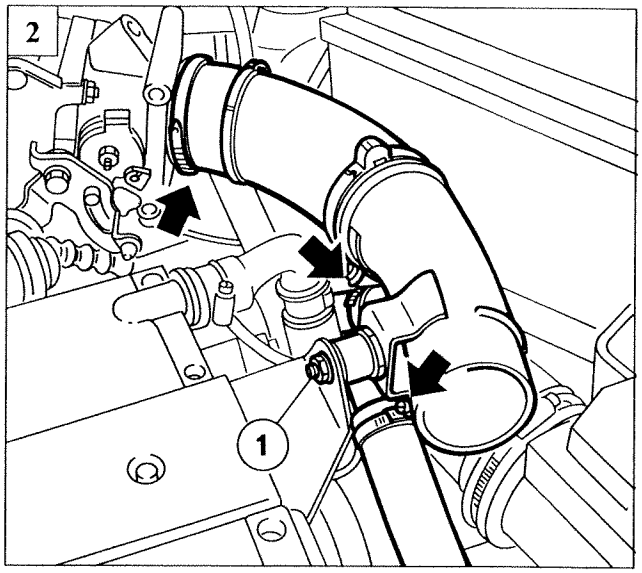

P3U02DJ03

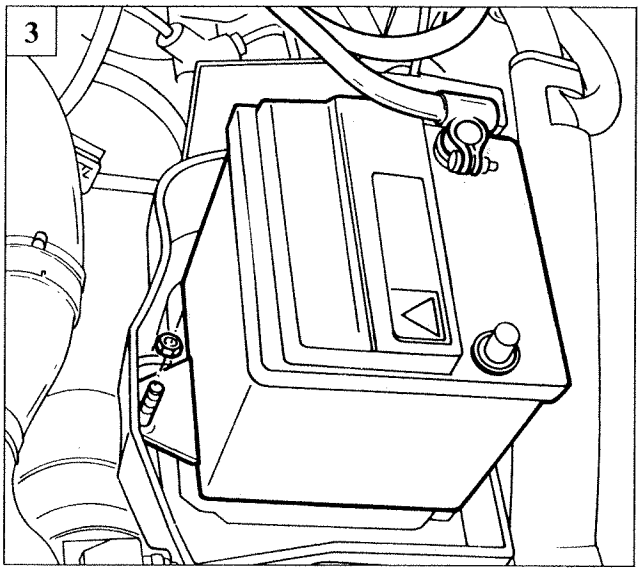

P3U05DJ03

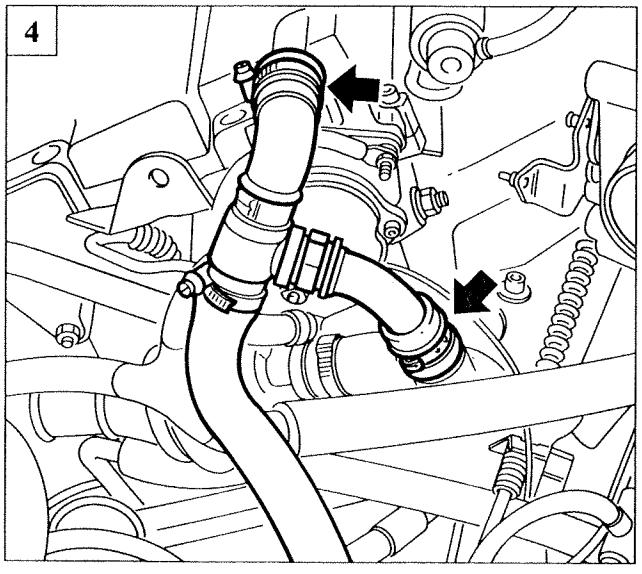

P3U06DJ01

REMOVING-REFITTING CYLINDER HEAD

Disconnect battery negative lead, remove auxiliary, counter-rotating shaft and timing belts as indicated in the previous sections, then proceed as follows:

1. Disconnect the air intake sleeve by undoing the clips shown in the figure.
2. Disconnect the pipe connecting the intercooler to the butterfly valve case by removing the three clips indicated and nut (1).
3. Remove the battery.
4. Disconnect the oil vapour recovery lines shown in the figure.

1

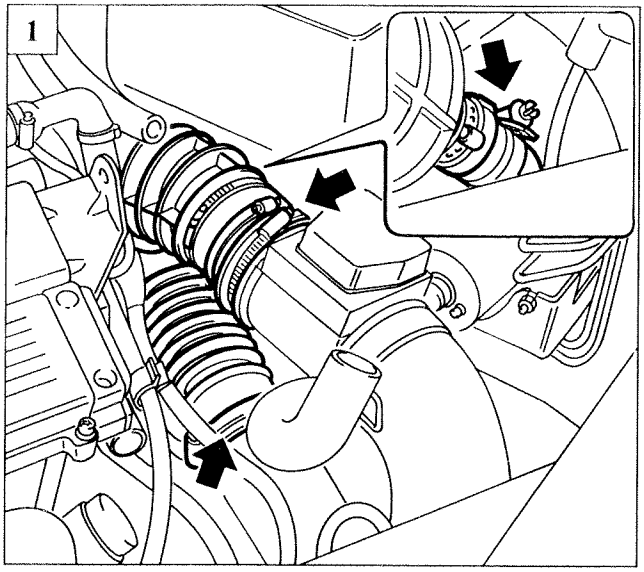

P3U02DJ04

2

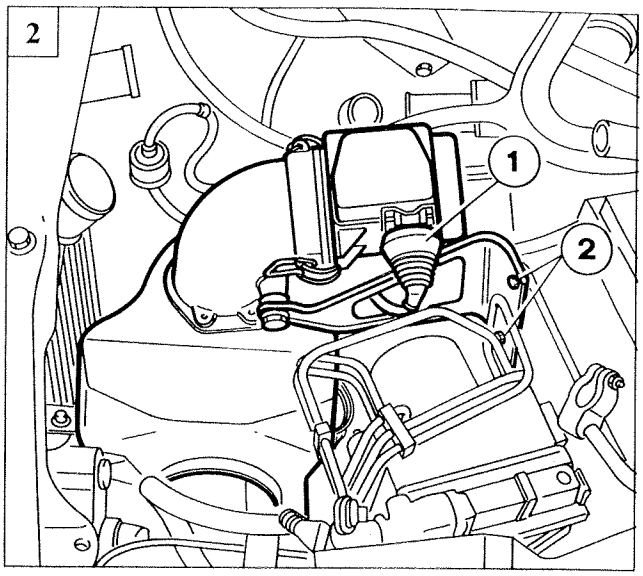

P3U02DJ05

3

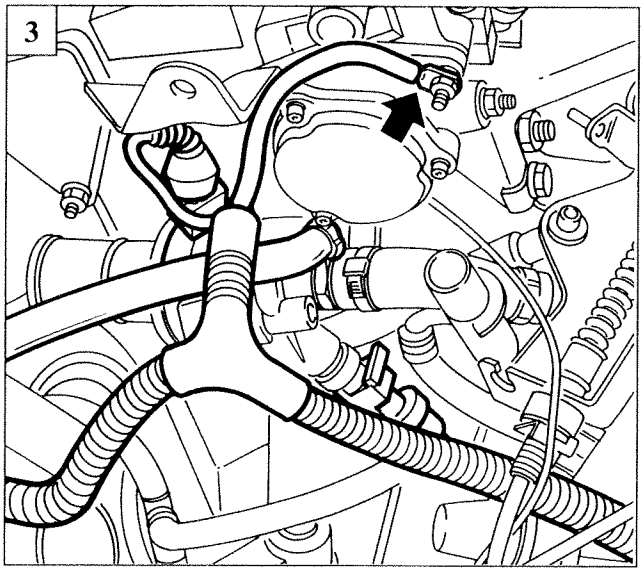

P3U27DJ01

1. Disconnect the sleeve connecting flow meter and turbocharger.
2. Disconnect connection (1), unscrew nuts (2), then remove air cleaner by releasing lower line from air intake.
3. Disconnect electrical connections from thermostat, earth leads from injection timing sensor and line leading to expansion tank.
4. Disconnect connection of injection timing sensor, then disconnect inlet and outlet lines from thermostat. Remove bracket retaining screw shown in box to facilitate line removal.
5. Disconnect accelerator cable from butterfly valve case.

4

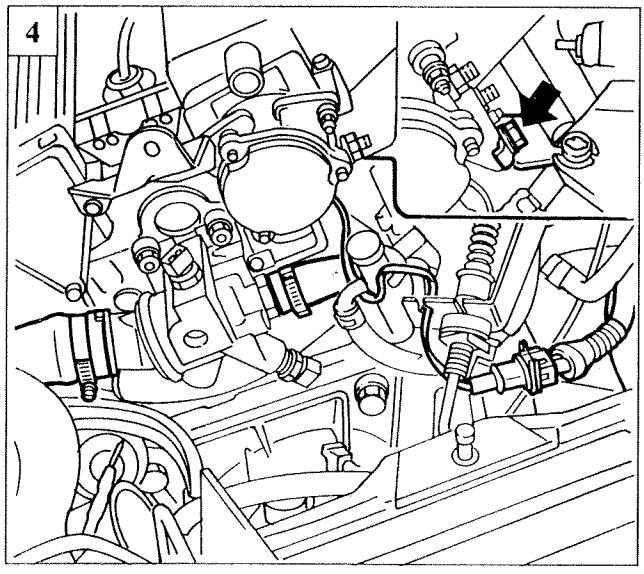

P3U27DJ02

5

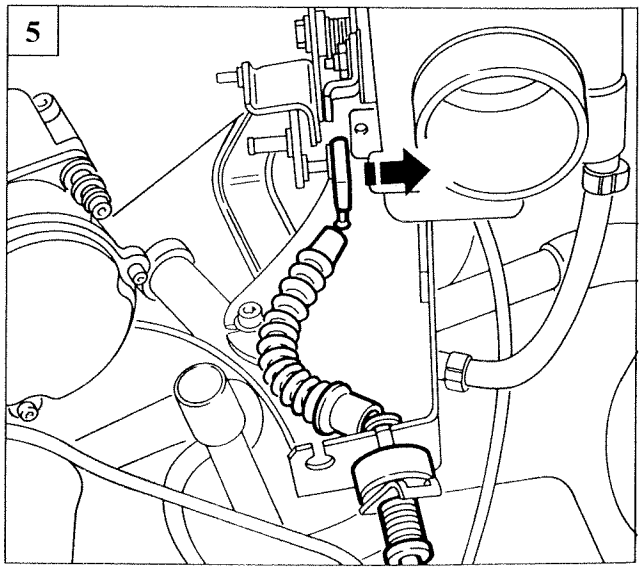

P3U06DJ04

Copyright Fiat Auto

10.

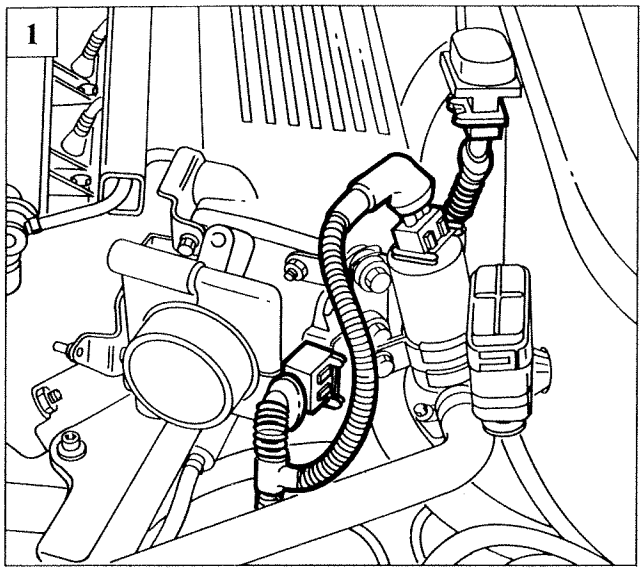

P3U05DJ05

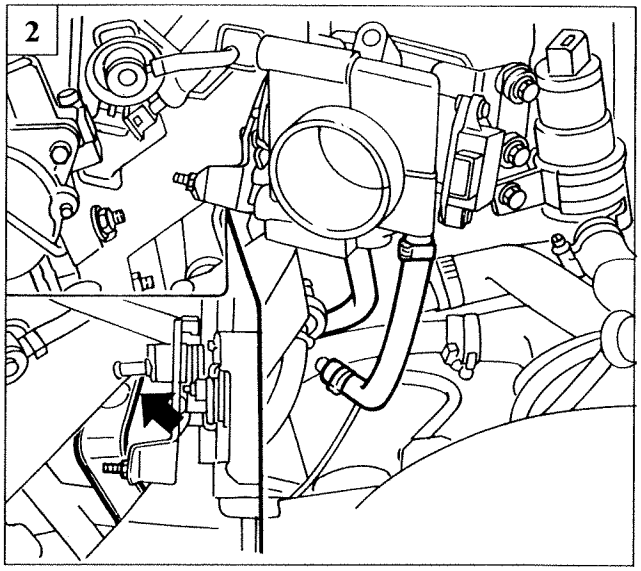

P3U28DJ01

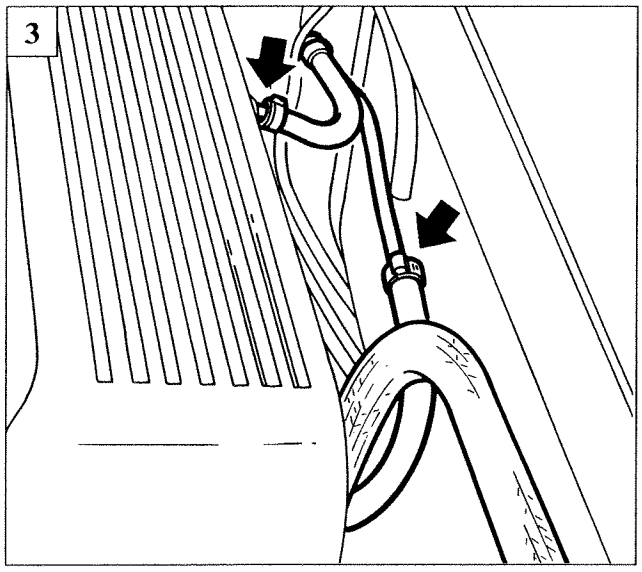

P3U28DJ02

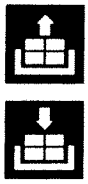

1. Disconnect electrical connections from automatic idle speed adjustment valve, from throttle valve position sensor and from absolute pressure sensor.
2. Remove the two lines shown in the figure (coolant inlet and outlet). Disconnect pipe retaining bracket shown in the box.
3. Remove the evaporation control system lines shown in the figure and the brake servo vacuum line from the intake manifold.
4. Disconnect fuel inlet and outlet lines.
5. Open wiring channel shown in figure, then disconnect electrical connections from fuel injectors.

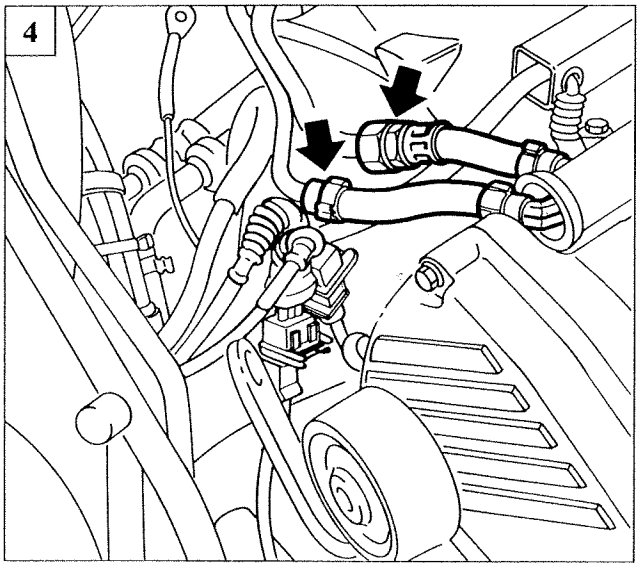

P3U28DJ03

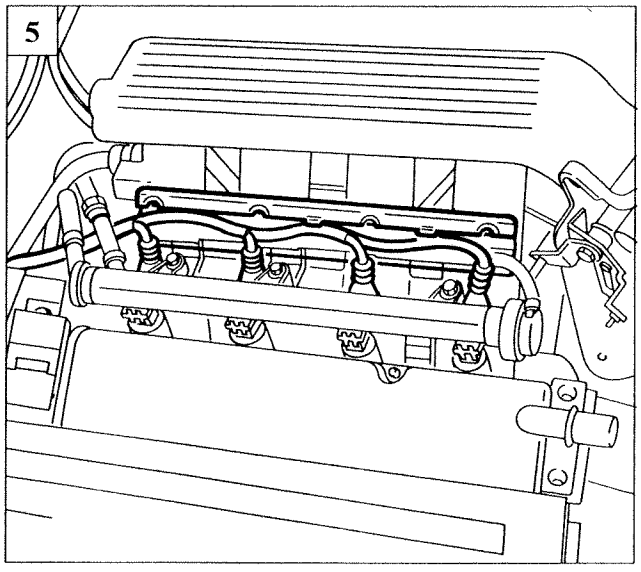

P3U08DJ04

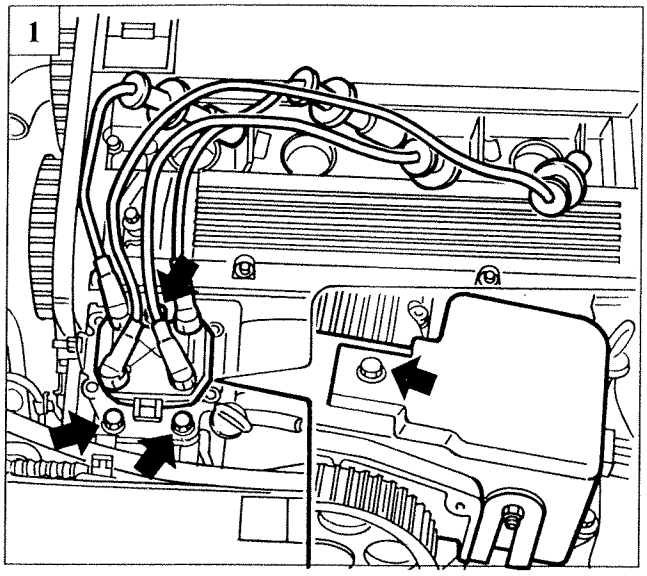

P3U29DJ01

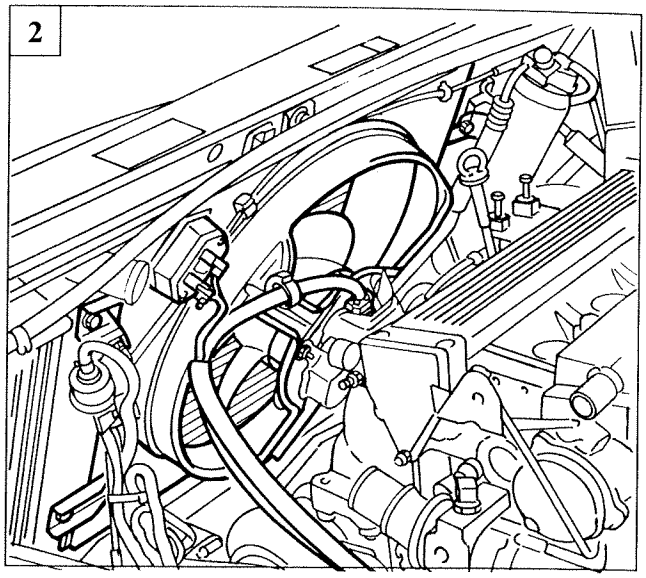

P3U29DJ02

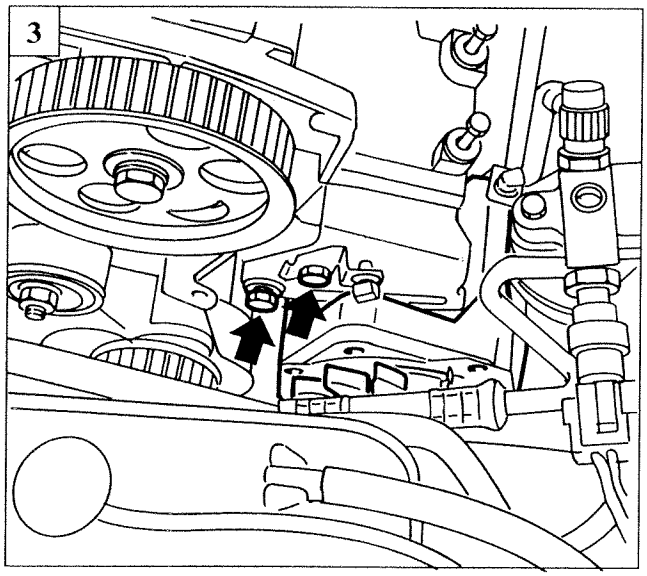

P3U29DJ03

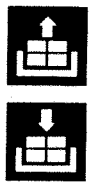

1. Remove cover protecting ignition coil, then disconnect spark plug leads and remove coil from bracket.
2. Disconnect electrical connections from electric fan, unscrew the bolts fastening Pierburg valve and dehydrating filter, then remove electric fan by undoing associated fastenings.
3. Remove screws retaining alternator, then turn over to allow removal of the cylinder head.
4. Lift the vehicle, then remove the first exhaust pipe section.
5. Remove the turbo cooling and lubricant lines shown in the figure, then unscrew bolt retaining turbocharger support bracket.

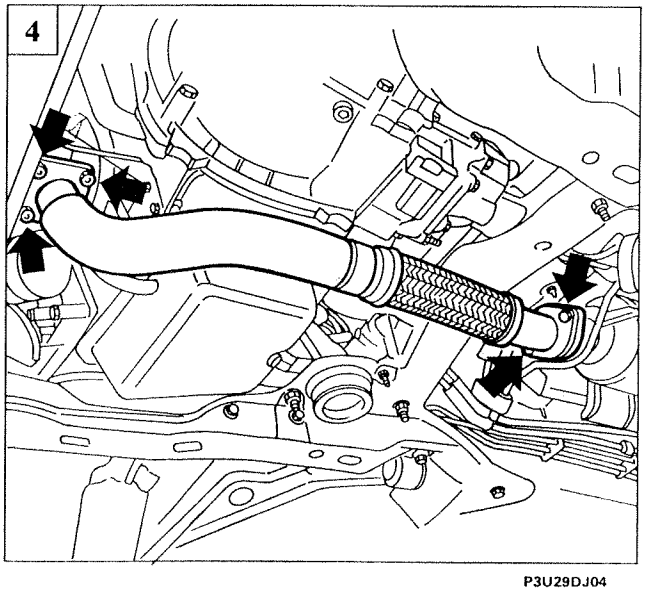

P3U29DJ04

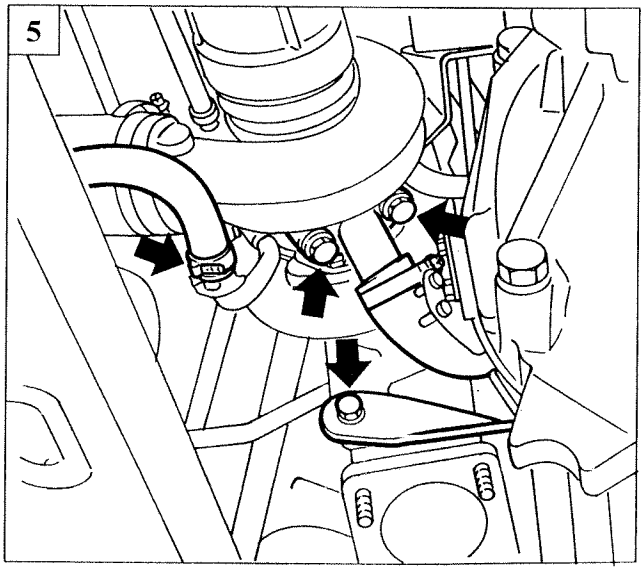

P3U29DJ05

Copyright Fiat Auto

10.

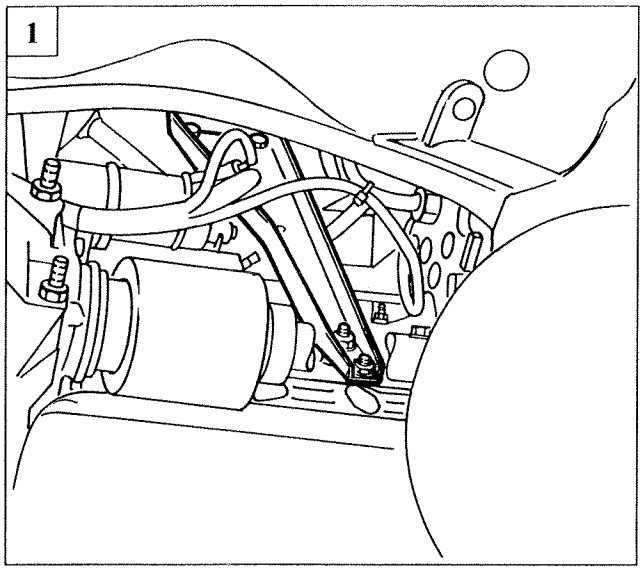

P3U30DJ01

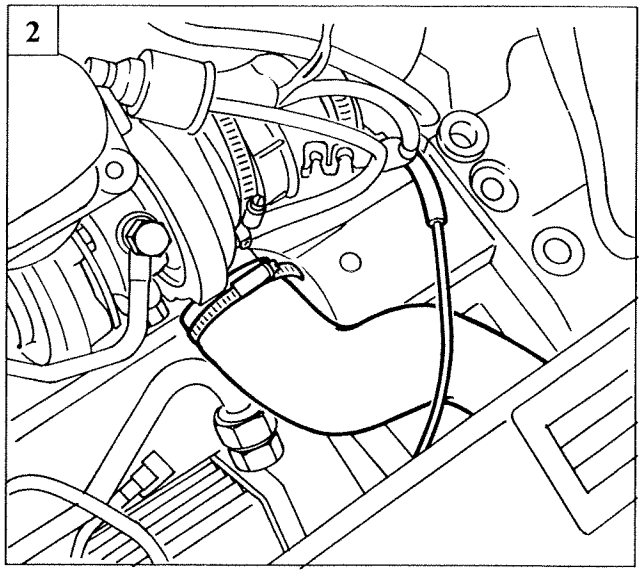

P3U30DJ02

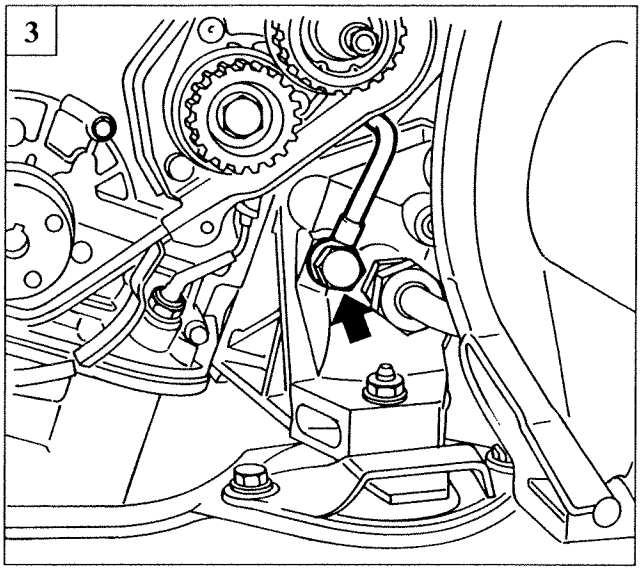

P3U30DJ03

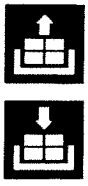

1. Remove intake manifold mount bracket.
2. Remove pipe connecting intercooler and turbocharger, and evaporation control system pipe from turbocharger.
3. Unscrew oil line fitting shown in figure.
4. Unscrew screw retaining turbocharger bracket and nuts retaining exhaust manifold, then remove turbocharger - exhaust manifold assembly from engine bay.
5. Unscrew screw retaining line shown in figure to cylinder head.

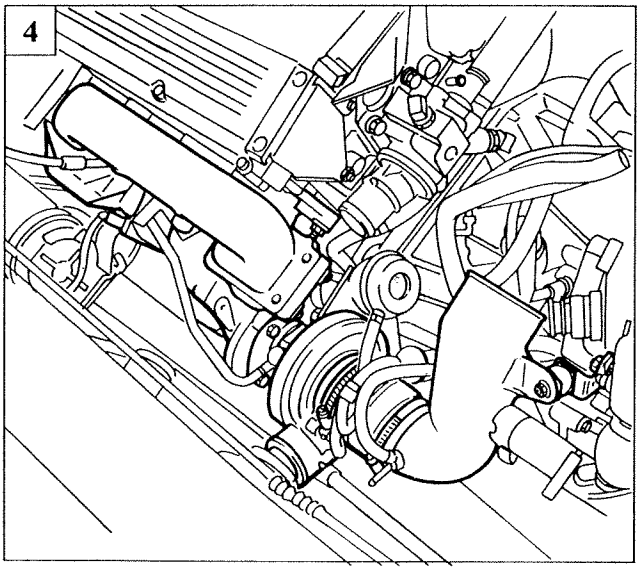

P3U30DJ04

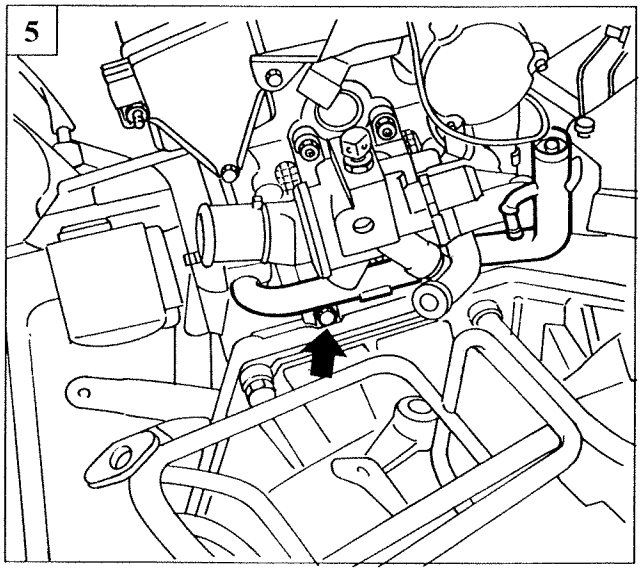

P3U30DJ05

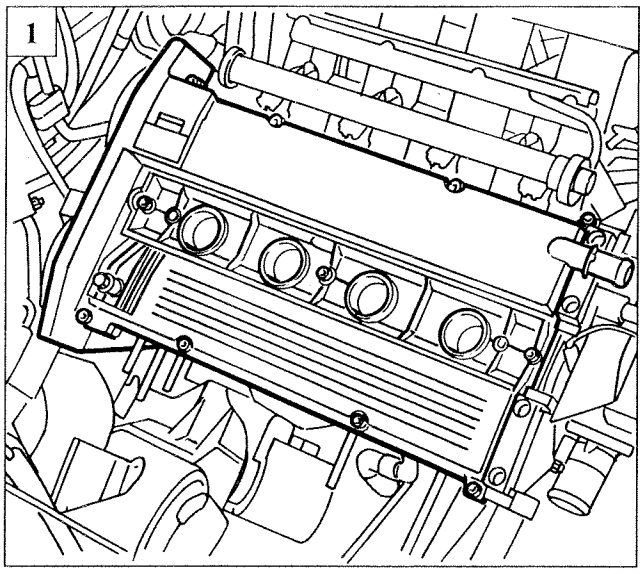

P3U31DJ01

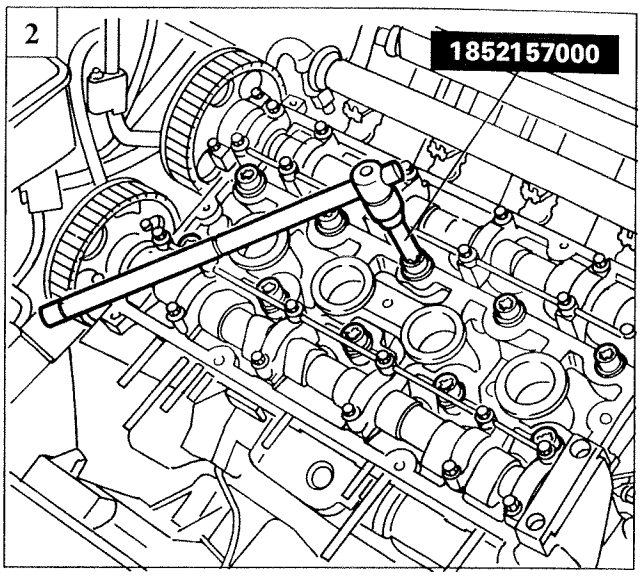

P3U31DJ02

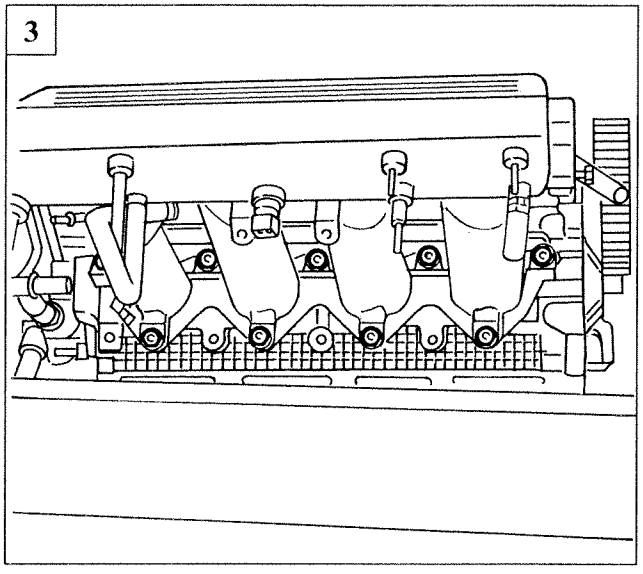

P3U31DJ03

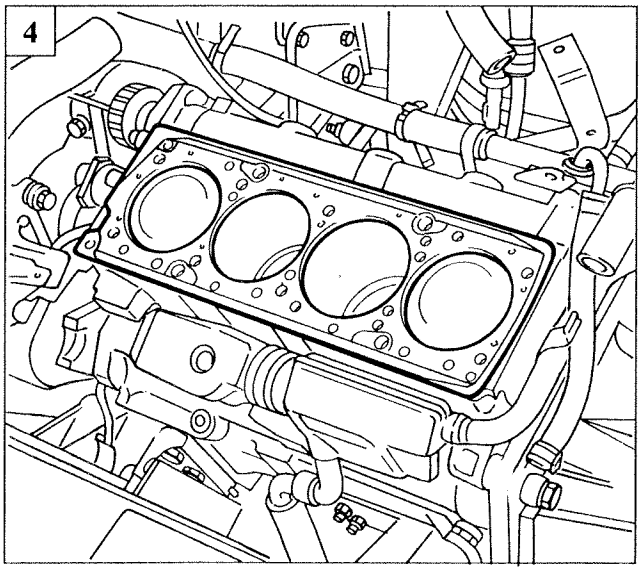

P3U31DJ04

1. Remove the cam cover by undoing the retaining screws shown.
2. Unscrew bolt retaining the cylinder head using wrench 1852157000, then remove the cylinder head with exhaust manifold from engine bay.
3. Separate the exhaust manifold from the cylinder head by undoing the retaining bolts shown in the figure.

Refitting

Carefully scrape clean gasket mating surfaces on crankcase and cylinder head.

4. Position cylinder head gasket with the wording "ALTO" facing the operator.

The cylinder head gasket is ASTADUR type. This type of gasket is made from a special material which undergoes a process of polymerisation while the engine is running and therefore hardens considerably during use.
The following conditions must be satisfied in order to ensure polymerisation occurs:

- *keep the gasket sealed in its plastic bag;*
- *take out of the bag shortly before fitting;*
- *do not oil the gasket or contaminate with oil. Ensure cylinder head and crankcase surfaces are thoroughly clean.*

Copyright Fiat Auto

1

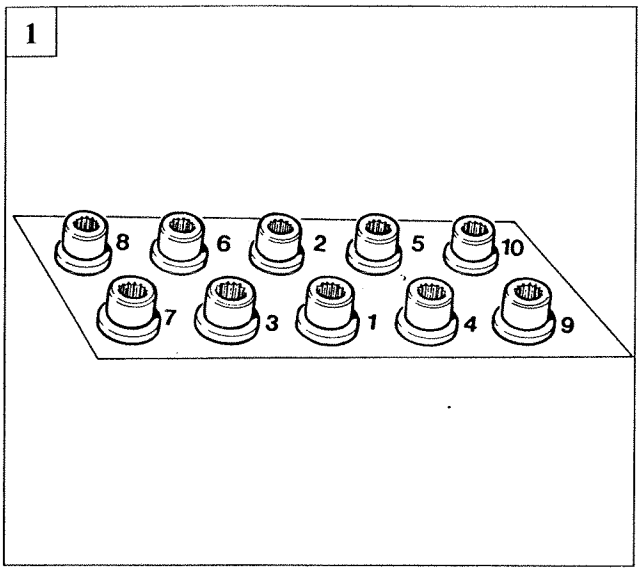

P3U32DJ01

2

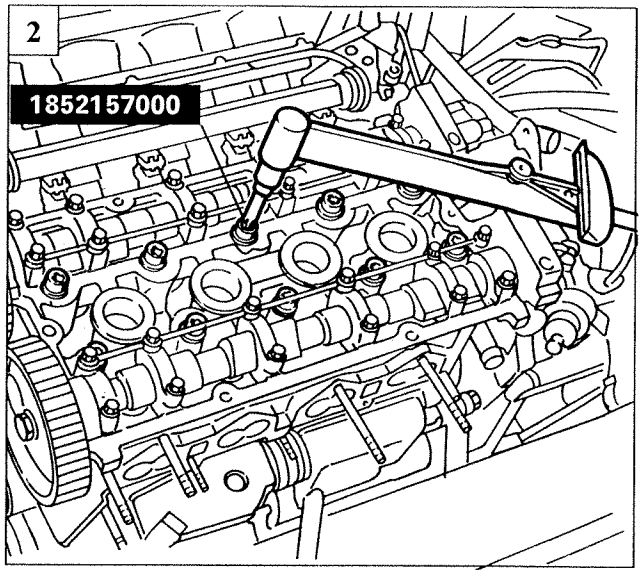

P3U32DJ02

3

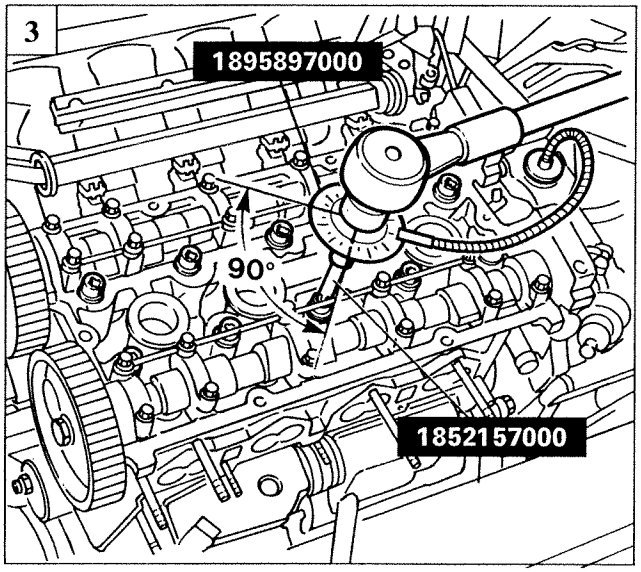

P3U32DJ03

1. Position the cylinder head, then tighten retaining screws to torque.
   Proceed as follows to tighten cylinder head bolts effectively. Note that the tightening pattern is as shown in the figure for each tightening stage:

2. Oil the screws and washers and leave to drain for at least 30 minutes. Screw in bolts to a torque of 2 daNm and then tighten to a torque of 7 daNm by means of wrench 1852157000.

3. Angle tighten bolts in two separate stages (90° + 90°) using wrench 1852157000 and 1895897000.

Refit parts removed previously by reversing disassembly instructions. Fit timing and auxiliary belts and tension as described in the previous paragraphs.

page

FUEL SYSTEM

- BOSCH M2.7 M.P.I. INTEGRATED INJECTION - IGNITION SYSTEM 1
- Introduction 1
- Principle of operation of injection system 1
- Principle of operation of solid state ignition system 2
- System operating strategies 2
- Injection - ignition system diagram 6
- System components 7
Fuel feed circuit 7
- Pressure regulator and fuel manifold 8
Air intake circuit diagram 9
- Throttle case 9
- Air flow meter (debimeter) 10
- Engine idle speed actuator 11
- Throttle valve position sensor 12
- Intake air temperature sensor 10
- Absolute pressure sender unit 12
- Turbocharging system 13
Electric-electronic system 14
- Injection-ignition ECU (control unit) 14
- Diagram showing electrical connections 15
- Location of injection-ignition system components in engine bay 16
- Identifying connections on control unit 17
- Diagram showing control unit input and output 18
- Bosch M2.7 system relays 19
- Injection timing sensor 20
- Power module for ignition 21
- RPM and TDC sensor 22
- Coolant temperature sensor 22
Circuit for checking harmful exhaust emissions 23
- Engine exhaust assembly 23
- Fuel evaporation control and vapour recovery circuit 23
- Diagram showing circuit for recirculation and recovery of blow-by gases) 24
Checks, adjustments and repairs to Motronic M2.7 injection-ignition system 25
- Checking gap and angular position of rpm and TDC sensor. 25
- Tests and checks on ignition coil 26

page

- Checking fuel supply circuit 26
- Removing-refitting fuel manifold together with injectors and pressure regulator 27

Copyright Fiat Auto

COPYRIGHT FIAT AUTO

The reproduction, even partial, of the text and illustrations is prohibited.

The information contained in this publication is purely indicative and could be out of date following modifications made by the Manufacturer, at any time, for technical or commercial reasons or in order to conform to legal requirements in the various countries.

Fiat Auto S.p.A.
Direzione Marketing e Commerciale
Servizi al Cliente - Servizi Post Vendita
10134 TORINO (Italy) - Corso E. Giambone, 33
Publication no. 506.475/05 - Aprile 1995 - 400
Printed in Italy - Tip. Giraudo - TORINO
order no. 60489504

BOSCH MOTRONIC M2.7 MPI INTEGRATED INJECTION-IGNITION SYSTEM

Introduction

The Bosch Motronic M2.7 system fitted to the LANCIA k 1995, 16 v turbo engine belongs to the category of digital electronic systems with inductive discharge and static distribution integral with sequential, phased electronic injection.

This system adopts a single ECU, single wiring system and a set of common sensors. The unit injects an exact quantity of fuel into the engine intake duct, upstream of the intake valves. This mixes with the air admitted to the cylinder to produce the correct mixture proportions.

The electronic control unit also controls turbo pressure according to environmental and engine service parameters.

This device ensures efficient operation, running economy and maximum reduction in harmful exhaust emissions.

This system does not require adjustment of engine idle speed, throttle valve sensor position or exhaust gas CO level.

PRINCIPLE OF OPERATION OF INJECTION SYSTEM

Two essential conditions must be satisfied in the preparation of a air-fuel mixture to ensure efficient operation of controlled ignition engines:

1) metering (air/fuel ratio) must be maintained as close as possible to a stoichiometric ratio in order to ensure combustion takes place quickly without pointless waste;
2) the mixture must be made up of fuel vapours diffused through the air as finely and evenly as possible.

The nozzles of the Bosch Motronic M2.7 system perform the task of distributing the fuel by nebulizing it into minute droplets. Because input air may be under a range of absolute pressure conditions, the amount of fuel to be injected should be adjusted in order not to alter the weight ratio between air and fuel. A constant ratio is obtained by adjusting fuel feed pressure, using a regulator, according to intake duct vacuum level so that the difference between the two pressures is constant under all engine service conditions.

Optimal fuel metering is calculated on the basis of the following measurements:

- exact quantity of air taken in by debimeter (air flow meter)
- coolant temperature, relayed by sensor on thermostat mount;
- intake air temperature, via NTC sensor housed in flow meter
- exhaust gas oxygen content, relayed by lambda probe.

This information is processed by a microcomputer in the injection ECU, which calculates base pulse constant using experimentally calculated values mapped in a specific memory of the control unit.

Copyright Fiat Auto

PRINCIPLE OF OPERATION OF STATIC IGNITION SYSTEM

The central control unit (electronic control unit) stores a map containing a set of optimal advance values that may be adopted by the engine within its operating range on the basis of engine rpm and load.

These values are obtained experimentally by a long series of practical tests carried out on prototypes at a test bench in order to identify advance settings that can be used to achieve the best compromise between the contrasting requirements of maximum power, minimum fuel consumption and harmful exhaust emission abatement.

During engine operation, the control unit is kept continually informed on speed (engine rpm) and load conditions. On the basis of these it selects from its memory the optimal advance value for these specific conditions and governs the ignition unit power module accordingly.

The control unit computer also corrects this value on the basis of other factors such as engine temperature, intake air temperature, throttle position and knock in order to obtain an optimal ignition point.

The igntion system consists of:

a) **A power module** outside the control unit that is responsible for sending a current to the primary winding of the ignition coil until it is completely energized and then cutting off the current instantly so that an extremely high voltage is set up in the secondary winding and a spark is sent to to the plug.

b) **An ignition coil** with four high tension terminals, made up of two primary windings (supplied by battery voltage) and two secondary windings (high tension) whose outputs are directly connected to the spark plugs of cylinders 1-4 and 3-2 respectively, which send out high tension whenever the primary winding is demagnetized by the power module.

The high tension that supplies two spark plugs simultaneously is of different intensity due to the characteristics of the secondary winding circuit (spark plugs in series). This is due to the fact that periodically one of the two spark plugs is under conditions of higher pressure (compression stage) in relation to the other (exhaust stage). Because the current must overcome a higher dielectric gradient in the spark plug in compression stage, a more powerful spark is produced whereas the spark in the other is negligible (thus restricting fuel consumption).

The information required by the central control unit for governing the power module is transmitted by means of electrical signals produced by the following two sensors:

a) **Air flow meter (debimeter)** which converts this value to an electrical signal on the basis of the amount of air taken up by the engine (engine load) and sends it to the electronic control unit.

b) **Knock sensor** which sends a signal to the control unit indicating the level of cylinder head knock. In this case, the control unit implements a strategy to reduce the ignition advance angle.

c) **Rpm and TDC sensor** which produces an alternating single phase signal whose frequency indicates engine rpm and identifies TDC position of the piston pairs of cylinders 1-4 and 3-2.

SYSTEM OPERATING STRATEGIES

The ECU continually adjusts ignition advance angles and injection pulse duration according to information received in order to perform numerous functions, of which the most important are:

A. System self-adaption

A fundamental and innovative feature of this system is "self-adaption": it is able to recognise changes occuring in the engine (different internal friction and different temperatures, settling of engine with time etc.) in order to compensate accordingly.
This self-adaptive function also allows inevitable differences to be made up for (due to manufacturing tolerances) due to replacement parts. This allows the entire vehicle to operate at maximum efficiency without specific adjustments and checks.

B. Fuel metering

On the basis of information on air intake quantity, intake air temperature and coolant temperature, the ECU identifies baseline injection time for correct metering by consulting a special memory map.

C. Cold start control

During start-up, the ECU sends the injectors a signal of sufficient duration and frequency to ensure the necessary fuel enrichment for starting.
An anti-flood function is also included, which is controlled by rpm and duration of starting attempt. Injection time is reduced when the engine does not start immediately for some reason.

D. Engine warm-up

As the engine heats up, the mixture is enriched and injection times are increased in inverse proportion to coolant temperature.

E. Control of enrichment during over-run

When required to accelerate, the ECU increases injection in order to avoid lag.

This situation is recorded by a potentiometer on the throttle that indicates instantaneously to the ECU that an acceleration request has been made and ahead of a signal from the debimeter recording a signficant increase in air flow.

F. Full power

During engine operation at full load (with throttle fully open) baseline injection times are increased to enrich the air-fuel mixture. During this operating stage, the ECU also disenables the Lambda probe function.

G. Fuel cut-off during over-run

With throttle closed and rpm more than a threshold level (about 1200 rpm), the ECU deactivates fuel injection. In this way the number of revs drops quickly to a minimum and fuel is saved for a considerable improvement in fuel economy. **The cut-off threshold varies according to engine temperature.**

H. Idle speed control

Idle speed is adjusted by means of a special actuator that acts on the throttle by-pass.

This also adjusts idle speed fluctuations due to activation of various appliances (e.g. air conditioner compressor); with the throttle closed, the actuator adjusts the by-pass opening to make up the power required by the appliances in order to ensure idle speed is as constant as possible.

The vehicle speed signal is also considered for the idle strategy; this establishes whether vehicle is idling at a standstill or moving.

NOTE *The system self-adaptation function allows any idle speed adjustment to be eliminated. The ECU recognises the "throttle closed" position from the throttle case sensor. This allows it to monitor wear that may arise in the closed position.*

I. Limitation of maximum rpm

The maximum rpm limitation management and control strategy is as follows:

- allows a speed of 6600 rpm to be exceeded for a maximum period of 10 seconds (this condition occurs due to a delay in changing to a higher gear).
- Injection is always cut off at a level of 6800/min.

Copyright Fiat Auto

L. Controlling combustion gas - Lambda probe

The oxygen probe (lambda probe) provides the ECU with data on quantity of oxygen in exhaust emissions and hence correct air-fuel metering

The mixture is optimal when lambda = 1 (intake air = theoretical amount of air necessary for combustion). The electric signal sent by the probe to the ECU alters abruptly when mixture composition alters from lambda = 1.

When mixture is lean, the ECU increases fuel quantity and reduces it when the mixture is rich.

In this way, the engine works around an ideal lambda value as far as possible.

The lambda probe signal is processed in the ECU by an integrator that prevents abrupt injection time changes when correcting mixture concentration.

The probe is heated with an electrical coil so that the correct operating temperature can be achieved rapidly (circa 300 °C).

At lower temperatures, the lambda probe is not active.

The lambda probe allows the engine to operate within the limits imposed by legilation on polluting emissions under all conditions.

The lambda signal also helps to compensate for altitude, because changes in air density are immediately detected by the control unit, which adjusts injector delivery independently of the signal from the air flow meter, which records such changes more slowly.

M. Fuel vapour recovery

With the engine operating under the aspirated system, fuel vapours from the tank are collected in a fuel vapour filter (trap) and sent on to the engine intake, where they are burnt due to the opening of a solenoid.

The control unit opens the above solenoid by means of a "duty cycle" signal which varies according to rpm and engine load so that these vapours can flow out to the engine intake without "altering" engine operation.

The control unit compensates for the extra amount of fuel by reducing fuel flow to the injectors.

When the engine is turbocharged, the vapour recirculation solenoid remains closed. This prevents turbo pressure from being vented to the outside through the active carbon filter.

A second pneumatic valve dissipates the build-up of vaporus by sending them through the air intake duct upstream of the compressor when the engine is turbocharged.

N. Connection with air conditioner compressor

The control unit is connected to an air conditioning system so that idle speed may be adjusted to the increased power uptake whenever the compressor is activated.

In the case of high power requirements, the control unit cuts off power to the compressor momentarily (7-10 seconds) .

O. Connection to Lancia CODE system

If the Lancia CODE control unit fails to recognise an electronic code, the injection-ignition control unit is automatically prevented from operating.

P. Control of detonation or knock

Knock (or detonation) is controlled by a sensor housed on the monobloc.
When the engine knocks, vibrations of a certain frequency are set up in the crankcase. The effect causes mechanical repercussions on a piezoelectric crystal in the sensor that sends a signal to the ECU.
The ECU carries out selective recognition of detonation cylinder by cylinder via detonation sensor and uses the rpm and TDC sensor to detect the angular position of the crankshaft upon the next cycle, i.e. after two crankshaft rotations. Thus upon the ignition stage of the same cylinder, the ignition advance is reduced
The ECU maintains the ignition delay for a couple of crankshaft turns (depending on engine speed). The ignition advance is then gradually restored to its original level or to a level when knock begins again.
If these measures are insufficient, injection time is increased in order to enrich the mixture with the aim of dissipating a greater quantity of heat in the combustion chamber (due to evaporation of excess fuel).
The control unit reduces turbo pressure if knock persists.

Q. Vehicle speed signal

In the M2.7 system, the vehicle speed signal allows the ECU to recognise when 1st gear is engaged.
This is achieved by comparing engine rpm with vehicle speed. In this case the ECU's function is to limit turbo pressure in the case of sprint starts to prevent the drive wheels skidding excessively (antispin function.)

R. System self-diagnosis

The Motronic M 2.7 injection-ignition system features an "**automatic diagnosis**" function able to memorise sensor and actuator faults in order to facilitate subsequent identification and correction. Faults appear on the infocenter display.

The system can be subjected to comprehensive fault diagnosis through active dialogue with a Fiat/Lancia tester.

Copyright Fiat Auto

YSTEM DIAGRAM

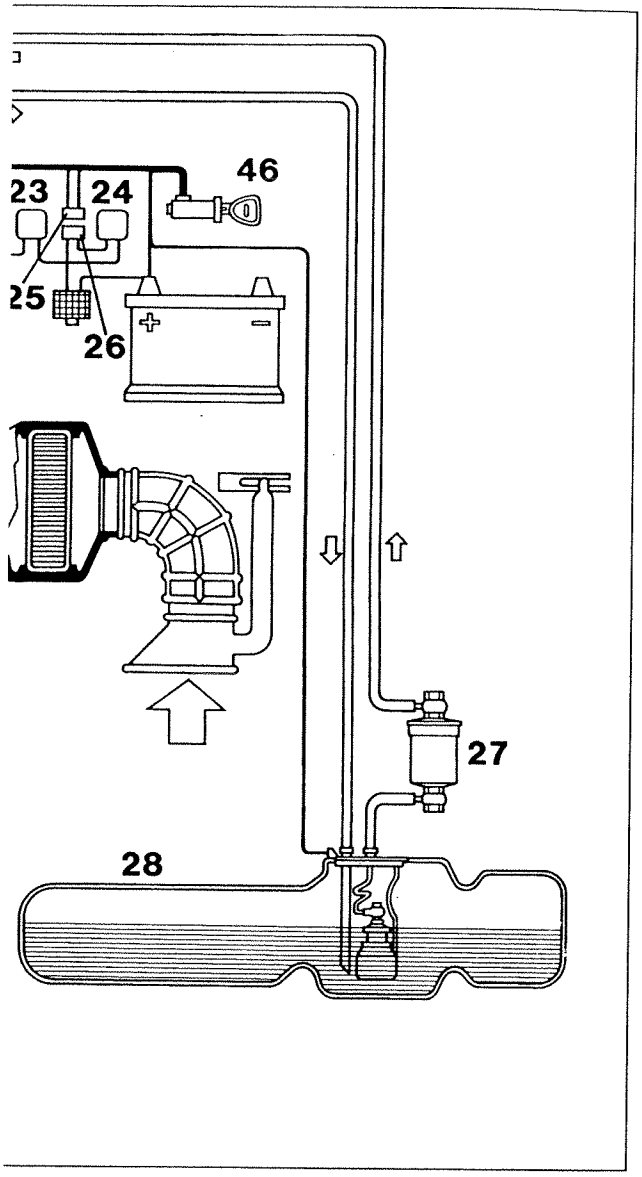

P3U06DX01

Lambda probe preheating circuit fuse
System fuse (injection-ignition)
Fuel filter
Fuel tank with submerged pump
Speedometer sensor on gearbox
Turbo by-pass valve
Infocenter
Catalytic converter
Ignition switch

BOSCH MOTRONIC M2.7 SYSTEM COMPONENTS

The Bosch Motronic M2.7 injection-ignition system is made up of four interdependent circuits

A Fuel supply circuit
B Air intake and turbocharging circuit
C Electric/electronic circuit
D Circuit for checking harmful exhaust emissions

Two devices and their circuits strictly related to the injection system are also present. These are also designed to reduce vehicle harmful emissions in line with current legislation. These are as follows: **fuel evaporation control and vapour recovery circuit; crankcase vapour recirculation and recovery circuit.**

NOTE *Many of the features and functions of the Bosch Motronic M2.7 are shared with the similar M2.10 system fitted to the 1998 20v version. This section describes only subjects specific to this version. Refer to 1998 20v section for further information.*

A. FUEL SUPPLY CIRCUIT

This consists of the following parts::

1. reservoir
2. pump submerged in tank
3. mesh prefilter on pump intake
4. paper main fuel filter
5. delivery circuit
6. four injectors
7. fuel pressure regulator
8. return circuit

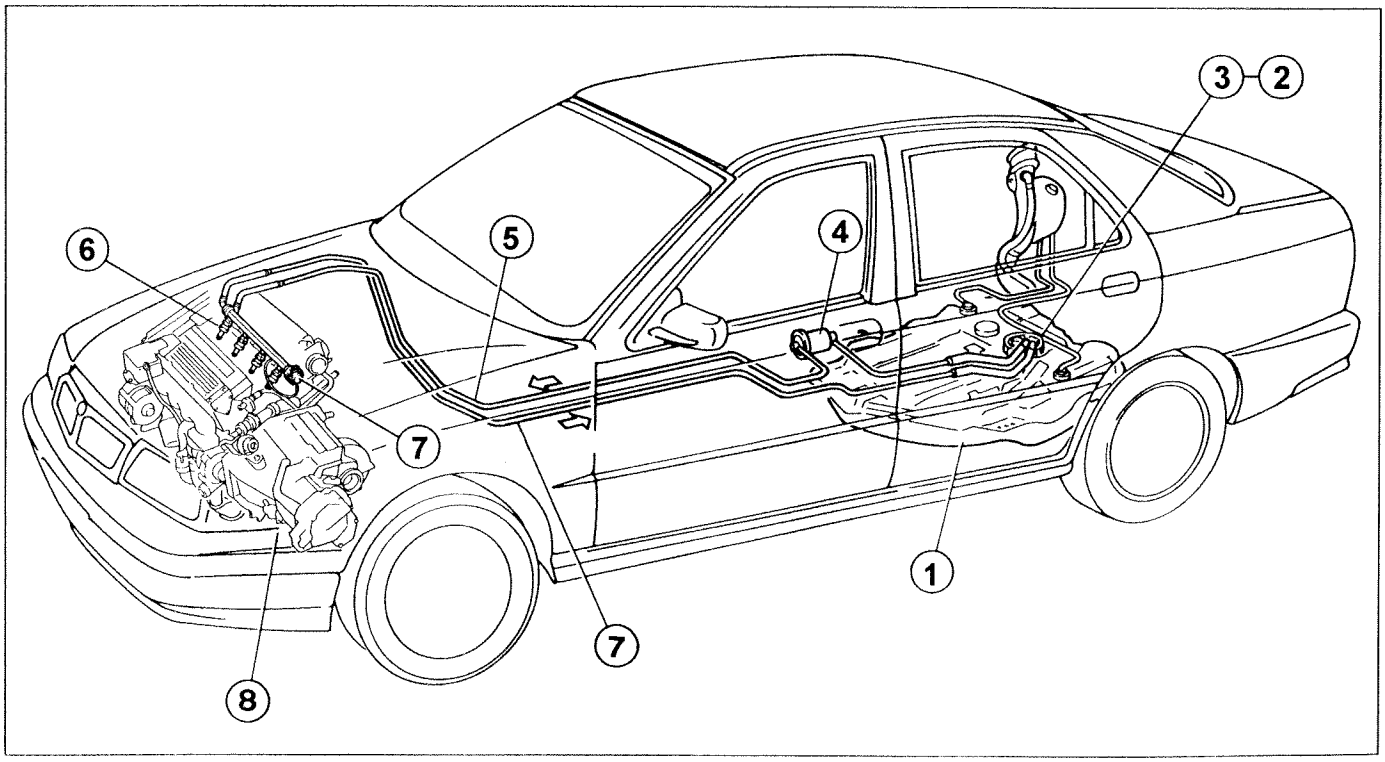

P3U07DX01

Pressure regulator and fuel manifold

The mechanical, diaphragm-type pressure regulator is fitted downstream of the fuel manifold and cannot be adjusted.
The fuel manifold consists of a single body that supports both injectors and pressure regulator. The fuel return line is fitted inside the manifold.

The pressure regulator consists of a metal case that contains a mobile unit made up of metal body (8) and membrane (4) loaded by spring (5). After overcoming a set force, made up of the vacuum on the other side of the membrane and load of spring (5), the fuel pushed by the pump opens valve (7) to allow excess fuel to flow through pipe (2) to the tank.

The spring housing chamber communicates with the engine intake duct (6) (vacuum signal). This feature maintains a constant difference between fuel pressure and intake manifold vacuum throughout all engine service conditions.

Pressure regulator setting: 3 $\pm$0.2 bar with engine idling (vacuum about 0.5 bar).

1. Fitting connected to fuel inlet line
2. Fitting connected to fuel return line
3. Injector and fuel manifold mount
4. Membrane with reflux valve
5. Regulating spring
6. Pipe connected to vacuum in intake manifold
7. Reflux valve
8. Metal case

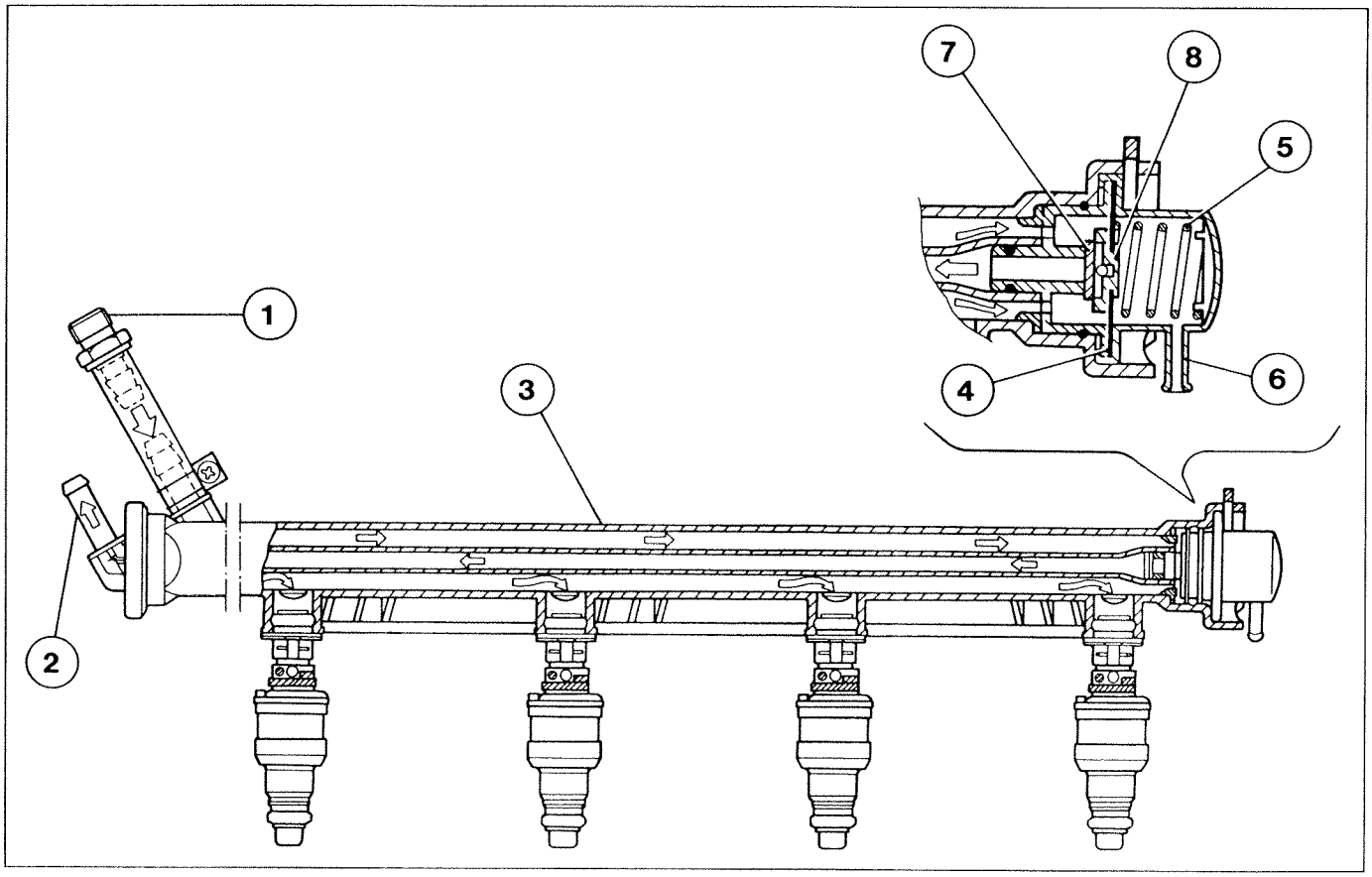

P3U08DX01

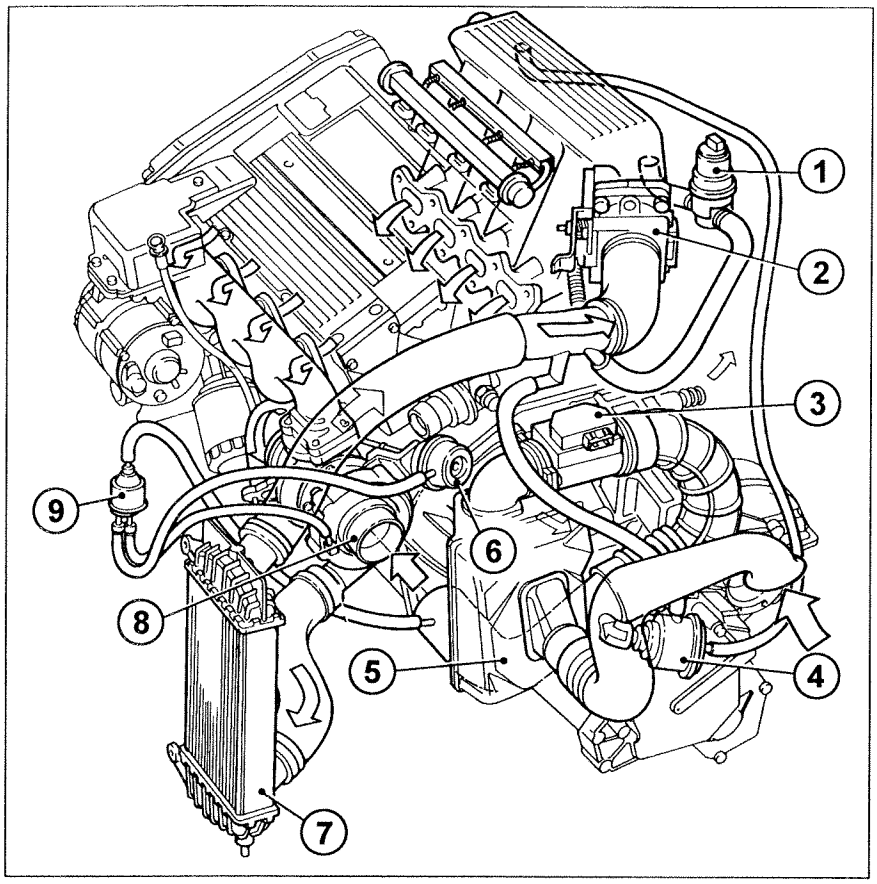

P3U09DX01

Accelerator throttle case or butterfly valve case

AIR INTAKE CIRCUIT DIAGRAM

This consists of the following parts:

1. Engine idle adjustment actuator
2. Throttle case
3. Air flow meter (debimeter)
4. Turbo by-pass valve
5. Air cleaner
6. Turbo regulation actuator (waste-gate)
7. Intercooler
8. Turbocharger
9. Three-way turbocharging control solenoid

The amount of air taken in is determined by the opening of a throttle at the beginning of the intake manifold. The throttle is controlled by the accelerator pedal. Air necessary to keep the engine idling (with throttle closed) and appliances activated is regulated and by-passed solely by the engine idle speed actuator.

The adjustment screw (3) is used to adjust throttle closure correctly in order to prevent fouling against the surrounding circuit; this screw should not be used to adjust idle because it is set by flushing during manufacture and must never be tampered with.

NOTE *The idle adjustment speed by-pass screw has been removed from the butterfly valve case. Its function is carried out by the engine idle speed actuator.*

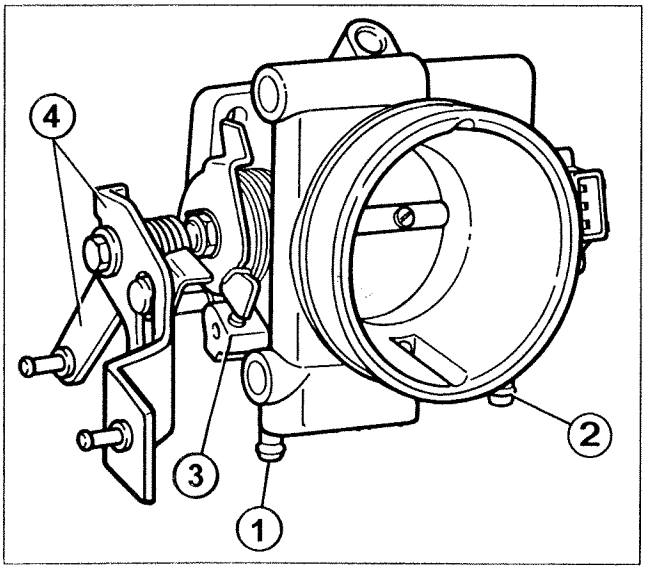

P3U09DX02

1. Attachment for coolant delivery line
2. Attachment for coolant return line
3. Butterfly valve adjustment and antibind screw **(do not touch)**
4. Throttle linkage (desmodromic)

Copyright Fiat Auto

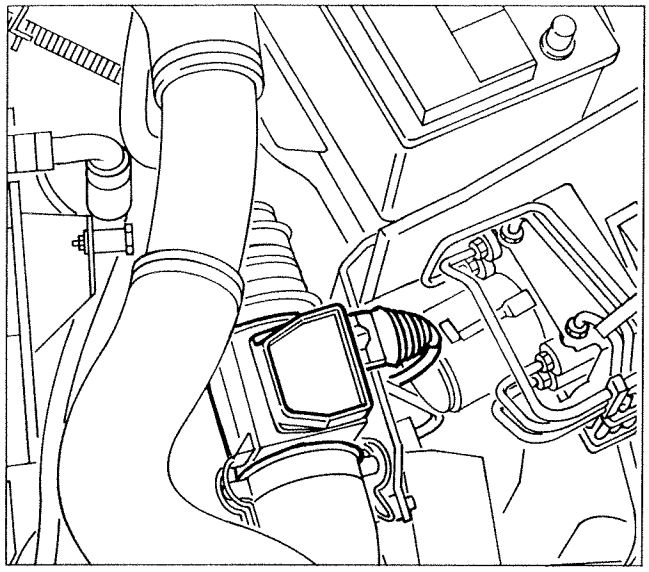

P3U10DX01

Hot wire air flow meter (debimeter)

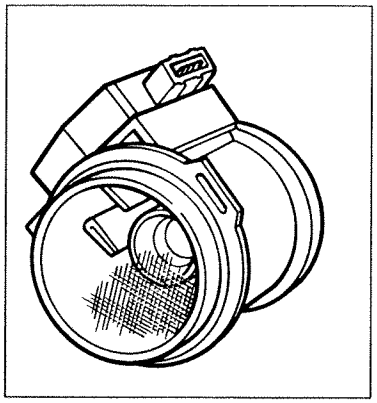

P3U10DX02

1. Support carrying air to hot wire
2. Platinum filament or hot wire
3. Resistance (constantan) for comparing hot wire temperature
4. Filter mesh
6. Terminals
7. Meter ECU in aluminium case

Direct measurement of the air mass taken in by the engine is carried out by a hot wire debimeter.

Air taken in by the engine strikes a filament maintained constantly 100°C above intake air temperature by an electrical current, despite the cooling experienced by the filament when the intake air volume increases.

The volume of air taken in by the engine can be established by the amount of this change.

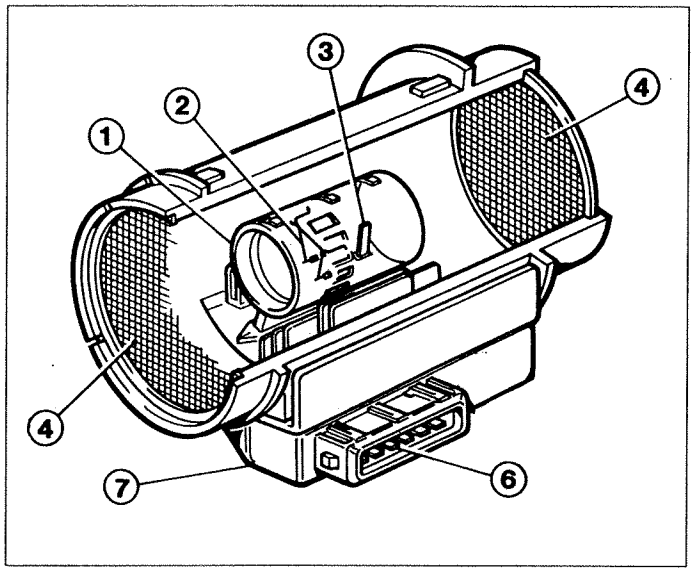

P3U10DX03

The hot wire current variation is proportional to intake air volume, density and speed. Barometric changes due to high altitude do not therefore affect intake air volume directly.

As mentioned previously, the current flowing through the filament is proportional to intake air mass. Measurement accuracy is ensured by the fact that the filament forms part of a precision measuring circuit made up of a Wheatstone bridge and an electronic amplification system of which two components: hot wire (2) and constantan reference resistance (3) are in contact with the mass of air taken into the engine, whereas the other parts of the circuit (resistances) are located in the top part (7) of the meter inside an aluminium container.

Pyrolysis

Whenever the engine stops, the ECU sends a dcurrent through filament (2) for about 1 second. This causes the temperature to rise to 1000°C in order to burn off all the carbon deposits on the wire because otherwise these would alter the 100°C hot wire maintenance current and thus the exact air-fuel ratio calculated by the ECU.

If the hot wire is broken, the engine may continue to work (with very rich mixtures) using data stored in the ECU. This allows the vehicle to be driven to a repair workshop (RECOVERY function). Engines being recovered must not be allowed to cool because otherwise they will not be able to start again.

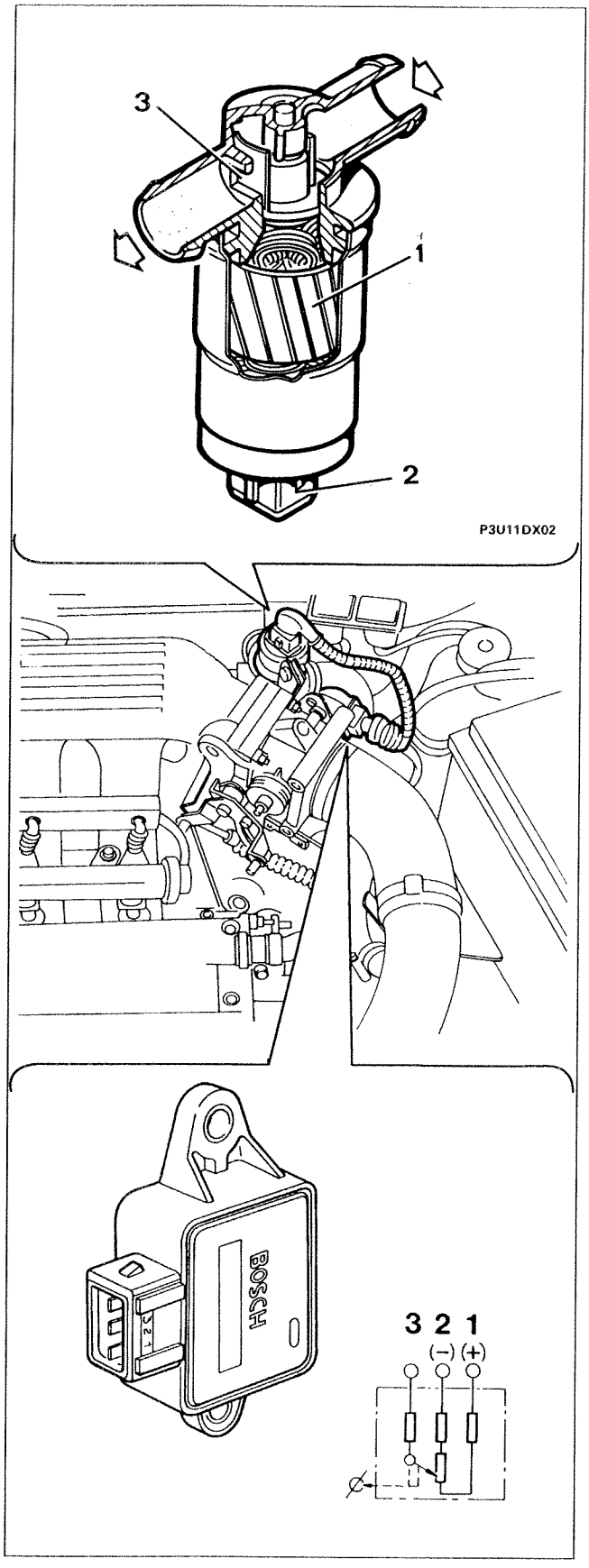

Engine idle speed actuator

This consists of an electric motor, with armature (1) visible, a supply terminal block (2) and rotary distributor (3).
By opening supplementary air passage - in parallel with leakage flow from throttle (with accelerator released) - in the throttle case by varying amounts, this keeps engine idle speed constant automatically whatever the engine load (supplementary appliances on or off, engine warm or cold etc.).
The passage opening brought about by distributor rotation is governed by electrical pulses processed by a special section of the injection ECU, which turns the distributor one way or another according to engine speed.

The actuator must be positioned correctly upon installation. Air flow through the valve is shown by an arrow.

Testing and checking idle speed actuator

Use a Fiat/Lancia tester to check actuator operation. If engine idles unevenly, first check condition of air sleeves to ensure no leaks are present. Then check sleeves are properly fitted.
Engine idle speed must be 850 ± 50 rpm.

Throttle valve position sensor

This consists of a potentiometer whose mobile part is controlled directly by the throttle valve spindle.
During operation, the control unit supplies the potentiometer at a voltage of 5 Volt applied to pins (1) and (2).
Pin 3 receives a voltage inversely proportional to throttle valve opening. According to the voltage directed to pin 3, the ECU identifies throttle valve opening and corrects the mixture concentration accordingly.
When the throttle is closed, an electrical system of about 0.5 Volt reaches the control unit, which identifies idle and cut-off conditions (discerning between them on the basis of rpm level).
The potentiometer automatically recognises the throttle closed position. At this point, the "self-adaptive" **function comes into play and eliminates potentiometer adjustments.** Alterations in throttle closure position due to wear can now be compensated for as time goes on.

Copyright Fiat Auto

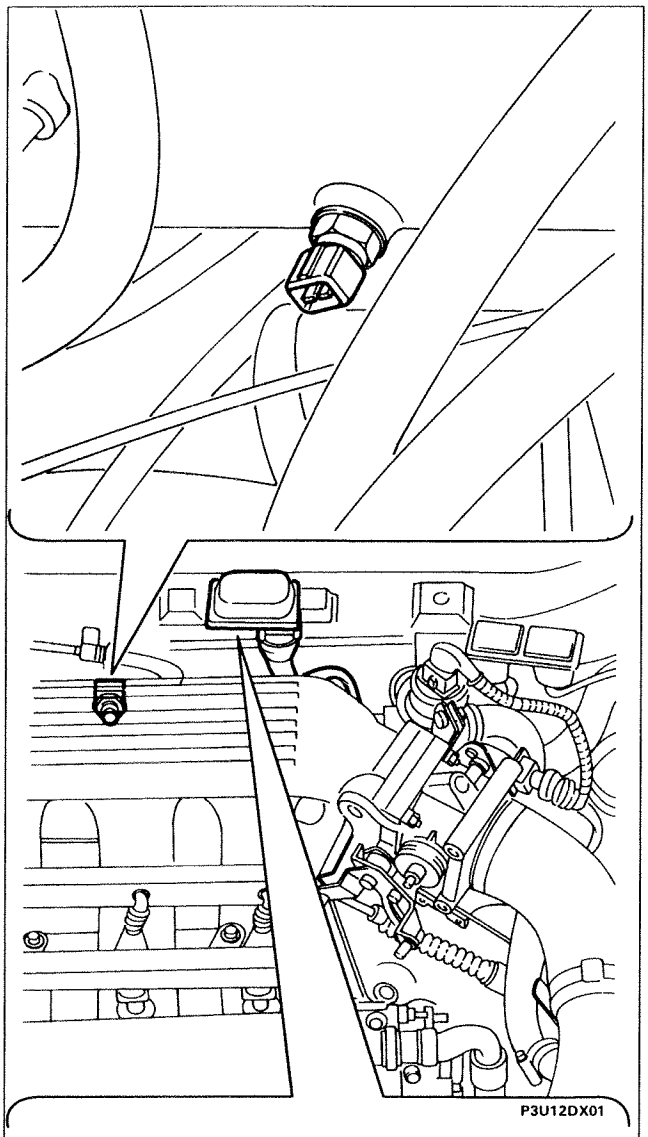

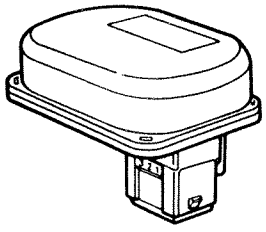

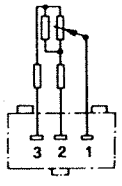

Wiring diagram

P3U12DX02

Intake air temperature sensor

The intake air temperature sensor is located on the intake manifold downstream of the throttle valve.

This sensor measures the temperature of turbocharged air taken into the cylinders.

The ECU uses this information, together with data from the debimeter, to compute the amount of air taken in by the engine and thus control injection times

Information sent to the ECU is also used by the unit to limit turbo pressure if the air temperature reaches excessive levels.

Absolute pressure sender unit (barometric capsule)

The absolute pressure sender unit is a sensor that sends the injection-ignition ECU information on changing barometric pressure conditions during vehicle use.
This sensor sends the ECU a signal proportional to the sensor input voltage and barometric pressure.
The information is used to limit turbo pressure at high altitude. This strategy is necessary to protect against the danger of the compressor turbine turning too fast because rarified air at altitude and excessive performance demands by the driver could force the turbine to turn too fast before achieving the required turbo pressure.

Turbocharging system (Pierburg valve)

Turbocharging is ensured by turbocharger (7), with turbopressure controlled by a three-way (A, B and C) Pierburg element (4) supplied at 12 V by a system relay and controlled permanently by the electronic injection/ignition control unit (5) via pin 21.
Duct A is connected via sleeve (1) to actuator (6) of the Waste-gate.
Duct B is connected through sleeve (2) to the turbo duct of turbocharger (7).
Duct C is connected via sleeve (3) to the turbocharger intake duct.

- When the solenoid is operating under duty-cycle conditions and not activated by the ECU, cylinder D closed channel C, to leave channels A and C in communication. Turbo pressure from duct B therefore acts on actuator (6) of the Waste-gate. Turbo pressure is therefore regulated solely by the mechanical waste-gate setting.
- When the solenoid is activated by the electronic control unit, cylinder D D is magnetised by the coil winding and begins to pulse under the effect of a duty-cycle signal. Duct C therefore opens for varying lengths of time. These opening times vary on the basis of sample curves memorised in the control unit, which take into account intake duct pressure, rpm and throttle valve position.

When duct C opens, part of the pressure previously acting on waste-gate actuator (6) is vented through sleeve (3) to the turbocharger intake duct to bring about an increase in turbo pressure.

NOTE *Ducts A and B of the three-way solenoid are marked with a spot of blue paint for duct A and red paint for duct B.*
When this device is serviced, take great care to connect lines correctly:
- *duct A (blue spot) is connected to actuator (6);*
- *duct B (red spot) is connected to turbo boost control.*

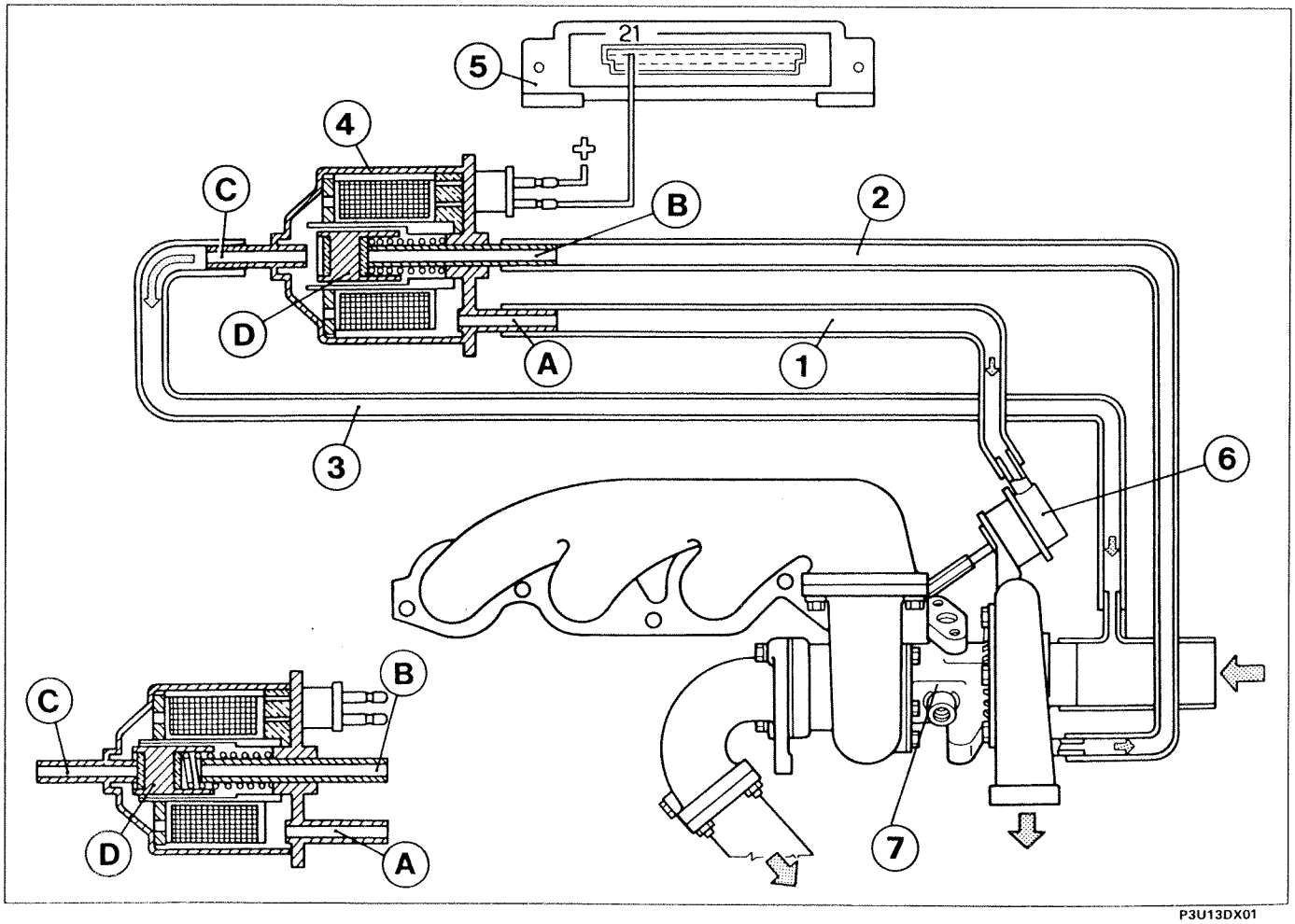

P3U13DX01

10.

ELECTRIC-ELECTRONIC SYSTEM

Connects all Bosch Motronic M 2.7 injection/ignition system components and provides them with electricity.
It consists mainly of an **electronic control unit** (ECU) and the following parts.

- Two main control relays (electric fuel pump - control unit)
- Throttle valve position sensor
- Coolant temperature sensor
- Fuel pump submerged in tank
- Four injectors
- Hot wire intake air flow meter (debimeter)
- Inlet air temperature sensor
- Engine idle speed actuator
- Rpm and TDC sensor
- Knock sensor
- Ignition coil with four high tension outlets
- Four spark plugs
- Lambda probe
- Hall-effect injection timing sensor
- Turbo control solenoid (Pierburg)
- Absolute pressure sender unit (barometric capsule)
- Ignition power module
- Inertia safety switch

Injection-ignition ECU (control unit)

The Bosch Motronic M 2.7 injection-ignition system fitted is specific to this version.
It consists of hybrid thick film circuits and is connected to the electrical wiring by means of a multiple connector with **55 connections** (or poles).
These receive data on all engine service conditions from the various sensors:

- intake air quantity
- inlet air temperature
- coolant temperature
- engine rpm and TDC
- throttle valve position
- vehicle speed signal
- knock sensor
- lambda signal
- injection timing signal

The ECU also receives a pneumatic signal through a pipe connected to the air intake manifold. This is used to compute supply pressure.

The ECU processes these signals and sends out electric pulses of different lengths to the injectors, which are **connected individually the the control unit** . The injectors inject the exact amount of fuel necessary to form the mixture in sequential, staged manner.

According to the signals processed, the ECU pilots the actuators, calculates the optimum ignition advance level and demagnetizes the two ignition coil primary windings.

Diagram showing electrical connections between control unit - sensors - actuators

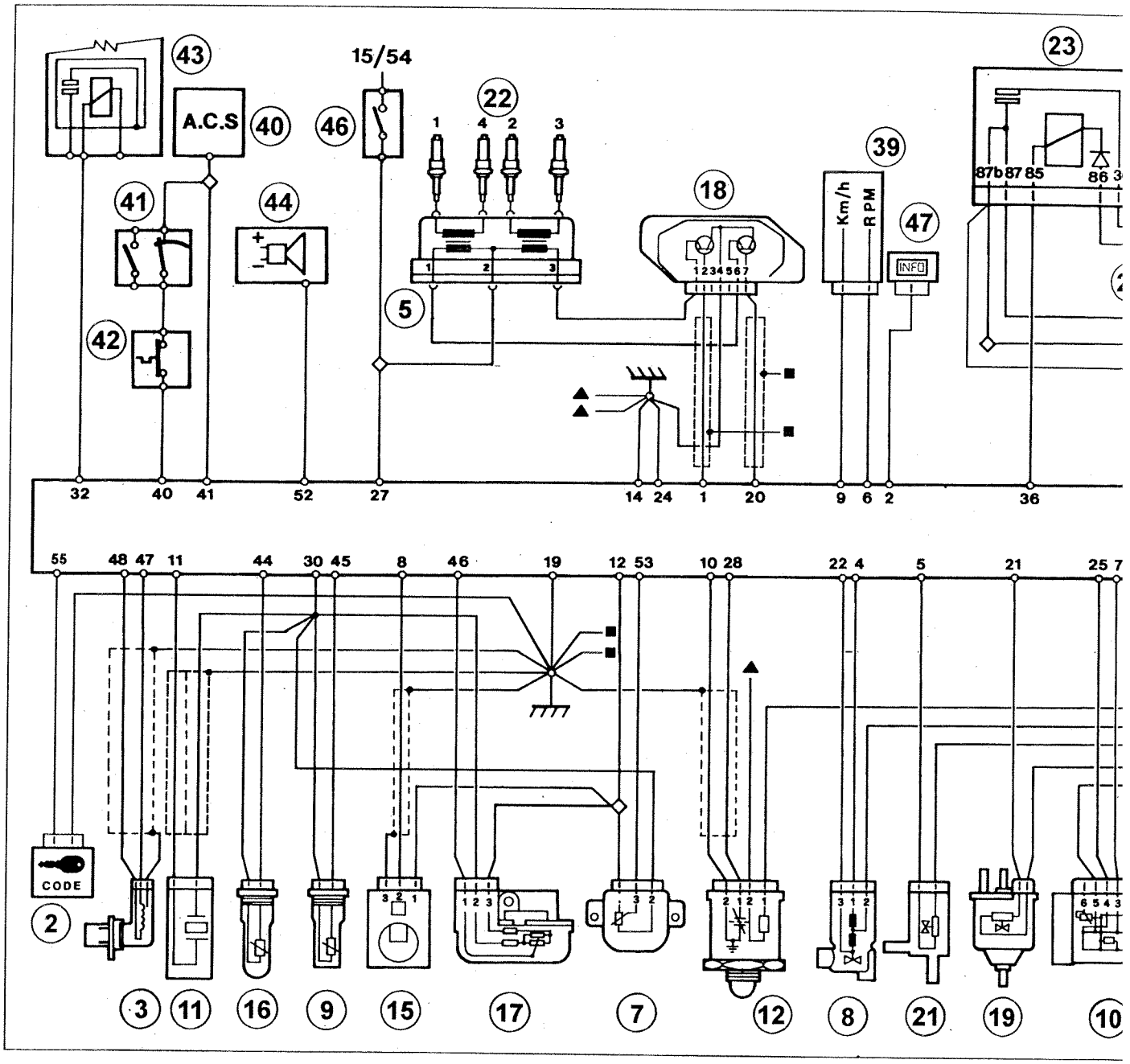

1. Bosch Motronic M2.7 electronic injection-ignition control unit
2. Lancia CODE control unit
3. Rpm and TDC sensor
5. High tension coil with four outlets
7. Throttle valve position sensor
8. Engine idle speed regulation actuator
9. Coolant temperature sensor
10. Air flow meter (debimeter)
11. Knock sensor
12. Lambda probe
14. Injectors and fuel manifold
15. Injection timing sensor
16. Inlet air temperature sensor
17. Absolute pressure sensor (barometric sensor)
18. Ignition power module
19. Three-way turbocharging control solenoid
21. Vapour recirculation solenoid
22. Spark plugs
23. Motronic injection-ignition system relay Motronic (injector control unit, idle adjustment actuator, vapour recirculation solenoid, turbo control solenoid, air flow meter, system warning light)
24. Motronic injection-ignition system relay (electric fuel pump, lambda probe heating)
25. Lambda probe preheating circuit fuse

Copyright Fiat Auto

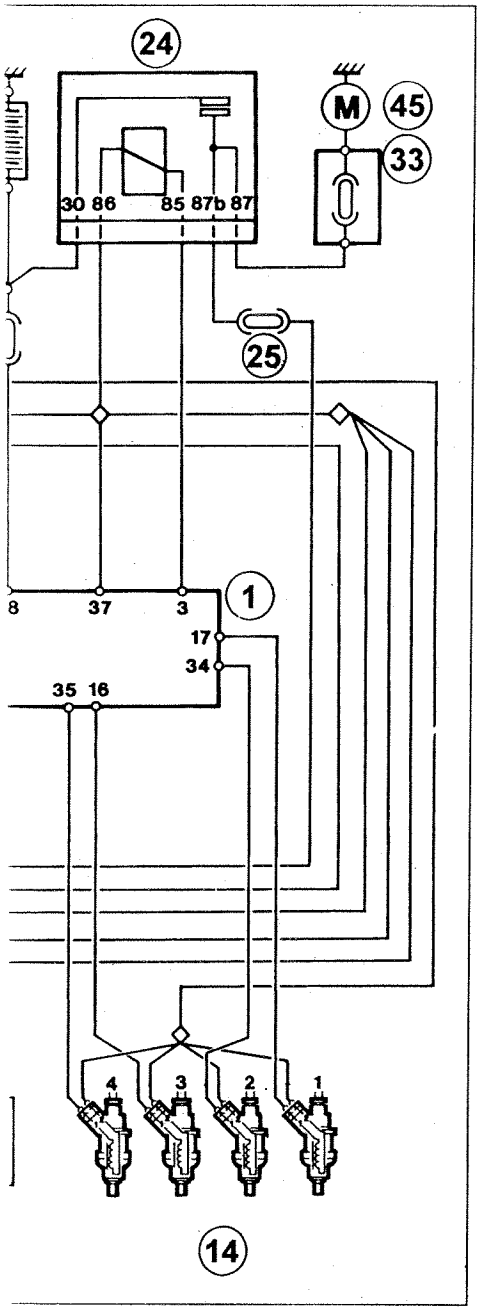

P3U15DX01

). System fuse (injection-ignition)
). Turbo by-pass valve
. Fuel pump fuse on junction unit
). Instrument panel
). Electronic control unit for automatic air conditioner
. Three stage pressure switch
. Anti-frost thermostat
. Automatic air conditioner compressor coupling relay
. Car alarm
. Electric fuel pump
). Ignition switch
. Infocenter

ON-IGNITION SYSTEM COMPONENTS IN

1. Bosch Motronic M2.7 electronic injection-ignition control unit
2. Diagnostic socket
3. Rpm and TDC sensor
4. Engine pulley ring gear (phonic wheel)
5. High tension coil with four outlets
6. Throttle case
7. Throttle valve position sensor
8. Engine idle speed regulation actuator
9. Coolant temperature sensor
10. Air flow meter (debimeter)
11. Knock sensor
12. Lambda probe
13. Fuel pressure regulator
14. Injectors and fuel manifold
15. Injection timing sensor
16. Inlet air temperature sensor
17. Absolute pressure sensor
18. Ignition power module
19. Three-way turbocharging control solenoid
20. Vapour recirculation solenoid
21. Motronic injection-ignition system relay
22. Motronic injection-ignition system relay
23. Fuse for lambda probe preheating circuit
24. System fuse (injection-ignition)

Identifying connections on control unit

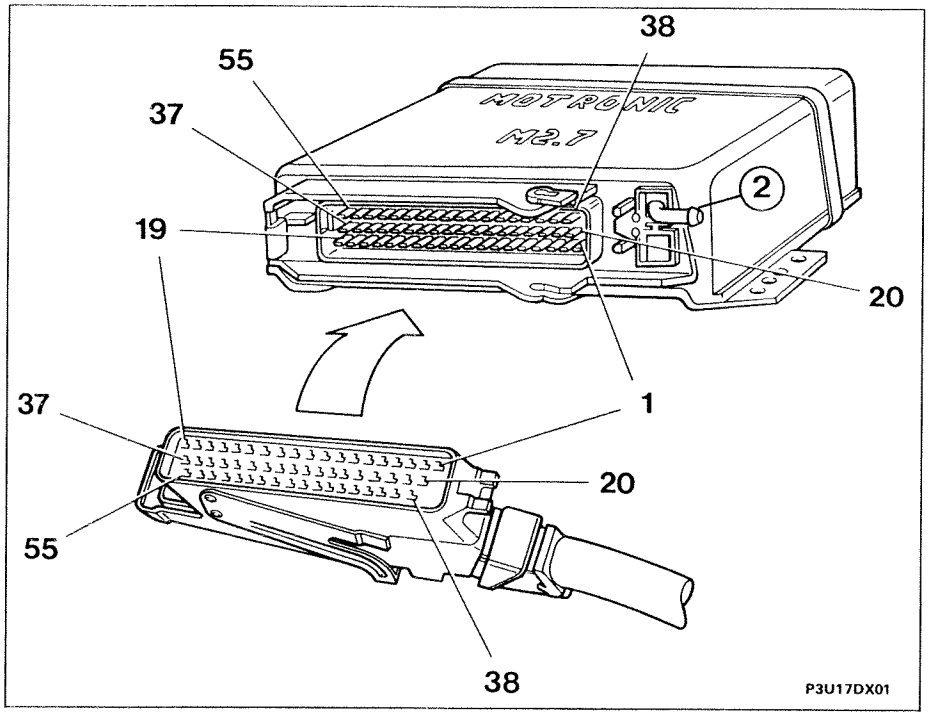

2. Pressure/vacuum intake pipe on intake manifold

1. Ignition power module control for cylinders 2 - 3
2. System failure indicator
3. Enablement for pump and lambda probe relay
4. Engine idle speed actuator
5. Fuel vapour cut-off solenoid
6. Engine rpm signal output
7. Air flow meter signal
8. Timing sensor signal
9. Vehicle speed signal input
10. Lambda probe earth
11. Knock sensor signal
12. Power to timing sensor, butterfly valve potentiometer and absolute pressure sensor
13. Not connected
14. Earth on engine
15. Not connected
16. Cylinder 3 injector control
17. Cylinder 1 injector control
18. Direct battery supply (+30)
19. Earth on engine
20. Ignition power module control cylinders 1 - 4
21. Turbo control solenoid
22. Engine idle speed actuator
23. Not connected
24. Earth on engine
25. Air flow meter
26. Air flow meter
27. Locked power source (+15)
28. Lambda probe signal
29. Not connected
30. Sensor supply: air temperature, coolant temperature, knock, throttle position and absolute pressure
31. Not connected
32. Air conditioner compressor relay signal output
33. Not connected
34. Cylinder 2 injector control
35. Cylinder 4 injector control
36. System supply relay enablement
37. Positive (+30) from system relay
38. Not connected
39. Not connected
40. A/c signal input
41. A/c signal input
42. Not connected
43. Not connected
44. Coolant temperature sending unit signal
45. Coolant temperature sending unit signal
46. Absolute pressure sensor
47. Rpm and TDC sensor.
48. Rpm and TDC sensor.
49. Not connected
50. Not connected
51. Not connected
52. Signal for car alarm (if fitted)
53. Butterfly valve position sensor
54. Not connected
55. Two-way line for Lancia Code control unit

Copyright Fiat Auto

10.

DIAGRAM OF INPUT AND OUTPUT BETWEEN ECU AND SYSTEM SENSORS AND ACTUATORS FOR BOSCH MOTRONIC M2.7 SYSTEM

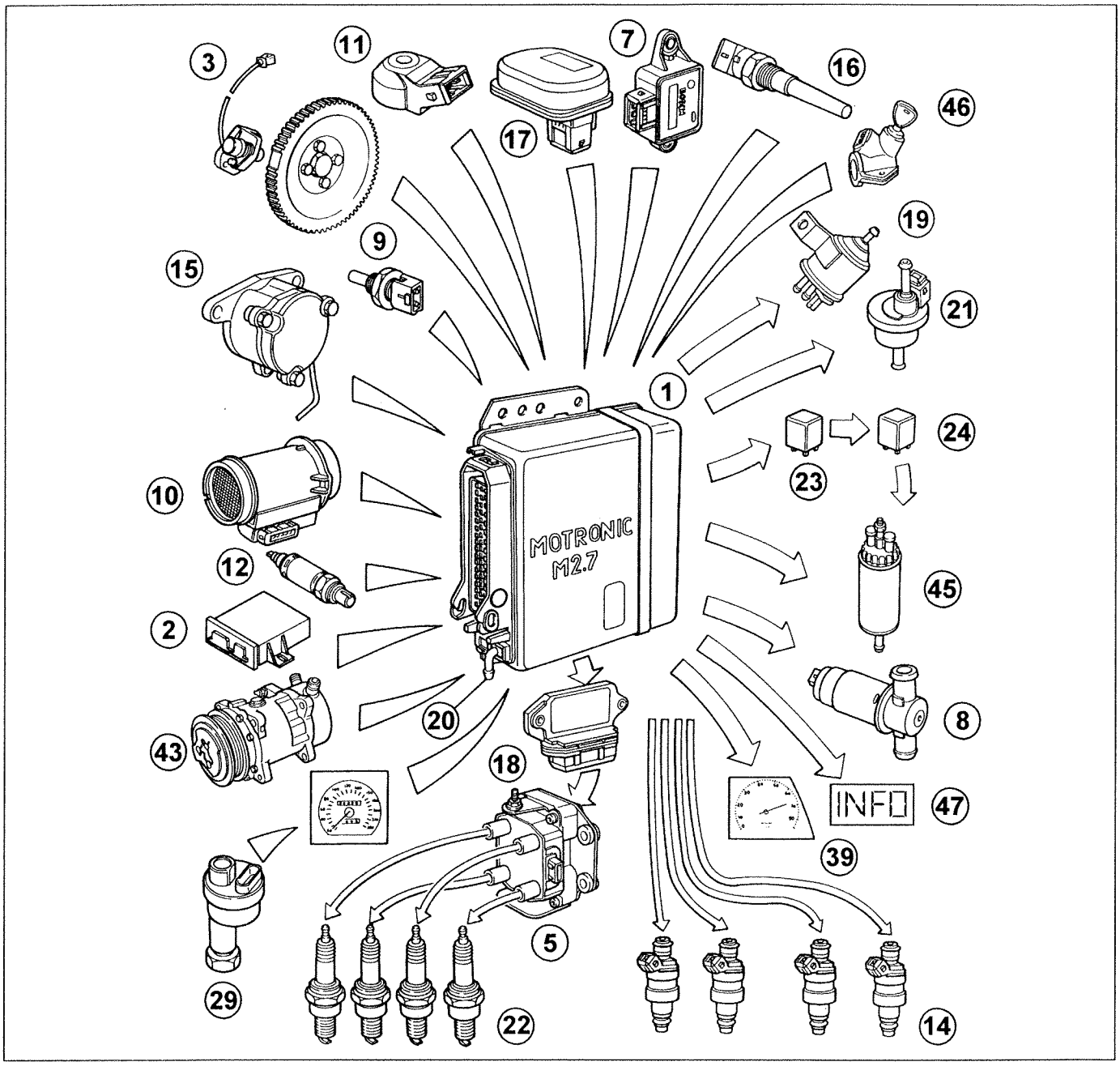

P3U18DX01

1. Bosch Motronic M2.7 electronic injection-ignition control unit
2. Lancia CODE control unit
3. Rpm and TDC sensor
5. High tension coil with four outlets
7. Throttle valve position sensor
8. Engine idle speed regulation actuator
9. Coolant temperature sensor
10. Air flow meter (debimeter)
11. Knock sensor
12. Lambda probe
14. Injectors and fuel manifold
15. Injection timing sensor
16. Inlet air temperature sensor
17. Absolute pressure sensor (barometric sensor)
18. Ignition power module
19. Three-way turbocharging control solenoid
20. Pipe carrying pressure/vacuum from intake manifold
21. Vapour recirculation solenoid
22. Spark plugs
23. Motronic injection-ignition system relay
24. Fuel pump contactor, lambda probe heating
29. Speedometer sensor
39. Instrument panel (rev counter)
43. Heating/ventilation system
45. Electric fuel pump
46. Ignition switch
47. Infocenter

Bosch M 2.7 system control relays

The exitation circuit of the 2 relays is supplied by turning the ignition key to MARCIA and AVVIAMENTO.

The operating strategy is as follows:

a. With ignition key in MARCIA position, the ignition switch supplies (from 15/54) the ECU, which in turn closes exitation circuit of relay (23) through terminal (pin) 36. This suplies injectors, control unit, fuel vapour recirculation solenoid, engine idle speed actuator and exitation circuit of fuel pump relay (24).

b. The exitation circuit of relay (24) is supplied by relay (23), while the circuit is closed by terminal (pin) 3 in order to control the fuel pump operating strategy. Relay (24) also supplies the Lambda probe preheater coil.

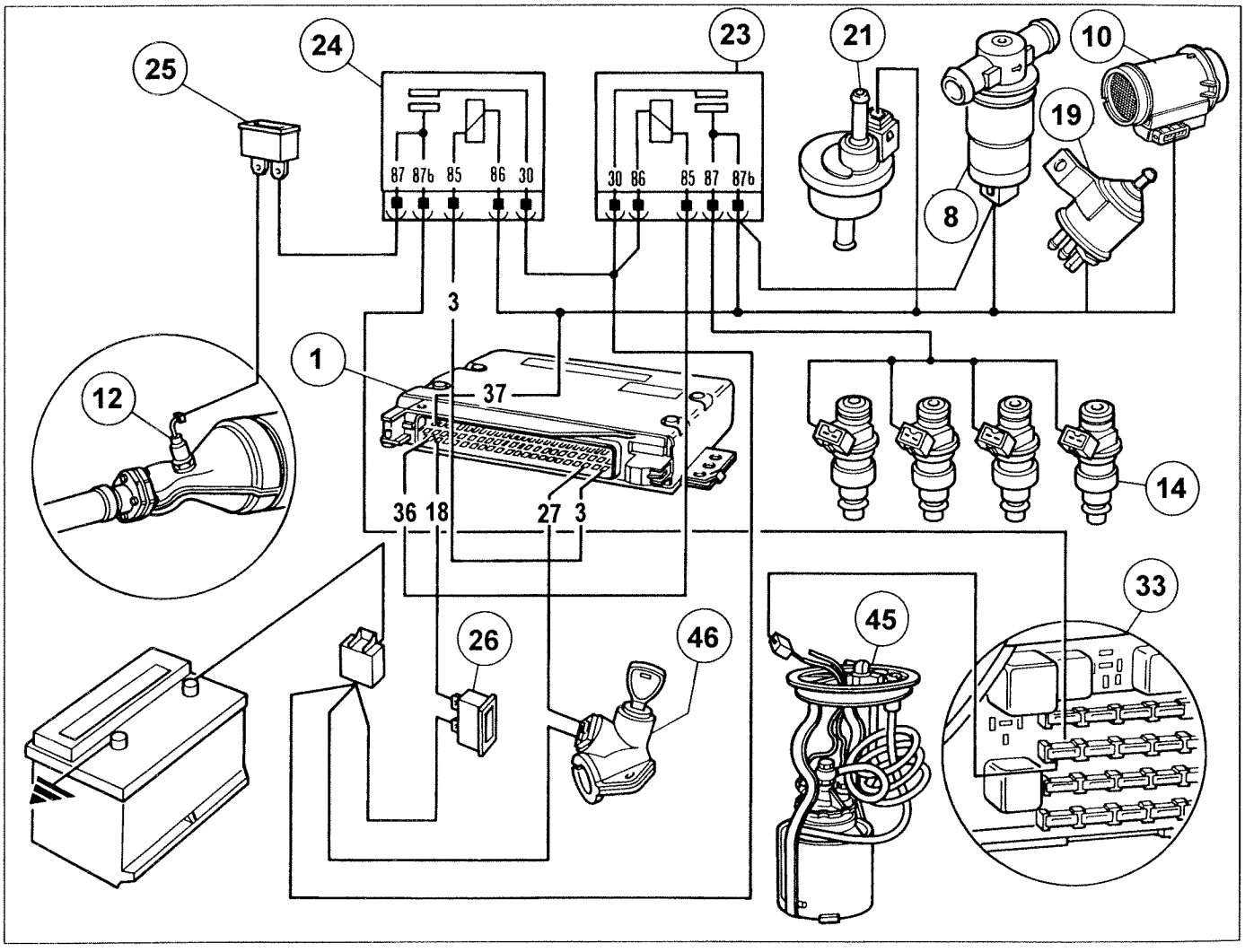

P3U19DX01

1. Electronic injection-ignition control unit
8. Engine idle speed regulation actuator
12. Lambda probe
14. Fuel injectors
21. Fuel vapour recirculation solenoid
23. Relay for control unit, injectors, engine idle adjustment actuator, fuel vapour recirculation solenoid
24. Fuel pump and lambda probe heating relay
25. Fuse protecting lambda probe heating
26. Fues protecting injection-ignition system relay
33. Connector and fuse block
45. Electric fuel pump

Copyright Fiat Auto

Injection timing sensor

The Bosch Motronic M2.7 system is sequential and phased, i.e. fuel injection takes place in sequence for each cylinder during the intake phase.
To achieve this, the ECU uses a signal that determines the injection point on the basis of a signal from the rpm and TDC sensor.

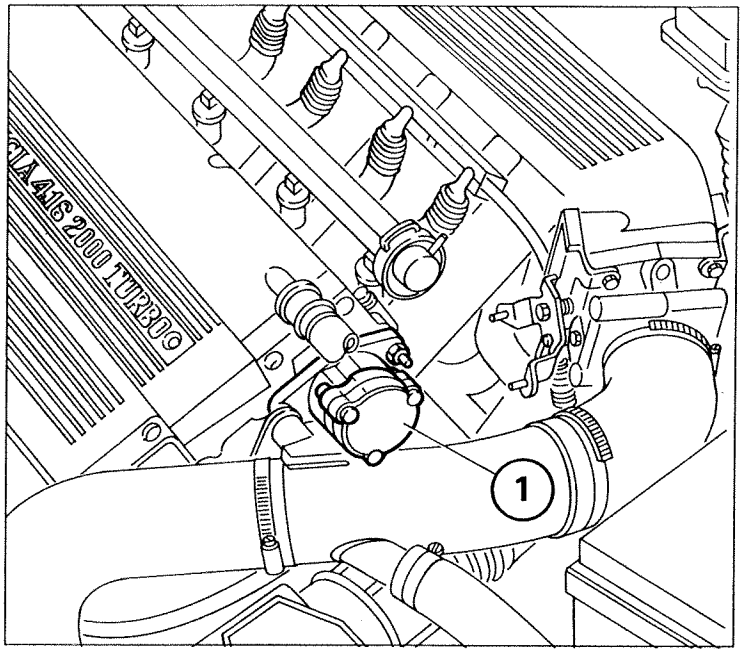

P3U20DX01

The signal sent to the ECU is produced by a sensor fitted behind the camshaft, intake end.

The sensor consists of a Hall effect transducer, a rotor and a cover.

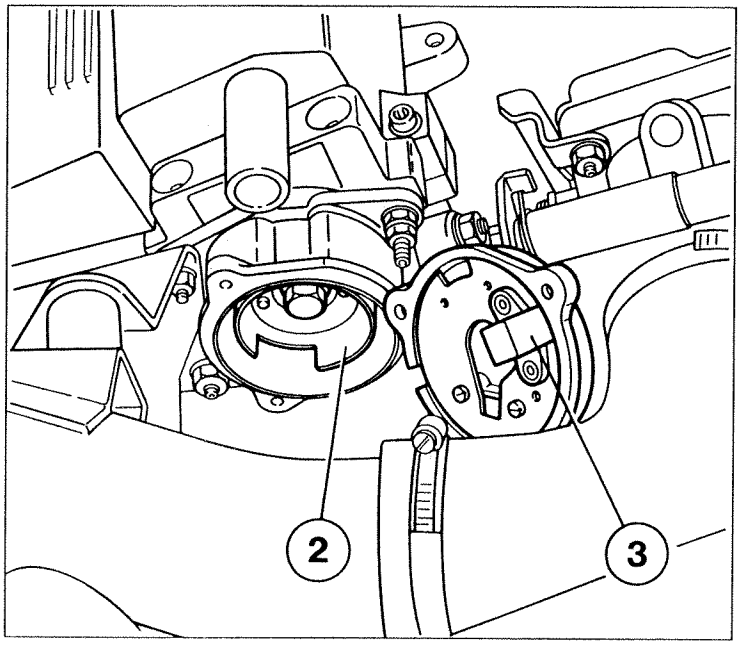

P3U20DX02

The rotor consists of a sheet steel ring with a slot (missing part).
The rotor ring moves to cover the transducer and set up a high signal (5V); when the Hall transducer is free (missing part) a low signal is generated (0V)
Low and high signals therefore alternate once every two crankshaft turns and specifically when cylinder no. 4 is in compression phase 108° before TDC.
This signal, together with the rpm and TDC signal, allows the ECU to recognise the cylinders and determine the point of injection.

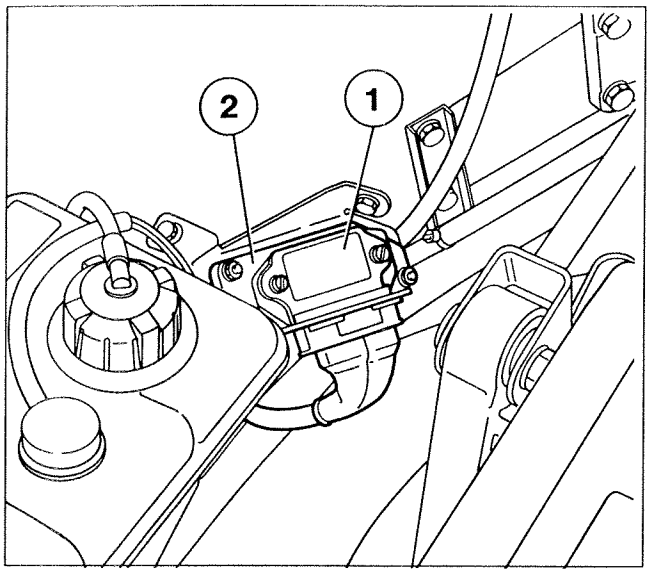

P3U21DX01

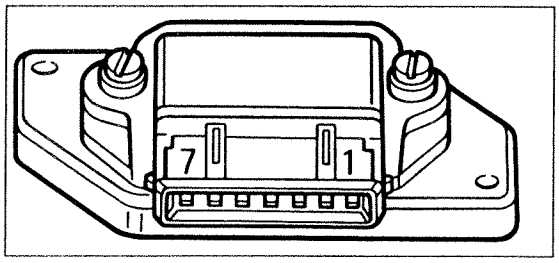

P3U21DX02

Ignition power module

1. Power module
2. Heat dissipating plate

The power module operates as an electronic switch that controls current in the ignition coil primary winding by means of ignition pulses from the control unit.
The power module also regulates current through the coil so that a constant level of 7.5A is maintained regardless of battery voltage and engine speed. In this way, the coil is always fully charged and the spark produced by the plugs is always optimum.
To prevent coil overheating if the ignition is triggered with the engine off, the power module is fitted with a resting cut-off device that almost completely cuts out the flow of current to the coil when ignition pulses from the control unit cease.

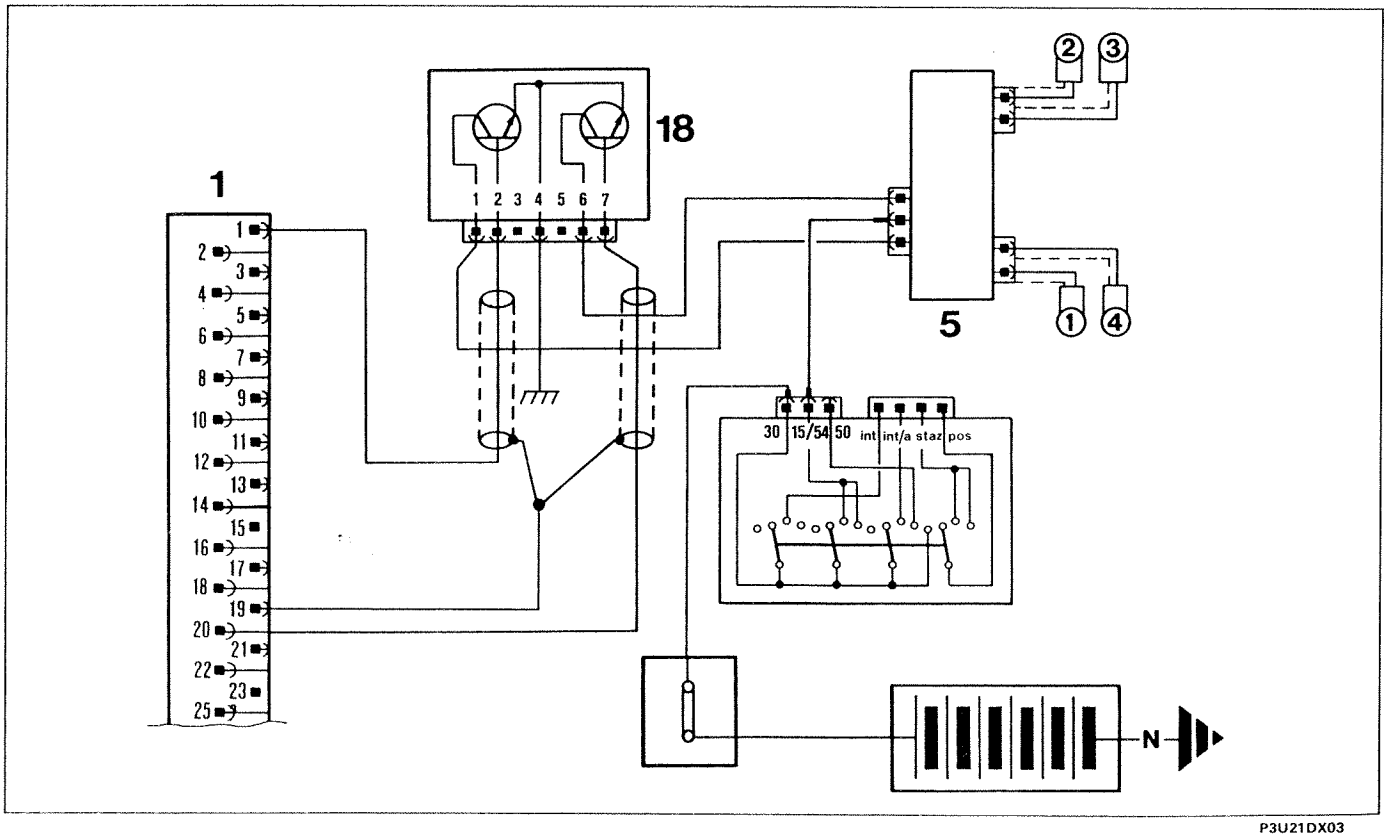

P3U21DX03

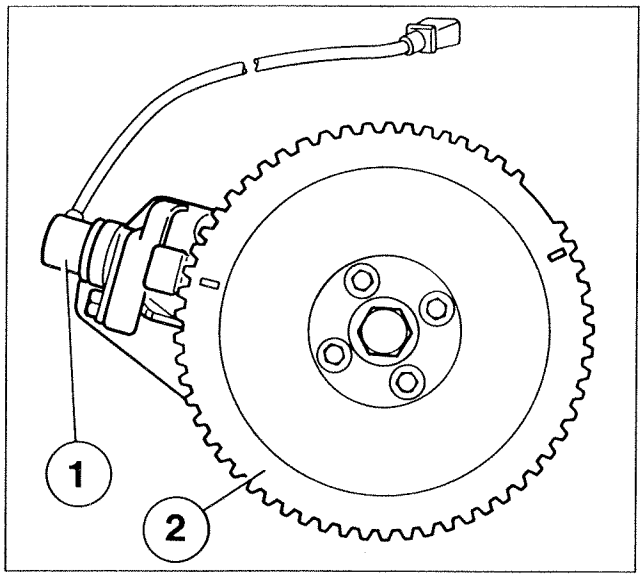

P3U22DX01

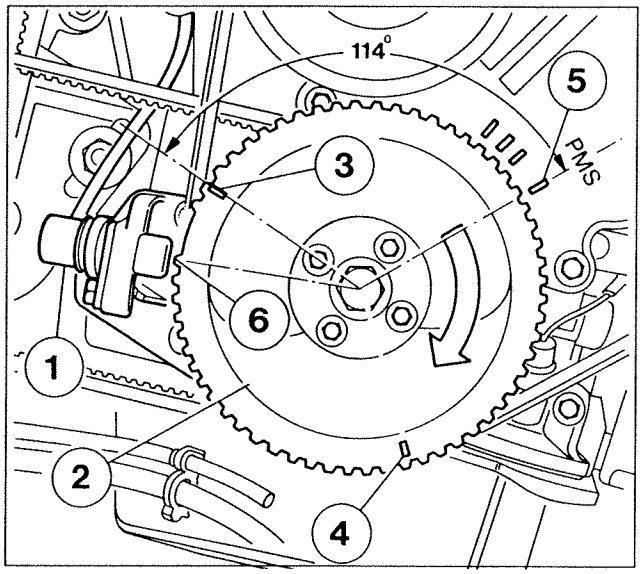

P3U22DX02

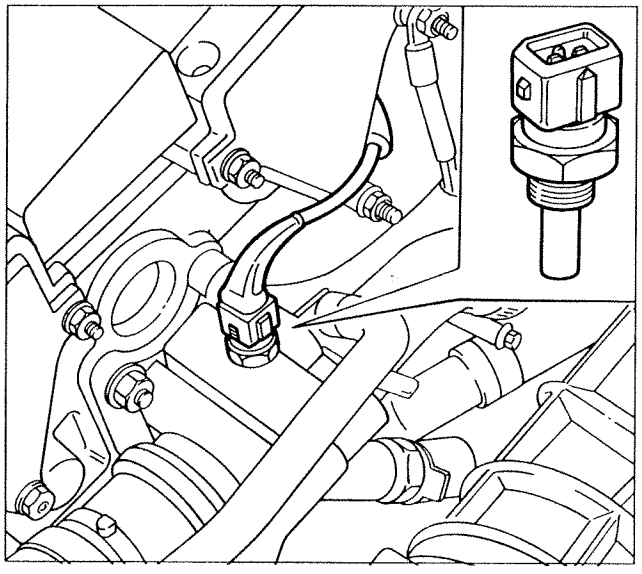

P3U22DX03

RPM and TDC sensor

The sensor used for measuring rpm and TDC is inductive. In other words, it works by altering the magnetic field generated by teeth passing in front of a toothed pulley (phonic wheel) fitted inside the crankshaft.

The teeth passing in front of the sensor alter the gap between pulley and sensor. The dispersed flow thus alters to set up an alternating voltage with amplitude dependent on rpm.

The resistance value measured using a digital multimeter must be between 486 and 594 Ω at 20 °C.

The phonic wheel consists of 58 teeth plus a gap equivalent to two missing teeth.

The reference defined by the space of the two missing teeth is used as a basis for measuring the synchronism point (TDC).

The synchronism point is delimited by tooth (6). When this passes beneath the sensor, the crankshaft is located with piston pair 1-4 at 114° before TDC.

This signal is used by the ECU to compute the ignition advance angles.

Coolant temperature sensor

The voltage this sensor supplies to the ECU varies according to engine temperature in order to correct air flow meter data. According to the signal received from the sensor, the ECU can therefore increase fuel injection time to provide the necessary enrichment and make up for fuel loss due to condensation of fuel particles on intake ducts when the engine is cold.

CIRCUIT FOR CHECKING HARMFUL EXHAUST EMISSIONS

Engine exhaust assembly

In order to meet stringent specifications covering noxious emissions from internal combustion engines, the vehicle is fitted with a four-channel hot lambda probe for measuring exhaust gas oxygen content and a catalytic converter. See section on 1998 20v engine for a full description of the system.

Fuel evaporation control and vapour recovery circuit

The fuel evaporation control system adopted on this version is similar to that on the 1998 20v (described in this manual) as far as unboosted engine operation is concerned.

During turbocharging, because the pressure in the intake manifold exceeds the pressure in the evaporation control circuit, the cut-off solenoid controlled by the ECU does not open and vapours collected in the active carbon filter cannot be dissipated.

To prevent the filter becoming saturated during long periods of boosted operation, the circuit contains a pneumatic "Siemens" valve which brings the active carbon filter into communication with the air intake duct upstream of the compressor when the reference pressure (pressure present in intake manifold) exceeds atmospheric pressure.

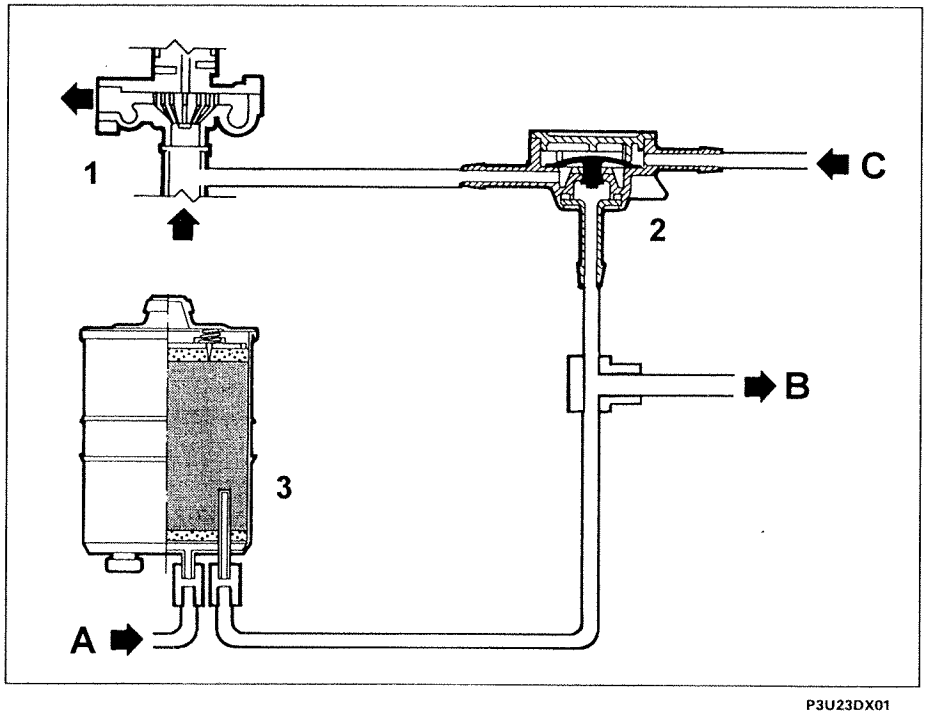

P3U23DX01

1. Turbocharger
2. Pneumatic petrol vapour cut-off valve (SIEMENS)
3. Active carbon trap filter

A. Petrol vapours from tank
B. Petrol vapours to cut-off solenoid controlled by control unit
C. Intake manifold reference pressure

Copyright Fiat Auto

Diagram showing circuit for recirculation and recovery of blow-by gases

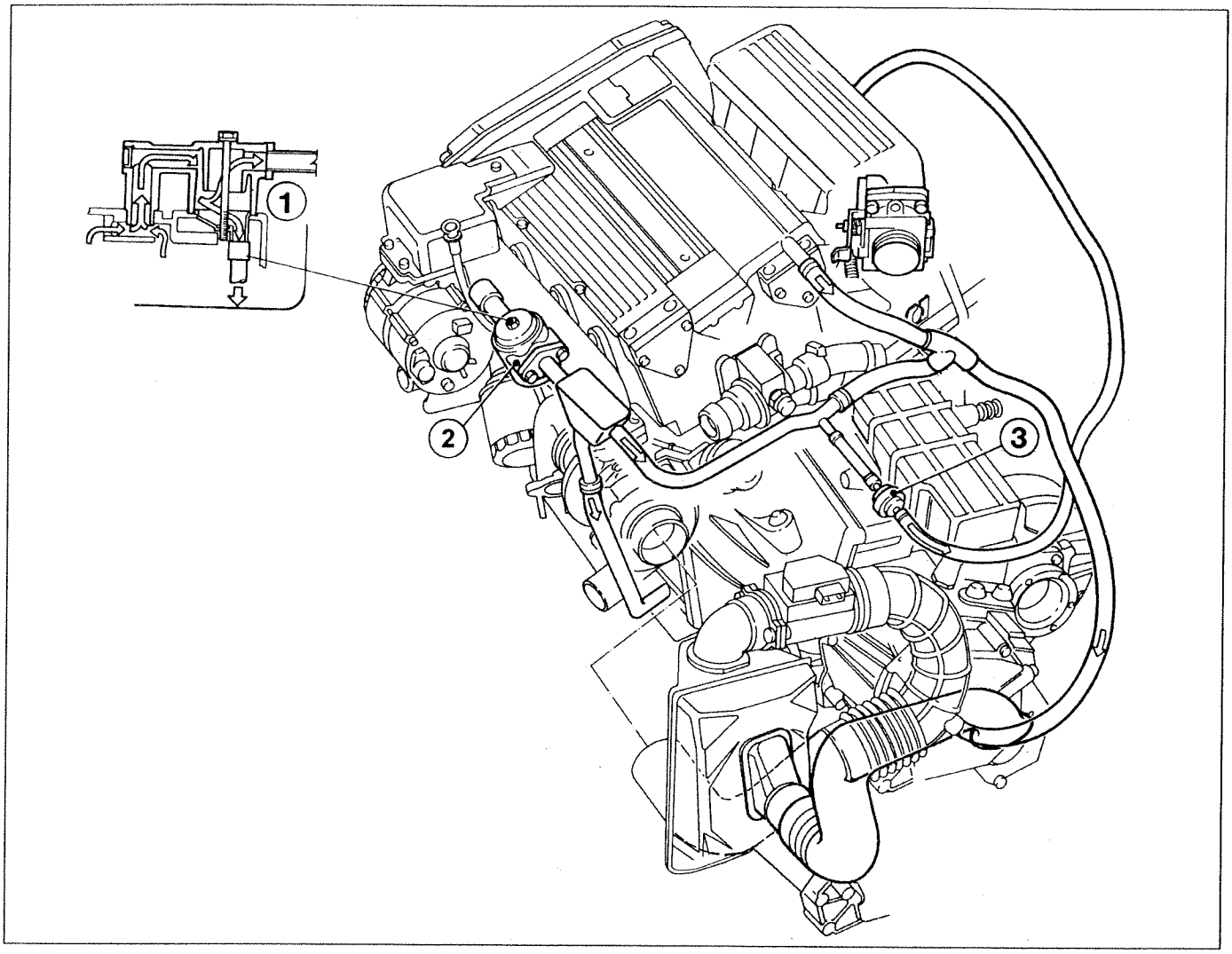

P3U24DX01

The purpose of this system is to recirculate oil vapours and noxious gases produced inside the power unit during operation.

Vapours are taken from two vent points on the engine, located on the crankcase and intake end cylinder head cover resspectively. Vapour flows from the crankcase through a cyclone separator (1) where they are subjected to an initial condensation stage which returns a proportion of the vapours tothe sump. The remaining vapours flow on to a second separator (2).

The second separator encloses the vapours and separates them through condensation in the residual oil and gas. The collected oil is carried directly to the sump through a pipe.

Residual gases and gases from the cylinder head are taken into the intake duct directly and reabsorbed into the internal combustion cycle. To ensure the entire circuit is constantly under pressure, a one-way valve (3) is connected between the delivery line to the separator and the intake manifold.

The valve consists of a plastic case containing a membrane and a calibrated spring **(the word crankcase is shown on the black part of the valve to ensure correct installation).**

When the engine is idling, the vacuum in the intake manifold raises the valve diaphgram and draws in vapours from the crankcase.

When the engine is turbocharged, the pressure in the manifold closes the valve so that the crankcase is not put under pressure. In this case, gases are drawn in by the vacuum in the intake duct upstream of the turbocharger.

CHECKS AND ADJUSTMENTS TO BOSCH M2.7 INJECTION/IGNITION SYSTEM ADDITIONAL TO DIAGNOSIS WITH FIAT/LANCIA TESTER

OBSERVE THE FOLLOWING PRECAUTIONS WHEN WORKING ON VEHICLES WITH MOTRONIC INJECTION-IGNITION SYSTEMS:

- *never start the engine when the electrical terminals are poorly connected or loose on the battery poles;*
- *never use a quick battery charger to start the engine;*
- *never disconnect the battery from the car circuit with the engine running;*
- *when charging the battery quickly, first disconnect the battery from the vehicle circuit;*
- *if the vehicle is placed in a drying oven after painting at a temperature of more than 80° C, first remove the injection/ignition ECU;*
- *never connect or disconnect the ECU multiple connector with the ignition key in MARCIA position;*
- *always disconnect battery negative lead before carrying out electrical welding on vehicle.*

Note that his system has a stand-by memory containing all learnt self-adaptive parameters. Because all this information is lost when the battery is disconnected, this operation should only be carried out when absolutely essential.

For the following operations:

Removing - refitting fuel filter

Removing - refitting electric fuel pump

Adjusting throttle cable

Checking engine idle speed and checking levels of polluting emissions

Proceed as described for 1998 20v version.

Removing - refitting electronic control unit

Proceed as described for the 1998 20v version. Note that pipe connected to intake manifold must be disconnected in this case.

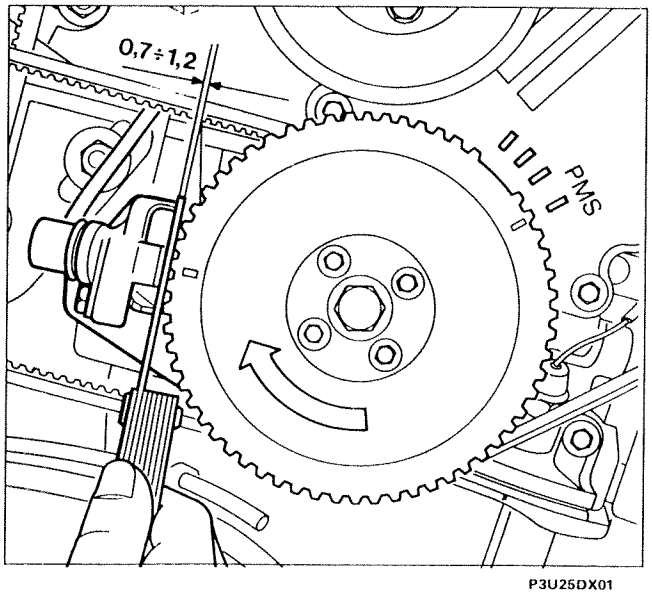

P3U25DX01

Checking rpm and TDC sensor gap and setting angle.

Checking gap

Gap between sensor and phonic wheel must be 0.7 - 1.2 mm.

1. Rpm and TDC sensor
2. Phonic wheel
3. TDC reference notch on phonic wheel
4. Reference notch on phonic wheel for correct angular positioning of rpm and TDC sensor
5. TDC reference notch on timing cover
6. Synchronism tooth

Copyright Fiat Auto

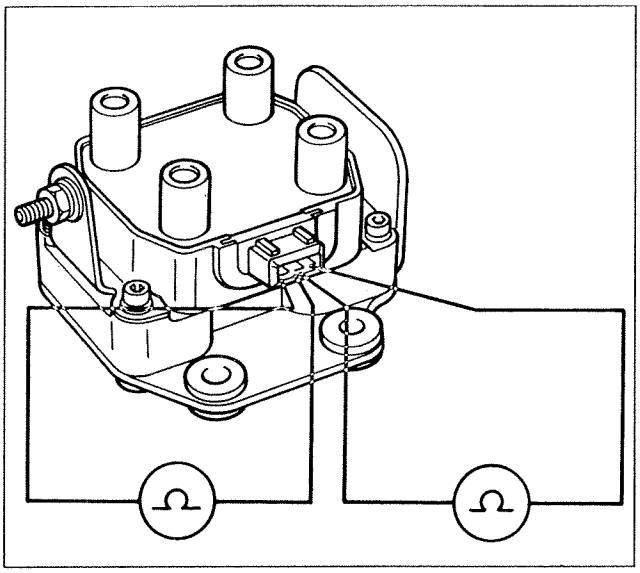

P3U26DX02 P3U26DX01

Tests and checks to ignition coil

Checking ignition coil primary winding resistance

Check primary winding resistance using a digital multimeter.

Bring the probes of a multimeter into contact with the positive terminal strip (central strip) and negative terminal strips (outer strips) respectively.

The value of the two resistances should be between 0.450 Ω and 0.550 Ω at 22 - 25°C

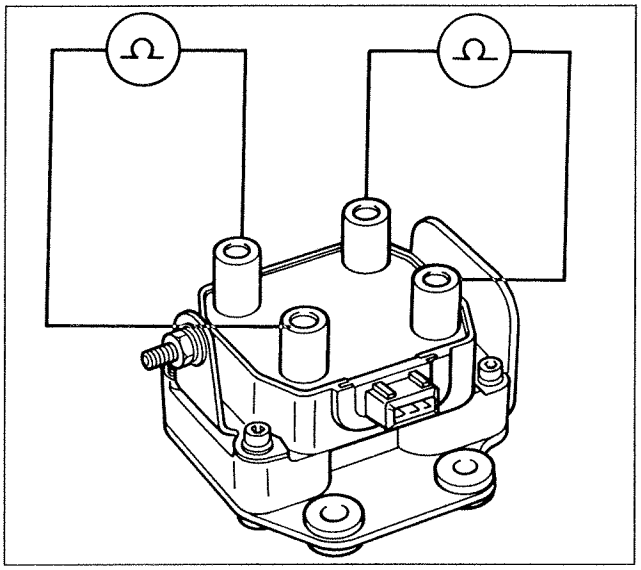

P3U26DX04 P3U26DX03

Checking resistance of ignition coil secondary winding

Check the secondary winding resistance usign a digital multimeter.

Bring the probes of a multimeter into contact with the two high tension output terminals 1-4 and 2-3.

The resistance reading must be between 12,000 Ω and 14,600 Ω at 22 - 25°C.

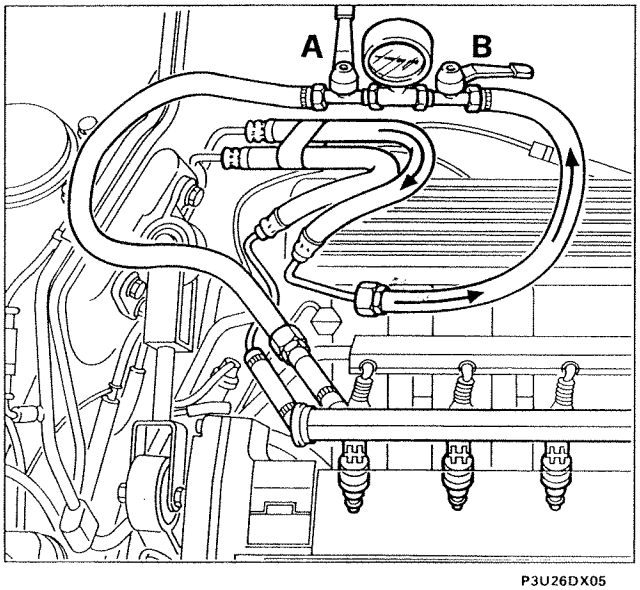

P3U26DX05

Checking fuel feed circuit

Test fuel feed circuit as described for the 1998 20v version, taking care to connect tool 1895890000 as shown in the figure.

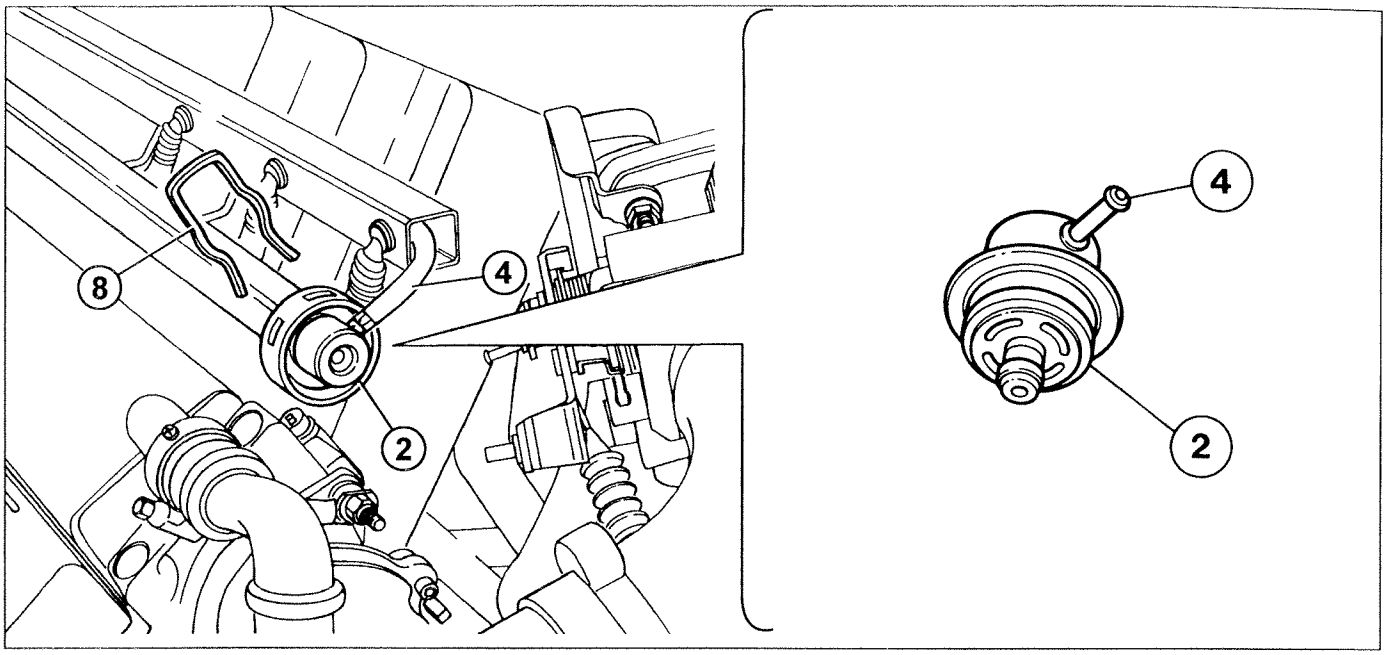

P3U27DX01 P3U27DX03

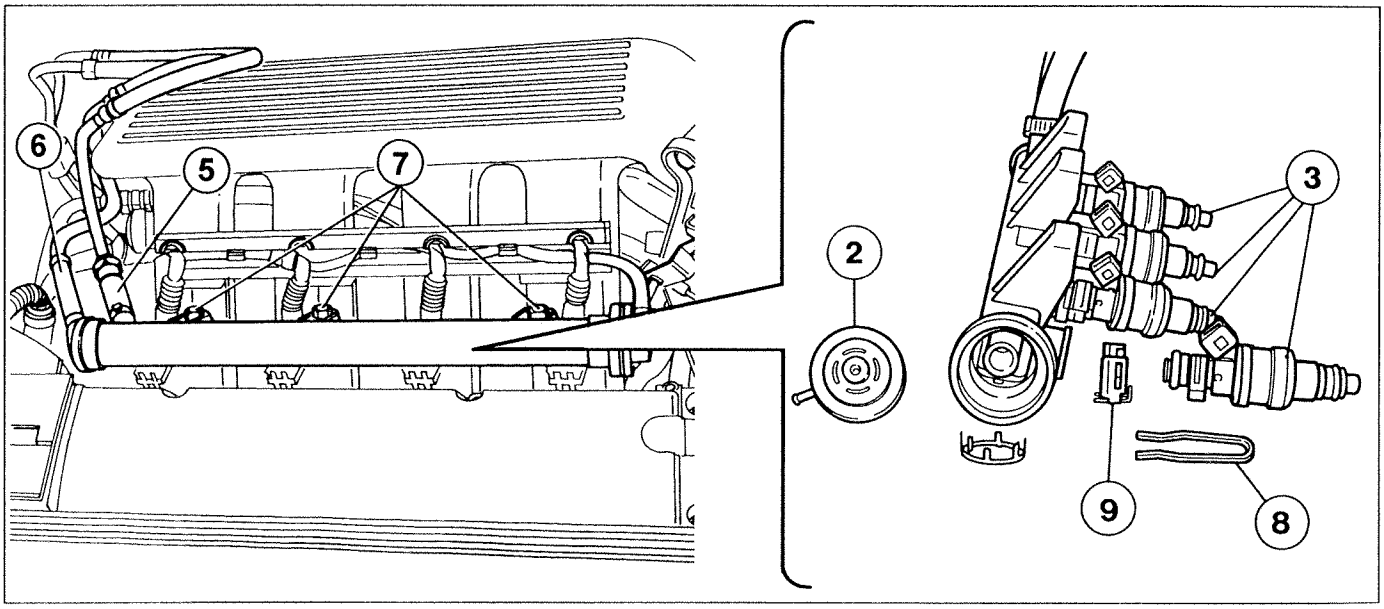

P3U27DX02 P3U27DX04

Removing-refitting fuel manifold together with injectors and Pressure regulator

- Disconnect fuel delivery and return lines (5 and 6) from fitting on fuel manifold.
- Disconnect electrical connectors from injectors and line (4) from regulator.
- Unscrew the three retaining screws (7).
- Remove injector manifold assembly.
- Remove clip (9) in order to remove the injectors from the manifold.
- Remove clip (8) in order to remove the pressure regulator (this can be done without removing the manifold).

1. Fuel manifold
2. Fuel pressure regulator
3. Injectors
4. Vacuum socket from engine inlet manifold
5. Fuel inlet pipe from pump
6. Fuel return lines to tank
7. Screws retaining fuel manifold to injectors
8. Clip retaining pressure regulator to fuel manifold
9. Clip retaining injector to fuel manifold

Copyright Fiat Auto

page

REPLACING AUXILIARY DRIVEBELT AND TIMING BELT

- Removing-refitting auxiliary drivebelt 1
- Removing-refitting timing belt 2

Copyright Fiat Auto

COPYRIGHT FIAT AUTO

The reproduction, even partial, of the text and illustrations is prohibited.

The information contained in this publication is purely indicative and could be out of date following modifications made by the Manufacturer, at any time, for technical or commercial reasons or in order to conform to legal requirements in the various countries.

Fiat Auto S.p.A.
D.M.C. - M.P.S.
Servizi Post Vendita - Assistenza Tecnica
10040 Volvera - To - (Italy) - Largo Senatore G.Agnelli, 5
Publication no. 506.475/18 - Novembre 1996 - 400
Printed in Italy - Tip. Giraudo - Torino
order no. 60444945

REMOVING-REFITTING AUXILIARY DRIVEBELT

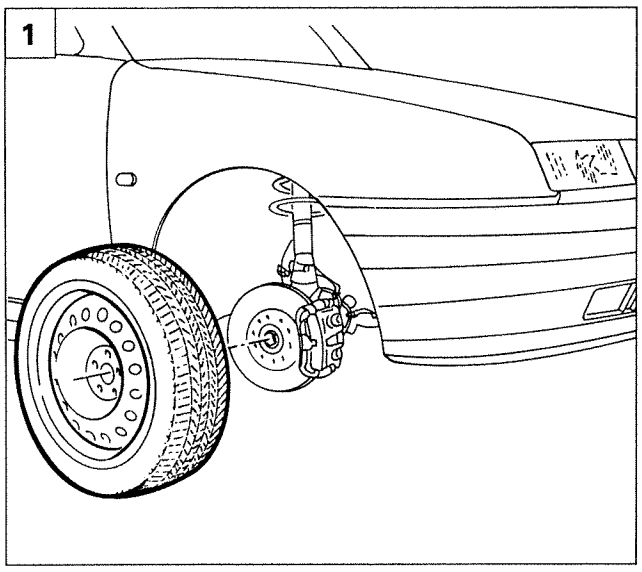

P3U09CJ01

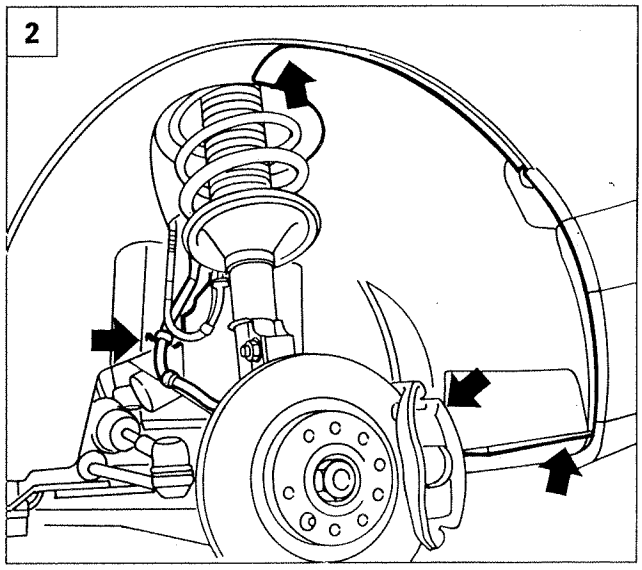

P3U01EJ01

1. Position the vehicle on axle stands and remove the right front wheel.
2. Remove the inner cover from the right wheel arch for access to the auxiliary drivebelt.

Check auxiliary drive belt tension and condition. Look in particular for: cracks, tears, surface wear (material is smooth and shiny), dry or hard parts liable to cause loss of grip. If one of the above defects is present, replace the auxiliary drive belt as described below:

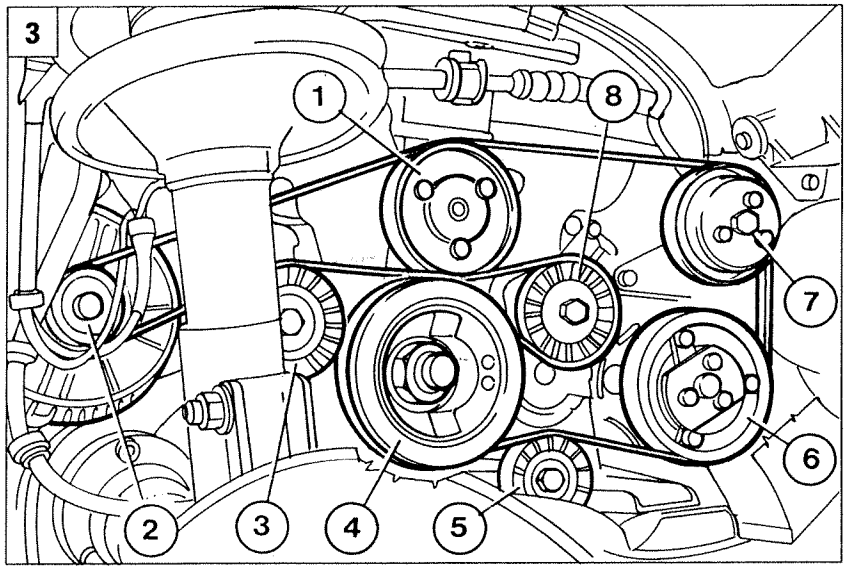

P3U01EJ03

3. View of auxiliary drivebelt fitted on the car:
   1. Coolant pump pulley
   2. Alternator
   3. Fixed guide pulley
   4. Auxiliary drive pulley on crankshaft (damping flywheel)
   5. Fixed guide pulley
   6. Air conditioner compressor pulley
   7. Power steering pump pulley
   8. Automatic tensioner

Prevent the belt coming into contact with oil or solvents which could affect the flexibility of the rubber and reduce grip.

Copyright Fiat Auto

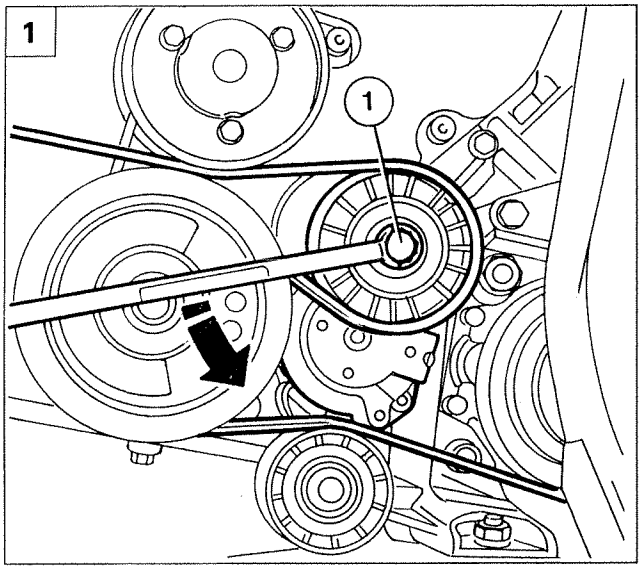

P3U02EJ01

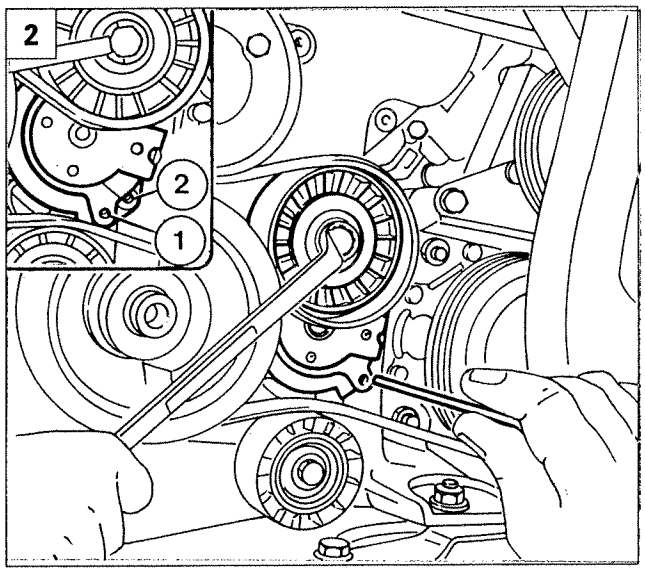

P3U02EJ02

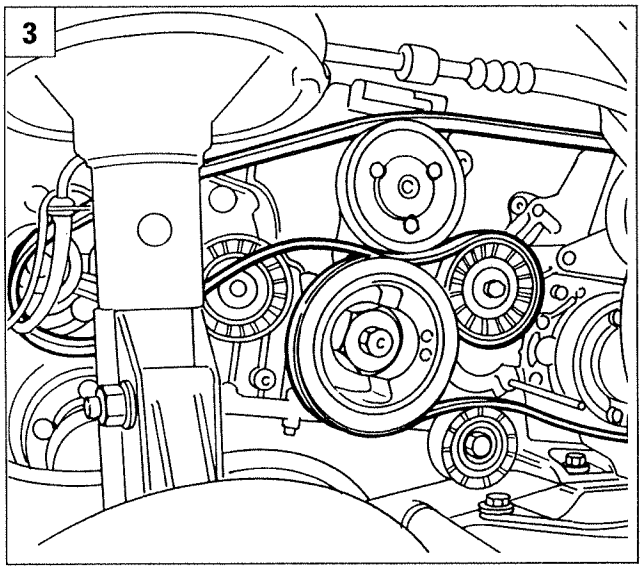

P3U02EJ03

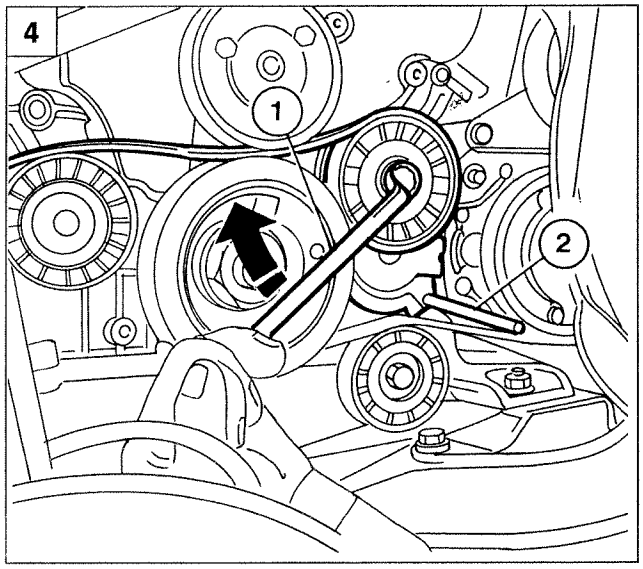

P3U02EJ04

1. Slacken belt tension by turning the automatic tensioner pulley retaining bolt (1).

2. Turn the tensioner until reference hole (1) on the tensioner is aligned with holes on the bracket. Then fit a pin measuring about 4 mm in diameter (obtain locally) in order to lock the tensioner in place.

3. Slip off the auxiliary drivebelt.

Refitting and tensioning auxiliary drivebelt.

4. Fit the belt, ensure that each point on the belt fits into its corresponding groove on the control pulley. Then move adjustment key (1) to withdraw pin (2) and release the tensioner by turning the adjustment key clockwise. The preloaded automatic tensioner spring will ensure the belt is correctly tensioned.

REMOVING-REFITTING TIMING BELT

The timing belt cannot be removed-refitted on the vehicle because because there is insufficient space between the timing belt cover and the body to carry out the operation. Replace the belt with the engine on a bench. Refer to the specific engine service manual for this engine version for the correct procedure.

page

HYDRAULIC OPERATION
- Clutch with hydraulic release mechanism 1

REMOVING-REFITTING
- Removing 3
- Lining - Pressure plate 3
- Refitting 3

CLUTCH OPERATION
- Clutch release bearing 4
- Fork control shaft 5
- Clutch release bearing sleeve 5
- Slave cylinder 6
- Clutch pump 7
- Clutch pedal 8

Copyright Fiat Auto

COPYRIGHT Fiat Auto S.p.A.

Reproduction of all or part of the text and illustrations is prohibited.

The information in this publication is intended as a guide and could be superseded by modifications introduced by the Manufacturer at any time for technical and commercial reasons or in accordance with local regulations.

Fiat Auto S.p.A.
Direzione Marketing Commerciale
Direzione Post-Vendita - Servizi - Assistenziali
10134 TURIN (Italy) - Corso E. Giambone, 33
Print no. 506.475 - Ottobre 1994 - 500
Printed in Italy - Tip. Europrint - Torino

CLUTCH WITH HYDRAULIC RELEASE MECHANISM

The hydraulic mechanism makes the clutch pedal easier to operate and facilitates release. This device consists of reservoir (1), pump (2) secured to pedal assembly and slave cylinder (3) secured to the gearbox bell housing by means of bracket (4).

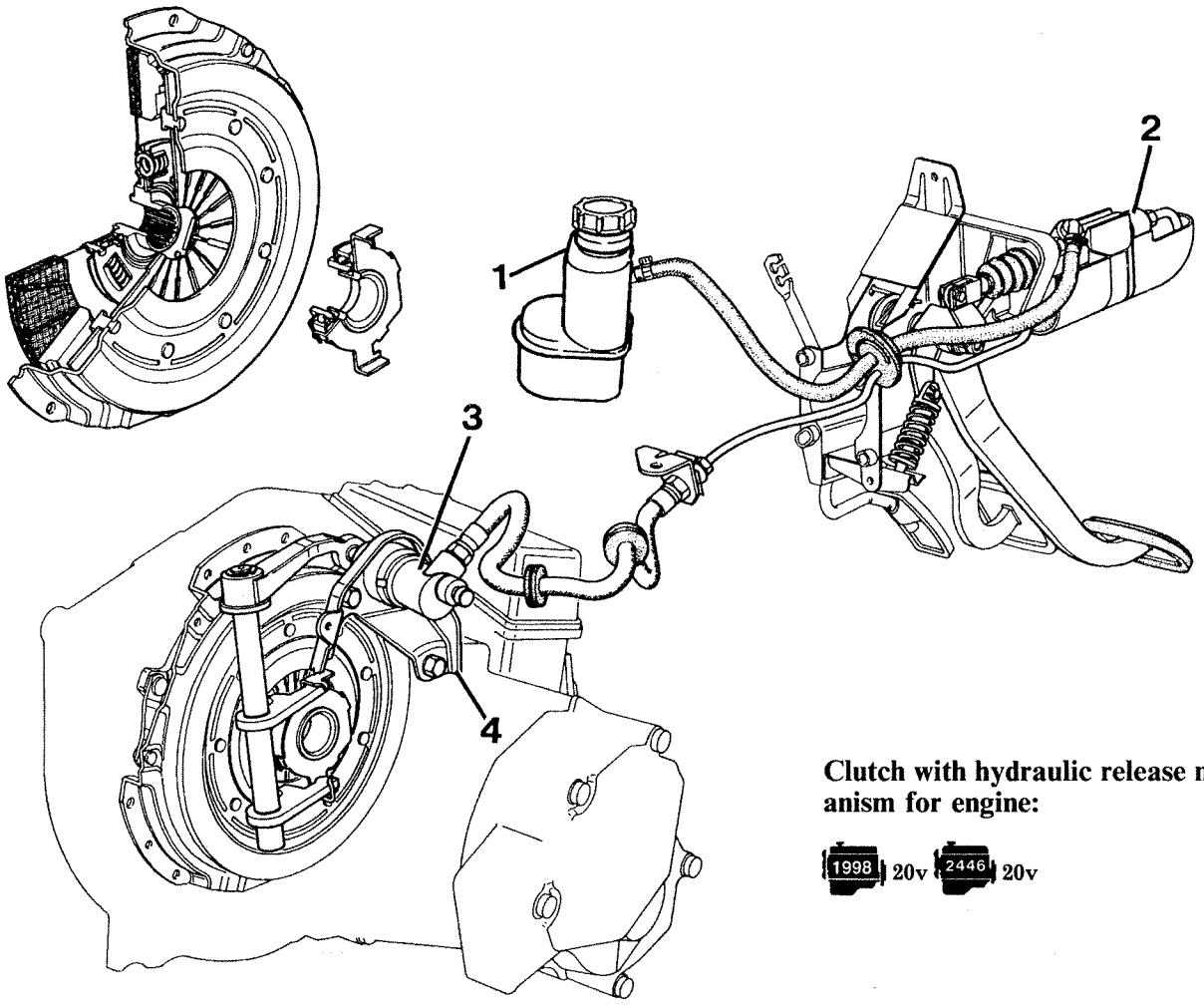

Clutch with hydraulic release mechanism for engine:

1998 20v 2446 20v

P3U001C01

1. Reservoir
2. Clutch pump
3. Slave cylinder
4. Fastening bracket

Adoption of a hydraulic clutch permits more effective and reliable operation than with a mechanical unit. Release is also smoother and free of jerks, particularly when high torques are transmitted.

The vehicle is more comfortable to drive because vibrations transmitted by the power unit are reduced by the damping effect of the oil.

The hydraulic release mechanism also allows constant adjustment of clutch pedal height.

Copyright Fiat Auto

18.

A clutch assembly with pull-type release mechanism is used on vehicles with 1995 16v turbo, 2959 24v and 2387 TD units. The mechanism owes its name to the fact that when the pedal is pressed, the clutch spring is pulled by the hook-on clutch release bearing instead of pushed as on a conventional unit.

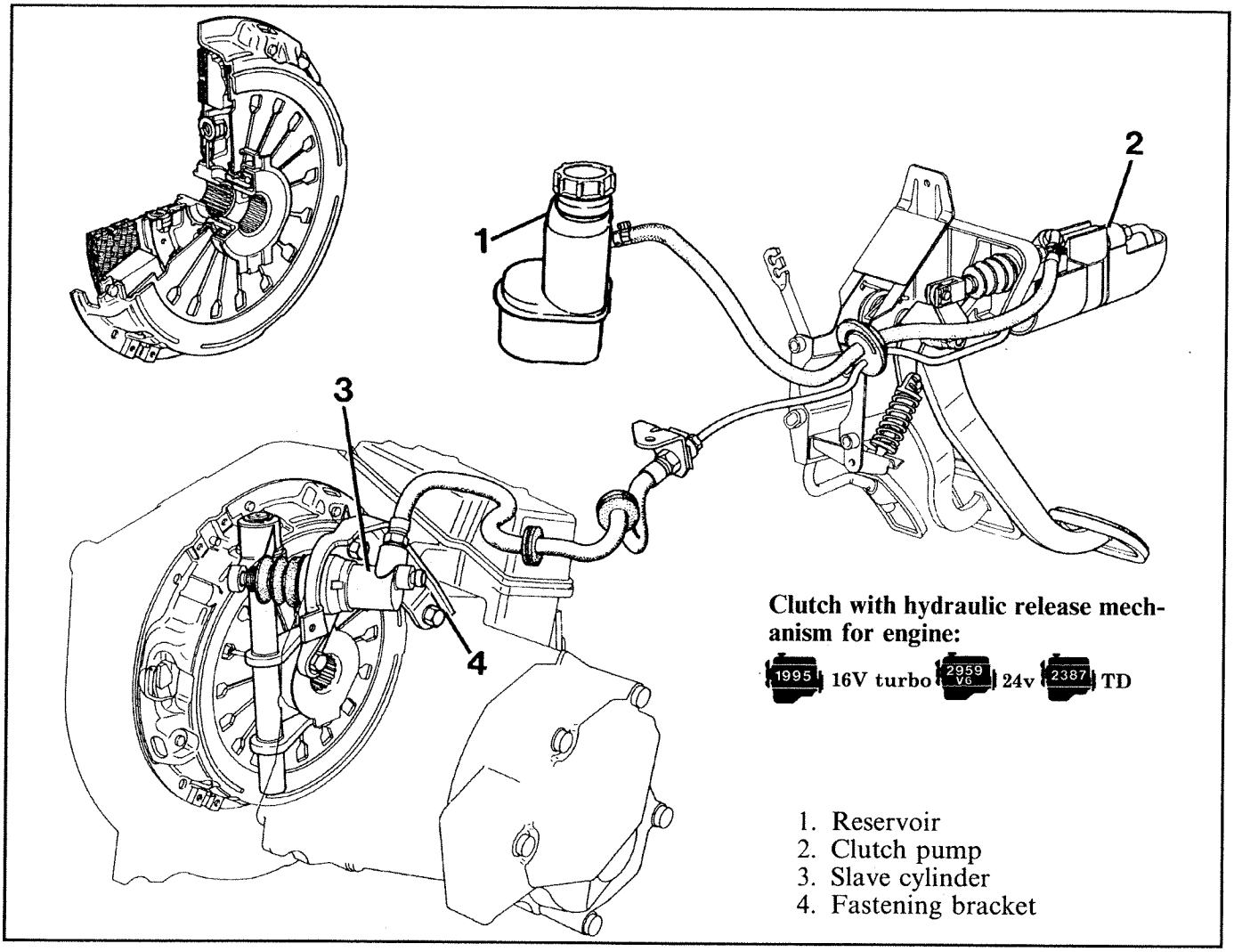

Clutch with hydraulic release mechanism for engine:

1995 16V turbo 2959 V6 24v 2387 TD

1. Reservoir
2. Clutch pump
3. Slave cylinder
4. Fastening bracket

P3U002C01

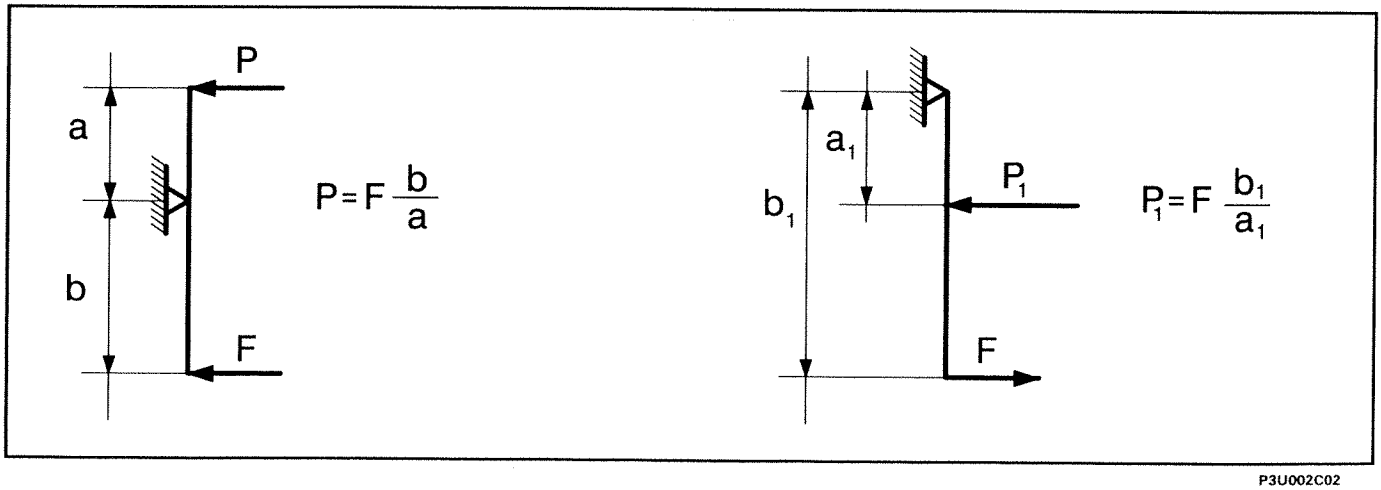

P3U002C02

This allows an increase in force P_1 exercised on the pressure plate, which in turn increases the amount of torque that can be transmitted - without altering the size of the clutch assembly and applying the same force F to the clutch pedal during release.

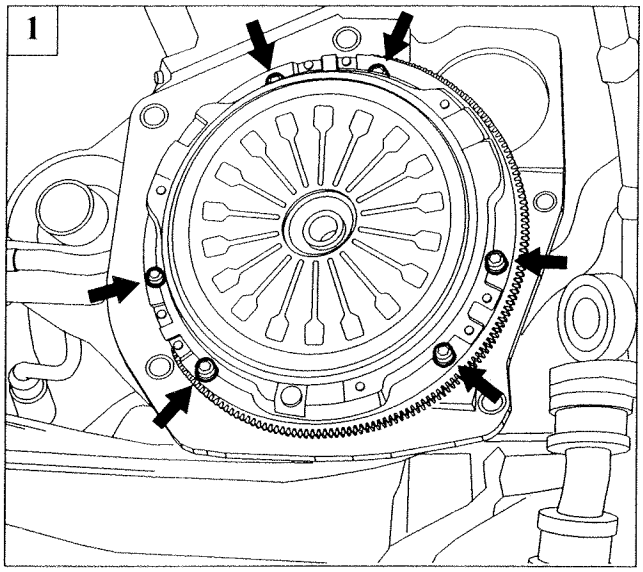

P3U13CB01

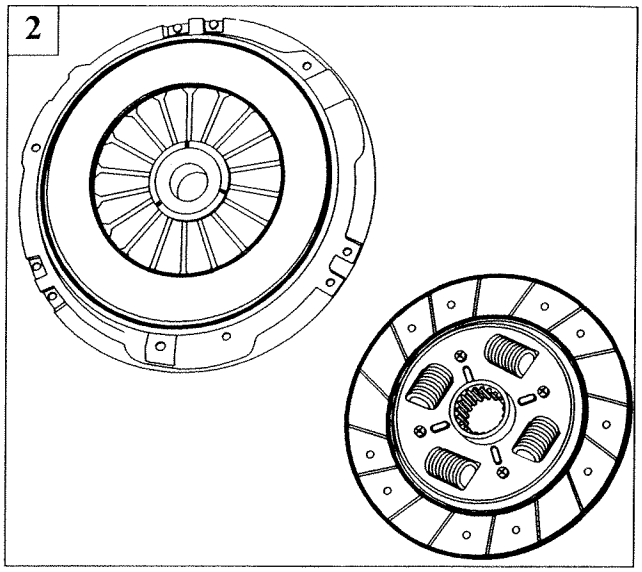

P3U003C01

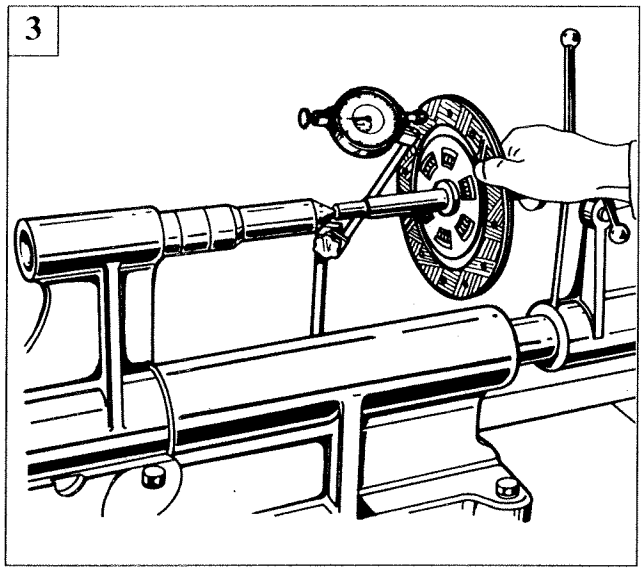

P3U003C02

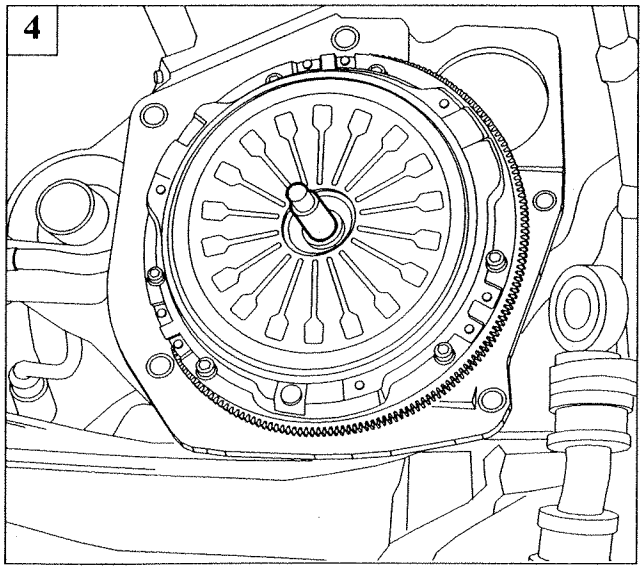

P3U13CB03

REMOVING

NOTE *In order to remove the clutch, remove the gearbox-differential unit as described in Section 21-27.*

1. Unscrew the bolts fastening the clutch assembly to the flywheel and remove the assembly.

LINING - PRESSURE PLATE

2. Check the lining and pressure plate; replace if excessive wear, hot spots or deep scoring are noted;

3. check that lining is not more than 0.25 mm off-centre.

REFITTING

For 1995 16 v turbo, 2959 24v e 2387 TD versions, this operation is carried out after removing the clutch release bearing as described on the following page.

4. Align the lining to fit the clutch assembly using the centring pin:

1875029000	1998 20v - 2446 20v
1870081000	1995 16v Turbo, 2959 24v, 2387 TD

Copyright Fiat Auto

18.

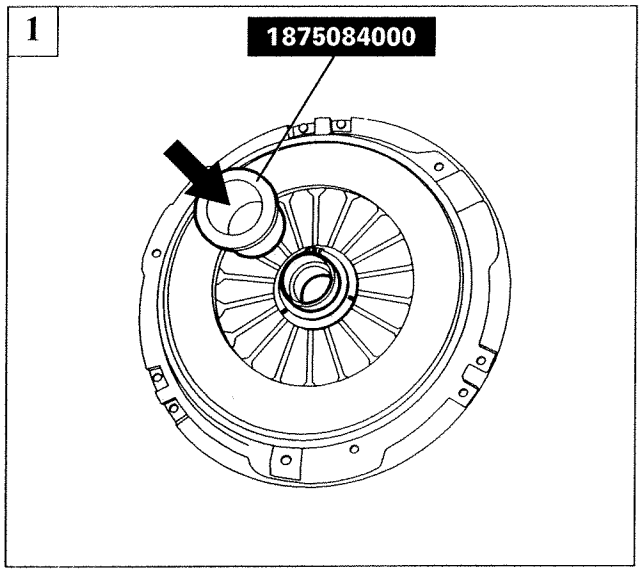

P3U13CB02

CLUTCH RELEASE BEARING

Removing

1. Use tool 1875084000 to remove the clutch release bearing from the clutch spring (only on 1995 16v turbo, 2959 24v and 2387 TD versions).

Replace the bearing if it shows signs of binding or turns noisily.

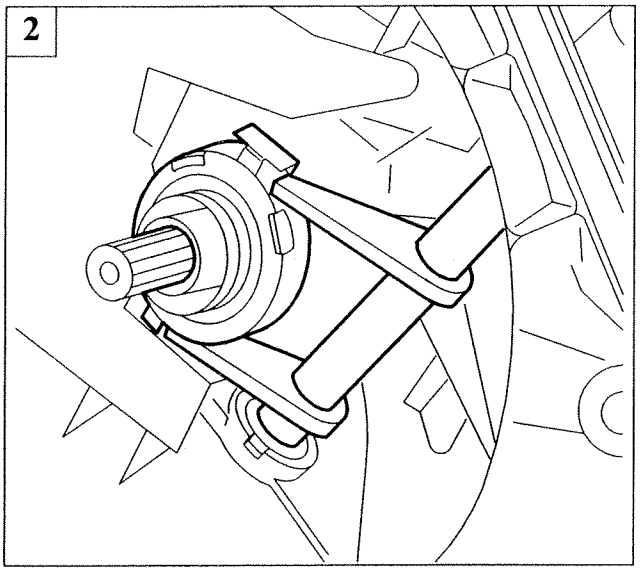

P3U14CB01

Refitting

2. Position the clutch release bearing on the gearbox main shaft;
3. to refit the gearbox-differential unit to the engine, secure the clutch release fork as shown in the figure;
4. after refitting the gearbox-differential unit, move the fork in the direction indicated by the arrow so that the clutch release bearing can be positioned in its seat (only on 1995 16V turbo, 2959 24v and 2387 TD versions).

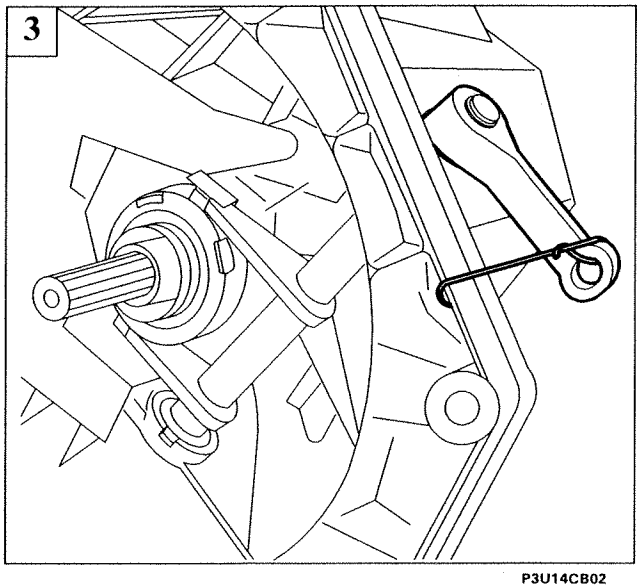

P3U14CB02

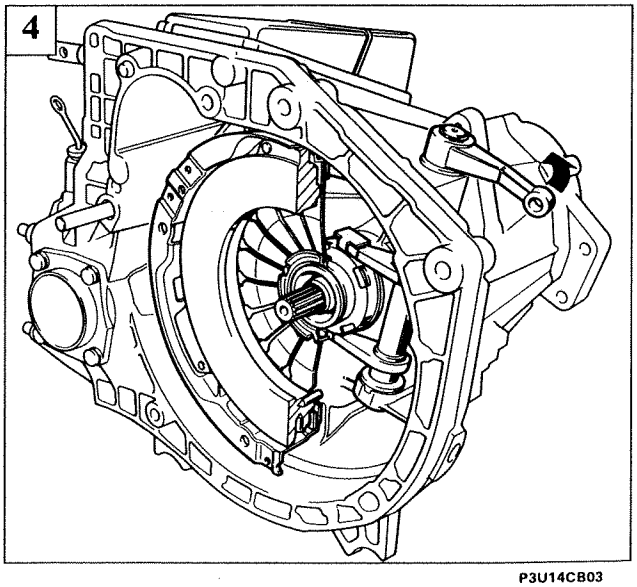

P3U14CB03

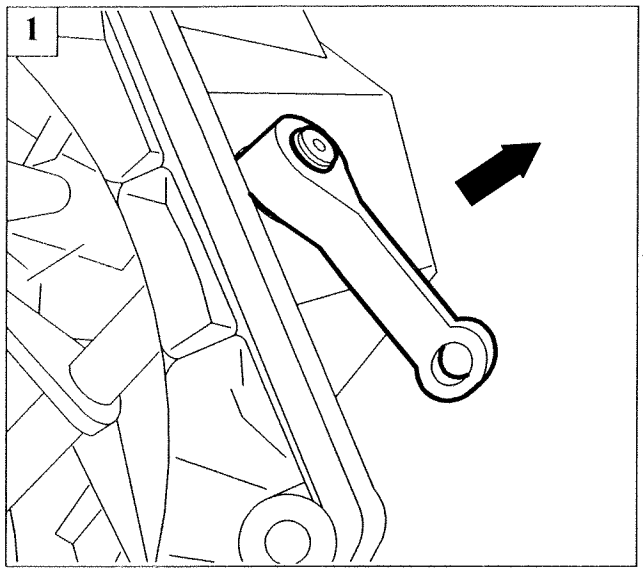

P3U005C01

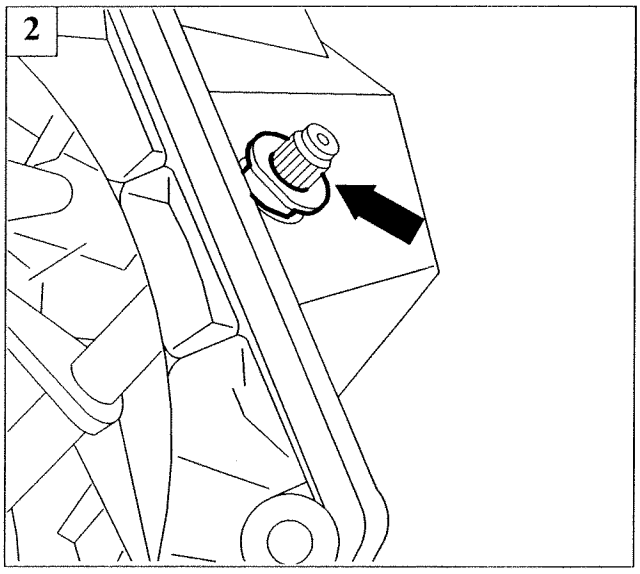

P3U005C02

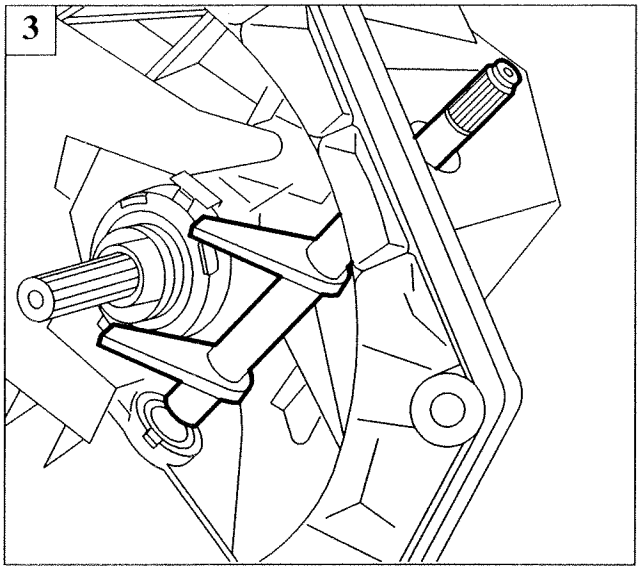

P3U005C03

FORK CONTROL SHAFT

Removing-refitting

1. Remove the retaining ring and withdraw the release control lever;
2. remove the upper bush;

Replace the upper bush whenever fork control shaft displays excessive clearance.

3. remove the fork control shaft by withdrawing from lower bush.

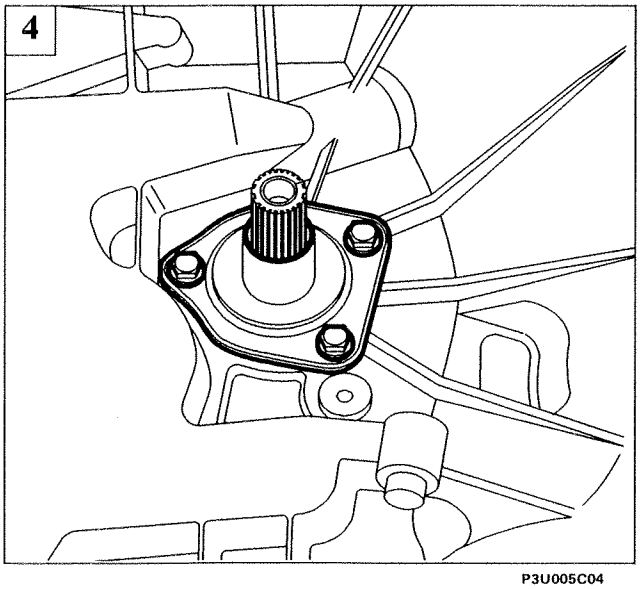

P3U005C04

CLUTCH RELEASE BEARING SLEEVE

Removing-refitting

4. Unscrew the bolts indicated and withdraw sleeve.

Replace the sleeve whenever oil leaks are noted from the gearbox.

NOTE *When refitting, spread silicone sealant on the mating surfaces to act as a seal.*

Copyright Fiat Auto

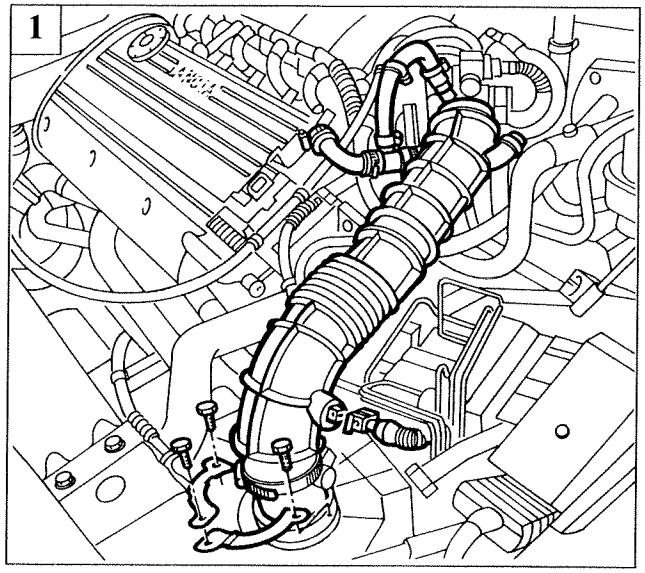

P3U02AB01

SLAVE CYLINDER

Removing-refitting

1. Disconnect the air temperature sensor, unscrew the clips on the air cleaner and butterfly valve case and then remove the intake sleeve;

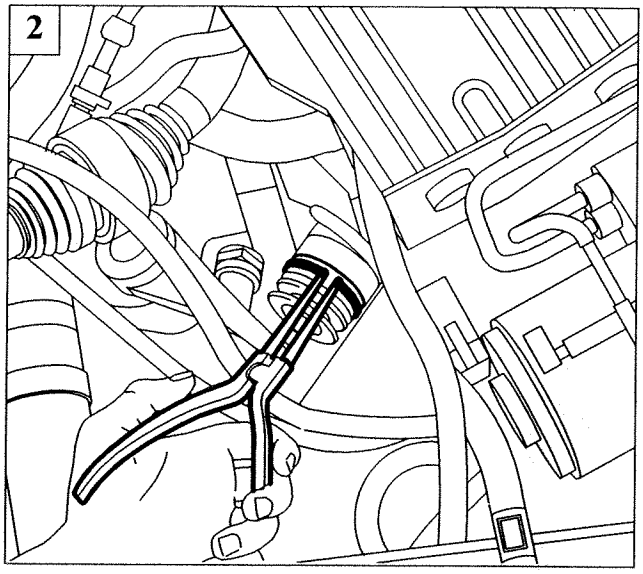

P3U006C01

2. remove the retaining ring on the slave cylinder, then release from its seat and move upward in order to facilitate the subsequent removal operation;

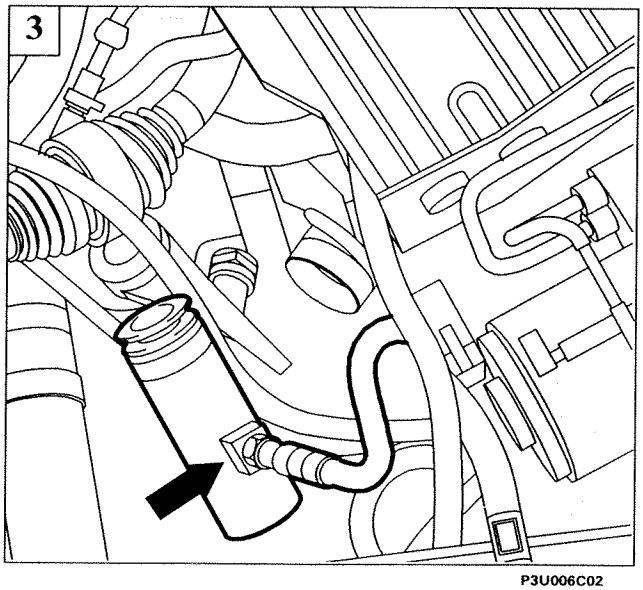

P3U006C02

3. disconnect the fitting and remove the slave cylinder.

Once the slave cylinder has been replaced, top up fluid and bleed by means of bleed screw on slave cylinder.

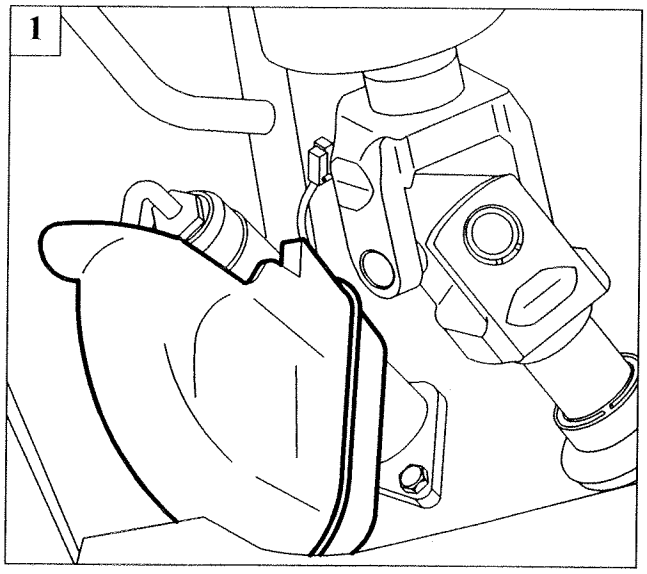

P3U007C01

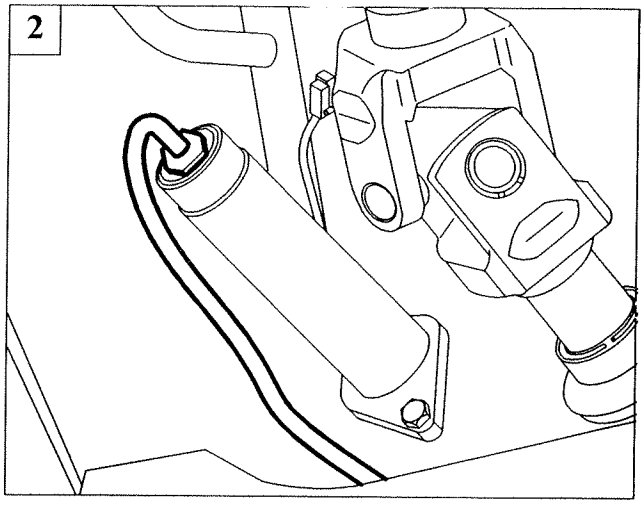

P3U007C02

CLUTCH PUMP

Removing-refitting

Working from inside the vehicle, remove the under-facia cover as indicated in Section 70, then:

1. cut the clip and remove the plastic guard;
2. unscrew the pump outlet fitting, taking care not to let fluid emerge;
3. remove the clip and withdraw the line carrying fluid into the pump;
4. remove the retaining ring and withdraw the pin connecting clutch pump to pedal;
5. unscrew retaining nuts and remove clutch pump.

When refitting the clutch pump, top up fluid and bleed by means of bleed screw on slave cylinder.

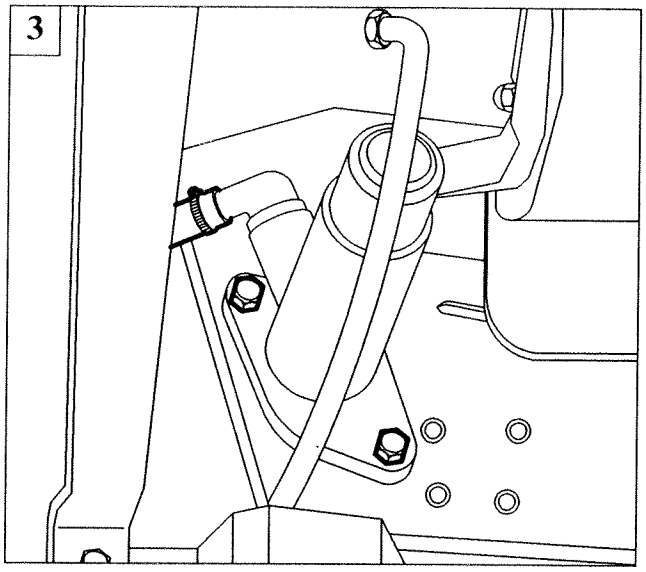

P3U007C03

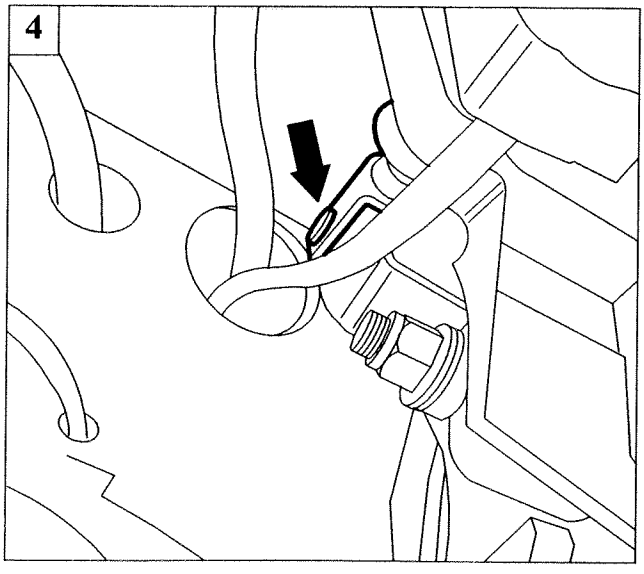

P3U007C04

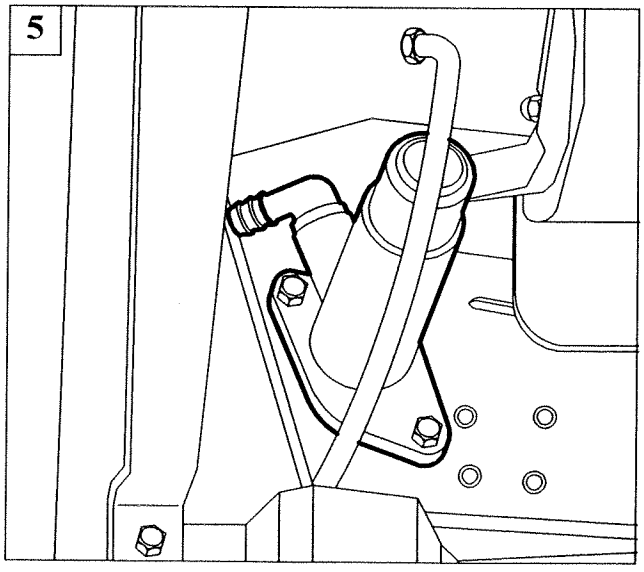

P3U007C05

Copyright Fiat Auto

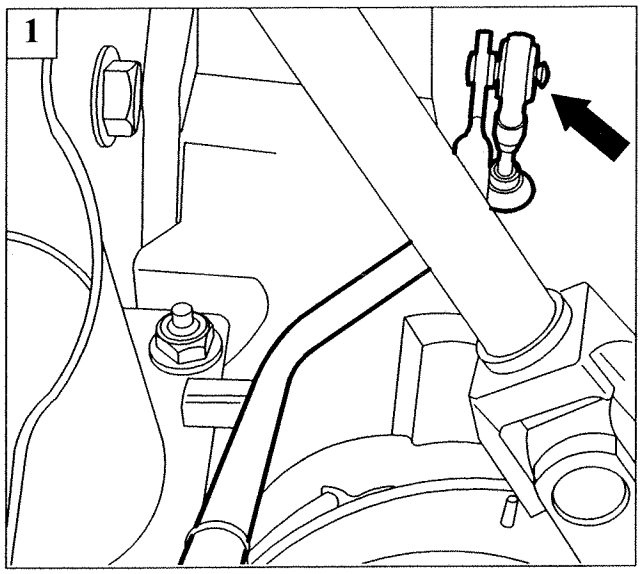

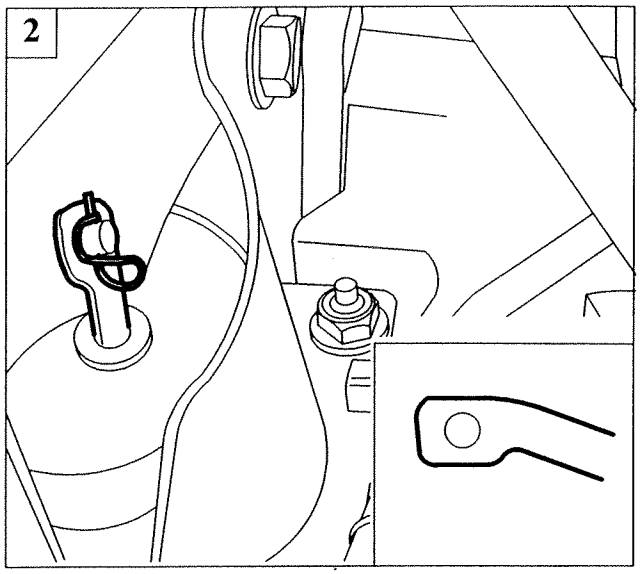

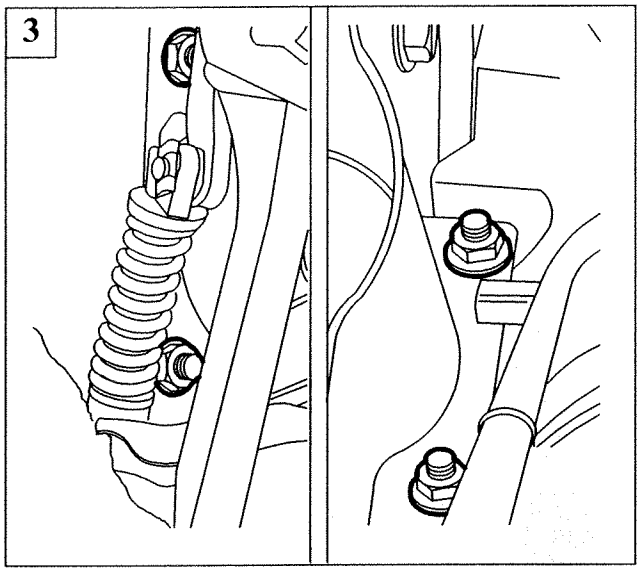

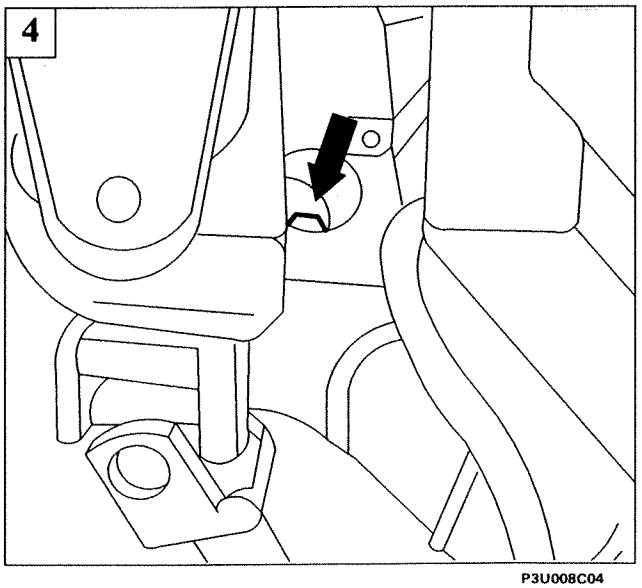

CLUTCH PEDAL

Removing-refitting

After removing the clutch pump as indicated on the previous page, remove the pedal assembly as follows:

1. undo the accelerator cable, which is press--fitted to the accelerator pedal;
2. remove the clip on the pin connecting the brake servo rod to the brake pedal;

When refitting the brake servo rod, the protruding part must face downward.

3. unscrew nuts retaining pedal unit to brake servo, then take out brake servo assembly working from engine bay;

4. unscrew top pedal unit retaining bolt, then remove the pedal unit by turning as appropriate.

NOTE *When refitting, replace the hex-headed screw with a hex-headed socket screw to aid centring.*

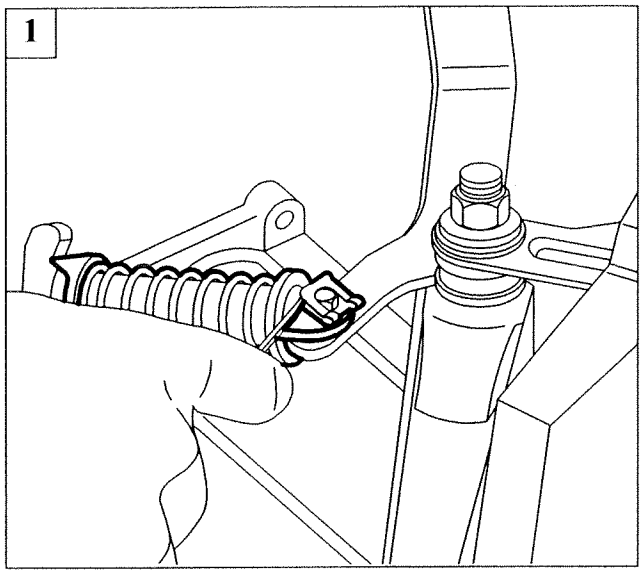

Dismantling-fitting

1. Withdraw the clip, then take out the pin and remove the clutch pedal return spring;

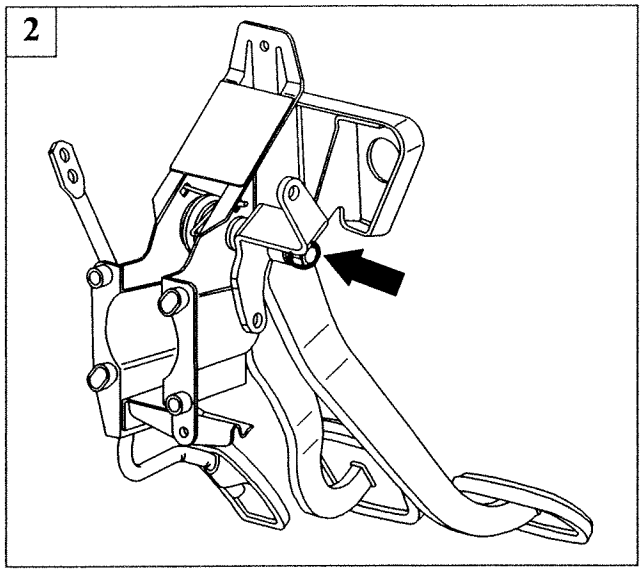

2. unscrew the bolt that acts as a pin for brake and clutch pedals;
3. withdraw the pin unntil the clutch pedal is released;
4. withdraw the bush from the clutch pedal.

When refitting, lubricate bush inner and outer surfaces with grease.

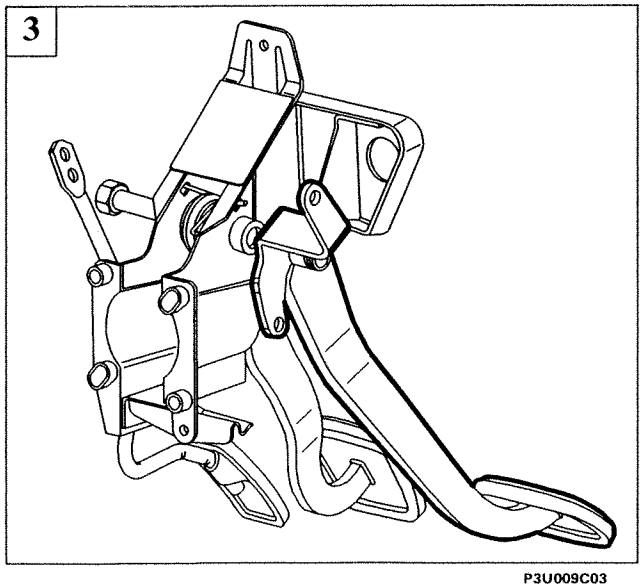

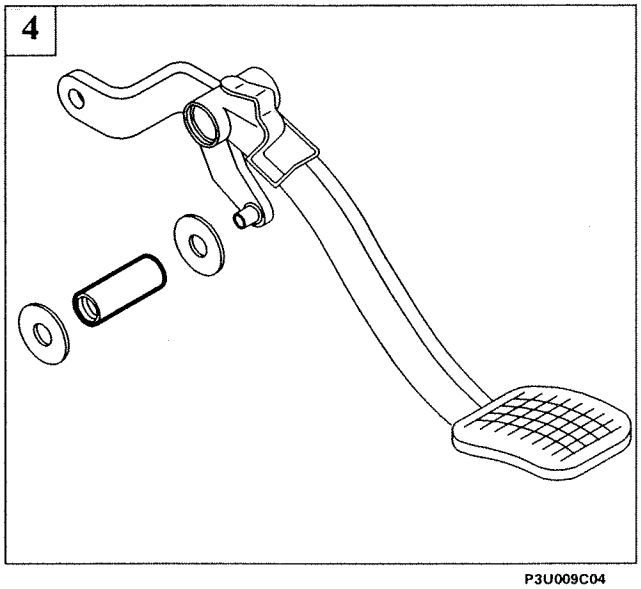

Copyright Fiat Auto

Gearbox and differential

Contents

21-27.

page

GEARBOX AND DIFFERENTIAL

- Removing-refitting 1

DRIVE SHAFTS

- Removing-refitting 14
- Dismantling 15
- Refitting 17

INTERMEDIATE SHAFT

- Removing-refitting 18

REVERSE WITH SYNCHROMESH

- Manual gearbox with synchromesh on reverse 19

EXTERNAL GEAR LINKAGE

- Removing-refitting 20
- Dismantling-reassembly 22

Copyright Fiat Auto

COPYRIGHT Fiat Auto S.p.A.

Reproduction of all or part of the text and illustrations is prohibited.

The information in this publication is intended as a guide and could be superseded by modifications introduced by the Manufacturer at any time for technical and commercial reasons or in accordance with local regulations.

Fiat Auto S.p.A.
Direzione Marketing Commerciale
Direzione Post-Vendita - Servizi - Assistenziali
10134 TURIN (Italy) - Corso E. Giambone, 33
Print no. 506.475 - Ottobre 1994 - 500
Printed in Italy - Tip. Europrint - Torino

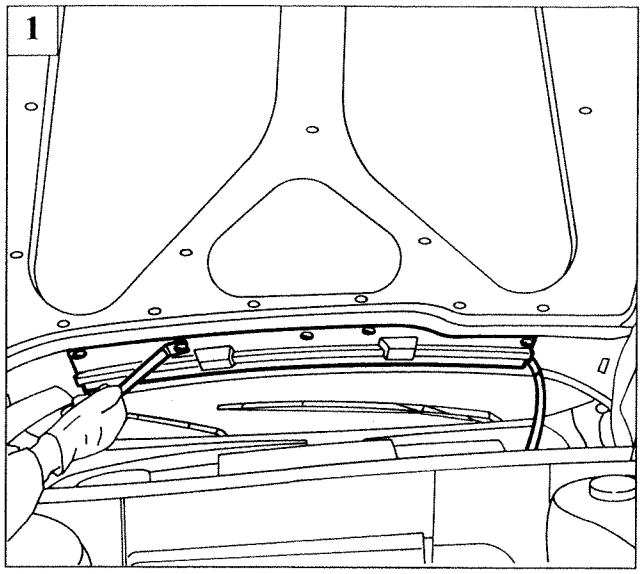

P3U01CB01

REMOVING-REFITTING

Removing

Place the car on ramps, disconnect the battery's negative lead and remove the front wheels.

NOTE *The procedures described in points 1 and 2 are not compulsory in order to remove and refit the gearbox and differential unit; however, they can facilitate some stages.*

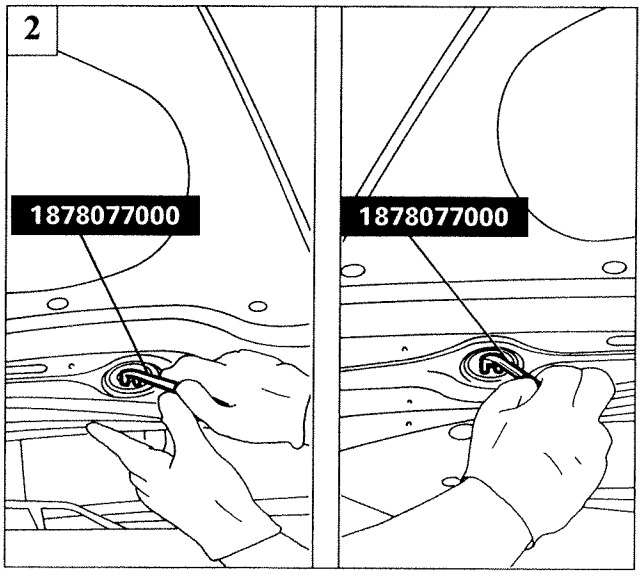

P3U01CB02

Proceed as described below:
1. remove the buttons shown in the figure using the tool 1878077000;
2. remove the pipes from the windscreen washer jets and remove the bonnet;
3. disconnect the positive cable, undo the locking bolt and remove the battery;
4. undo the attachment bolts and remove the battery cage;

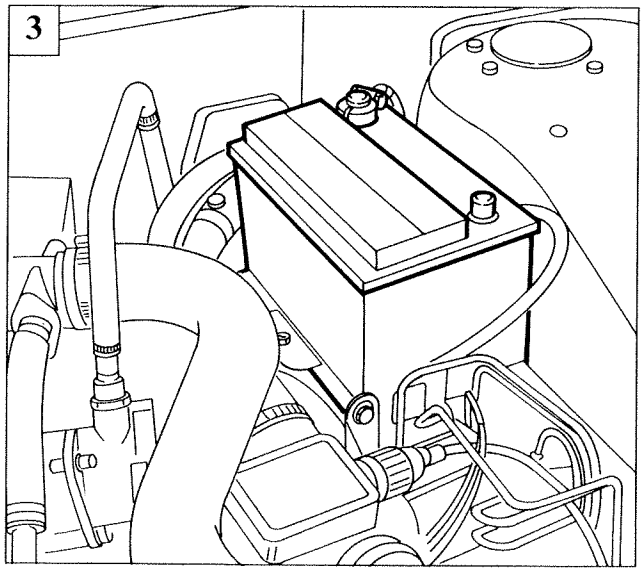

P3U01CB03

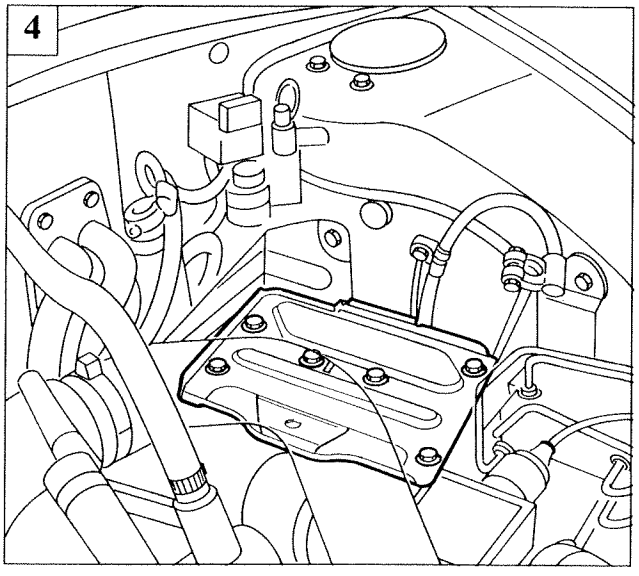

P3U01CB04

Copyright Fiat Auto

21-27.

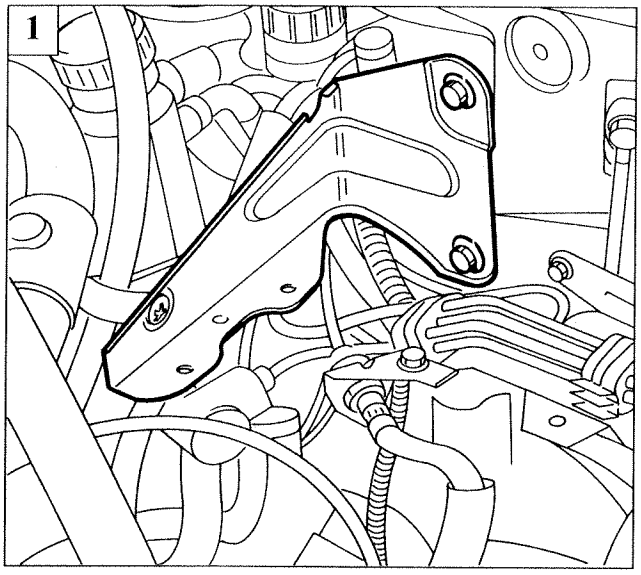

P3U02CB01

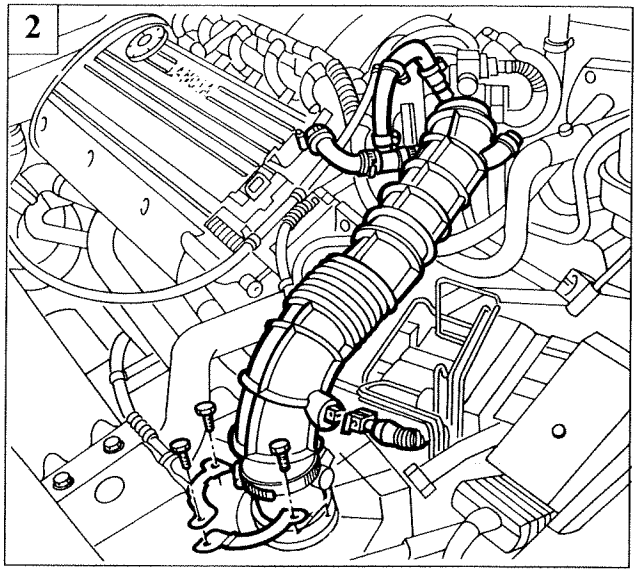

P3U02AB01

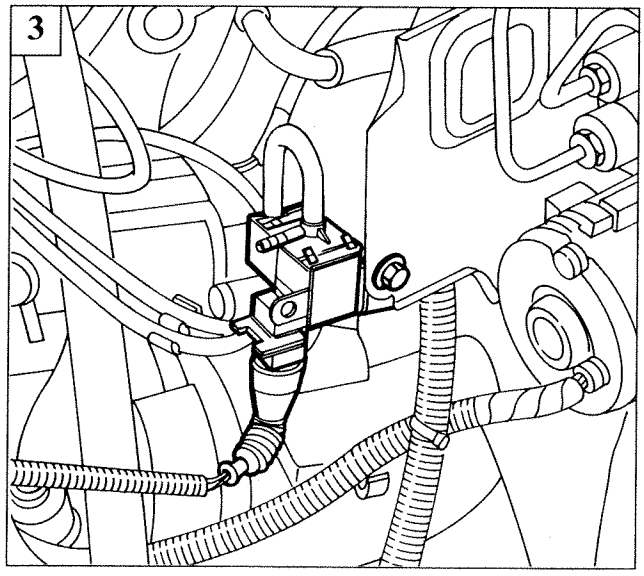

P3U02AB02

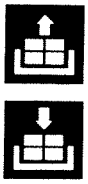

1. undo the bolts and remove the rear bracket supporting the battery cage;
2. disconnect the wiring connections from the flow meter and intake air temperature sensor, undo the clips (highlighted) on the rear of the air intake pipe from the air cleaner to the throttle body and the attachments of the pipe to the air cleaner, and disconnect the pipe;
3. disconnect the wiring connection, then undo the bolt securing the solenoid to the ABS control unit mounting, and push aside the solenoid on the engine;
4. undo the two nuts securing the ABS mounting bracket to the battery cage mounting bracket;
5. disconnect the connector and the earth cable (highlighted) from the ABS control unit;

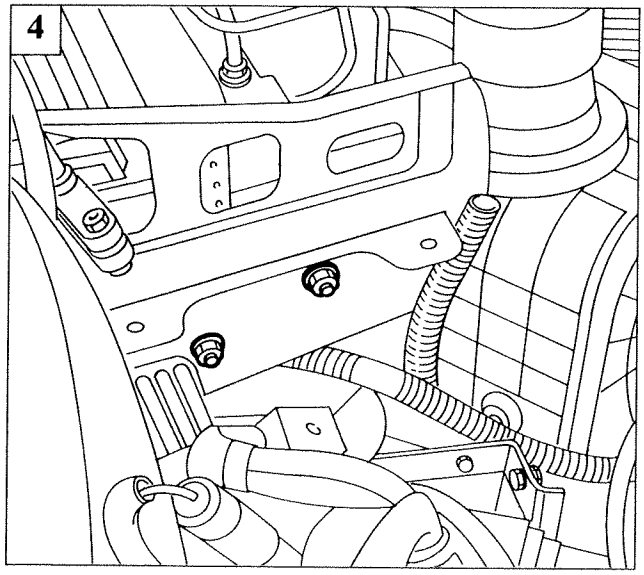

P3U02AB03

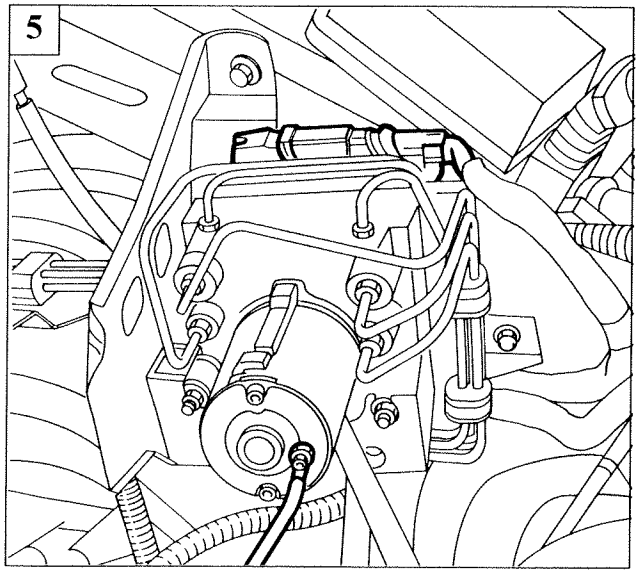

P3U02AB04

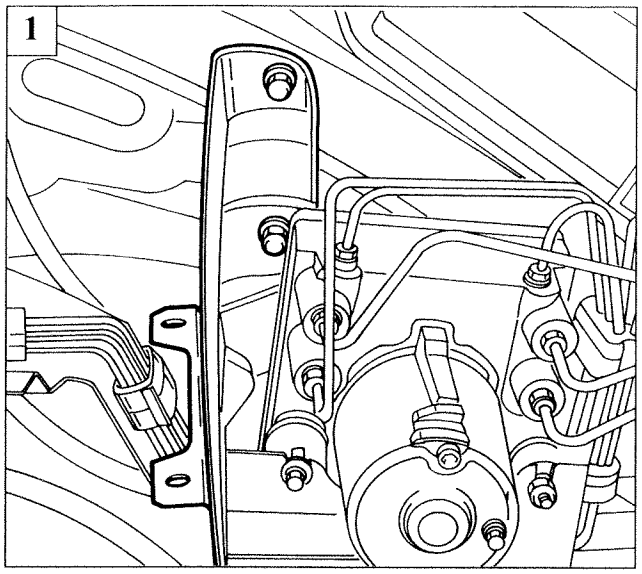

P3U03AB01

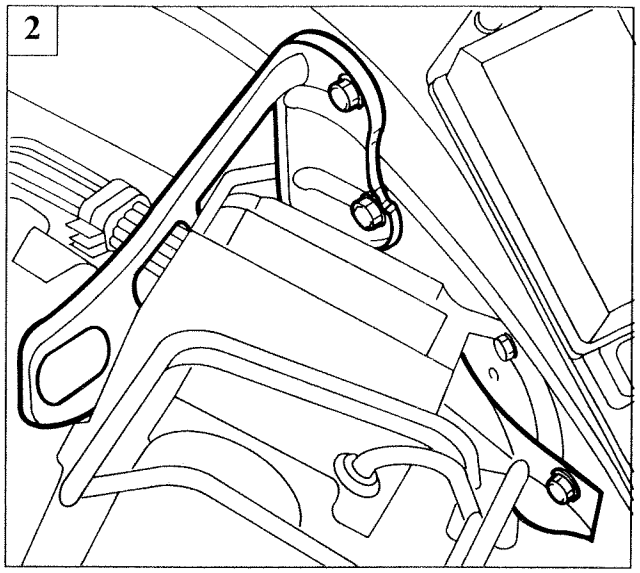

P3U08CB03

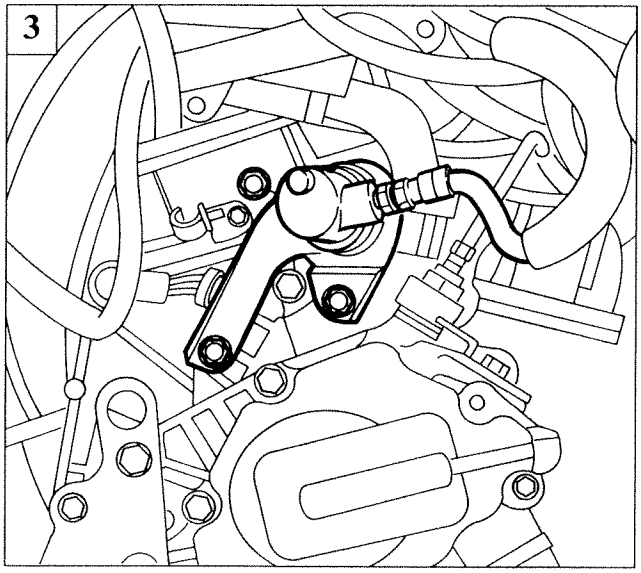

P3U07CB04

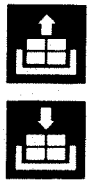

1. remove the battery cage front bracket, after undoing the bolts which secure it to the body shell;
2. undo the attachments securing the ABS control unit mounting bracket to the body shell;
3. remove the clutch cylinder complete with gearbox mounting bracket;
4. undo the bolt securing the brake fluid pipe bracket;
5. push aside the ABS electrohydraulic unit and secure it outside the working area, taking care not to damage the pipes;

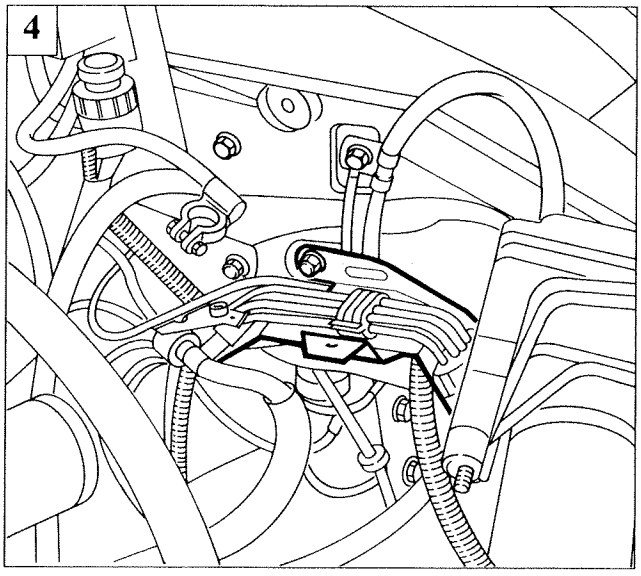

P3U08CB04

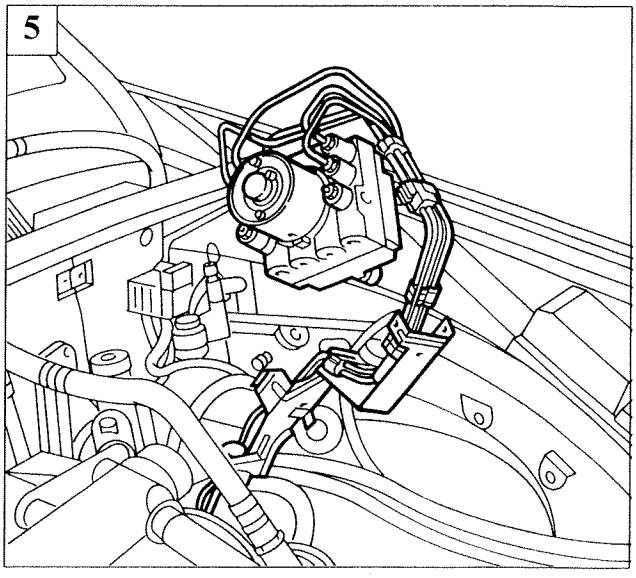

P3U08CB05

Copyright Fiat Auto

21-27.

1

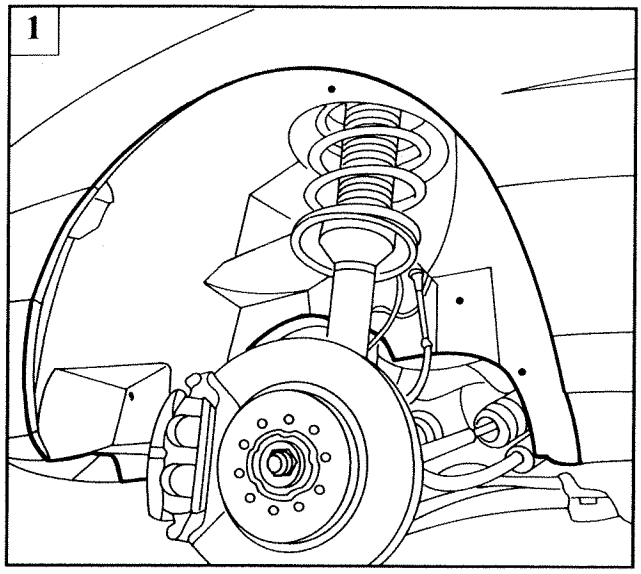

P3U03CB04

2

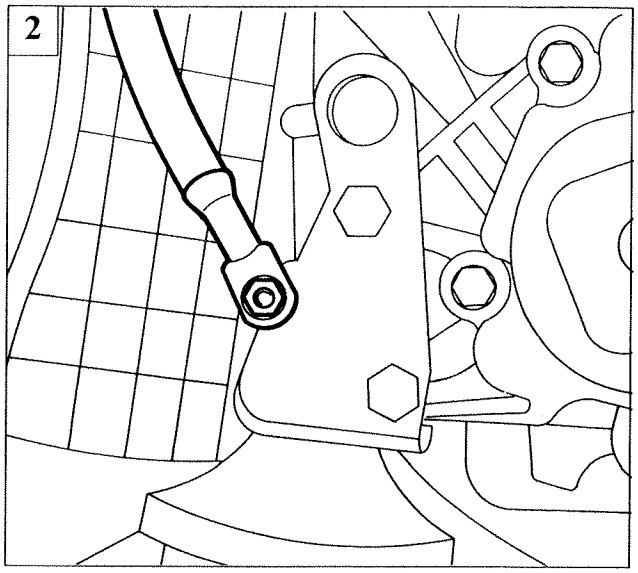

P3U03CB05

3

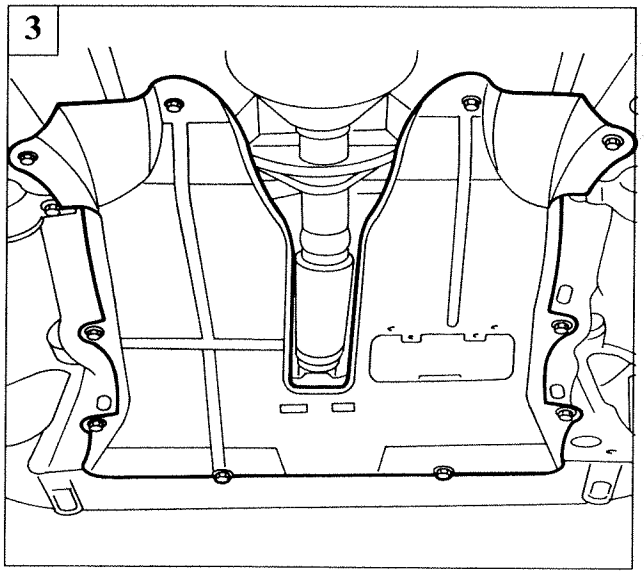

P3U03CB01

1. remove the left wheelarch (two parts) by undoing the attachment components;
2. disconnect the earth cable from the gearbox mounting;
3. disconnect the engine compartment bottom guard;
4. disconnect the first section of the exhaust pipe, by undoing the parts shown in the figure;

4

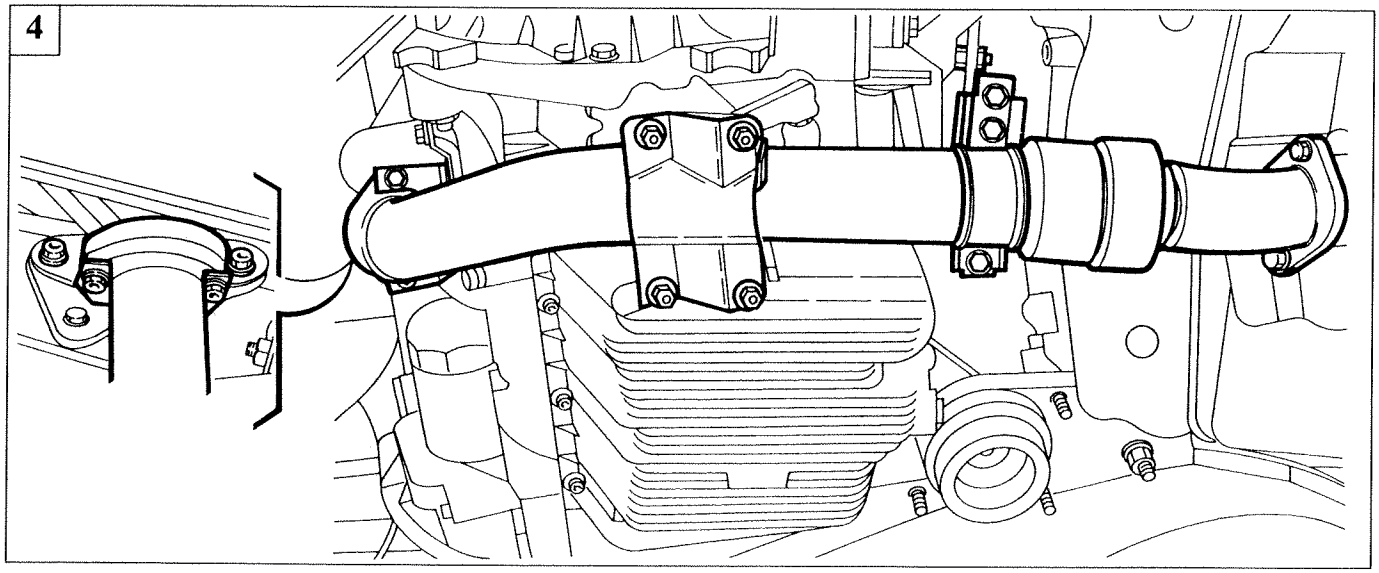

P3U04AB01

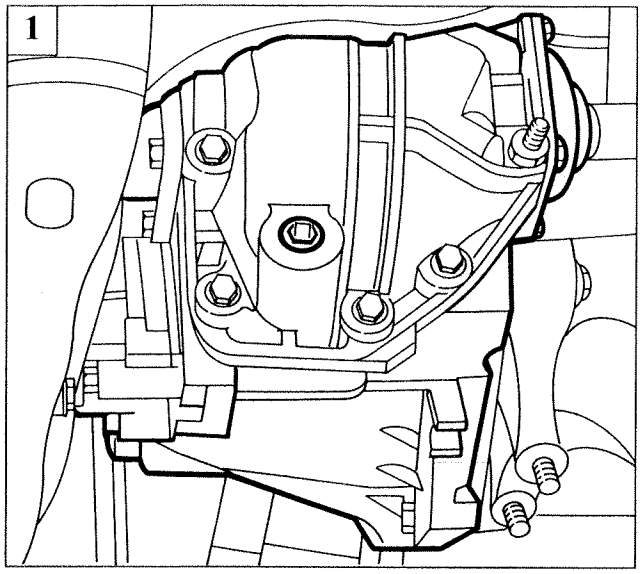

P3U04CB01

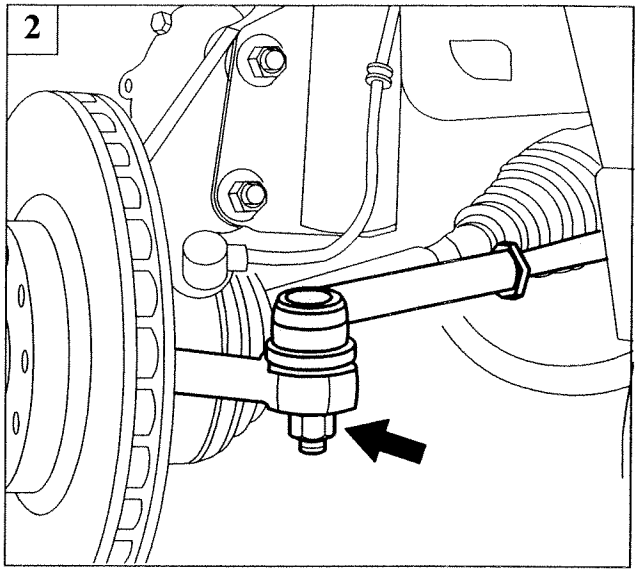

P3U04CB02

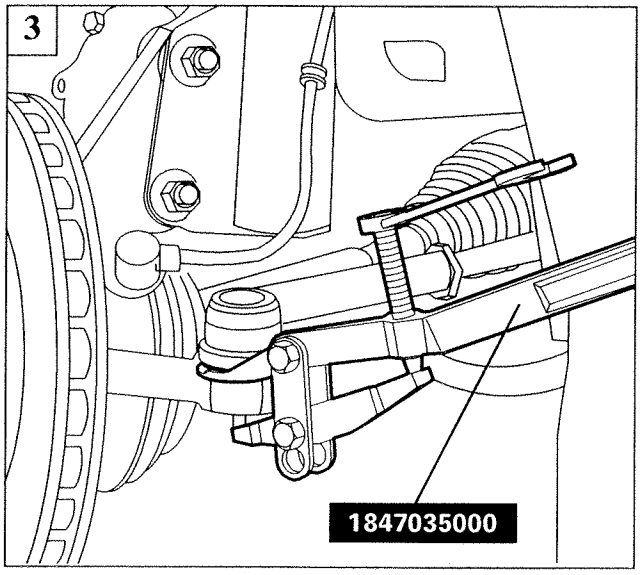

P3U04CB03

1. drain the oil from the gearbox-differential unit;
2. undo the nut securing the track rod end pin to the vertical link;
3. use tool 1847035000 to prise off the track rod end pin from the vertical link;
4. remove the wheel speed sensor from the vertical link;
5. undo the nut securing the connecting link to the wishbone;

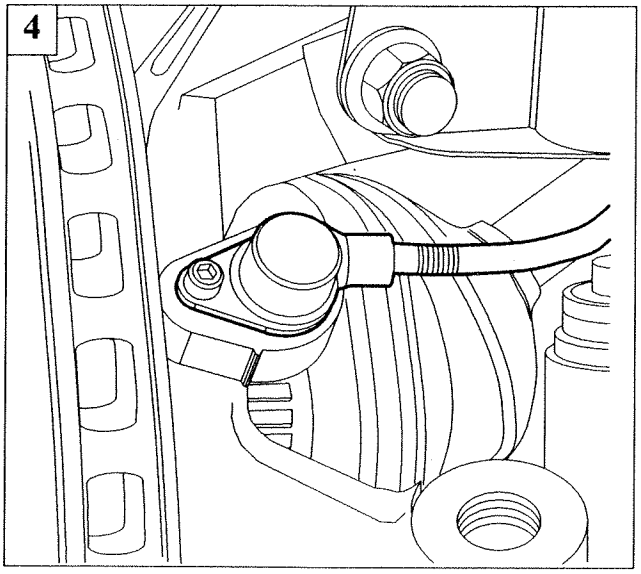

P3U04CB04

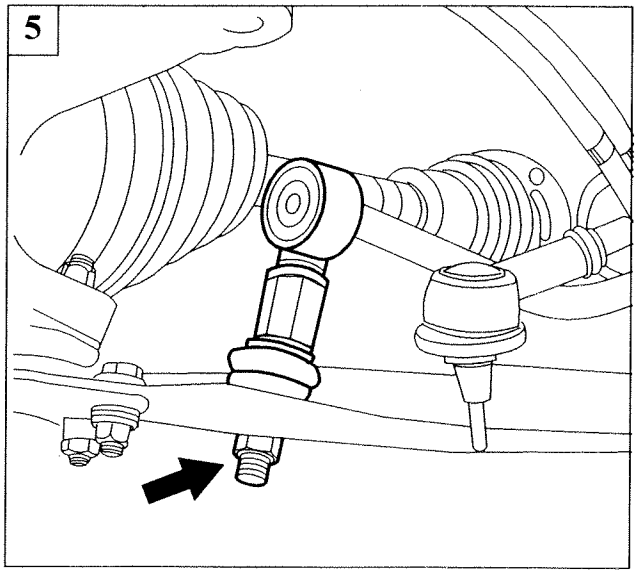

P3U04CB05

Copyright Fiat Auto

21-27.

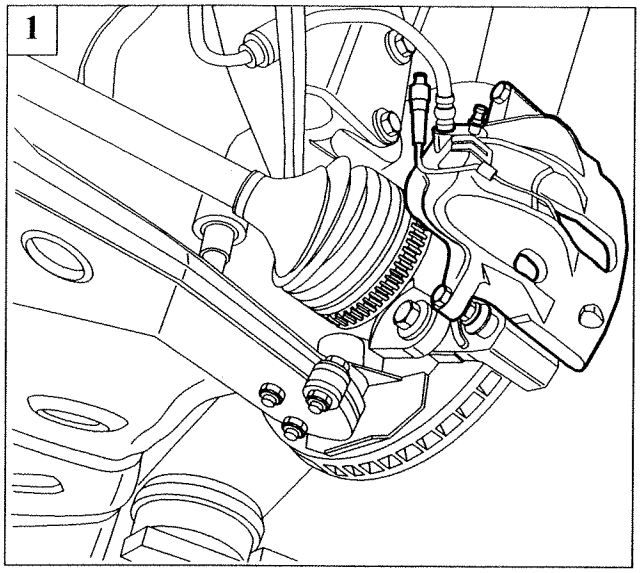

P3U05CB01

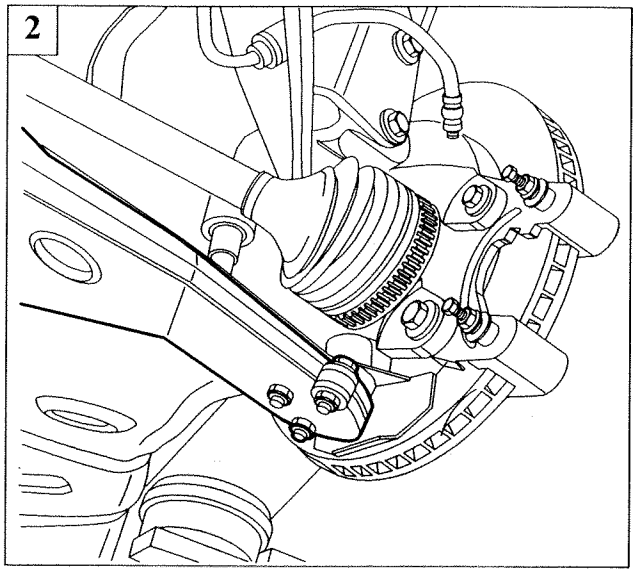

P3U05CB02

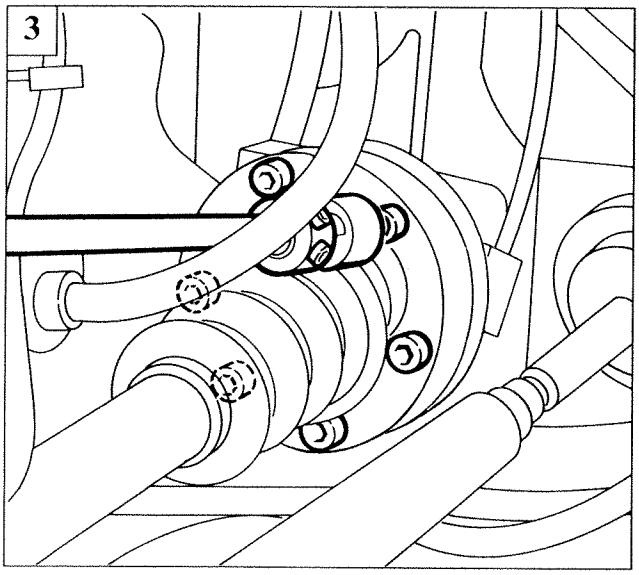

P3U05CB03

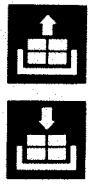

1. disconnect the brake pad wear sensor connector, then disconnect the brake caliper and secure it as appropriate in the wheelarch;
2. undo the bolts securing the balljoint head to the wishbone;
3. disconnect the left drive shaft coupling by undoing the bolts indicated;
4. undo the bolts securing the shock absorber to the vertical link;
5. withdraw the left drive shaft complete with vertical link and brake disc;

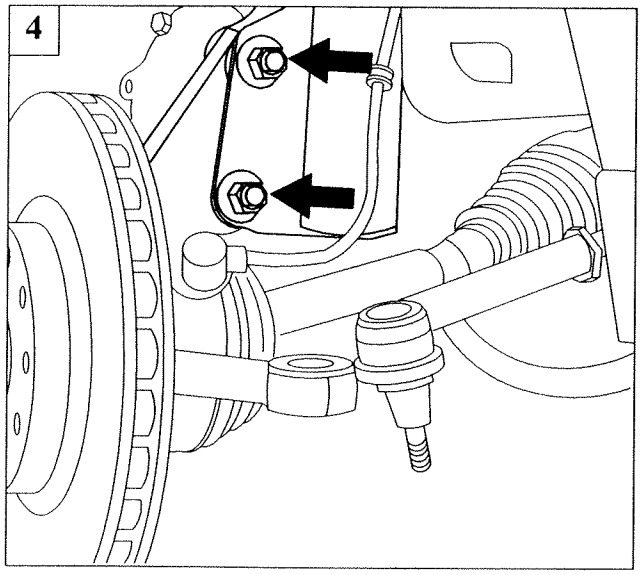

P3U05CB04

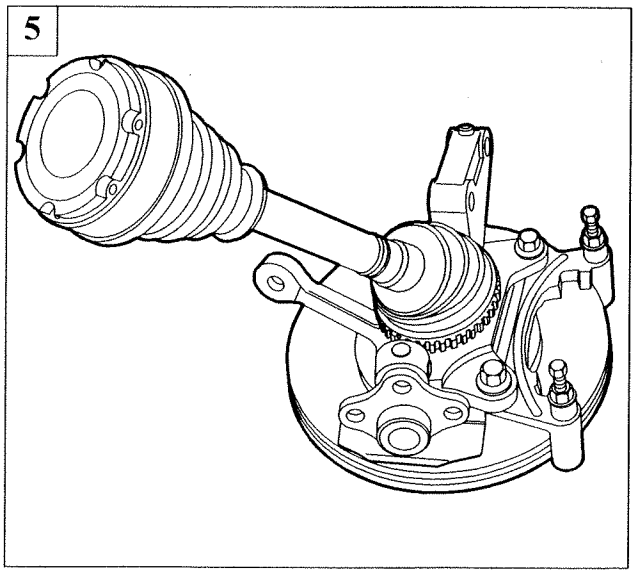

P3U05CB05

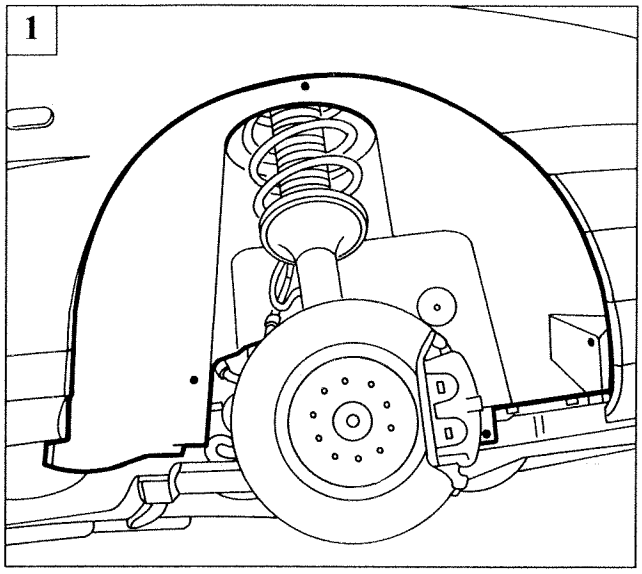

P3U06CB01

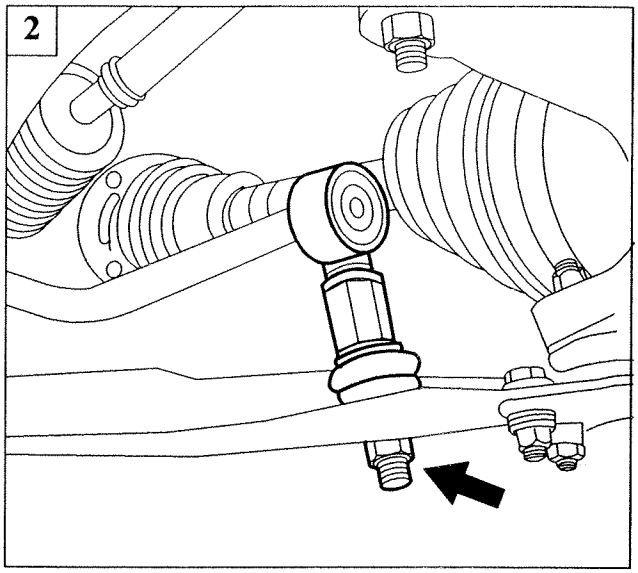

P3U06CB02

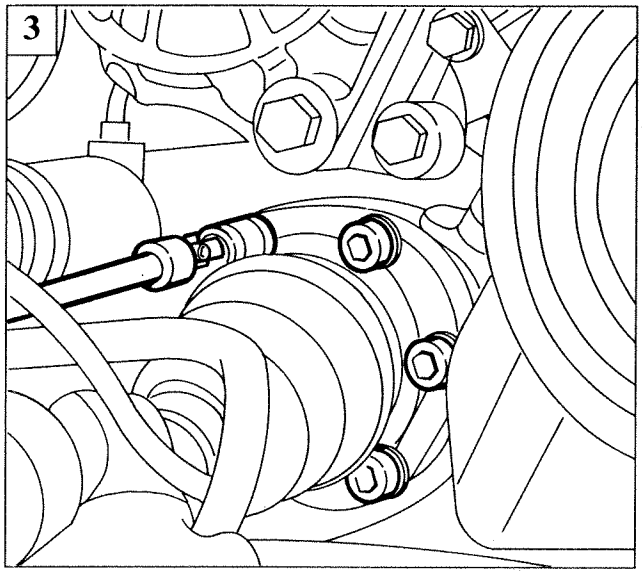

P3U06CB03

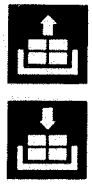

1. disconnect the additional plastic right wheel arch (two parts);
2. undo the nut securing the connecting link to the wishbone;
3. disconnect the right drive shaft coupling, then position in the rear of the engine compartment;
4. undo the bolts securing the intermediate shaft;
5. withdraw the intermediate shaft from the differential;

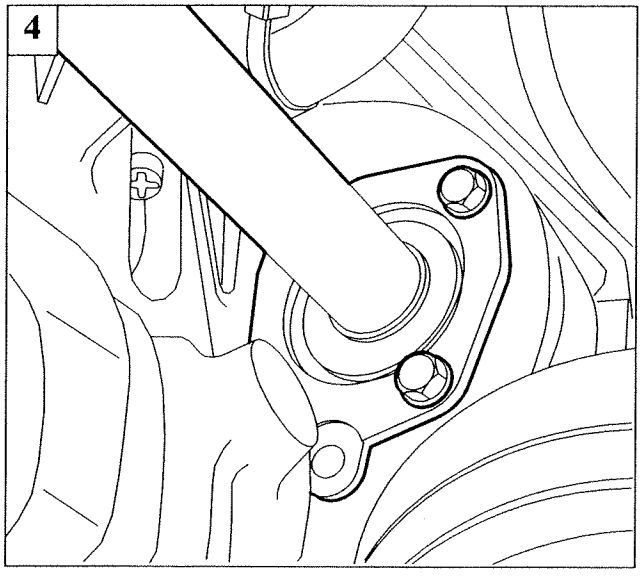

P3U06CB04

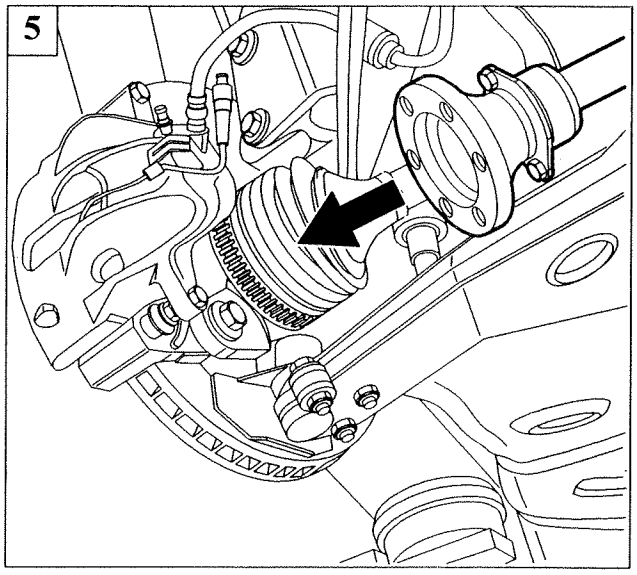

P3U06CB05

Copyright Fiat Auto

21-27.

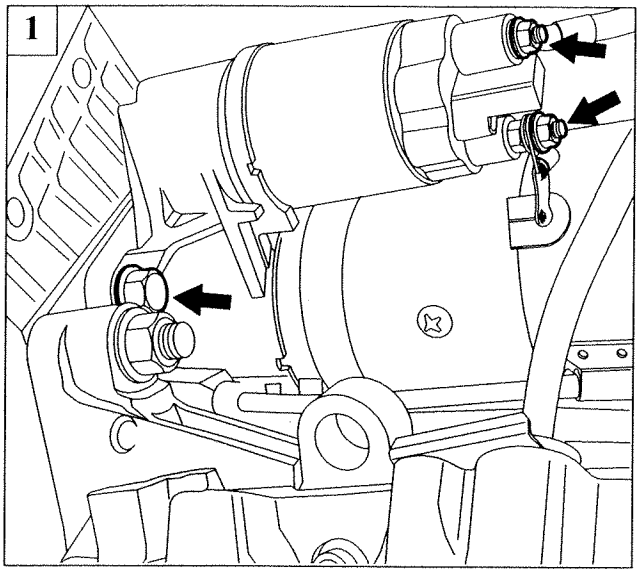

P3U07CB01

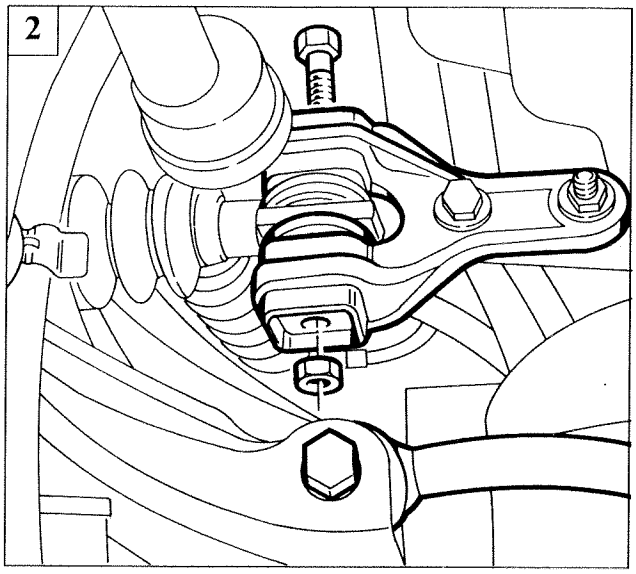

P3U07CB02

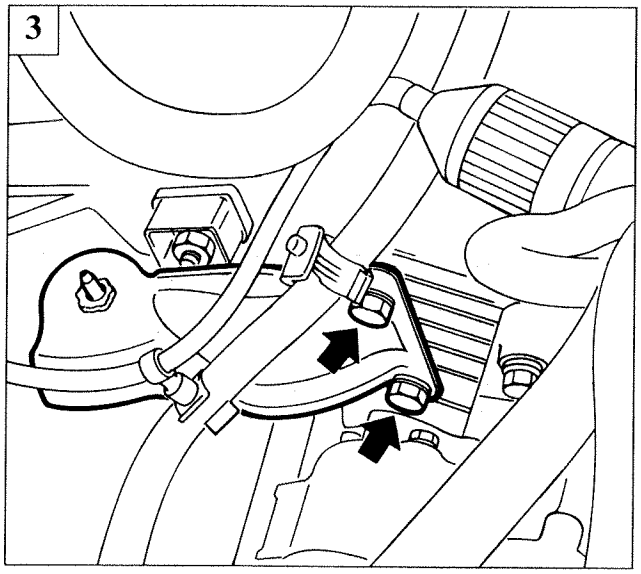

P3U07CB03

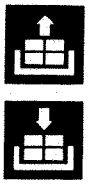

1. disconnect the starter motor supply cables, then undo the bolts securing the starter motor to the gearbox-differential unit and remove it;
2. disconnect the two gearchange control levers;
3. remove the bottom bolt securing the gearbox control reaction bracket;
4. undo the bolt on the expansion tank and move it aside;
5. disconnect the battery's positive lead (and starter motor) from the connector block;

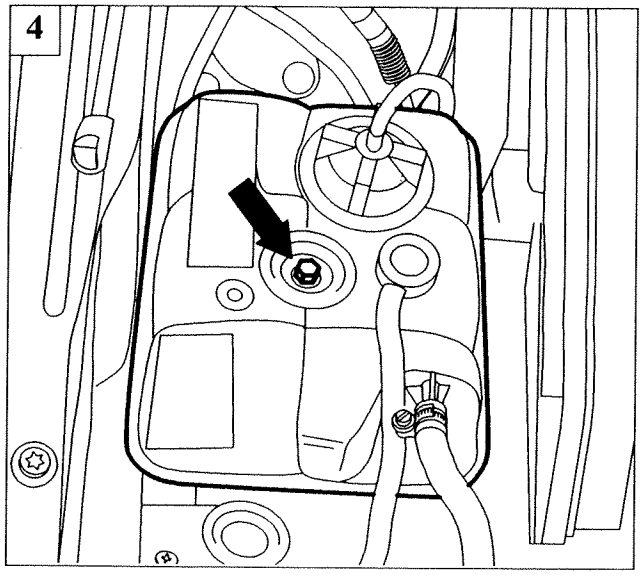

P3U08AB01

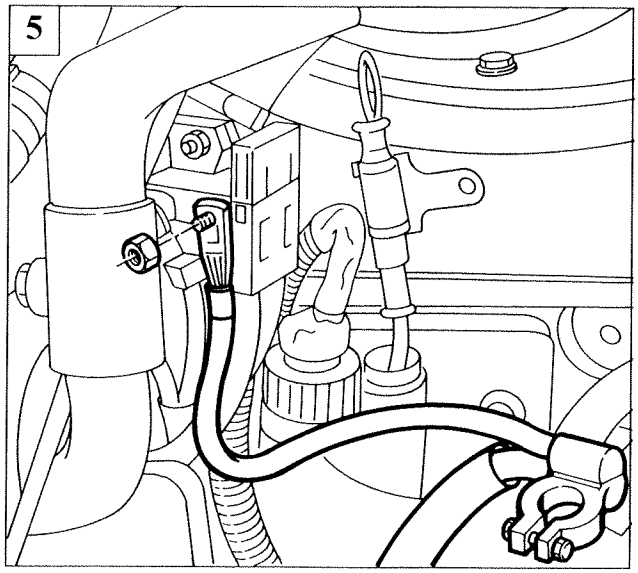

P3U08AB02

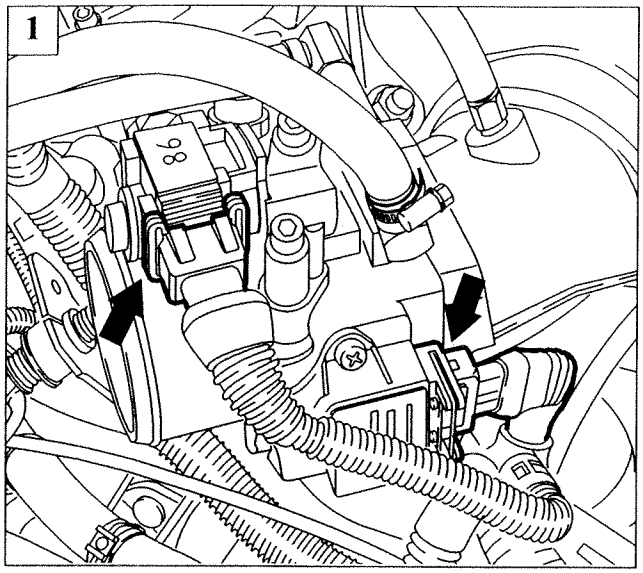

P3U09AB01

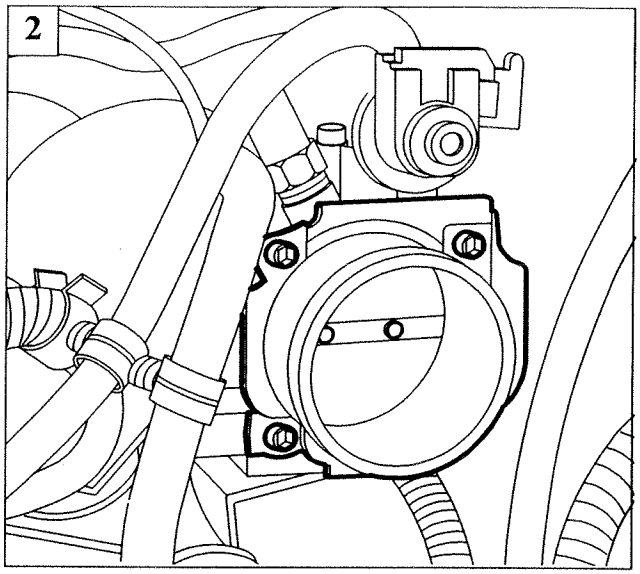

P3U09AB02

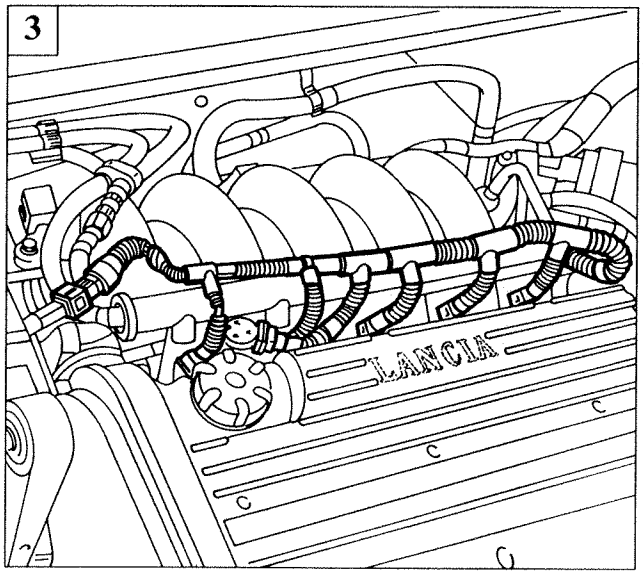

P3U09AB03

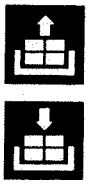

1. disconnect the connectors on the throttle body;
2. undo the attachment bolts and remove the throttle body;
3. disconnect the fuel injectors and move the wiring aside;
4. undo the bolts and remove the fuel supply manifold;
5. undo the bolts securing the E.G.R. valve and remove it;

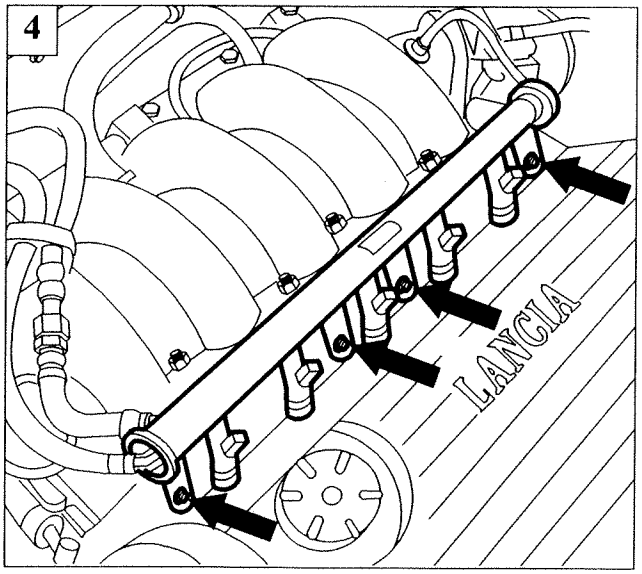

P3U09AB04

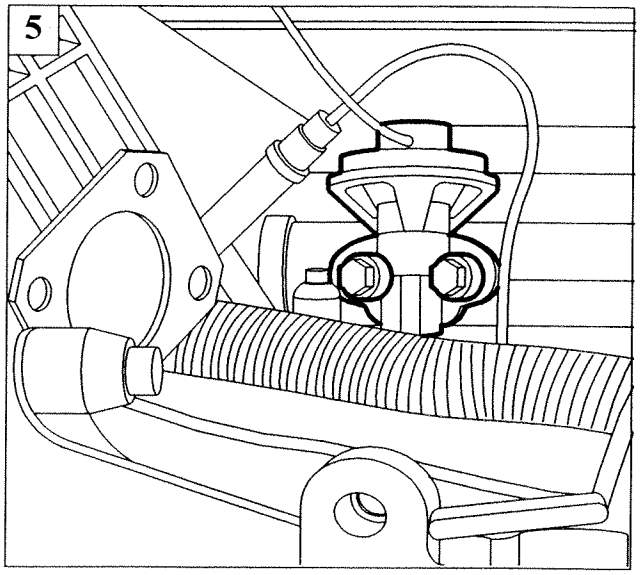

P3U09AB05

Copyright Fiat Auto

1

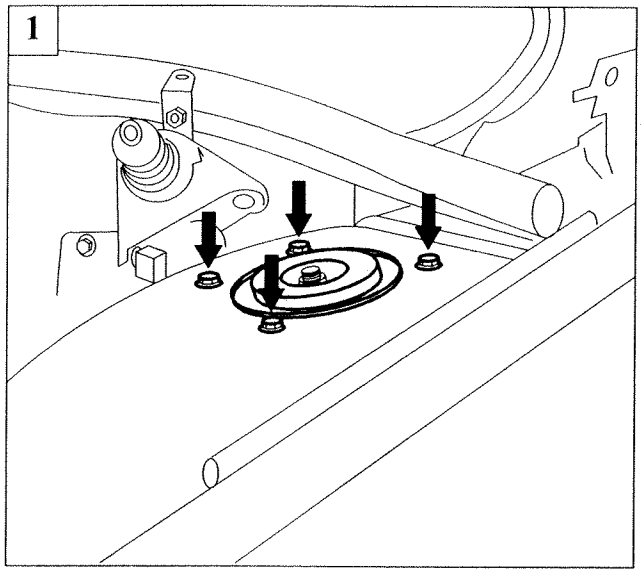

P3U09CB01

2

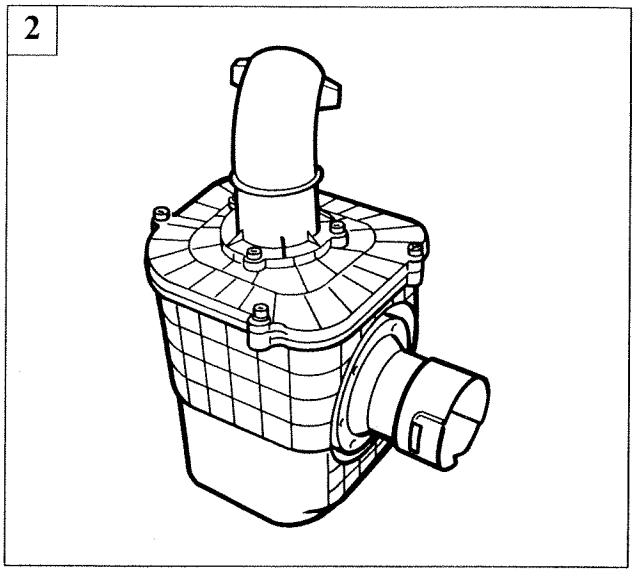

P3U09CB02

3

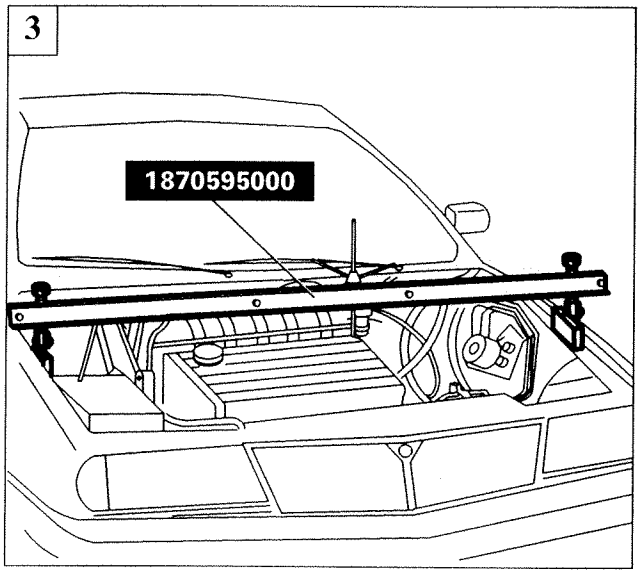

P3U10AB01

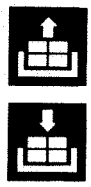

1. undo the top bolts securing the shock absorber to the body shell, and remove it;
2. remove the air cleaner assembly by disconnecting the inlet pipe (which is a press fit);
3. install the engine support crossbeam 1870595000;
4. connect one end of the chain to the adjustable support on the crossbeam;
5. connect the other end of the chain to the engine; by using the crossbeam's adjustable support, place the chain under slight tension;

4

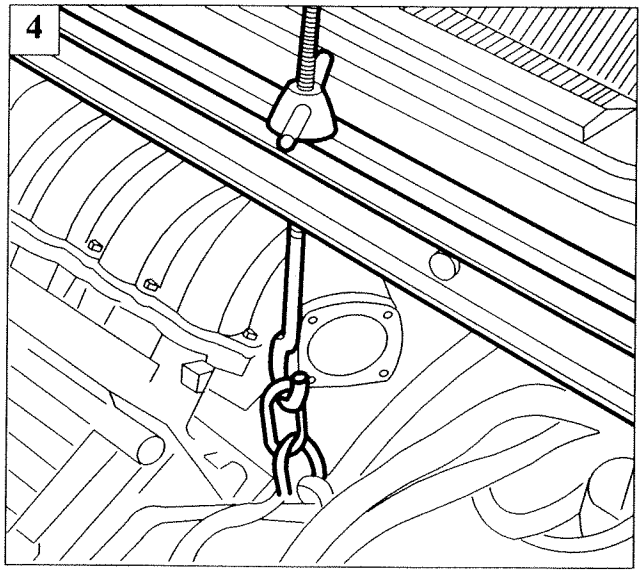

P3U10AB02

5

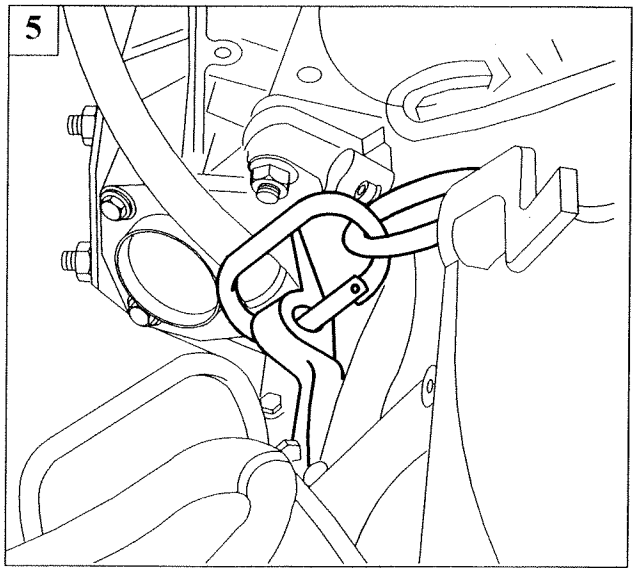

P3U09CB05

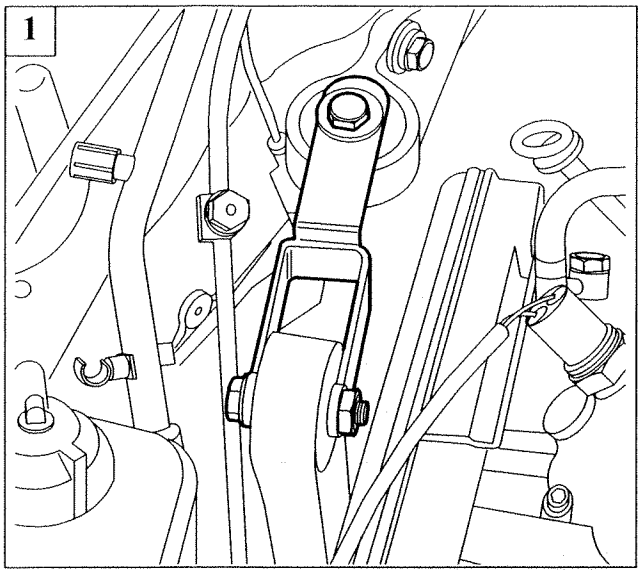

P3U10CB01

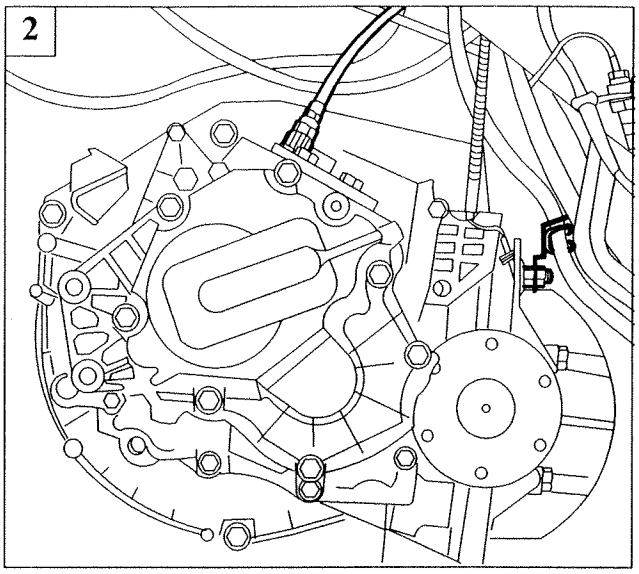

P3U10CB02

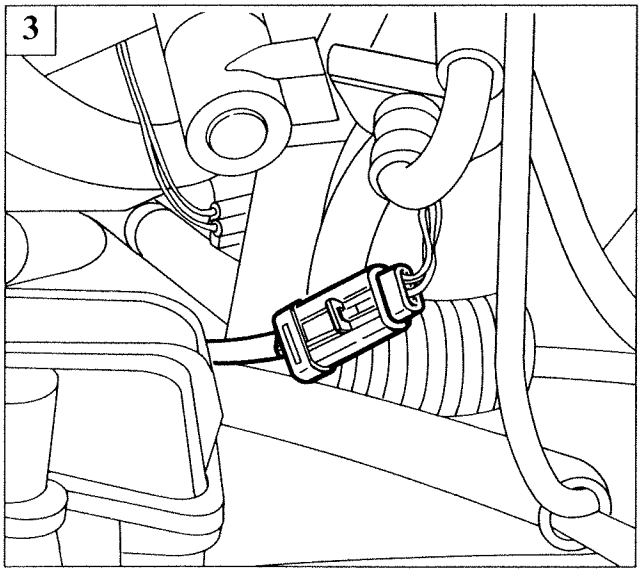

P3U10CB03

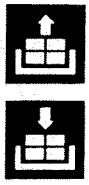

1. undo the bolts securing the engine's top right mounting and remove it;
2. remove the reverse gear inhibitor and undo the nut securing the cable mounting bracket on the gearbox;
3. disconnect the vehicle speed sensor wiring connection;
4. undo the bolts securing the engine bottom mounting, gearbox side, to the chassis;
5. undo the nut securing the engine's rear mounting in order to enable the gearbox-differential unit to be withdrawn;

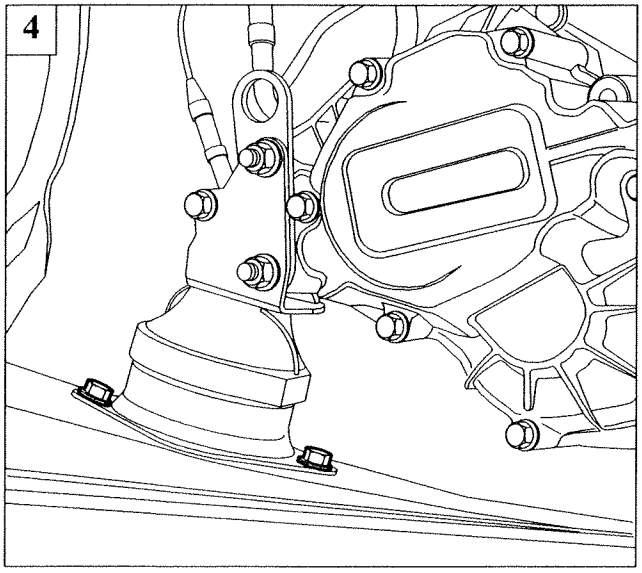

P3U10CB04

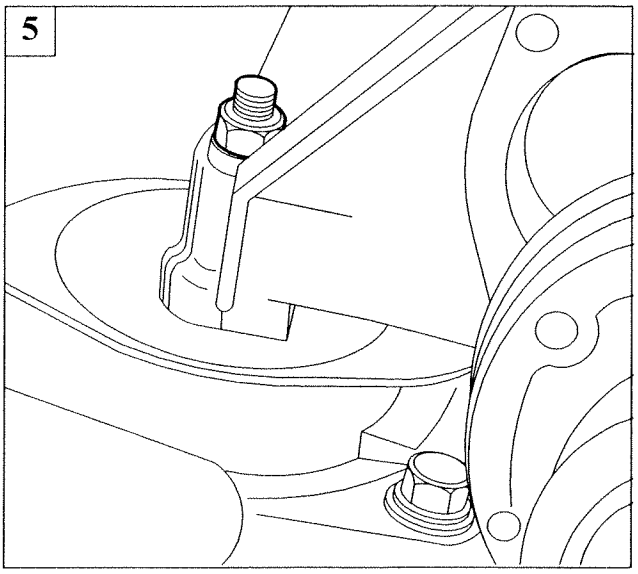

P3U10CB05

Copyright Fiat Auto

21-27.

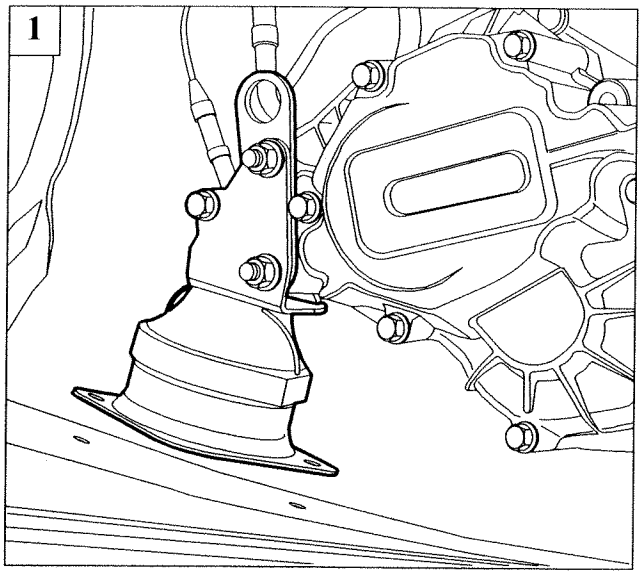

P3U11CB01

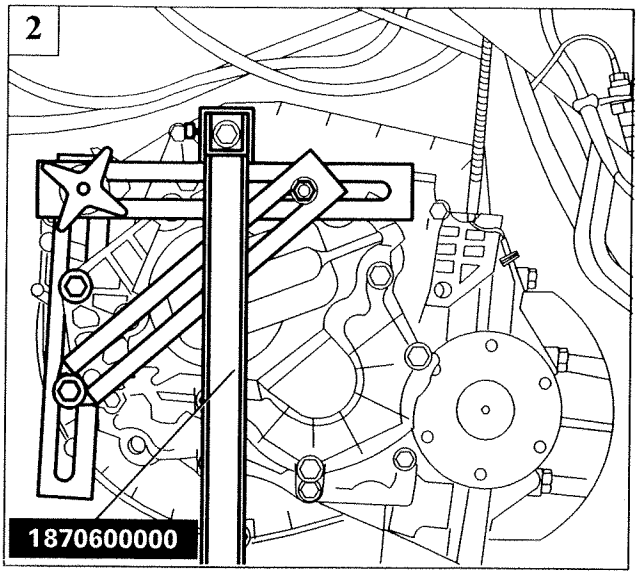

P3U11CB02

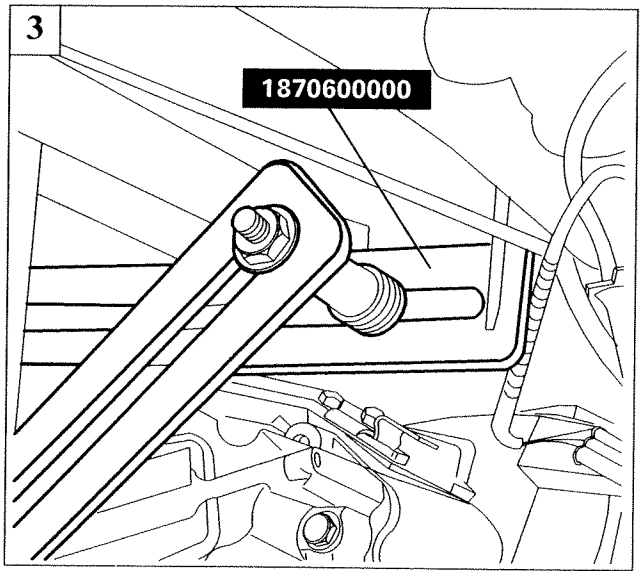

P3U11CB03

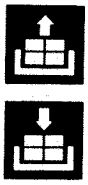

1. lift the engine slightly using the adjustable support on the crossbeam, then undo the bolts securing the engine mounting, gearbox side, and remove it;
2. prepare the gearbox support tool 1870600000 by positioning it on the hydraulic jack;
3. detail of attachment of tool 1870600000 with spacer and washers;
4. detail of attachment of tool 1870600000 with C-bracket locked on the gearbox;
5. detail of attachment of tool 1870600000 with bracket connected to the gearbox;

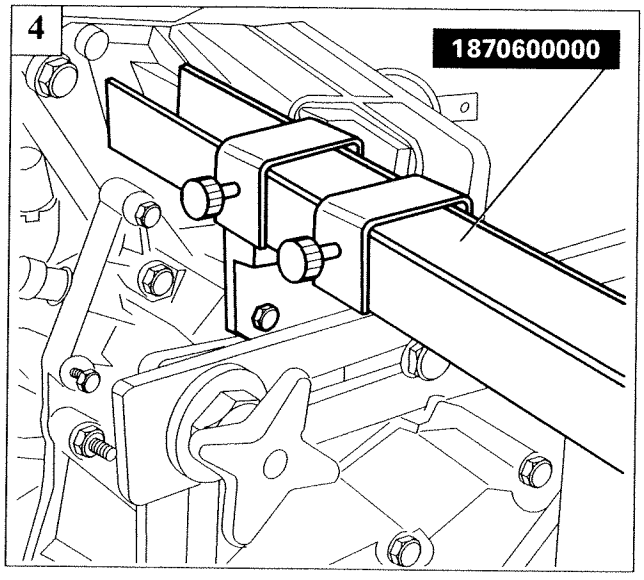

P3U11CB04

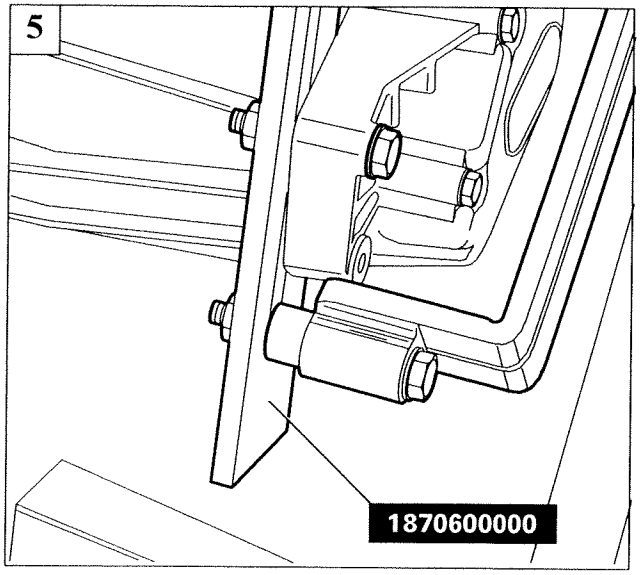

P3U11CB05

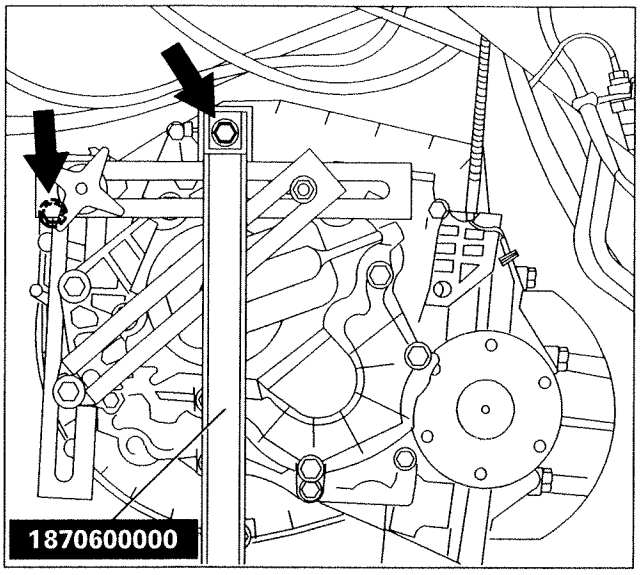

P3U12CB01

- undo the front bolts securing the gearbox-differential unit to the engine;

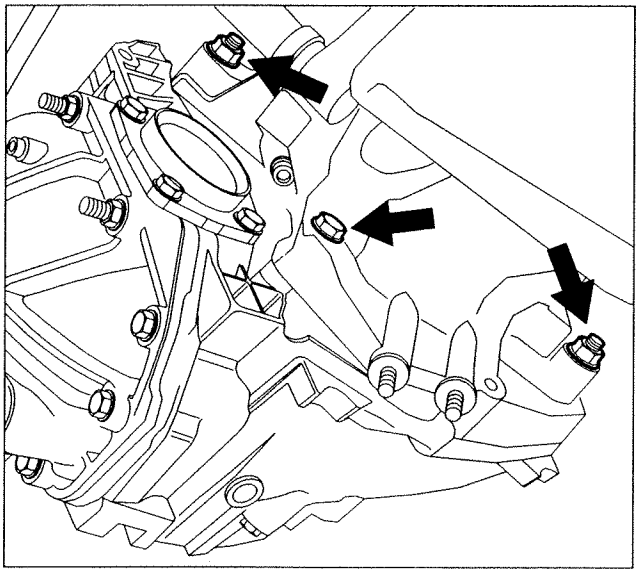

P3U12CB02

- undo the remaining bolts securing the gearbox-differential unit to the engine;

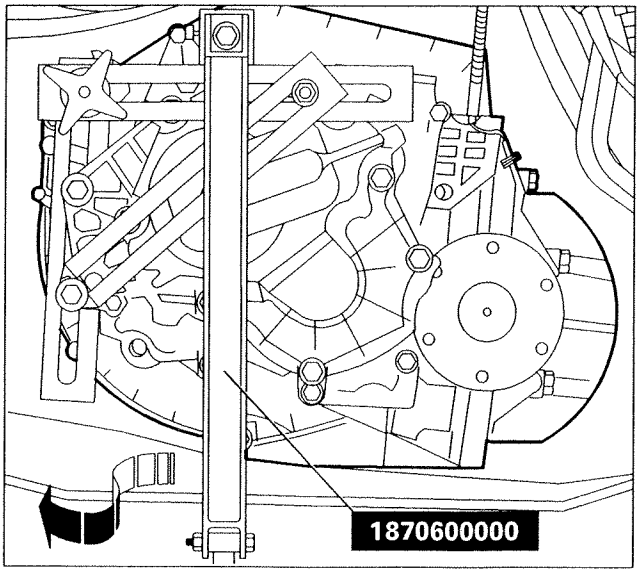

P3U12CB03

- manoeuvre the gearbox-differential unit to release it from the centring pins on the engine and to withdraw the main shaft from the driven plate, then lower the hydraulic jack and withdraw the gearbox-differential unit, manoeuvring it in the direction shown by the arrow.

Refitting

NOTE *To refit, reverse the procedure for removal.*

Copyright Fiat Auto

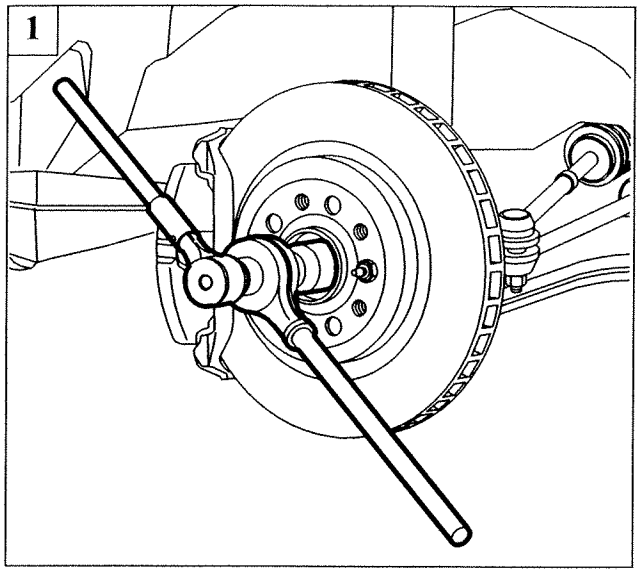

P3U14AB01

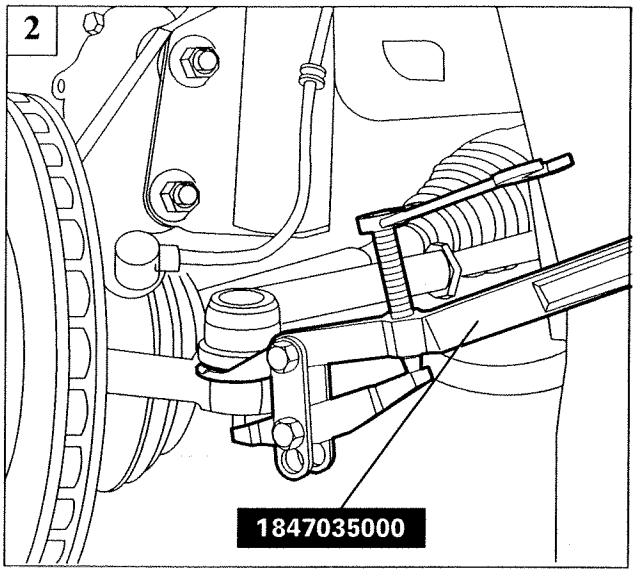

P3U04CB03

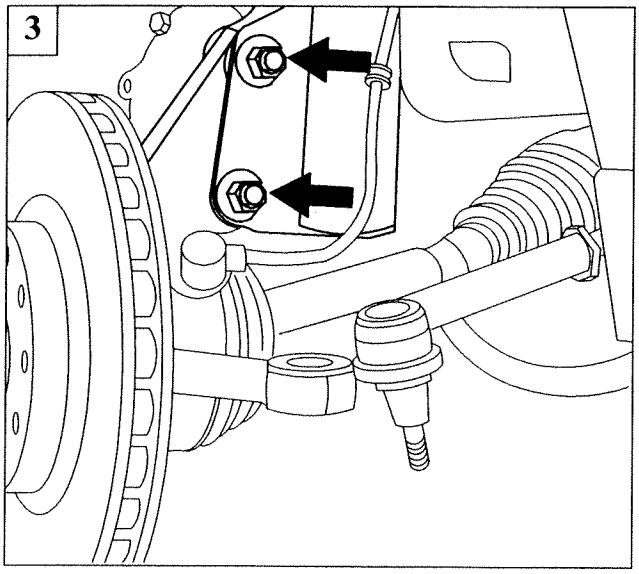

P3U05CB04

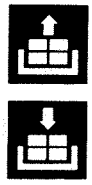

REMOVING-REFITTING

Place the car on ramps, remove the front wheels and the wheelarch cover, then proceed as follows:

1. relieve the staking on the wheel hub nut and unscrew it;
2. undo the bolt on the track rod end balljoint head, then remove the balljoint head from the vertical link using tool 1847035000;
3. undo the bolts securing the shock absorber strut to the vertical link;
4. undo the bolts securing the coupling on the gearbox side and remove the drive shaft;
5. refit the drive shafts in reverse order to removal, then tighten the wheel hub nut to the correct torque and stake it in accordance with the instructions given in Section 44.

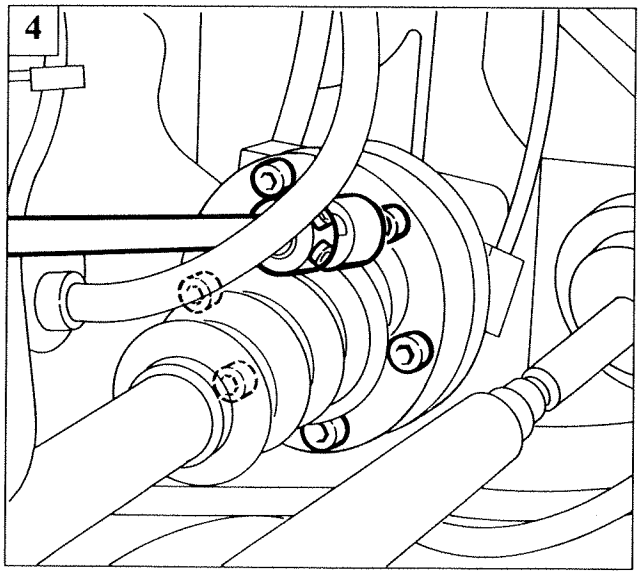

P3U05CB03

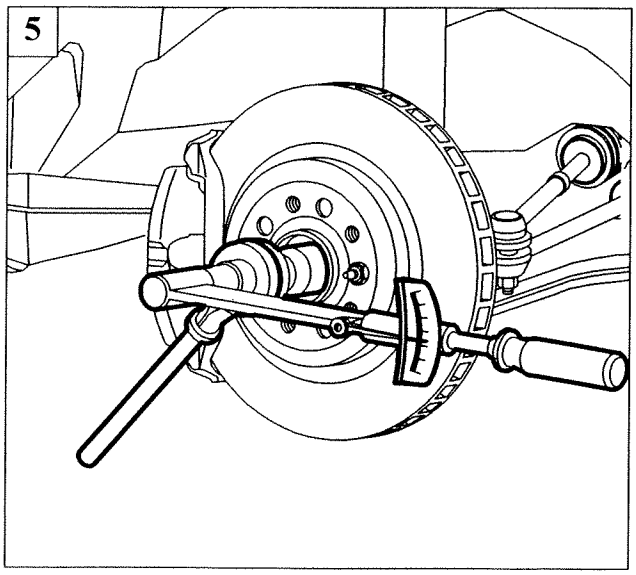

P3U14AB02

1

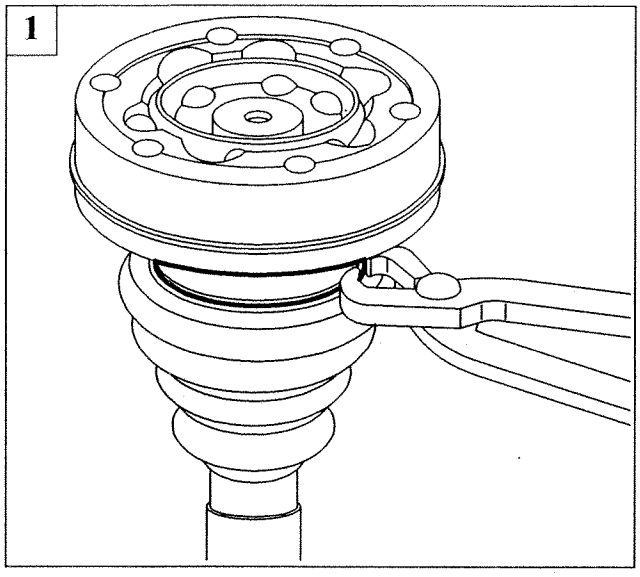

P3U15AB01

2

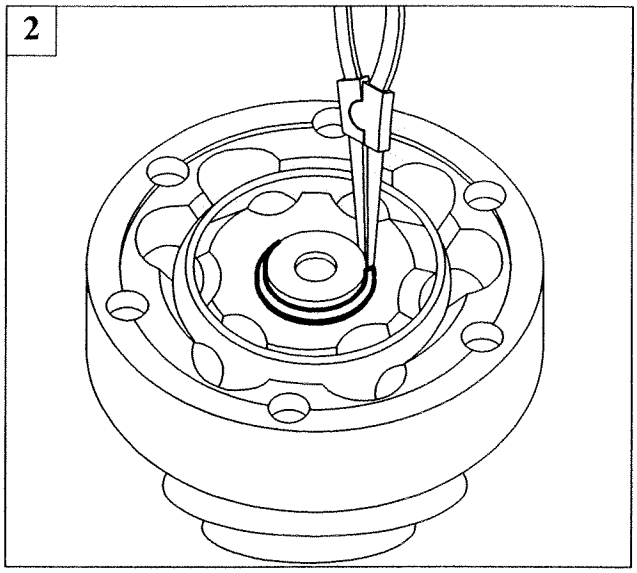

P3U15AB02

3

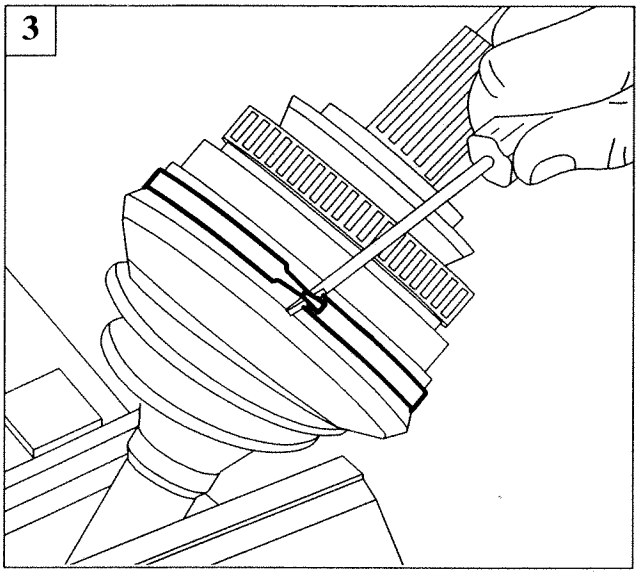

P3U15AB03

DISMANTLING

1. Place the drive shaft in a vice, with protections, and remove the clip from the protective gaiter on the coupling, gearbox side;
2. remove the circlip, then withdraw the coupling and then the protective gaiter;
3. remove the clips from the protective gaiter on the coupling, wheel side;
4. use tools 1845062000 and 1847017001 simultaneously to release the circlip, then remove the coupling on the wheel side;
5. check that the drive shaft is not deformed or out of true.

4

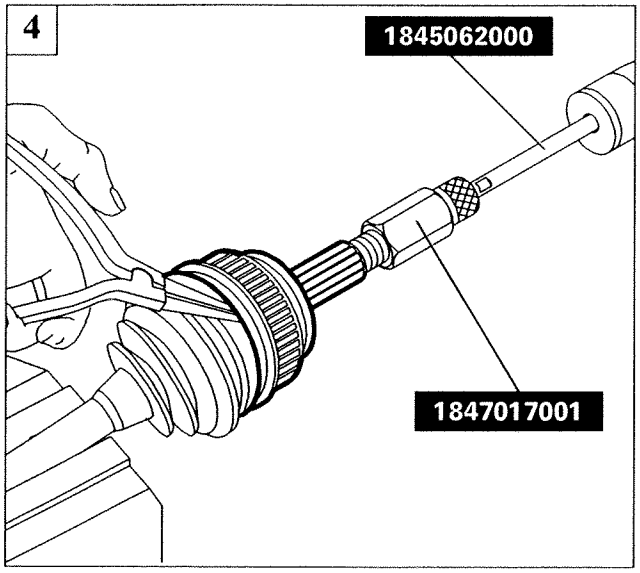

P3U15AB04

5

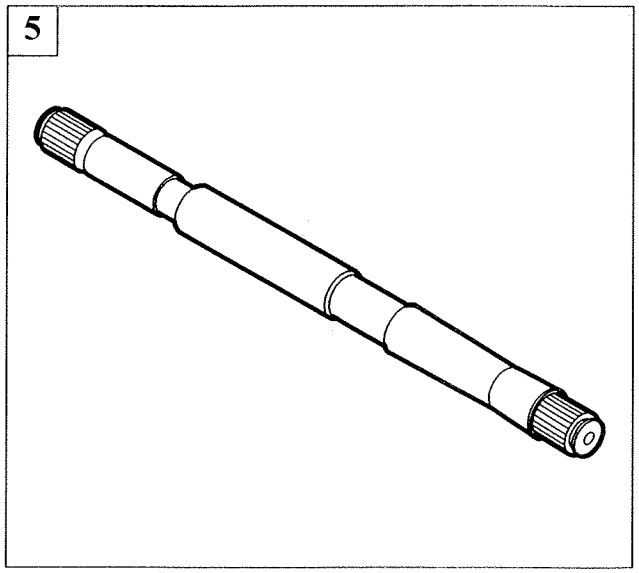

P3U15AB05

Copyright Fiat Auto

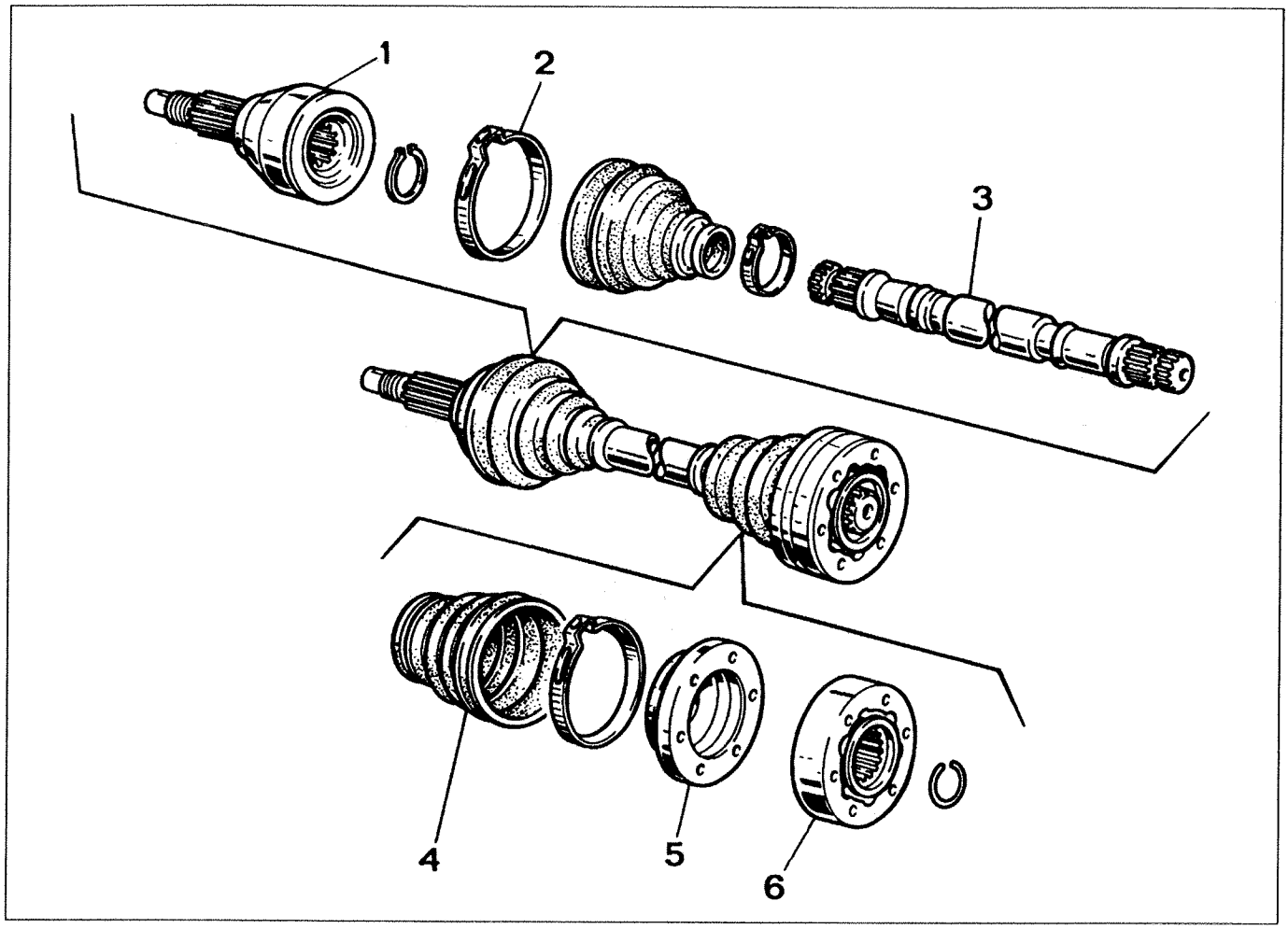

P3U16AB01

Drive transmission components

1. Constant velocity joint, wheel side
2. Gaiter retaining clip
3. Drive shaft
4. Constant velocity gaiter
5. Flange for constant velocity joint, gearbox side
6. Constant velocity joint, gearbox side

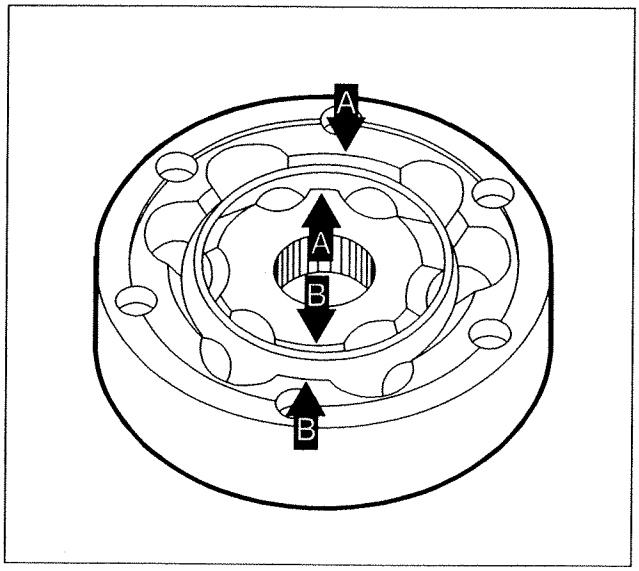

P3U16AB02

Position of constant velocity joint, gearbox side

NOTE *During removal of the couplings, if the balls emerge from their seats, to ensure correct refitting adhere to the references in the figure; i.e. "A" must line up with "A" and "B" with "B", otherwise the coupling will remain locked.*

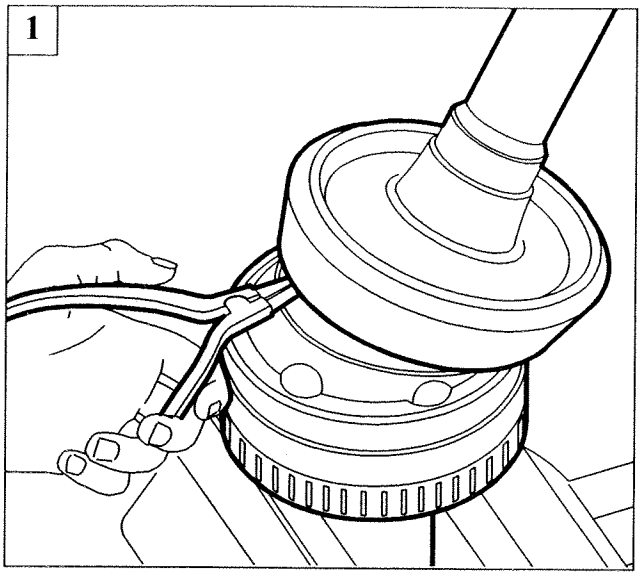

REFITTING

Fit the constant velocity joint protective gaiters on the drive shaft, then proceed as described below.

It is advisable to fit a new protective gaiter whenever it is removed.

1. Use circlip pliers on the circlip to facilitate insertion of the drive shaft, then refit the clips;

NOTE *When refitting the constant velocity joints on the gearbox side, they must be coupled to the shaft in accordance with the table below.*

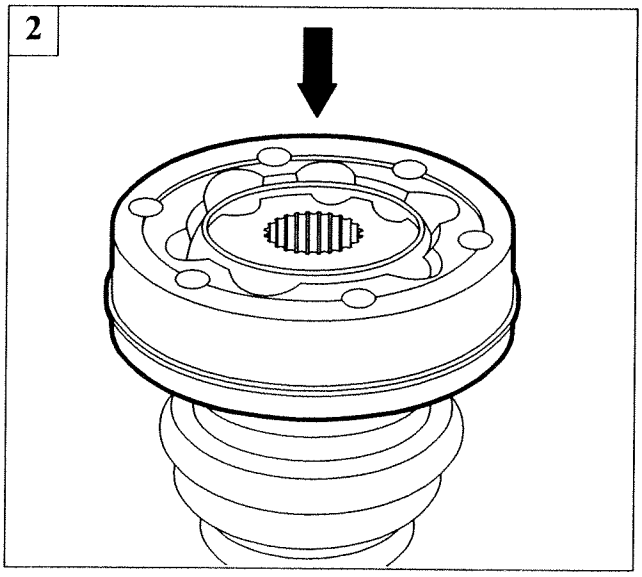

Shaft classification		Joint classification	
Category	Colour	Category	Colour
A	Blue	A	Blue
		B	White
B	Red	C	Red

The category B joints are coupled with both categories of drive shaft.

2. fit the joint on the drive shaft;

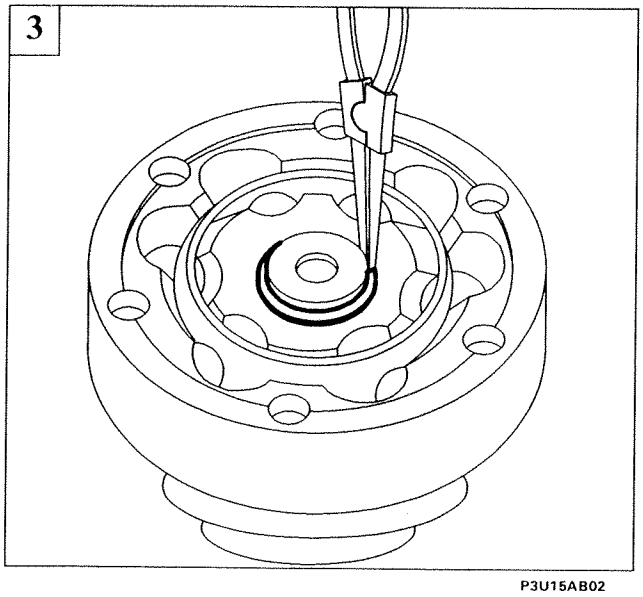

3. fit the circlip, then refit the clip on the protective gaiter.

Copyright Fiat Auto

21-27.

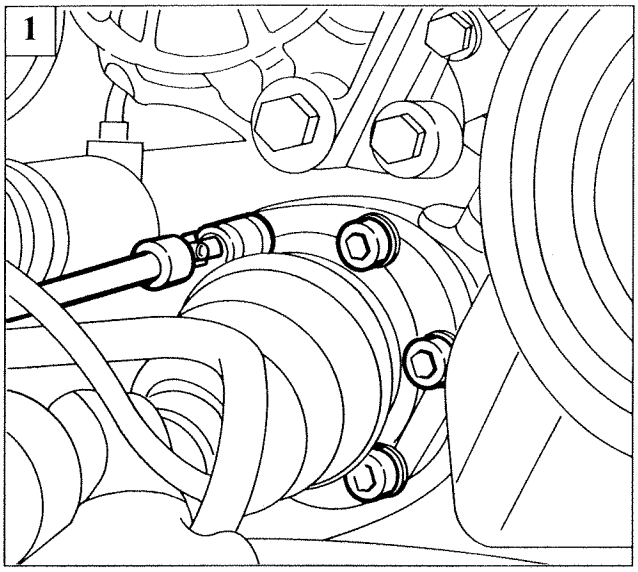

P3U06CB03

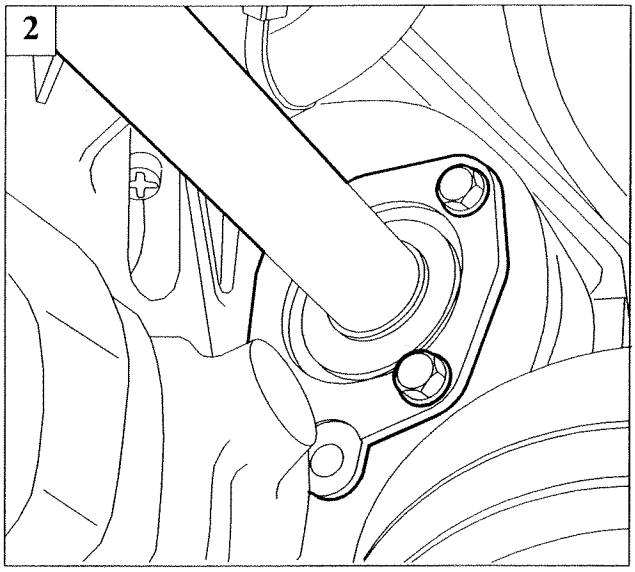

P3U06CB04

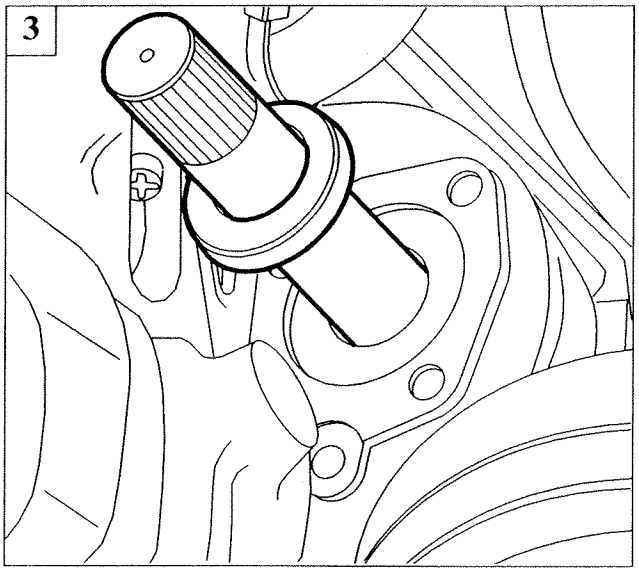

P3U18AB01

REMOVING-REFITTING

1. Disconnect the right drive shaft coupling by undoing the bolts indicated, then push it towards the rear of the engine compartment;
2. undo the intermediate shaft bolts;
3. withdraw the dust excluder;
4. withdraw the intermediate shaft;
5. check that the intermediate shaft (1) is not deformed or out of true; check that the bearing (2) is not scored, overheated or excessively worn.

The bearing is not supplied as a spare part, so if it is found to be faulty, the complete intermediate shaft must be replaced.

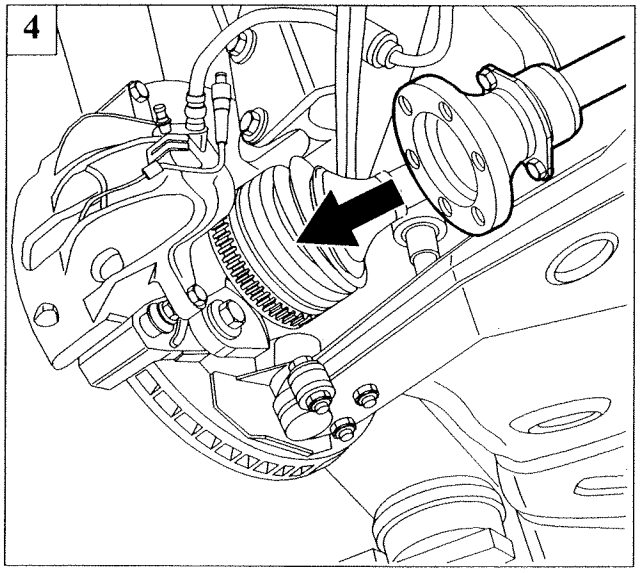

P3U06CB05

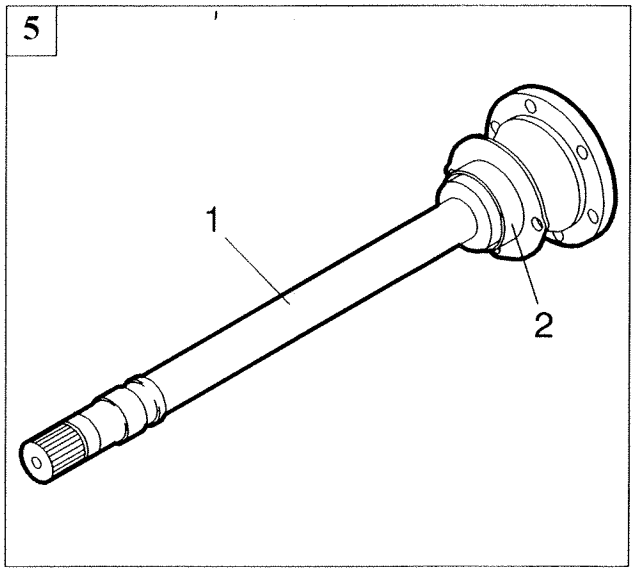

P3U18AB02

MANUAL GEARBOX WITH SYNCHROMESH ON REVERSE

The gearbox fitted to the LANCIA k has synchromesh on reverse to improve engagement of reverse gear.
The introduction of this improvement has involved modifying the reverse gear shaft and its reverse idler gear, necessary for reversal of drive. The latter consists of two parts which accommodate the synchronizer.
The engagement of reverse gear causes the fork (5) to move, and consequently the sliding gear (2) (on which the synchronizer is located) also to move, joining it to the gear (3).
The gear (2) is always engaged with the reverse gear (1) on the main shaft; the gear (3) is always engaged with the gear (4) on the 1st/2nd gear engagement sleeve on the layshaft.
There is also a safety device (6) for preventing accidental engagement of reverse gear; this device is controlled by a cable (7), operated by the sliding part (8) of the gearbox lever, so enabling the fork (5) to be released.

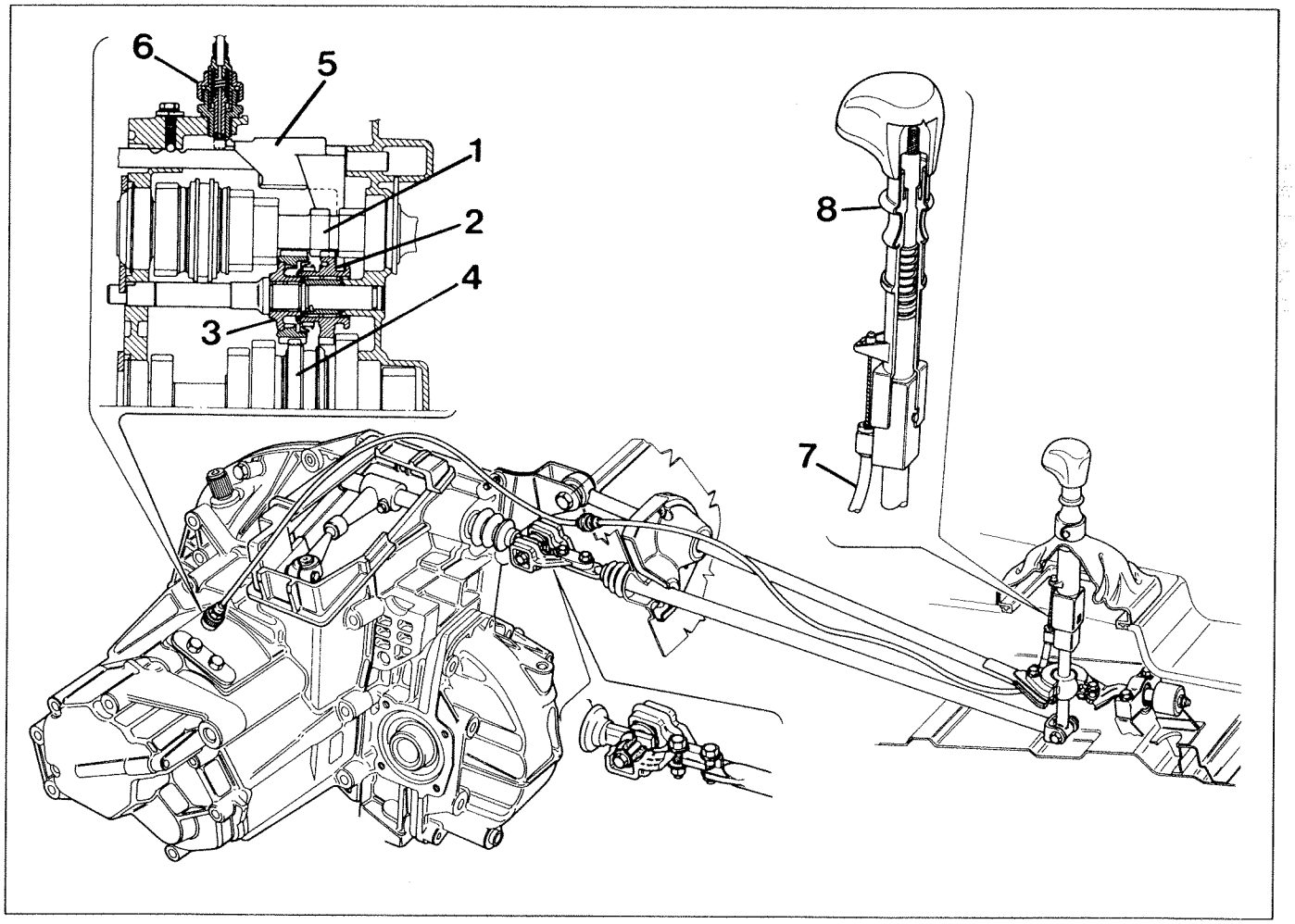

P3U19AB01

Perspective view of the gearbox external linkage with mechanical device for inhibiting reverse gear and partial cross section of the gearbox showing the reverse gear with synchromesh

Copyright Fiat Auto

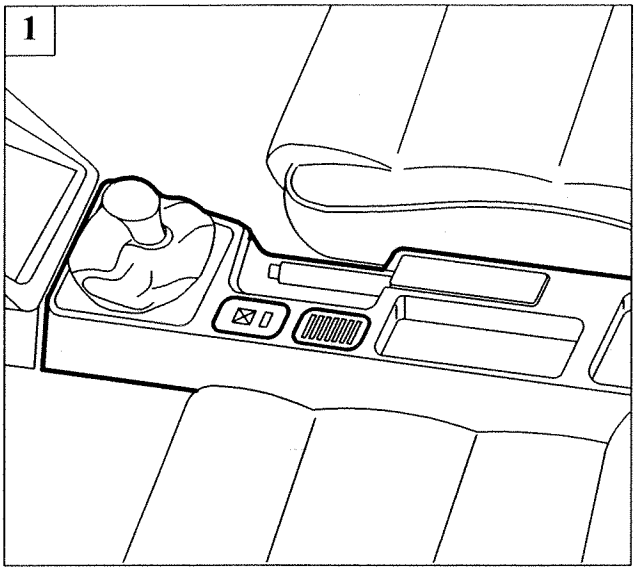

P3U20AB01

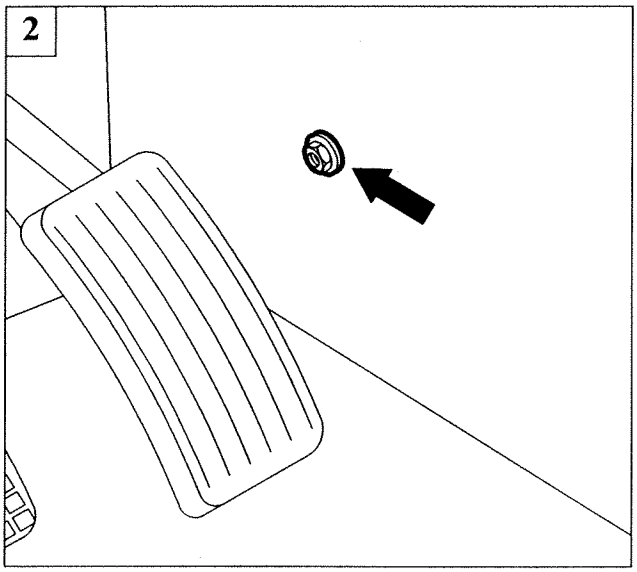

P3U20AB02

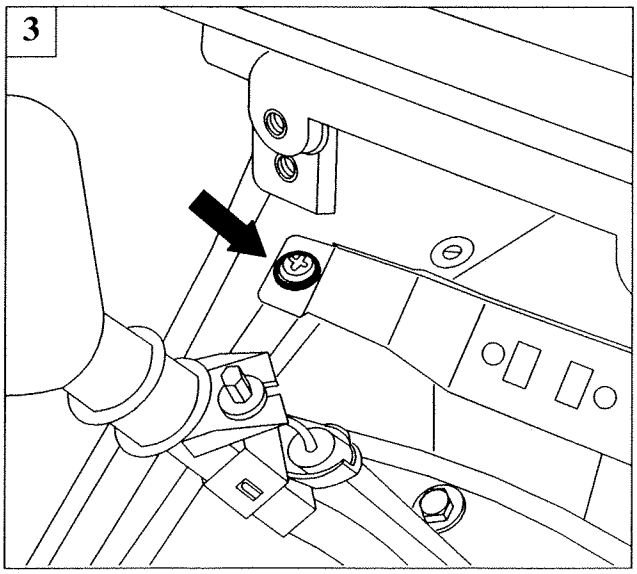

P3U20AB03

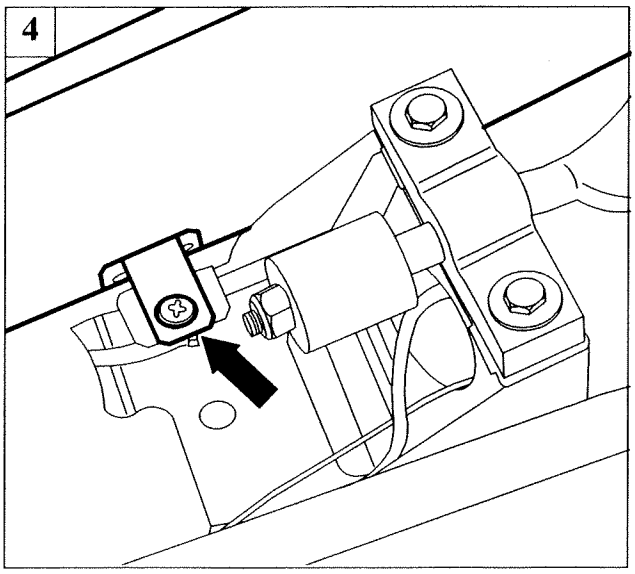

P3U20AB04

REMOVING-REFITTING

To remove the external gearchange linkage, proceed as follows:
1. remove the central console trim as described in Section 70;
2. undo the side bolts on the left bulkhead;
3. undo the front bolts on the left bulkhead;
4. undo the rear bolts on the left bulkhead and remove it;

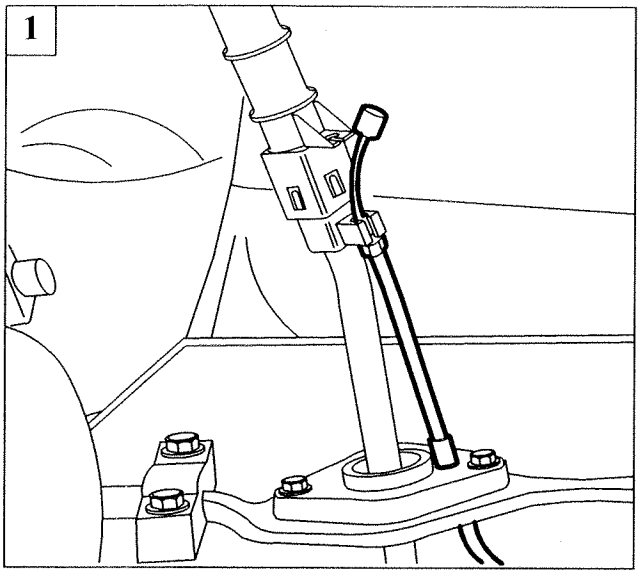

P3U21AB01

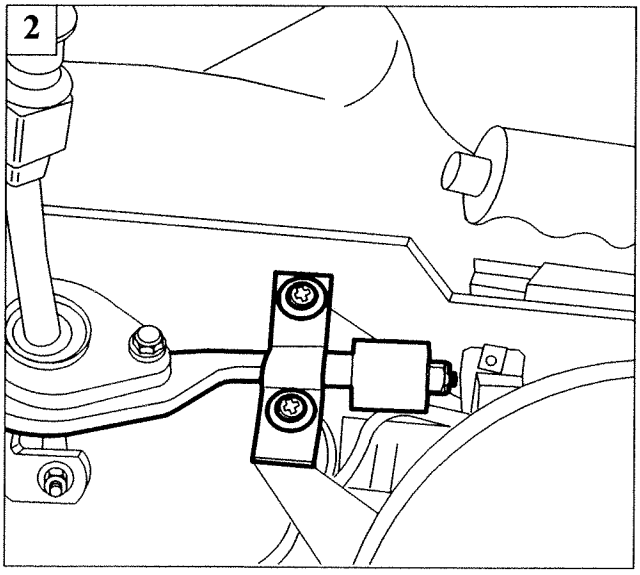

P3U21AB02

1. disconnect the reverse gear inhibitor cable and withdraw it;
2. undo the bolts securing the reaction rod;
3. remove the bolts securing the reaction rod and control rod from the engine compartment;
4. pull the external gearchange linkage assembly until the reaction rod (1) and control rod (2) are withdrawn from their protective gaiters.

When withdrawing the gearchange control rod, be careful of the presence of the stud.

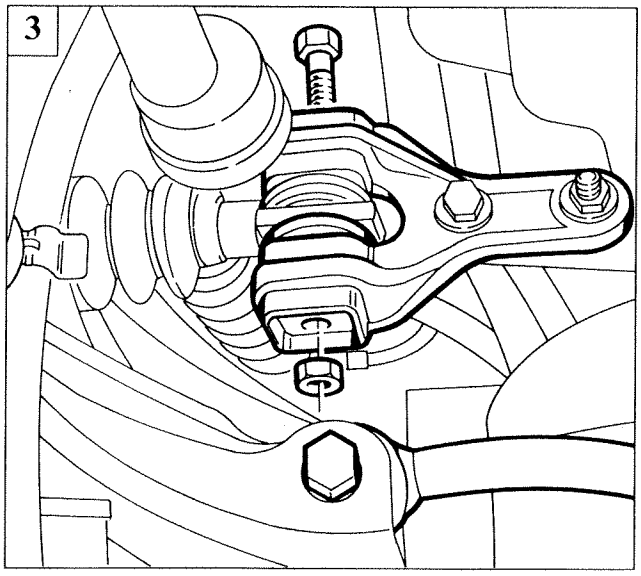

P3U07CB02

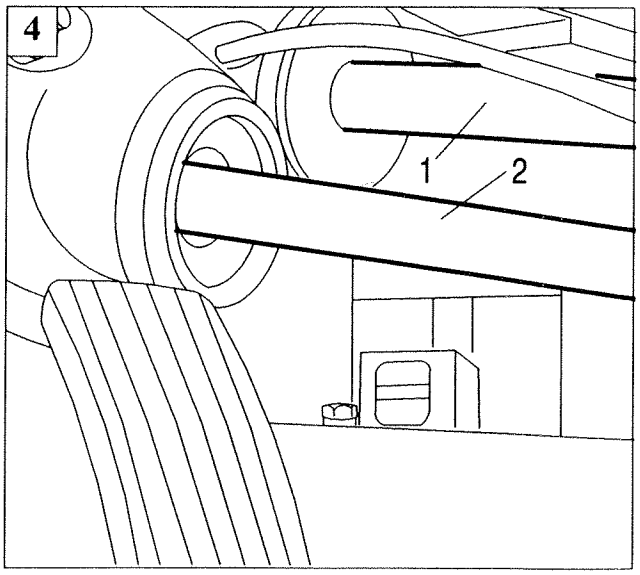

P3U21AB03

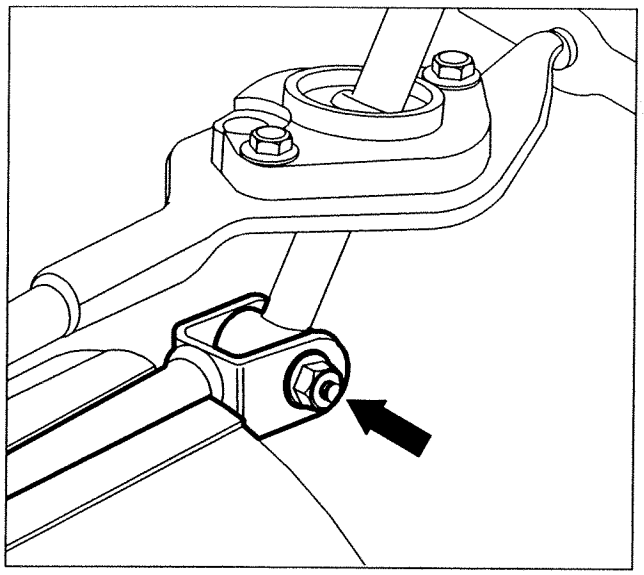

P3U22AB01

DISMANTLING-REASSEMBLY

- Undo the bolt arrowed and detach the control rod;

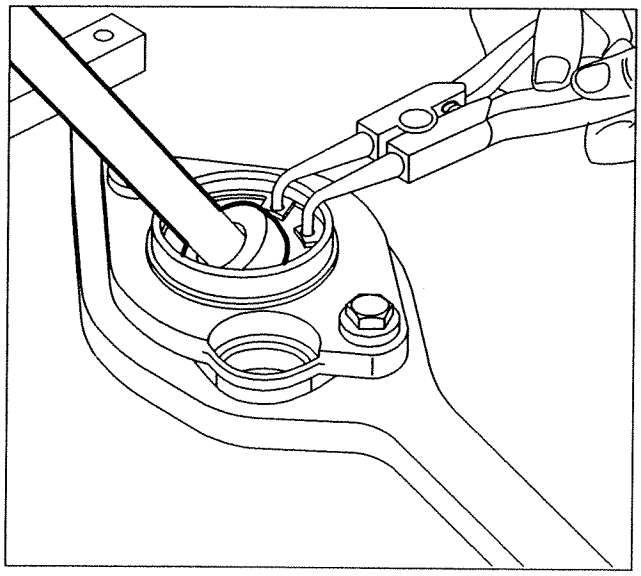

P3U22AB02

- remove the circlip and withdraw the control lever.

Gearbox and differential

Contents

21-27.

page

GEARBOX AND DIFFERENTIAL
- Removing 1
- Refitting 14

VISCODRIVE VISCOUS COUPLING
- Introduction 16
- Operation 17

Copyright Fiat Auto

COPYRIGHT Fiat Auto S.p.A.

Reproduction of all or part of the text and illustrations is prohibited.

The information in this publication is intended as a guide and could be superseded by modifications introduced by the Manufacturer at any time for technical and commercial reasons or in accordance with local regulations.



Fiat Auto S.p.A.
Direzione Marketing Commerciale
Direzione Post-Vendita - Servizi Assistenziali
10134 TURIN (Italy) - Corso E. Giambone, 33
Print no. 506.475/01 - Ottobre 1994 - '500
Printed in Italy - Tip. Europrint - Torino

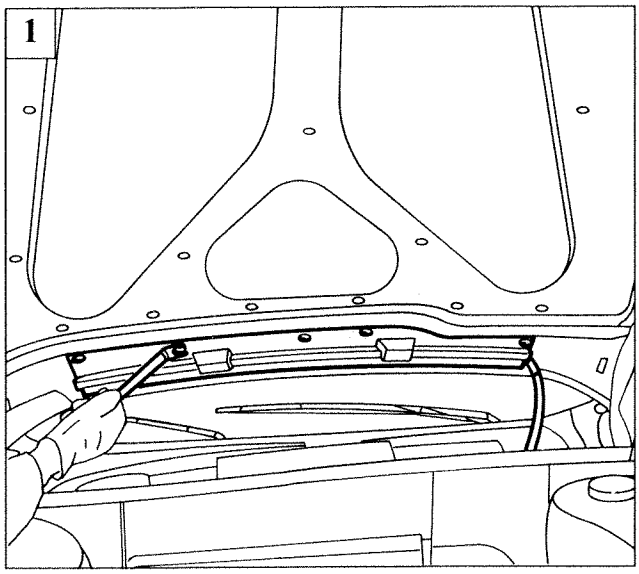

P3U01CB01

REMOVING

Place the vehicle on ramps, remove the front wheels, disconnect the battery and remove it.

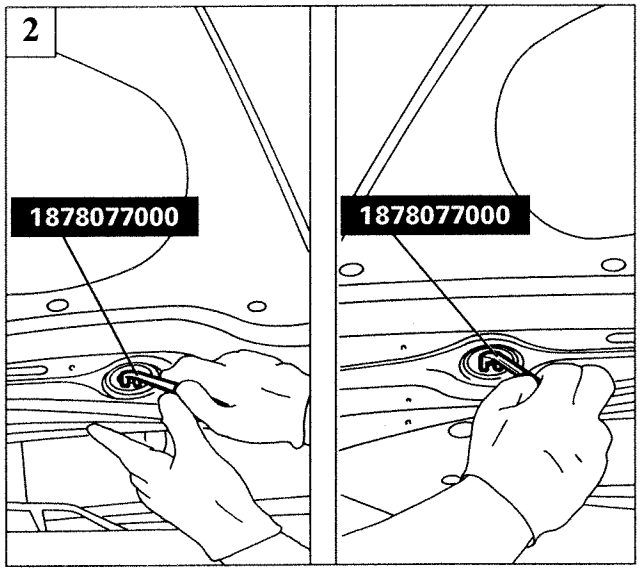

P3U01CB02

NOTE *The operations described in points 1, 2, 3 and 4 of this page are not compulsory in order to remove and refit the gearbox and differential unit; however, they can facilitate some stages.*

Proceed as described below:
1. remove the buttons shown in the figure using the tool 1878077000;
2. remove the pipes from the windscreen washer jets;
3. undo the bonnet bolts from the hinge levers;
4. release the retaining clips from the gas shock absorbers, then remove the bonnet;

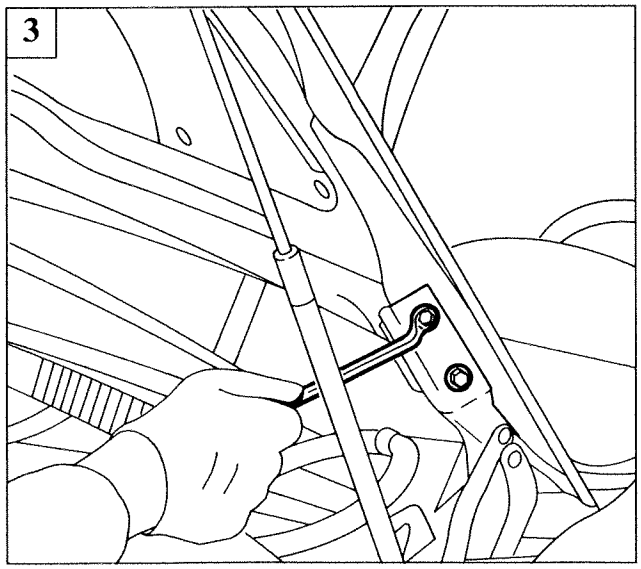

P3U01BB01

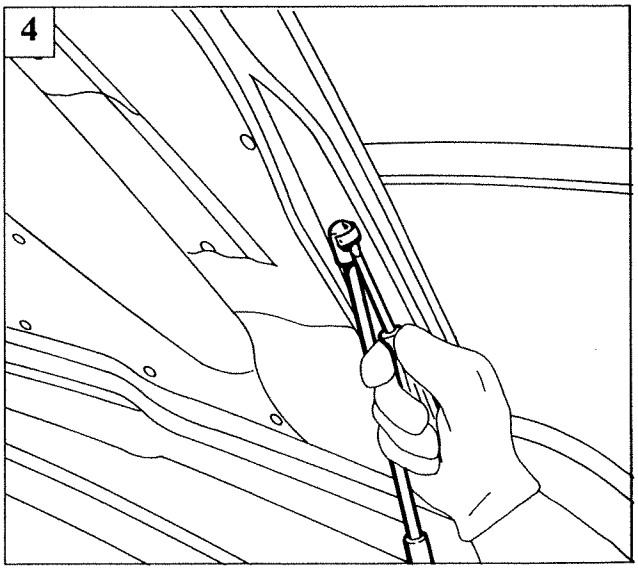

P3U01BB02

Copyright Fiat Auto

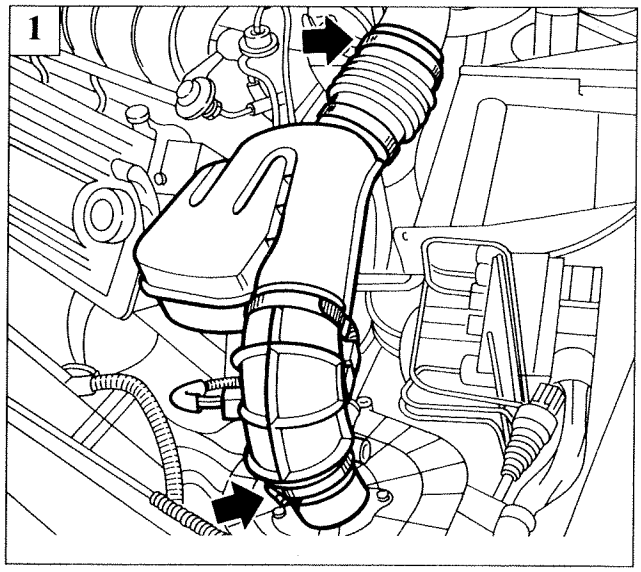

P3U02BB01

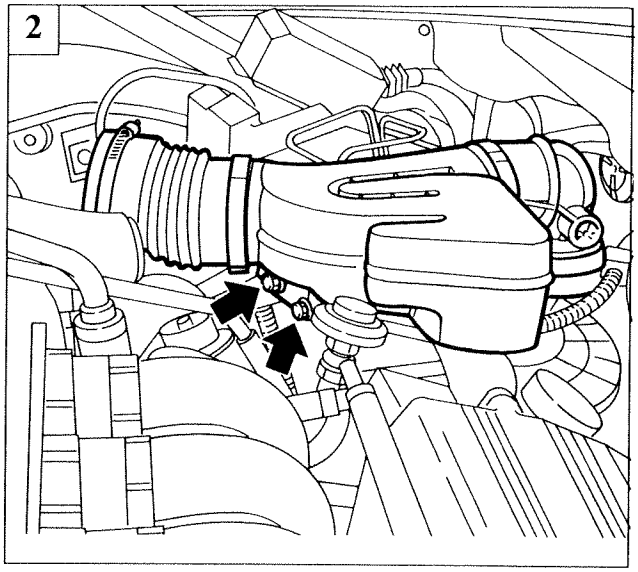

P3U02BB02

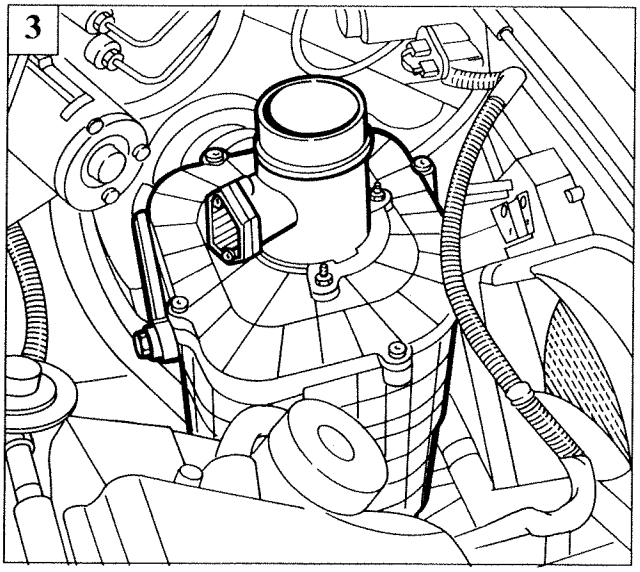

P3U02BB03

1. disconnect the wiring connections from the flowmeter and air temperature sensor, then undo the clips (arrowed) at the two ends of the pipe;
2. undo the bolts (arrowed) and remove the inlet pipe complete with mounting bracket;
3. remove the air cleaner;
4. undo the bolts on the exhaust manifold heat shield and remove it;
5. heat shield;

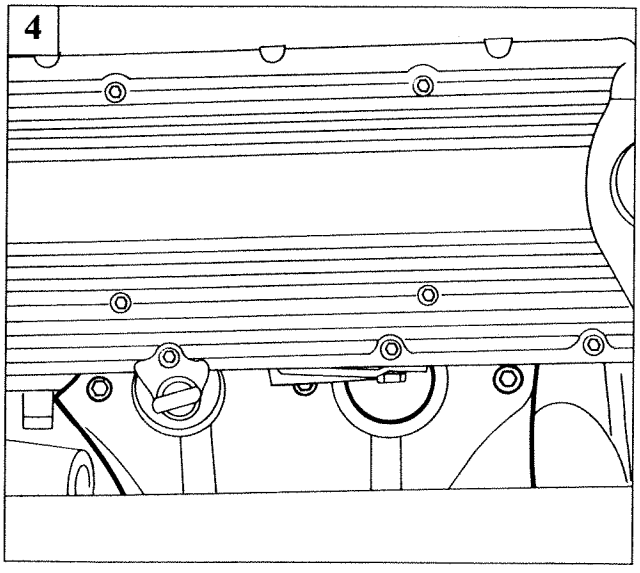

P3U02BB04

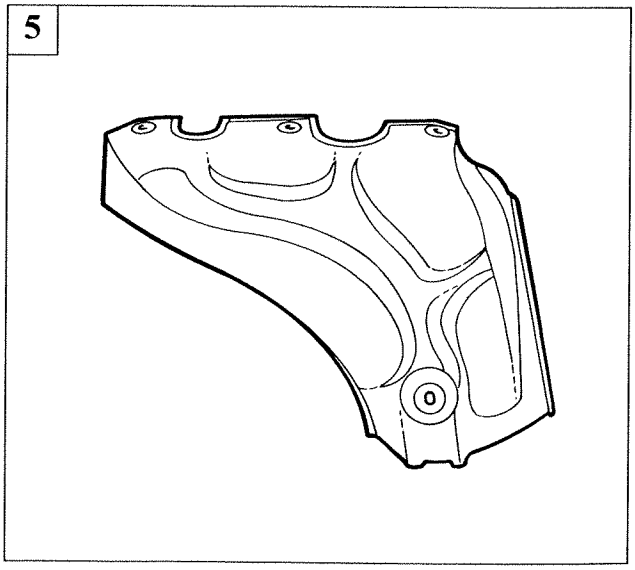

P3U02BB05

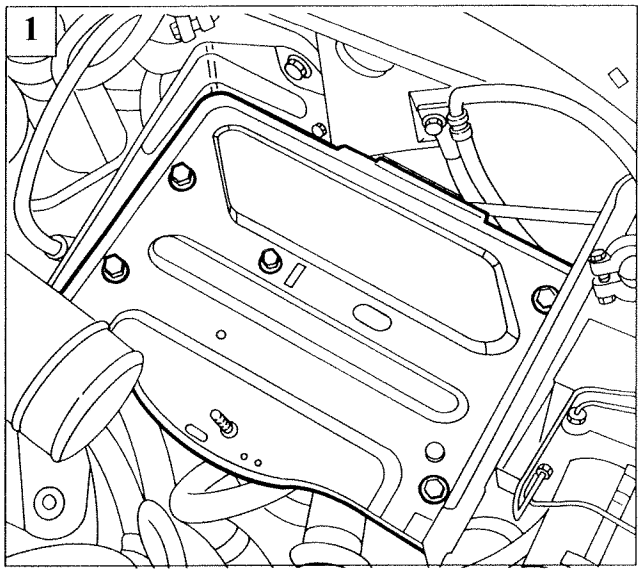

P3U03BB01

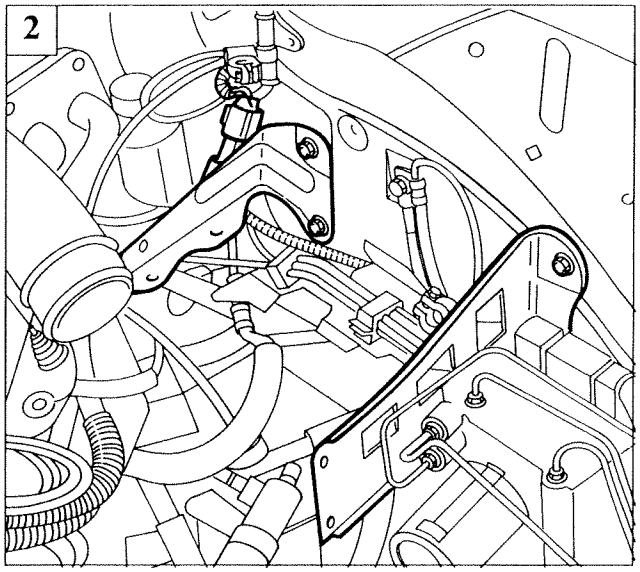

P3U03BB02

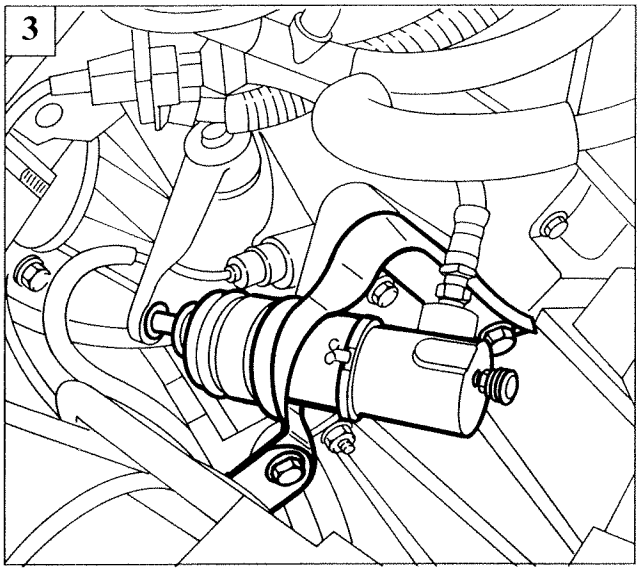

P3U03BB03

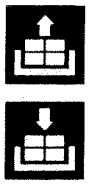

1. remove the plastic trim and then remove the battery cage;
2. disconnect the wiring connection, then remove the side mountings;
3. release the clutch cylinder from its mounting bracket and place it over to one side;
4. disconnect the reversing lights switch wiring connection and the reverse gear inhibition cable;
5. undo the nut on the connector on the E.G.R. valve pipe;

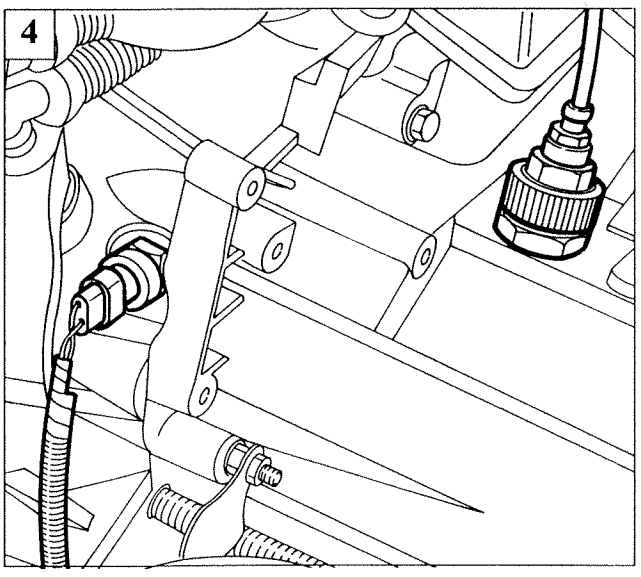

P3U03BB04

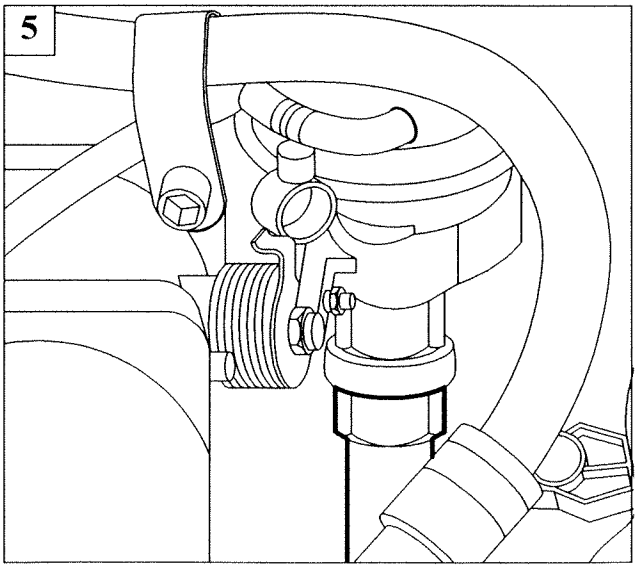

P3U03BB05

Copyright Fiat Auto

21-27.

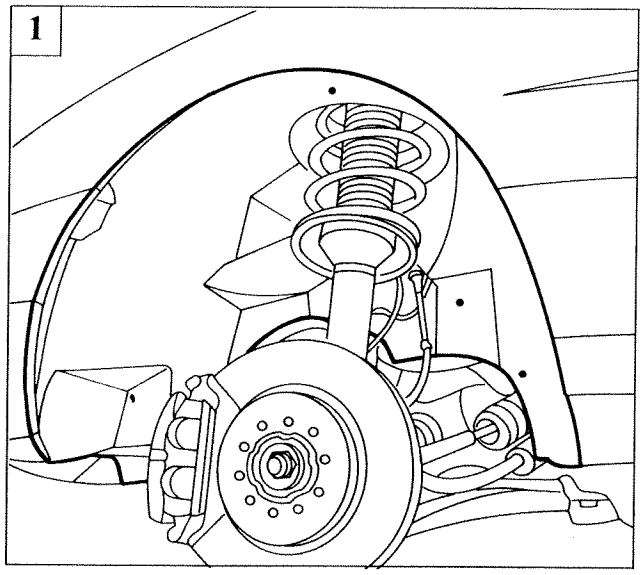

P3U03CB04

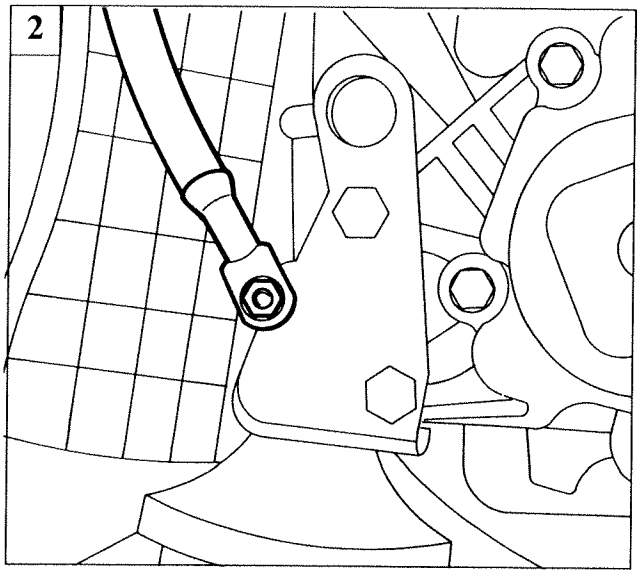

P3U03CB05

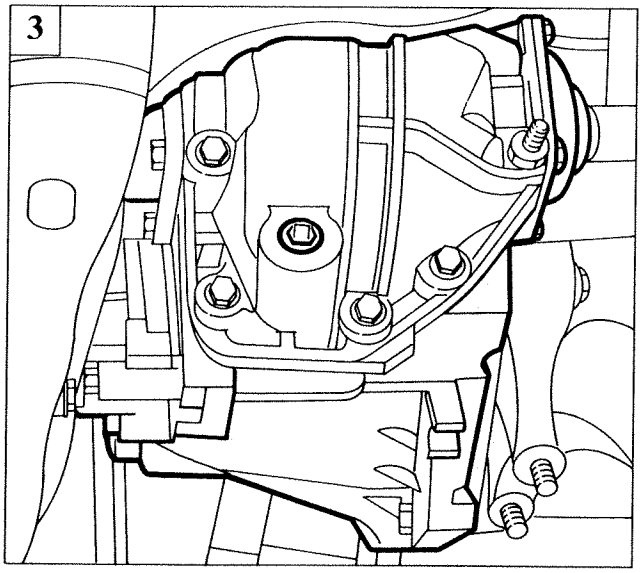

P3U04CB01

1. remove the left wheelarch by undoing the parts indicated;
2. disconnect the earth cable from the engine mounting, gearbox side;
3. drain the oil from the gearbox-differential unit;
4. undo the nut securing the track-rod end pin to the vertical link;
5. use tool 1847035000 to prise off the track rod end pin from the vertical link;

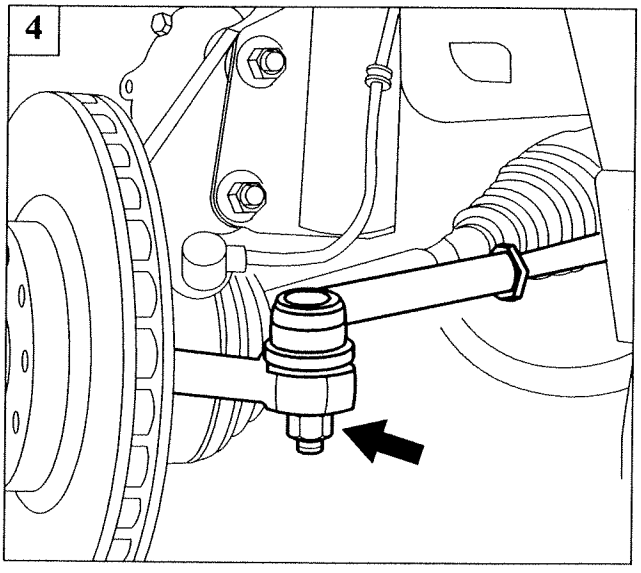

P3U04CB02

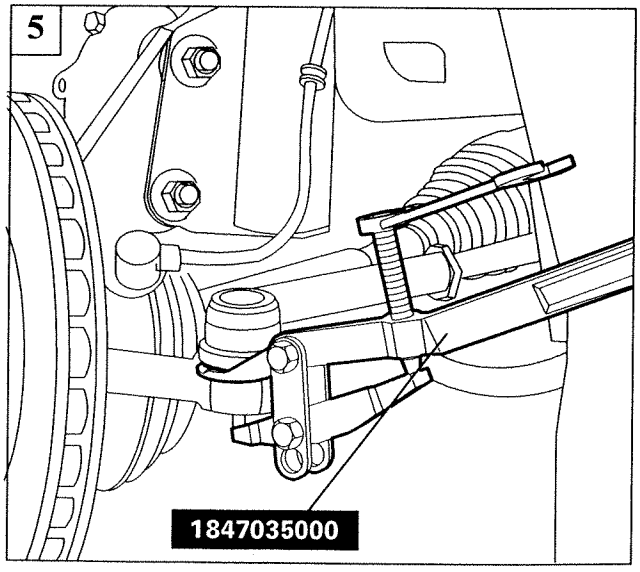

P3U04CB03

1

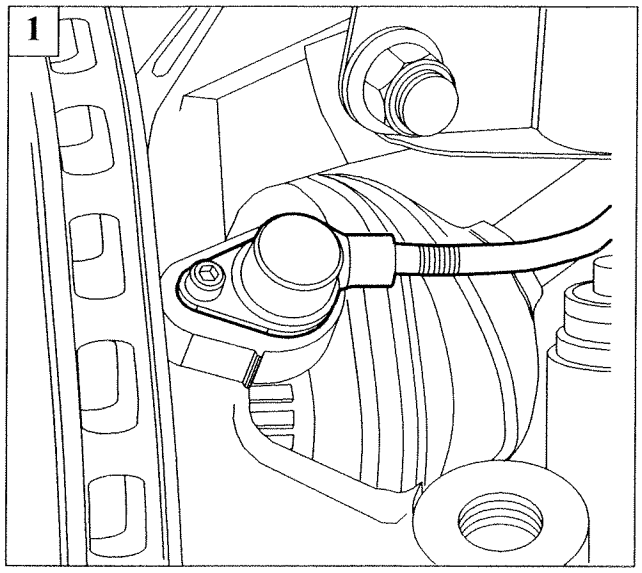

P3U04CB04

2

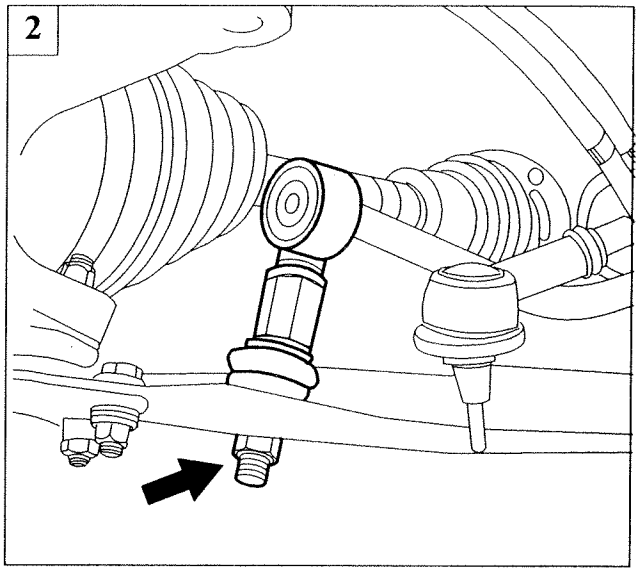

P3U04CB05

3

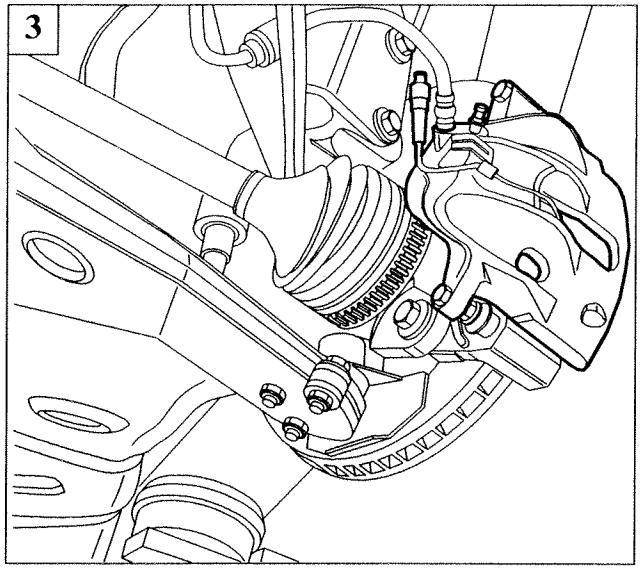

P3U05CB01

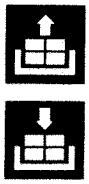

1. undo the bolt securing the wheel speed sensor to the vertical link;
2. undo the nut securing the connecting link to the wishbone;
3. disconnect the brake pad wear sensor, undo the bolts securing the brake caliper and separate it from the caliper carrier, securing it as appropriate in the wheelarch;
4. undo the bolts securing the wishbone to the balljoint head;
5. disconnect the left drive shaft coupling by undoing the bolts indicated;

4

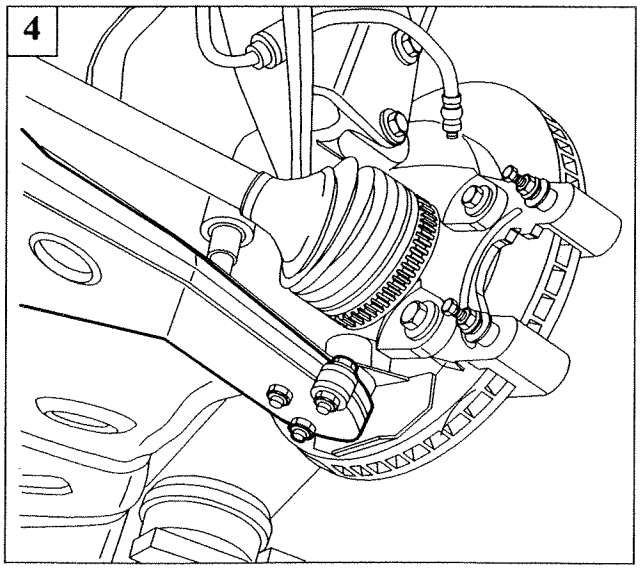

P3U05CB02

5

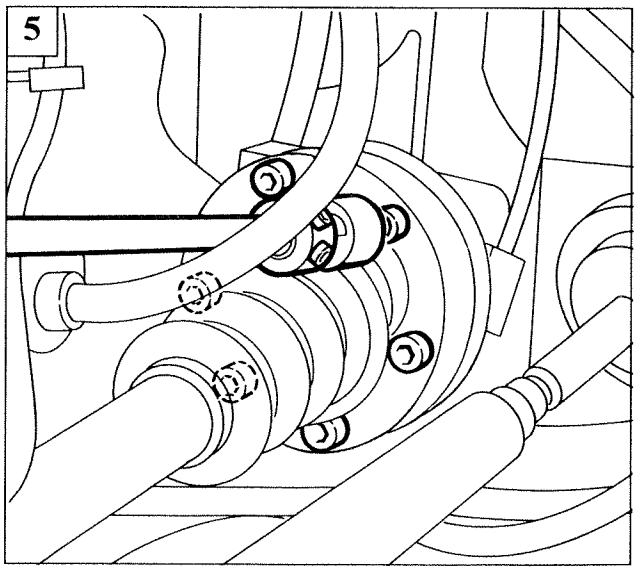

P3U05CB03

Copyright Fiat Auto

1

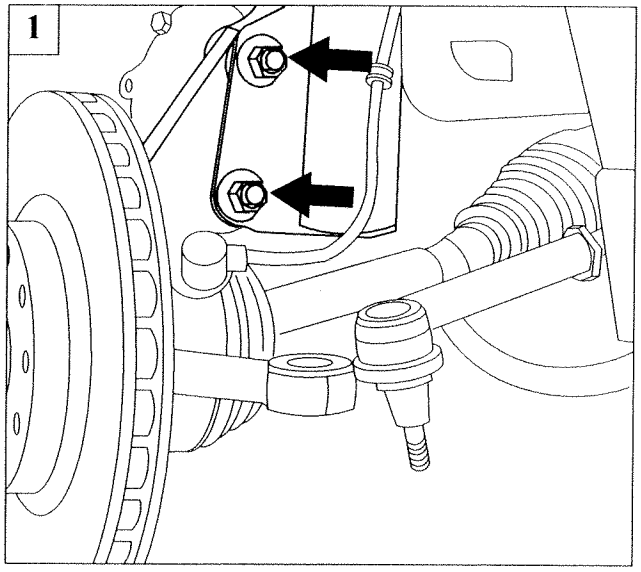

P3U05CB04

2

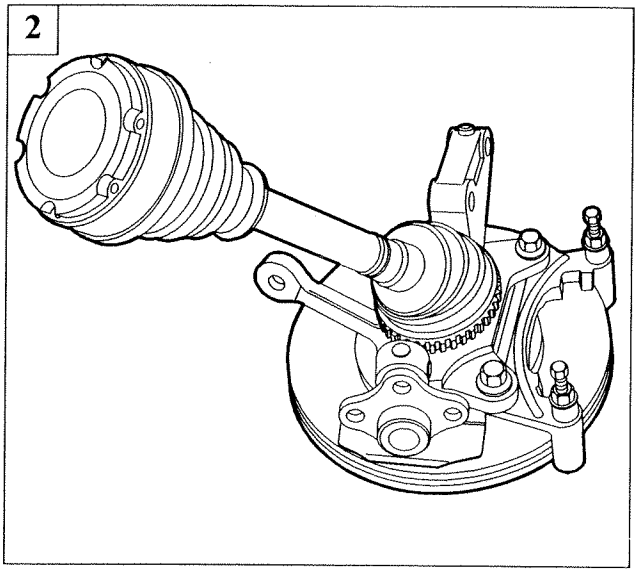

P3U05CB05

3

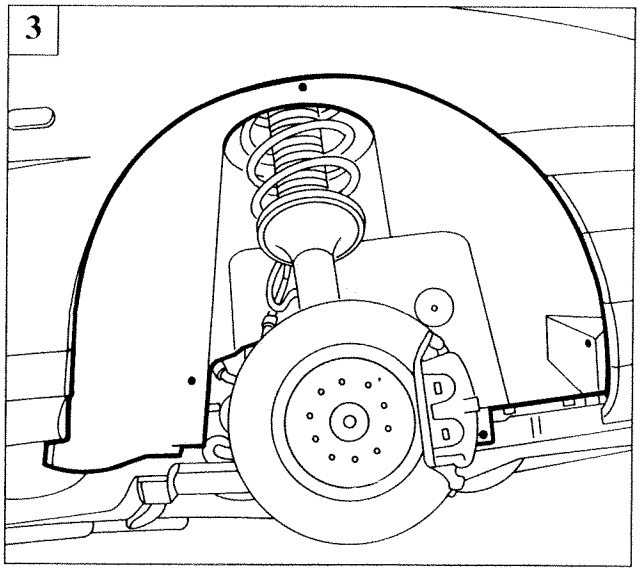

P3U06CB01

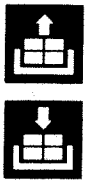

1. undo the bolts securing the shock absorber to the vertical link;
2. withdraw the left drive shaft complete with vertical link and brake disc;
3. remove the right wheel arch (two parts) by releasing its attachments;
4. undo the nut securing the connecting link to the wishbone;
5. disconnect the right drive shaft coupling by undoing the bolts indicated, then push it aside towards the rear of the engine compartment;

4

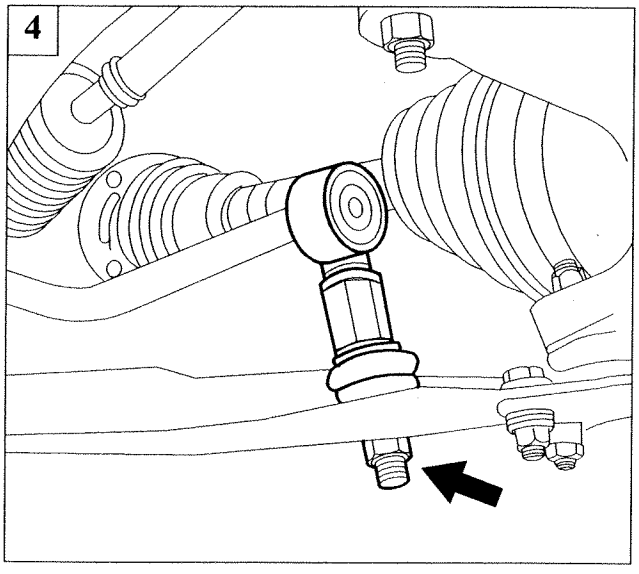

P3U06CB02

5

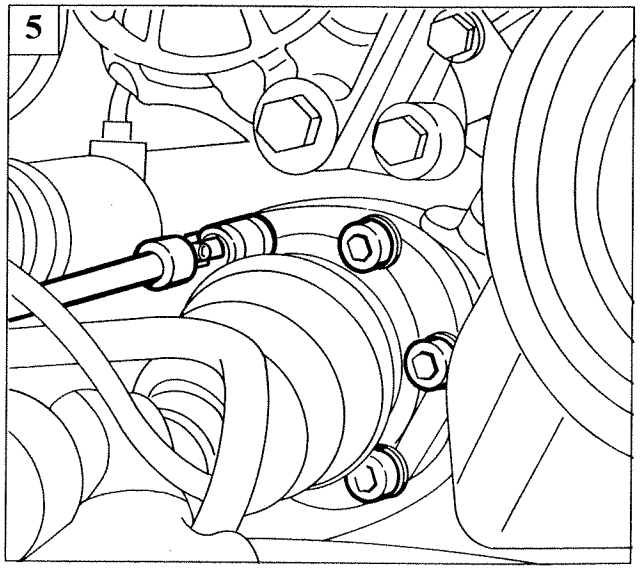

P3U06CB03

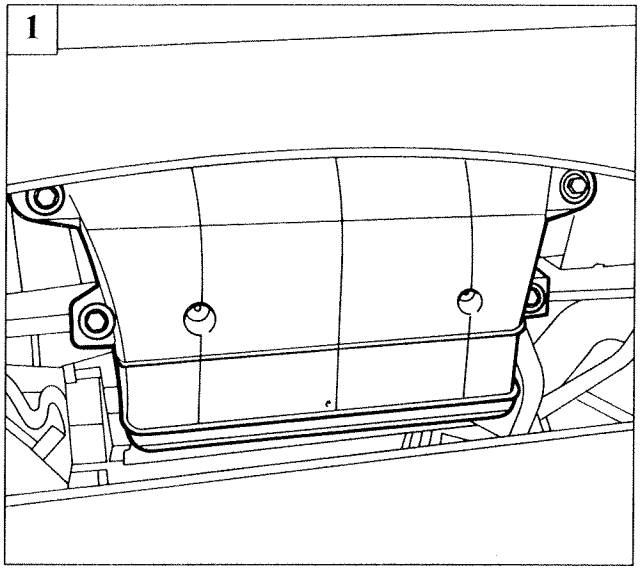

P3U07BB01

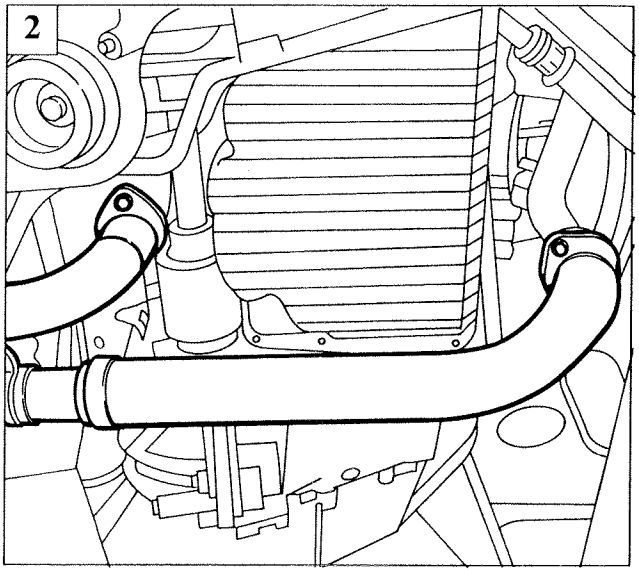

P3U07BB02

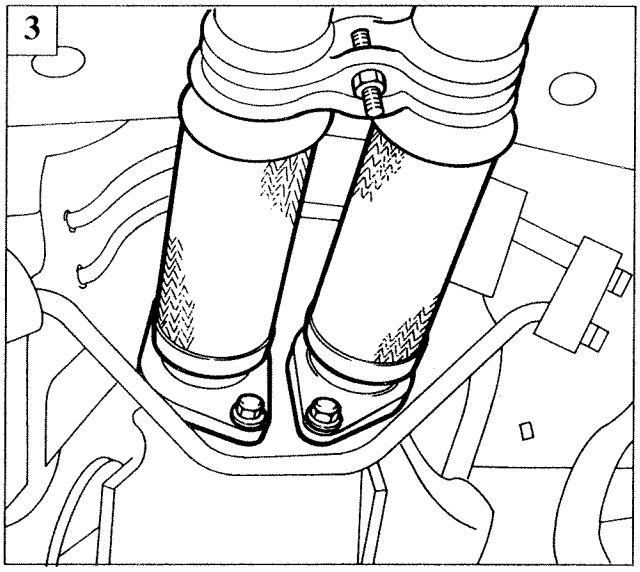

P3U07BB03

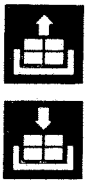

1. raise the ramps and remove the air duct;
2. undo the bolts securing the front sections of the exhaust pipes to the manifolds;
3. undo the bolts securing the front sections of the exhaust pipes to the catalyser and remove them;
4. undo the bolts securing the heat shield and remove it;
5. disconnect and remove the E.G.R. valve pipe;

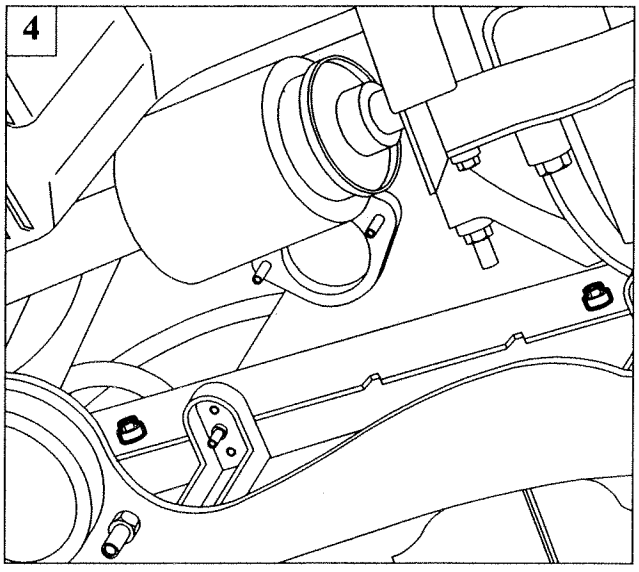

P3U07BB04

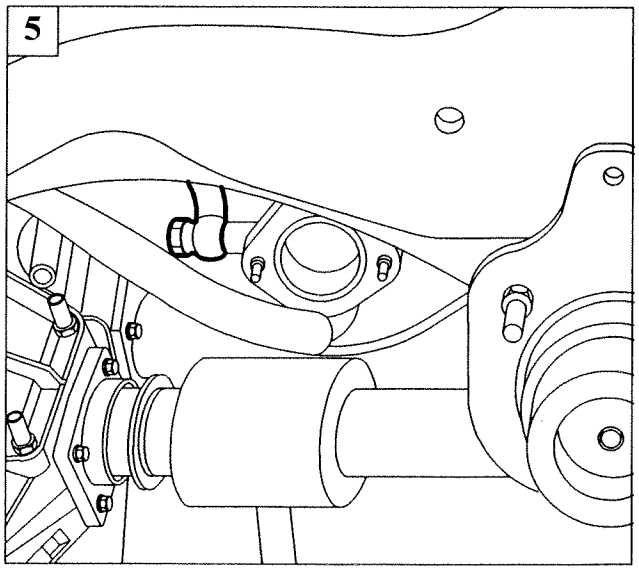

P3U07BB05

Copyright Fiat Auto

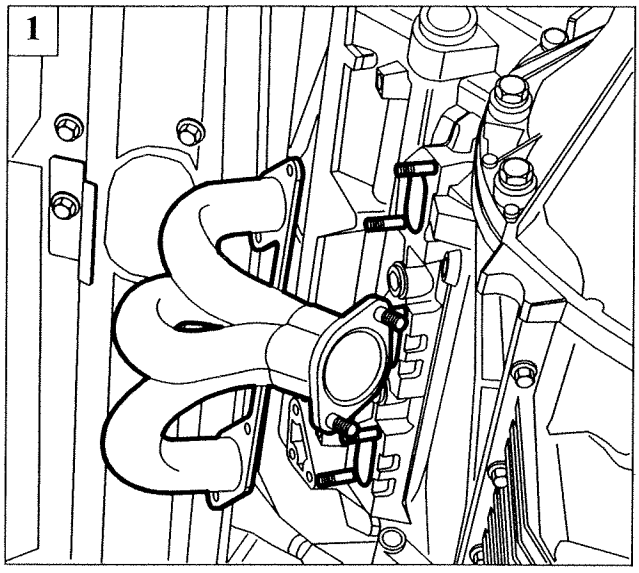

P3U08BB01

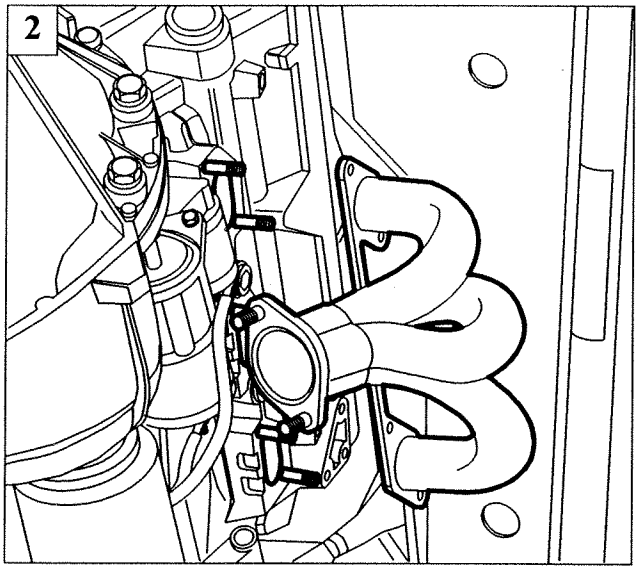

P3U08BB02

1. undo the attachment bolts and secure the front exhaust manifold;
2. undo the attachment bolts and remove the rear exhaust manifold;
3. undo the bolts securing the flywheel cover and remove it;
4. disconnect the two gearbox control levers;

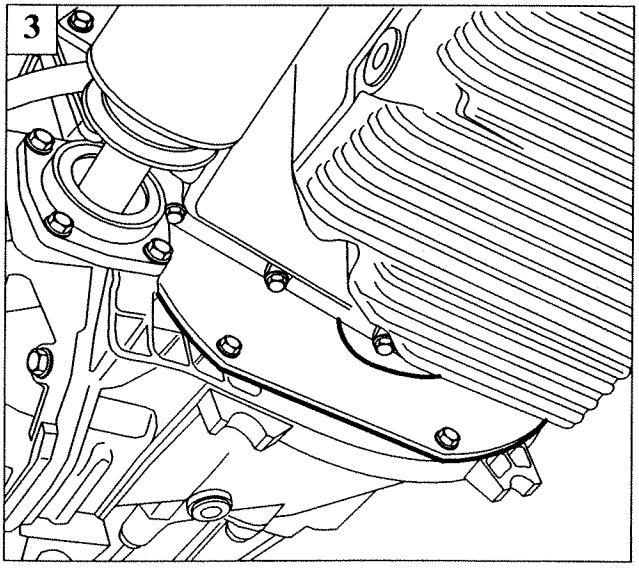

P3U08BB03

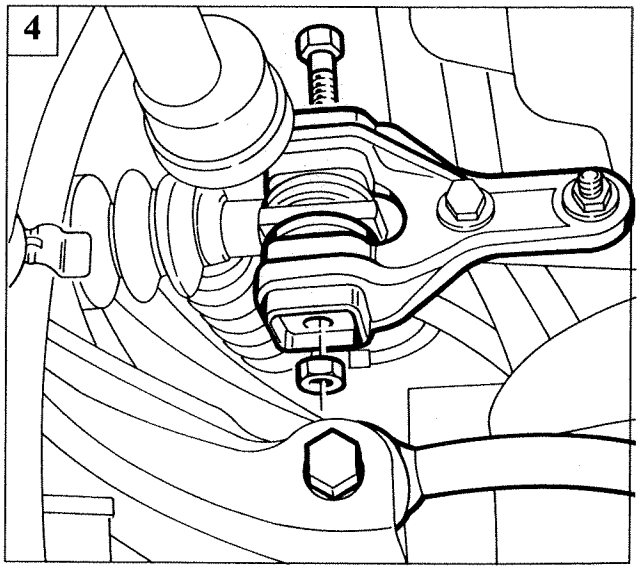

P3U07CB02

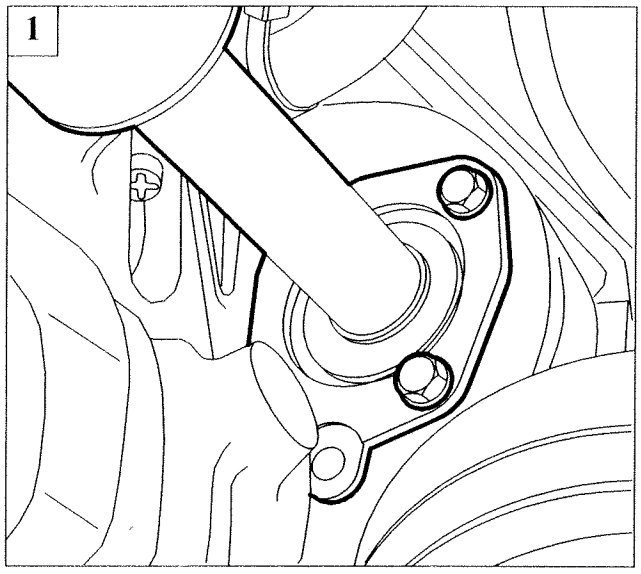

P3U09BB01

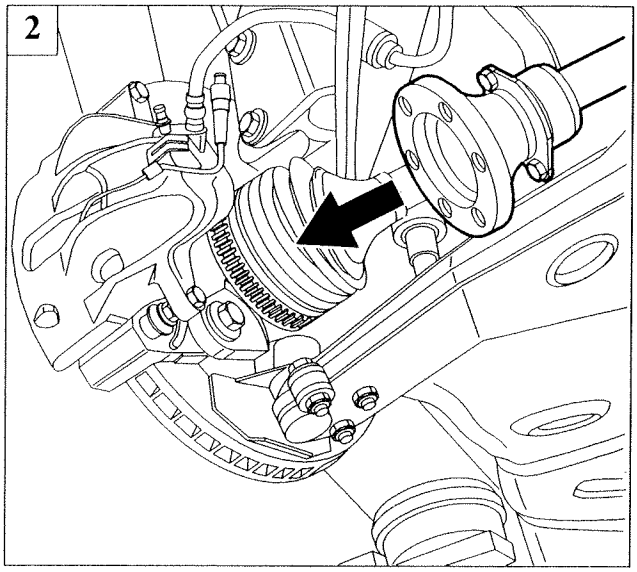

P3U06CB05

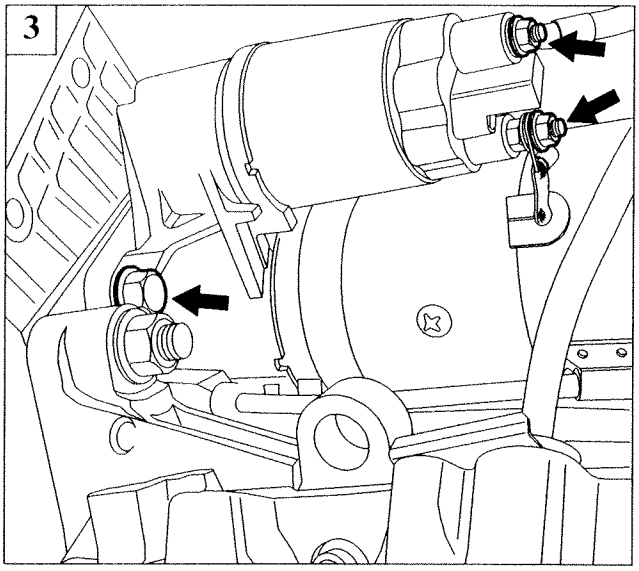

P3U07CB01

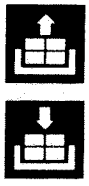

1. undo the bolts securing the intermediate shaft;
2. withdraw the intermediate shaft from the differential;
3. disconnect the starter motor supply cables then undo the bolts securing the starter motor to the gearbox-differential unit and remove it;
4. undo the nut on the rear right mounting block in order to be able to move the engine and so withdraw the gearbox-differential unit;
5. disconnect the connector on the vehicle speed sensor;

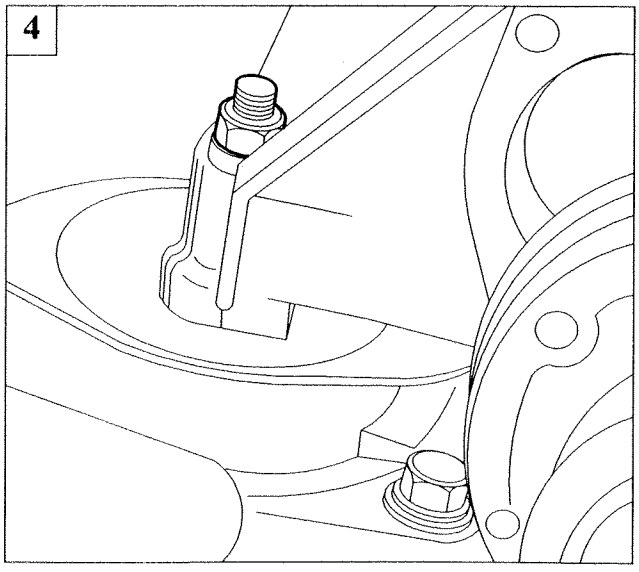

P3U10CB05

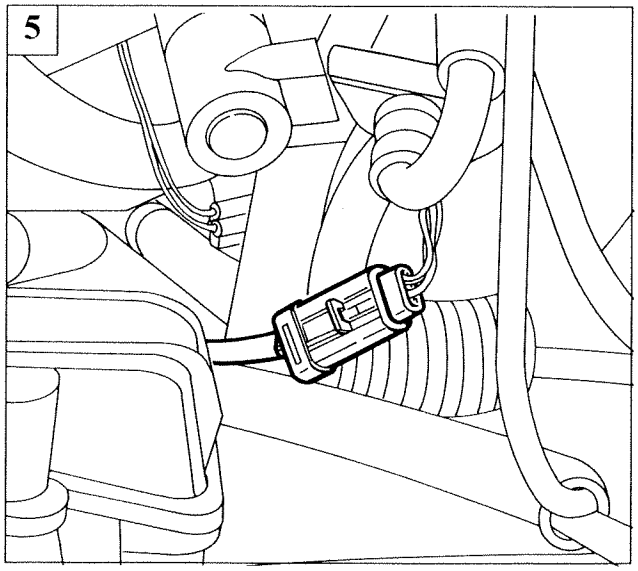

P3U10CB03

Copyright Fiat Auto

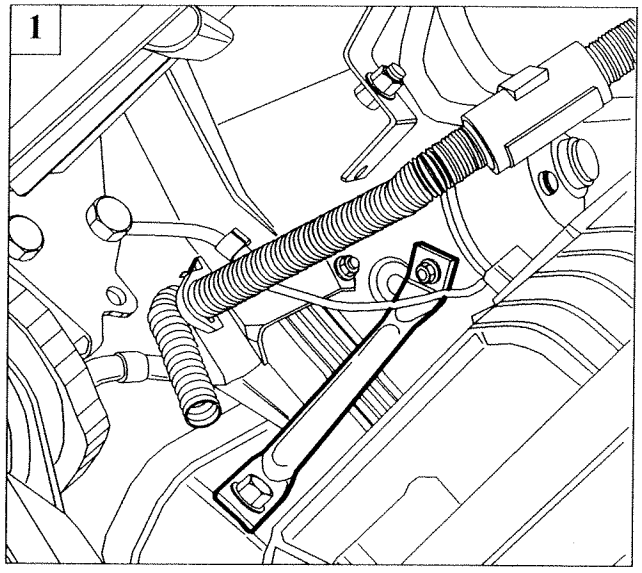

P3U07CB05

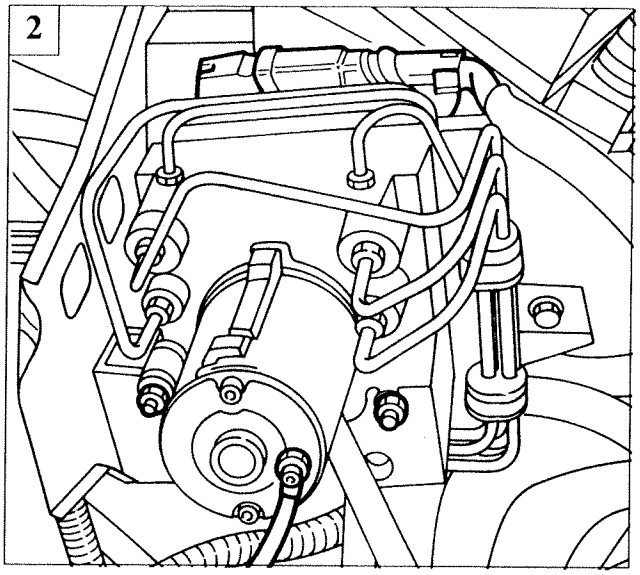

P3U08CB02

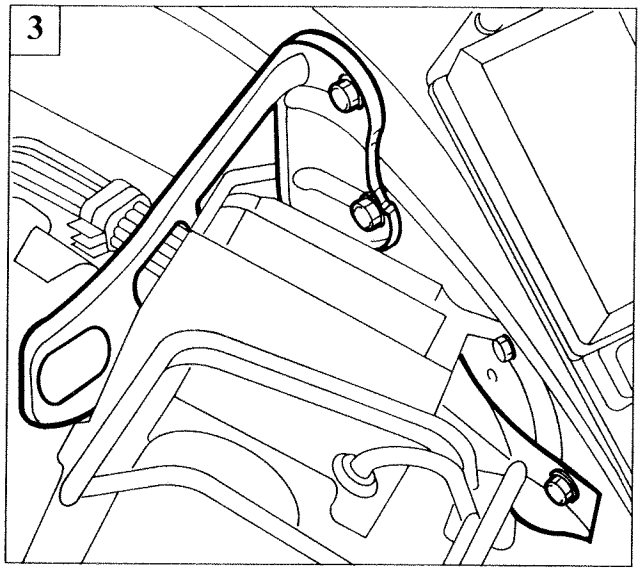

P3U08CB03

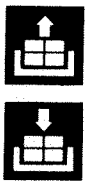

1. undo the nuts securing the ABS hydraulic control unit to the bracket (and its bottom attachment);
2. disconnect the wiring connection and the earth cable, and remove the ABS control unit from its mounting bracket;
3. undo the bolts securing the ABS electrohydraulic unit mounting bracket to the chassis and detach it;
4. undo the bolt securing the brake fluid pipes;
5. move aside the ABS electrohydraulic control unit and secure it outside the workinig area, taking care not to damage the pipes;

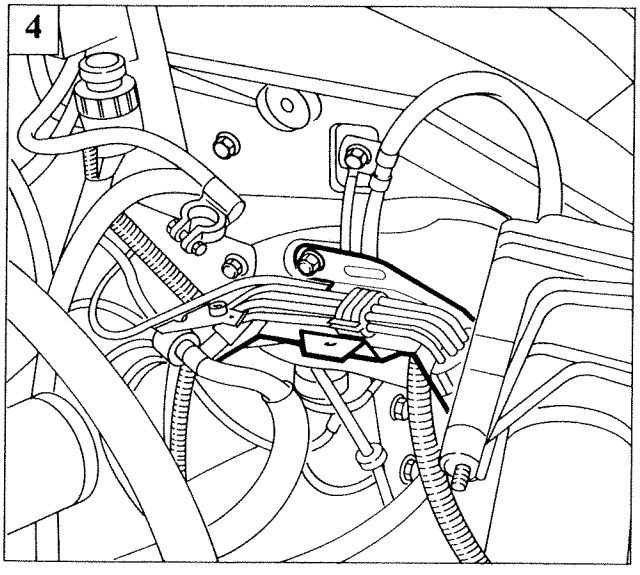

P3U08CB04

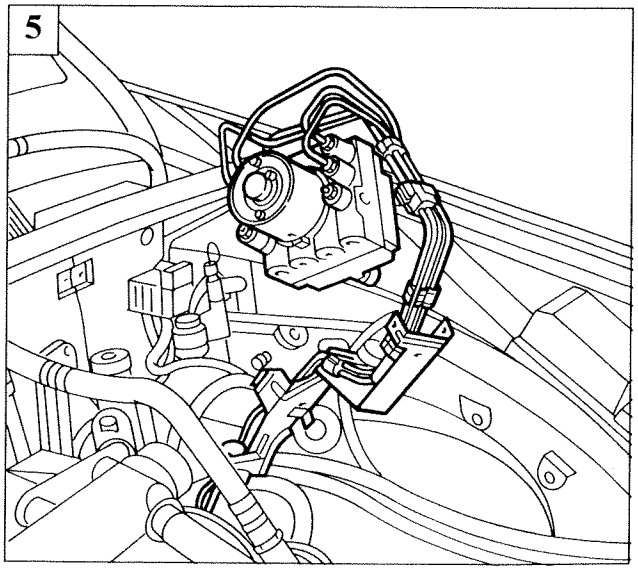

P3U08CB05

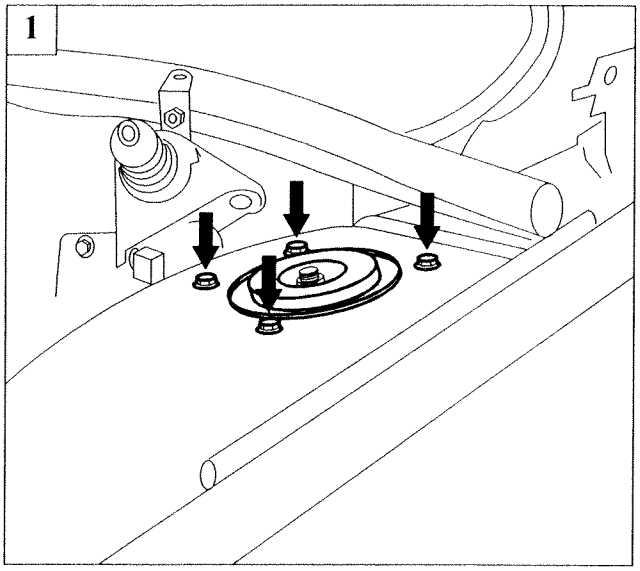

P3U09CB01

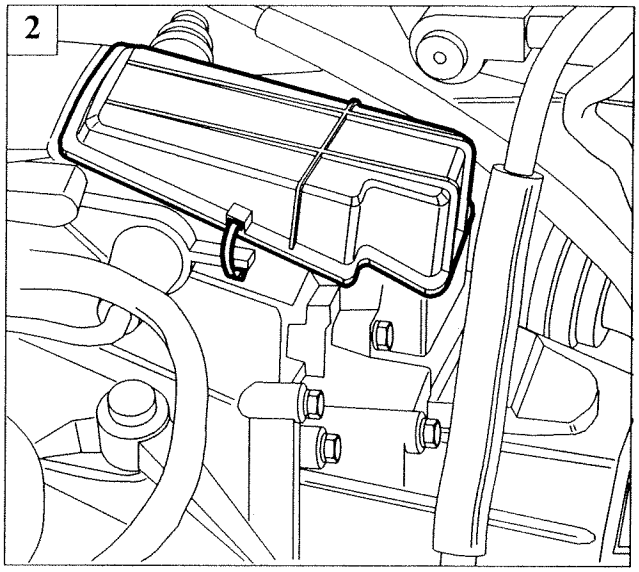

P3U11BB01

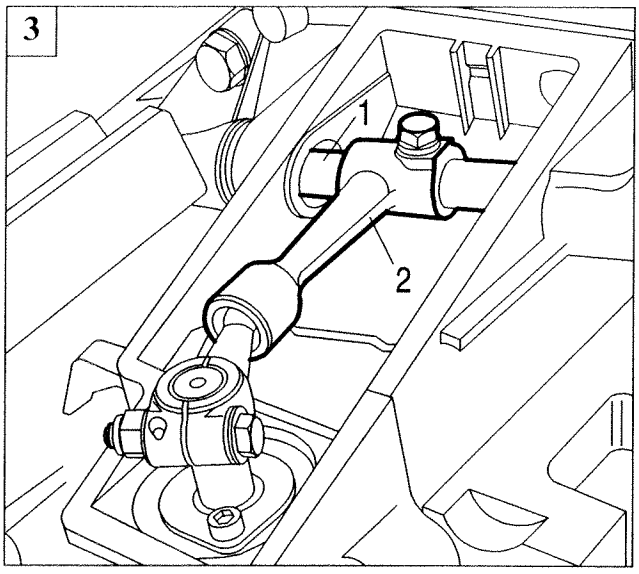

P3U11BB02

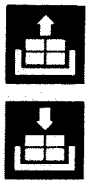

1. undo the bolts securing the shock absorber to the chassis and remove it;
2. remove the keys and take off the gearbox control lever cover;
3. undo the bolt on the gearbox lever, withdraw the shaft (1) and remove the lever (2);
4. remove the bolt securing the gearbox-differential unit to the engine;
5. position the crossbeam 1870595000 over the engine compartment;

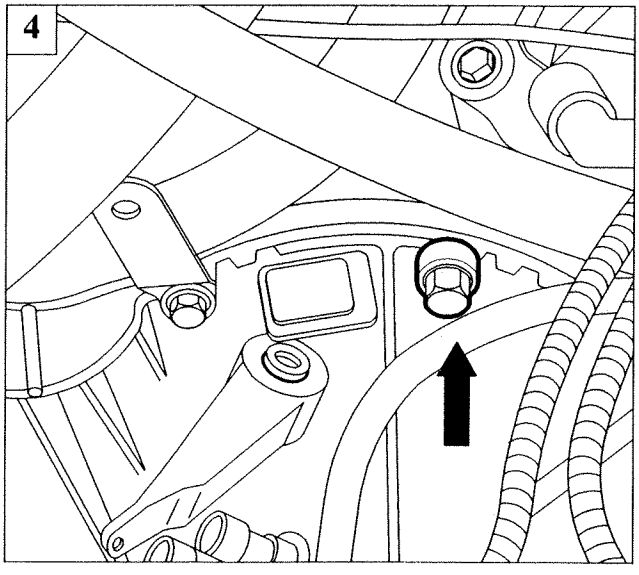

P3U11BB03

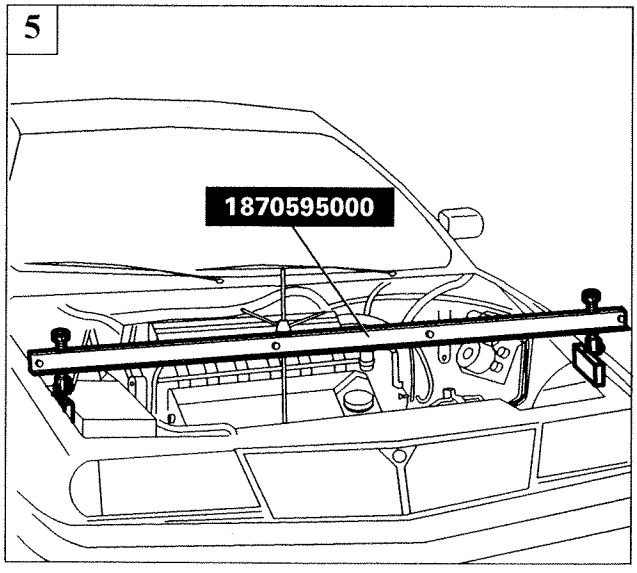

P3U11BB04

Copyright Fiat Auto

21-27.

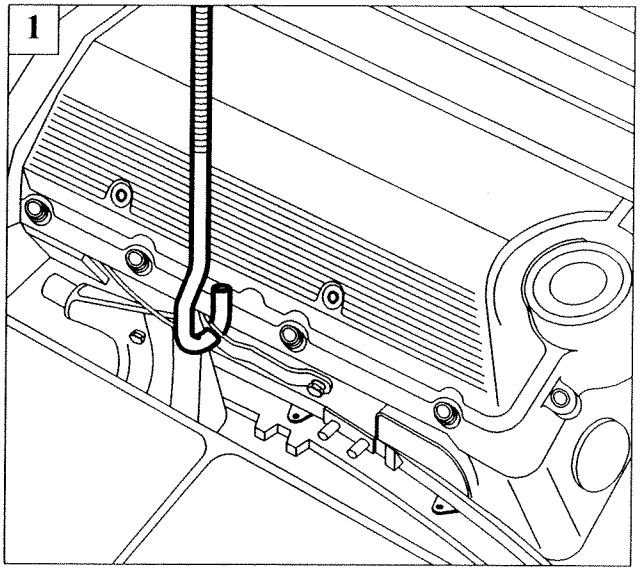

P3U12BB01

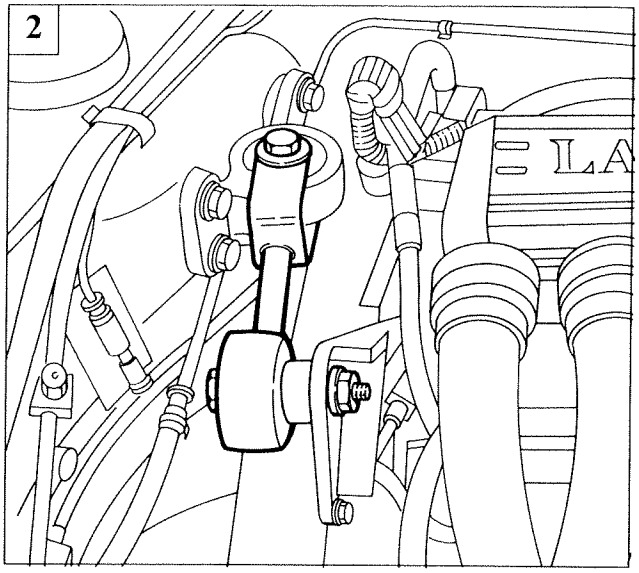

P3U12BB02

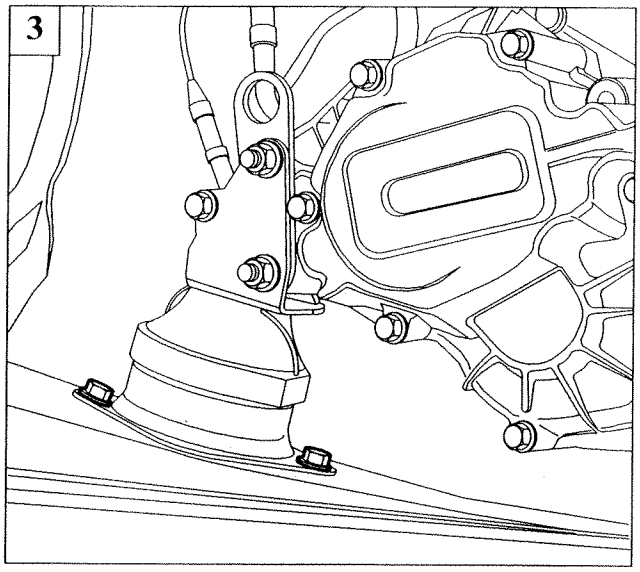

P3U10CB04

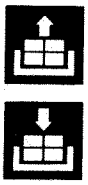

1. hook the crossbeam's adjustable support to the engine block and place it under slight tension;
2. remove the reaction link;
3. undo the bolts securing the engine bottom mounting (gearbox side) to the skid;
4. slightly raise the engine using the crossbeam's adjustable support, then undo the bolts securing the engine mounting to the gearbox and remove it;
5. secure the support tool 1870600000 to the gearbox, placing it on the column-type jack;

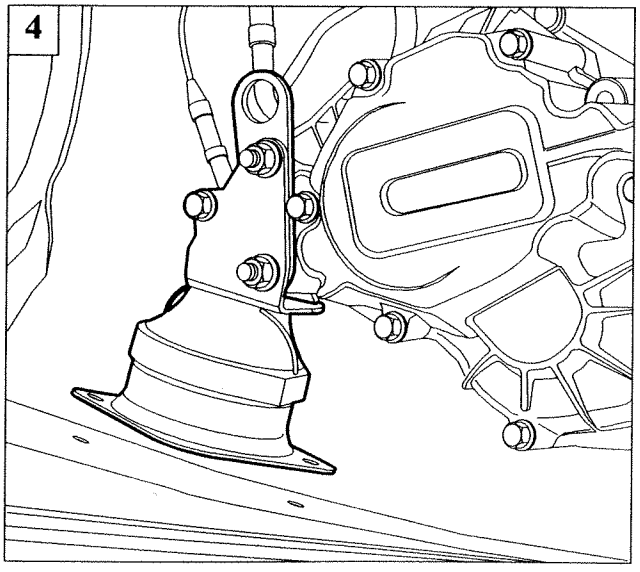

P3U11CB01

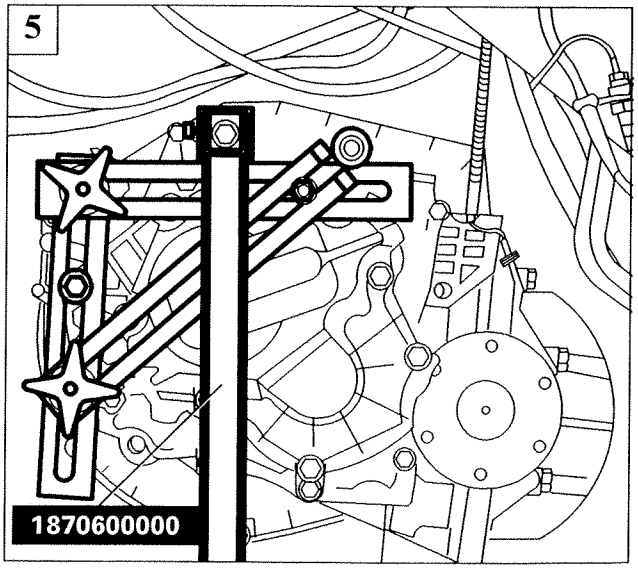

P3U12BB03

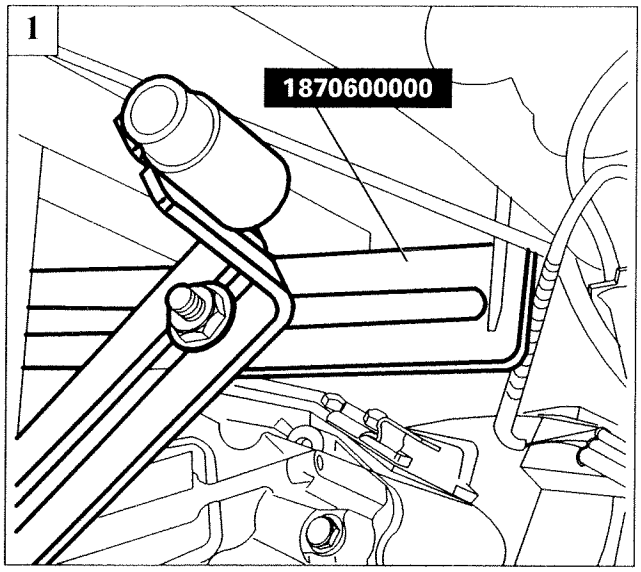

P3U13BB01

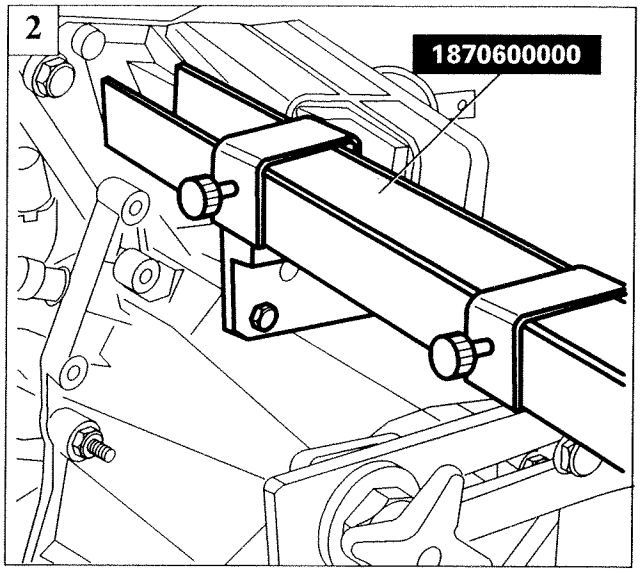

P3U13BB02

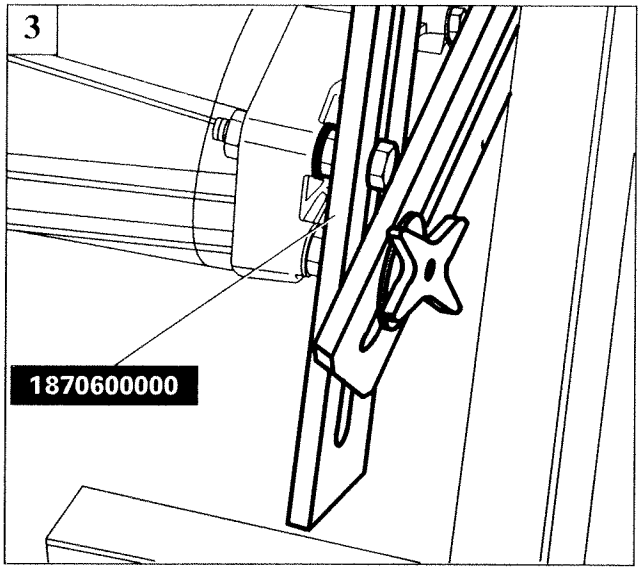

P3U13BB03

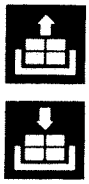

1. connect the brackets of tool 1870600000;
2. fit the C-bracket on the support locked onto the gearbox;
3. connect the bracket to the gearbox;
4. undo the front bolts securing the gearbox-differential unit to the engine;
5. manoeuvre the gearbox-differential unit to release it from the centring pins on the engine and to withdraw the main shaft from the clutch disc, then lower the hydraulic jack and withdraw the gearbox-differential unit, manoeuvring it in the direction shown by the arrow.

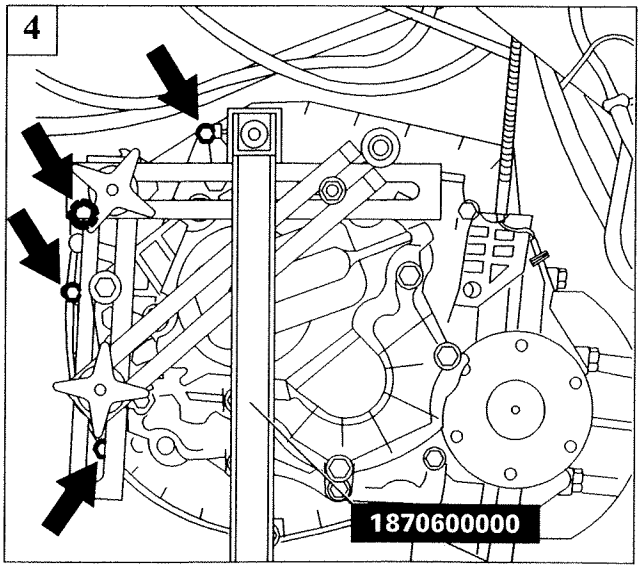

P3U13BB04

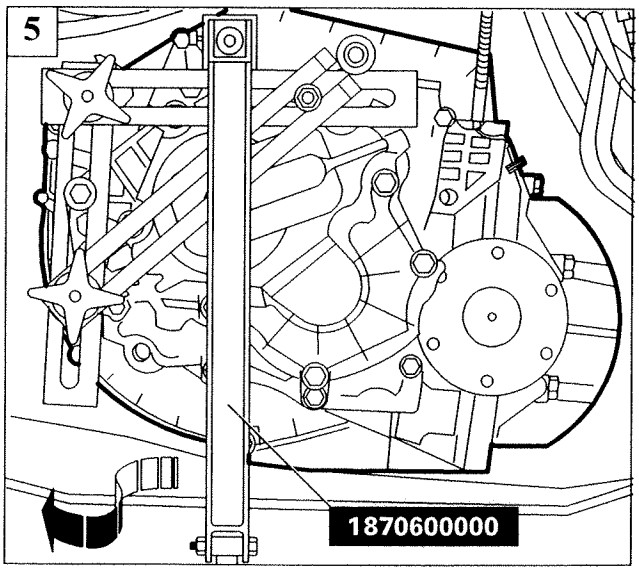

P3U13BB05

Copyright Fiat Auto

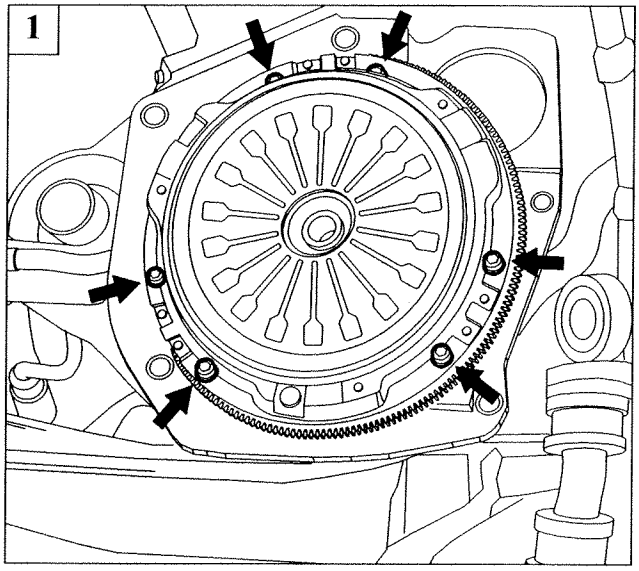

P3U13CB01

REFITTING

Before refitting the gearbox-differential unit by reversing the procedure for removal, the clutch release bearing must be withdrawn from the clutch spring and repositioned in the release fork, as described below:

1. remove the clutch assembly;

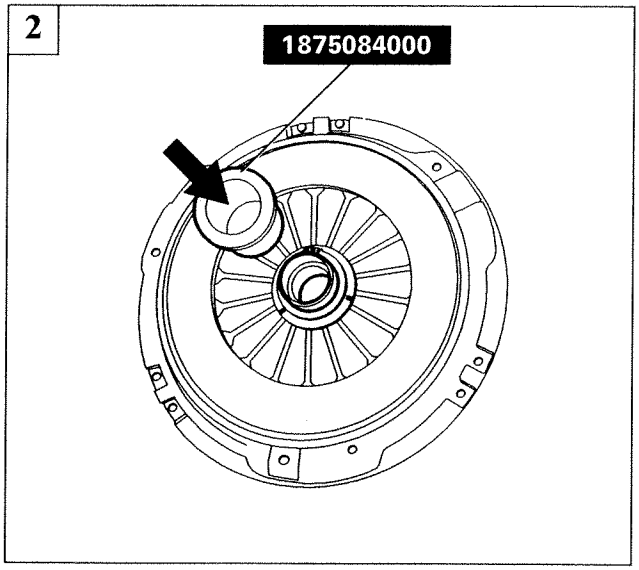

P3U13CB02

2. use the tool 1875084000 and remove the clutch release bearing from the clutch spring;

The bearing must not be noisy or have tight spots, otherwise it will have to be replaced.

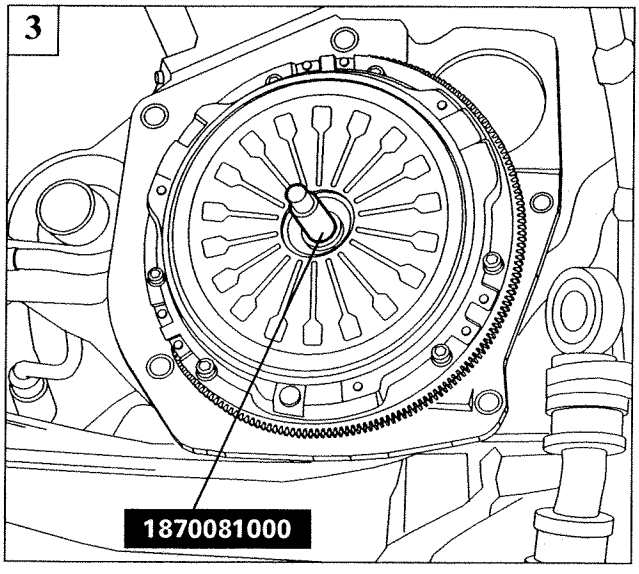

P3U13CB03

3. use the centring pin 1870081000 to align the driven plate and then fit the clutch assembly;

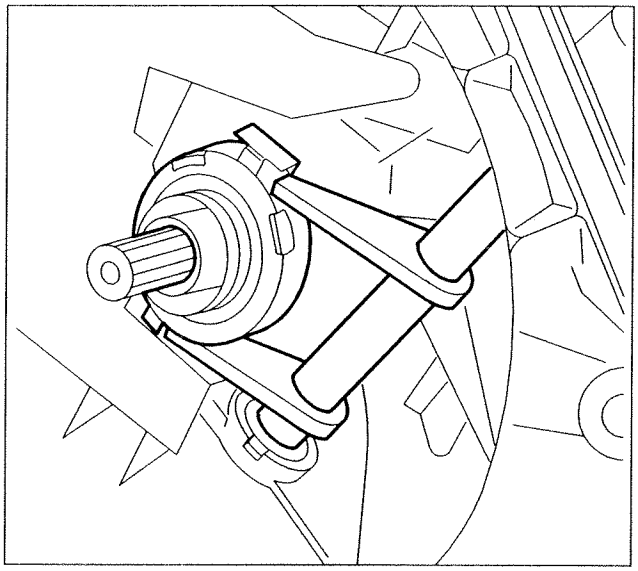

P3U14CB01

Fitting clutch release bearing on the sleeve of the gearbox main shaft

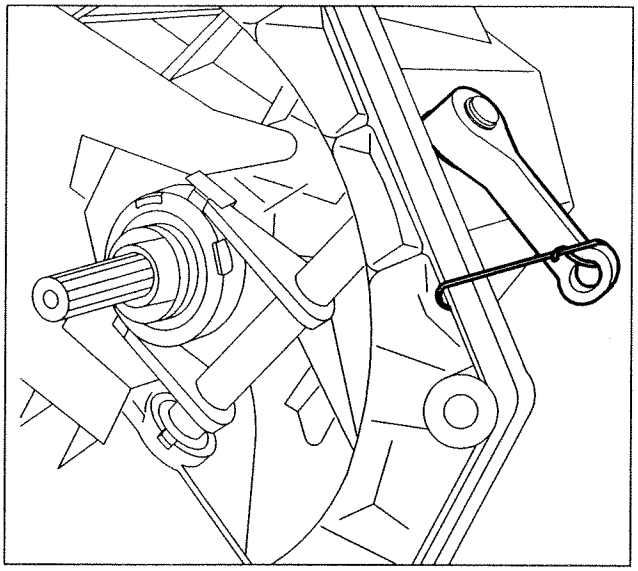

P3U14CB02

NOTE *To refit the gearbox-differential unit to the engine, secure the clutch release lever, making sure that it is positioned as shown in the figure.*

Securing clutch release lever

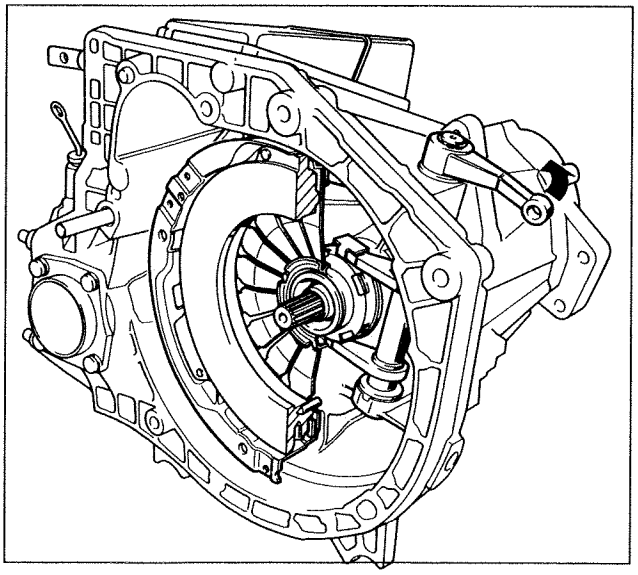

P3U14CB03

NOTE *After refitting, push the clutch release lever hard in the direction of the arrow, in order to engage the clutch release bearing on the clutch spring.*

Fitting clutch release bearing in its seating

Copyright Fiat Auto

21-27.

INTRODUCTION

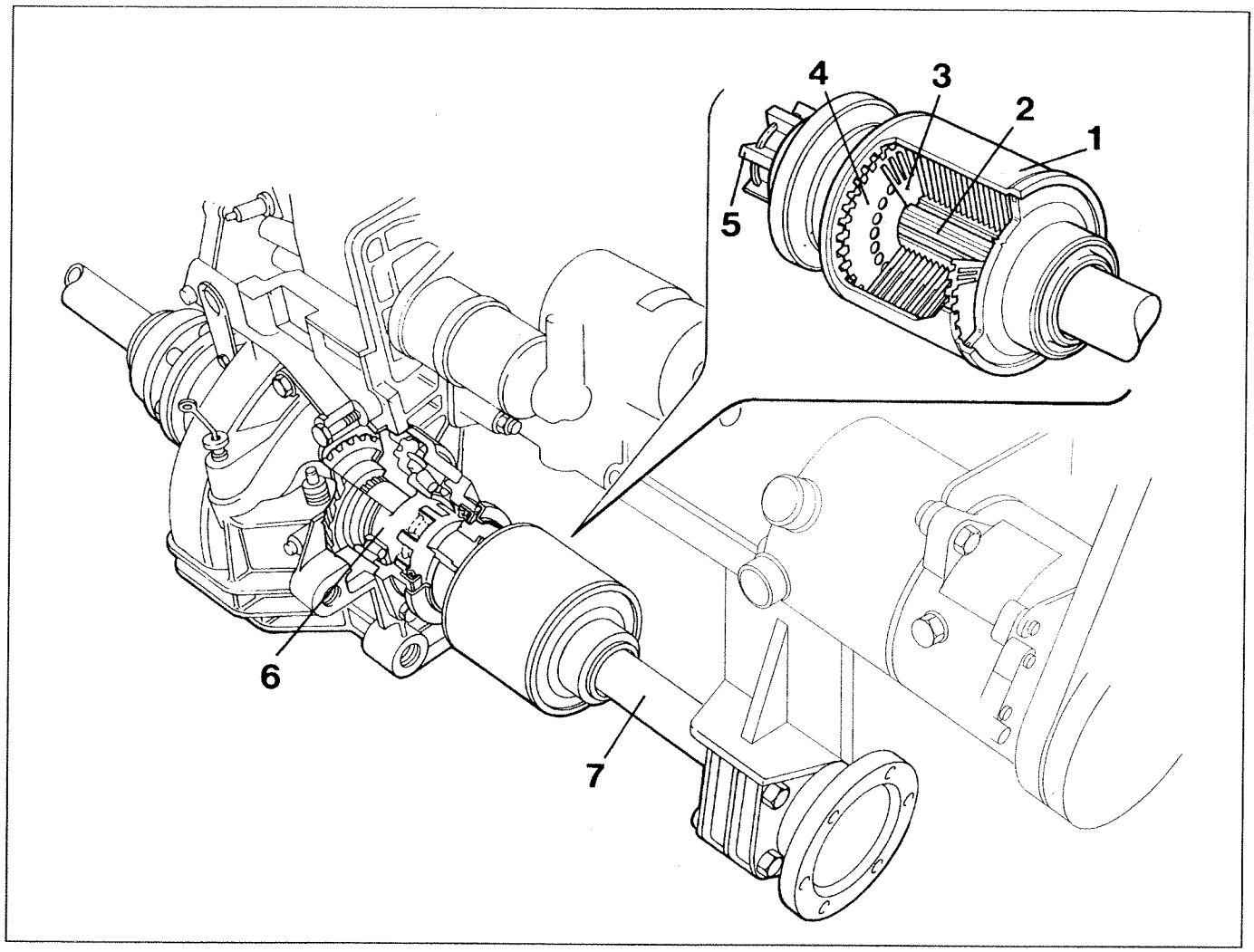

P3U16BB01

The Lancia k with 1995 16v turbo and 2959 24v engines are fitted with the "Viscodrive" viscous coupling on the right gearbox output.

It consists of:

1. Outer casing
2. Inner hub
3. Set of discs fitted on the inner hub
4. Set of discs fitted on the outer casing
5. Front connection

The outer part (1) connects to the differential casing (6) by means of a front connection (5), while the inner part connects to the intermediate shaft (7) by inner splines.
The purpose of the "Viscodrive" viscous coupling is to limit slipping of one wheel in relation to the other and at the same time to transfer part of the torque of the slipping wheel to that which is gripping well.
The coupling is filled with a special silicone-based, highly viscous fluid.
The viscous coupling has the advantage of always being in operation, without manual intervention, and of not transmitting undesirable stresses to the various transmission components.

This coupling does not require maintenance and cannot be overhauled; if it is faulty, it must be renewed.

OPERATION

The casing (1) and the discs (4) fitted onto the latter receive the drive via the spur-toothed connection (5) from the differential (6).
The hub (2) and the discs (3) fitted onto the latter receive drive from the intermediate shaft (7).
When the two wheels are travelling at the same speed, everything inside the viscous coupling is turning at the same speed. When the wheels turn at different speeds (difference in grip), the relevant discs (3 and 4) assume different speeds, but are braked by the viscous fluid which limits the slip between them and consequently between the wheels. So when the discs (3 and 4) are at different speeds, the viscous fluid is "cut", i.e. subjected to a cutting force. This force increases as the difference in speed of rotation between the wheels increases. The cutting force, acting on discs facing each other, creates a significant increase in torque on the wheel which is turning at slower speed (usually the wheel with better grip), providing benefits in terms of road holding and stability.

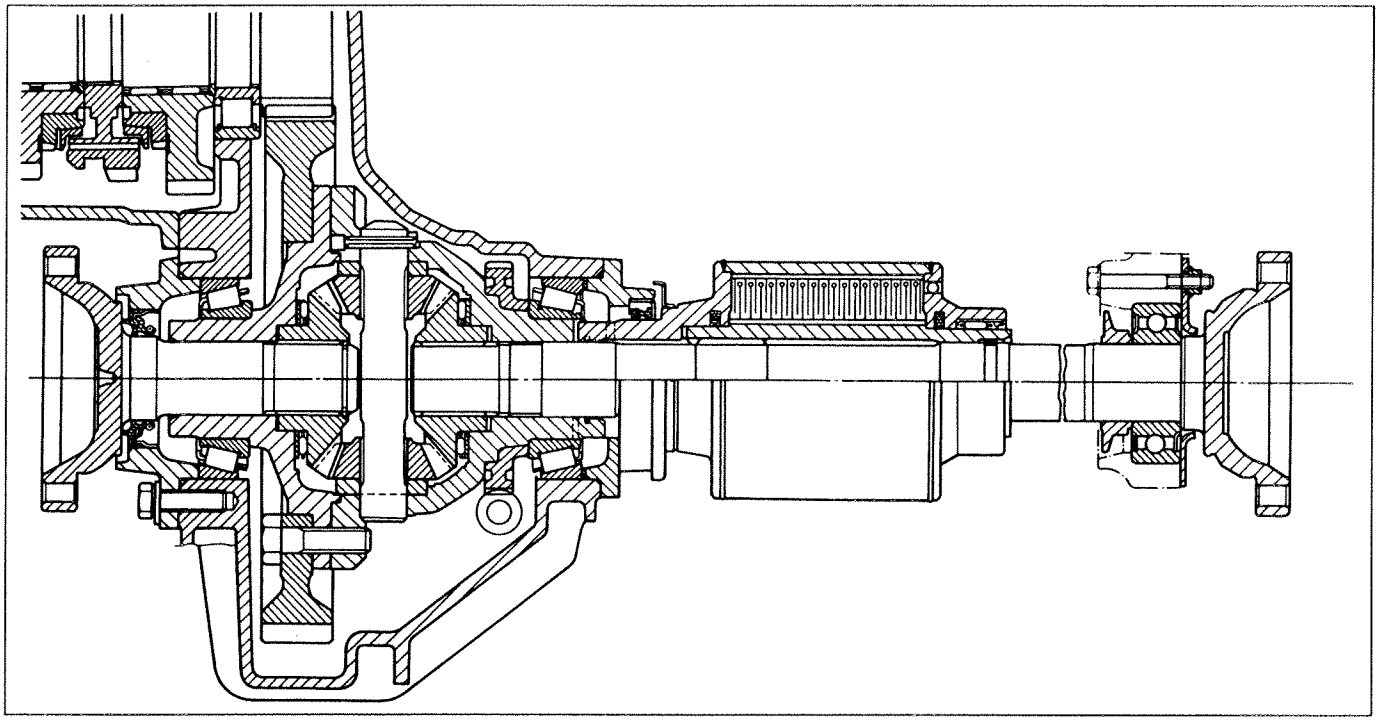

P3U17BB01

Even with small slips, the torque passing through the viscous coupling (i.e. the torque which the viscous coupling takes from the faster wheel and gives to the slower wheel) is high.
On a bend, where the difference in rotation between the wheels is relatively low, the viscous coupling permits relative slipping of the internal discs without impairing normal operation of the differential.
The viscous coupling can go as far as locking, i.e. it can transmit very high torques with no slip. In other words, very high torque can pass through the viscous coupling, taken from the faster wheel and given to the slower wheel, even with no slipping.
This happens when, turning for a long time with high slipping, the heat produced increases the temperature of the viscous fluid considerably (150° - 200°C).
The air present in the viscous coupling is emulsified with the fluid, it causes an increase in pressure (about 90 bar) and also causes a sudden change in the characteristics of the viscous coupling and so making relative slipping between the discs impossible.
The viscous coupling has been designed to withstand the above condition for short periods. If it is subjected to such a condition for prolonged periods because of very high stresses or faulty operation (such as ice or mud, so one wheel slips while the other is stopped or nearly stopped), the viscous coupling could be damaged.

The wheels must be balanced on the car by lifting both wheels off the ground, in order not to damage the "Viscodrive" viscous coupling.

Copyright Fiat Auto

Gearbox and differential

Contents

21-27.

page

REMOVING-REFITTING

- Removing 1
- Refitting 13

Copyright Fiat Auto

COPYRIGHT Fiat Auto S.p.A.

Reproduction of all or part of the text and illustrations is prohibited.

The information in this publication is intended as a guide and could be superseded by modifications introduced by the Manufacturer at any time for technical and commercial reasons or in accordance with local regulations.

Fiat Auto S.p.A.
Direzione Marketing Commerciale
Direzione Post-Vendita - Servizi Assistenziali
10134 TURIN (Italy) - Corso E. Giambone, 33
Print no. 506.475/01 - Ottobre 1994 - 500
Printed in Italy - Tip. Europrint - Torino

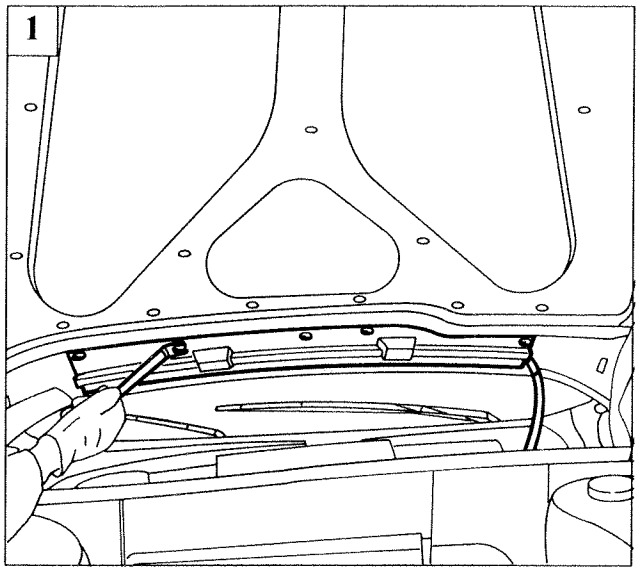

P3U01CB01

REMOVING

Place the car on ramps, disconnect the battery's negative cable and remove the front wheels.

NOTE *The procedures described in points 1 and 2 are not compulsory in order to remove and refit the gearbox and differential unit; however, they can facilitate some stages.*

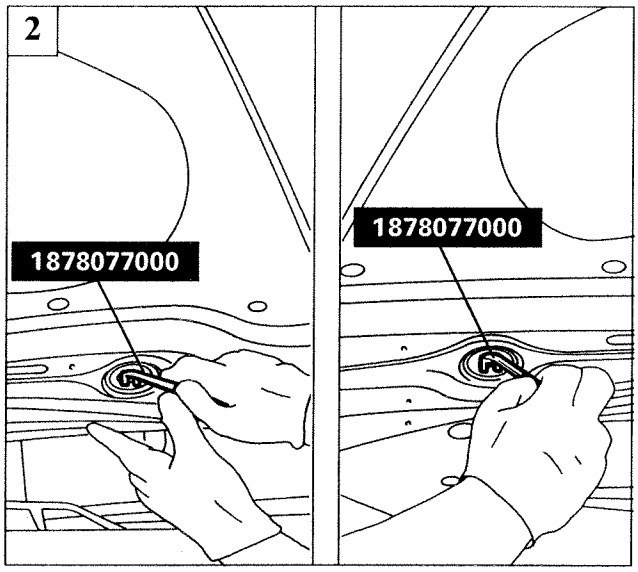

P3U01CB02

Proceed as described below:
1. remove the buttons shown in the figure using tool 1878077000;
2. remove the pipes from the windscreen washer jets and remove the bonnet;
3. disconnect the positive cable, undo the locking bolt and remove the battery;
4. undo the attachment bolts and remove the battery cage;

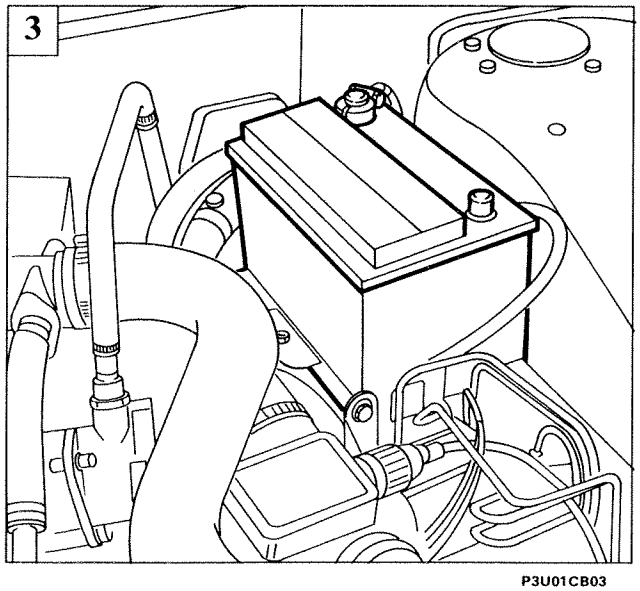

P3U01CB03

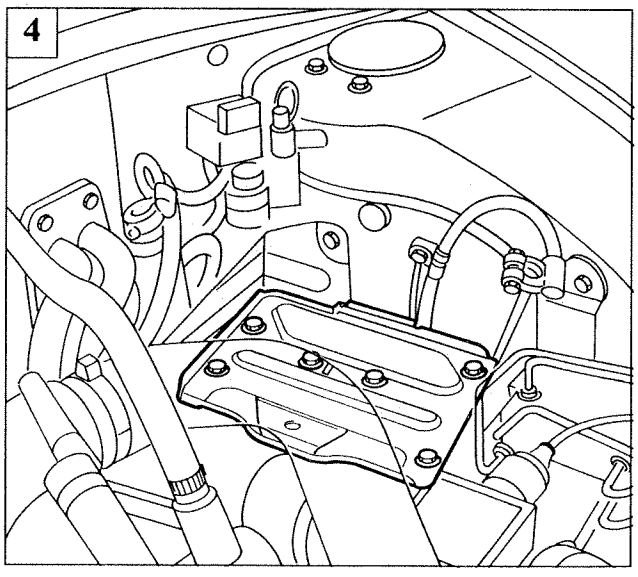

P3U01CB04

Copyright Fiat Auto

21-27.

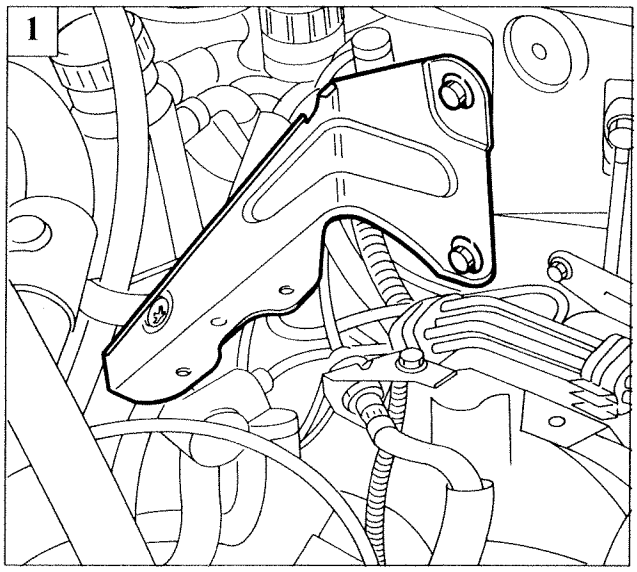

P3U02CB01

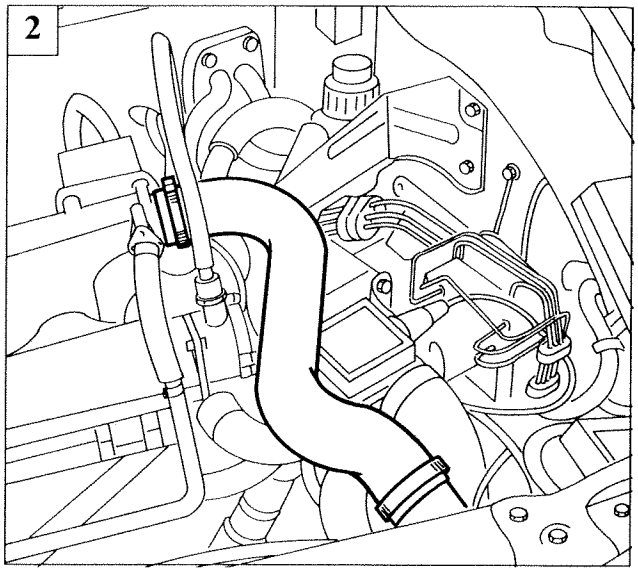

P3U02CB02

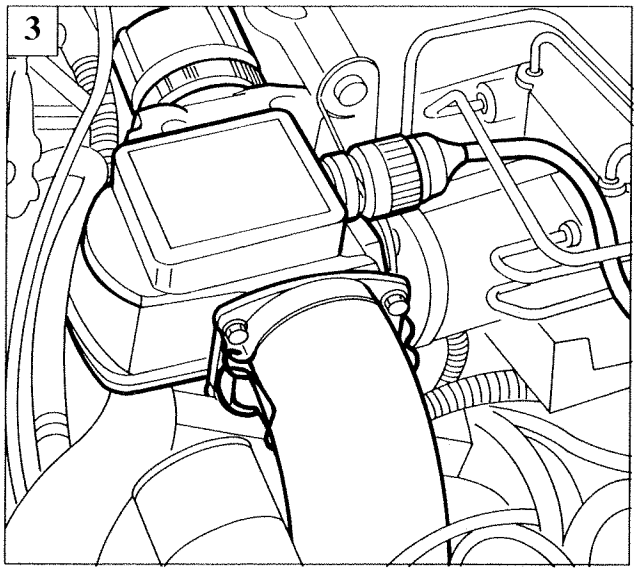

P3U02CB03

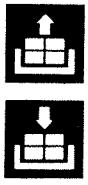

1. undo the bolts and remove the battery cage's rear mounting bracket;
2. undo the clips and remove the air intake hose between the manifold and the intercooler;
3. disconnect the wiring connection and air ducts, and remove the flowmeter by undoing the bracket nuts shown in Figure 4;
4. debimeter;
5. disconnect the three-way connection, undo the clip and remove the air hose;

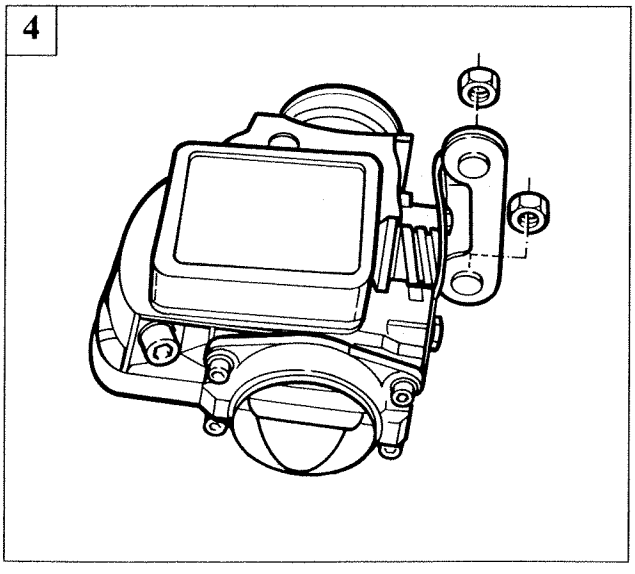

P3U02CB04

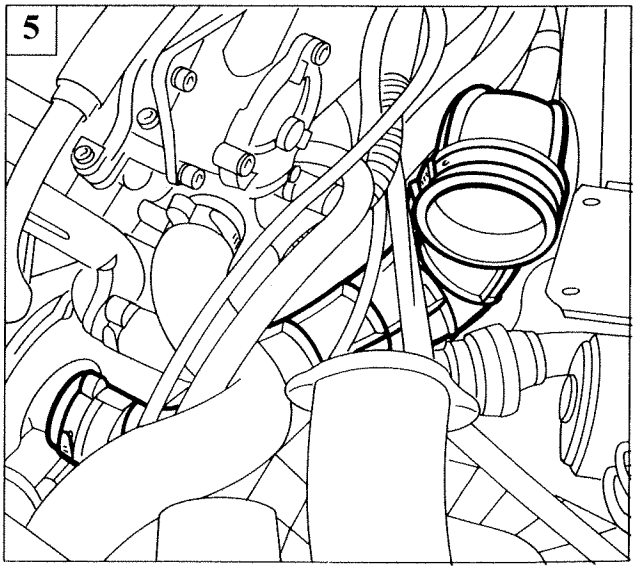

P3U02CB05

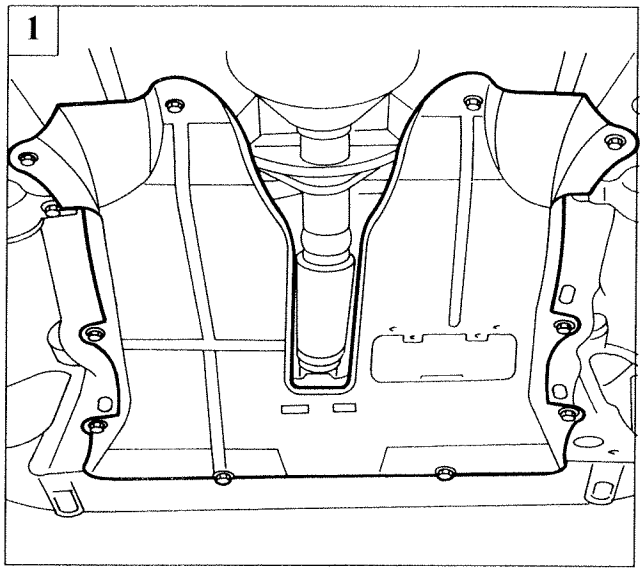

P3U03CB01

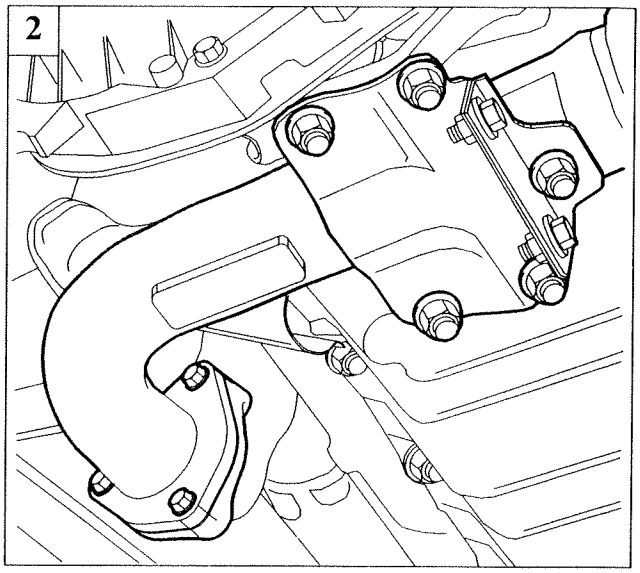

P3U03CB02

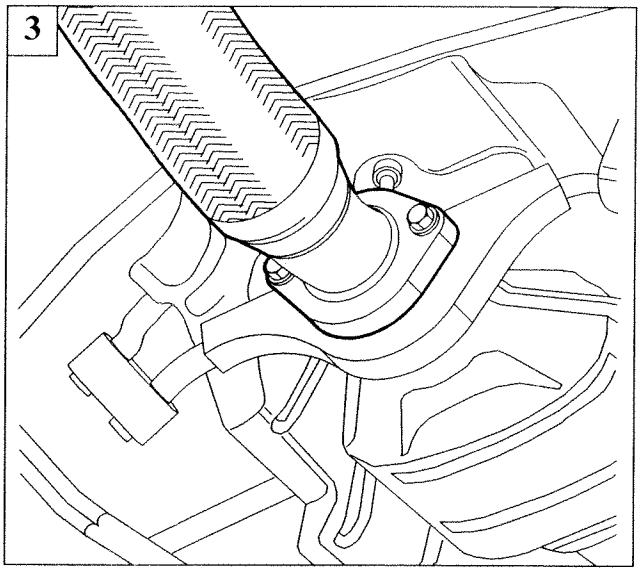

P3U03CB03

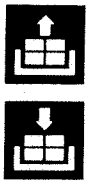

1. remove the engine compartment bottom guard;
2. undo the bolts securing the front section of the exhaust pipe to the manifold and the bolts securing the support plates;
3. undo the bolts securing the front section of the exhaust pipe to the catalyser and remove the exhaust pipe;
4. remove the additional plastic left wheelarch (two parts);
5. disconnect the earth cable from the engine mounting, gearbox side;

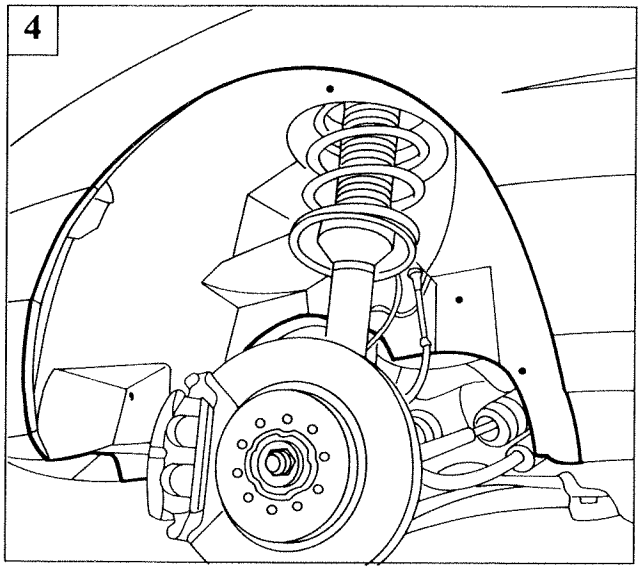

P3U03CB04

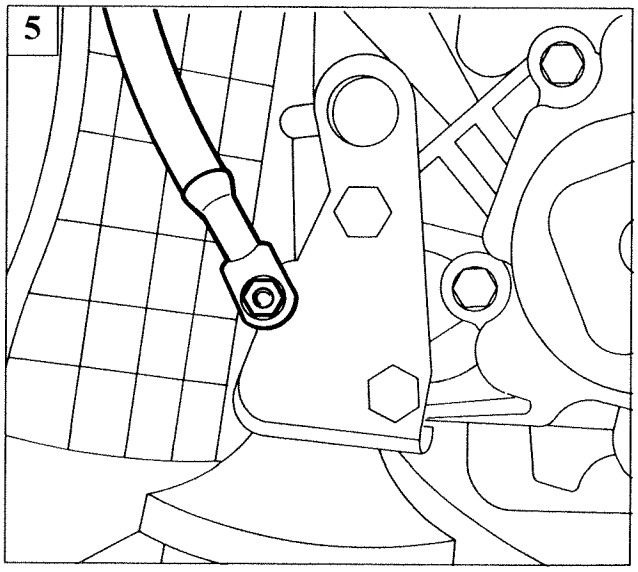

P3U03CB05

Copyright Fiat Auto

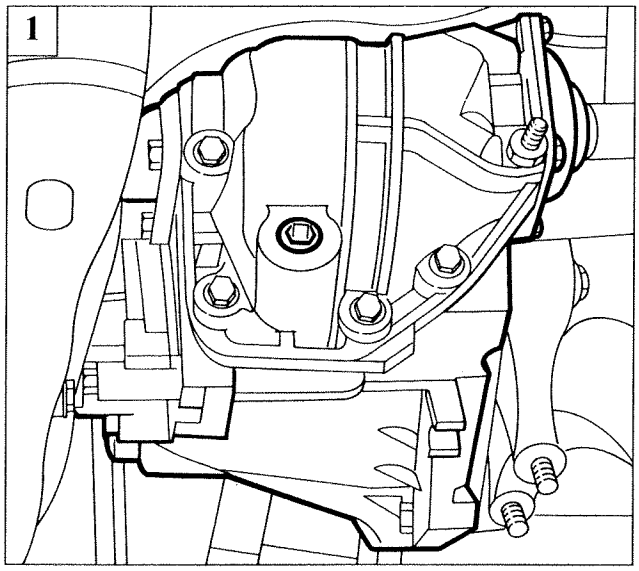

P3U04CB01

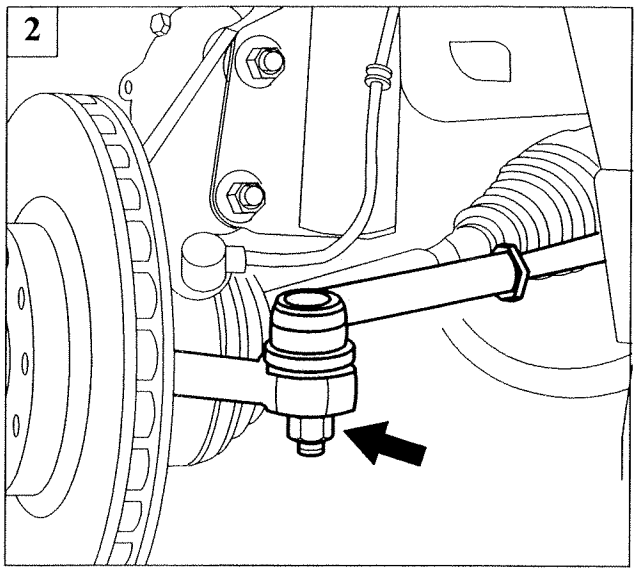

P3U04CB02

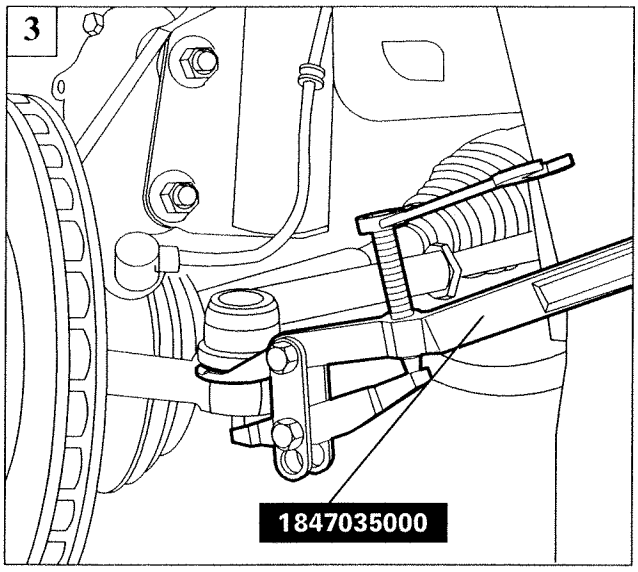

P3U04CB03

1. drain the oil from the gearbox-differential unit;
2. undo the nut securing the track rod end balljoint pin to the vertical link;
3. use tool 1847035000 to prise off the track rod end balljoint pin to the vertical link;
4. remove the wheel speed sensor from the vertical link;
5. undo the nut securing the connecting link to the wishbone;

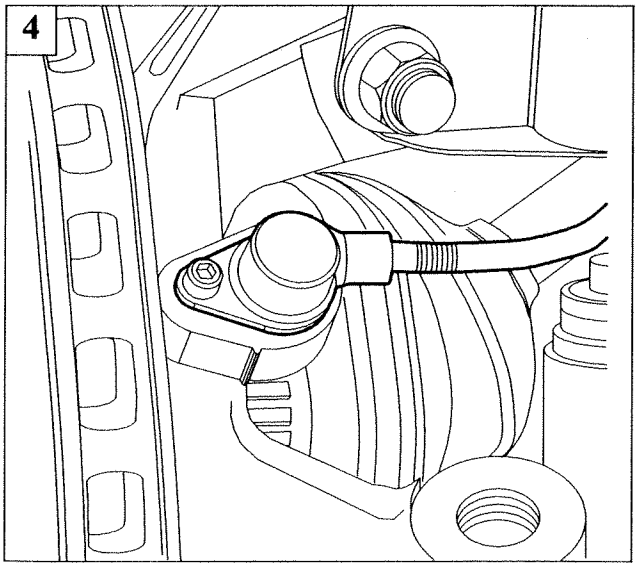

P3U04CB04

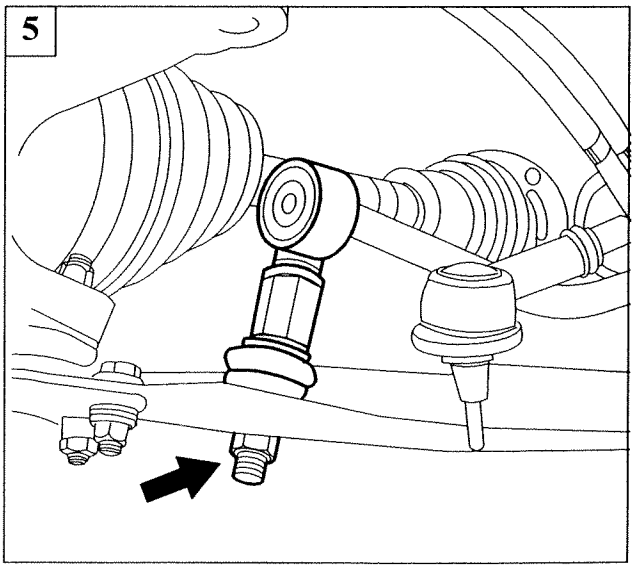

P3U04CB05

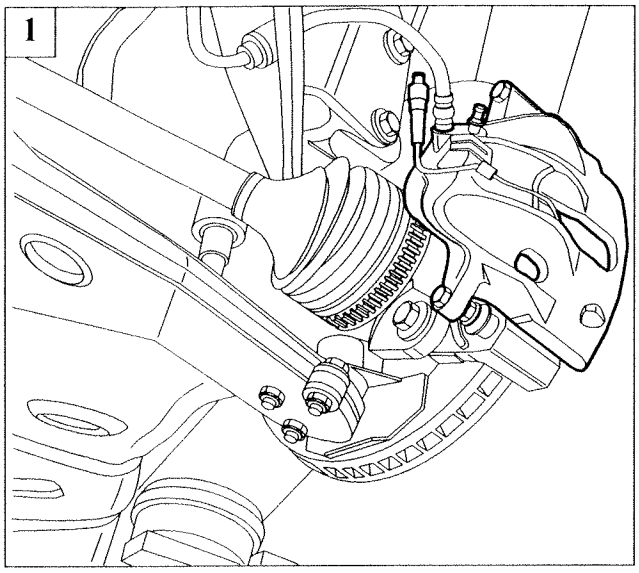

P3U05CB01

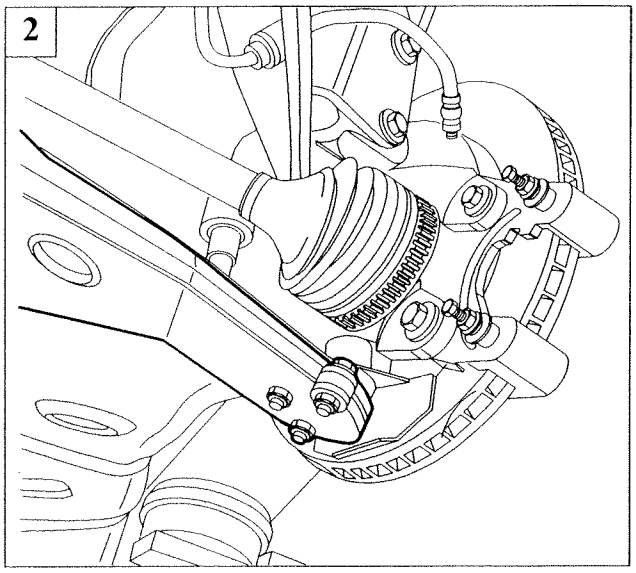

P3U05CB02

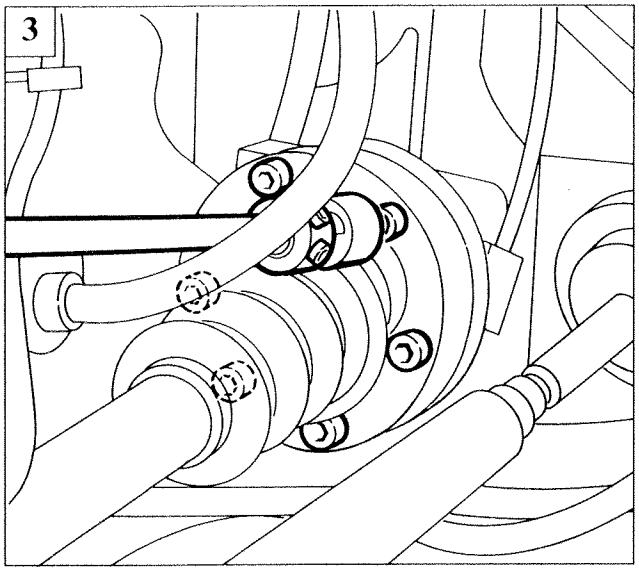

P3U05CB03

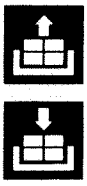

1. disconnect the brake pad wear sensor connector, remove the brake caliper and secure it as appropriate in the wheelarch space;
2. undo the bolts securing the balljoint head to the wishbone;
3. disconnect the left drive shaft coupling by undoing the bolts indicated;
4. undo the bolts securing the shock absorber to the vertical link;
5. withdraw the left drive shaft complete with vertical link and brake disc;

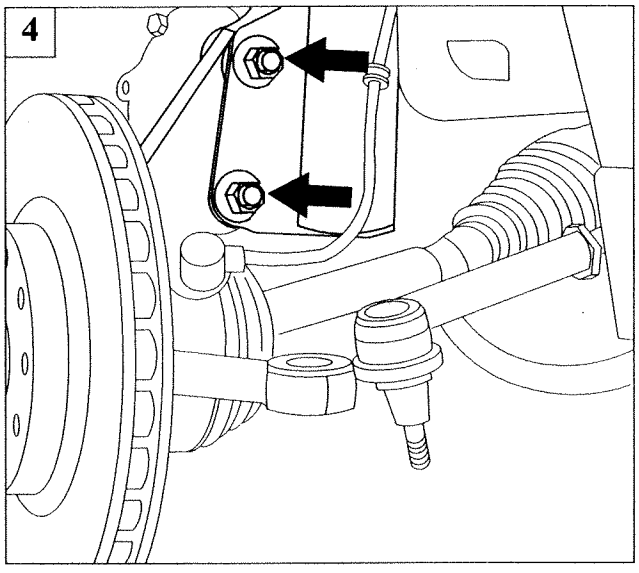

P3U05CB04

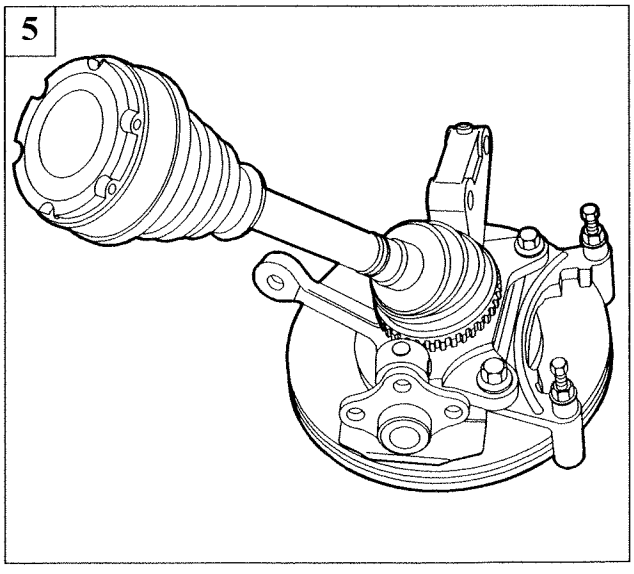

P3U05CB05

Copyright Fiat Auto

21-27.

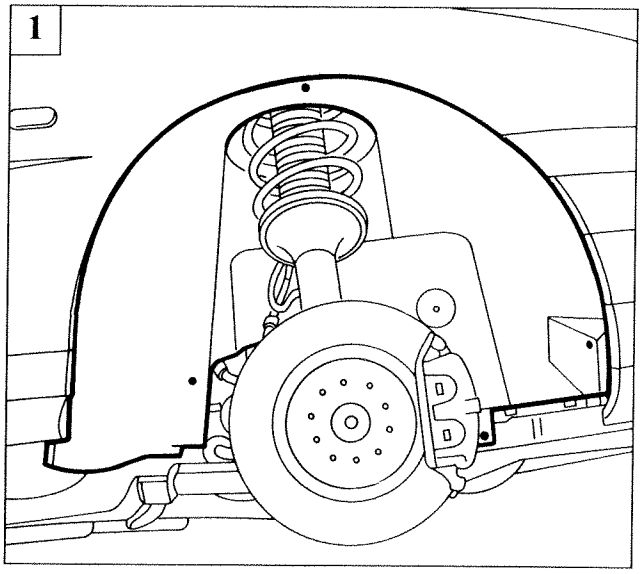

P3U06CB01

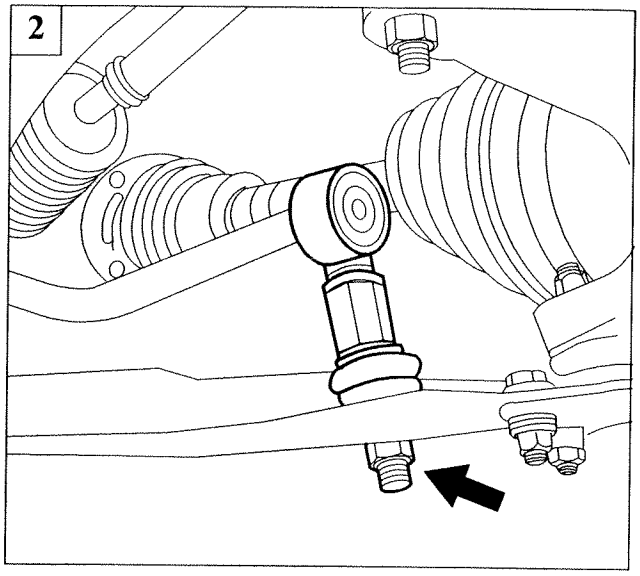

P3U06CB02

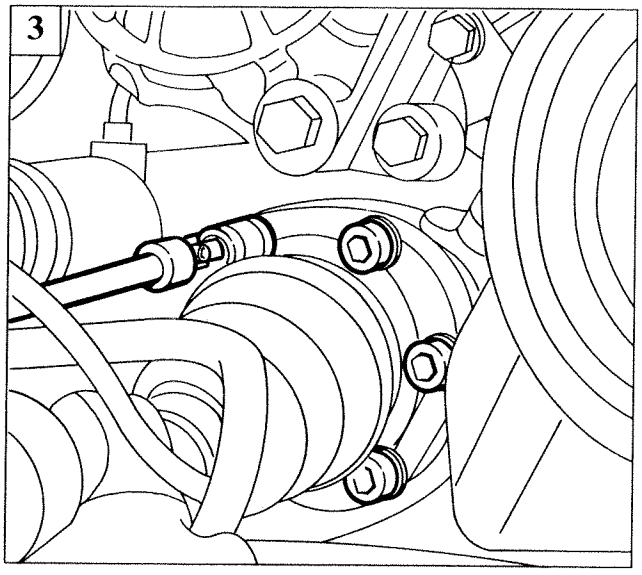

P3U06CB03

1. remove the additional plastic right wheel arch (two parts);
2. undo the nut securing the connecting link to the wishbone;
3. disconnect the right drive shaft coupling, then position it at the rear of the engine compartment;
4. undo the bolts securing the intermediate shaft;
5. withdraw the intermediate shaft from the differential;

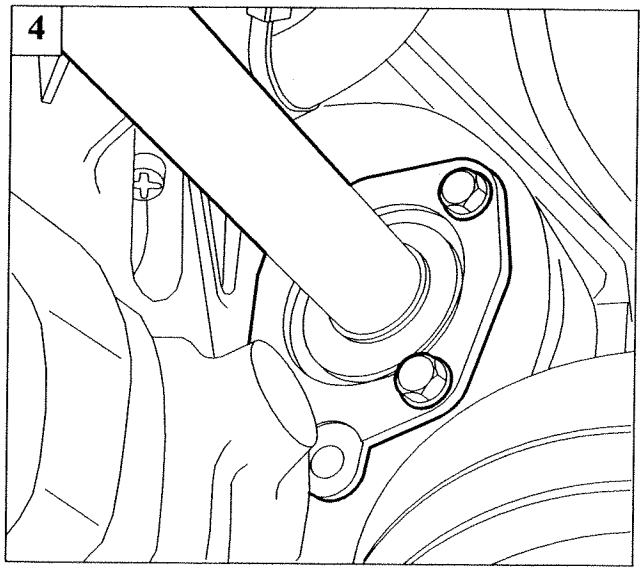

P3U06CB04

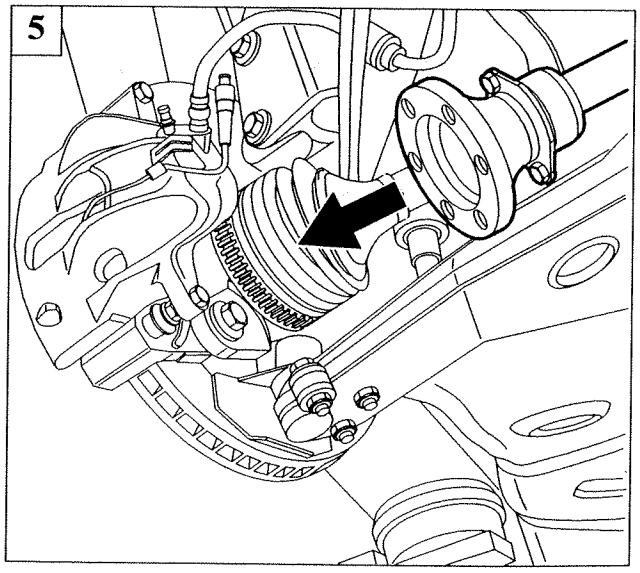

P3U06CB05

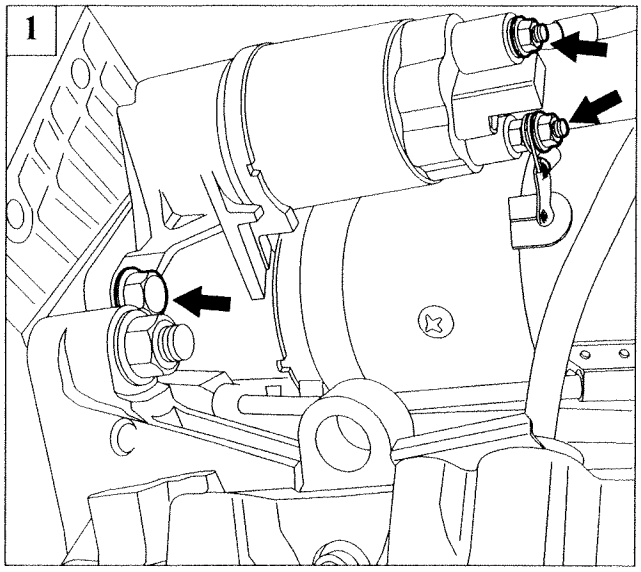

P3U07CB01

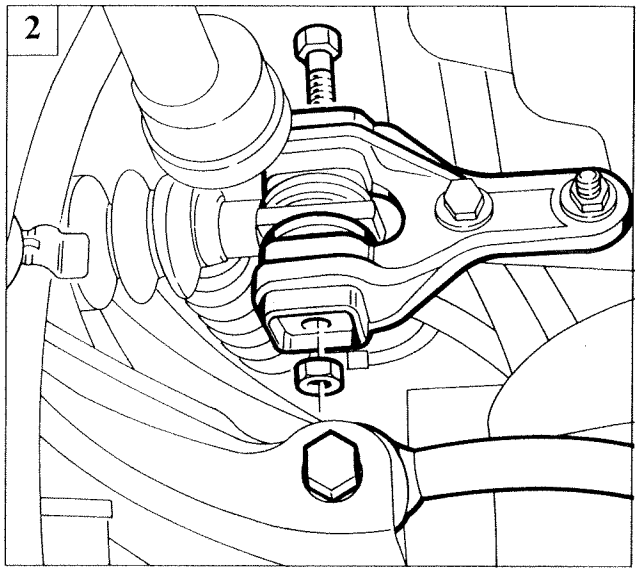

P3U07CB02

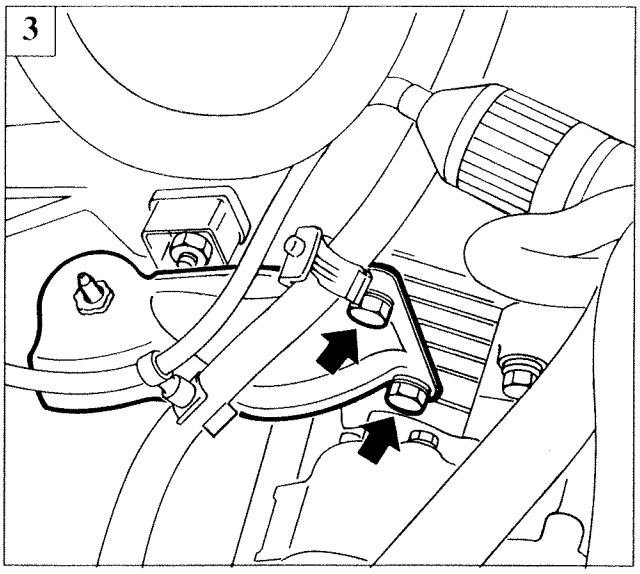

P3U07CB03

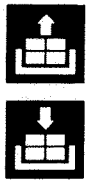

1. disconnect the starter motor supply cables, then undo the starter motor attachment bolts and remove it;
2. disconnect the two gearbox control levers;
3. remove the bottom bolt securing the gearchange control reaction bracket;
4. remove the clutch cylinder complete with attachment bracket;
5. undo the nuts securing the ABS hydraulic control unit to the bracket and its bottom attachment;

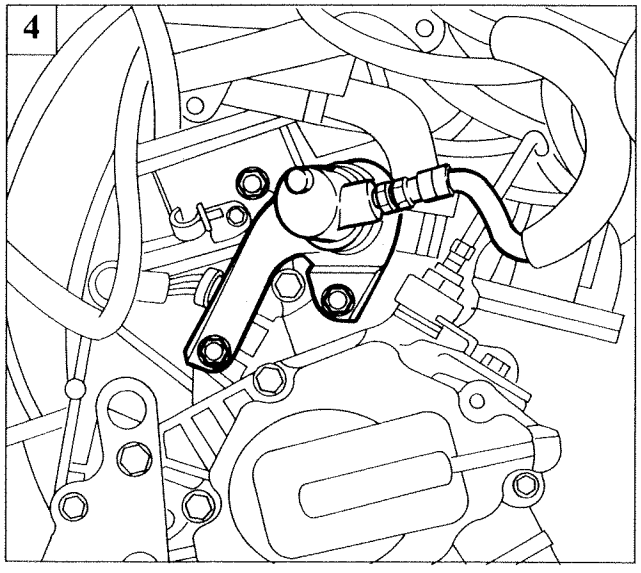

P3U07CB04

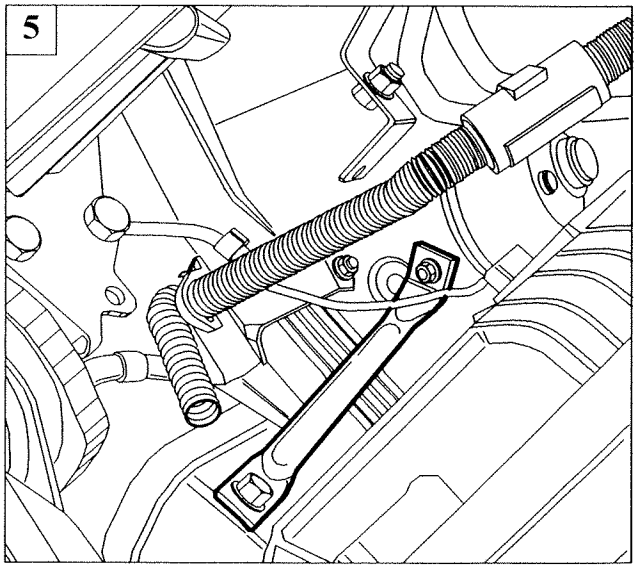

P3U07CB05

Copyright Fiat Auto

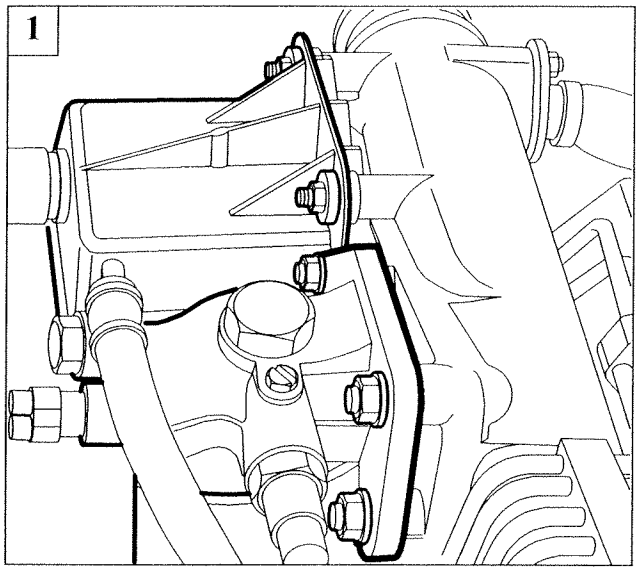

P3U08CB01

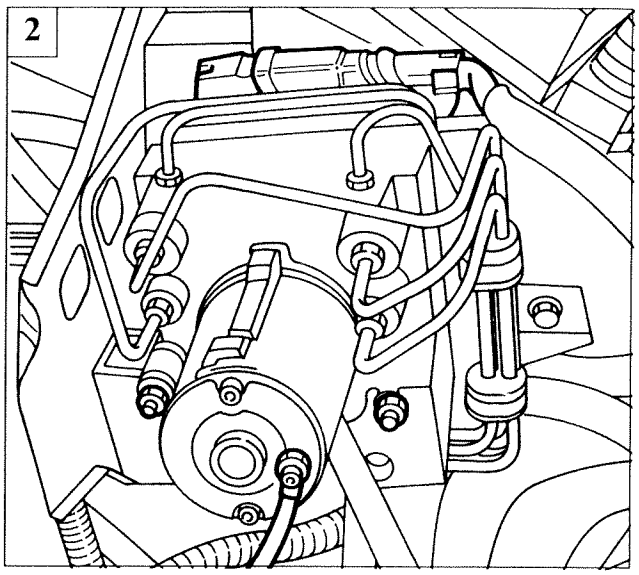

P3U08CB02

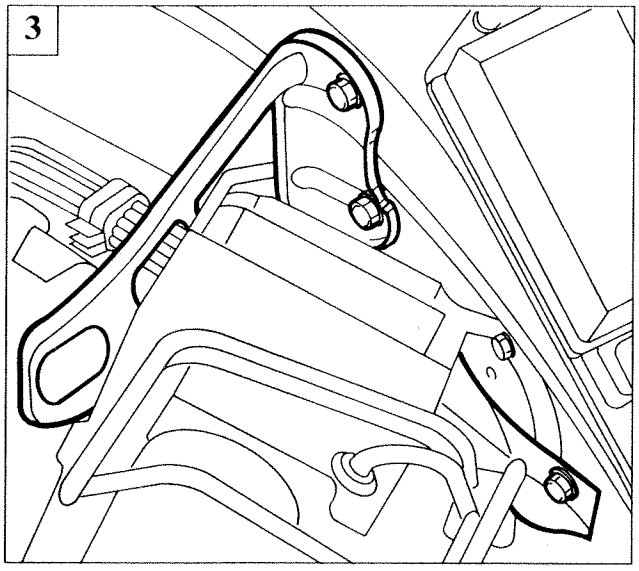

P3U08CB03

1. undo the nuts securing the oil vapour separator and diesel filter, and remove them from the block;
2. disconnect the wiring connector and earth cable and remove the ABS control unit from its mounting bracket;
3. undo the bolts securing the ABS electrohydraulic control unit mounting bracket to the body shell and detach it;
4. undo the bolt securing the brake fluid pipe bracket;
5. push aside the ABS electrohydraulic control unit and secure it outside the working area, taking care not to damage the pipes;

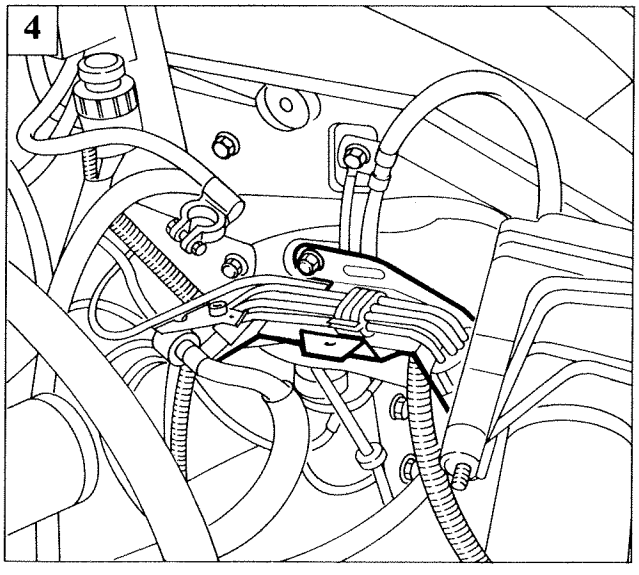

P3U08CB04

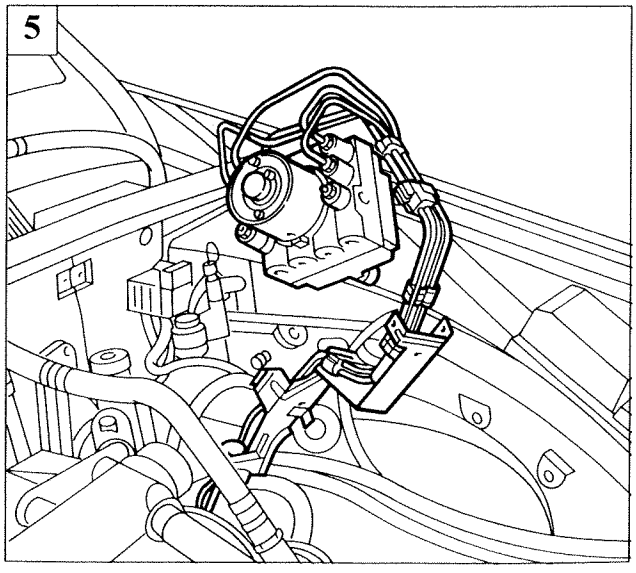

P3U08CB05

1

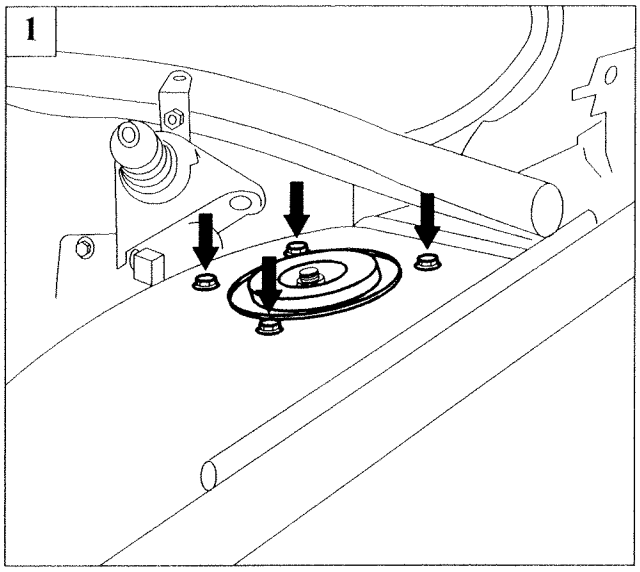

P3U09CB01

2

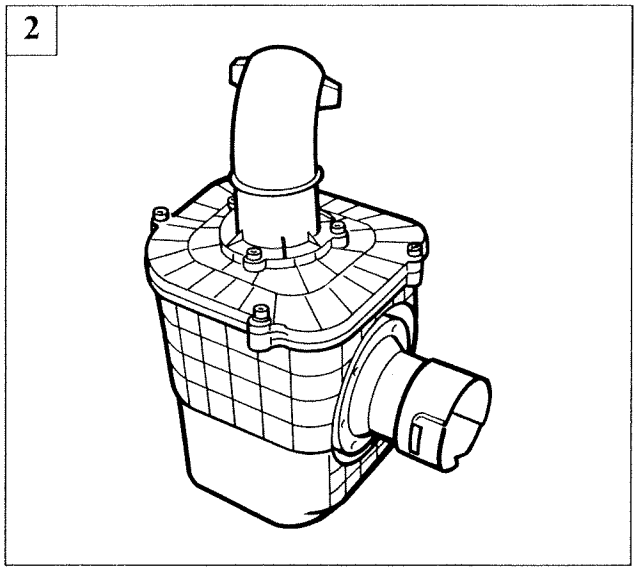

P3U09CB02

3

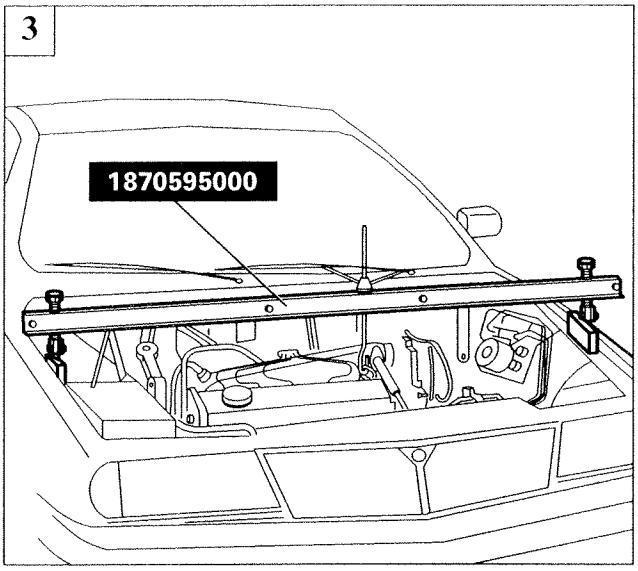

P3U09CB03

1. undo the top bolts securing the shock absorber to the body shell, and remove it;
2. remove the air cleaner assembly, by disconnecting the intake pipe (which is press fitted);
3. install the engine support crossbeam 1870595000;
4. connect one end of the chain to the adjustable support on the crossbeam;
5. connect the other end of the chain to the engine; using the crossbeam's adjustable support, place the chain under slight tension;

4

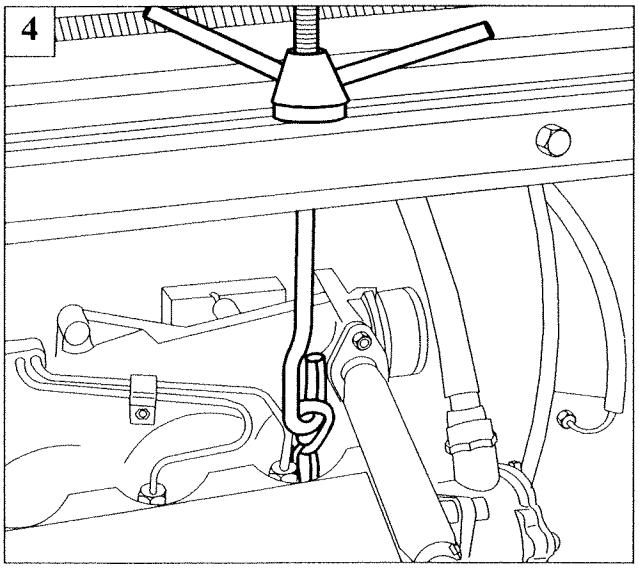

P3U09CB04

5

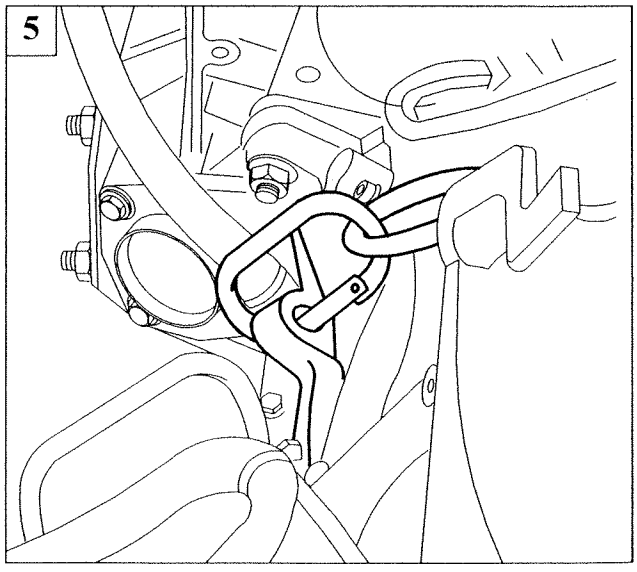

P3U09CB05

Copyright Fiat Auto

21-27.

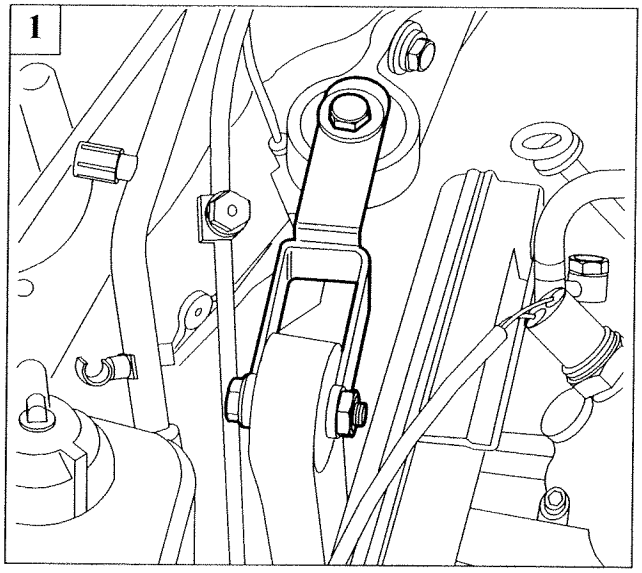

P3U10CB01

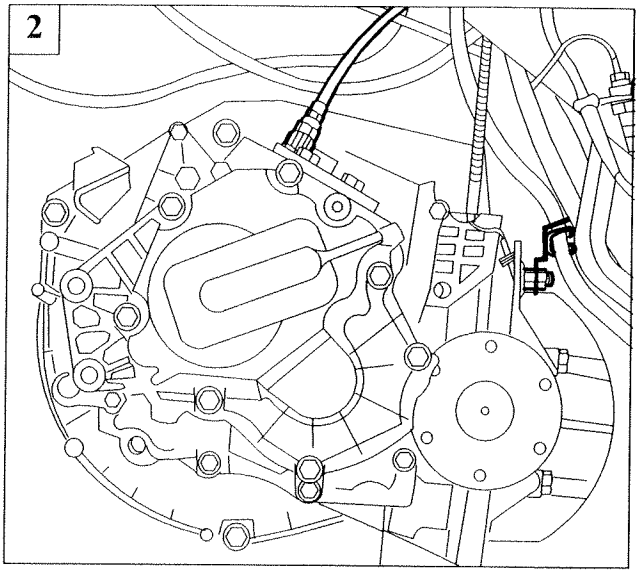

P3U10CB02

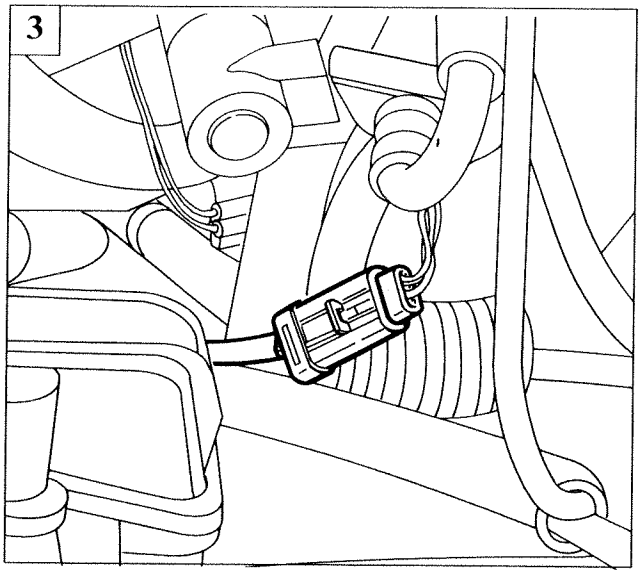

P3U10CB03

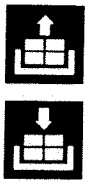

1. undo the bolts securing the engine top right mounting and remove it;
2. remove the reverse gear inhibitor and undo the nut securing the cable mounting bracket on the gearbox;
3. disconnect the vehicle speed sensor wiring connection;
4. undo the bolts securing the engine bottom mounting, gearbox side, to the chassis;
5. undo the nut securing the engine rear mounting in order to enable the gearbox-differential unit to be withdrawn;

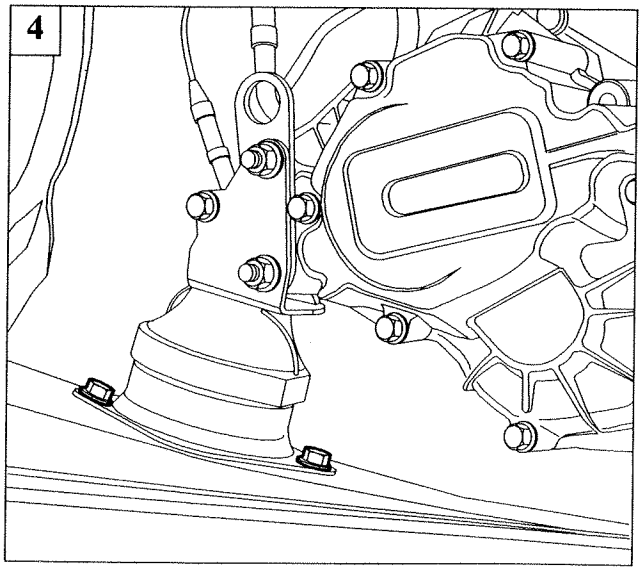

P3U10CB04

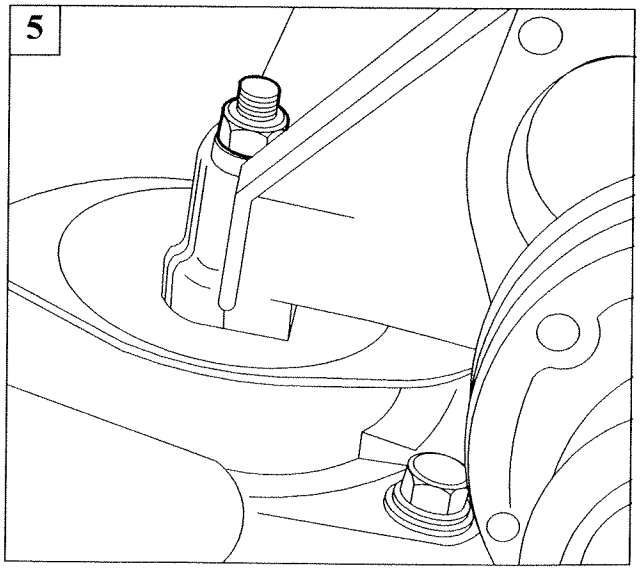

P3U10CB05

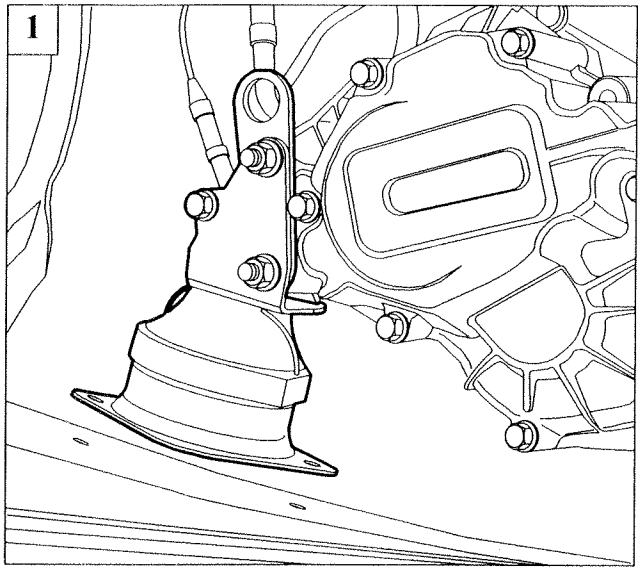

P3U11CB01

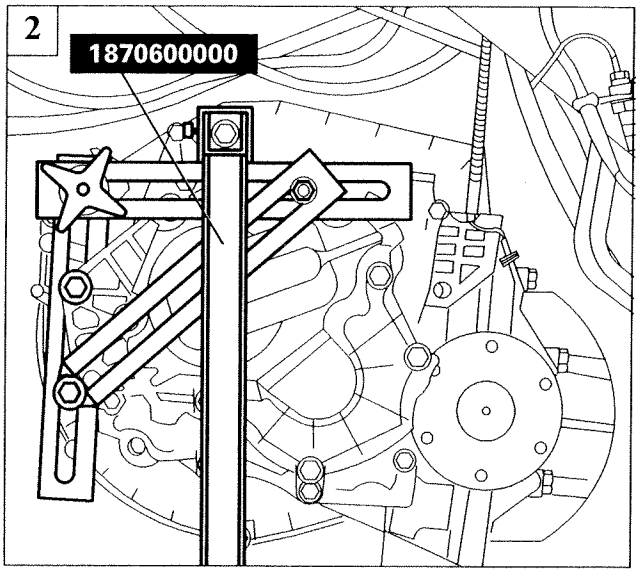

P3U11CB02

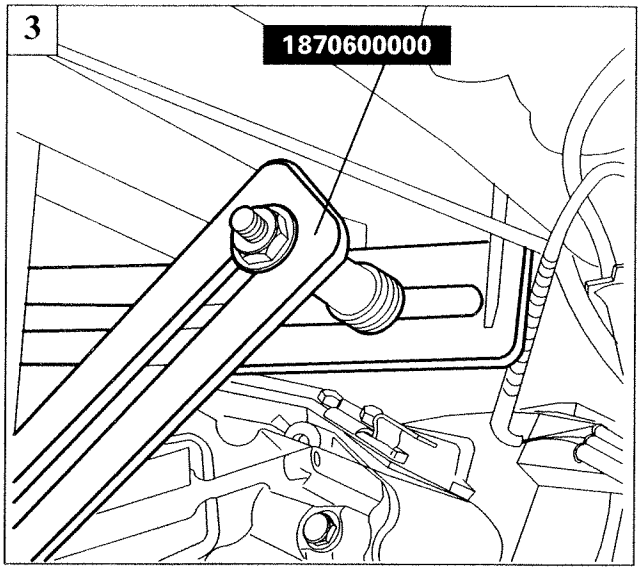

P3U11CB03

1. lift the engine slightly using the adjustable support on the crossbeam, then undo the bolts securing the engine mounting, gearbox side, and remove it;
2. prepare the gearbox support tool 1870600000 by positioning it on the hydraulic jack;
3. detail of attachment of tool 1870600000 with spacer and washers;
4. detail of attachment of tool 1870600000 with C-bracket locked on the gearbox;
5. detail of attachment of tool 1870600000 with bracket connected to the gearbox;

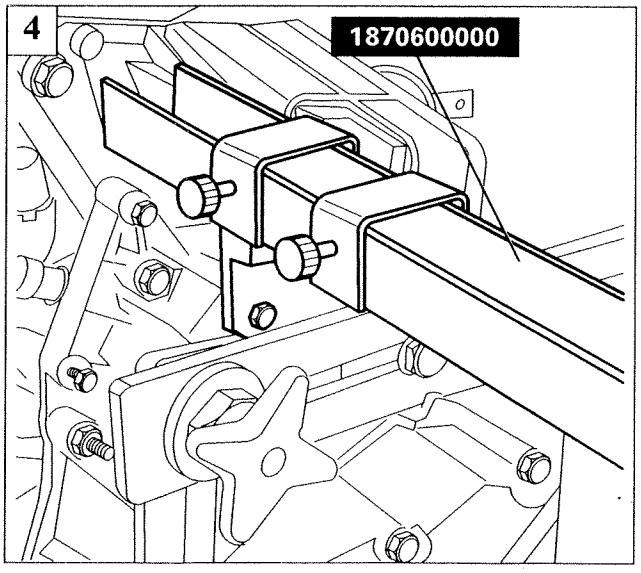

P3U11CB04

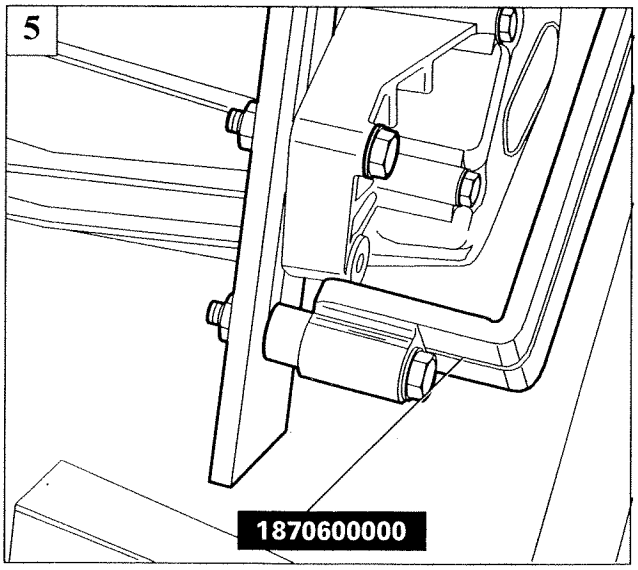

P3U11CB05

Copyright Fiat Auto

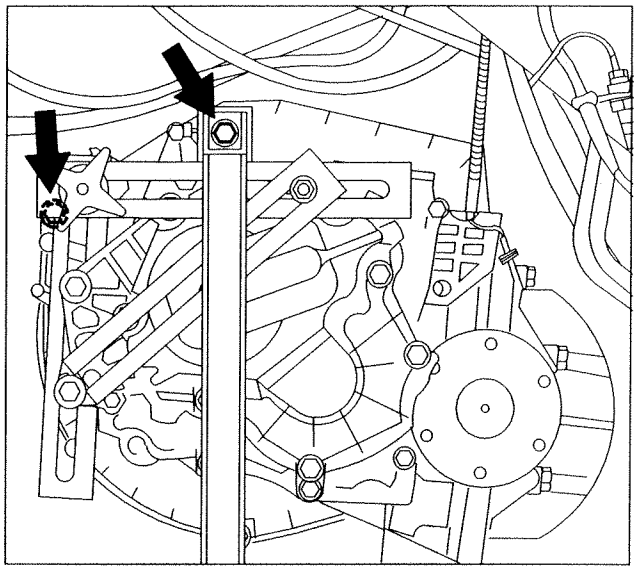

P3U12CB01

- undo the front bolts securing the gearbox-differential unit to the engine;

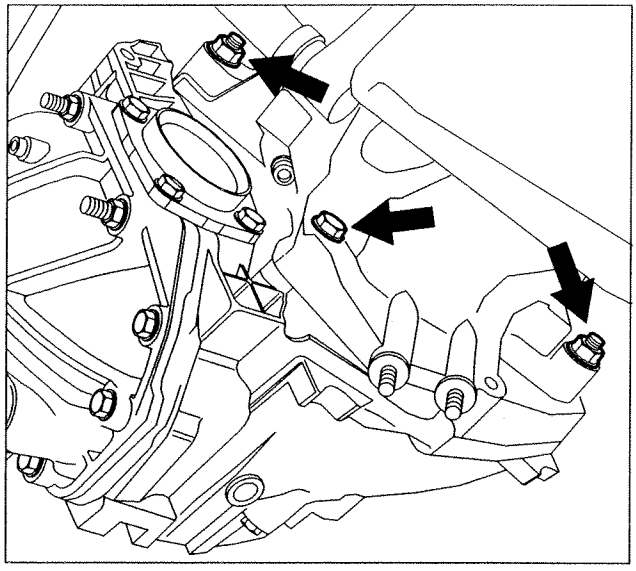

P3U12CB02

- undo the remaining bolts securing the gearbox-differential unit to the engine;

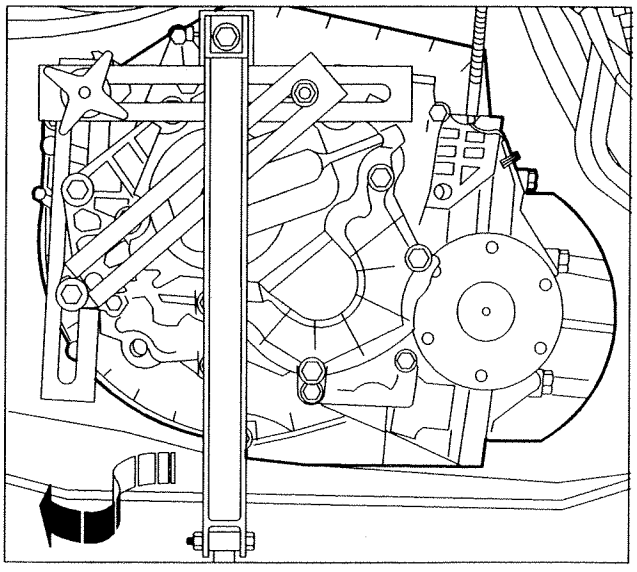

P3U12CB03

- manoeuvre the gearbox-differential unit to release it from the centring pins on the engine and to withdraw the main shaft from the driven plate, then lower the hydraulic jack and withdraw the gearbox-differential unit, manoeuvring it in the direction shown by the arrow.

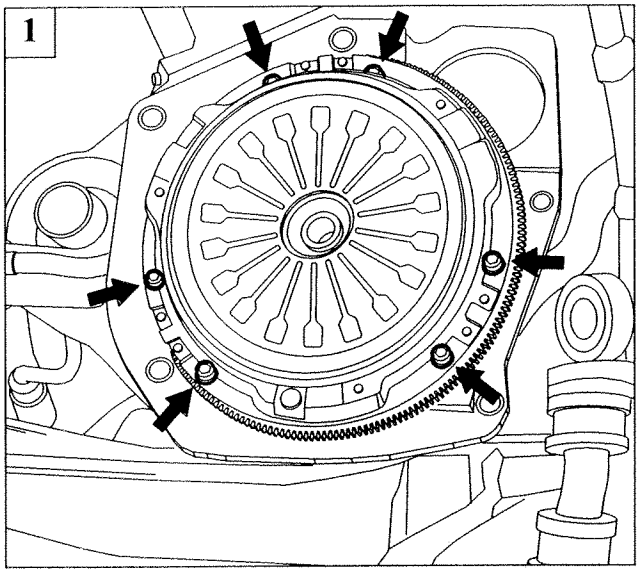

P3U13CB01

REFITTING

Before refitting the gearbox-differential unit by reversing the procedure for removal, the clutch release bearing must be withdrawn from the clutch spring and repositioned in the release fork, as described below:

1. remove the clutch assembly;

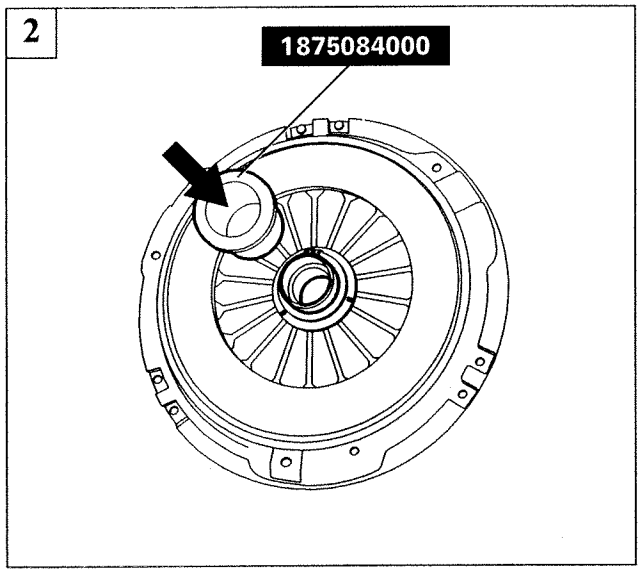

P3U13CB02

2. use tool 1875084000 and remove the clutch release bearing from the clutch spring;

The bearing must not be noisy or have tight spots, otherwise it will have to be replaced.

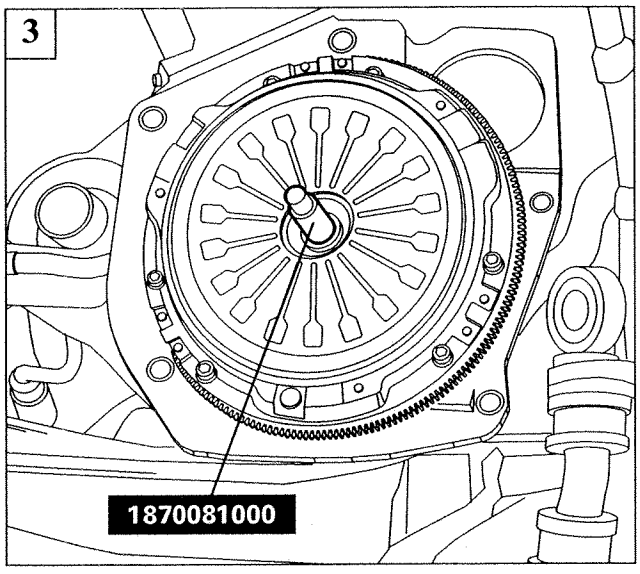

P3U13CB03

3. use the centring pin 1870081000 to align the driven plate and then fit the clutch assembly;

Copyright Fiat Auto

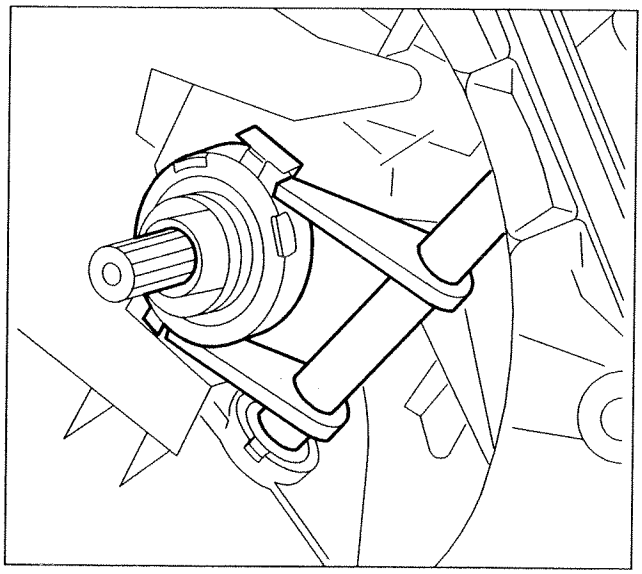

P3U14CB01

Fitting clutch release bearing on the sleeve of the gearbox main shaft

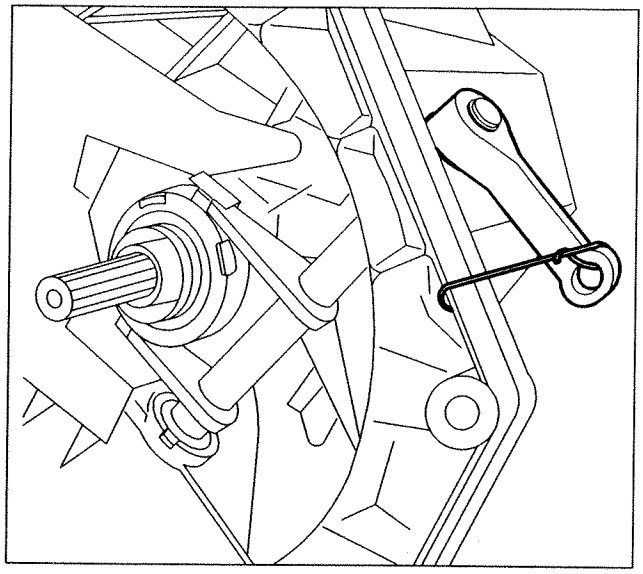

P3U14CB02

NOTE *To refit the gearbox-differential unit to the engine, secure the clutch release lever, making sure that it is positioned as shown in the figure.*

Securing clutch release lever

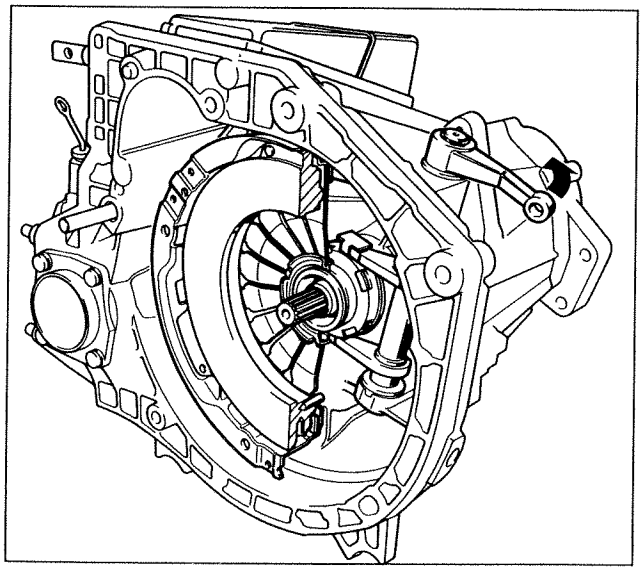

P3U14CB03

NOTE *After refitting, push the clutch release lever hard in the direction of the arrow, in order to engage the clutch release bearing on the clutch spring.*

Fitting clutch release bearing in its seating

Contents

21-27.

page

DESCRIPTION AND OPERATION

- Description 1
- Selector lever 3
- Torque converter 4
- Oil pump 5
- Epicyclic gearing 6
- Control components 7
- Hydraulic control system 9
- Transmission of motion 10
- Control system 16
- Transmission control module 17
- Principles of operation 20
- Gearchange solenoids 30
- Oil pressure modulation solenoid 31
- Gearbox oil temperature sensor 31
- Selector lever position sensor 32
- Wiring diagram 33
- Troubleshooting 34

SERVICING AND ADJUSTMENT

- Replacing gearbox oil 37
- Checking oil level 37
- Gearchange control cable 38
- Selector lever 42

Copyright Fiat Auto

COPYRIGHT FIAT AUTO

The reproduction, even partial, of the text and illustrations is prohibited.

The information contained in this publication is purely indicative and could be out of date following modifications made by the Manufacturer, at any time, for technical or commercial reasons or in order to conform to legal requirements in the various countries.

Fiat Auto S.p.A.
Direzione Marketing e Commerciale
Servizi al Cliente - Servizi Post Vendita
10134 TORINO (Italy) - Corso E. Giambone, 33
Publication no. 506.475/07 - Giugno 1995 - 400
Printed in Italy - Tip. Graficat - TORINO
order no. 60489638

DESCRIPTION

Introduction

The LANCIA k 3.0 V6 24v uses a 4-gear ZF 4HP-18EH automatic transmission and differential, specially designed for vehicles with front-wheel drive and transverse-mounted engine, comprising an electronic control system connected to the engine management control unit.

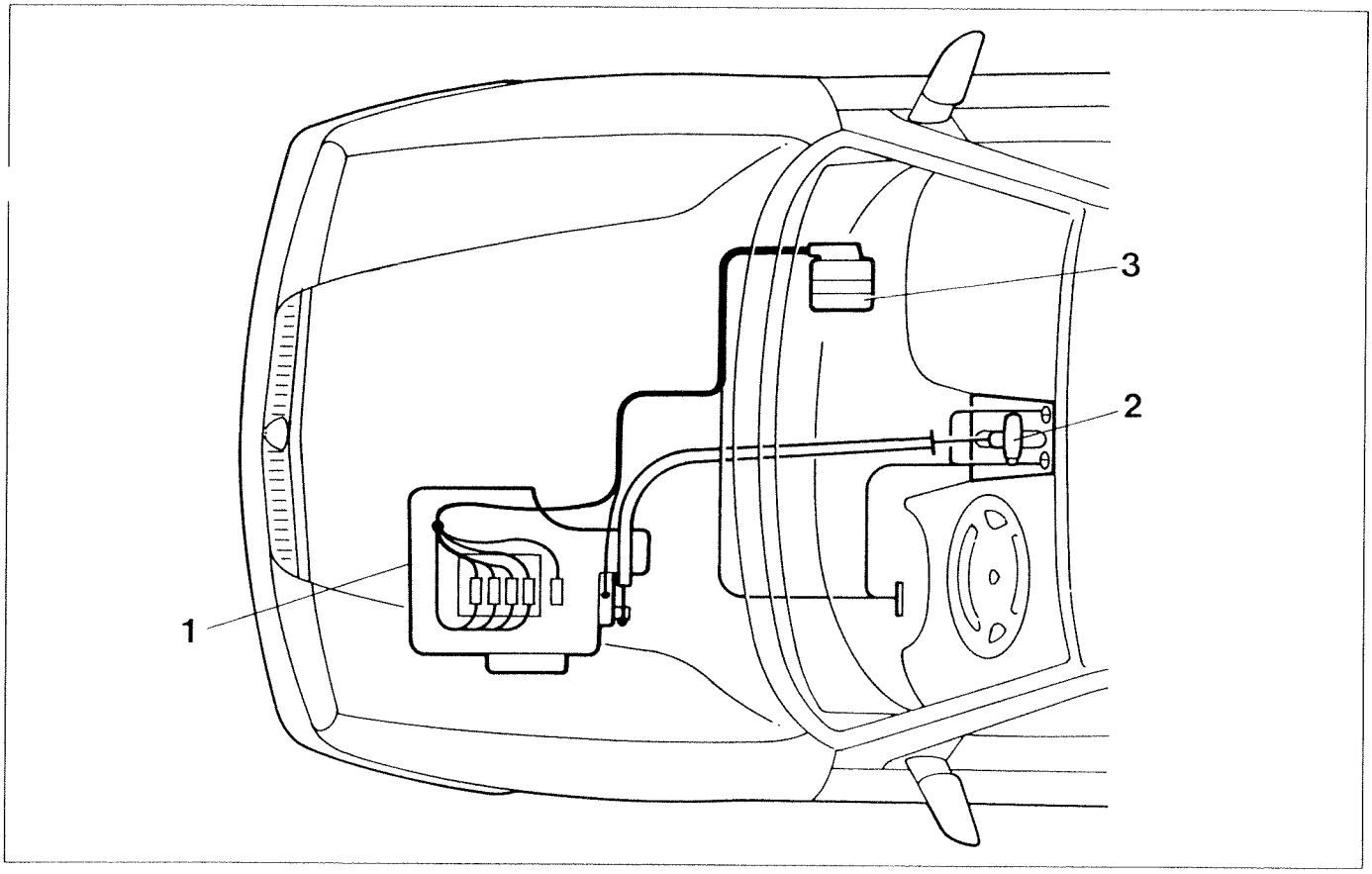

P3U01EB01

1. Gearbox-differential unit
2. Selector lever
3. Transmission control unit (TCM)

The electronic control logic of the automatic transmission is contained in an "intelligent" control unit located under the dashboard on the passenger side.
The transmission control module (TCM) is connected to the various sensors/actuators located on the gearbox, engine and dashboard, the fuel injection/ignition control unit for exchanging engine information and to the instrument panel for displaying operating conditions.

The mechanical unit of the automatic transmission consists of:
- an oleodynamic torque converter, comprising a torsional damper;
- Ravigneaux type epicyclic gearing which achieves the various transmission ratios;
- one band brake, two multiple disc brakes and three multiple disc clutches, operated hydraulically, and two free wheels which achieve the locking between the various gearing components to obtain the four forward gears and reverse gear;
- a parking lock, consisting of a gear with ratchet gear which locks the gearbox with the lever in the P (Park) position.

Copyright Fiat Auto

The TCM interacts in the hydraulic operation of the gearbox unit, issuing the appropriate commands for operating the clutches and brakes, through four solenoids located at the top of the automatic transmission

Partially cutaway view of ZF 4HP-18EH automatic transmission

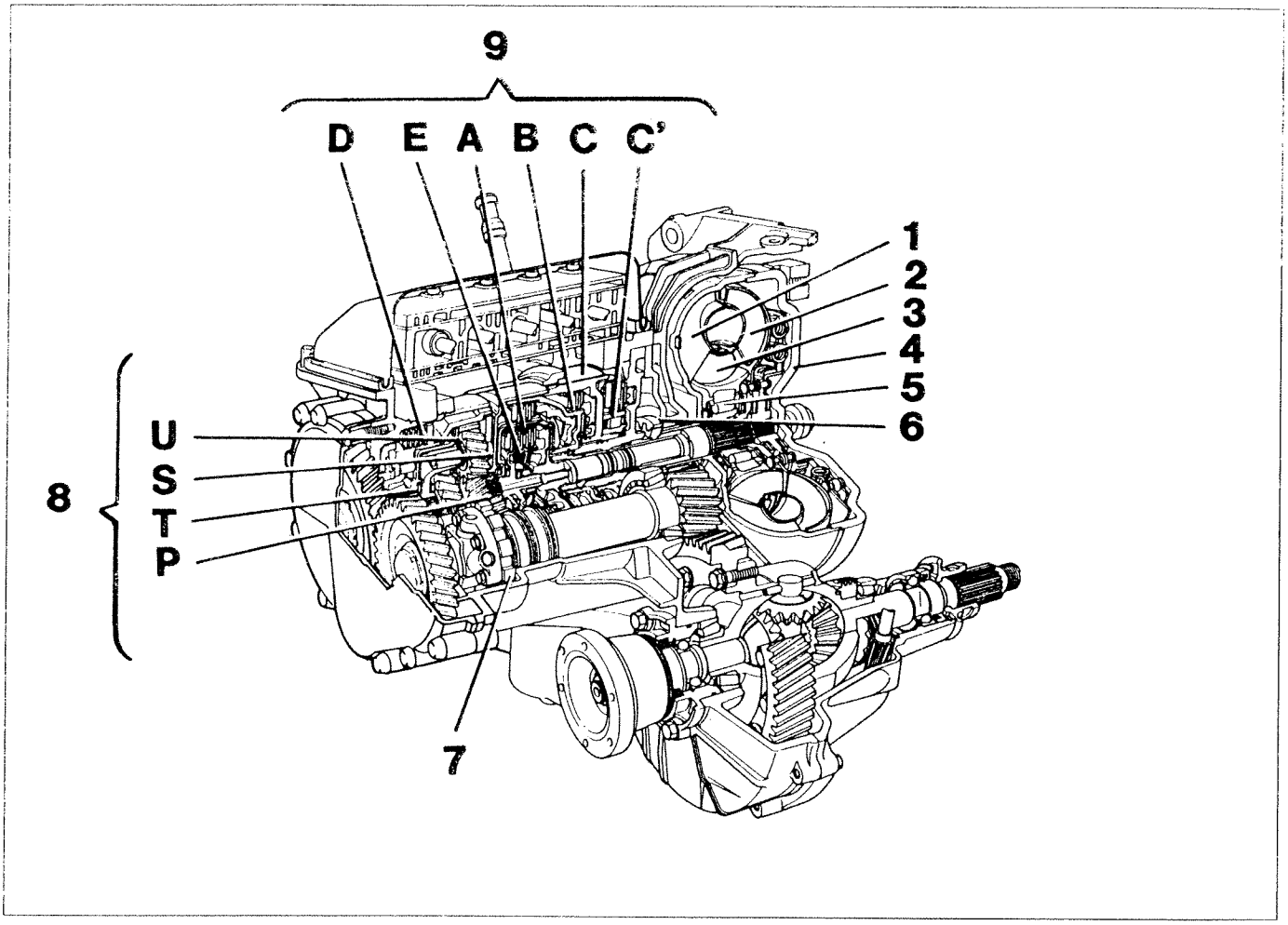

P3U02EB01

1. Torque converter pump
2. Torque converter turbine
3. Torque converter stator
4. Torsional damper
5. Free wheel
6. Oil pump
7. Safety lock
8. Epicyclic gearing
   - U Crownwheel
   - S Planetary gears
   - T Gear train carrier
   - P Sun gears
9. Set of components for changing ratio
   - A-B-E Multiple disc clutches
   - C-D Multiple disc brakes
   - C' Band brake

SELECTOR LEVER

A selector lever is used to select the gears. It is located on the central console, and has a safety button (2) to protect against involuntary gear engagements. It is connected to the automatic transmission by means of a flexible cable, and it acts on the valve assembly and on an electrical device through which a coded electrical signal indicating the lever position (P, R, N, D, 3, 2, 1) is transmitted to the control module.

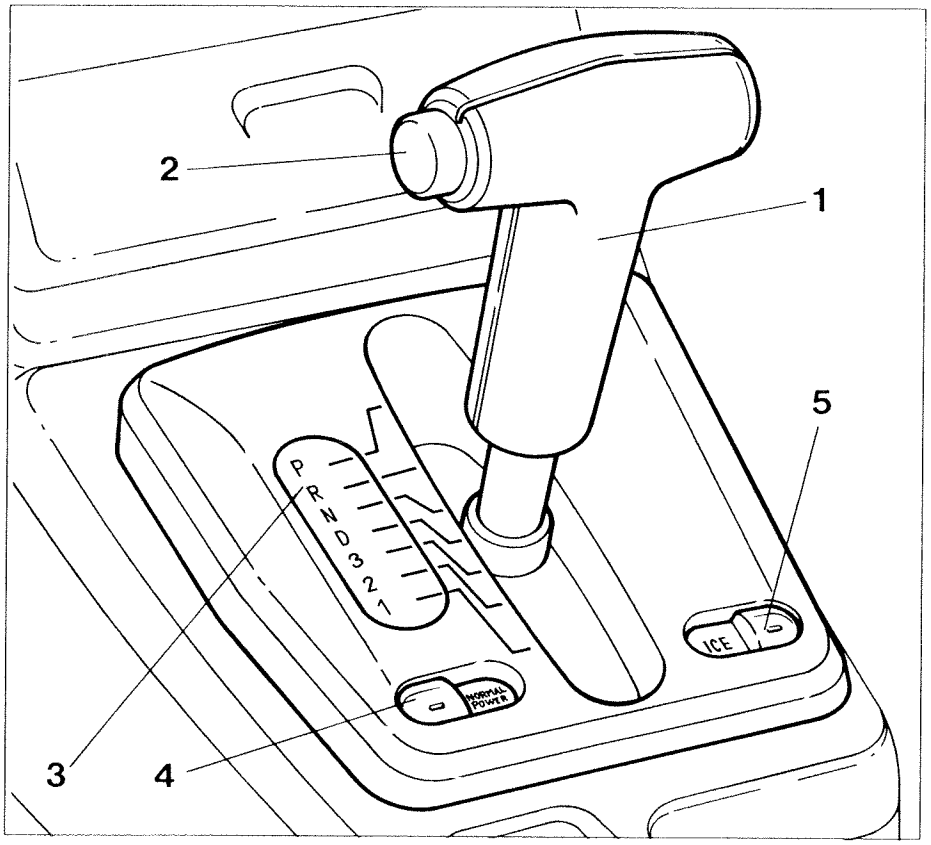

P3U03DB01

1. Selector lever
2. Safety button (to prevent accidental gear engagements)
3. Lever position display
4. NORMAL/POWER button (used to change over between NORMAL mode and POWER mode and vice versa)
5. ICE button (for driving on slippery roads)

The following positions can be set with the selector lever:

P	*Park*	The driving wheels are locked (the engine can be started)
R	*Reverse*	Reverse ratio (the reversing lights are switched on)
N	*Neutral*	Neutral position (the engine can be started)
D	*Drive*	Automatic operation of the transmission on all four speeds
3	*3rd gear*	Automatic operation of the transmission on the first 3 speeds (the change to 4th gear is inhibited)
2	*2nd gear*	Automatic operation of the transmission on the first 2 speeds (the change to 3rd and 4th gears is inhibited)
1	*1st gear*	Operation only in 1st gear (with engine braking effect)

NOTE *A safety function prevents engagement of the lower speeds (even if the selector lever is moved manually) under conditions which would cause the engine to over-rev.*

Copyright Fiat Auto

TORQUE CONVERTER

The function of the torque converter is to transmit hydraulically the power from the engine to the gearbox and to increase the torque when the vehicle is accelerating. The rotary motion is transmitted to the epicyclic gearing via two transmission shafts:
- the crankshaft connected to the converter pump via the flywheel;
- the gearbox main shaft which engages in the hub of the converter's turbine.

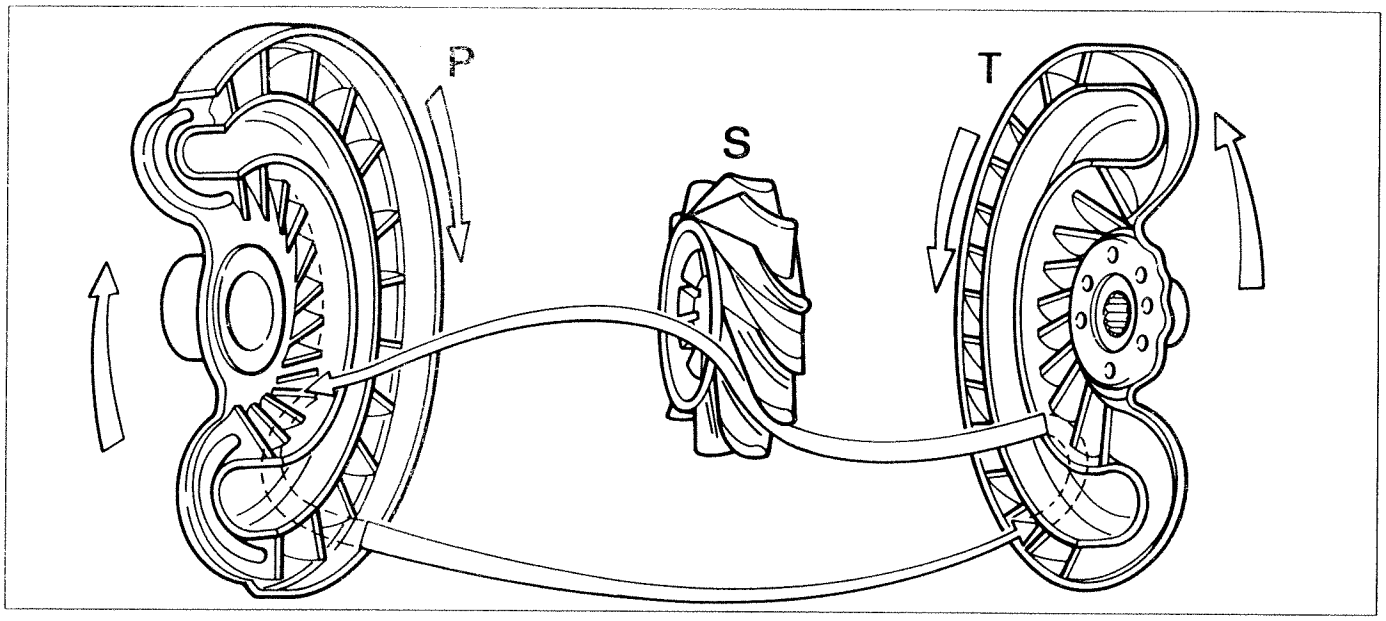

P3U04DB01

P. Pump S. Stator T. Turbine

The converter consists of a pump P joined to the crankshaft, a turbine T joined to the gearbox main shaft, and a stator S joined to the gearbox outer casing. The converter is completely filled with oil which, because of the kinetic energy supplied to it by the pump, permits transmission of the driving torque.

NOTE *The torque converter does not wear at all since there is no mechanical connection between the driven part and the driving part.*

The impeller P is connected to the crankshaft and, rotating in a clockwise direction, acts as a pump, transmitting its energy to the oil.
The centrifugal force pushes the oil towards the periphery of the impeller, where it flows at high speed towards the turbine T. Here the oil's kinetic energy impresses a clockwise rotary movement on the turbine. The oil then passes through the stator S, where it is diverted at an angle which enables it to return to the pump with high output. The stator is connected to the gearbox casing by means of a free wheel coupling, which prevents anti-clockwise rotation and provides a reaction torque proportional to the diversion of the oil flow, which is added to that of the turbine.

The ratio between the torque acting on the turbine and that supplied by the pump is known as the torque multiplication ratio, and is proportional to the difference in speed of rotation between the pump and turbine. With the wheels stopped, the torque is roughly double that delivered by the engine.
When the turbine speed is increased, the torque multiplication decreases continuously and tends to reach the ratio 1:1, corresponding to a turbine speed of 85-90% of that of the pump. When the turbine and pump speeds are almost equal, the stator is enveloped by a flow of oil at an angle which reverses the direction of rotation and, not being locked by the free wheel, it rotates in a clockwise direction without impediment and the torque converter acts as an ordinary hydraulic joint.

Torsional damper

In first, second and reverse gears, the driving torque is transmitted by the torque converter.
In third and fourth gears, the torque is transmitted first hydraulically by the converter, and then mechanically by the clutch E. It effects a mechanical coupling between the engine and the gear train carrier T of the epicyclic gearing, eliminating internal slipping of the converter.
Exclusion of the torque converter makes it possible to increase the transmission performance at high speed, causing a reduction in fuel consumption on long motorway journeys.

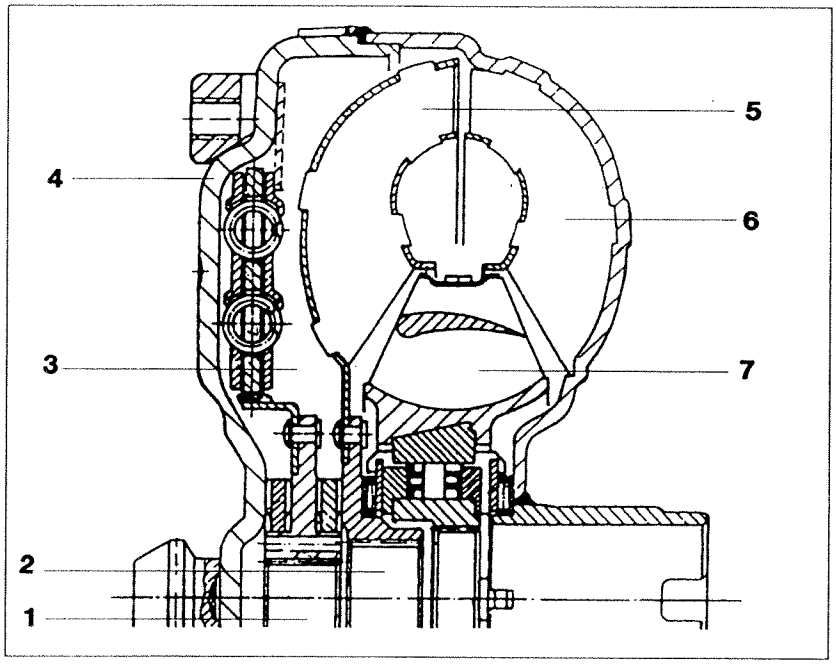

P3U05EB01

Between the converter cover connected to the flywheel and the crankshaft, there is a flexible coupling which acts as a damper of torsional vibrations.

1. Crankshaft
2. Turbine shaft
3. Torsional flexible coupling
4. Converter cover
5. Turbine
6. Pump
7. Stator

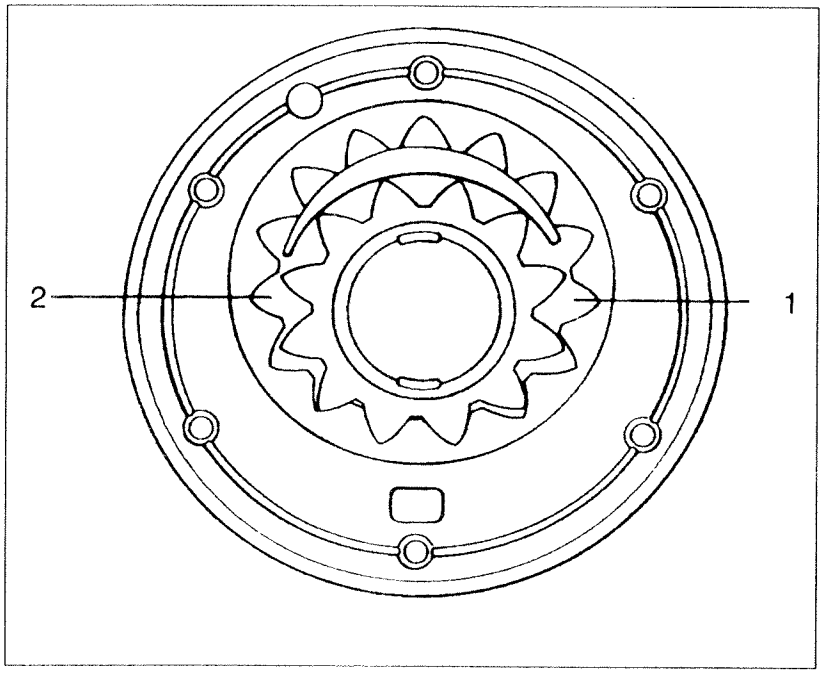

P3U05EB02

1. Inlet side
2. Delivery side

OIL PUMP

The oil pump used for the ZF automatic transmission is of the internal gear type.
It is located between the torque converter and the gearbox casing and is controlled directly by the impeller of the converter pump.

The oil pump carries out the following functions:
- is supplies the necessary pressure to the hydraulic control system and to the gearbox control components (clutches and brakes);
- it sends a flow of oil into the torque converter casing to cool it down;
- it lubricates the gearbox's moving components;
- it circulates oil in the cooling system.

Copyright Fiat Auto

EPICYCLIC GEARING

To achieve the five transmission ratios (4 forward gears + reverse), the ZF automatic gearbox uses a "Ravigneaux" epicyclic gearing consisting of a double epicyclic gear set comprising:
- a small pinion (or sun gear) P1,
- a large pinion (or sun gear) P2,
- three short planet gears S1,
- three long planet gears S2,
- a crownwheel U.

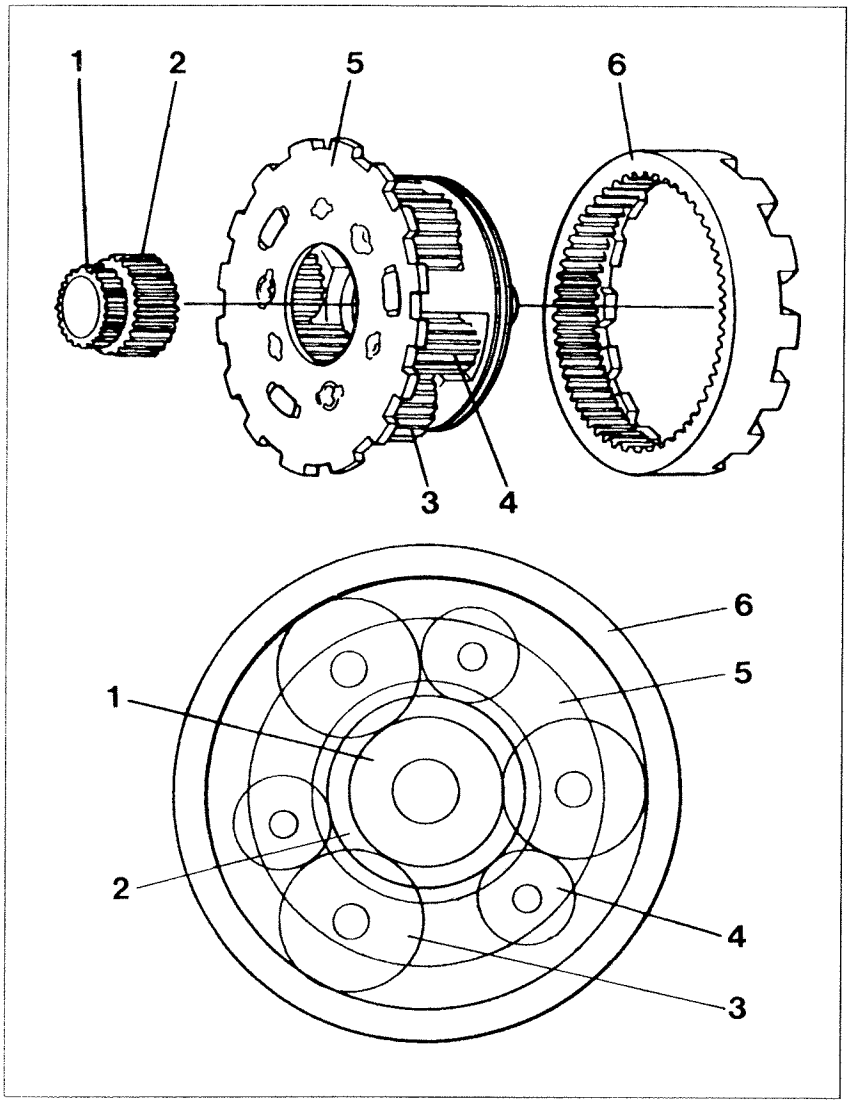

P3U06EB01

Ravigneaux epicyclic gearing

1. Small sun gear P1
2. Large sun gear P2
3. Short planet gears S1
4. Long planet gears S2
5. Gear train carrier T
6. Crownwheel U

The different ratios are obtained by transmitting the power through certain gears in the set of toothed wheels, while at the same time locking others. The driving force is always transmitted to the output shaft by means of the crownwheel U.

CONTROL COMPONENTS

The automatic transmission control components consist of multiple disc clutches and brakes, a band brake and free wheels, which prevent the relative rotation between two components of the epicyclic gearing, or between one of latter and the outer casing, to obtain the four forward gears and reverse gear.

Clutches

The clutches used in the ZF automatic transmission are all of the multiple disc type. They are activated by the valve assembly, installed in the gearbox's hydraulic control system.

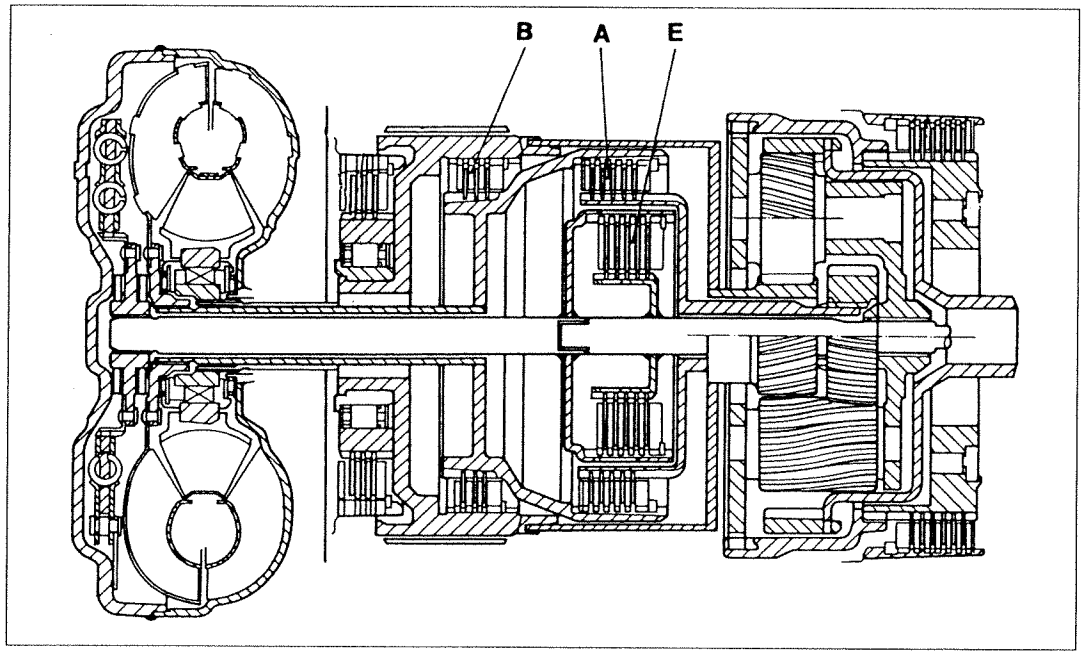

P3U07EB01

The clutch A prevents relative rotation between the main shaft and sun gear P2.
The clutch B prevents relative rotation between the main shaft and sun gear P1.
The clutch E prevents relative rotation between the crankshaft and gear train carrier T, so excluding the torque converter.

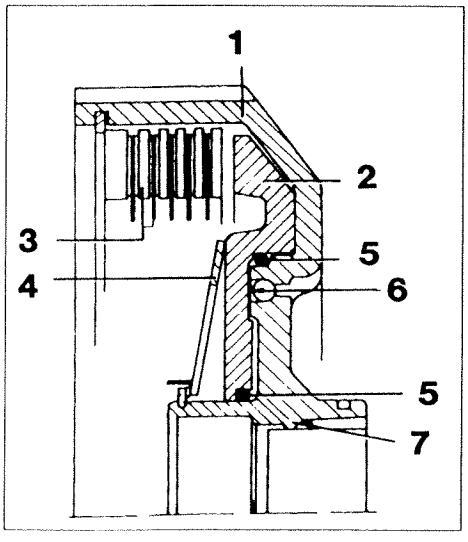

P3U07EB02

Disc clutches and brakes

1. Cylinder
2. Piston
3. Set of discs (inner, intermediate and outer)
4. Belleville washer
5. Set of "O" rings
6. Vent
7. Oil supply

The clutches and brakes are operated hydraulically by the pressurized oil inserted between the cylinder (1) and piston (2).
As the pressure reduces, the Belleville washer (4) pushes the piston towards its original position.
The hydraulic operation and continous lubrication permit the transmission of driving power without wear, so the gearbox components do not require periodical maintenance.

Copyright Fiat Auto

Braking system

There are three brakes in the ZF automatic transmission, two of which are of the multiple disc type, while the third is a band brake. They are operated by the valve assembly located in the gearbox hydraulic control unit.

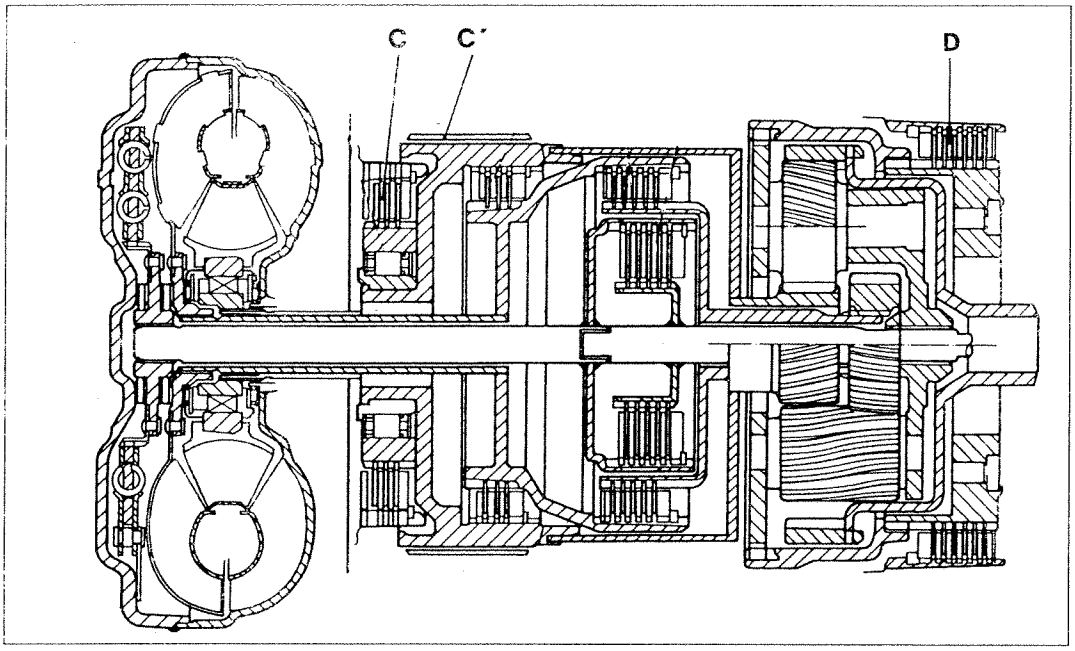

P3U08EB01

The brake C stops rotation of the inner ring of the free wheel R2, preventing the sun gear P1 from rotating in an anti-clockwise direction.
The brake D stops the rotation of the gear train carrier T.
The band brake C' stops rotation of the sun gear P1.

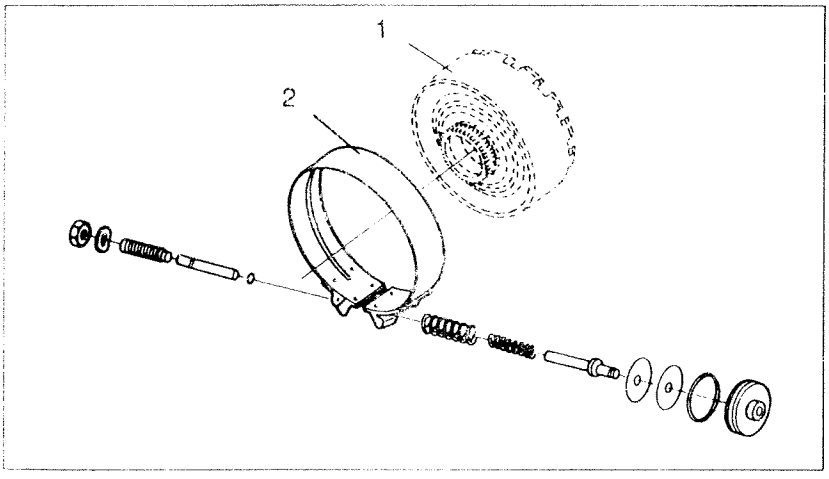

P3U08EB02

Band brake

The band of the brake C', operated by a hydraulic piston, acts on the outer circumference of the clutch B.
The band brake is adjusted during assembly and does not require periodical maintenance during the life of the gearbox.

1. Drum
2. Band brake

Free wheels

The free wheels consist of two concentric tracks and a cage which encloses a set of asymmetrical pawls; these permit the relative rotation of the two tracks in one direction (A), while in the opposite direction the pawls lock, preventing relative rotation and provided a reaction torque.

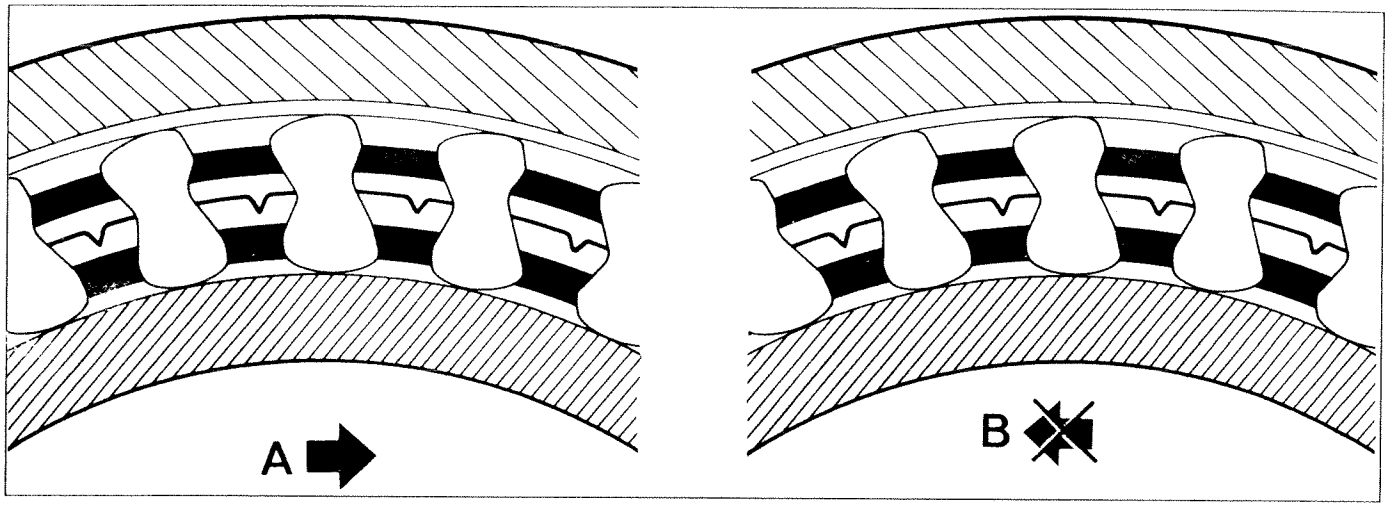

P3U09EB01

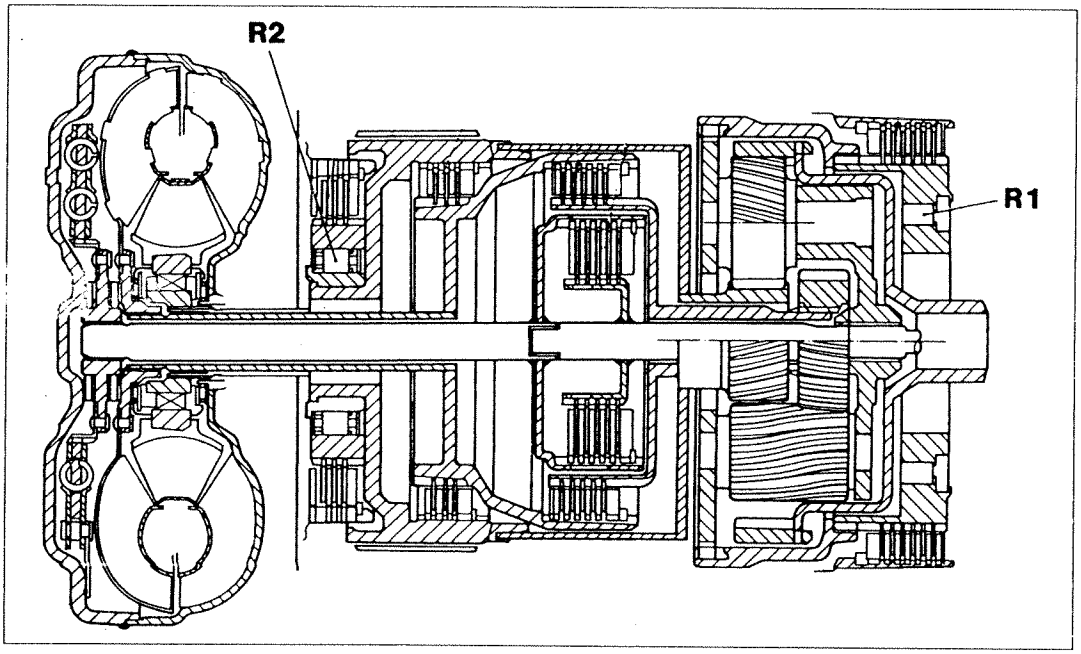

P3U09EB02

The roller clutch R1 prevents the anti-clockwise rotation of the gear train carrier T.
The roller clutch R2 prevents the anti-clockwise rotation of the sun gear P1, when the brake C is on.

HYDRAULIC CONTROL UNIT

The operation of the automatic transmission is rendered possible by controlling the clutches and brakes by means of hydraulic actuators, driven by special solenoids which move in accordance with commands issued by the control module. The supply is provided by a gear pump, whose rotation is driven directly by the engine through the torque converter.
A cooling radiator keeps the oil temperature within pre-established limits.

Copyright Fiat Auto

TRANSMISSION OF MOTION

The diagrams below illustrate the transmission of motion under the various driving conditions, stating the control components necessary for obtaining the various transmission ratios.
The following table gives the components activated depending on which gear is engaged and on the selector lever position.

SELECTOR LEVER POSITION		Clutches			Braking system			Free wheels	
		A	B	E	C	D	C'	R1	R2
P	PARK								
R	REVERSE		X			X			
N	NEUTRAL								
D	1st	X						X	
	2nd	X			X		X		X
	3rd	X		X	X				
	4th			X	X		X		
3	1st	X						X	
	2nd	X			X		X		X
	3rd	X		X	X				
2	1st	X						X	
	2nd	X			X		X		X
1	1st	X				X		X	

Neutral (selector lever on position **N**)

The main shaft rotates in a clockwise direction. All the clutches and multiple disc brakes are off, so motion is not transmitted to the epicyclic gearing and so to the output shaft.
The parking lock is off, so the vehicle starts moving if it is on a slope.

Park (selector lever on position **P**)

The only difference in relation to the previous condition is that the parking lock (P) is engaged, preventing the vehicle from setting off.

First gear (selector lever on position **1**)

The torque is transmitted through the torque converter and the shaft connected to it, by means of the clutch A, which controls the sun gear P2 by means of its specific shaft.
The brake D locks the gear train carrier T, preventing its rotation in both directions.
The sun gear P2 activates the long planet gears S2, which in turn engage with the short planet gears S1; these transmit motion to the crownwheel U which is connected to the output shaft.
The planet gears S1 rotate the sun gear P1 which, not constrained, rotates freely.

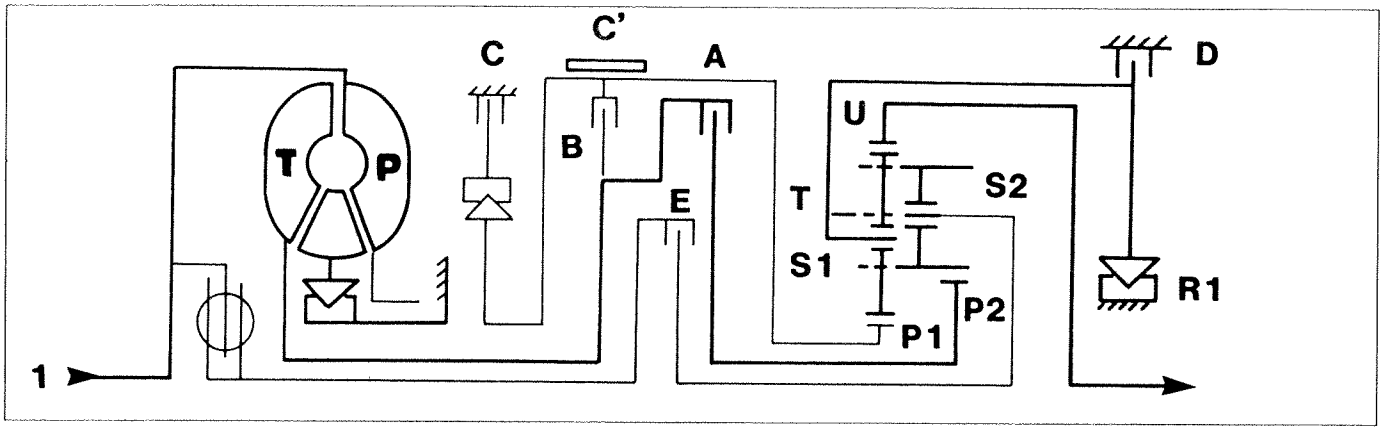

P3U11EB01

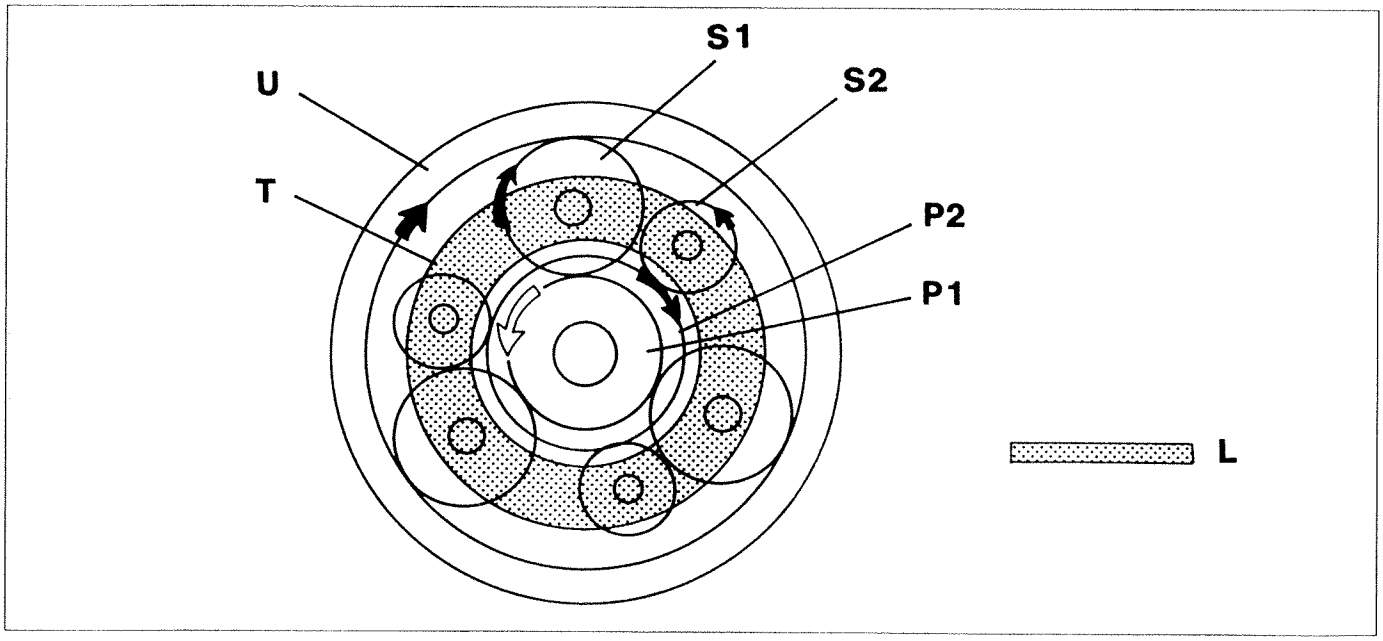

P3U11EB02

First gear (selector lever on position **D-3-2**)

With the selector lever on one of the three positions, the operation of the gearbox is similar, with the same transmission ratio, as that which takes place with the selector lever in position 1, with the sole difference that the gear train carrier T is not locked by the brake D.
Since the torque which acts on the crownwheel U is much higher than that which acts on the gear train carrier T; the latter would start rotating in an anti-clockwise direction, but the free wheel R1 prevents this rotation, allowing motion to be transmitted to the crownwheel U, as in the preceding case.
However, in this case there is no engine braking effect, as the gear train carrier T can rotate freely in a clockwise direction, allowing the crownwheel U a higher speed of rotation than that imposed by the transmission ratio.

Copyright Fiat Auto

21-27.

Second gear (selector lever on position **D-3-2**)

As with first gear, the sun gear P2 is operated by the main shaft and clutch A.
The sun gear P1 is locked by the multiple disc brake C and the band brake C'.
The free wheel coupling R2 is in the locked position.
The planet gears S2 engage with the planet gears S1, making them roll on the sun gear P1 which is kept still.
The transmission of motion continues, as for first gear, through the crownwheel U.
When the accelerator pedal is released, the driving force is transmitted by the wheels to the engine; this reversal of motion releases the free wheel R2 and the sun gear P1 is locked by the band brake C'.

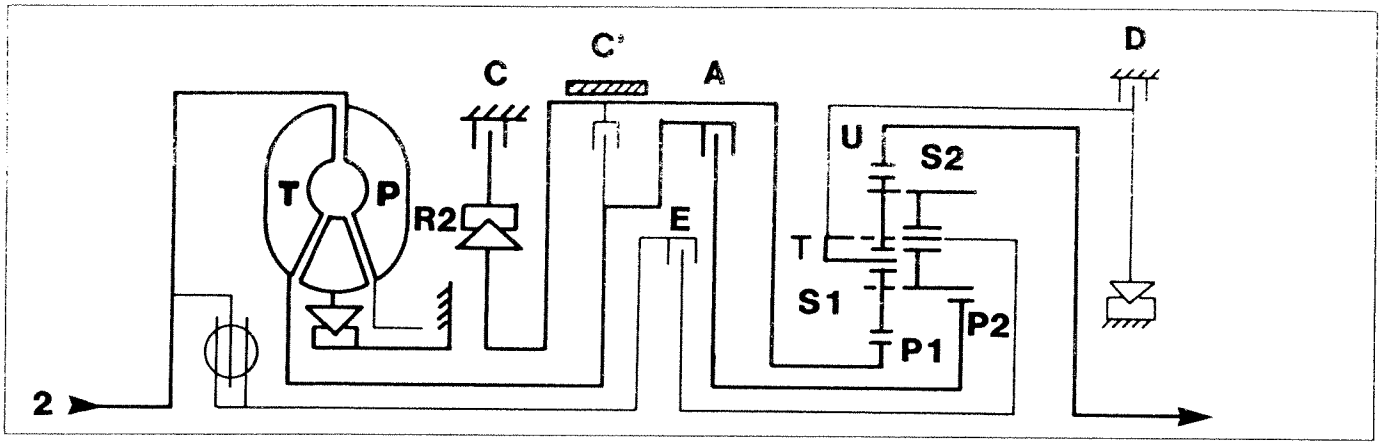

P3U12EB01

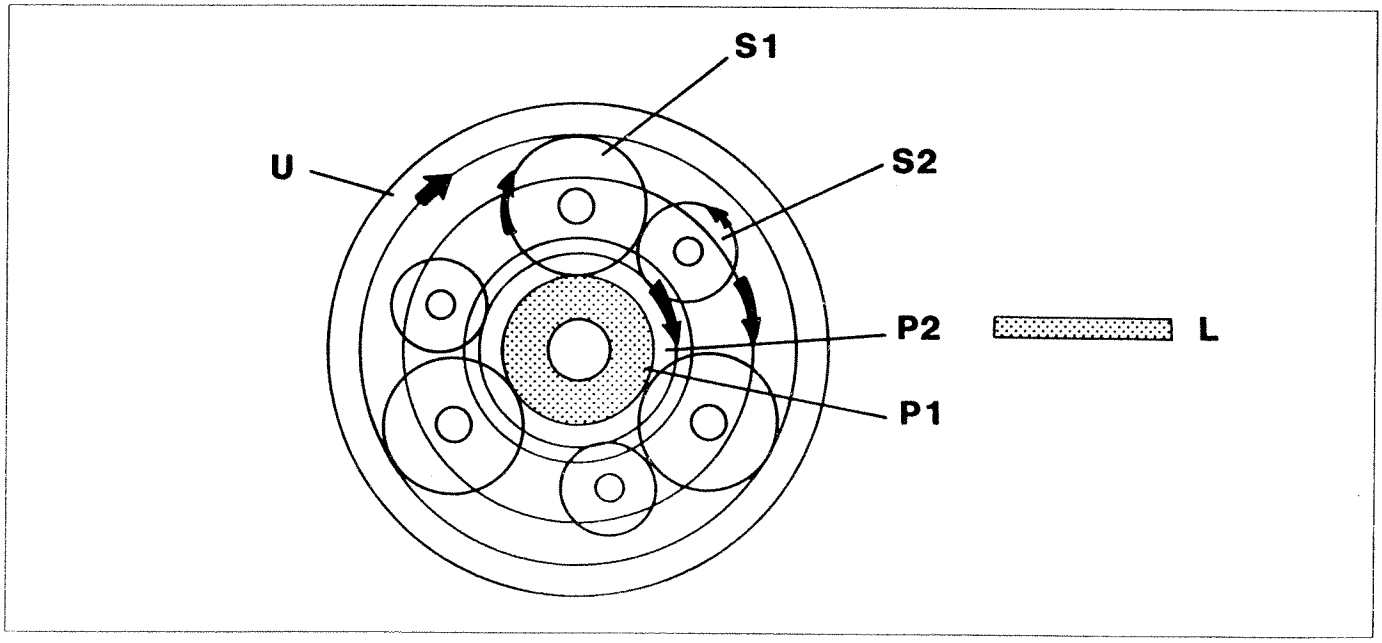

P3U12EB02

Third gear (selector lever on position **D-3**)

About 40% of the torque is transmitted hydraulically through the torque converter.
As with first and second gears, the motion is transmitted to the sun gear P2 through the main shaft and clutch A.
About 60% of the torque is transmitted mechanically through the engine and gearbox. This distribution of torque is determined by the components of the epicyclic gearing.
The motion is transmitted through the clutch E which enters into operation and connects the crankshaft to the gear train carrier T.
The sun gear P2 and gear train carrier T are thus operated simultaneously, so the transmission ratio of the epicyclic gearing is 1:1.
At working speed, when the turbine rotates at the same speed as the impeller, the sun gear P2 and gear train carrier T have the same angular speed: the planet gears S1 and S2 rotate, as if welded to each other, together with the sun gear P2.
The output shaft is still guided by the crownwheel U.

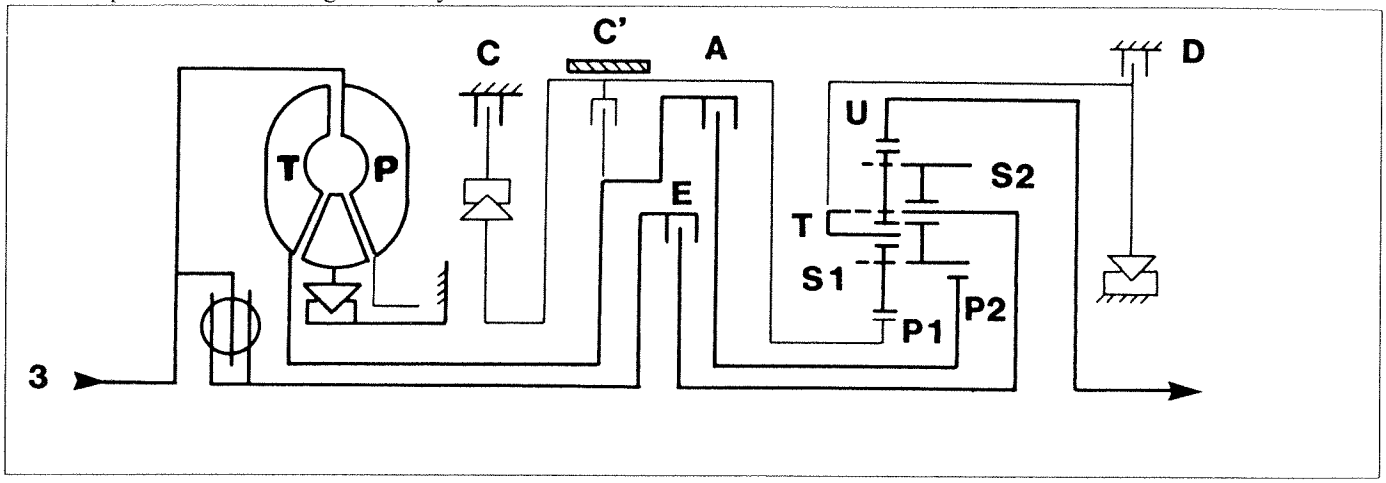

P3U13EB01

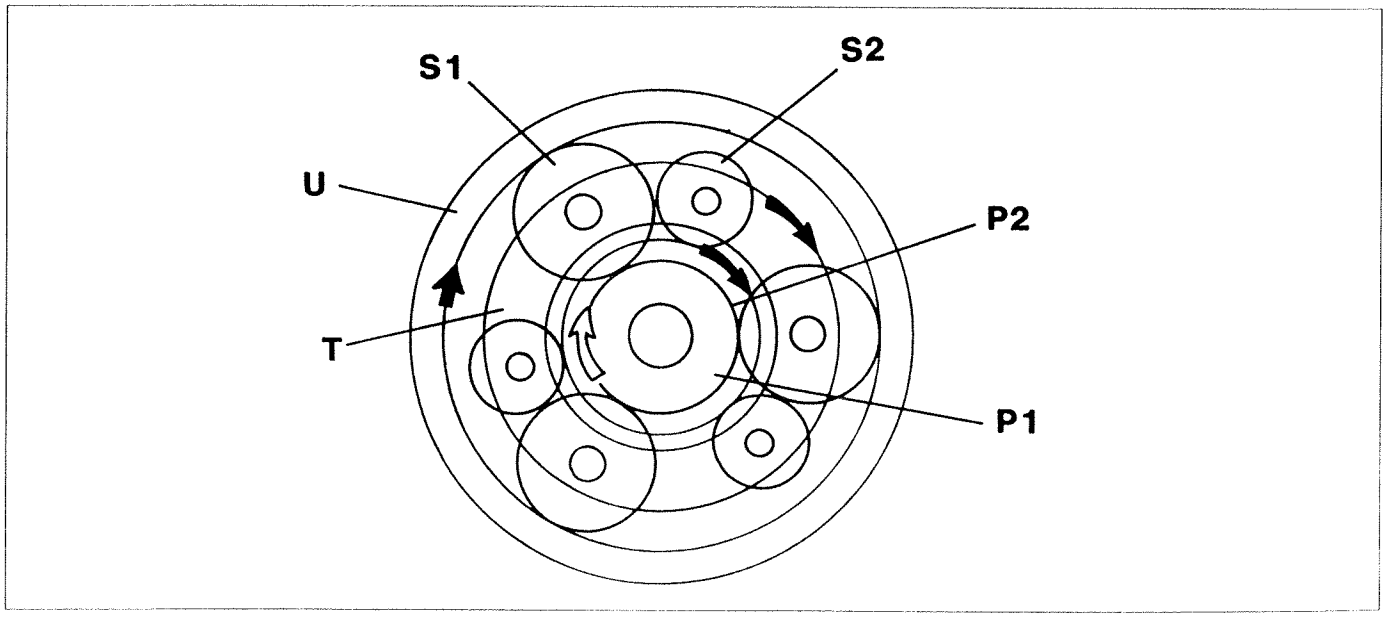

P3U13EB02

Copyright Fiat Auto

Fourth gear (selector lever on position **D**)

The motion is transmitted by means of clutch E from the crankshaft to the gear train carrier T.
The sun gear P1 is locked by the band brake C'. The planet gears S1 thus rotate on the sun gear P1 and drive the output shaft by means of the crownwheel U.

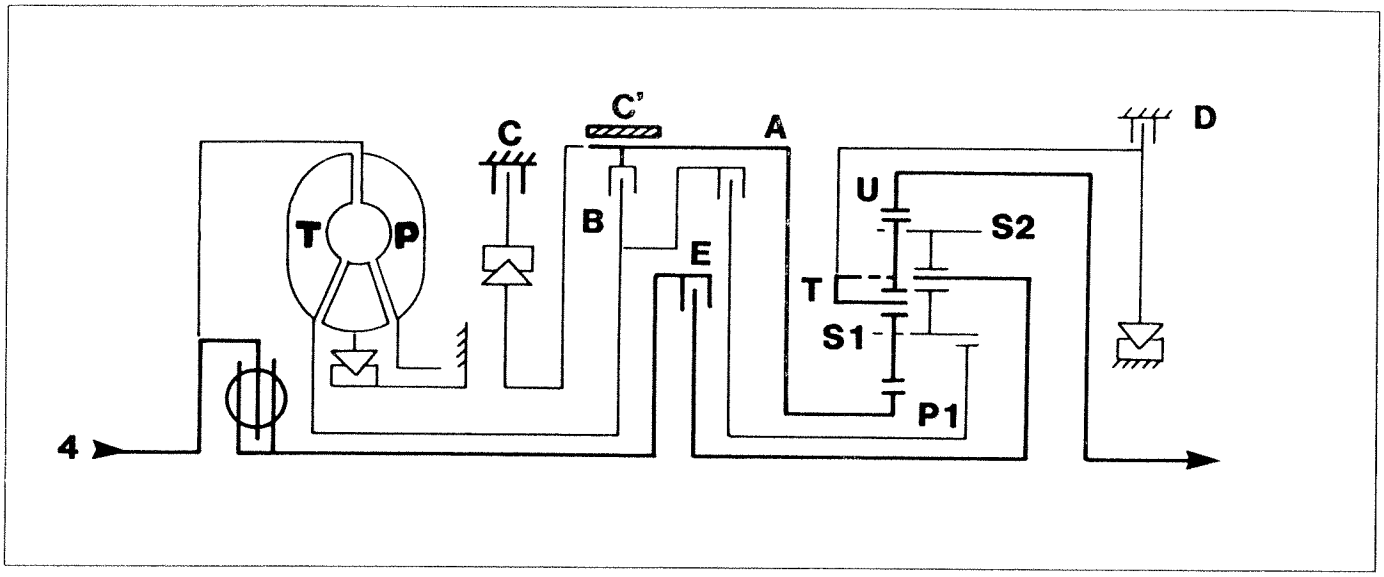

P3U14EB01

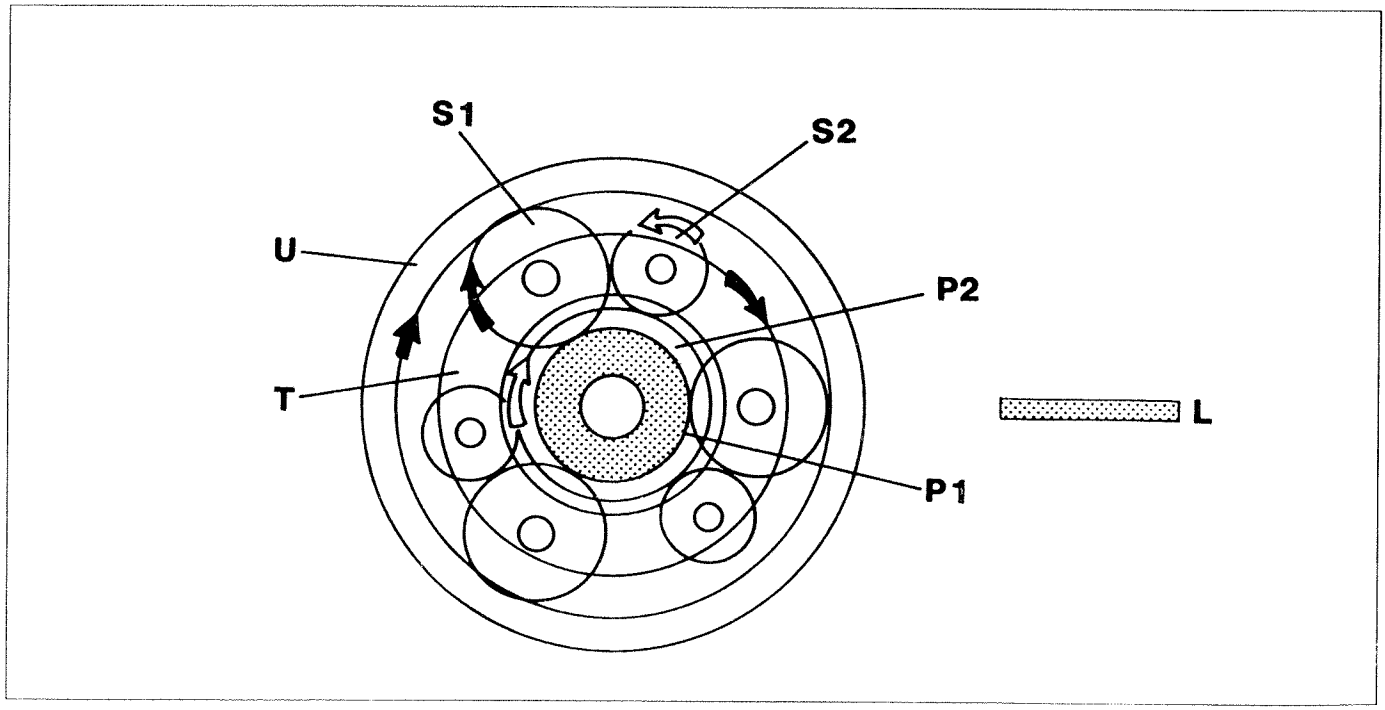

P3U14EB02

Reverse (selector lever on position **R**)

The clutch B is operated, which transmits motion from the main shaft to the sun gear P1. The brake D is also operated, which locks the gear train carrier T.
The free wheel R1 is not in the locked position, as the transmission of motion takes place in the reverse direction in relation to first gear (position D).
The planet gears S1 reverse the direction of rotation between the sun gear P1 and crownwheel U, which in this way makes the output shaft rotate in the opposite direction.

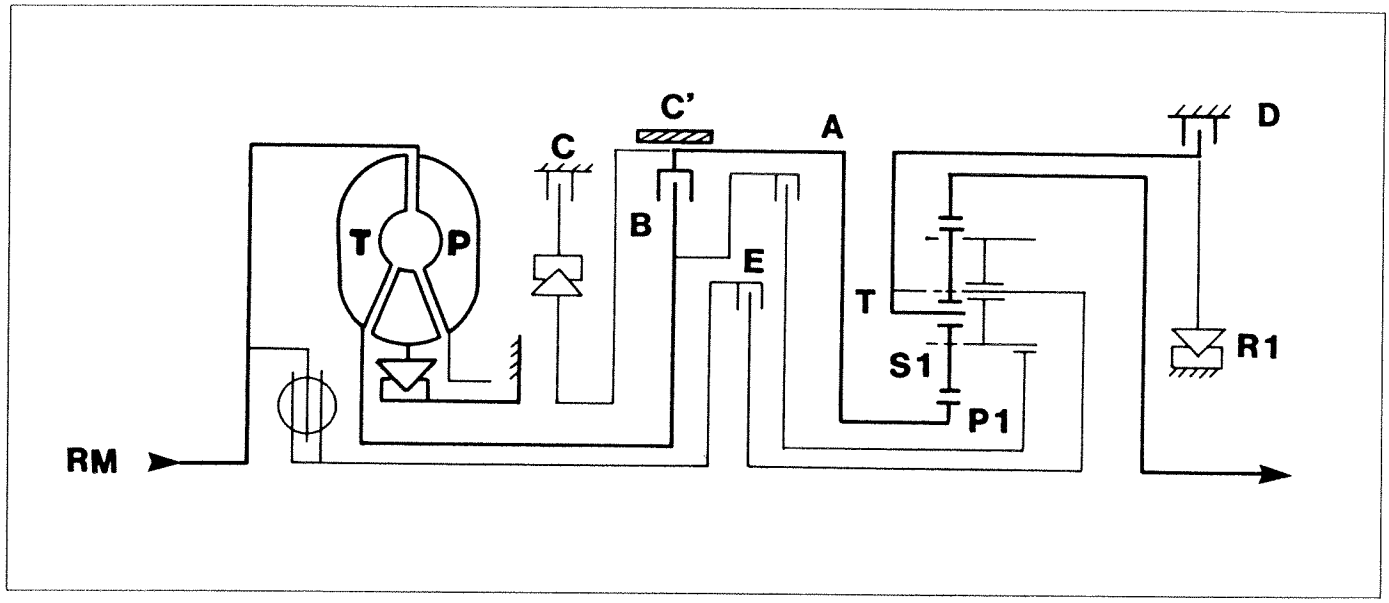

P3U15EB01

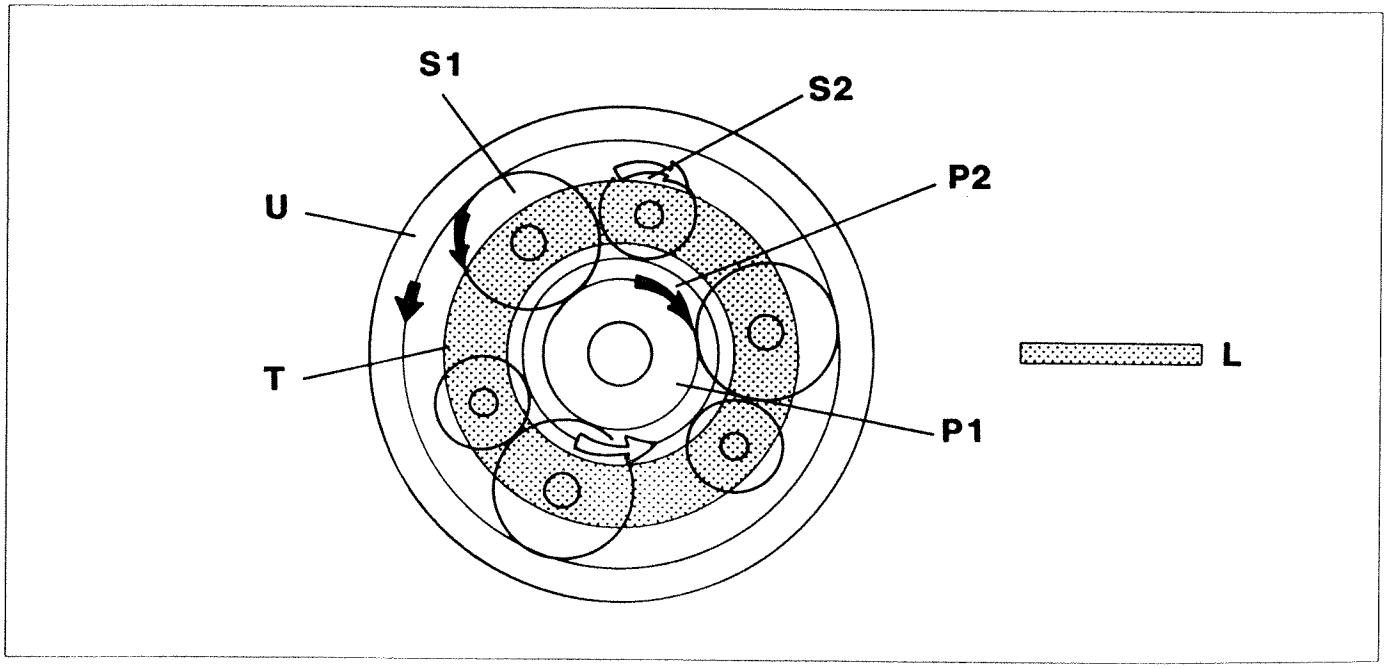

P3U15EB02

Copyright Fiat Auto

CONTROL SYSTEM

The control system of the ZF automatic transmission consists of the transmission control module (TCM), some switches and sensors which inform the control module of the various operating conditions and four actuators (solenoids MV1, MV2 and MV3 for actuating gear changes and DRP for controlling the main pressure) which receive commands from the TCM and interact with the hydraulic control system to obtain correct operation of the gearbox.
The TCM also sends signals to the instrument panel and exchanges information with the fuel injection/ignition control unit and the diagnostic socket.

Location on car of components of the ZF 4HP-18EH automatic transmission control system

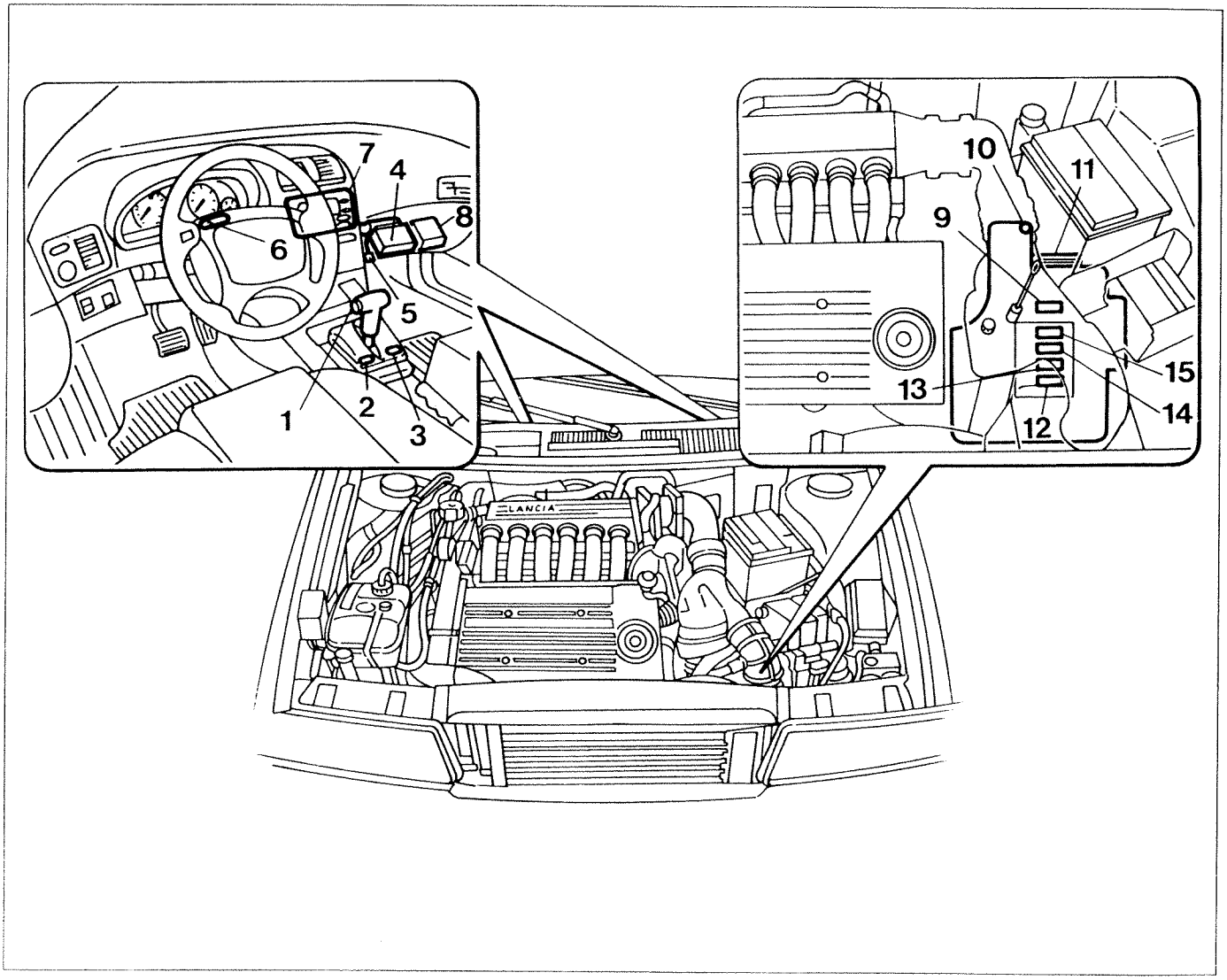

P3U16EB01

1. Selector lever
2. NORMAL/POWER mode switch
3. ICE mode switch
4. Transmission control module (TCM)
5. Diagnostic socket
6. Instrument panel
7. Infocenter
8. Fuel injection/ignition control unit
9. Gearbox oil temperature sensor
10. Vehicle speed sensor
11. Selector lever position sensor
12. Gear engagement solenoid MV1
13. Gear engagement solenoid MV2
14. Gear engagement solenoid MV3
15. Pressure control solenoid DRP

TRANSMISSION CONTROL UNIT

The transmission control unit (TCM) contains the electronic control logic of the automatic transmission, in which the various functions are memorized, and is located under the dashboard on the passenger side.
The TCM receives information concerning the operation of the automatic transmission from the various switches and sensors located on the gearbox and dashboard, and manages the exchange of information with the fuel injection/ignition circuit.
On the basis of the signals received, the TCM processes and issues the appropriate commands to the four solenoids located at the top of the automatic transmission, for effecting gear changes, and to the fuel injection/ignition control unit for reducing the driving torque.
The TCM also manages the displays on the instrument panel.

Functions of the transmission control module

On the basis of the commands received from the driver via the various switches and the signals coming from the sensors concerning the operating conditions, the control module ensures correct operation of the gearbox by means of the following functions:
- actuation of gear changes;
- implementation of driving mode;
- variations of hydraulic pressures;
- communication with the Motronic M3.7 fuel injection-ignition system;
- safety function;
- display of data on instrument panel;
- self-test function.

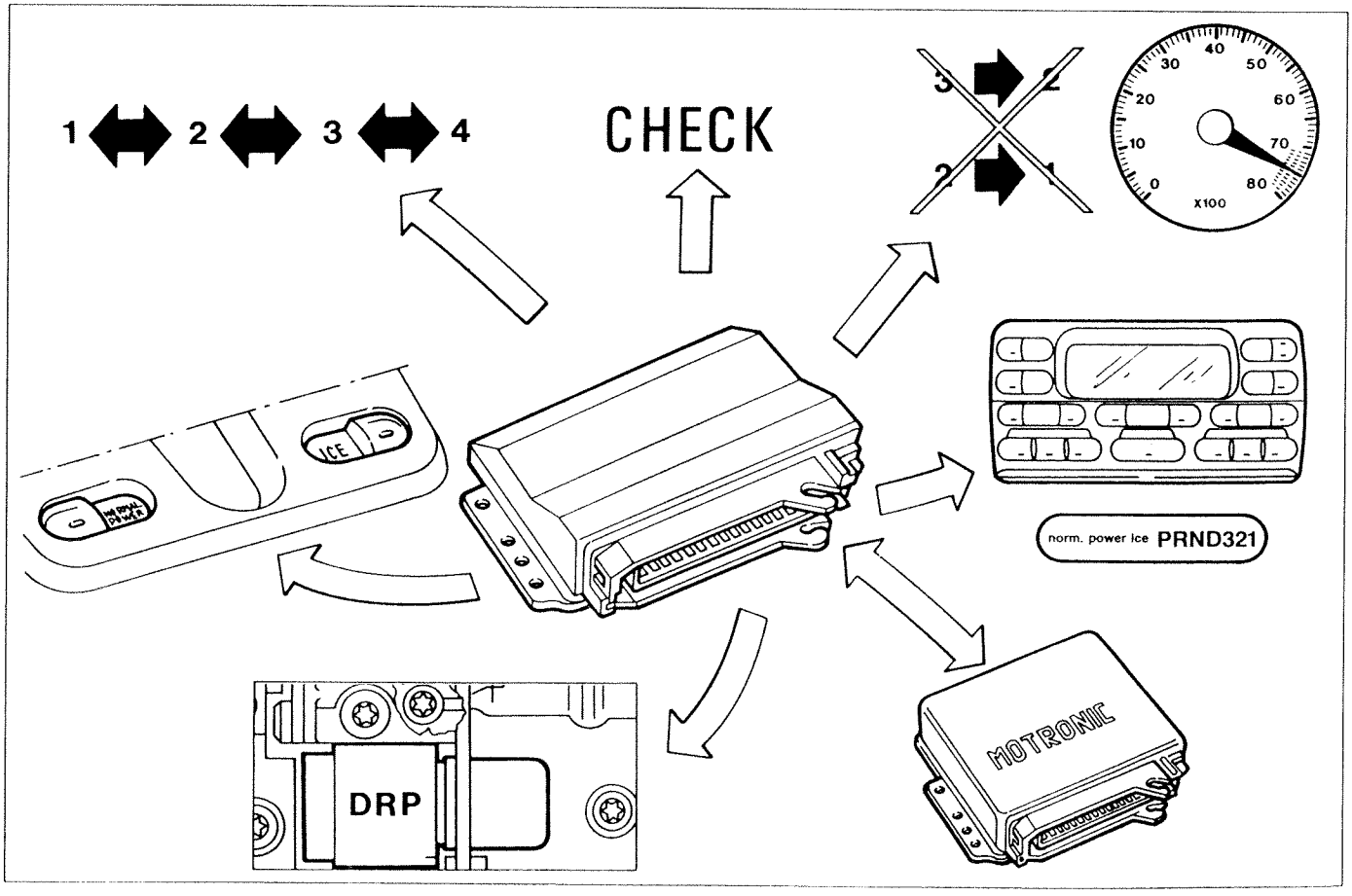

P3U17EB01

Copyright Fiat Auto

Wiring diagram of input and output information to/from the TCM

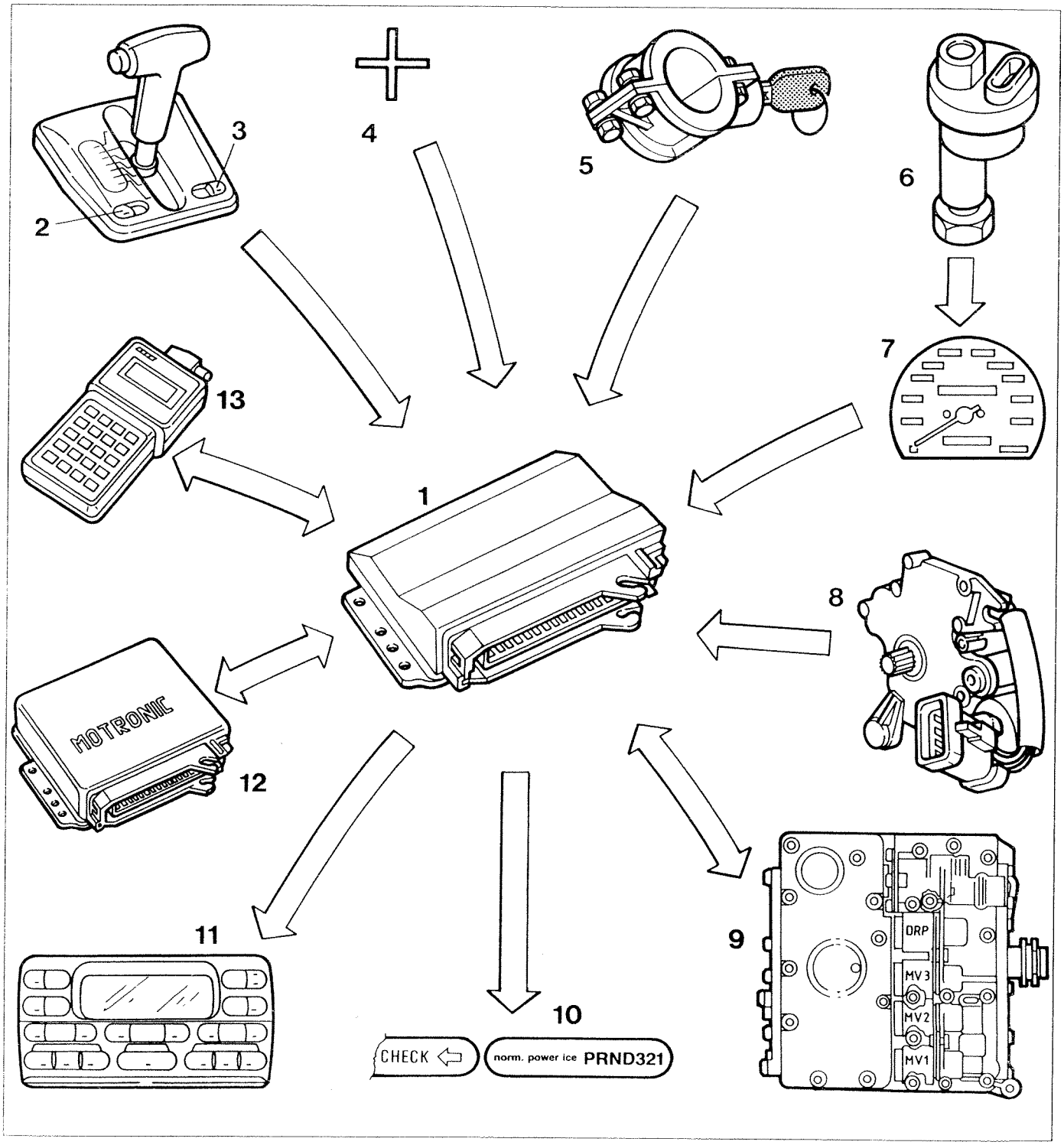

1. Transmission control module (TCM)
2. NORMAL/POWER mode switch
3. ICE mode switch
4. Battery voltage
5. Ignition switch
6. Vehicle speed sensor
7. Speedometer
8. Selector lever position sensor
9. Electrohydraulic unit with gearbox oil temperature sensor
10. Instrument panel
11. Infocenter
12. Fuel injection/ignition control unit
13. Diagnostic socket

Identification of control module connections

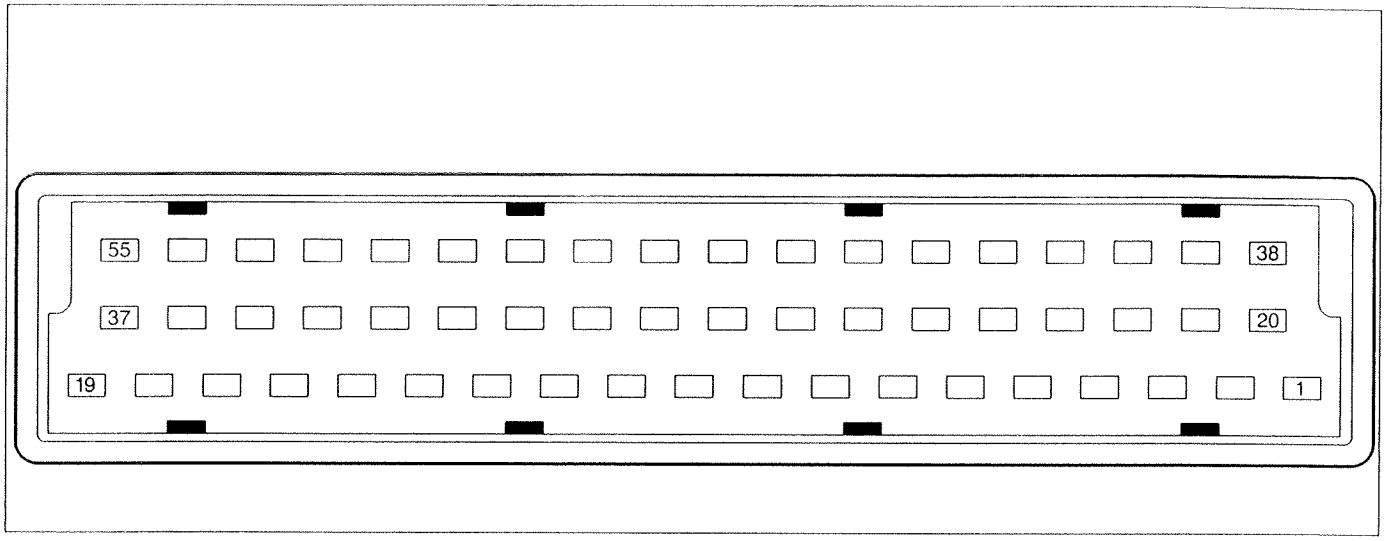

P3U19EB01

view of side of control module connector

Pin	Connection	Pin	Connection
1	Key-dependent positive (IGN.ON)	29	NORMAL/POWER mode switch
2	NC	30	NC
3	Fuel injection/ignition control unit (engine rpm signal)	31	Instrument panel display (fault indicator)
4	NC	32	Fuel injection-ignition control unit (Torque reduction N° 1)
5	MV1 solenoid control		
6	DRP solenoid control	33	Selector lever position sensor (Z)
7	Signal earth	34	NC
8	NC	35	NC
9	(Mapping socket) NU	36	NC
10	ICE mode switch	37	NC
11	NC	38	Instrument panel (vehicle speed signal)
12	NC		
13	NU	39	Battery positive
14	Selector lever position sensor (Y)	40	NC
15	Diagnostic socket (line L)	41	NC
16	Insrument panel display (high oil temperature)	42	Solenoid MV3 control
		43	NC
17	NC	44	Gearbox oil temperature sensor (-)
18	NC	45	NC
19	Solenoid supply	46	Gearbox oil temperature sensor (+)
20	NC	47	Fuel injection/ignition control unit (throttle position signal)
21	Fuel injection/ignition control unit (engine load signal)	48	NC
22	NC	49	Instrument panel display (driving mode)
23	NC		
24	MV1£2 solenoid control	50	Selector lever position sensor (X)
25	Fuel injection/ignition control unit (torque reduction N° 2)	51	Diagnostic socket (line K)
		52	NC
26	Power earth	53	NC
27	NC	54	NC
28	(Mapping socket) NU	55	NC

Copyright Fiat Auto

PRINCIPLES OF OPERATION

Gear changes

The change from one gear to the next gear up or down depends on the position of the accelerator pedal, the vehicle speed, the characteristic engine parameters and the selected driving mode.
The control module sends a control signal to the solenoids MV1, MV2 and MV3 contained in the electrohydraulic unit.
These permit or prevent oil from reaching the brakes and clutches necessary for achieving the various transmission ratios, changing between their ON/OFF conditions as stated in the table below.
A power relay located inside the control unit jointly supplies the set of four solenoids.

Gear	MV1	MV2	MV3
P	OFF	ON	ON
R	OFF	OFF	OFF
N	OFF	ON	ON
D-1st	OFF	ON	OFF
D-2nd	ON	ON	OFF
D-3rd	ON	OFF	OFF
D-4th	OFF	OFF	OFF

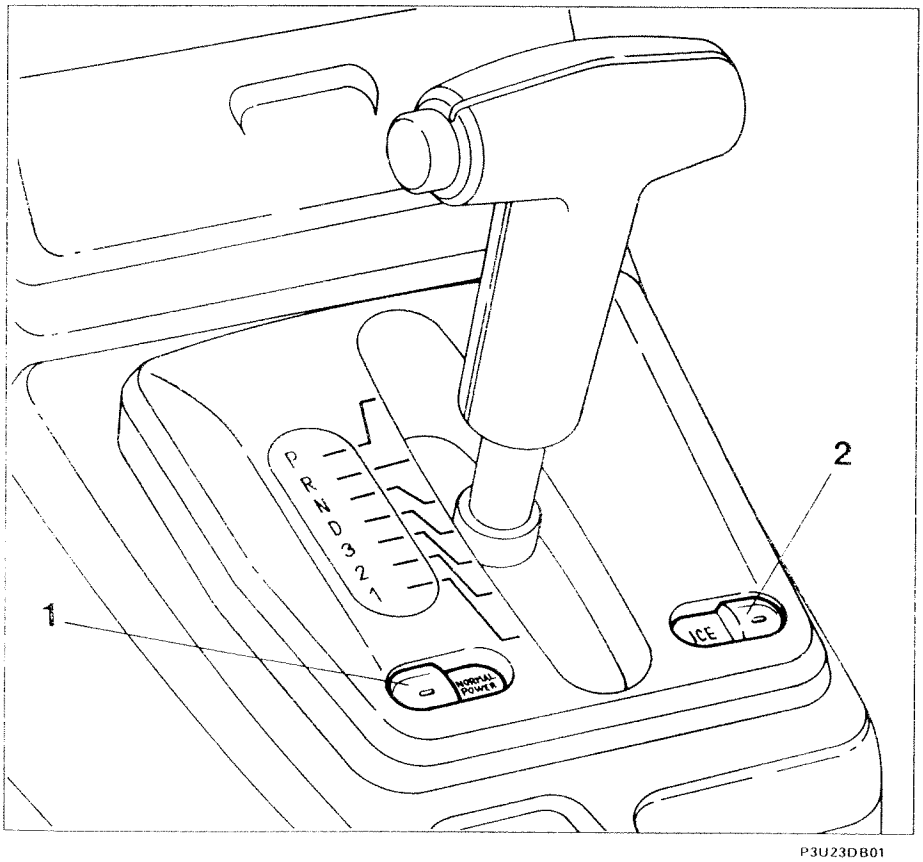

P3U23DB01

Implementation of driving mode

The control module is designed to control the operation of the automatic transmission in accordance with three different driving modes, which enable the driver to select the different capabilites of the automatic transmission in accordance with the momentary requirements for use:
- NORMAL for obtaining maximum driving comfort, while reducing fuel consumption to a minimum;
- POWER to obtain maximum performance from the vehicle;
- ICE to increase driving safety on slippery roads.

1. NORMAL/POWER button switch
2. ICE button switch

When the car is started, the system is set to the last selected mode.
When the NORMAL/POWER (1) button is pressed, the mode is changed over from NORMAL to POWER or vice versa.
When the ICE button (2) is pressed, the system uses the ICE mode, excluding the other two modes. When the ICE button is pressed again, the previously selected NORMAL or POWER mode is resumed.

The driver can change from one mode to the other at any time during driving.
The selected mode is displayed beside the indication of the position of the selector lever on the instrument panel.

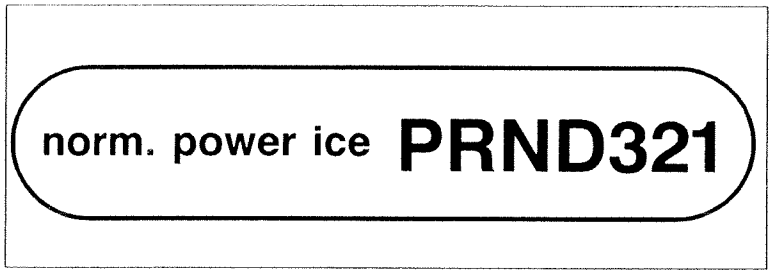

P3U23DB02

Display of the operating mode used and the selector lever position

The table below illustrates the ratios which the gearbox uses automatically during driving of the vehicle, in relation to the driving mode used and the position of the selector lever, and shows the transmission ratio used to start with.

Selected driving mode	Selector lever position	Selected ratio to start	Automatic management 1 2 3 4
NORMAL or POWER	D	1st	
	3	1st	
	2	1st	
	1	1st	
ICE	D	2nd	
	3	2nd	
	2	2nd	
	1	2nd	

P3U21EB01

The following pages describe the behaviour of the ZF automatic transmission depending on the driving mode (NORMAL, POWER or ICE) used.
The characteristic curves of change between the four ratios are shown, for both increase and decrease of the ratio (gradual), expressed in relation to the percentage of aperture of the throttle valve and the vehicle speed.

Copyright Fiat Auto

Operation in NORMAL mode
This operating mode ensures very gentle operation, aimed at comfortable driving and balanced management of consumption, with engagement of gears at relatively low speeds.

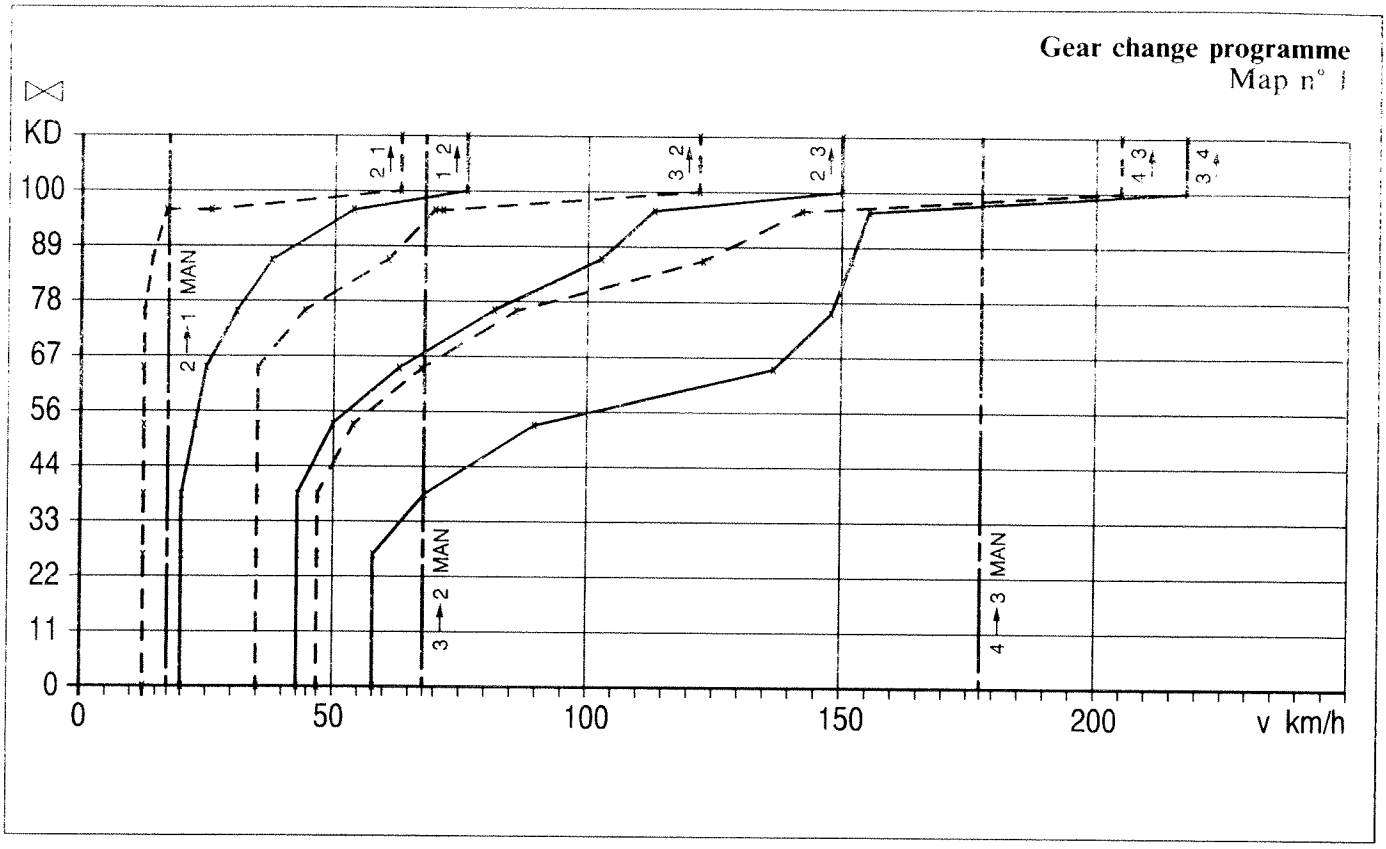

A gentle departure is ensures, with immediate change to second gear, to avoid whistling of the sun gear of the epicyclic gearing.
Good acceleration is possible thanks to the choice of final transmission ratio.
The higher gears are engaged at much lower speeds than in the POWER programme, at the same throttle valve aperture.
The 4th ratio (transmission of power solely mechanical) is already ensured at 60 km/h.

During use of the NORMAL mode, the control module activates the DSP electronic function *(Dynamic Shift Program)* which monitors a set of parameters:
- throttle pedal position;
- engine rpm;
- acceleration;
- deceleration;
- engine load variation;
- selector lever position;
- wheel skidding.

The system works out a *sport coefficient* in accordance with which the driving mode is changed, using five different maps to change from a lower to a higher sporty mode.
Changing from map n° 1 to map n° 5, each gear works at an increasingly higher speed, exploiting all the power of the engine in order to cope with changes in engine load due to road gradient, towing of a trailer or other particular driving requirements.

NOTE *Only maps n° 1 (on this page), n° 3 and n° 5 (next page) have been shown. Maps n° 2 and n° 4 are intermediate in relation to those shown.*

Gear change programme
Map n° 3

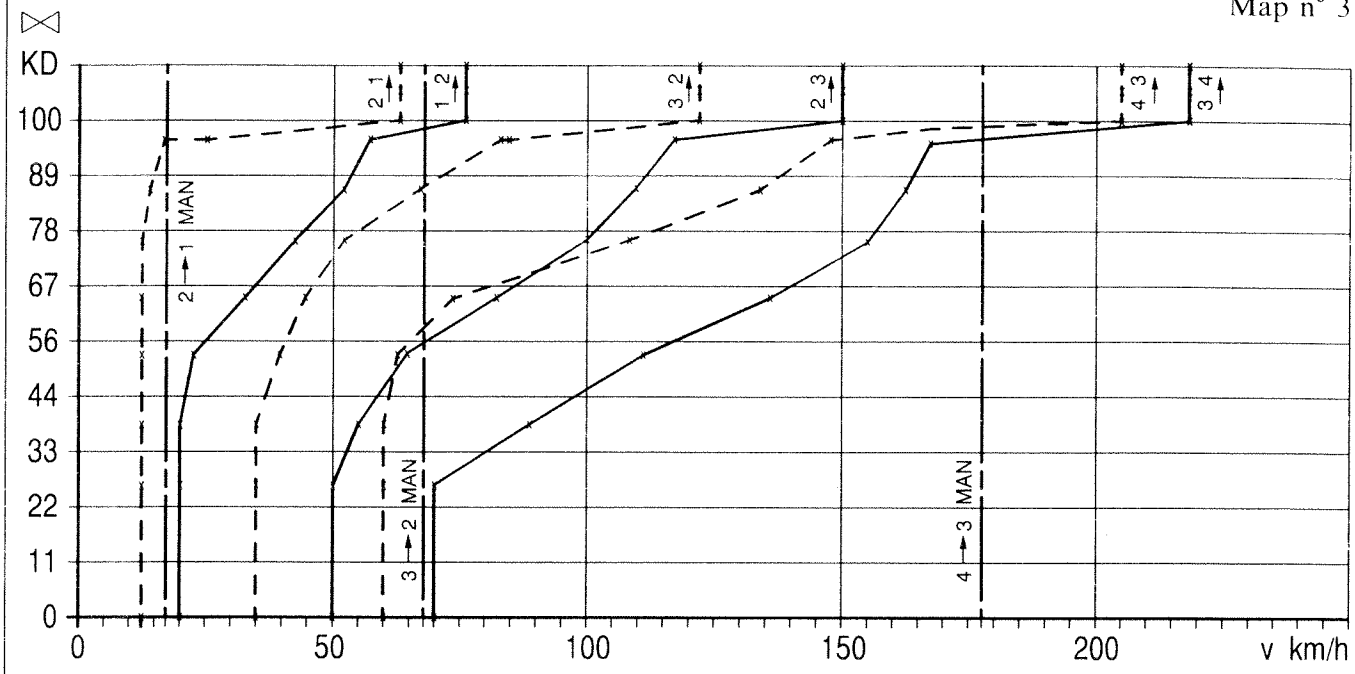

P3U23EB01

Gear change programme
Map n° 5

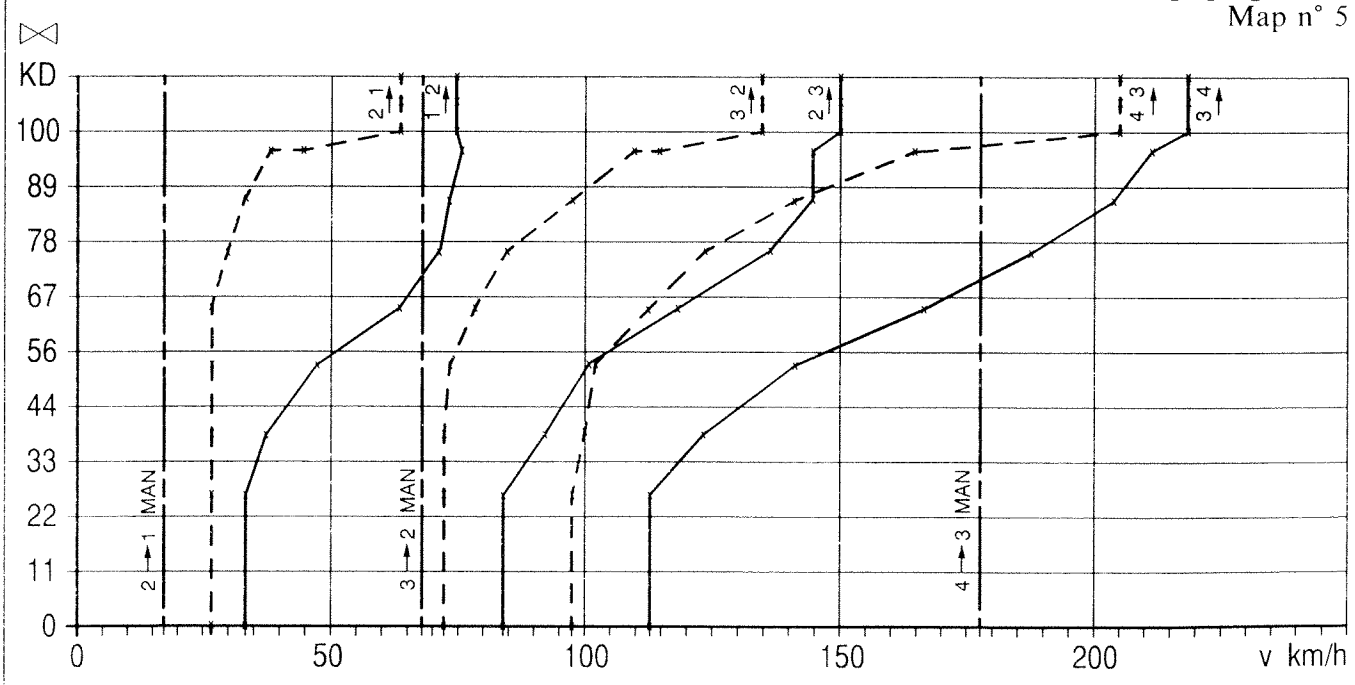

P3U23EB02

Copyright Fiat Auto

Operation in POWER mode
This gearbox mode is designed for full exploitation of power, in order to obtain maximum performance of the vehicle; at the same throttle valve aperture, the changes to the higher ratios are automatically shifted to a higher rpm.

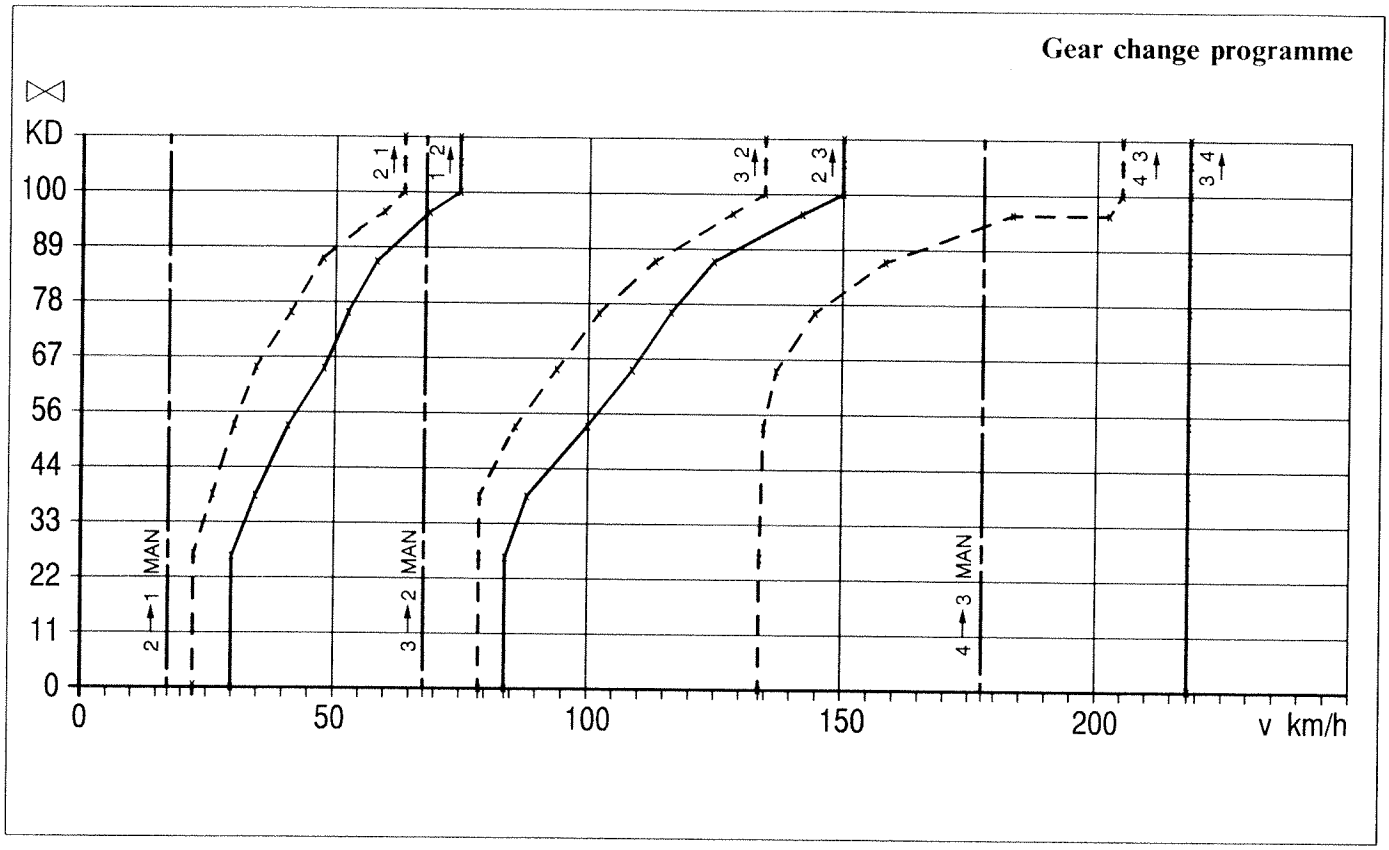

One of the special features of automatic transmissions also occurs, involving to the change to the higher ratio at the first sign of release of the accelerator pedal.
This is especially appreciated downhill, where it is important to retain the shortest ratio to ensure good engine braking and so less brake fatigue.

The control module switches on POWER mode when the NORMAL/POWER switch located on the left of the selector lever is pressed.

The POWER mode is excluded in the following cases:

1. the NORMAL/POWER button is pressed again;
2. the ICE button is pressed;
3. operation under recovery conditions.

Operation in ICE mode
This strategy is used to improve driving safety under particular conditions, such as driving on slippery roads, to facilitate setting off during starting.

Gear change programme

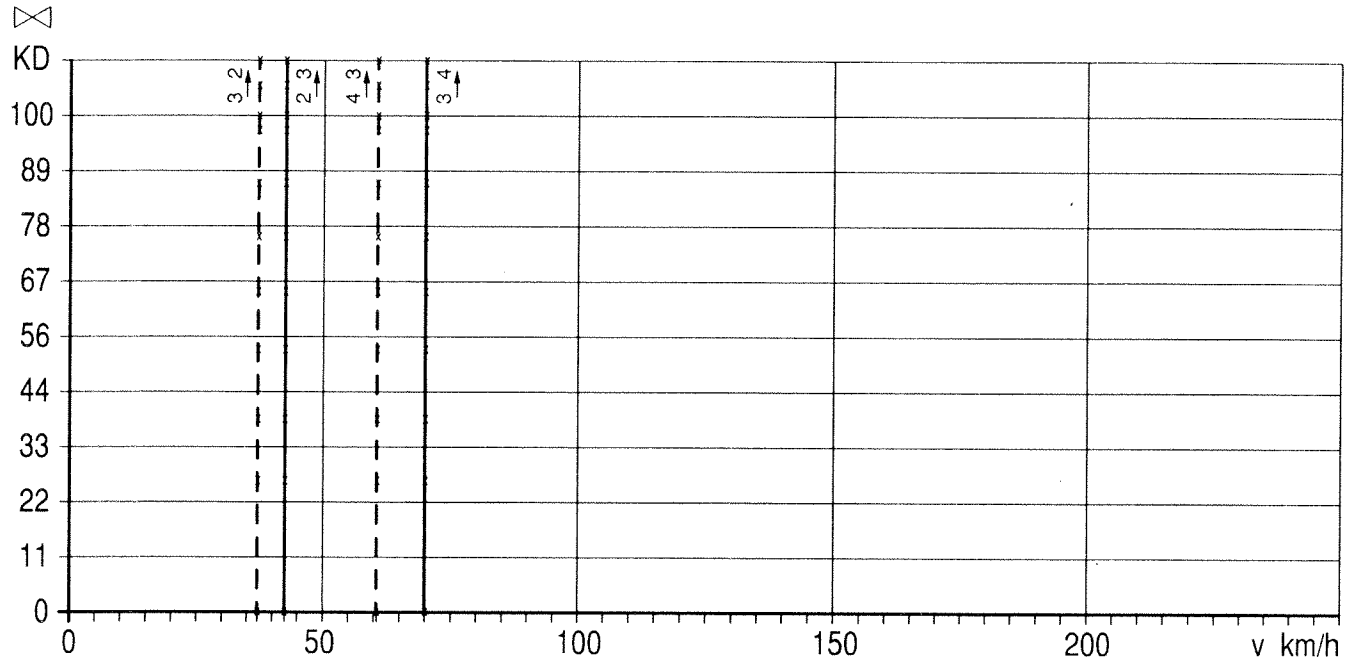

P3U25EB01

For this reason only the 2nd, 3rd and 4th speeds are selected.
The car sets off in 2nd gear and only changes to higher gears in relation to the speed reached by the car, and not by the accelerator pedal position: **consequently the function for changing down during acceleration (kick-down) is excluded.**

If this programme is selected during urban use, it permits very gradual and gentle use of the car. Moreover, a saving in fuel consumption is obtained, thanks to the lower number of gearchanges carried out. However there is only limited engine braking as first gear is never selected.

The ICE mode can be seleted by pressing the ICE button on the right of the selector lever.

The ICE operating mode is excluded in the following cases:
1. if the ICE button is pressed again;
2. operation under recovery conditions.

Copyright Fiat Auto

Hydraulic pressure changes

The transmission control module regulates the pressure of the hydraulic system by the DRP solenoid, in order to ensure precise control of the quality of gear engagement in terms of both driving comfort and reliability of operation.
By modulating the pressure of the oil in the gear engagement circuits, the engagement times are optimized to achieve the best compromise between precision of the gear change and wear of the friction components (friction linings); in practice it improves the smoothness of action and the life of the unit (reliability of operation).

The control of the DRP solenoid is expressed as a result of a processing operation which, for each gear and in real time, takes account of several parameters such as:
- rpm;
- type of change;
- throttle valve position;
- engine load;
- vehicle speed;
- torque converter multiplication factor;
- difference in speed between pump and turbine at the time of engagement.

The pressure value calculated in real time by the control module is further corrected in relation to the gearbox oil temperature. This makes it possible to compensate for changes in hydraulic behaviour of the system as the oil density in the operating circuits changes.
An NTC sensor located in the solenoid assembly constantly detects the oil temperature; for temperatures of below 52°C, the control unit corrects the modulation pressure, calculated in accordance with the graph opposite.

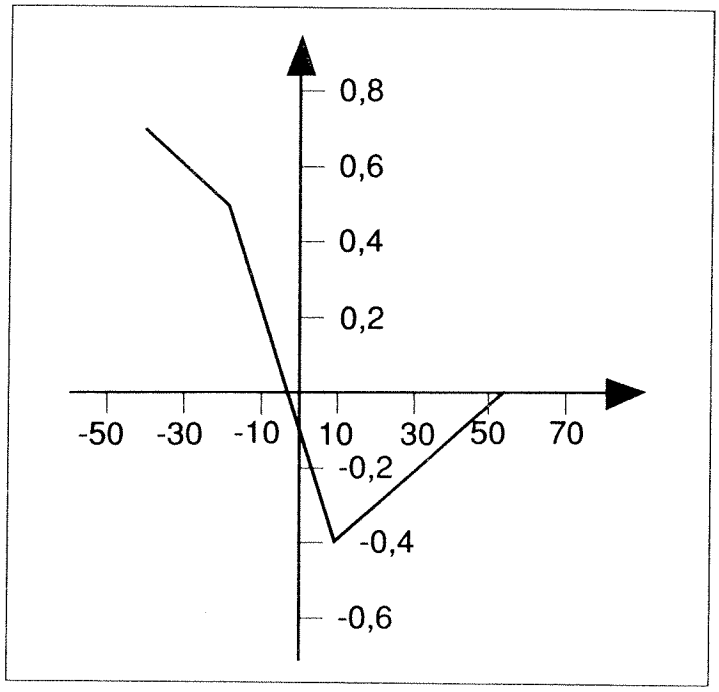

P3U26EB01

Correction of modulation pressure in accordance with temperature

An optimum duration for the gear change is defined in relation to the precision of the gear change and the consumption of the friction components. If the mechanical action were to take place in less time, the gear change would be less smooth, whereas in greater time, there would be greater wear of the friction linings.
The optimum duration of the gear change is memorized in the control module in a non-volatile manner by means of appropriate maps. These maps link the optimum engagement time with the type of gear change (1st→ 2nd, 2nd→ 3rd or 2nd→ 1st etc.) and the transmission speed.
In all gear change situations, the control module can calculate the necessary pressure to effect the complete gear engagement in the time considered to be optimum. During the gear change, to obtain the desired result, the control unit further modulates the pressure, acting in real time. By monitoring the engine rpm and transmission speed simultaneously, it checks the actual performance of the gear change and consequently varies the increase in operating pressure.

The control module also implements an adaptive check on pressure; this is for compensating for the often frequent tolerances and variations to which the components and parameters involved in gear changes are subject. In particular, the friction coefficients of the clutches, the engine performance and the oleodynamic and mechanical characteristics of the pressure control components may change.
During the gear change pressure calculation, an additional graph is calculated in which the corrective pressure values are memorized (to be added algebraically to the determined value) which depend on the type of gear change and speed.
The adaptive algorithm corrects the pressure value in steps of ± 0.1 bar, up to a maximum of ± 0.5 bar, conducting comparisons on the delays or advances in relation to the optimum engagement times.

Communication with the Motronic M3.7 fuel injection/ignition system

The transmission control module (TCM) receives information from the Motronic fuel injection/ignition control unit concerning the rpm, angle of aperture of the throttle valve, engine temperature and engine load. In addition, at every gear change a signal is sent to the fuel injection control unit to request a reduction of the driving torque, to facilitate engagement.

Engine rpm signal
The engine rotation speed signal (obtained from the inductive sensor) is processed by the Motronic control unit and is supplied to the transmission control module (terminal 3) as frequency information.
The signal is used as a calculation parameter for the modulation pressure, for the check protecting against over-revving (*upward changes* not permitted) and for checking the reduction of the driving torque.

Throttle valve position signal
The Motronic control unit informs of the angle of aperture of the throttle valve with a PWM *(Pulse Wide Modulation)* variable duty cycle signal. The information is transferred to terminal 46 of the transmission control module. The signal, which comes from the potentiometer installed coaxially in relation to the throttle valve, is used to determine the gearchange points in accordance with the vehicle speed and the driving mode selected by the driver.
The calculation of the modulation pressure also takes account of this factor.

Coolant temperature signal
On the same line used to communicate the throttle valve position, but with a double-frequency PWM signal, the Motronic control unit communicates the coolant temperature at every starting. This signal is used by the transmission control module to manage correctly the engine load signal (basic injection time) coming from the Motronic fuel injection/ignition control unit. This signal is not used when the engine is cold, as under this condition it is not truly representative of the load.

Engine load signal
The engine load signal, expressed as aperture time of the fuel injectors, is used for calculating the modulation pressure. The signal reaches the transmission control unit on terminal 21. The control module divides the engine load in accordance with three levels: low, medium and high.

Driving torque reduction signal
During gear changes, the transmission control module asks the Motronic control unit to reduce the driving torque by retarding the ignition in order to facilitate and speed up the operation. This signal (an earth) is issued by the transmission control unit on two lines on terminals 25 and 32.

Safetye function

The control module prevents the engagement of lower gears (even if the selector lever is moved manually) until the vehicle speed has dropped below certain values, in order to prevent dangerous *over-revving* of the engine.

Copyright Fiat Auto

Data display on instrument panel

The control module supplies to the instrument panel the coded logic signals necessary for activating the words NORMAL, POWER and ICE on the display, and for displaying fault messages on the Infocenter with the CHECK red warning light coming on at the same time.
These indications are supplied via three lines, leading to terminals 49, 16 and 31 of the control module's connector. The table below shows the coding used.

Line 1	Line 2	Line 3	**Indication**
Pin 49	Pin 16	Pin 31	
1	0	1	NORMAL
1	0	0	POWER
1	1	0	ICE
0	1	1	Fault indicationa (auto trans. warning light comes on)
0	1	1	Temperature alarm
0	0	1	N + temperature alarm
0	0	0	P + temperature alarm
0	1	0	I + temperature alarm

0 = Low
1 = High (+12V)

Logic signals outgoing from the transmission control module, for activating the indication of the selected driving mode and for displaying fault messages on the Infocentre

Self-test function

The auto transmission control module (TCM) has a self-test function, divided into three stages corresponding to the three operating situations:
- turning the key to the ignition "ON" position;
- starting the engine;
- during driving.

The self-test function constantly monitors the sensors, solenoids and all the other electronic components, in order to detect faults and malfunctions immediately. These errors are stored in the control module's memory and can be read using the FIAT/LANCIA Tester.

Memorization of errors

In the case of major faults, the red CHECK warning light (1) on the instrument panel begins to flash, and the relevant error message is displayed for 60 seconds on the display of the Infocenter (2); when the fault is memorized, the red CHECK warning light (1) stays on permanently.
In the case of gearbox oil temperature exceeding 150°C, the red CHECK warning light continues to flash.

For every error the control module memorizes:
- the component which caused the error (e.g. pressure control solenoid);
- classification of the error (Present or Intermittent);
- the type of error (A.C./D.C. GND/D.C. Vbatt/etc.).

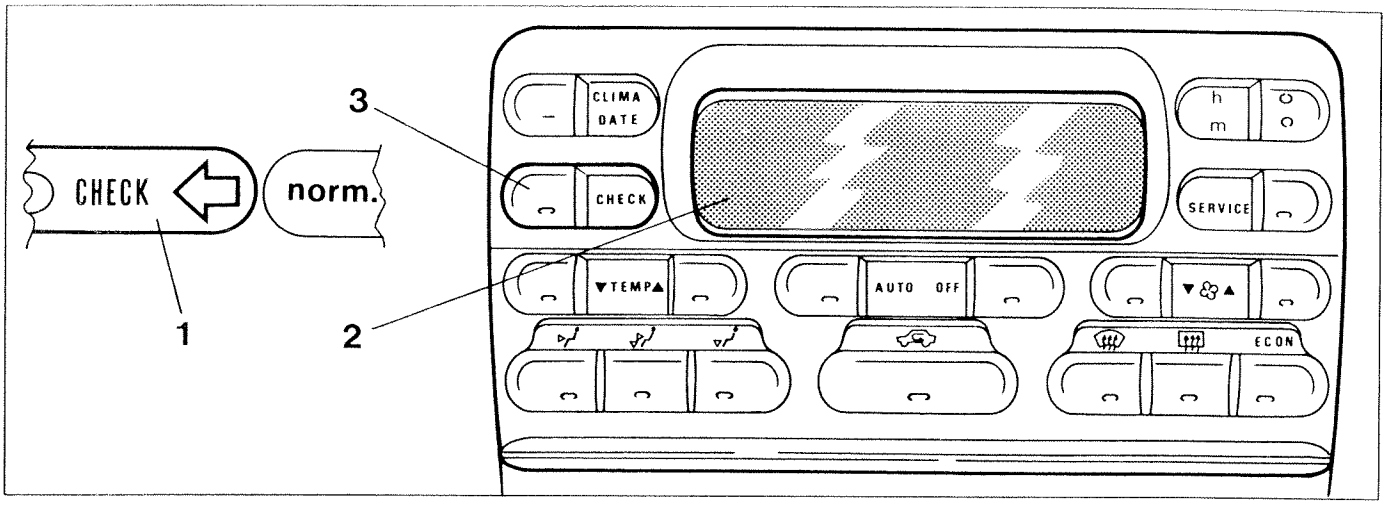

P3U29DB01

Display of error messages
The following error messages concerning the operation of the automatic transmission are displayed on the Infocenter:
- AUTOMATIC TRANSMISSION CONTROL MODULE FAULT;
- AUTOMATIC TRANSMISSION OIL OVERHEATING.

Press the CHECK button (3) to recall cyclically on the Infocenter display (2), for a period of 5 seconds, the faults memorized previously.
If there are no memorized faults, the message "CHECK OK" will be displayed for about 1 second.
At the same time as the display of the error message, the system sets the appropriate recovery mode to enable the car to reach the nearest Autorized Workshop.

Error deletion
The errors memorized by the control module can be deleted by active diagnosis with the FIAT/LANCIA Tester, or by disconnecting the battery for over 10 seconds.

Recovery mode

When a fault is detected, the system lights up the red CHECK warning light on the instrument panel to warn the driver, and at the same time it activates some hydraulic and mechanical safety devices and sets up the gearbox in safe conditions.
The system assesses the extent of the fault, and if the fault is not liable to cause dangerous situations, it permits driving so that the car can reach the nearest Service centre.
For some types of fault, some substitutive functions are also available: "recovery" parameters are used.

If the malfunction is detected during driving, the gearbox selects 4th gear which effects a mechanical engine-gearbox coupling. This causes the engine to stop as soon as the vehicle stops.
If the fault is permanent, when the engine is next started, the vehicle sets off in 2nd gear and remains in that gear until the engine stops.

If the malfunction is detected during starting of the engine, the vehicle sets of in 2nd gear and remains in that gear until the engine stops.

There are the following conditions during the emergency programme:
- maximum modulation pressure;
- possibility of selecting reverse gear, but excluding the protection against accidental engagement.

Copyright Fiat Auto

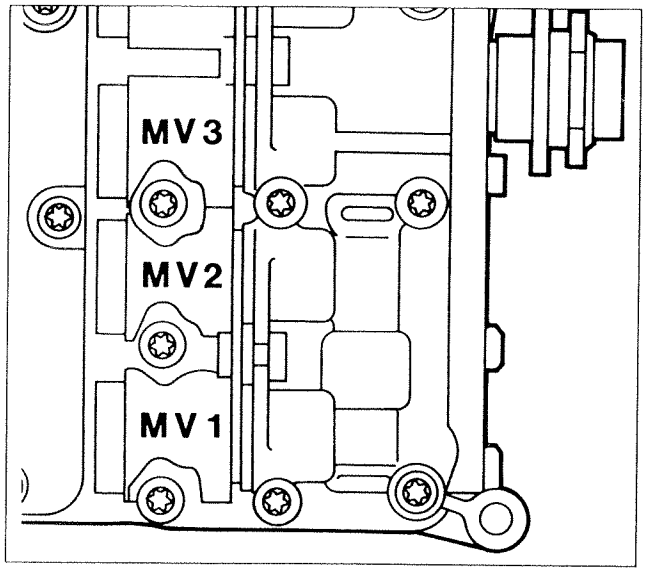

P3U30EB01

GEARCHANGE SOLENOIDS

The gearchange solenoids MV1, MV2 and MV3 are located at the top of the gearbox and they manage the performance of gear changes. The solenoids are of the normally closed (N.C.) type and, receiving a signal from the TCM, they change their position in order to arrange the engagement of the different gears, in accordance with the table below.

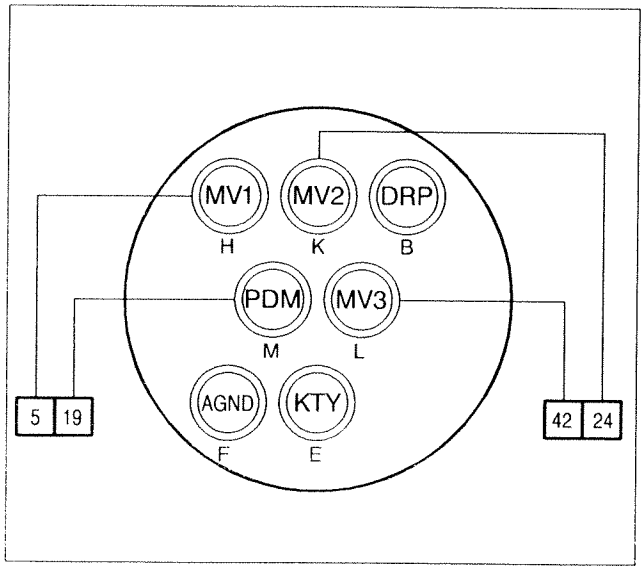

P3U30EB02

Gear	MV1	MV2	MV3
P	OFF	ON	ON
R	OFF	OFF	OFF
N	OFF	ON	ON
D-1st	OFF	ON	OFF
D-2nd	ON	ON	OFF
D-3rd	ON	OFF	OFF
D-4th	OFF	OFF	OFF

Wiring connector

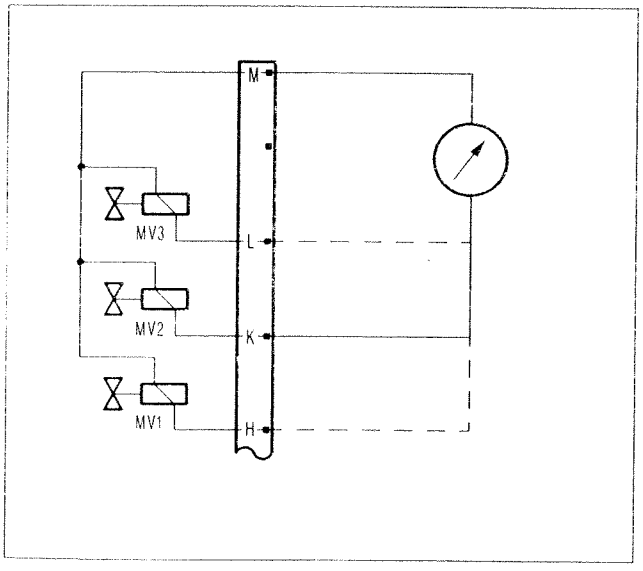

P3U30EB03

The resistance of the gearchange solenoids can be measured by disconnecting the connector and connecting an ohmmeter as shown in the figure.

Resistance: 33.5 ohm at 20°C

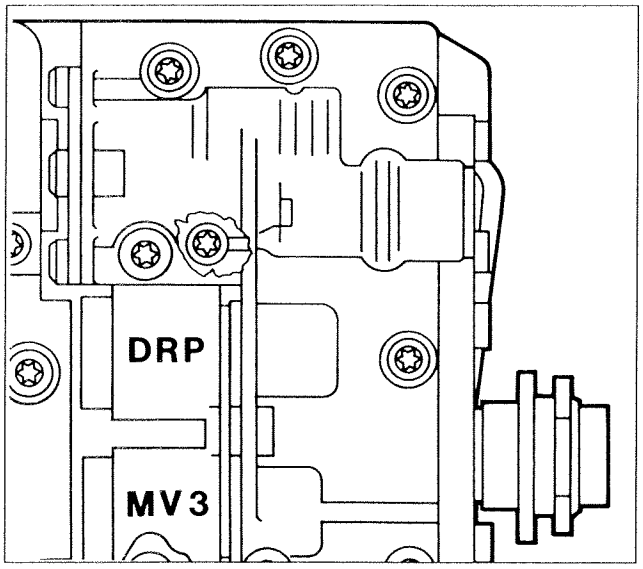

P3U31EB01

OIL PRESSURE MODULATING SOLENOID

The DRP line pressure modulating solenoid is located at the top of the gearbox and it manages the changes in hydraulic pressure.
The solenoid is controlled by a duty cycle signal sent by the TCM, and it regulates the hydraulic pressure acting on the brakes and clutches to optimize the quality of gear engagements and obtain the best compromise between smooth action and friction lining wear on the brakes and clutches.

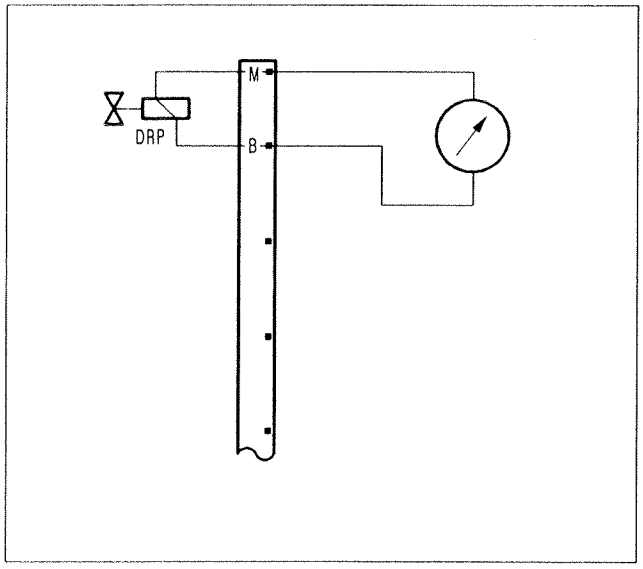

P3U31EB02

The resistance of the DRP line pressure modulating solenoid can be measured by disconnecting the connector and connecting an ohmmeter as shown in the figure.

Resistance: 6 ohm at 20°C

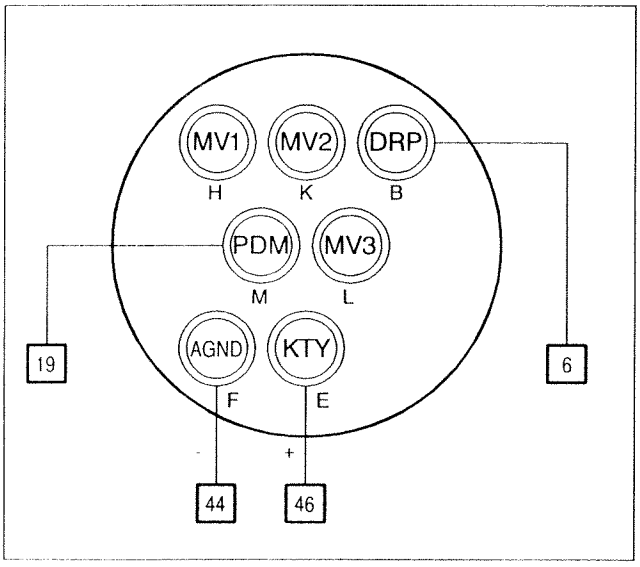

P3U31EB03

GEARBOX OIL TEMPERATURE SENSOR

The sensor is located in the gearbox casing, and it measures the temperature of the transmission oil by the change in resistance induced on the sensitive part of the sensor.
The information supplied to the control module is used to increase the line pressure under cold conditions in order to reduce gear change times.

Wiring connector

Copyright Fiat Auto

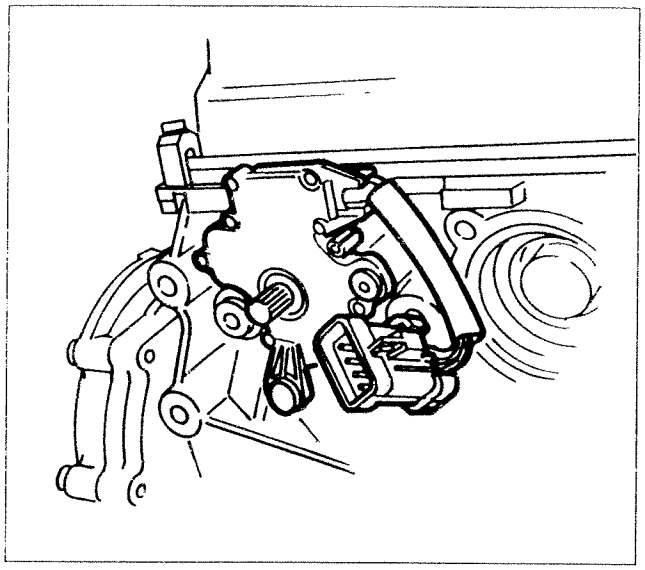

P3U32EB01

SELECTOR LEVER POSITION SENSOR

The selector lever, connected to the gearbox by a flexible component, acts on the electrical device consisting of five microswitches, through which the gearlever position selected by the driver is coded. The seven positions of the gearlever (P, R, N, D, 3, 2 and 1) are coded on three lines with the first three microswitches (X, Y and Z). The other two (R and P/N) instead activate the reversing lights and supply the enablement to the starting circuit.

The three selector lever position coding microswitches (X, Y and Z) are connected directly to the control unit (terminals 50, 14 e 33) and the instrument panel for lighting up the printing relating to the selected gearbox (P, R, N, D, 3, 2 and 1). The coding on the three cables used for the selector lever position, of the binary type, is shown in the table opposite.

Lever position	Term. 50 X	Term. 14 Y	Term. 33 Z
P	0	1	1
R	0	0	1
N	1	0	1
D	1	0	0
3	0	0	0
2	0	1	0
1	1	1	0

Output signals from the selector lever position sensor

0 = Switch closed
1 = Switch open

Wiring connector

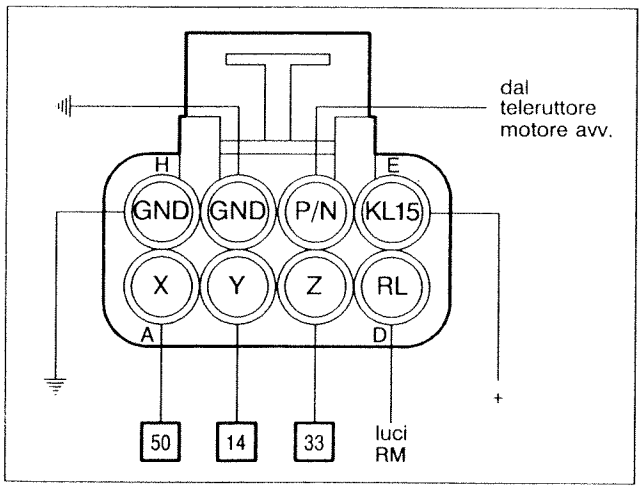

P3U32EB02

The three microswitches (X, Y and Z) lead to the terminals A, B, C respectively and the shared earth H.
The closure of the microswitch (P/N) leading to the terminals F and G is used by the starting circuit to permit energization of the starting enablement relay only under safe conditions (vehicle stopped and selector lever in position N or P).
The microswitch (R) leading to terminals D and E, is used to switch on the reversing lights.

WIRING DIAGRAM

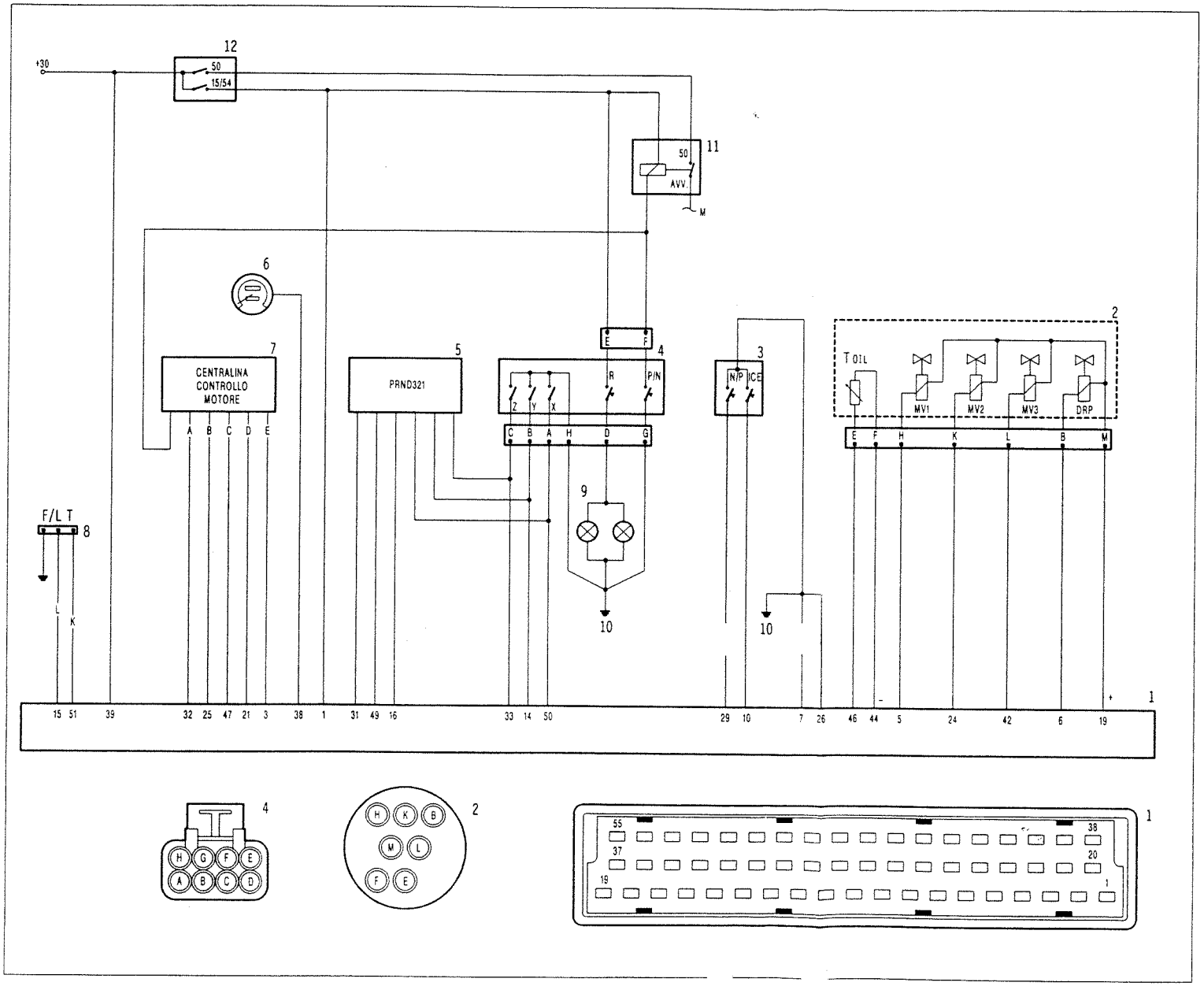

P3U33E801

TROUBLESHOOTING

Operating problems of the ZF electronically-controlled automatic transmission may be caused by the engine, the control system or the automatic gearbox itself.

The troubleshooting procedure starts with very simple operations carried out in order of difficulty, initially aimed at establishing whether the fault depends on the engine, control system or gearbox.

Electrical faults are revealed by the self-test function of the control module, by the red CHECK warning light on the instrument panel coming on and the display of the error messages on the Infocenter display.

Preliminary tests

Checking oil level

NOTE *The gearbox oil level should be checked with the engine and gearbox at normal operating temperature (gearbox oil temperature: 70 - 80°C), so the vehicle should be driven for a suitable period of time before the check.*

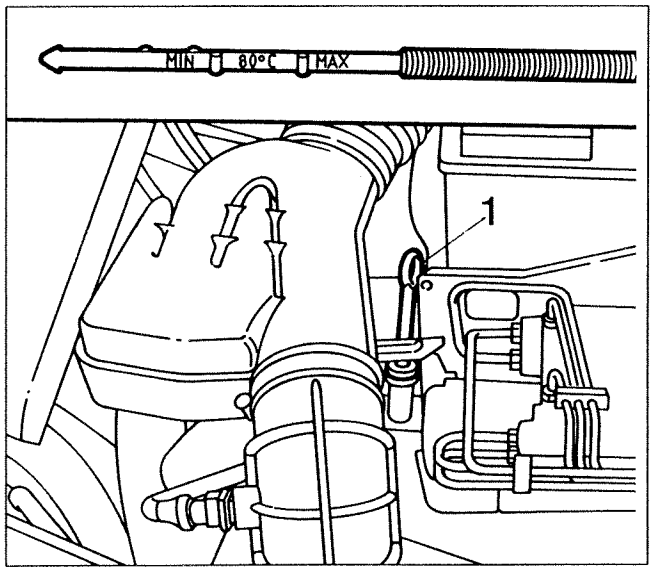

P3U34EB01

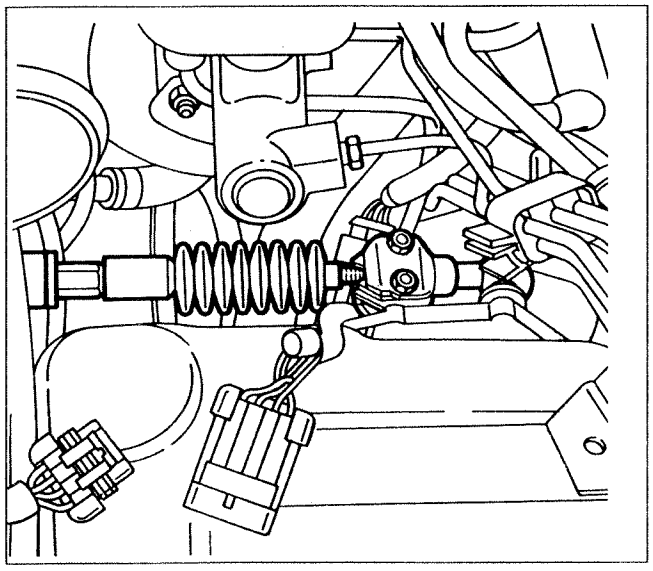
P3U34EB02

To check the gearbox oil level, proceed as follows:
- park the vehicle on flat ground and apply the parking brake;
- with the engine idling, gently shift the selector lever from position P to position 1, then return it to P;
- withdraw the oil level dipstick (1) and clean it;
- insert the dipstick fully in its seating;
- withdraw the dipstick again and check that the oil level is between the MIN and MAX marks on the side of the dipstick marked 80°C.

If the oil level is low, identify and eliminate the leaks and then top up the level.
Also check the condition of the oil: if it smells burnt or is black, replace it.

Checking selector lever position

Moving the selector lever from position N to the other positions, check that the lever can be moved smoothly without stiffness in any position, and that the position indicator on the instrument panel indicates the correct position.

Checking starter switch

If the engine does not start when the selector lever is in position N or P, or vice versa it starts which the lever is in a position other than N or P, the selectcor lever position sensor has to be adjusted by carrying out the following operations:
- withdraw the stop from the head of the gearbox cable, then remove the head from the sensor's lever;
- screw up or unscrew as appropriate the head on the gearbox cable;
- refit the head on the sensor lever and lock it with the stop.

Checking idle speed
Check that the idle speed is correct.

Tests with FIAT/LANCIA Tester

A guided fault diagnosis on the electrical part can be conducted by connecting the FIAT/LANCIA Tester with M39-A memory to the diagnostic socket of the control module.
The complete diagnosis of the system comprises three stages:
1. display of a set of operating parameters (with the engine running);
2. display of the errors and elimination of the causes (guided diagnosis);
3. activation of the actuators (active diagnosis).

1. Display of the operating parameters
The operating parameters displayed are as follows:
- selector lever position;
- selected driving mode;
- vehicle speed;
- angle of aperture of throttle valve (with engine running);
- gearbox oil temperature;
- engine rpm;
- gearbox rpm;
- driving torque reduction function;
- battery voltage.

2. Display of error and elimination of causes (guided diagnosis)
At the start of diagnosis, the F/L Tester reads the errors memorized by the control module.
When an error is detected, the F/L Tester emits an acoustic signal and displays the appropriate error message.
A list of the possible causes of the error is then displayed.

After all the necessary repairs or replacements have been carried out and all the faults eliminated, the errors will be deleted automatically by the F/L Tester.

A guided diagnosis can also be carried out checking step-by-step the efficiency of the circuits and the various sensors/switches.

Once the problems have been eliminated, a road test must be carried out with the engine and gearbox up to temperature for at least 10 minutes. Then check with the F/L Tester that there are no problems with the system.

3. Activation of actuators (active diagnosis)
The following actuators can be activated with the engine off and the selector lever in position N, by a command sent from the F/L Tester:
- solenoid MV1 on gearbox,
- solenoid MV2 on gearbox,
- solenoid MV3 on gearbox,
- actuator supply relay (in control unit).

This test is useful for checking the operation of the actuators, as the clicking caused by the internal movement of the solenoids is audible.

Errors memorized by the control module can also be deleted by active diagnosis (provided they are no longer present or their circumstances are not re-created).

NOTE *Errors can also be deleted by disconnecting the battery for over 10 seconds.*

Copyright Fiat Auto

Stall speed test

This test is for checking the performance of the transmission and engine, and is carried out by measuring the maximum rpm achieved by the engine with the selector lever at position D.

The duration of the stall speed test must not exceed 10 seconds.

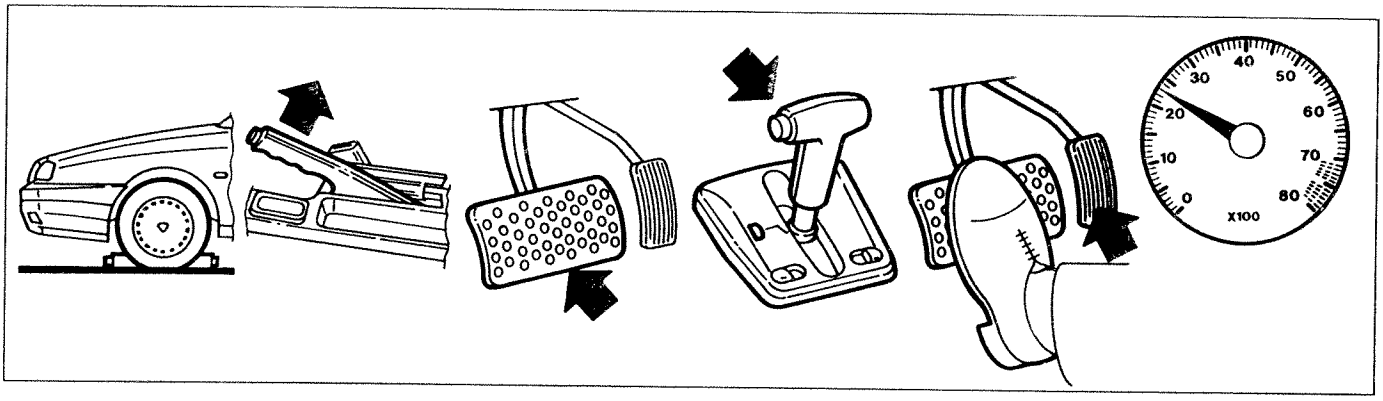

P3U44DB01

Measaure the stall speed by carrying out the following operations:
- chock the vehicle by placing wedges under the wheels;
- apply the parking brake fully;
- push strongly on the brake pedal with the left foot;
- start the engine and bring it up to operating temperature;
- move the selector lever to position D;
- fully depress the accelerator pedal with the right foot and quickly read the maximum rpm reached by the engine.

Stall speed: 2300 ± 100 rpm

Stall speed	Possible causes
Lower than specified value in both D and R	* Insufficient engine power * Incorrect operation of free wheel on stator of torque converter
Higher than specified value in D	* Converter does not receive the specified quantity of oil * Clutch slipping

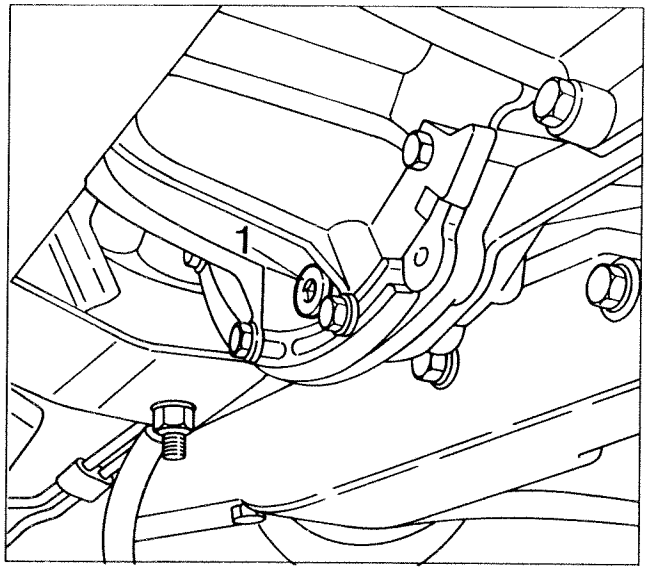

P3U37EB01

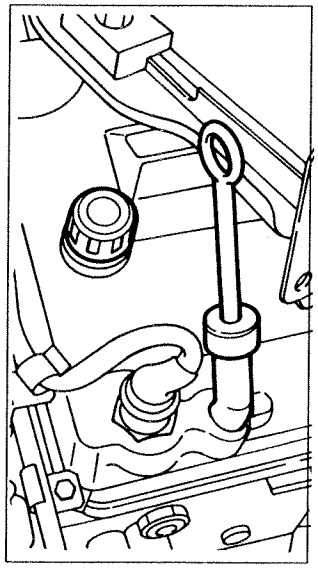
P3U37EB02

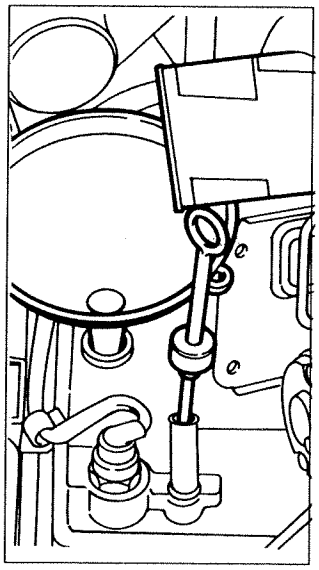
P3U37EB03

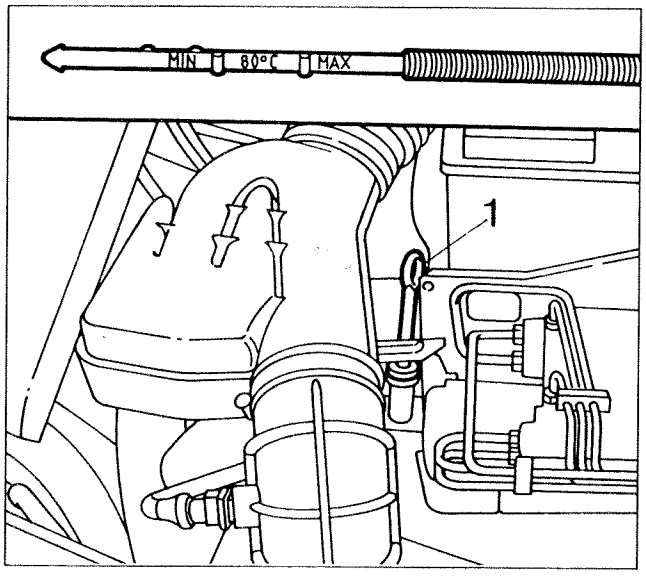

P3U34EB01

REPLACING GEARBOX OIL

The gearbox oil and filter should be replaced every 45000 km or every 3 years. The type of oil to be used is TUTELA GI/A.

Draining

Drain the gearbox oil after a journey so that the oil reaches operating temperature.
Then carry out the following operations:

- place the vehicle on ramps;
- undo the plug (1) and allow the oil to drain;
- retighten the plug (1) after replacing the seal.

Filling

Remove the inlet pipe.
Withdraw the dipstick and, using a clean funnel so as not to contaminate the oil, pour in the necessary quantity of gearbox oil.

Periodical replacement: 5 l - 4.5 kg
Recommended gearbox oil: TUTELA GI/A

CHECKING OIL LEVEL

NOTE *The gearbox oil level should be checked with the engine and gearbox at normal operating temperature (gearbox oil temperature: 70 - 80°C), so the vehicle must be driven for an appropriate period of time before the check.*

To check the gearbox oil level, proceed as follows:
- park the vehicle on flat ground and apply the parking brake;
- with the engine idling, gently shift the selector lever from position P to position 1, then return it to P;
- withdraw the oil level dipstick (1) and clean it;
- fully insert the dipstick in its seating;
- withdraw the dipstick again and check that the oil level is between the MIN and MAX marks on the side of the dipstick marked 80°C.

If the oil level is low, identify and eliminate the leaks, then add oil to top up the level.

Copyright Fiat Auto

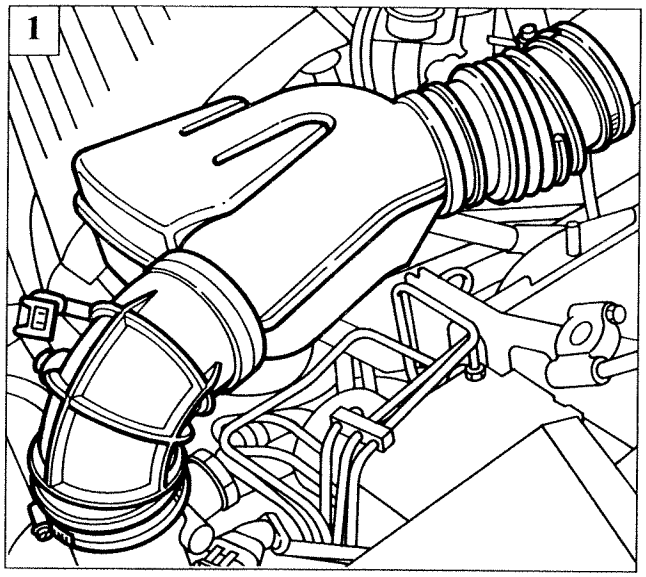

P3U38EB01

GEARCHANGE CONTROL CABLE

Removing

To remove the gearchange control cable, carry out the following operations from the engine compartment:

1. disconnect the air temperature sensor connector and undo the clip securing the inlet pipe to the flowmeter; undo the clip securing the inlet pipe to the throttle body and remove the pipe complete with resonator;

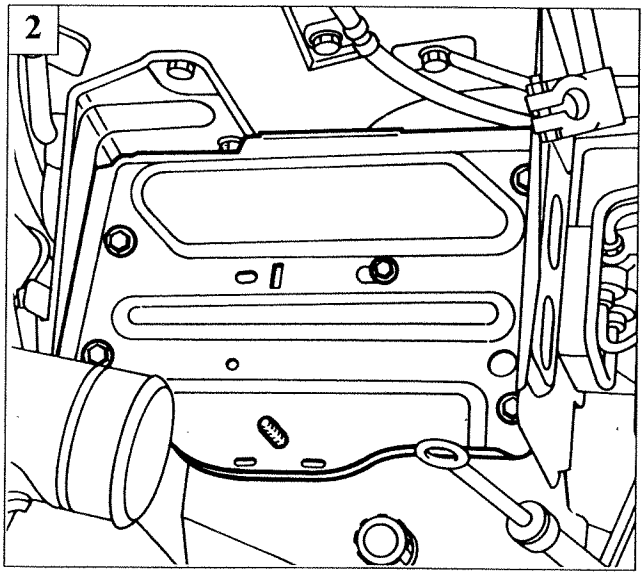

P3U38EB02

Be careful with the resonator pipes. It is advisable to undo the bolt securing the resonator mounting bracket and rotate the bracket downwards.

2. remove the battery and battery cage by undoing the attachment bolts;
3. undo the bolts and remove the battery cage mounting bracket;
4. undo the nuts securing the adjustment device and nut securing the rubber, then release the gearchange control cable by pulling it upwards and withdrawing it from the adjustment device;

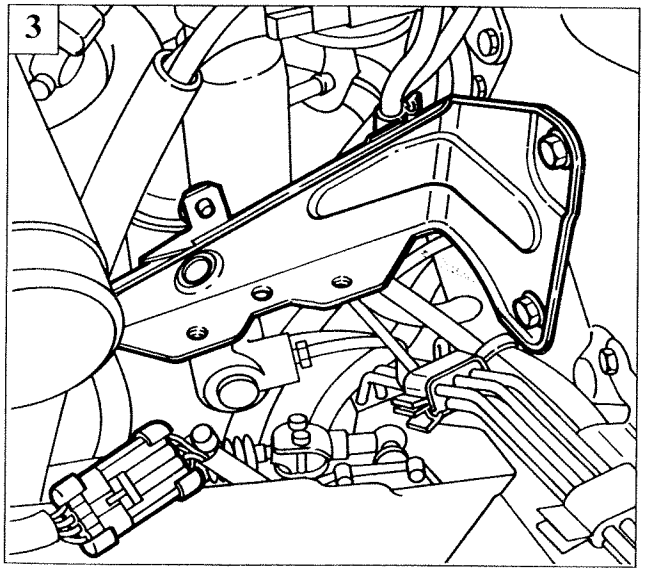

P3U38EB03

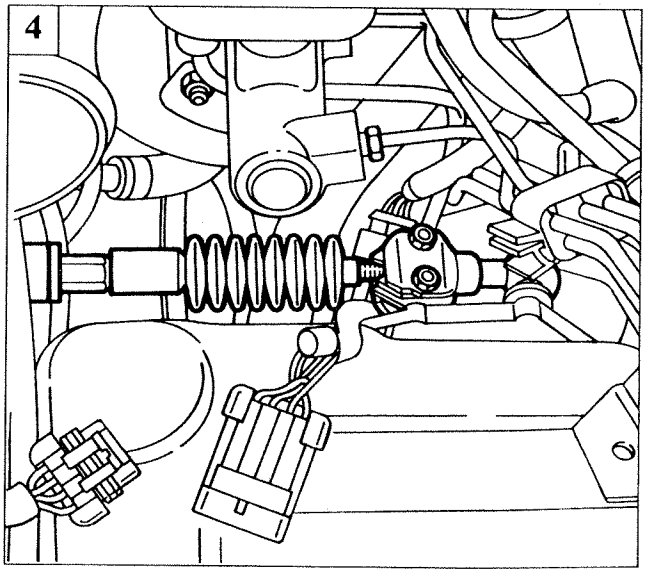

P3U34EB02

1

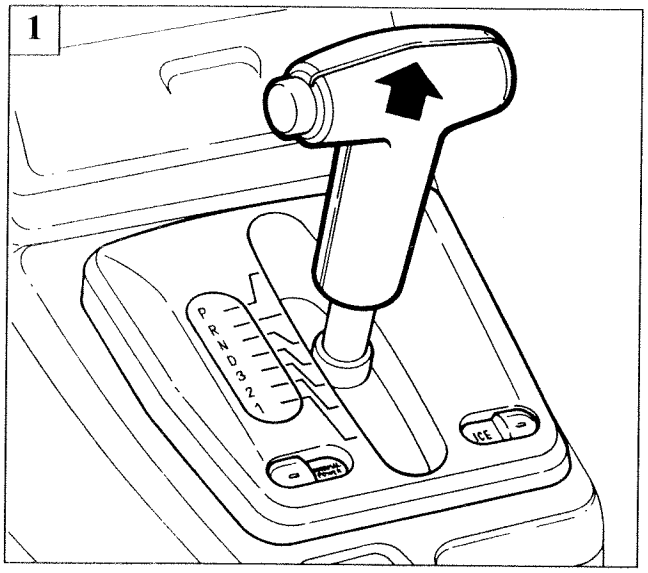

P3U51DB01

2

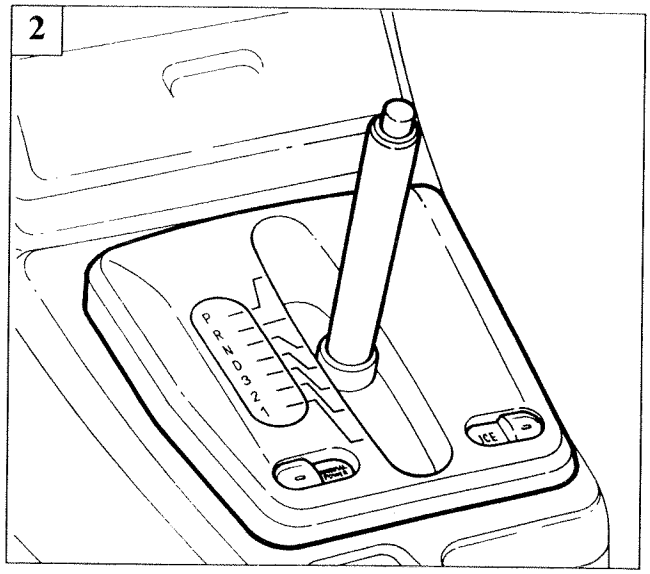

P3U51DB02

3

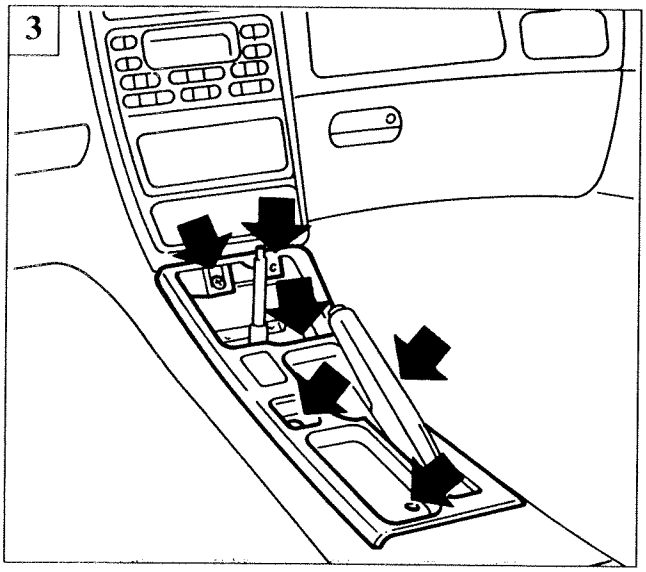

P3U51DB03

Carry out the following operations from inside the vehicle:

1. position the selector lever at P, then withdraw the selector lever handle upwards;
2. disengage the lever position indicator panel, disconnect the wiring connectors and withdraw the panel;
3. undo the screws (arrowed) and remove the front tunnel trim;
4. remove the rear ventilation outlets and rear ashtray;
5. undo the screws securing the tunnel trim and remove the trim;

4

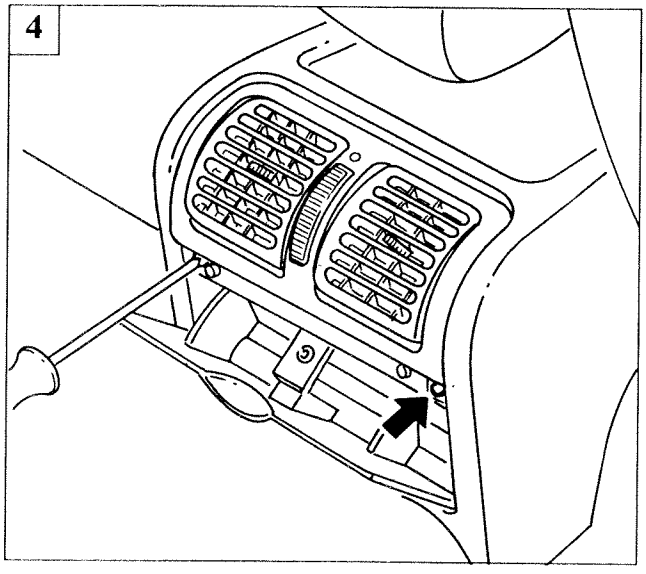

P3U51DB04

5

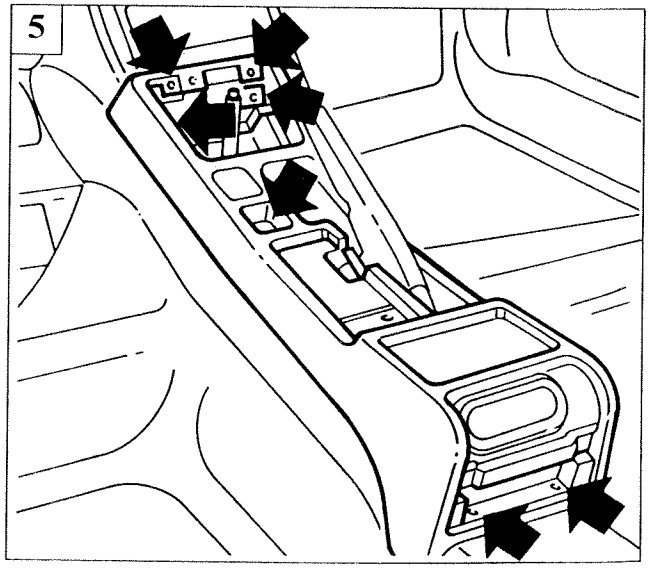

P3U51DB05

Copyright Fiat Auto

21-27.

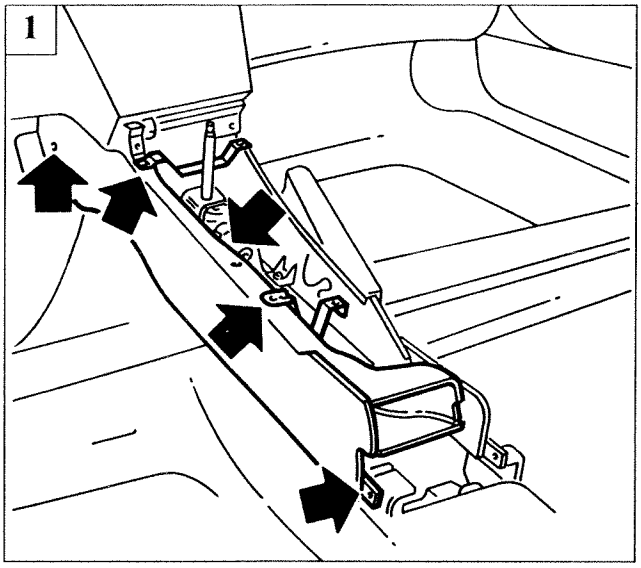

P3U52DB01

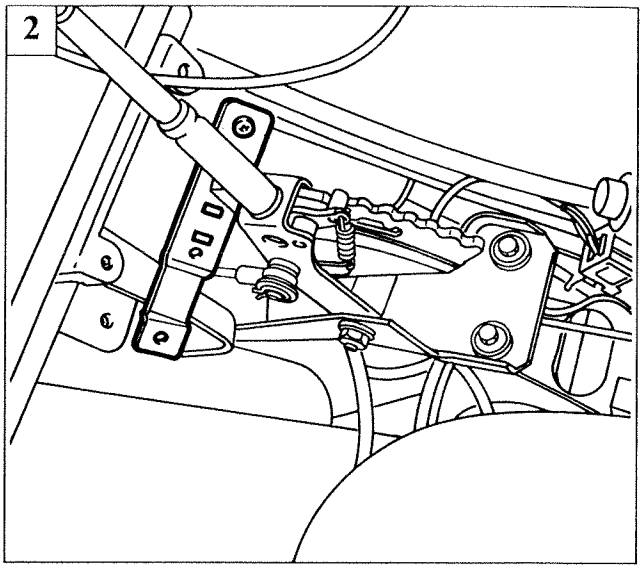

P3U52DB02

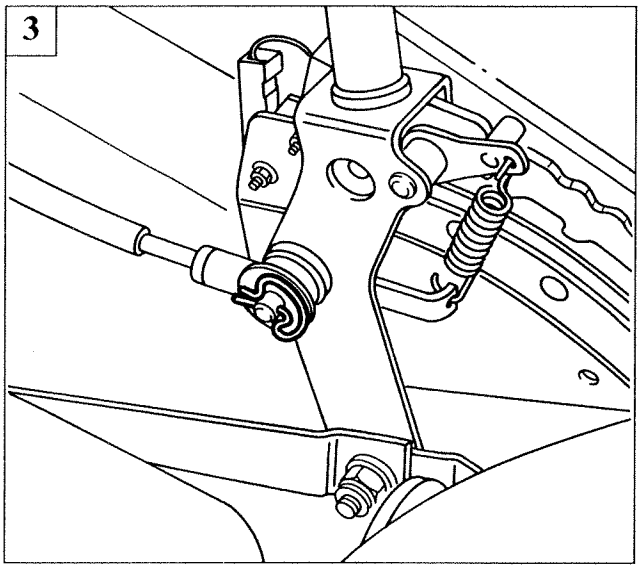

P3U52DB03

1. undo the screws (arrowed) and withdraw the left side wall;
2. remove the side wall mounting bracket;
3. remove the split pin securing the gearchange control cable to the selector lever;

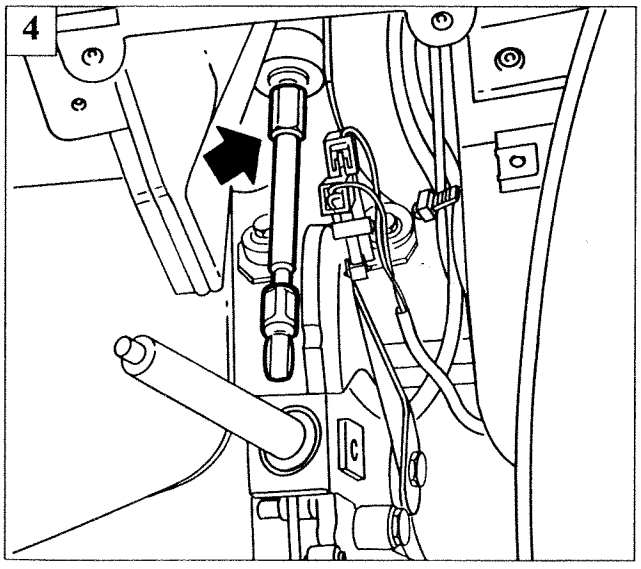

P3U52DB04

4. undo the nut securing the rubber, release the gearchange control cable from the bracket and withdraw it.

Take particular care when withdrawn the cable from the rubber protection located on the fire wall.

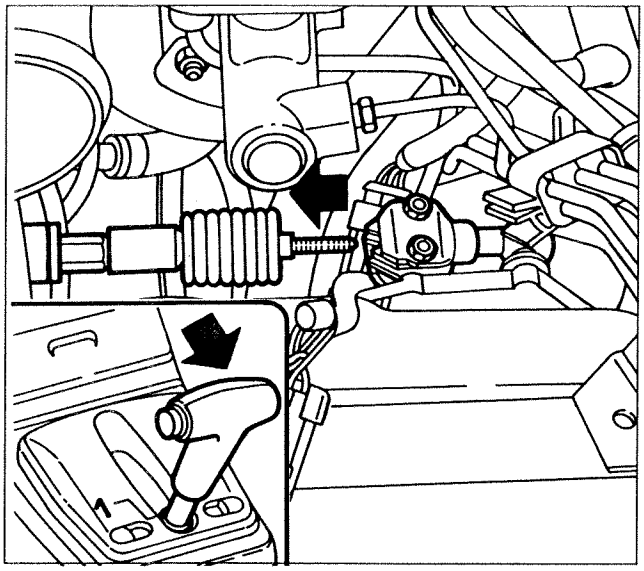

P3U41EB01

Refitting

To refit the gearchange control cable, reverse the procedure for removal from inside the vehicle.

Secure the gearchange control cable from the engine compartment side, as follows:

- move the selector lever to position 1;
- fit the rubber in its bracket and tighten the nut;

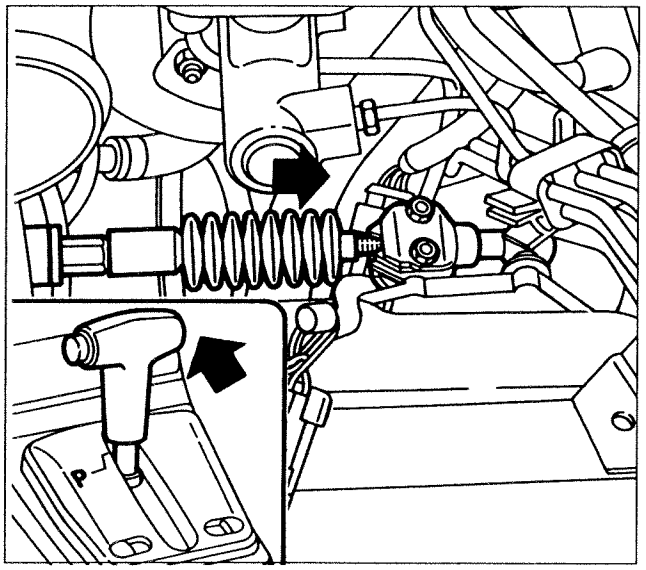

P3U41EB02

- line up the end of the gearchange control cable with the adjustment device, and at the same time from the interior compartment move the selector lever from position 1 to position P, fitting the end of the cable in the adjustment device;
- tighten the nuts on the adjustment device;
- manoeuvre the selector lever and check that it perceptibly clicks into its various positions.

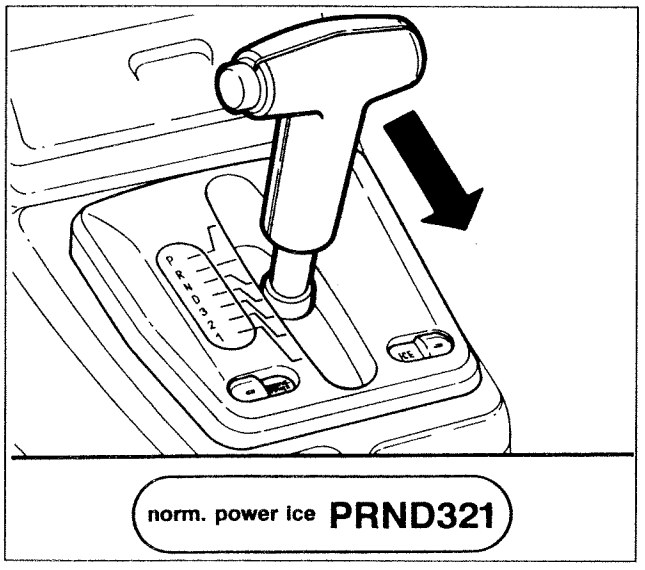

P3U53DB03

Complete assembly by securing the battery cage and battery, the inlet pipe and by connecting all the sensors.

Finally proceed with the following checks:
- the engine should only start with the selector lever in position P or N;
- each position of the selector lever must correspond to the relevant indications on the indicator panel and instrument panel display.

Copyright Fiat Auto

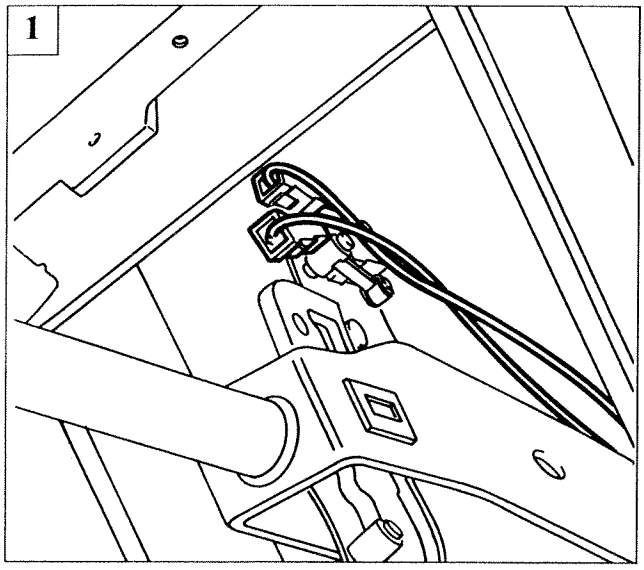

P3U54DB01

SELECTOR LEVER

Dismantling

After carrying out the operations described for removing the gearchange control cable from inside the vehicle, dismantle the selector lever as follows:

1. disconnect the connectors of the acoustic indicator microswitch;

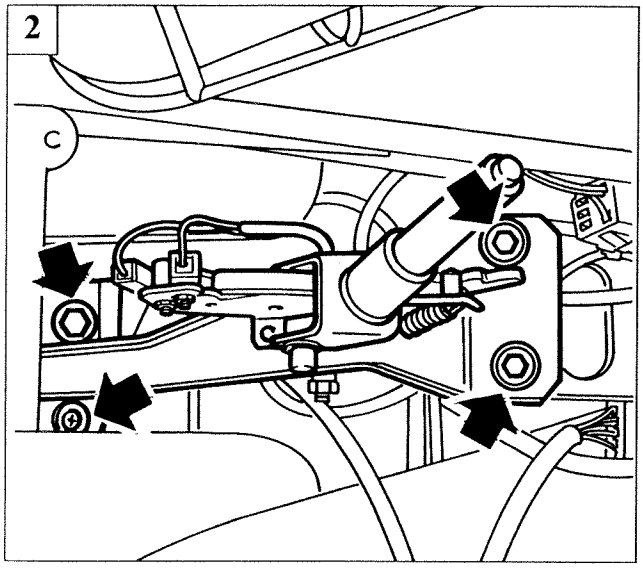

P3U54DB02

2. undo the bolts securing the selector lever mounting and remove the mounting;
3. undo the bolts securing the acoustic indicator microswitch;
4. undo the bolt securing the selector lever safety device and release the spring on the positioning device;

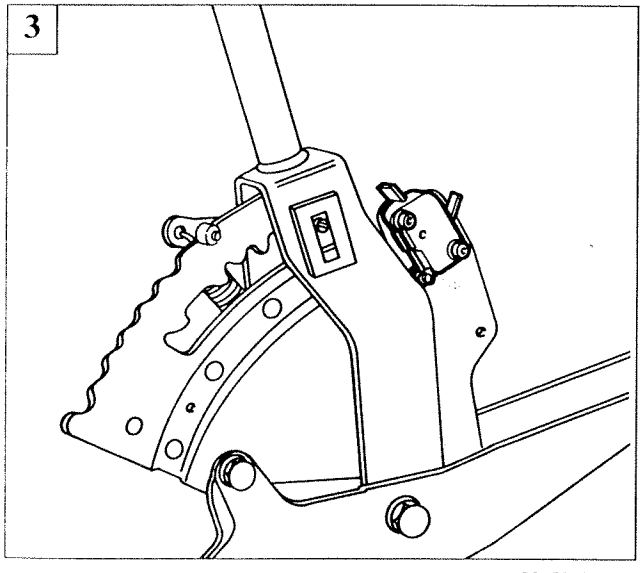

P3U54DB03

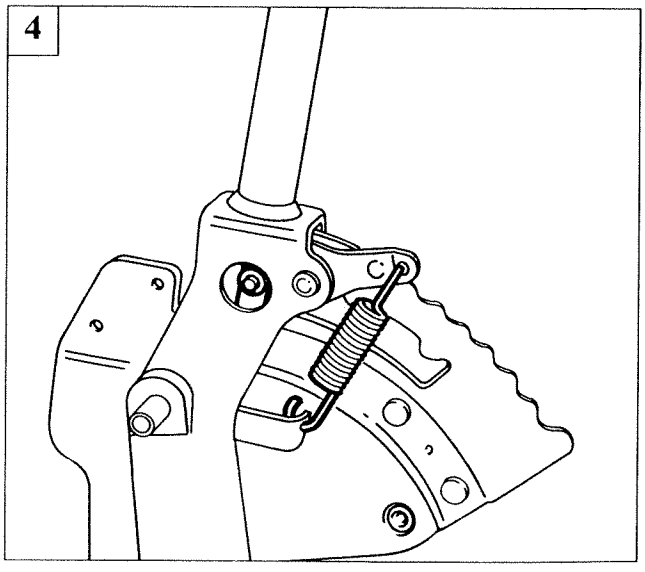

P3U54DB04

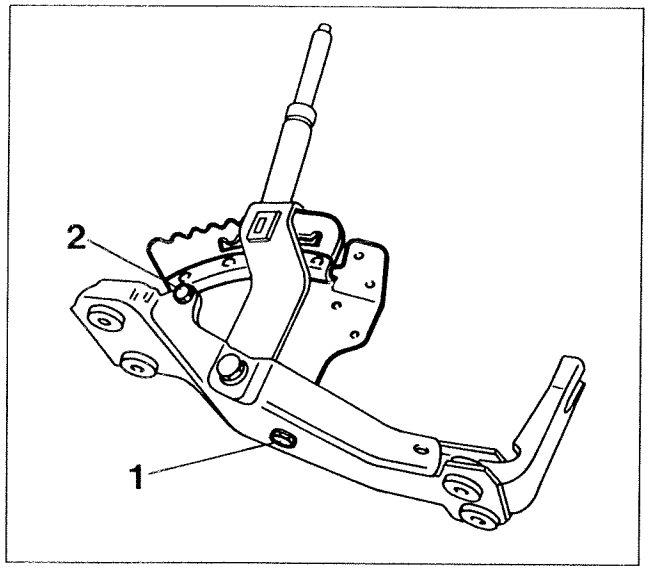

P3U55DB01

- undo the bottom bolt (1) and side bolt (2) and remove the selector;

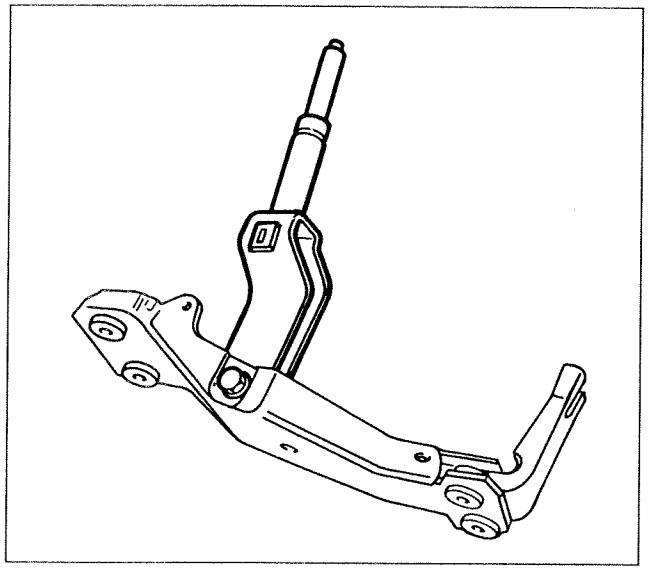
P3U55DB02

- undo the bolt and detach the gearlever.

Reassembly

To refit the selector lever, reverse the order of dismantling.

Copyright Fiat Auto

Key

1. Transmission control module (TMC)
2. Automatic transmission with solenoid assembly and gearbox oil temperature sensor
3. NORMAL, POWER and ICE driving mode switches
4. Selector lever position sensor
5. Display on instrument panel and Infocenter (for displaying selector lever position, selected driving mode and fault indication)
6. Speedometer
7. Motronic M3.7 fuel injection/ignition control unit
   A. Driving torque reduction signal
   B. Driving torque reduction signal
   C. Throttle valve position signal
   D. Engine load signal
   E. Engien rpm
8. Diagnostic socket for Fiat/Lancia tester
9. Reversing lights
10. Earth on vehicle
11. Starter motor relay
12. Ignition switch

page

DESCRIPTION AND OPERATION

- Description 1
- Selector lever 3
- Torque converter 4
- Lock-up clutch 5
- Oil pump 6
- Control components 8
- Hydraulic control system 10
- Transmission of motion 11
- Electronic control system 18
- Control module 19
- Principles of operation 22
- Gear change solenoids 31
- Lock-up clutch control solenoid 32
- Pressure control solenoid 33
- Selector lever position sensor 34
- Throttle position sensor 35
- Gearbox oil temperature sensor 36
- Coolant temperature sensor 37
- Main shaft rpm sensor 38
- Vehicle speed sensor 38
- Kick-down switch 39
- Wiring diagram 40
- Fault diagnosis 42

SERVICING AND ADJUSTMENT

- Changing gearbox oil 49
- Checking oil level 49
- Gearchange control cable 50
- Selector lever 54
- Accelerator cable with kick-down switch 56
- Gearchange lever position sensor 58
- Gearbox oil temperature sensor 60
- Main shaft rpm sensor 61
- Car speed sensor 61
- Valve assembly 62
- Control solenoids 65



The gearbox-differential unit cannot be removed and refitted by itself.
In the case of replacement, the complete power unit must be removed and the gearbox-differential unit must be separated from the engine, as described in Sec. 10 of this manual.

Copyright Fiat Auto

COPYRIGHT FIAT AUTO

The reproduction, even partial, of the text and illustrations is prohibited.

The information contained in this publication is purely indicative and could be out of date following modifications made by the Manufacturer, at any time, for technical or commercial reasons or in order to conform to legal requirements in the various countries.

Fiat Auto S.p.A.
Direzione Marketing e Commerciale
Servizi al Cliente - Servizi Post Vendita
10134 TORINO (Italy) - Corso E. Giambone, 33
Publication no. 506.475/03 - February 1995 - 400
Printed in Italy - Tip. Stampart - TORINO
order no. 60489260

DESCRIPTION

Introduction

The LANCIA k 2.0 20v uses an AISIN 50-40 LE automatic transmission and differential unit, 4-ratio AW 596/Y016 version, which has been specially designed for vehicles with front-wheel drive and transverse-mounted engine, fitted with an electronic control system connected to the engine management control unit.

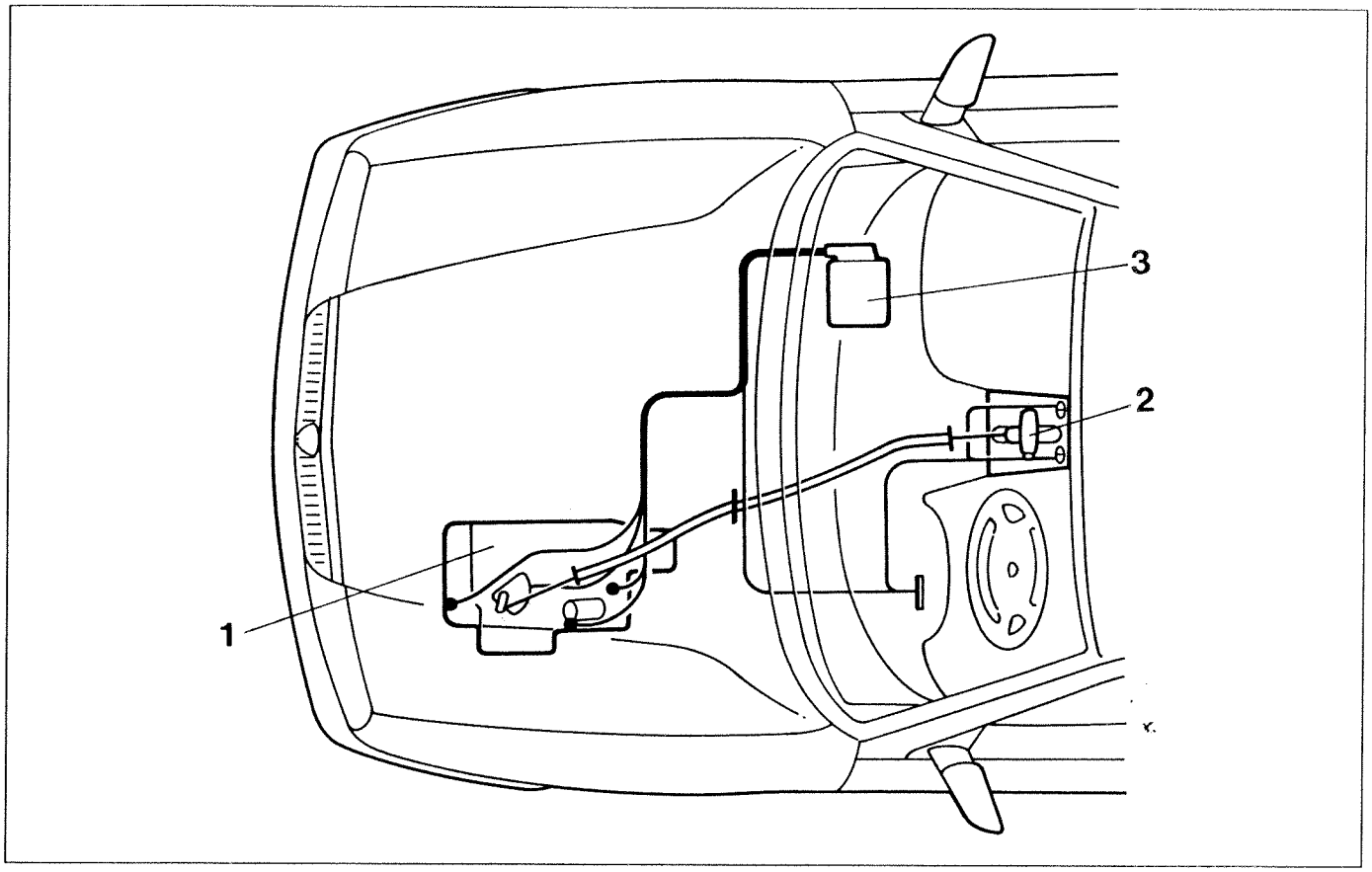

P3U01DB01

1. Gearbox-differential unit
2. Selector lever
3. Control module

The electronic control logic of the automatic transmission resides in an "intelligent" control unit (or control module) located under the dashboard, passenger side.
The control module is connected to the various sensors/actuators located on the gearbox, engine and dashboard, to the fuel injection/ignition control unit for exchanging information relating to the engine, and to the instrument panel for display of the operating conditions.

The mechanical assembly of the automatic transmission consists of:

- an oleodynamic torque converter, fitted with a lock-up clutch which locks the converter in the higher ratios;
- three epicyclic gears, two located on the main shaft and one on the layshaft;
- a band brake, three multidisc brakes and three multiplate clutches, all hydraulically operated, and three free wheels which lock the various gearing components to obtain the four forward gears and reverse gear;
- a parking lock, consisting of a gear with ratchet gear which locks the gearbox with the gearlever in the P (Park) position.

Copyright Fiat Auto

The control module interacts in the hydraulic operation of the gearbox assembly, issuing the appropriate commands to operate the clutches and brakes via four solenoids contained in a valve assembly, located at the front of the automatic transmission.

Cross section of automatic transmission and differential

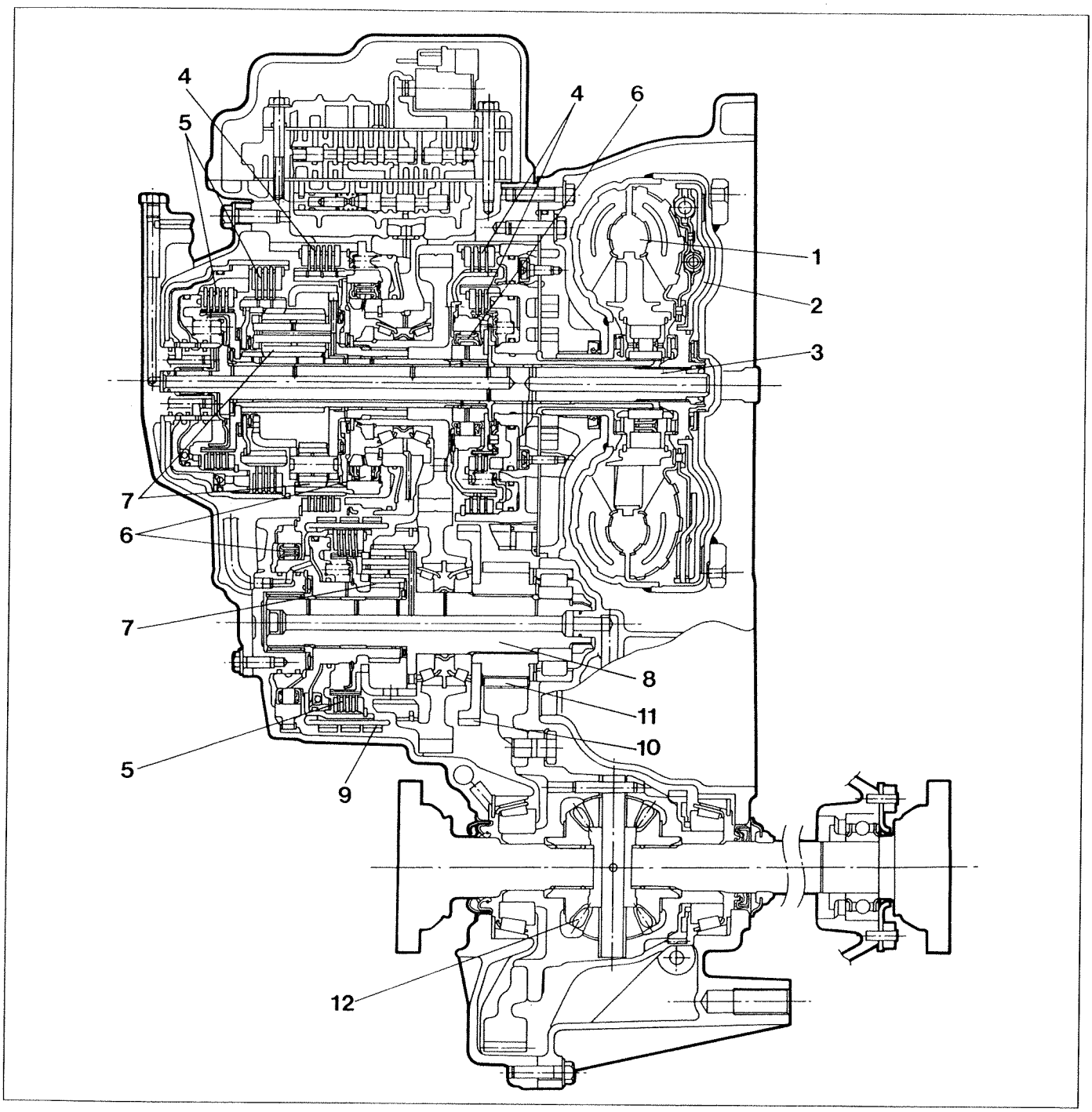

P3U02DB01

1. Torque converter
2. Lock-up clutch
3. Main shaft
4. Multidisc brakes
5. Multiplate clutches
6. Free wheels
7. Epicyclic gears
8. Layshaft
9. Band brakes
10. Parking lock gear
11. Final reduction gear set
12. Differential

SELECTOR LEVER

Gear selection is achieved using a selector lever located on the central console, which has a safety button (2) to protect against accidental gear engagements. It is connected to the automatic transmission by means of a cable, and acts on the valve assembly and on an electrical device through which a coded electrical signal indicating the position of the lever (P, R, N, D, 3, 2, 1) is transmitted to the control module.

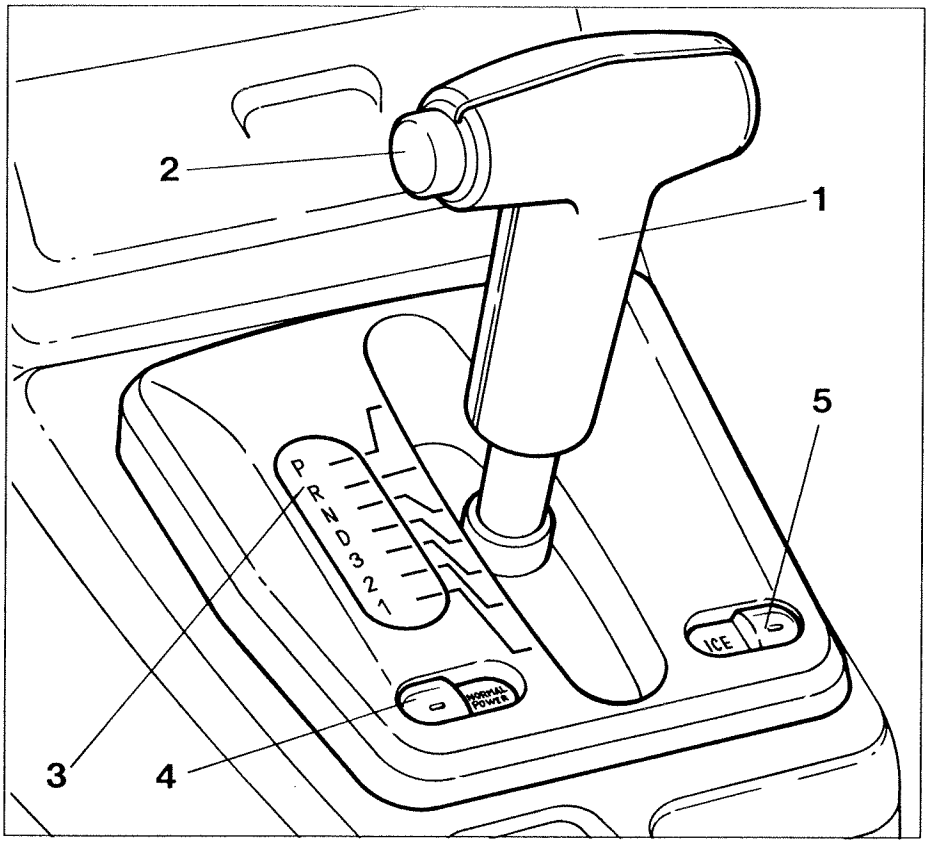

P3U03DB01

1. Selector lever
2. Safety button (to prevent accidental engagements)
3. Lever position display
4. NORMAL/POWER (this button is for switching from NORMAL mode to POWER mode and vice versa)
5. ICE button (for driving on roads with little grip)

The following positions can be set using the selector lever:

P	*Park*	The drive wheels are locked (the engine can be started)
R	*Reverse*	Revers ratio (the reversing lights come on)
N	*Neutral*	Neutral position (the engine can be started)
D	*Drive*	Automatic operation of the gearbox on all four ratios
3	*3rd gear*	Automatic operation of the gearbox on the first 3 ratios (change to 4th gear is inhibited)
2	*2nd gear*	Automatic operation of the gearbox on the first 2 ratios (change to 3rd and 4th gear is inhitibed)
1	*1st gear*	Operation in 1st gear only (with engine braking)

NOTE *A safety feature presvents the lower ratios from being engaged (even if the selector lever is moved manually) under conditions that would cause overrevving of the engine.*

Copyright Fiat Auto

21-27.

TORQUE CONVERTER

The function of the torque converter is to transmit hydraulically power from the engine to the gearbox and to increase the torque when the vehicle is accelerating. The rotary motion is transmitted to the epicyclic gearing via two shafts:
- the crankshaft connected to the converter's pump via the flywheel;
- the gearbox main shaft which engages in the hub of the converter's turbine.

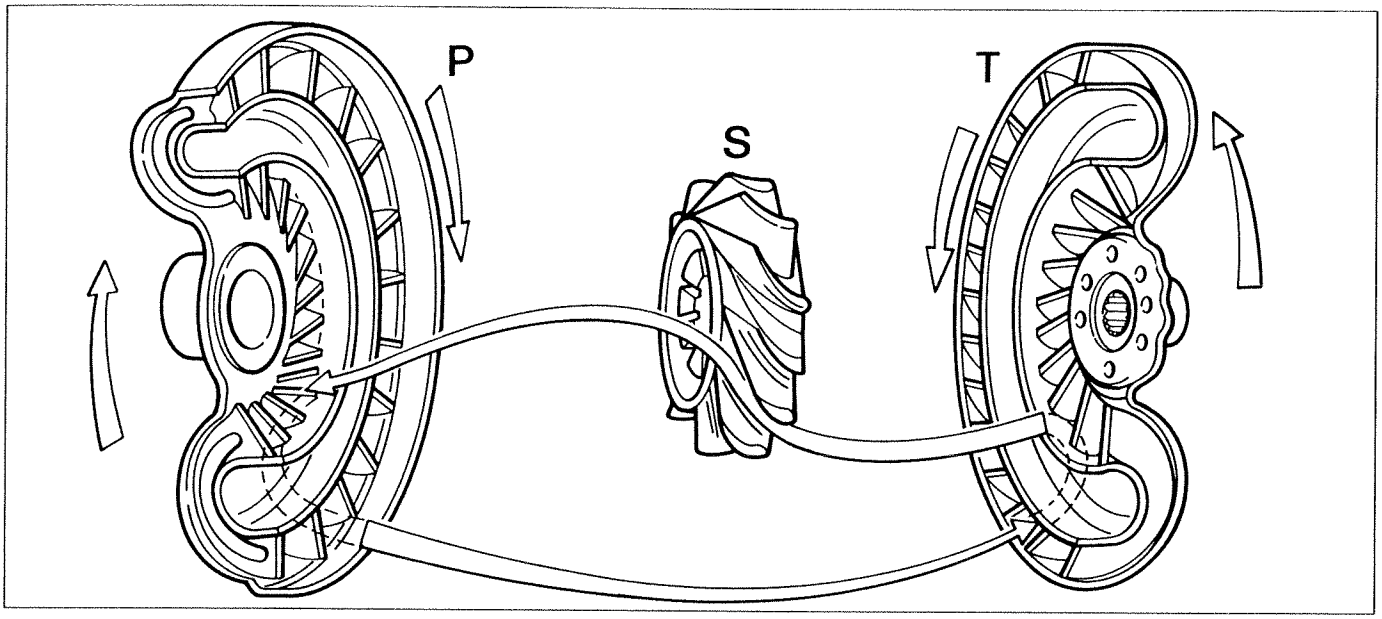

P3U04DB01

P. Pump S. Stator T. Turbine

The converter consists of a pump P connected to the crankshaft, a turbine T connected to the gearbox main shaft, and a stator S connected to the gearbox outer casing. The converter is completely filled with oil which, thanks to the kinetic energy it receives from the pump, permits the transmission of the torque.

NOTE *The torque converter does not wear in any way as there is no mechanical connection between the driven part and the driving part.*

The impeller P is connected to the crankshaft and, turning clockwise, acts as a pump, transmitting its energy to the oil.
Centrifugal force pushes the oil towards the periphery of the impeller, where it flows at high speed towards the turbine T. Here the kinetic energy of the oil imparts a rotary movement in a clockwise direction to the turbine.
The oil then passes through the stator S where it is deviated in accordance with an angle which permits its return to the pump with high efficiency. The stator is connected to the gearbox by means of a free-wheel coupling which prevents its rotation in an anti-clockwise direction and provides a reaction torque, proportional to the deviation of the oil flow, which is added to that of the turbine.
The ratio between the torque acting on the turbine and that supplied by the pump is known as the torque multiplication ratio, and is proportional to the difference in speeds of rotation of the pump and turbine.
When the wheels are stopped, the torque is about double that delivered by the engine.
As the turbine speed increases, the torque multiplication decreases continuously and tends to reach the ratio 1:1, corresponding to a turbine speed of 85-90% of the pump speed. When the turbine and pump speeds are nearly the same, the stator is enveloped by an oil flow angled in such a way as to make it reverse its direction of rotation; not locked by the free wheel, it turns in a clockwise direction without impediment and the torque converter acts as a simple hydraulic coupling.

LOCK-UP CLUTCH

In first, second and reverse gears, the torque is transmitted by the torque converter.
In third and fourth gears, the torque is transmitted first hydraulically by the converter, and then mechanically by the lock-up clutch. The latter, by connecting the converter's turbine and pump to each other as the speed increases, eliminates the internal slip of the converter and achieves a mechanical coupling between the engine and gearbox main shaft.
The locking of the torque converter allows the efficiency of transmission at high speeds to be increased, leading to a reduction in fuel consumption during long motorway journeys.

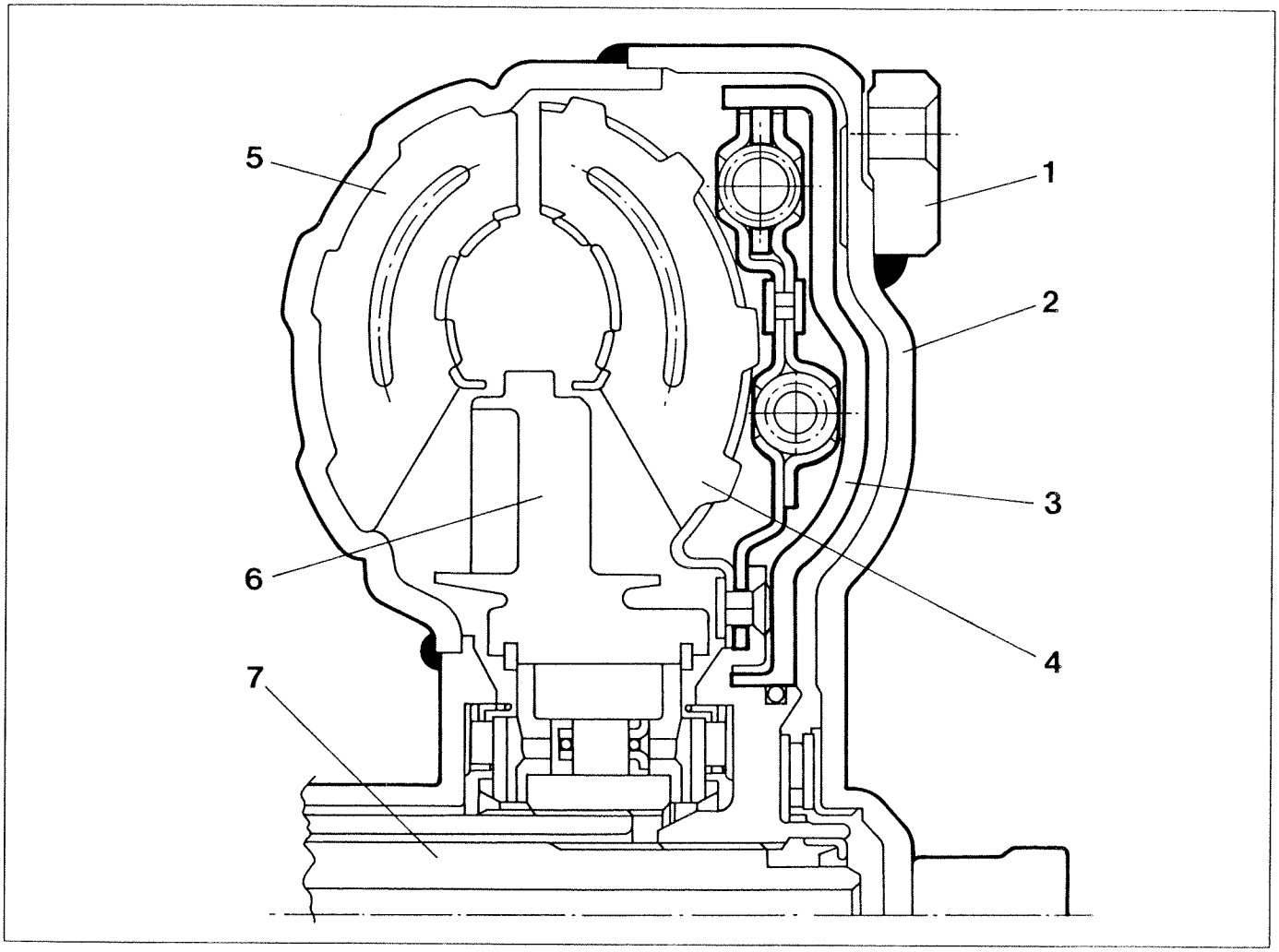

P3U05DB01

1. Flywheel attachments
2. Guard connected to pump
3. Lock-up clutch
4. Turbine
5. Pump
6. Stator
7. Main shaft

The lock-up clutch is engaged by the control module via the lock-up solenoid SL, at higher ratios (3rd and 4th gears), when multiplication of the torque supplied by the torque converter is no longer necessary.

The solenoid SL intercepts the passage of oil towards the rear side of the clutch, thus reducing the pressure, while the pressure in the converter continues to act on the front side. The clutch fitted on the turbine hub is then pushed against the guard which is connected to the converter's pump, thus locking the converter.

Copyright Fiat Auto

OIL PUMP

The oil pump used for the AISIN automatic transmission is of the internal gear type.
It is located between the torque converter and gearbox casing, and is driven directly by the converter's pump impeller.

The oil pump carries out the following functions:
- it provides the necessary pressure to the hydraulic control system and the gearbox control components (clutch and brakes);
- it sends an oil flow into the torque converter's casing to cool it and to operate the lock-up clutch;
- it lubricates the moving parts of the gearbox;
- it circulates oil in the cooling system.

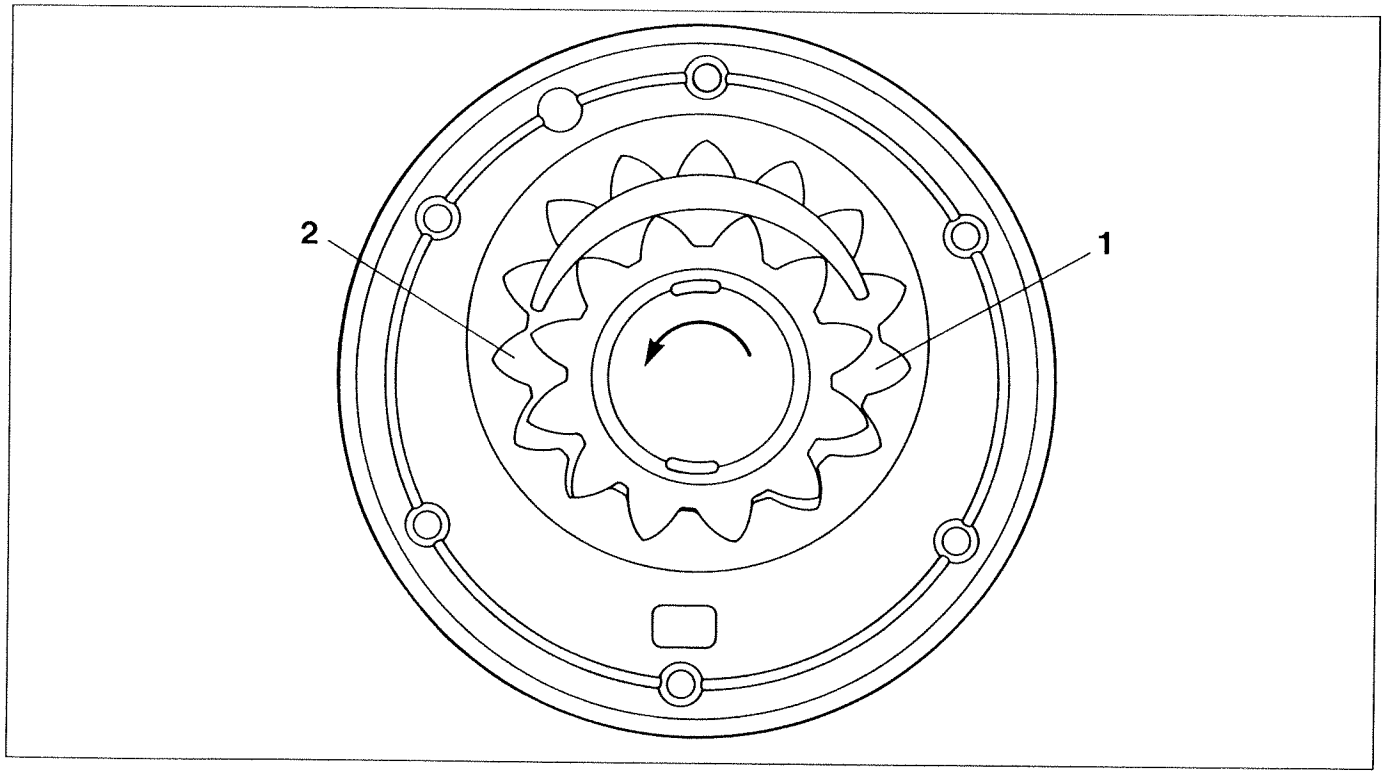

P3U06DB01

Structure of the oil pump

1. Inlet side
2. Delivery side

EPICYCLIC GEARS

The AISIN automatic transmission uses three epicyclic gears to obtain the five transmission ratios (4 forward gears + reverse).

The rear gear set P1 is a simple epicyclic gear consisting of a pinion or sun gear S1 (1), three long satellites ST1 (3) connected to the gear train carrier (5) and a crownwheel K1 (2).
The front gear set P2 instead comprises a double epicyclic gear consistins of a pinion or sun gear S1 (1), three long inner satellites ST1 (3) and six short outer satellites ST2 (4) connected to the gear train carrier (5) and a crownwheel K2 (6). The long satellites ST1 (3) and sun gear S1 (1) are shared by the gear sets P1 and P2, which are located on the main shaft.

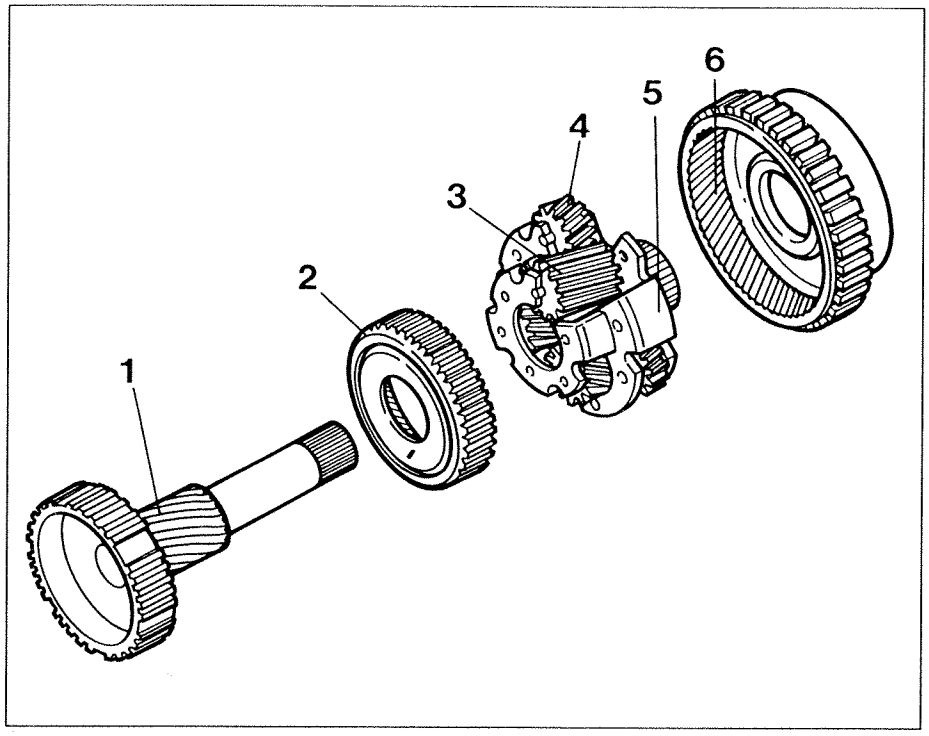

P3U07DB01

Epicyclic gear sets P1 and P2

1. Shared sun gear S1
2. Crownwheel K1 for gear set P1
3. Shared long satellites ST1
4. Short satellites ST2 for gear set P2
5. Gear train carrier T1
6. Crownwheel K2 for gear set P2

The gear set P3 is a simple epicyclic gear consisting of a pinion or sun gear S3 (1), three satellites ST3 (2) connected to the gear train carrier (3) and a crownwheel K3 (4), and it is located on the layshaft.

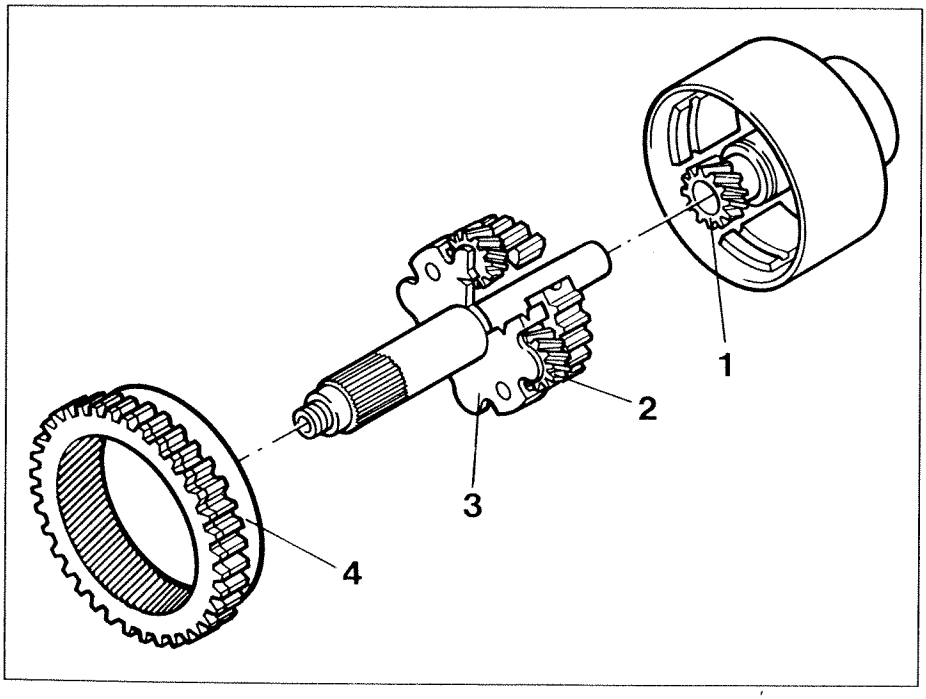

P3U07DB02

Epicyclic gear set P3

1. Sun gear S3
2. Satellites ST3
3. Gear train carrier T3
4. Crownwheel K3

Copyright Fiat Auto

CONTROL COMPONENTS

The control components of the automatic transmission are the multiplate clutches, multidisc or band brakes and free wheels, which prevent rotation between the two components of the epicyclic gears, or between one of these components and the outer casing, to obtain the four forward gears and reverse gear.

Clutches

The clutches used in the AISIN automatic transmission are all of the multiplate type. They are operated by the valve assembly included in the gearbox hydraulic control system.

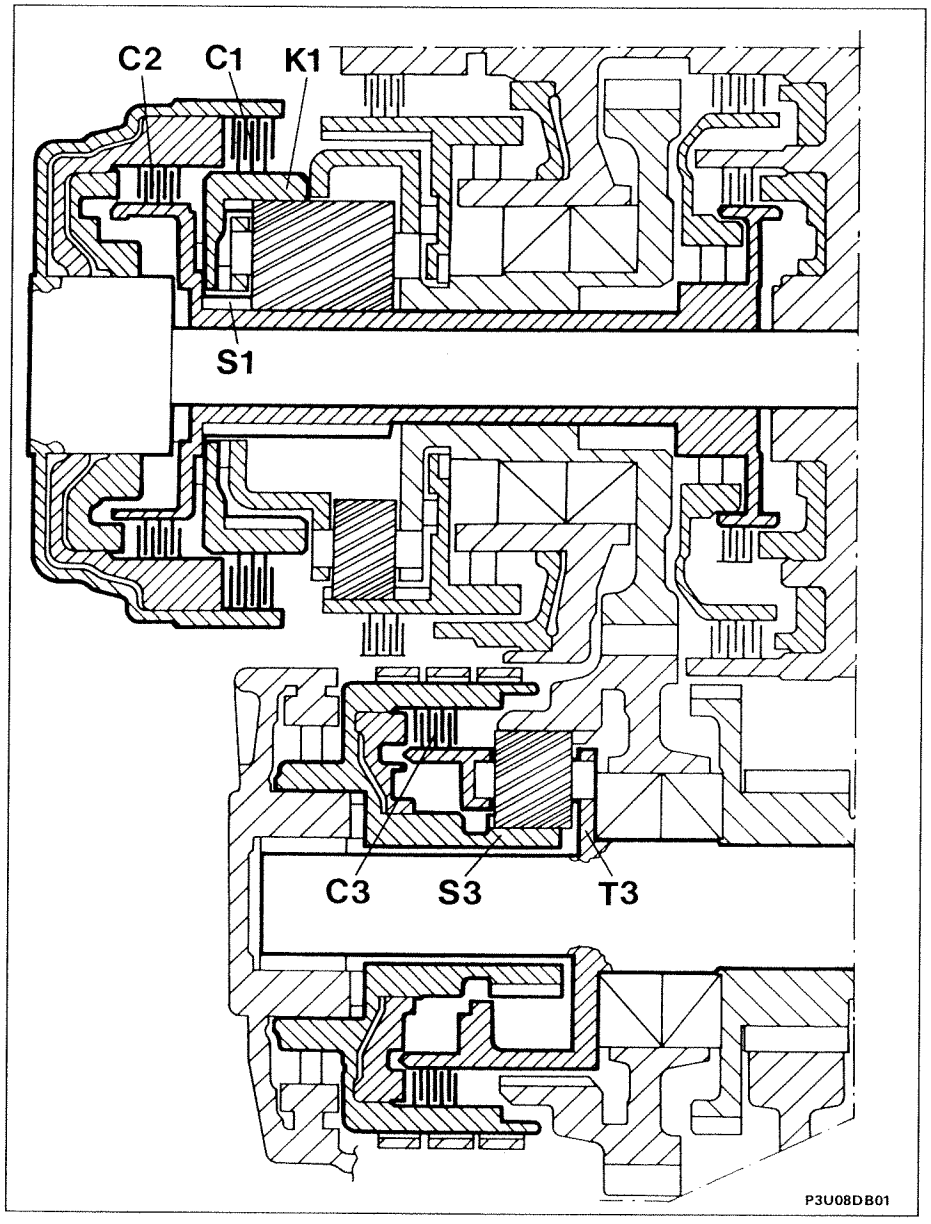

The clutch C1 prevents rotation between the main shaft and the crownwheel K2 of the gear set P1.
The clutch C2 prevents rotation between the main shaft and the sun gear S1, which is shared between the gear sets P1 and P2.
The clutch C3 prevents rotation between the sun gear S3 and the gear train carrier T3 of the gear set P3 on the layshaft.

Braking system

There are four brakes in the AISIN automatic transmission, three of the multidisc type and one of the band type. They are operated by the valve assembly included in the gearbox hydraulic control system.

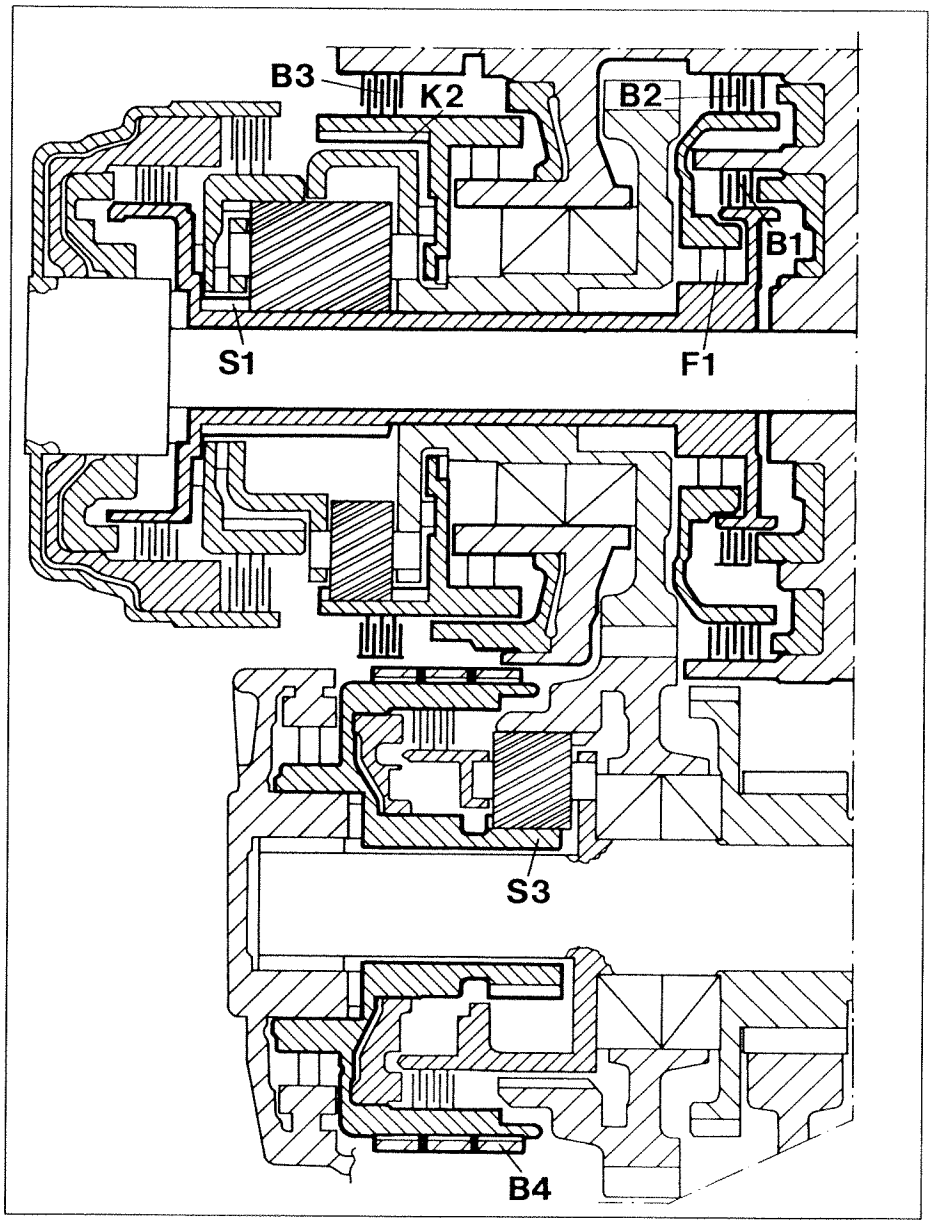

The brake B1 stops the rotation of the sun gear S1, shared by the gear sets P1 and P2.
The brake B2 stops the rotation of the outer ring of the free wheel F1, preventing the sun gear S1 shared by the gear sets P1 and P2 from rotating in an anti-clockwise direction.
The brake B3 stops the rotation of the crownwheel K2 of the gear set P2.
The band brake B4 stops the rotation of the sun gear S3 of the gear set P3.

Copyright Fiat Auto

Free wheels

The free wheels consist of two concentric races and a cage which encloses a set of asymmetrical pawls, which permit relative rotation of the two races in one direction (A), while in the opposite direction the pawls jam (B), preventing relative rotation and providing a reaction torque.

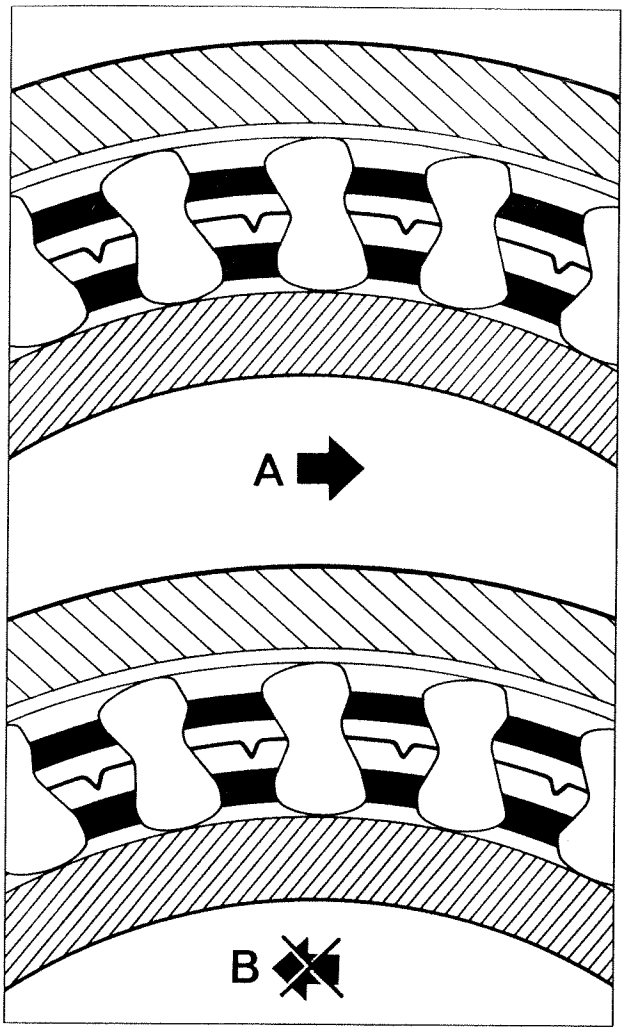

P3U10DB01

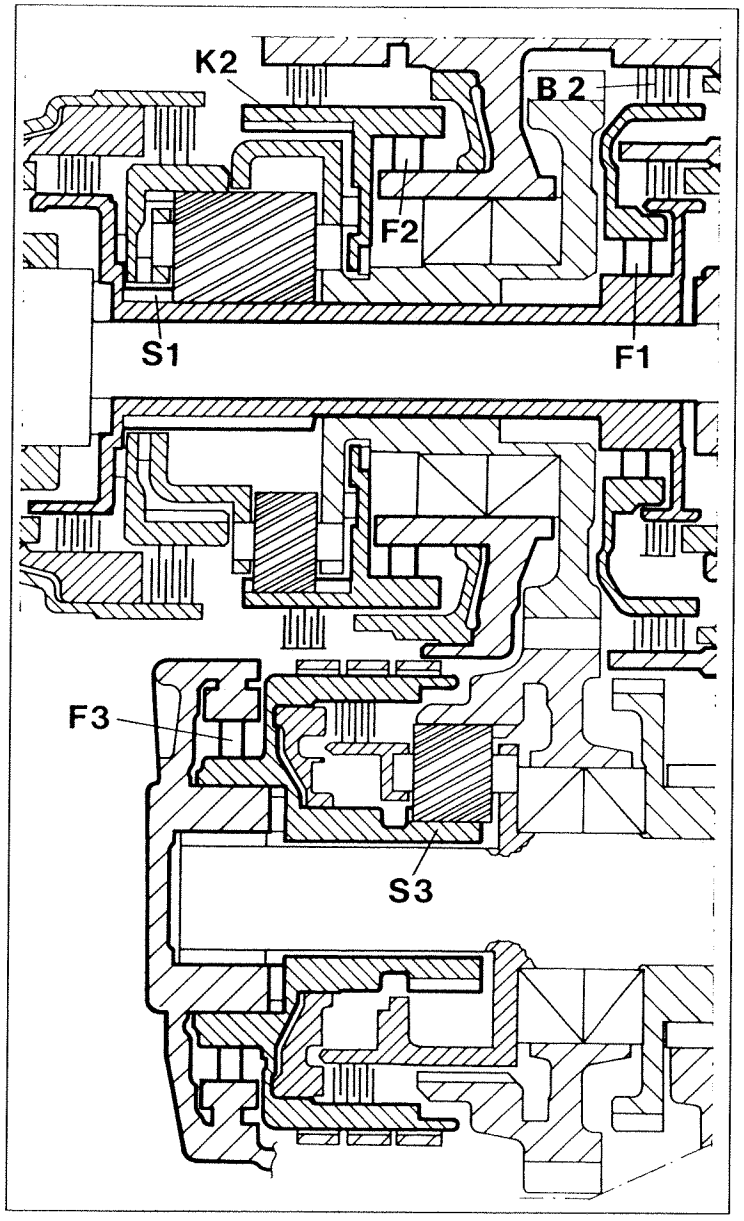

P3U10DB02

The free wheel F1 prevents anti-clockwise rotation of the sun gear S1 shared by the gear sets P1 and P2, when the brake B2 is on.
The free wheel F2 prevents the anti-clockwise rotation of the crownwheel K2 of the gear set P2.
The free wheel F3 prevents the clockwise rotation of the sun gear S3 of the gear set P3.

HYDRAULIC CONTROL SYSTEM

The automatic transmission operates by means of the clutches and brakes controlled by hydraulic actuators; these are driven by appropriate valves which move in accordance with commands issued by the control module. The feed is provided by a gear pump, driven directly by the engine through the torque converter.
A cooling radiator keeps the oil temperature within the pre-established limits.

TRANSMISSION OF MOTION

The following diagrams illustrate the transmission of motion in the various driving conditions, showing the control components required to obtain the various transmission ratios.
The following table shows the components activated in accordance with the engaged gear and the position of the selector lever.

SELECTOR LEVER POSITION		C1	C2	C3	B1	B2	B3	B4	F1	F2	F3
P	PARK							●			
R	REVERSE		●				●	●			
N	NEUTRAL							●			
D	1st	●						●		●	●
	2nd	●			●	●		●	●		●
	3rd	●		●	●	●			●		
	4th	●	●	●		●					
3	1st	●						●		●	●
	2nd	●			●	●		●	●		●
	3rd	●		●	●	●			●		
2	1st	●						●		●	●
	2nd	●			●	●		●	●		●
1	1st	●					●	●		●	●

Neutral (selector lever on position N)

The main shaft turns in a clockwise direction. All the multiplate clutches and multidisc brakes are released, so motion is not transmitted to the epicyclic gears and hence the layshaft.
The band brake B4 locks the sun gear S3 of the gear set P3, preventing its rotation.
The parking lock is released, so the satellites ST3 are free to rotate around the sun gear S3 and the vehicle starts moving if it is on a slope.

Copyright Fiat Auto

Park (selector lever on position **P**)

The only difference in relation to the previous condition is that the parking lock (P) is engaged, which prevents the vehicle from moving.

NOTE *The brake B4 is operated when the selector lever is in the P or N position in order to reduce the stresses caused by the application of several brakes and clutches simultaneously when the lever is moved to the D or R position. Since the brake B4 has to be operated in both 1st gear and reverse gear, operating it also in N and P consequently reduces simultaneous couplings.*

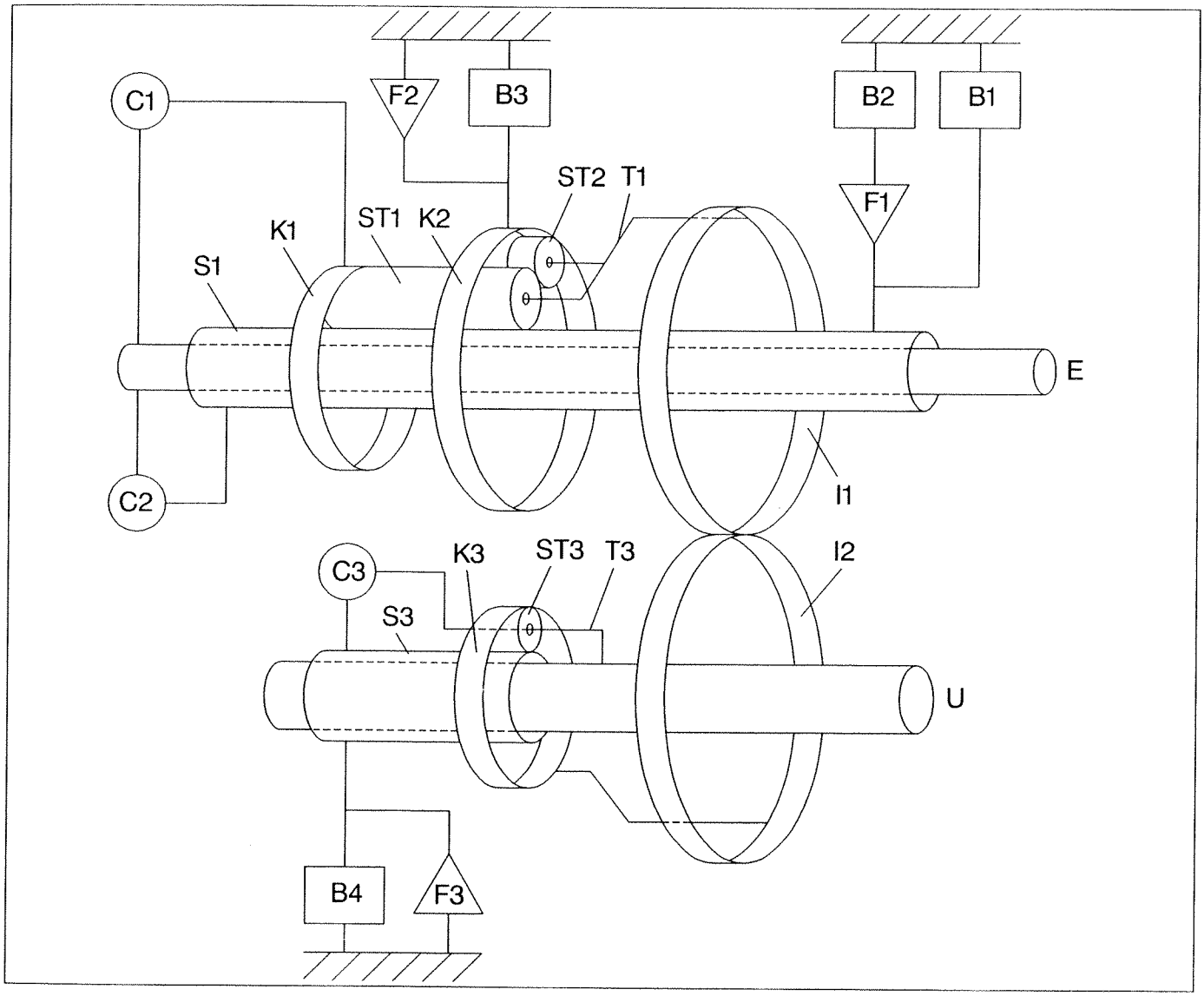

P3U12DB01

First gear (selector lever on position **1**)

Main shaft
The main shaft E turns in a clockwise direction and is coupled by the clutch C1 to the crownwheel K1 of the rear gear set P1, which also rotates in a clockwise direction.
The long satellites ST1, shared by the gear sets P1 and P2, rotate in a clockwise direction.
The short satellites ST2 of the gear set P2 rotate in an anti-clockwise direction, thus proceeding in a clockwise direction on the crownwheel K2 of the front gear set P2, the rotation of which is prevented by the brake B3.
The gear train carrier T1, locked with the central driving gear I1, rotates clockwise at a slower speed than the main shaft.

Layshaft
The central driven gear I2, locked with the crownwheel K3 of the gear set P3, turns in an anti-clockwise direction, making the satellites ST3 of the gear set P3 also rotate anti-clockwise. They proceed in an anti-clockwise direction on the sun gear ST3, locked by the brake B4 and free wheel F3.
The gear train carrier T3, locked with the layshaft U on which the differential pinion is mounted, rotates anti-clockwise at a slower speed than the driven central gear I2.

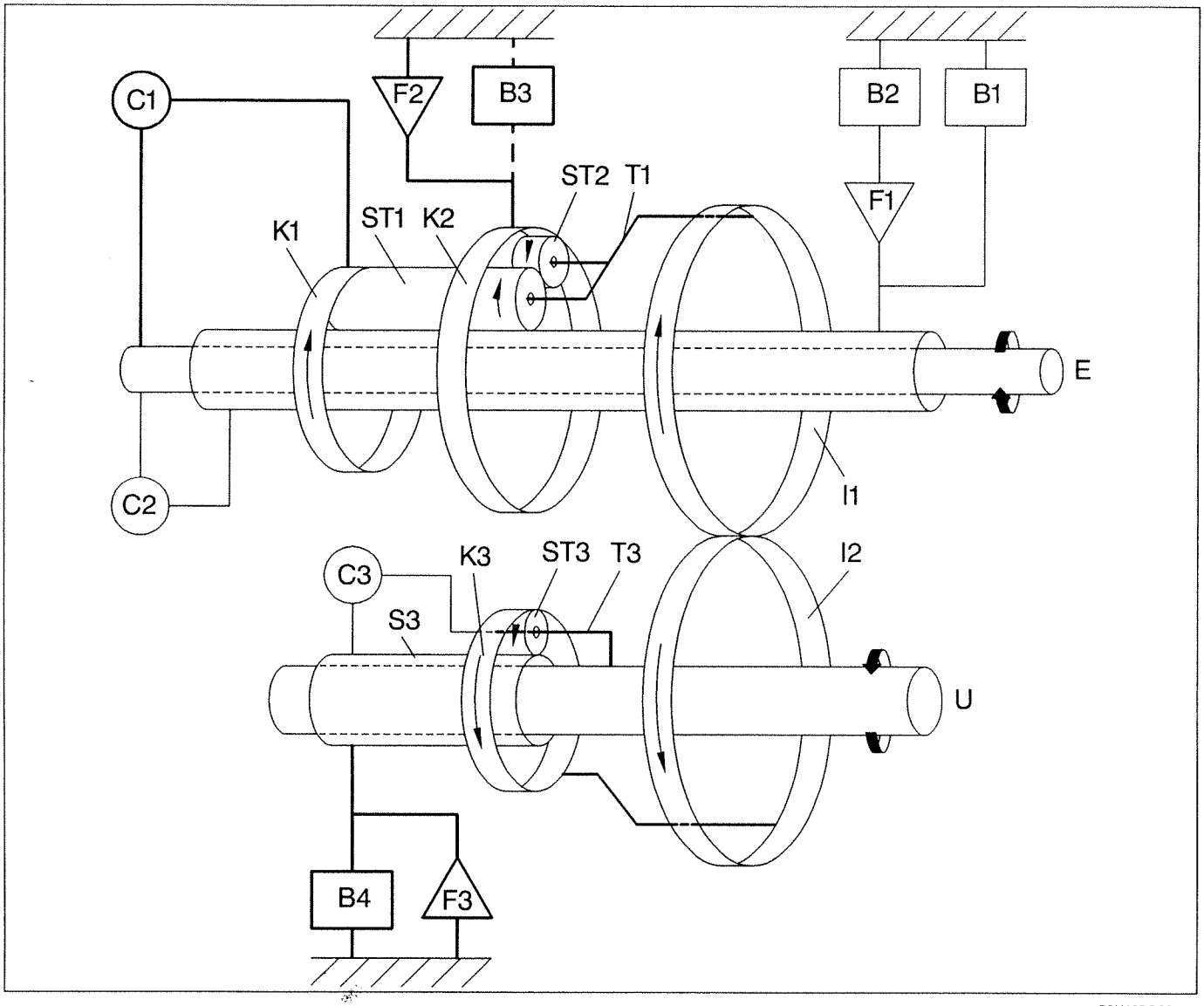

First gear (selector lever on position **D-3-2**)

With the selector lever on one of the three positions, the gearbox operates in a similar way and with the same transmission ratio as when the selector lever is in position 1, with the only difference that the crownwheel K1 of the front gear set P1 is not locked by the brake B3.
Since the torque acting on the crownwheel K1 is much greater than that acting on the gear train carrier T1, the crownwheel would start rotating in an anti-clockwise direction, but the free wheel F2 prevents this rotation, allowing motion to be transmitted to the gear train carrier and so to the layshaft U, as in the preceding case.
In this case, however, there is no engine braking, since the crownwheel K1 can rotate freely in a clockwise direction, allowing the gear train carrier T1 to rotate at a higher speed than that imposed by the transmission ratio.

Copyright Fiat Auto

Second gear (selector lever on position **D-3-2**)

Main shaft

The main shaft E rotates in a clockwise direction and is coupled by the clutch C1 to the crownwheel K1 of the rear gear set P1, which also rotates clockwise.
The satellites ST1, shared by the gear sets P1 and P2, rotate in a clockwise direction, proceeding in a clockwise direction on the sun gear S1 shared by the gear sets P1 and P2, whose rotation in both directions is prevented by the brakes B1 and B2 and the free wheel F1.
The gear train carrier T1, locked with the central driving gear I1, rotates clockwise at a slower speed than the main shaft.

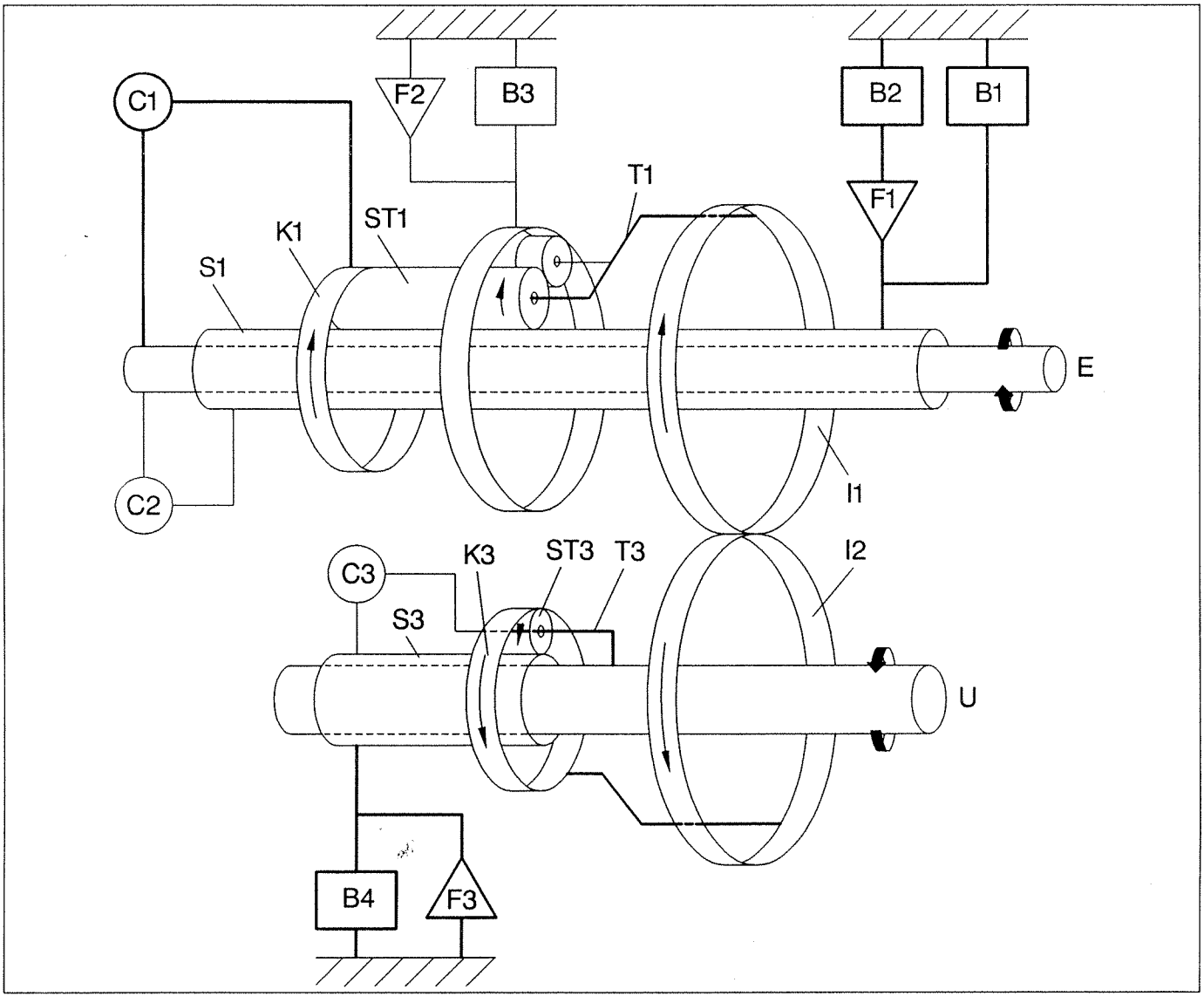

P3U14DB01

Layshaft

The operation of the layshaft is identical to first gear.
The central driven gear I2, locked with the crownwheel K3 of the gear set P3, rotates in an anti-clockwise direction, also making the satellites ST3 of the gear set P3 rotate anti-clockwise. They proceed in an anti-clockwise direction on the sun gear ST3, locked by the brake 4 and free wheel F3.
The gear train carrier T3, locked with the layshaft U, rotates in an anti-clockwise direction at a slower speed than the central driven gear I2.

Third gear (selector lever on posizione **D-3**)

Main shaft

The operation of the main shaft is the same as for second gear.
The main shaft E rotates in a clockwise direction and is coupled by the clutch C1 to the crownwheel K1 of the rear gear set P1, which also rotates clockwise.
The satellites ST1, shared by the gear sets P1 and P2, rotate clockwise, proceeding in a clockwise direction on the sun gear S1 shared by the gear sets P1 and P2, whose rotation in both directions is prevented by the brakes B1 and B2 and the free wheel F1.
The gear train carrier T1, locked with the central driving gear I1, rotates in a clockwise direction at a slower speed than the main shaft.

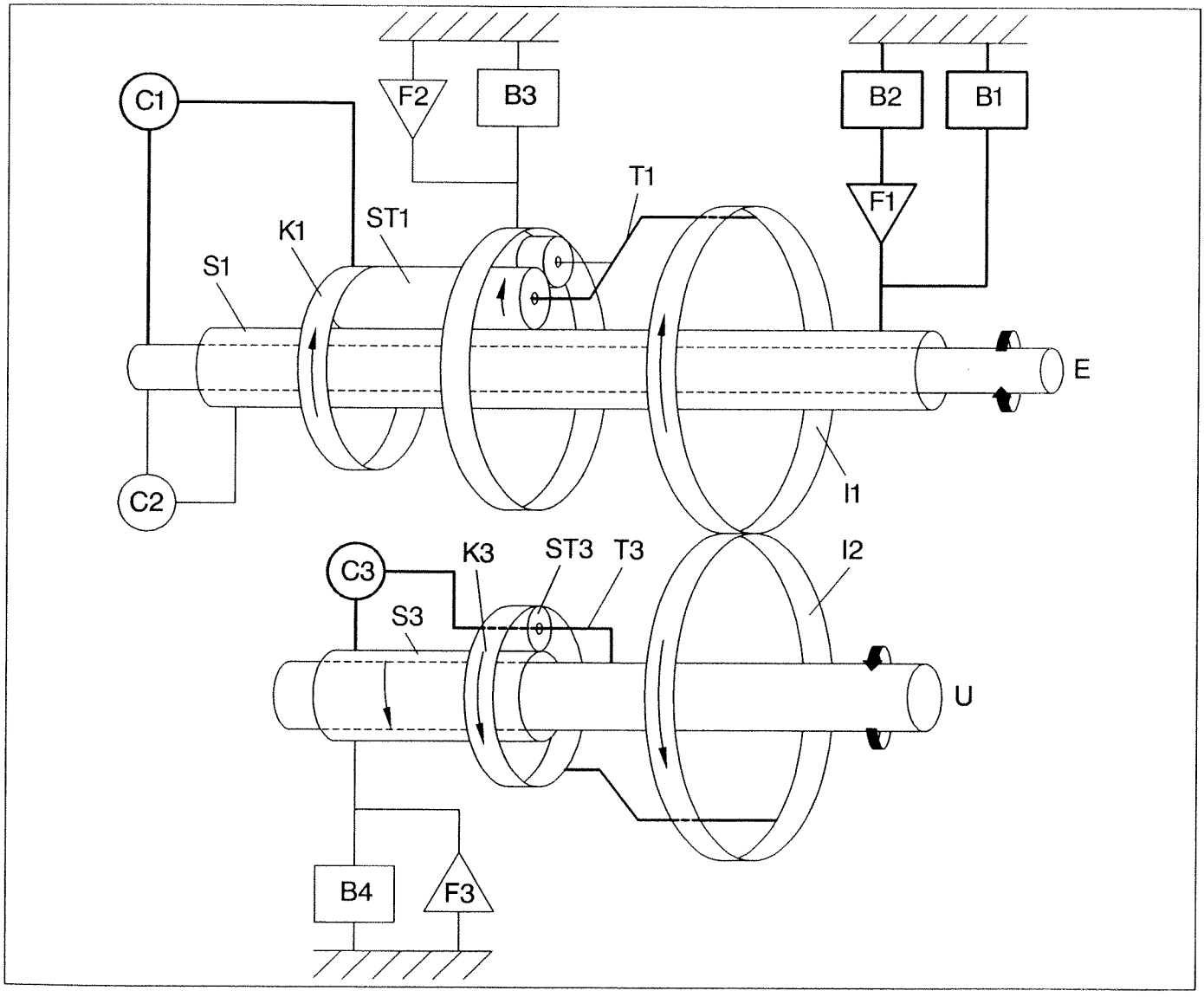

Layshaft

The central driven gear I2, locked with the crownwheel K3 of the gear set P3, rotates in an anti-clockwise direction.
The clutch C3 couples the sun gear S3 and gear train carrier T3 of the gear set P3, preventing their relative rotation; consequently the satellites ST3 cannot rotate on their axis and so the entire gear set P3 rotates as a single unit.
The gear train carrier T3, locked with the layshaft U, rotates in an anti-clockwise direction at the same speed as the central driven gear I2.

Copyright Fiat Auto

Fourth gear (selector lever on position **D**)

Main shaft

The main shaft E rotates in a clockwise direction and is coupled by the clutches C1 and C2 respectively to the crownwheel K1 of the rear gear set P1 and the sun gear S1 shared by the gear sets P1 and P2. Consequently the satellites ST1 and ST2 cannot rotate on their axis and the gear sets P1 and P2 rotate as a single unit. The gear train carrier T1, locked with the central driving gear I1, rotates in a clockwise direction at the same speed as the main shaft.

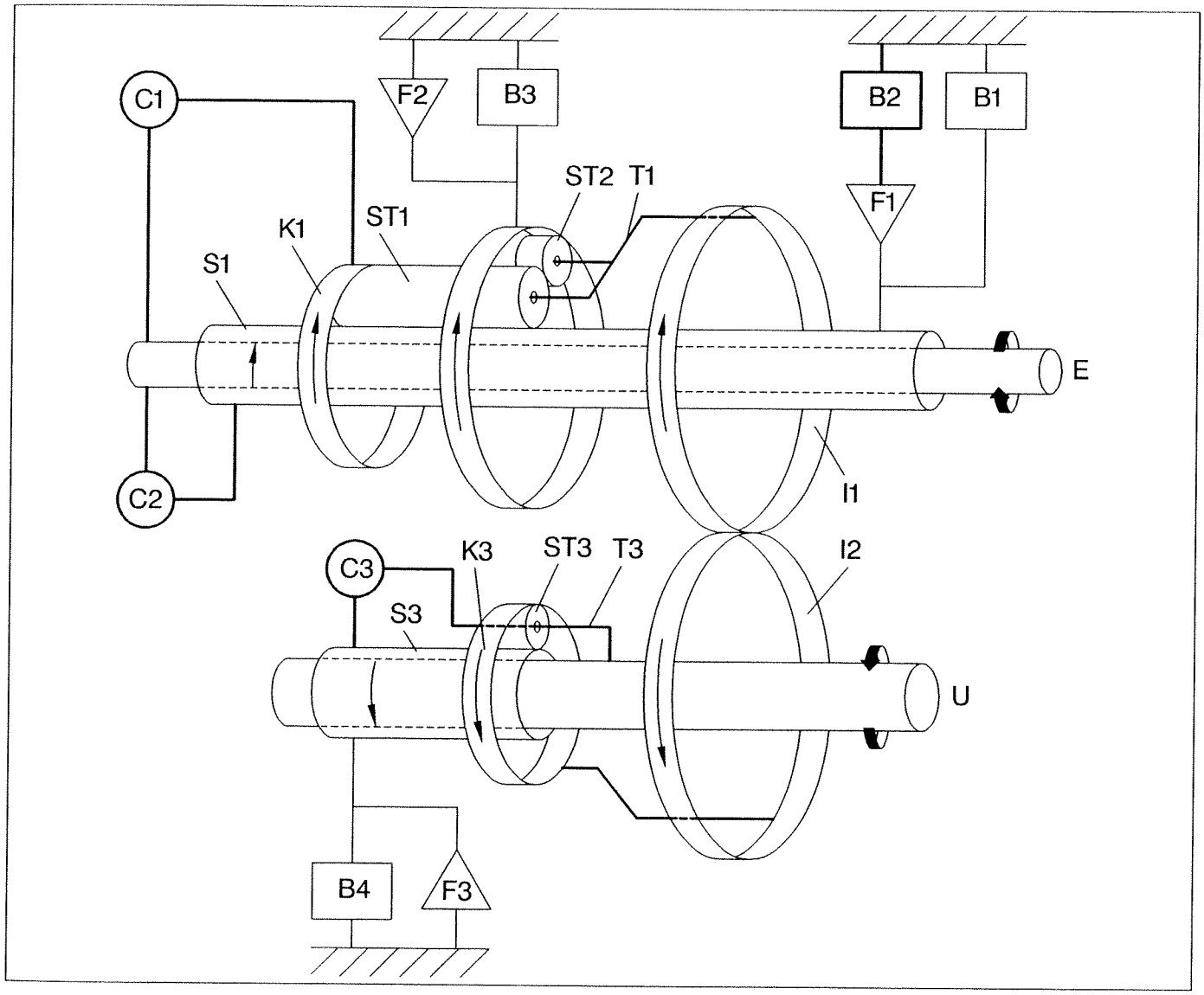

P3U16DB01

Layshaft

The operation of the layshaft is the same as for third gear.

The central driven gear I2, locked with the crownwheel K3 of the gear set P3, rotates in an anti-clockwise direction.

The clutch C3 couples the sun gear S3 to gear train carrier T3 of the gear set P3, preventing their relative rotation; consequently the satellites ST3 cannot rotate on their axis and so the entire gear set P3 rotates as a single unit.

The gear train carrier T3, locked with the layshaft U, rotates in an anti-clockwise direction at the same speed as the central driven gear I2.

NOTE *It may be observed that in fourth gear, used mainly on long motorway journeys, the ratio 1:1 is achieved; this permits very low wear since there is no rotation between the three epicyclic gears.*

Reverse (selector lever on position **R**)

Main shaft

The main shaft E rotates in a clockwise direction and is coupled by the clutch C2 to the sun gear S1 shared by the gear sets P1 and P2, which also rotates clockwise.
The satellites ST1, shared by the gear sets P1 and P2, rotate in an anti-clockwise direction.
The satellites ST2 of the gear set P2 thus rotate in a clockwise direction, proceediing in an anti-clockwise direction on the crownwheel K2 of the front gear set P2, whose rotation is prevented by the brake B3.
The gear train carrier T1, locked with the central driving gear I1, rotates in an anti-clockwise direction, at a lower speed than the main shaft.

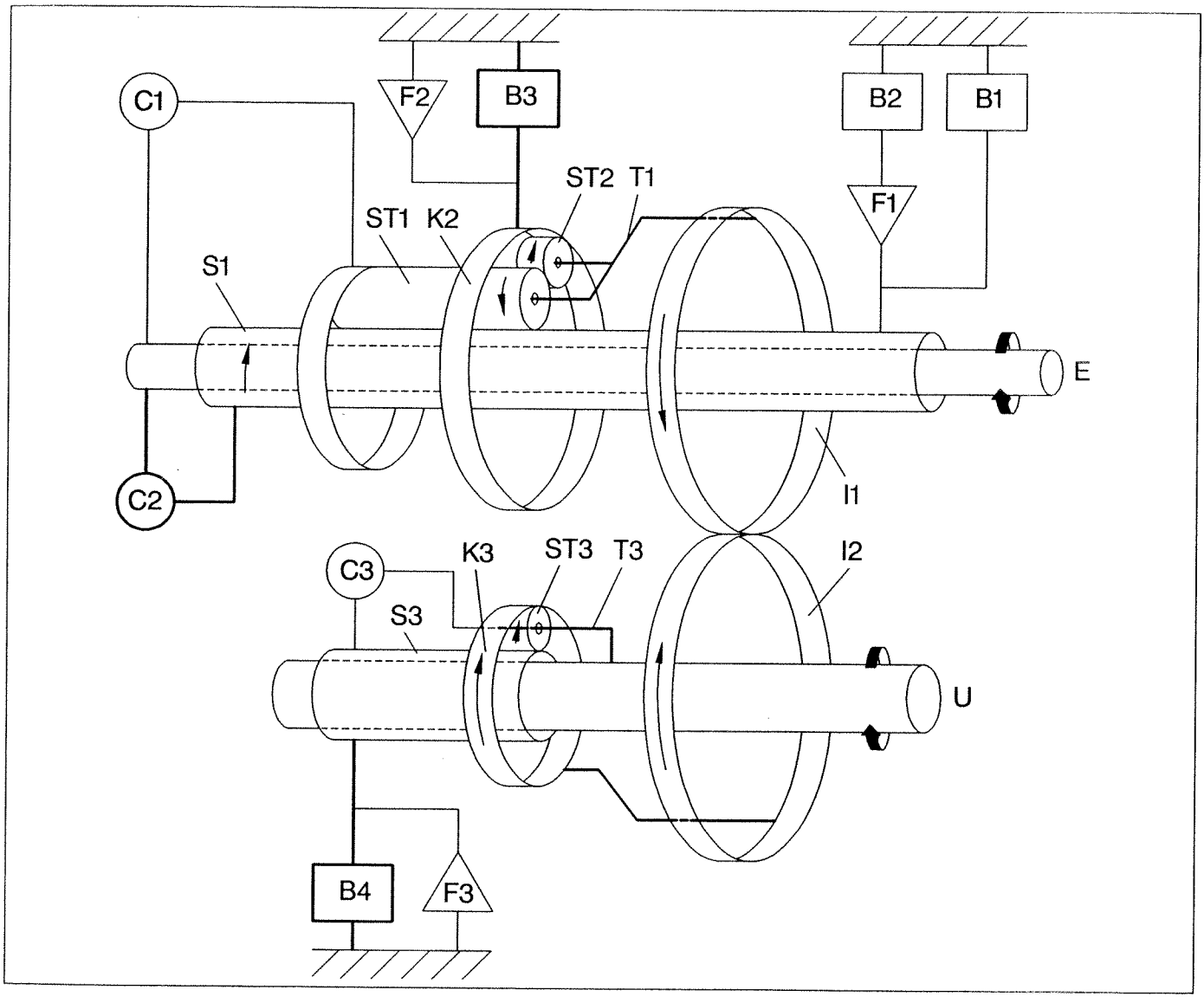

P3U17DB01

Layshaft

The operation of the layshaft is the same as for first gear, but with rotation in the opposite direction.
The central driven gear I2, locked with the crownwheel K3 of the gear set P3, rotates in a clockwise direction, also making the satellites ST3 of the gear set P3 rotate clockwise. They proceed in a clockwise direction on the sun gear S3, locked by the brake F4 and free wheel F3.
The gear train carrier T3, locked with the layshaft U, rotates in a clockwise direction at a slower speed than the central driven gear I2.

Copyright Fiat Auto

21-27.

ELECTRONIC CONTROL SYSTEM

The electronic control system of the AISIN automatic transmission consists of a control module, some switches and sensors which inform the control module of the different operating conditions and four actuators which receive the commands from the control module and interact with the hydraulic control system to obtain engagement of the various gears.
The control module also sends signals to the instrument panel and exchanges information with the fuel injection-ignition control unit and the diagnostic socket.

Location on car of control system components of the AISIN AW 596/Y016 automatic transmission

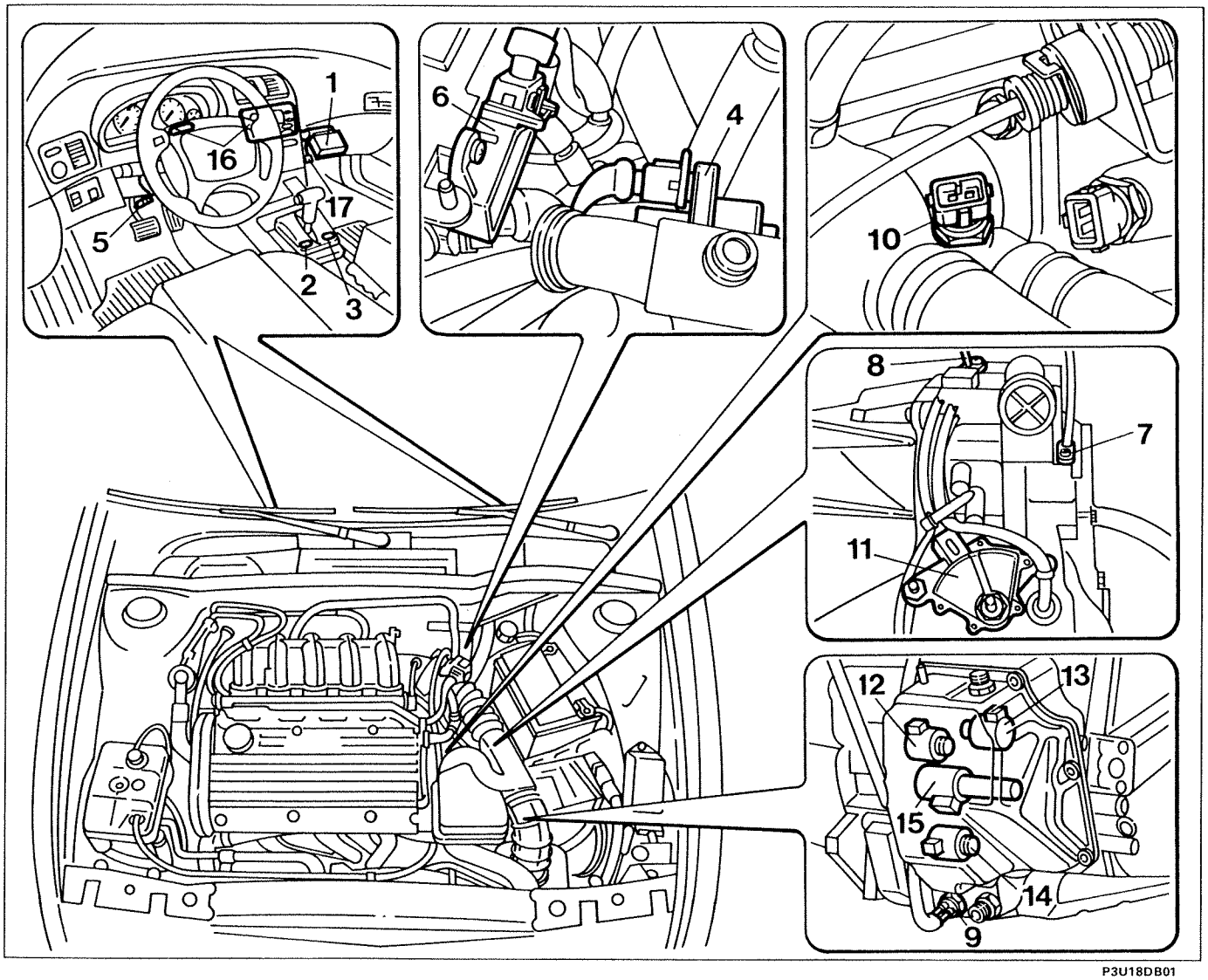

P3U18DB01

1. Transmission control module
2. NORMAL/POWER mode switch
3. ICE mode switch
4. Kick-down switch
5. Stop lights switch
6. Throttle position sensor
7. Main shaft rpm sensor
8. Vehicle speed sensor
9. Gearbox oil temperature sensor
10. Engine coolant temperature sensor
11. Selector lever position sensor
12. Gear engagement solenoid S1
13. Gear engagement solenoid S2
14. Lock-up clutch solenoid SL
15. Pressure control solenoid STH
16. Instrument panel and Infocenter
17. Diagnostic socket

CONTROL MODULE

The control module contains the electronic control logic of the automatic transmission, in which the various functions are stored in memory, and it is located under the dashboard on the passenger side.

The control module receives information concerning the operation of the automatic transmission from the various switches and sensors located on the gearbox, engine and dashboard and issues the appropriate commands to four solenoids contained in a valve assembly located at the front of the automatic transmission, and to the fuel injection/ignition control unit to reduce the torque under particular operating conditions.

Functions of the control module

On the basis of commands received from the driver via the various switches and the signals coming from the sensors concerning the operating conditions, the control module ensures correct operation of the gearbox by means of the following functions:
- it effects gear changes;
- locks the torque converter (lock-up function);
- sets the driving mode;
- makes hydraulic pressure variations;
- checks gear change times;
- checks gear changes;
- safety function;
- self-test function.

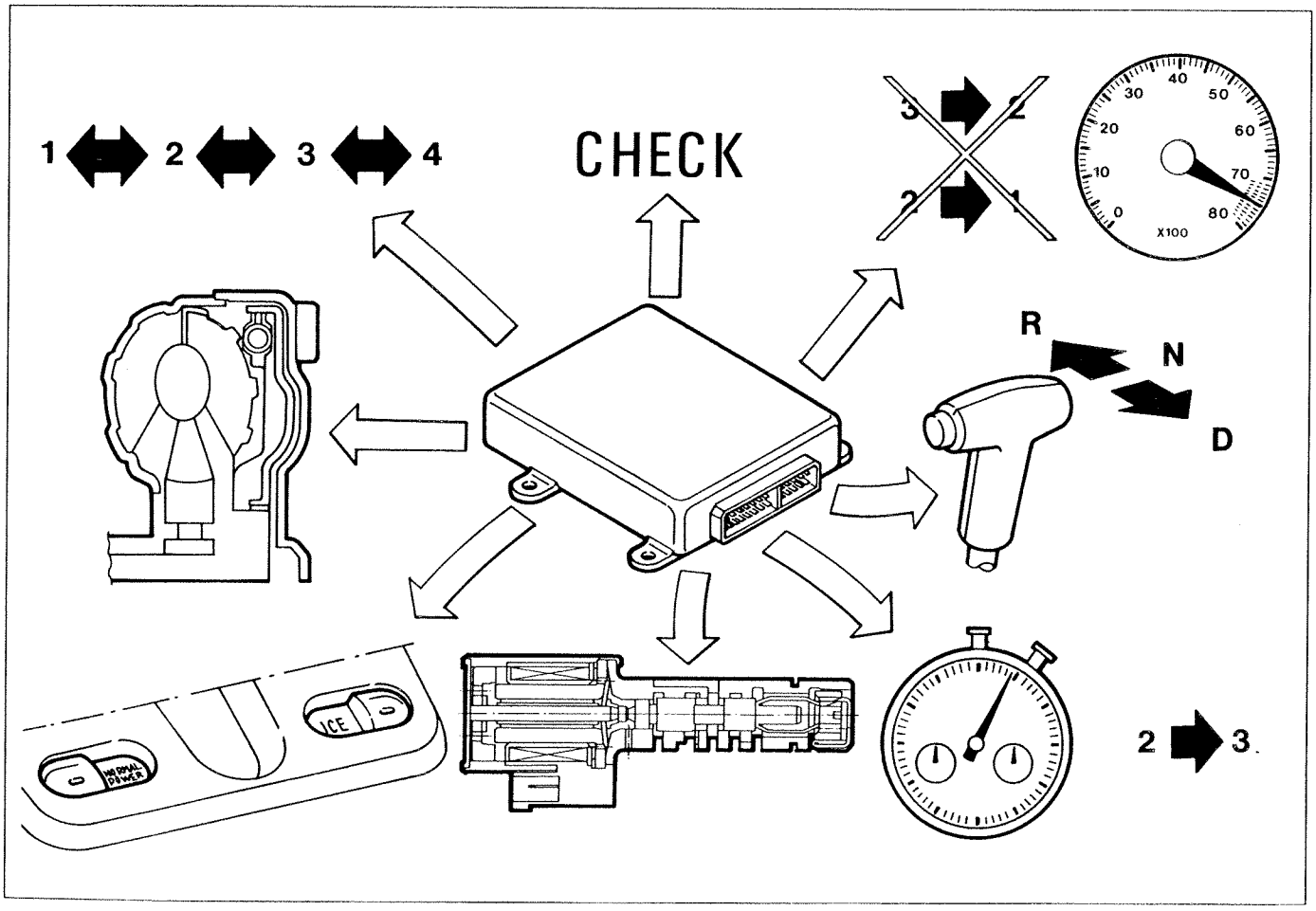

P3U19DB01

Diagram of input and output information to/from the control module

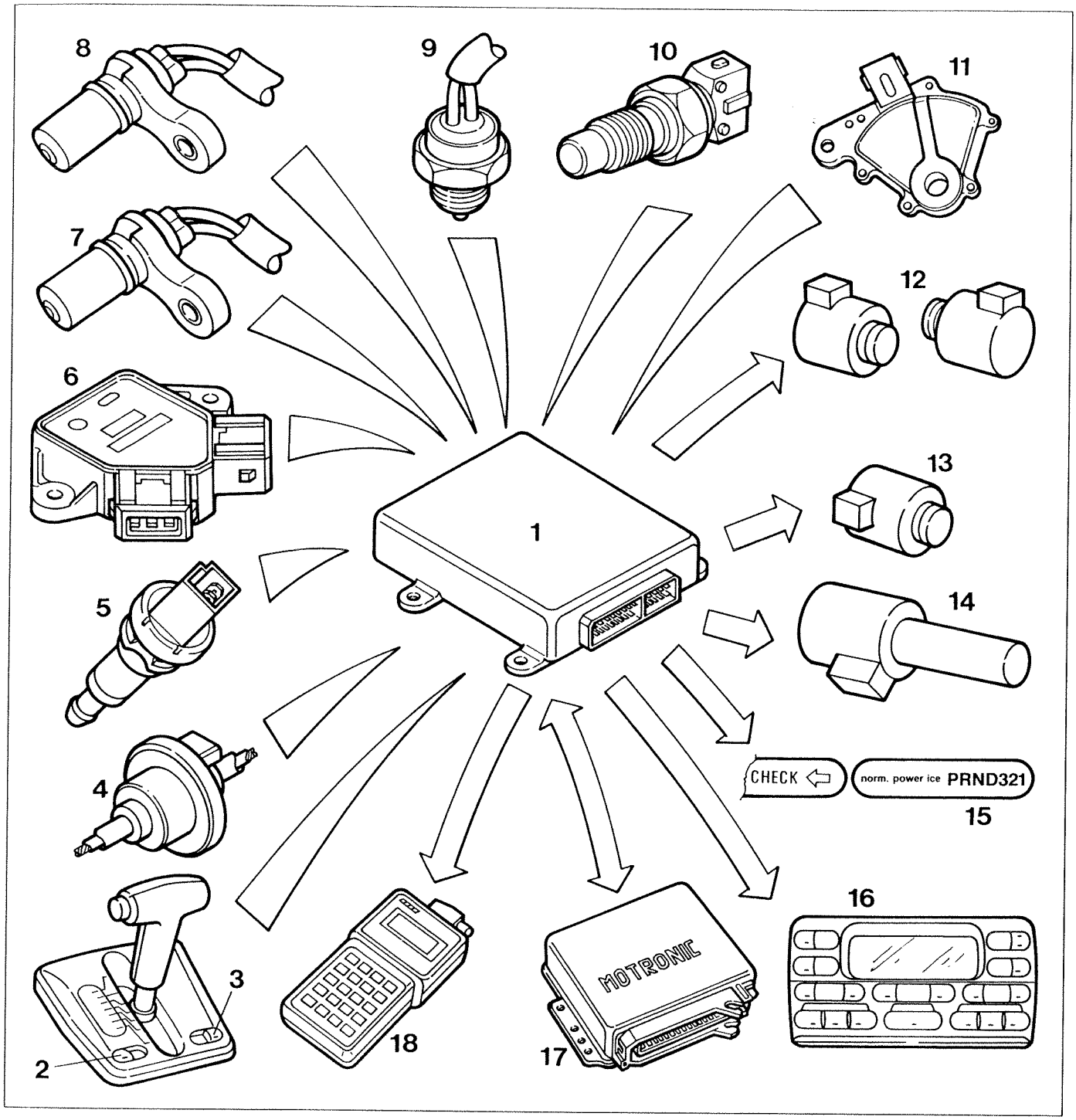

P3U20DB01

1. Transmission control module
2. NORMAL/POWER mode switch
3. ICE mode switch
4. Kick-down switch
5. Stop lights switch
6. Throttle position sensor
7. Main shaft rpm sensor
8. Car speed sensor
9. Gearbox oil temperature sensor
10. Coolant temperature sensor
11. Selector lever position sensor
12. Gear engagement solenoids S1 and S2
13. Lock-up clutch solenoid SL
14. Pressure control solenoid STH
15. Instrument panel
16. Infocenter
17. Fuel injection/ignition control unit
18. Diagnostic socket

Identification of the control module connections

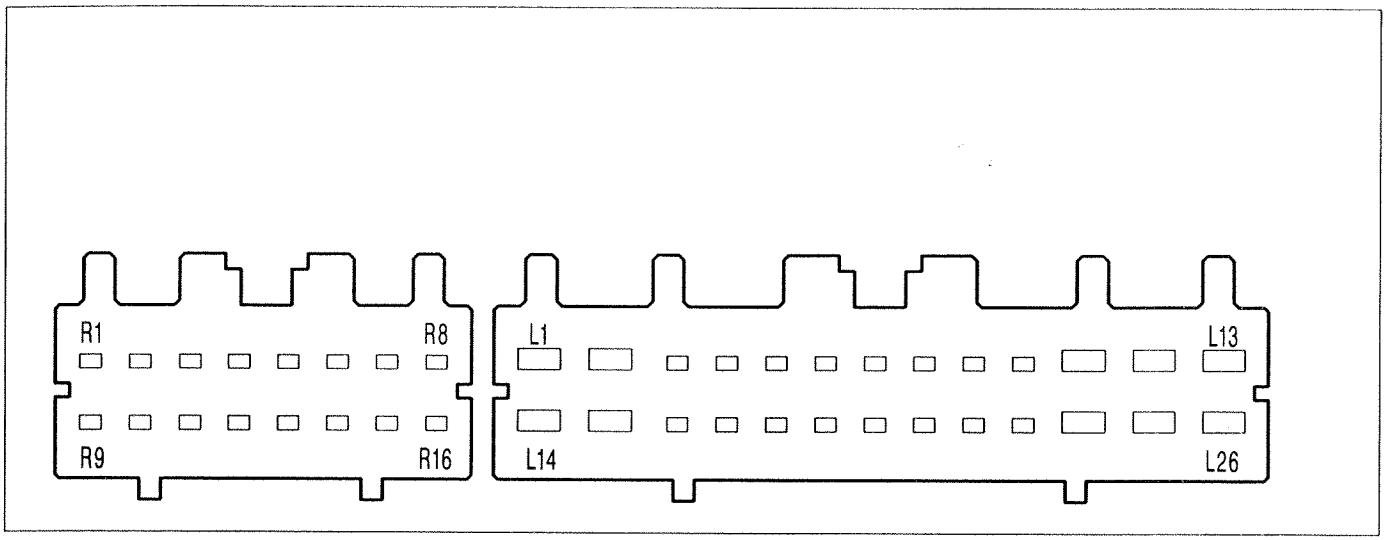

P3U21DB01

View of control module, connector side

Pin	Connection	Pin	Connection
R1	NC	L1	Pressure control solenoid STH (-)
R2	Earth on speed sensor cable shielding	L2	Earth
R3	Main shaft rpm sensor (-)	L3	Selector lever position sensor (A)
R4	Vehicle speed sensor (-)	L4	NC
R5	NORMAL/POWER mode switch	L5	Gearbox oil temperature sensor (-)
		L6	Throttle position sensor (Vth)
R6	Kick-down switch	L7	Throttle position sensor (-)
R7	Selector lever position sensor (C)	L8	Earth
R8	NC	L9	STOP lights switch
R9	Fuel injection-ignition control unit	L10	Display on instrument panel - Selector lever position - Driving mode - Fault indicator
R10	Engine coolant temperature sensor		
R11	Main shaft rpm sensor (+)		
R12	Vehicle speed sensor (+)	L11	Pressure control solenoid STH (+)
R13	NC	L12	Battery earth
R14	ICE mode switch	L13	Solenoid S1 (1-2, 3-4)
R15	NC	L14	NC
R16	Selector lever position sensor (PA)	L15	NC
		L16	Selector lever position sensor (B)
		L17	NC
		L18	Gearbox oil temperature sensor (+)
		L19	NC
		L20	Throttle position sensor (+)
		L21	Diagnostic socket earth (line G)
		L22	Diagnostic socket (line L)
		L23	Diagnostic socket (line K)
		L24	Lock-up clutch solenoid SL
		L25	Key-dependent positive (MAR)
		L26	Solenoid S2 (2-3)

Copyright Fiat Auto

PRINCIPLES OF OPERATION

Effecting gear changes

The change from one gear to the next higher or lower gear depends on the position of the accelerator pedal, the car speed, the engine's characteristic parameters and the driving mode selected by the driver.
The control module sends a duty-cycle signal to the solenoids S1 and S2.
These permit or prevent the oil from reaching the brakes and clutches necessary for achieving the different transmission ratios, switching their condition from ON to OFF and vice versa as shown in the following table.

Gear	Solenoid S1	Solenoid S2
1st	OFF	ON
2nd	ON	ON
3rd	ON	OFF
4th	OFF	OFF

The change from 3rd to 4th gear is prevented if the coolant temperature is less than 75°C.

The control module has specific gear change programs memorized for each driving mode (NORMAL, POWER, ICE), which will be described on the following pages in the sub-section relating to driving modes.

Locking the torque converter (lock-up function)

The engagement of the lock-up clutch to lock the torque converter depends on the gear engaged, the position of the accelerator pedal, the vehicle speed and the selected driving mode.
The control module sends a duty-cycle signal to the lock-up control solenoid SL, which intercepts the passage of oil to the rear side of the clutch, causing it to engage.

The control module has two specific torque converter locking programs stored in memory for the NORMAL and POWER driving modes. There is no torque converter locking for the ICE mode.
These programs will be described on the following pages in the sub-section relating to driving modes.

The converter is not locked in the following conditions:

1. when the control system receives a fault signal from one of the components and carries out the recovery function;
2. when the brake pedal is pressed and the gearbox input speed is lower than a particular value;
3. when the throttle valve is closed (accelerator pedal not pressed) and the vehicle speed is less than 125 km/h with the selector lever in position D;
4. when the engine coolant temperature is below 75°C.

During the passage from 3rd to 4th gear, with the lock-up clutch engaged, the control module sends a variable duty-cycle signal to the solenoid SL, in order to momentarily disengage the lock-up clutch to improve the quality of the gear change.

Setting the driving mode

The control module controls the operation of the automatic transmission in accordance with three different driving modes.
The three modes enable the driver to select the different capabilities of the automatic transmission in accordance with momentary driving requirements:
- NORMAL to obtain maximum driving comfort while minimizing fuel consumption;
- POWER to obtain maximum performance from the vehicle;
- ICE to increase driving safety under low grip conditions.

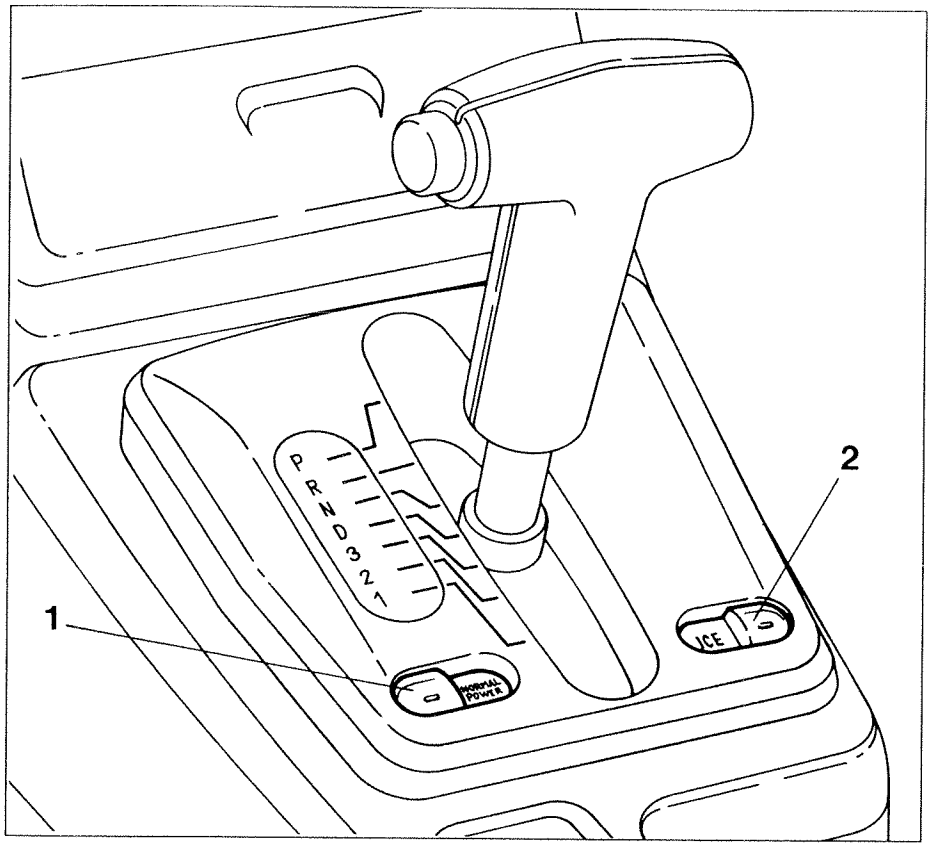

P3U23DB01

1. NORMAL/POWER button switch
2. ICE button switch

At each start-up, the system is set to NORMAL mode.
Press the NORMAL/POWER button switch (1) to change from NORMAL mode to POWER mode and vice versa.
When the ICE button switch (2) is pressed, the ICE mode is used to the exclusion of the other two modes.
Press the ICE button again to return to whichever mode (NORMAL or POWER) was selected previously.

You can change from one mode to another at any time during driving.
The selected mode is displayed beside the indication of the selector lever position on the instrument panel.

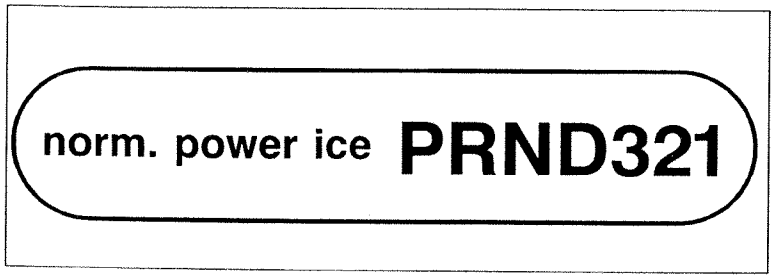

P3U23DB02

Display of the operating mode used and the selector lever position

Copyright Fiat Auto

21-27.

The behaviour of the AISIN automatic transmission depending on the driving mode (NORMAL, POWER or ICE) is described below.
The typical curves for changing between the four ratios and the locking of the lock-up clutch are shown, both during progression and during reduction of the ratio (graduated), expressed in relation to the percentage of aperture of the throttle valve and the vehicle speed.

Operation in NORMAL mode

The NORMAL mode is selected by the control module whenever the engine is started.
Very smooth operation is ensured in this mode, orientated towards optimizing driving comfort and economy.

Gearchange program

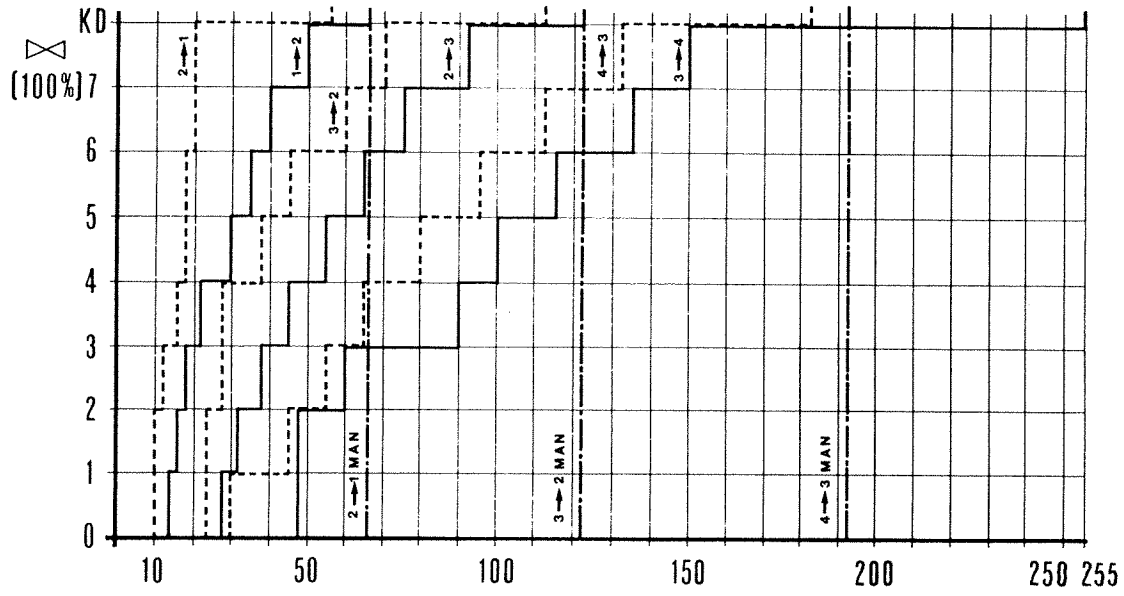

P3U24DB01

Lock-up program

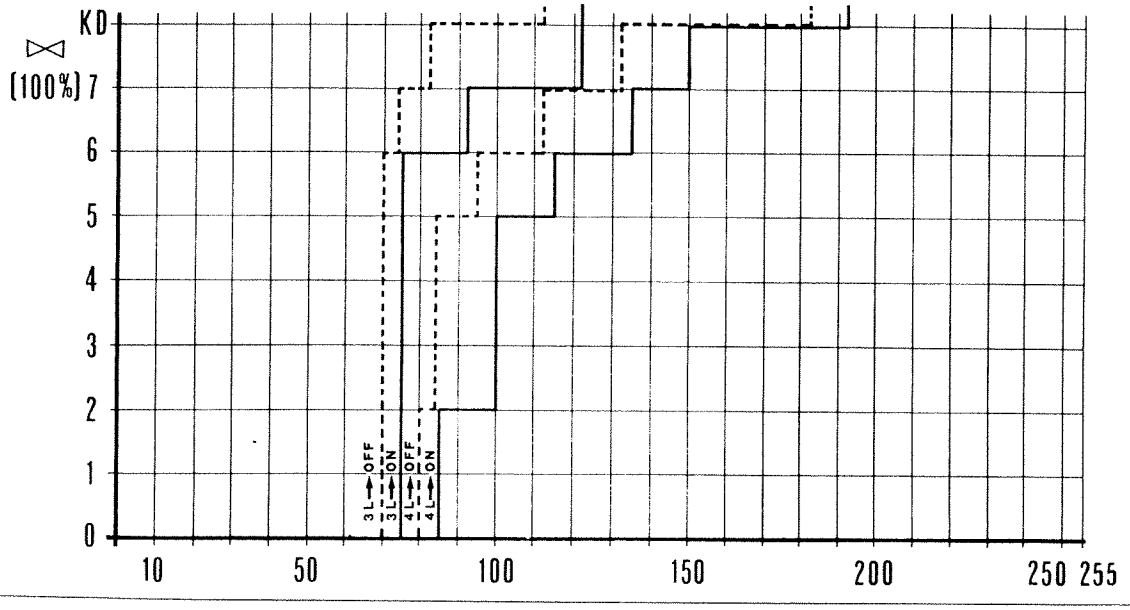

P3U24DB02

Operation in POWER mode

The control module switches to POWER mode when the NORMAL/POWER button switch, located on the left of the selector lever, is pressed.
This driving mode is designed for full utilization of the power, in order to obtain the maximum level of performance from the car: with the same throttle valve aperture, the changes to higher ratios are automatically shifted to a higher rpm.
The POWER strategy does not use 4th gear (cruising gear).

Gear change program

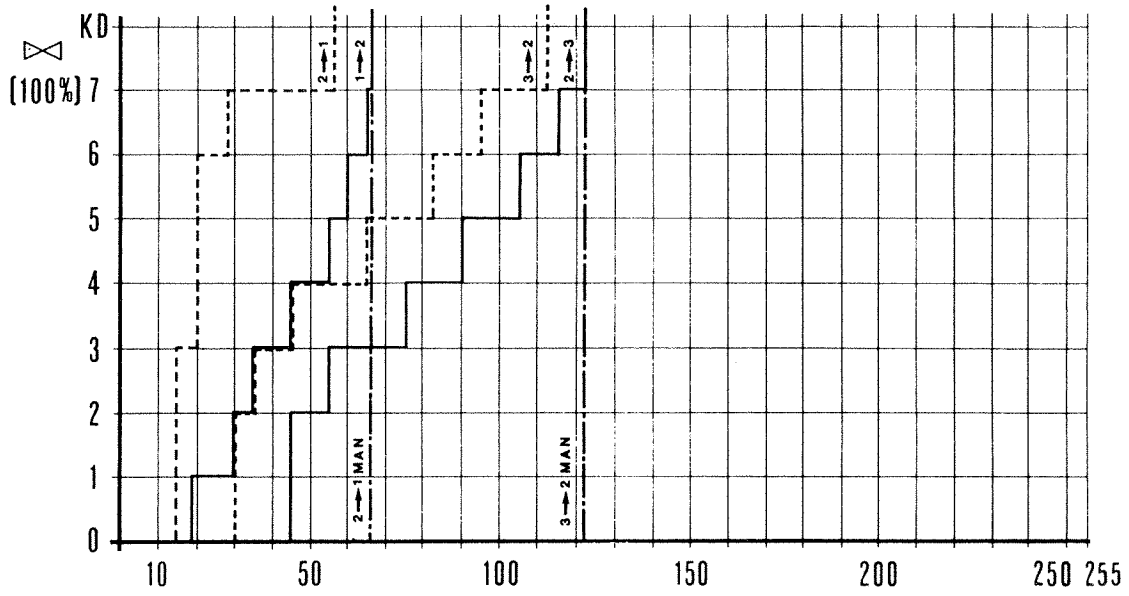

P3U25DB01

Lock-up program

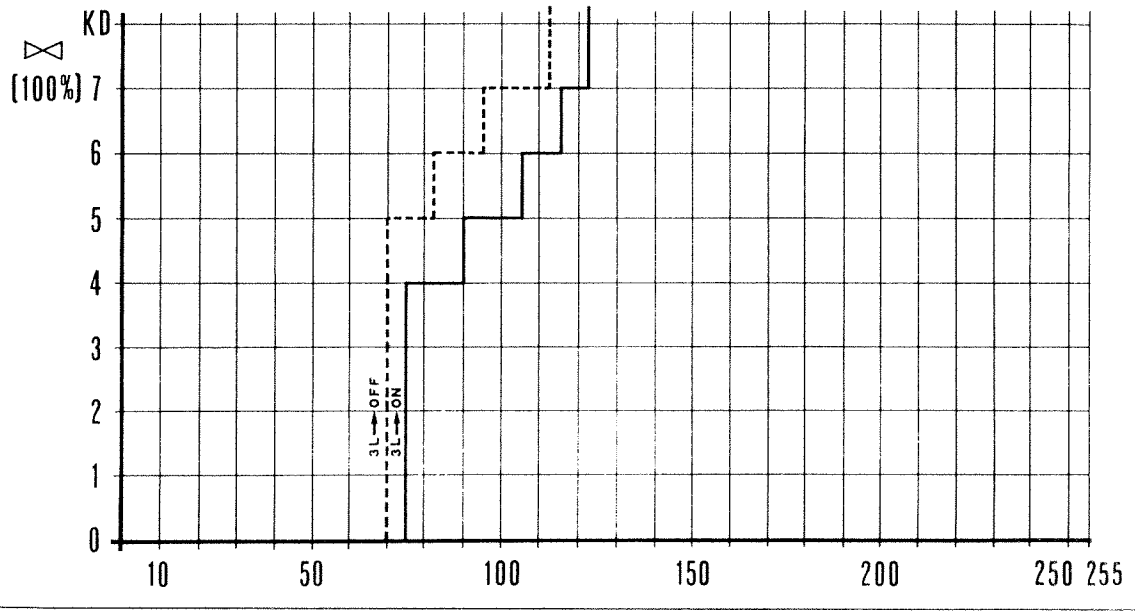

P3U25DB02

The POWER driving mode is excluded in the following cases:

1. if the NORMAL/POWER button switch is pressed again;
2. if the ICE button switch is pressed;
3. operation in recovery conditions.

Copyright Fiat Auto

Operation in ICE mode

The ICE mode can be selected by pressing the ICE button switch on the right of the selector lever when the latter is in position D. This mode improves the safety of driving on roads with low grip, and facilitates pickup during the starting stage.
When ICE mode is selected, the lock-up clutch is not locked.

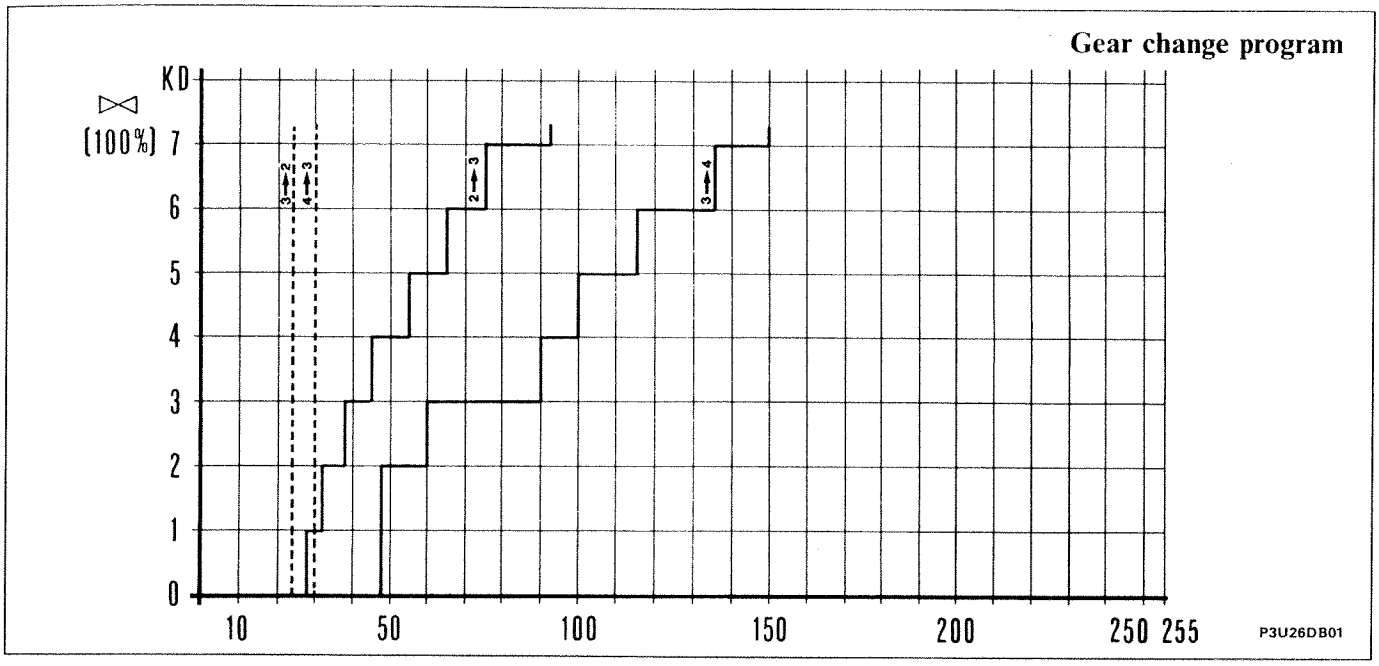

The ICE driving mode is excluded in the following cases:

1. if the ICE button switch is pressed again;
2. if the selector lever is not at the D position;
3. if the kick-down switch is operated for over two seconds;
4. if the engine switches off;
5. over a speed of 45 km/h,
6. it the transmission oil temperature exceeds the limits;
7. operation in recovery conditions.

The table below shows the ratios which the gearbox uses automatically during driving, in relation to the driving mode and the selector lever position, and shows the transmission ratio used to start.

Selected driving mode	Selector lever position	Ratio selected to start	Automatic management 1 2 3 4
NORMAL or POWER	D	1st	
	3	1st	
	2	1st	
	1	1st	
ICE	D	2nd	

P3U26DB02

Variations in hydraulic pressure

The pressures in the hydraulic system are controlled by the control module, in order to carry out the following functions:
- increase in cold line pressure;
- reduction in line pressure when changing from N to R;
- modulation of driving pressure.

Increase in cold line pressure

With the selector lever in the N position, when the transmission oil temperature is below 10°C and the vehicle speed is below 7 km/h, the control module sends a signal, for 5 seconds, to the STH solenoid for controlling the line pressure.
In this way the line pressure increases, enabling the time for engaging 1st gear or reverse gear to be reduced.

This function is excluded in the following cases:
- transmission oil temperature over 20°C;
- car speed over 7 km/h;
- selector lever not in N position.

Reduction of the line pressure when changing from N to R

When the selector lever is moved from the N to the R position, the control module sends a signal to the STH solenoid to control the line pressure.
This makes the line pressure decrease, in order to reduce the jolt caused by the engagement of reverse gear.

Modulation of driving pressure

The driving pressure on the hydraulic valves (throttle pressure) is increased by the control module, in accordance with the throttle valve aperture and the vehicle speed.

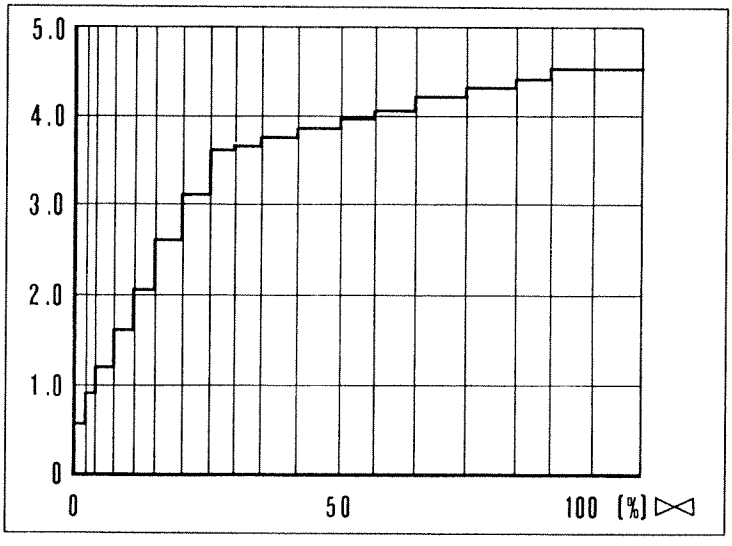

P3U27DB01

Check on gear change times

The control module assesses the time taken for the gear change by comparing the ratios between input and output speeds, provided by the main shaft rpm sensor and vehicle speed sensor respectively, with the memorized values of the transmission ratios of the different speeds.

Copyright Fiat Auto

Check on gear changes

The engagement of gears in an automatic transmission causes jolts due to the sudden change in transmission ratios, which are more accentuated when 1st gear and reverse gear are engaged, permitting higher transmission ratios.

These jolts caused by the engagement of 1st gear and reverse gear are irritating to the occupants and also stress the transmission gears.

To reduce these stresses and improve driving comfort, the AISIN automatic gearbox uses the following features:
- engagement of 1st gear or reverse gear with a reduction in torque (garage function);
- change from N to D with control of pitching (squat);
- change from N to R with reduction of line pressure.

Engagement of 1st gear or reverse gear (garage function)

When the selector lever is moved as follows:
- from N (or P or R) to D (or 3 or 2 or 1);
- from any position to R;

by means of this function, the control module sends a signal to the MOTRONIC fuel injection-ignition electronic control unit in order to reduce the torque, reducing the jolt caused by the engagement of 1st gear or reverse.

Change from N to D with control of pitching (squat)

When the selector lever is moved from the N position to the D position, the control module engages 3rd gear simultaneously, and then moves to 1st gear (or 2nd gear if ICE mode has been selected).
The jolt caused by the engagement of 1st gear and the subsequent pitching of the vehicle are thus reduced.

This function only intervenes if the following conditions arise simultaneously:
- brake pedal pressed (stop lights on);
- throttle valve closed (throttle aperture 0%);
- vehicle speed below 7 km/h;
- NORMAL or POWER driving mode.

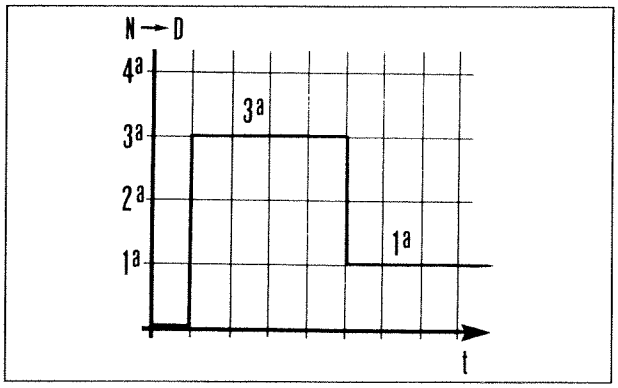

P3U28DB01

Change from N to R with reduction of line pressure

When the selector lever is moved from the N position to the R position, the control module sends a signal to the solenoid STH to control the line pressure.
This makes the line pressure decrease, in order to reduce the jolt caused by the engagement of reverse gear.

Safety function

The control module prevents the engagement of lower ratios (even if the selector lever is moved manually) until the vehicle speed has fallen to particular values, in order to avoid dangerous overrevving of the engine.

Self-test

The electronic control system constantly monitors the sensors, control solenoids and all the other electronic components, in order to detect any faults or malfunctions immediately: these faults are memorized by the control unit and can be read using the FIAT/LANCIA Tester.

Fault detection conditions

The control module can detect faults in the various components only under particular conditions. The following faults can be detected with the ignition switch set to ON or START, with the engine running or with the vehicle moving:
- fault in gear change solenoid S1;
- fault in gear change solenoid S2;
- fault in lock-up clutch control solenoid SL;
- fault in pressure control solenoid STH;
- fault in selector lever position sensor;
- fault in throttle position sensor;
- fault in kick-down switch;
- fault in torque reduction signal transmission check;
- fault in gearbox oil temperature sensor when it still indicates an oil temperature of under 10°C after the engine coolant temperature has reached 75°C.

With the engine running or vehicle moving, the following are detected:
- fault in battery voltage;
- fault in coolant temperature sensor after 10 minutes.

Only when the vehicle is moving, the following are detected:
- fault in gearbox main shaft rpm sensor;
- fault in vehicle speed sensor;
- fault in transmission ratio, when the ratio between the main shaft rpm and the vehicle speed differs from the memorized transmission ratios for longer than one second;
- fault in gear change mechanism when the gear change time exceeds 1.3 seconds or when the change down to a lower ratio is effected at a higher speed than the maximum permitted speed.

Fault memorization

In the case of significant faults, the red CHECK warning light (1) on the instrument panel starts to flash, and the relevant fault message is displayed by the Infocenter (2) for 60 seconds. When the fault is memorized, the red CHECK warning light (1) stays on permanently.
If the gearbox oil temperature exceeds 100°C, the red CHECK warning light continues to flash.

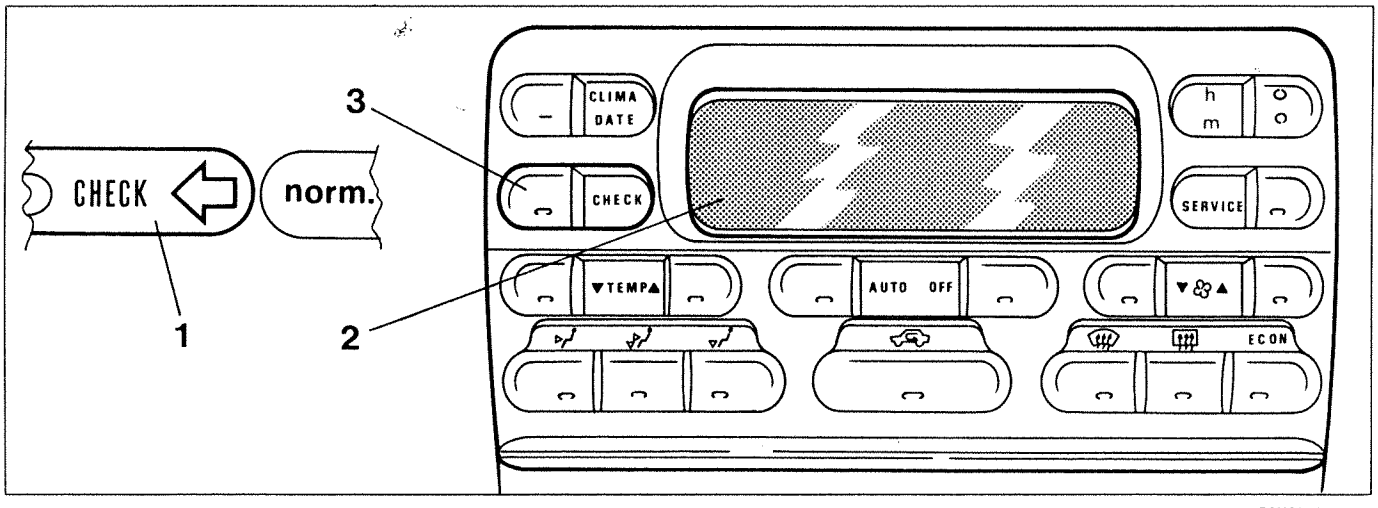

P3U29DB01

For each fault the control module memorizes:
- the component which has given rise to the fault (e.g. pressure control solenoid);
- classification of the fault (Present or Intermittent);
- type of fault (A.C./D.C. GND/D.C. Vbatt/etc.).

Display of error messages
The following error messages concerning the automatic transmissionare displayed on the Infocenter:
- MAX TEMPERATURE OF AUTO TRANSMISSION OIL;
- AUTO TRANSMISSION CONTROL UNIT FAULT.

Press the CHECK key (3) to recall the memorized faults in sequence for a period of 5 seconds on the Infocenter display (2).
If there are no memorized faults, the message "CHECK OK" will be displayed for about 1 second.
While displaying the error message, the system sets the appropriate recovery function so that the nearest Authorized Workshop can be reached.

Fault deletion
The errors memorized by the control module can be deleted by active diagnosis with the FIAT/LANCIA Tester or by disconnecting the battery for over 10 seconds.

Recovery functions

If the control module detects a fault, the red CHECK warning light on the instrument panel comes on to warn the driver, and at the same time the appropriate recovery function is activated so that the nearest Authorized Workshop can be reached.

Main components
If the control module has memorized one of the following faults:
- faults in gear change solenoids S1 or S2;
- fault in pressure control solenoid STH;
- fault in selector lever position sensor;
- fault in throttle position sensor;
- fault in gearbox main shaft rpm sensor;
- fault in vehicle speed sensor;
- fault in transmission ratio;
- fault in torque reduction signal transmission check;
- fault in battery voltage;
- fault in gear change mechanism;

the recovery function disables all the solenoids so no automatic gear changes are effected, nor does the torque converter lock nor is there hydraulic pressure variation.
The vehicle can be driven because each position of the selector lever corresponds to the engagement of a particular transmission ratio, by moving the hydraulic distributor.

Selector lever position	R	D	3	2	1
Gear engaged	Reverse	4th	4th	3rd	1st

Lock-up control solenoid
In the case of a fault, the torque converter lock-up function is disabled.

Coolant temperature sensor
In the case of a fault, a replacement value of 75°C is assigned.

Kick-down switch
In the case of a fault, it is considered ON if the throttle valve aperture is over 73.5%, OFF if it is below 70%.

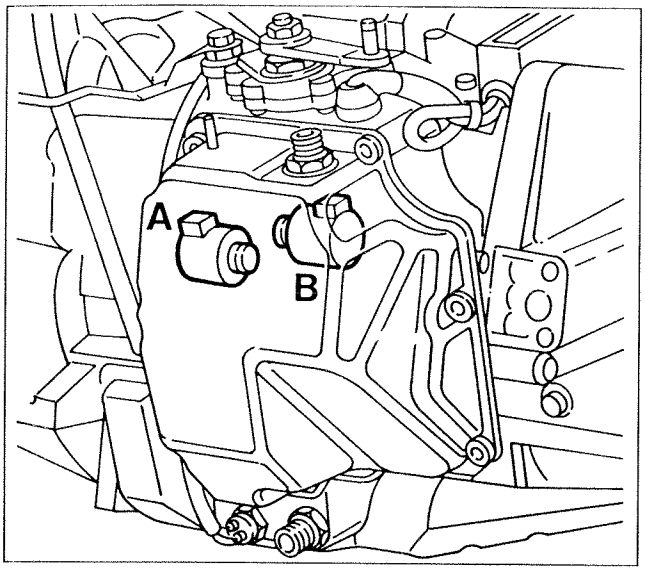

P3U31DB01

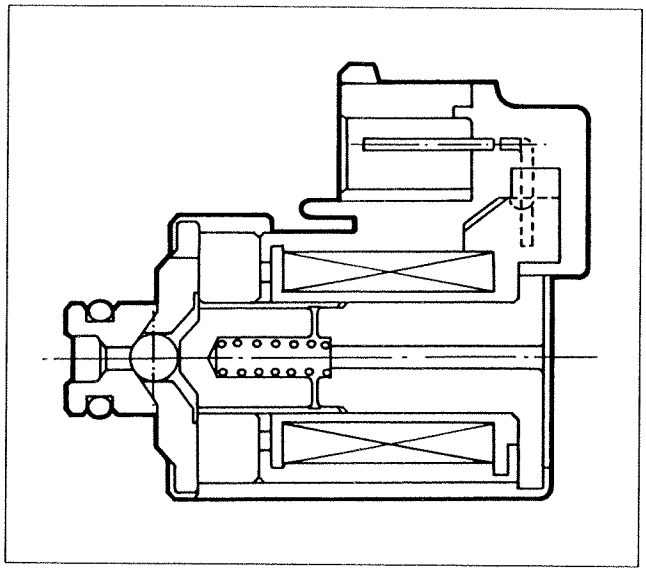

P3U31DB02

GEAR CHANGE SOLENOIDS

The gear change solenoids S1 and S2 are located at the front of the gearbox, and they manage the gear changes. The solenoids are normally closed (N.C.) electrovalves which, when they receive a signal from the control module, change their position to engage the different transmission ratios, in accordance with the following table.

A. Solenoid S1
B. Solenoid S2

Gear	Solenoid S1	Solenoid S2
1st	OFF	ON
2nd	ON	ON
3rd	ON	OFF
4th	OFF	OFF

The resistance of the gear change solenoids S1 and S2 can be measured by disconnecting the connector and connecting an ohmmeter as shown in the figure.

Resistance: 13 ± 2 ohm at 20°C

Wiring connector

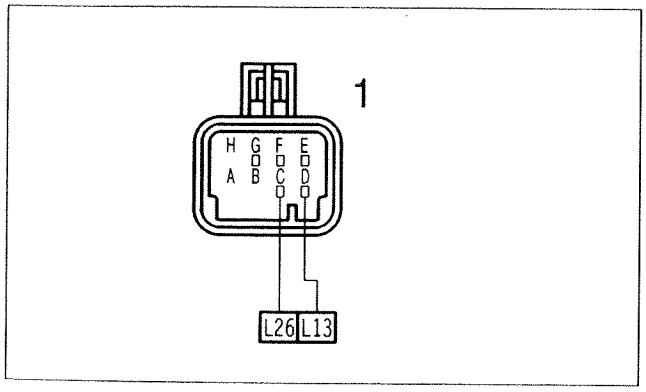

P3U31DB03

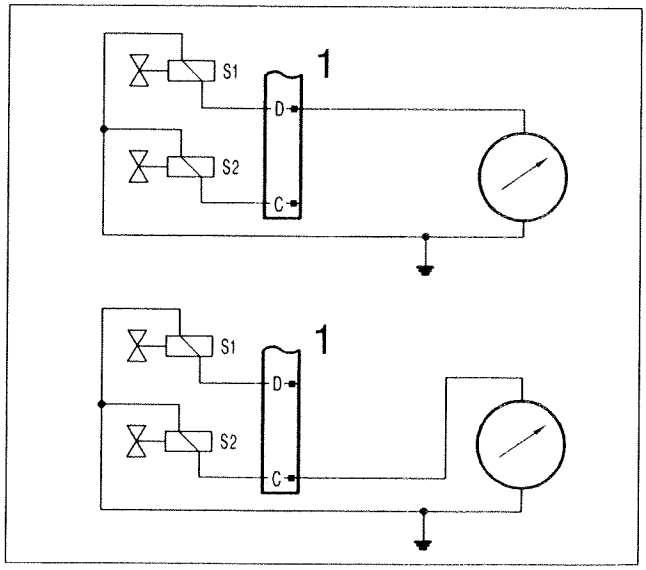

P3U31DB04

Copyright Fiat Auto

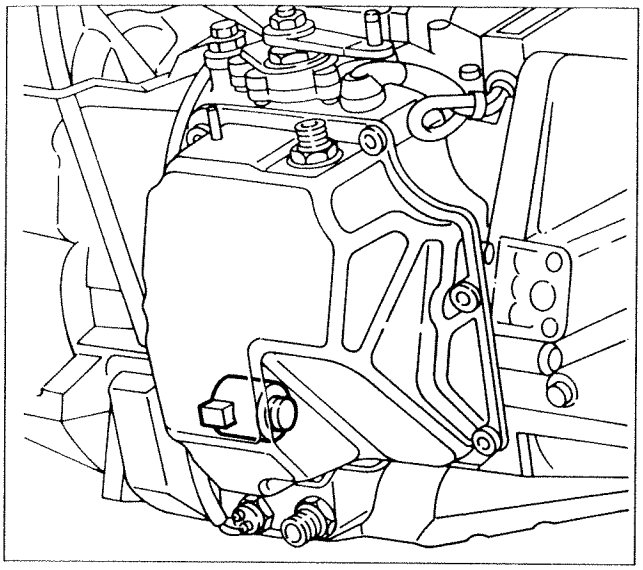

P3U32DB01

LOCK-UP CLUTCH CONTROL SOLENOID

The lock-up clutch control solenoid SL is located at the front of the gearbox and manages the locking of the torque converter.

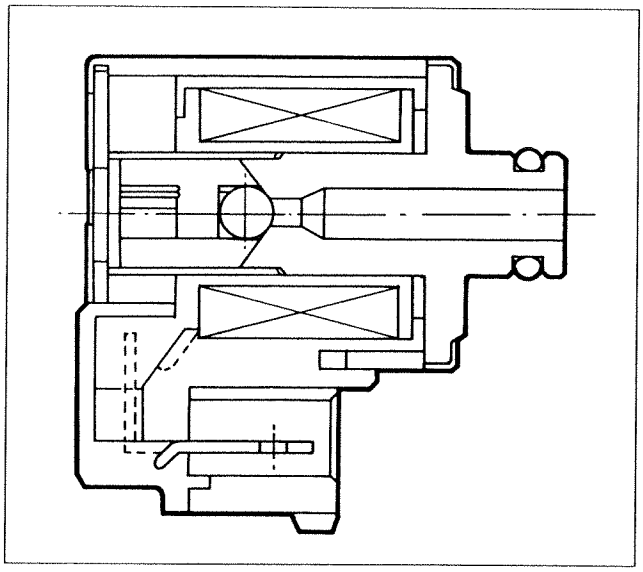

P3U32DB02

Controlled by a duty-cycle signal sent from the control module, the solenoid intercepts the passage of oil, discharging the pressure acting on the rear side of the clutch.
The clutch is fitted on the turbine hub; it is pushed by the pressure inside the converter, which acts on the front side, against the guard connected to the converter pump, so locking it.

The resistance of the lock-up clutch control solenoid SL can be measured by disconnecting the connector and connecting an ohmmeter as shown in the figure.

Resistance: 13 ± 2 ohm at 20°C

Wiring connector

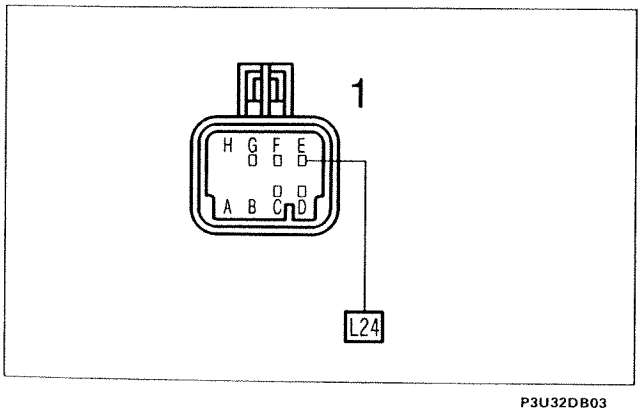

P3U32DB03

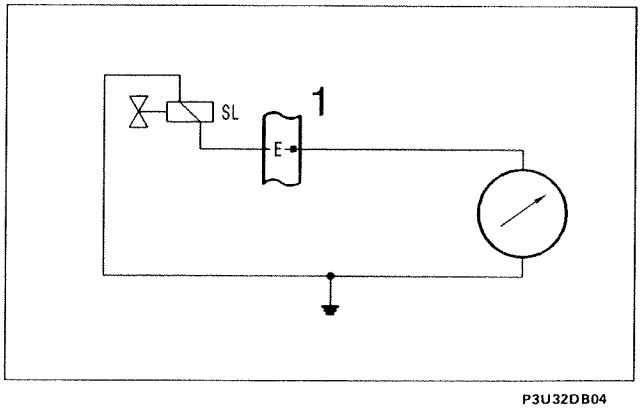

P3U32DB04

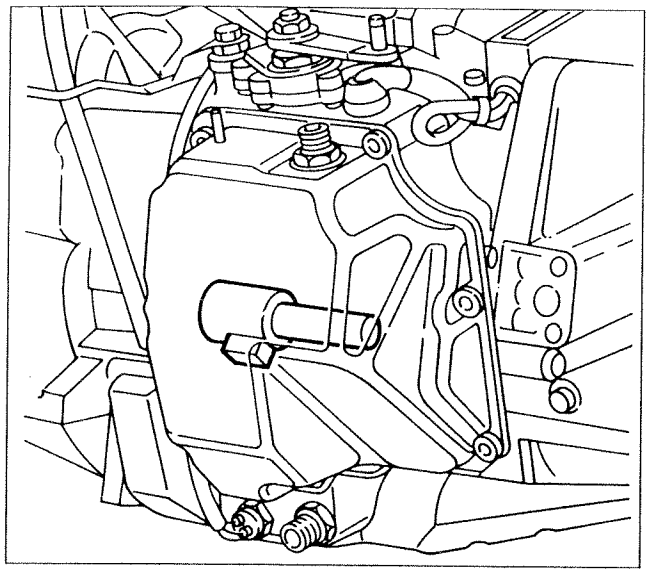

P3U33DB01

PRESSURE CONTROL SOLENOID

The line pressure control solenoid STH is located at the front of the gearbox, and it manages the variation of hydraulic pressures.
The solenoid, also controlled by a duty-cycle signal sent from the control module, regulates the hydraulic pressure acting on the brakes and clutches in order to reduce gear engagement times under cold conditions and jolting caused by the engagement of reverse gear.
The solenoid also regulates the hydraulic valve drive pressure in accordance with the aperture of the throttle valve and vehicle speed.

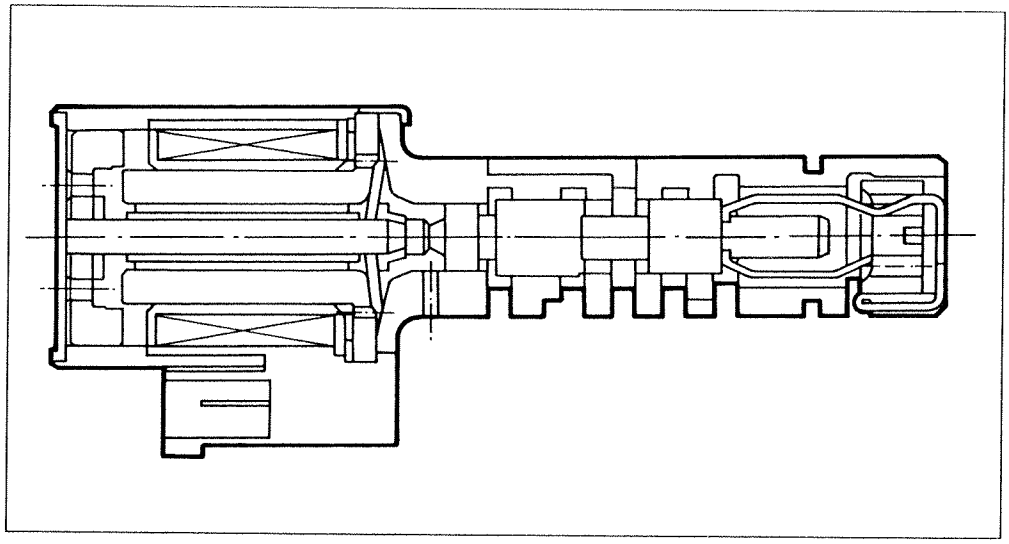

P3U33DB02

The resistance of the line pressure control solenoid STH can be measured by disconnecting the connector and connecting an ohmmeter as shown in the figure.

Wiring connector

Resistance: 3.5 ± 0.2 ohm at 25°C

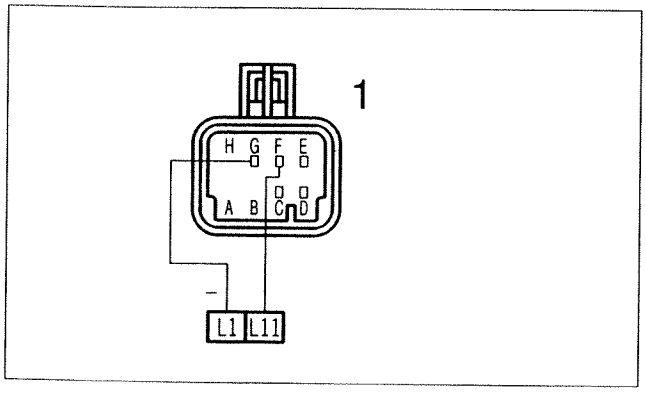

P3U33DB03

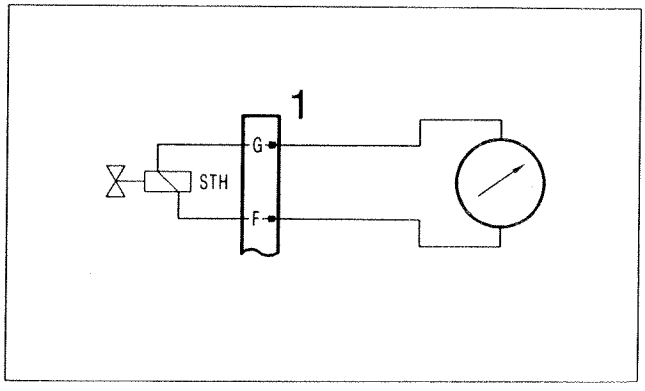

P3U33DB04

Copyright Fiat Auto

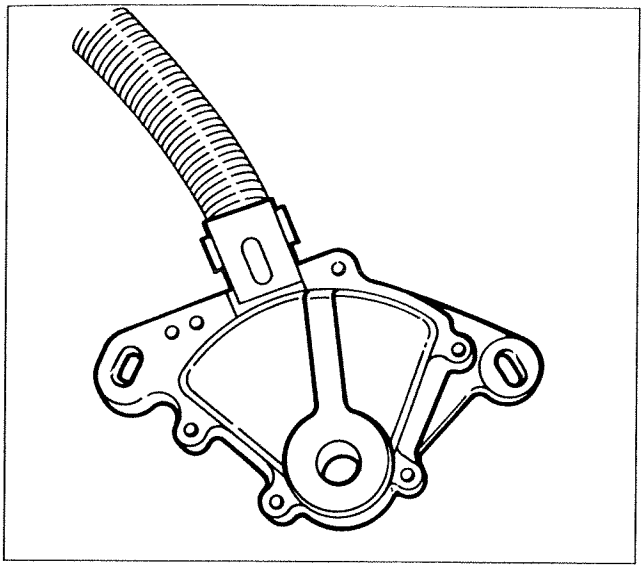

P3U34DB01

SELECTOR LEVER POSITION SENSOR

The sensor, located at the top of the gearbox casing, detects the position of the selector lever (to which it is connected mechanically) and informs the control module by means of an appropriate electrical signal.
The module switches on the relevant warning light on the instrument panel.

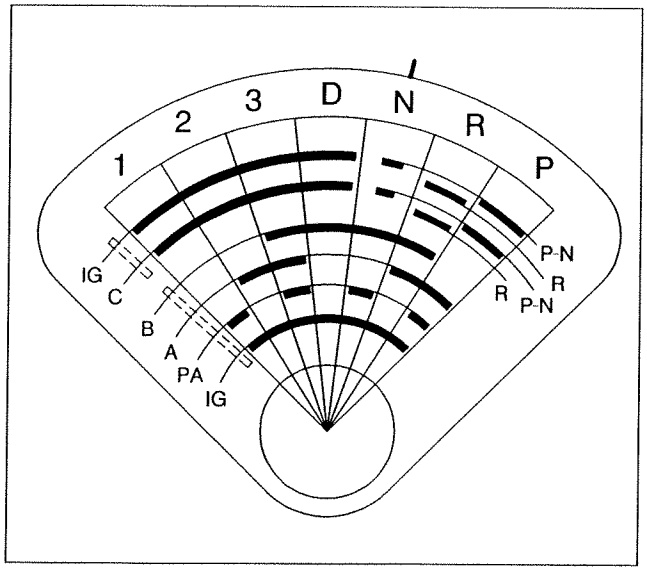

P3U34DB02

The sensor also switches on the reversing lights when reverse gear is engaged, and enables the starter motor only when the selector lever is at the N or P position.

The combination of output signals present on the sensor's various terminals is shown in the table below.

Wiring connector

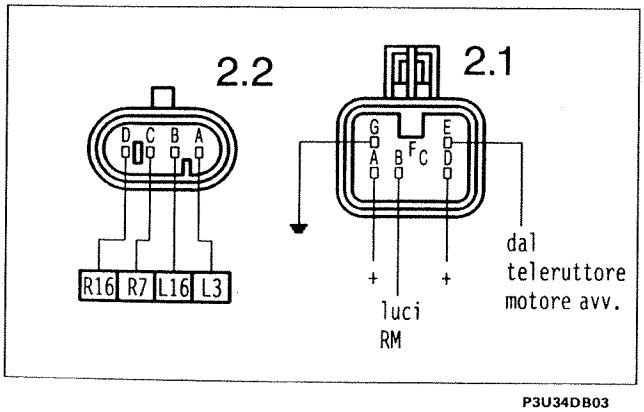

P3U34DB03

Connectors	2.1					2.2			
Terminals	A	B	E	G	D	A	B	C	D
Signals	R	R	P/N	P/N	IG	A	B	C	PA
P			•	•	•	•			•
R	•	•			•	•	•		
N			•	•	•		•		•
D					•		•	•	
3					•	•	•	•	•
2					•	•		•	
1					•			•	•

P3U34DB04

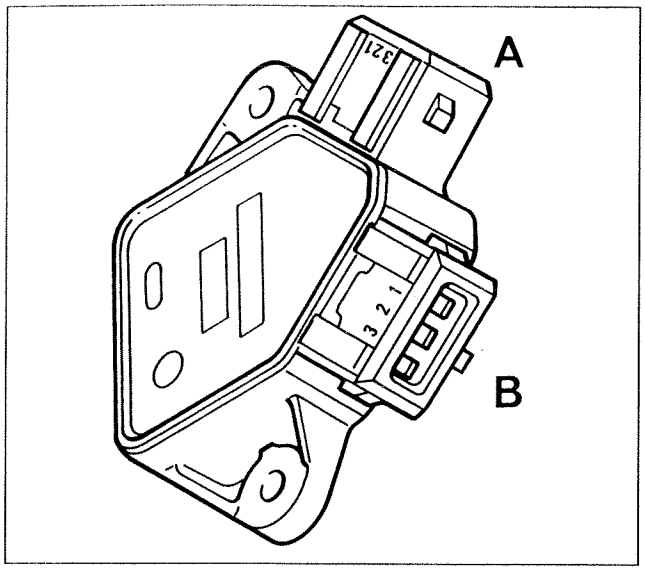

P3U35DB01

THROTTLE POSITION SENSOR

The sensor consists of two potentiometers, each of which has its own connector, and a shared moving part, controlled directly by the throttle valve spindle.

Wiring diagram of throttle position sensor

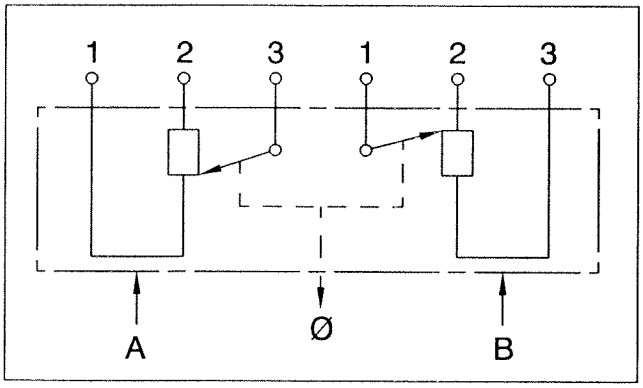

P3U35DB02

The potentiometer A is connected to the fuel injection-ignition control unit as on models with manual gearbox.
The potentiometer B is connected to the automatic transmission's control module, which supplies it with a voltage of 5V applied to terminals 2 and 3, and it receives from terminal 1 an analogue voltage signal which is directly proportional to the angle of aperture of the throttle valve.

Wiring connector

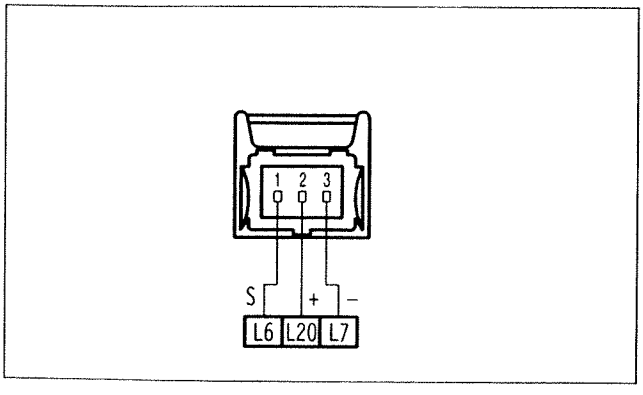

P3U35DB03

Copyright Fiat Auto

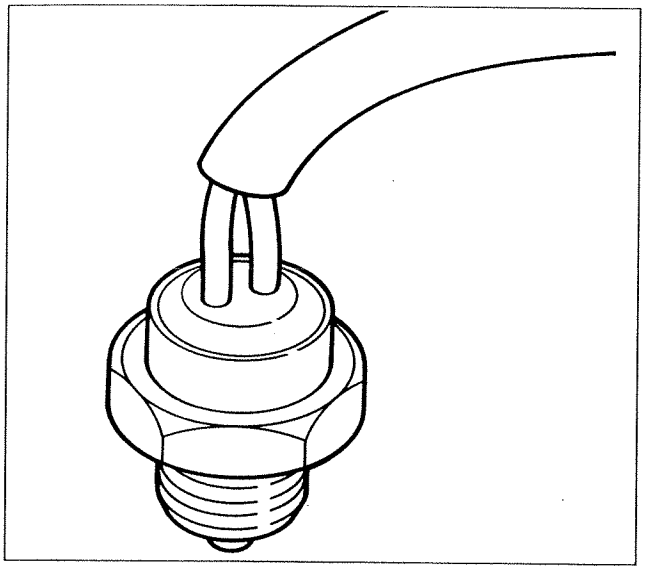

P3U36DB01

GEARBOX OIL TEMPERATURE SENSOR

The sensor is located in the gearbox casing, and it detects the transmission oil temperature by the variation in resistance induced on the sensitive part of the sensor.
The information suppled to the control module is used to increase the line pressure under cold conditions, in order to reduce the gear change times.

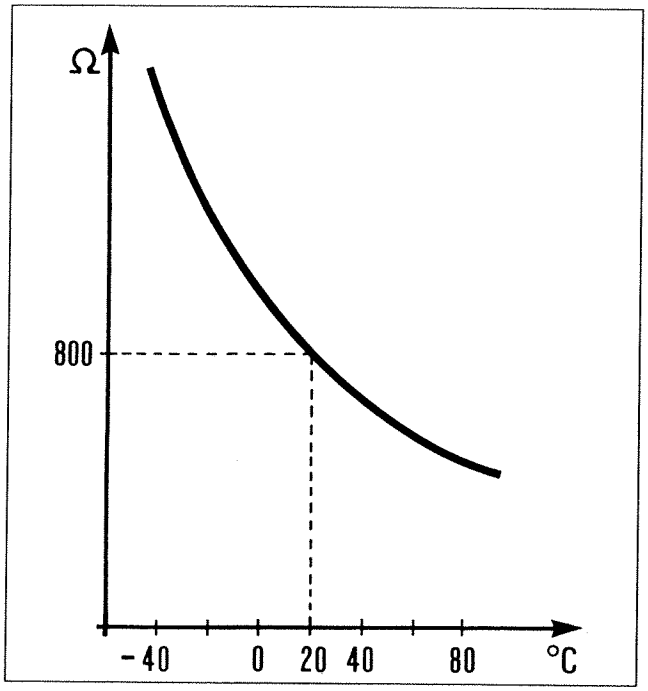

P3U36DB02

The resistance of the gearbox oil temperature sensor can be measured by disconnecting the connector and connecting an ohmmeter as shown in the figure.

Resistance: 800 ± 200 ohm at 20°C

Wiring connector

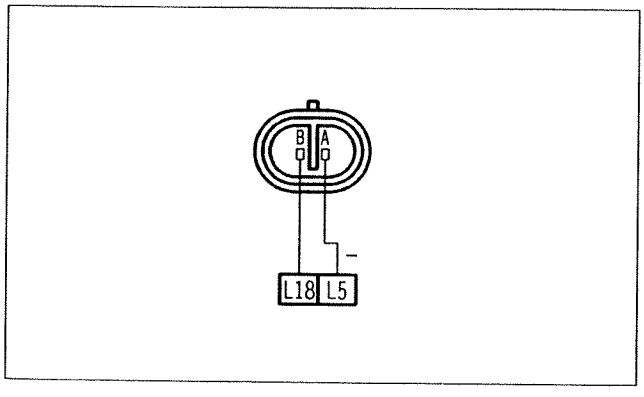

P3U36DB03

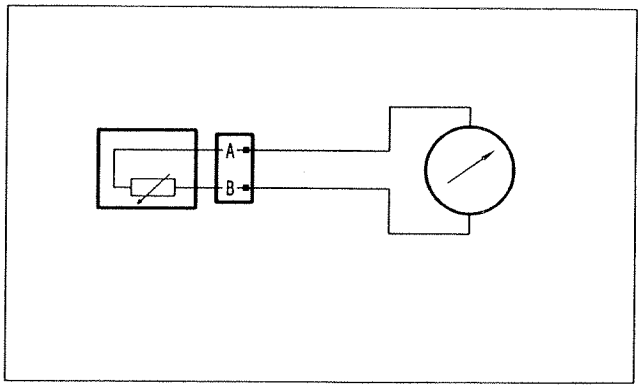

P3U36DB04

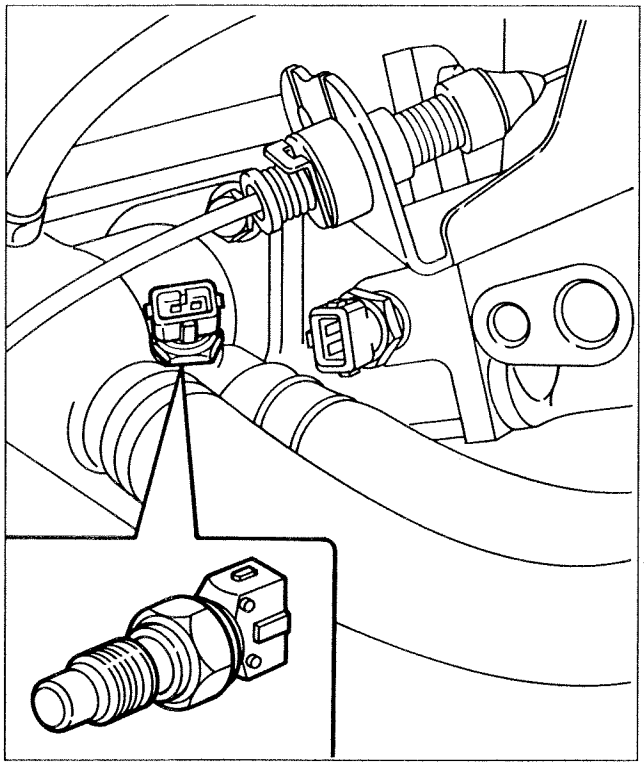

P3U37DB01

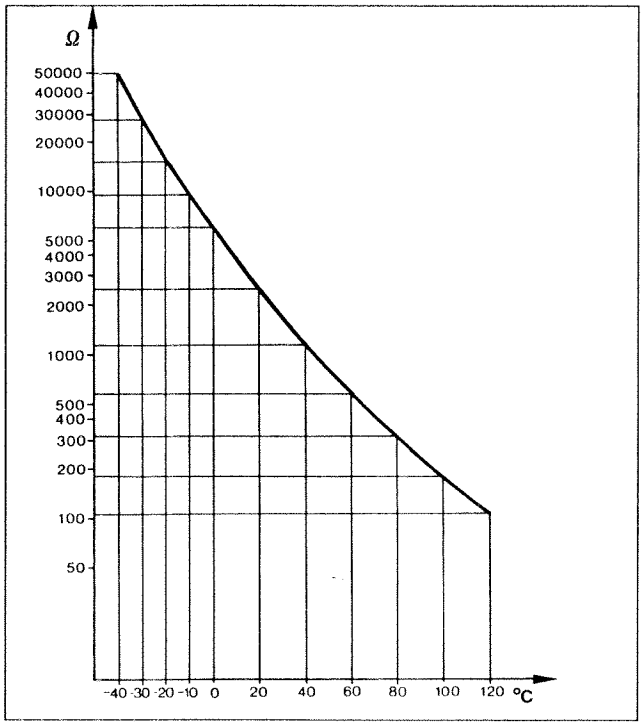

P3U37DB02

COOLANT TEMPERATURE SENSOR

The NTC sensor is located on the engine thermostat casing, and it detects the coolant temperature by means of the variation in resistance induced on the sensitive part of the sensor. At temperatures of below 75°C, the torque converter lock function is inhibited and the change from 3rd to 4th gear is prevented.

Wiring connector

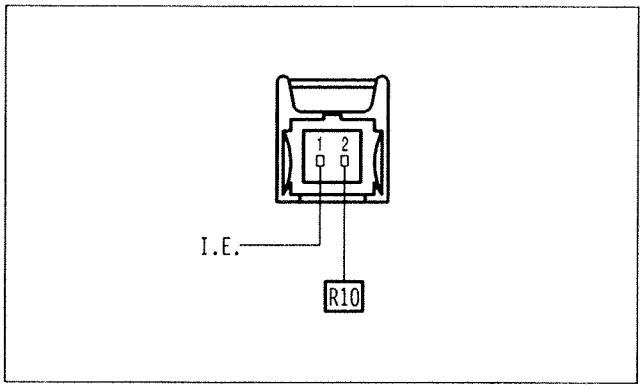

P3U37DB03

The resistance of the coolant temperature sensor is measured by disconnecting the connector and connecting an ohmmeter as shown in the figure.

Resistance: 2490 ± 210 ohm at 20°C

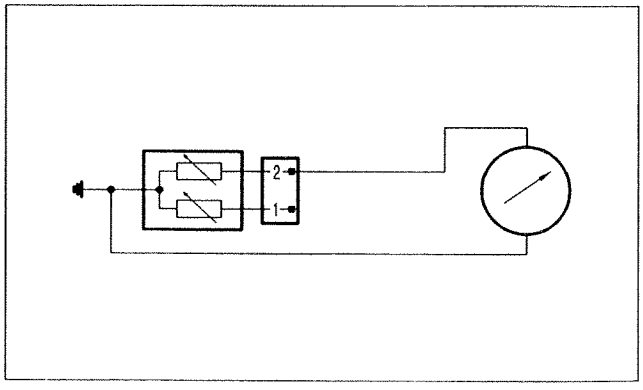

P3U37DB04

Connect the ohmmeter between terminal 2 and the engine earth, and not between the two terminals which could give rise to an incorrect reading.

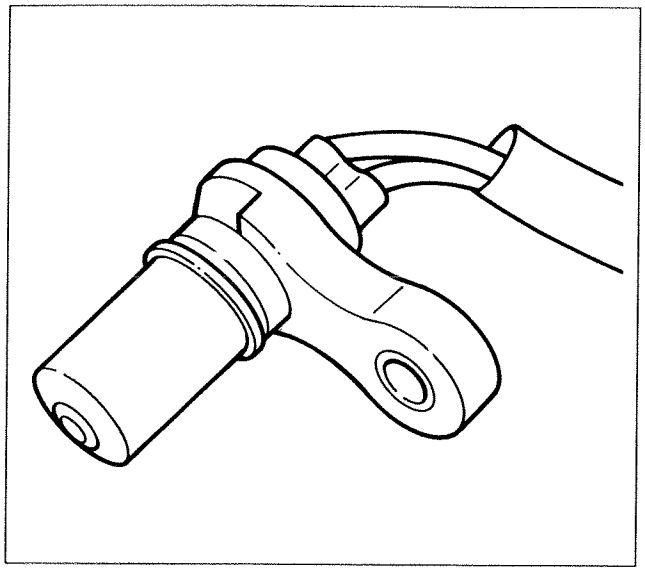

P3U38DB01

Wiring connectors

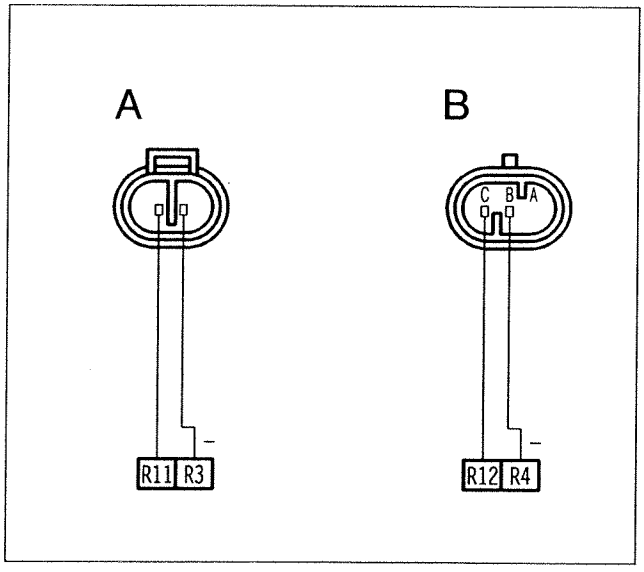

P3U38DB02

A. Main shaft rpm sensor
B. Vehicle speed sensor

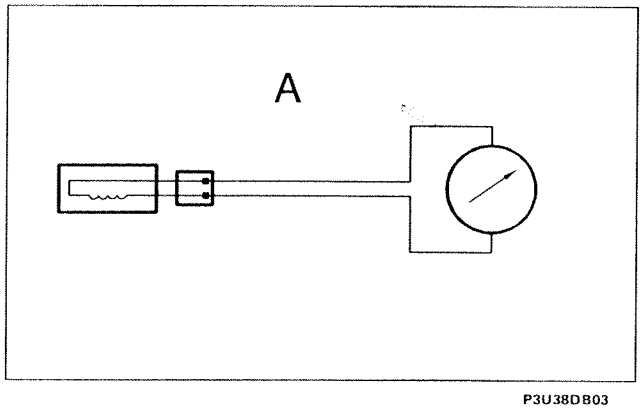

P3U38DB03

MAIN SHAFT RPM SENSOR

VEHICLE SPEED SENSOR

The two magnetic induction sensors located on the gearbox casing allow the control module to check the correct operation of the gearbox with regard to transmission ratios and gear change times, and to diagnose whether the sensors themselves are working.

The main shaft rpm sensor (A) measures the speed of rotation of the gearbox main shaft, connected to the torque converter's turbine, by means of a 12-tooth phonic wheel on the outer surface of the cylinder of the clutch C1.
The sensor sends a pulse signal to the control module (12 pulses for each shaft rotation) proportional to the gearbox input speed of rotation.

The vehicle speed sensor (B) measures the speed of rotation of the gearbox layshaft, connected to the differential pinion, by means of an 18-tooth phonic wheel constituted by the parking lock gear.
The sensor sends the control module a pulse signal (18 pulses for every shaft rotation) proportional to the gearbox output speed of rotation, i.e. the vehicle speed.
This signal is used to effect gear changes.

The resistance of the main shaft and layshaft sensors can be measured by disconnecting the connectors and connecting an ohmmeter as shown in the figure.

Resistance: 425 ± 40 ohm at 20°C

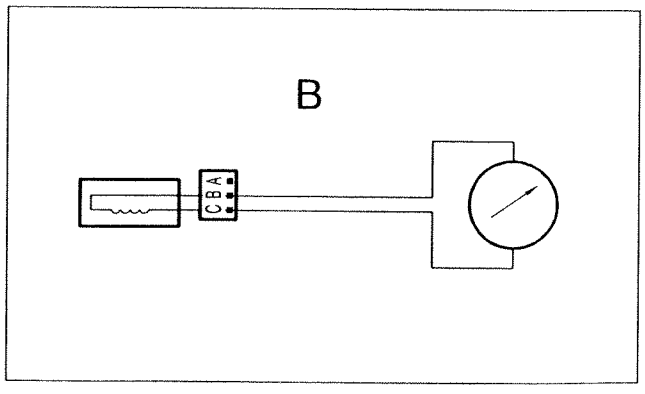

P3U38DB04

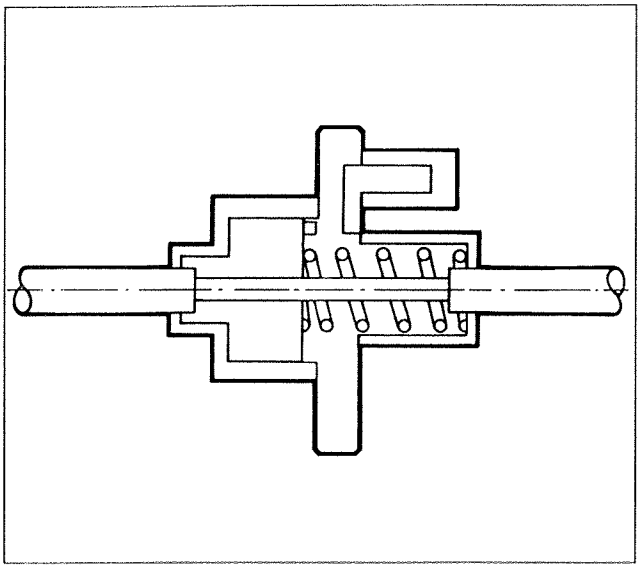

P3U39DB01

KICK-DOWN SWITCH

The kick-down switch is installed on the accelerator cable sheath, and it is operated when the accelerator pedal is pressed beyond the point of maximum aperture of the throttle valve.

When the switch is activated, the control module graduates the transmission ratio in relation to the vehicle speed, complying with the selected gear change program.

With the switch at the ON position, the control module effects gear changes at higher rpm speeds.

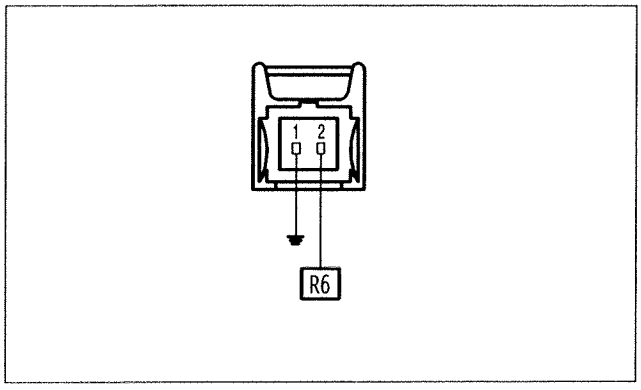

P3U39DB02

Wiring connector

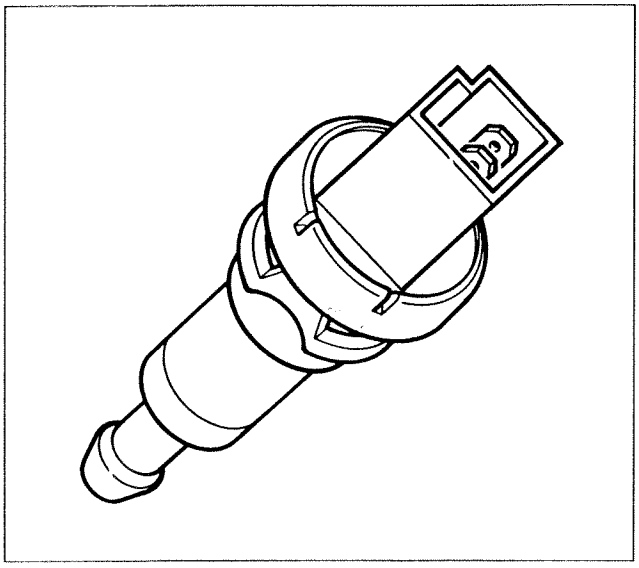

P3U39DB03

STOP LIGHTS SWITCH

The switch, which is mounted on the courtesy light, closes when the brake pedal is pressed, causing the STOP lights to come on and supplying terminal L9 of the control module to exclude the torque converter lock function (lock-up) when the brake pedal is pressed.

Copyright Fiat Auto

21-27.

WIRING DIAGRAM

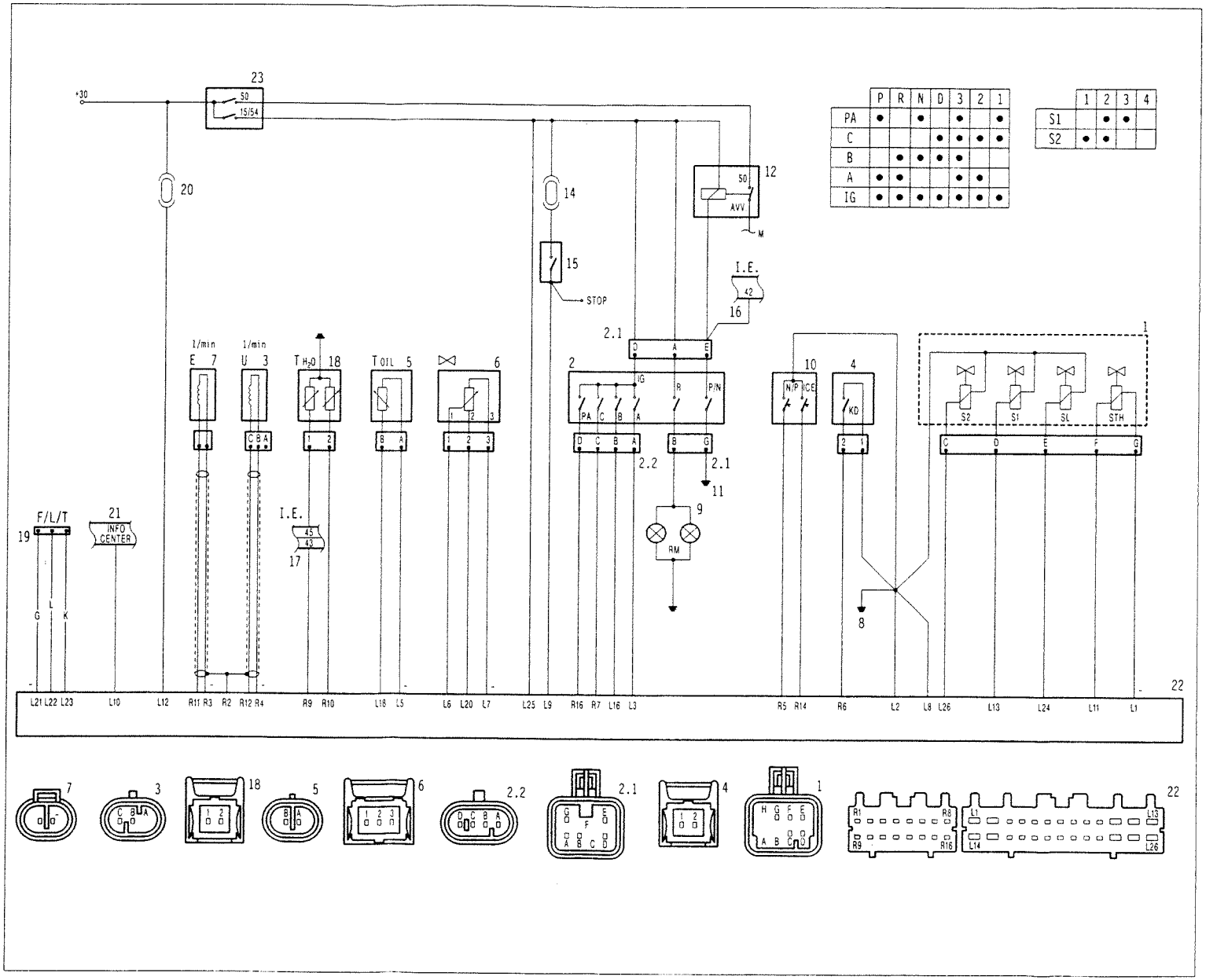

P3U40D801

Key

1. Solenoid assembly on automatic transmission
2. Selector lever position sensor
3. Vehicle speed sensor
4. Kick-down switch
5. Gearbox oil temperature sensor
6. Throttle position sensor
7. Main shaft rpm sensor
8. Earth on vehicle
9. Reversing lights
10. NORMAL/POWER and ICE driving mode switches
11. Earth on vehicle
12. Starter motor relay
14. 10A fuse protecting STOP lights
15. STOP lights switch
16. Fuel injection/ignition electronic control unit (P/N position signal)
17. Fuel injection/ignition electronic control unit (torque reduction command)
18. Coolant temperature sensor
19. Diagnostic socket for Fiat/Lancia tester
20. Fuse protecting control module
21. Display on instrument panel (for displaying selector lever position, selected driving mode and fault indication)
22. Control module
23. Ignition switch

Copyright Fiat Auto

FAULT DIAGNOSIS

Operating problems of the AISIN electronically-controlled automatic transmission may be caused by the engine, the control system or the automatic transmission itself.

The fault-finding procedure starts with very simple operations, initially aimed at establishing whether the fault is caused by the engine, the control system or the gearbox.

Electrical faults are revealed by the control unit's self-test function, by the red CHECK warning light on the instrument panel coming and and error messages being displayed by the Infocenter.

Preliminary tests

Checking oil level

NOTE *The gearbox oil level can be checked with the engine and gearbox at normal operating temperature (gearbox oil temperature: 70 - 80°C), so the vehicle should be driven for an appropriate length of time before the check.*

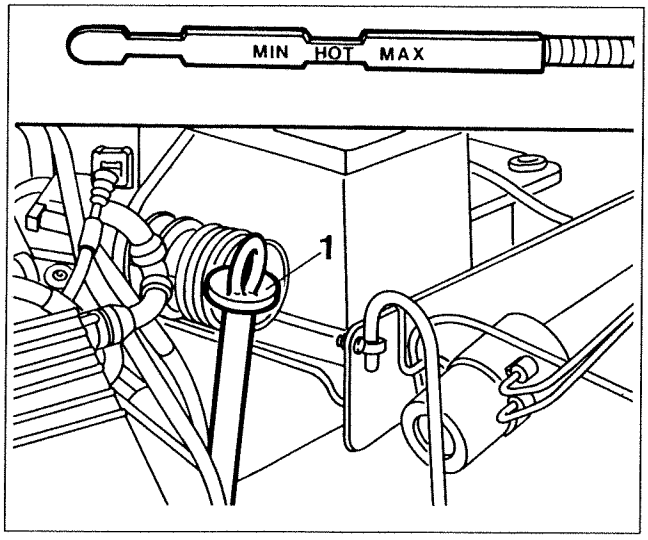

P3U42DB01

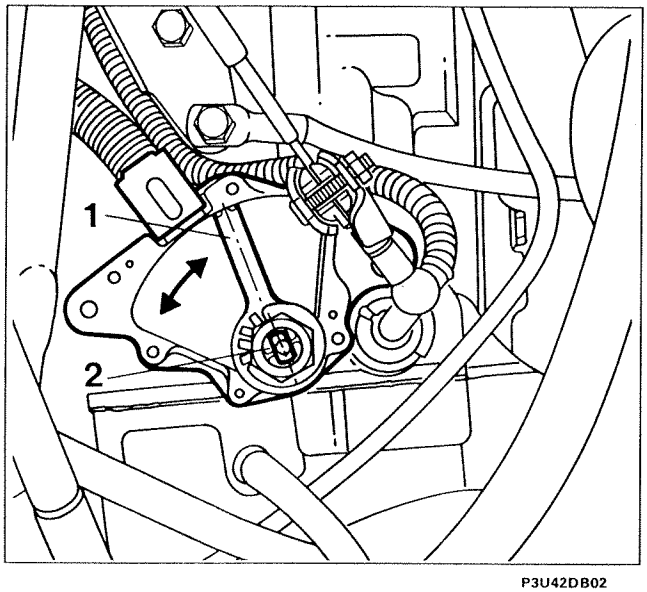

P3U42DB02

Check the gearbox oil level as follows:

- park the vehicle on flat ground and apply the handbrake;
- with the engine idling, gently move the selector lever from the P position to position 1, then return it to P;
- withdraw the oil level dipstick (1) and clean it;
- insert the dipstick fully into its seating;
- remove the dipstick agaiin and check that the oil level is between the MIN and MAX marks on the side of the dipstick marked HOT.

If the oil level is low, identify and eliminate the leaks, then top up the level.
Also check the condition of the oil; if it smells burnt or is black, replace it.

Checking selector lever position

Move the selector lever from the N position to the other positions, and check that the lever moves smoothly without tight spots in any position and that the position indicator on the instrument panel indicates the correct position.

Checking starting switch

If the engine does not start when the selector lever is at the N or P position, or vice versa if it starts when the lever is not at the N or P position, the selector lever position sensor should be adjusted as follows:

- move the selector lever to the N position;
- slacken the sensor attachment nuts;
- rotate the sensor so that the projection on the top surface (1) lines up with the machined sides of the pin (2), then lock the sensor in this position by tightening the two side bolts.

Checking idle speed
Check that the idle speed is correct.

Tests with FIAT/LANCIA Tester

A guided fault diagnosis relating to the electrical side can be conducted by connecting the FIAT/LANCIA Tester with M39-A memory to the control module's diagnostic socket.
The complete fault diagnosis of the system consists of three stages:
1. display of a set of operating parameters (engine running);
2. display of faults and elimination of their causes (guided diagnosis);
3. activation of the actuators (active diagnosis).

1. Display of operating parameters
The following operating parameters are displayed:
- selector lever position;
- gear engaged;
- vehicle speed;
- angle of aperture of throttle valve;
- pressure control solenoid STH;
- kick-down switch,
- brake pedal contact;
- engine coolant temperature;
- gearbox oil temperature;
- gearbox main shaft rpm;
- torque reduction function;
- battery voltage.

2. Display of faults and elimination of their causes (guided diagnosis)
At the start of diagnosis, the F/L Tester reads the faults memorized by the control module.
When a fault is detected, the F/L Tester emits an acoustic signal and displays the relevant error message.
A list of possible causes of the fault is then displayed.

After all the necessary repairs or replacements have been carried out and all the faults have been eliminated, the faults will be automatically deleted by the F/L Tester.
Guided diagnosis can also be carried out by checking step by step the efficiency of the circuits and the various sensors/switches.

Once the faults have been eliminated, a road test should be carried out for at least 10 minutes with the engine and gearbox up to temperature, in order to then check with the F/L Tester that there are no faults in the system.

3. Activation of actuators (active diagnosis)
The following actuators can be activated, with the engine off and selector lever in the N position, by means of a command issued by the F/L Tester:
- gear change solenoids S1 and S2;
- lock-up clutch control solenoid SL;
- line pressure control solenoid STH.

This test is useful for checking the operation of the actuators, since the clicking noise caused by the internal movement of the solenoids can be heard.

The faults memorized by the control module can also be deleted in active diagnosis (provided they are no longer present and their conditions are not recreated).

NOTE *The faults can also be deleted by disconnecting the battery for over 10 seconds.*

Copyright Fiat Auto

Stall speed test

This test serves to check the performance of the transmission and engine, and it is carried out by measuring the maximum rpm that can be reached by the engine with the selector lever at the D and R positions.

The duration of the stall speed test must not exceed 5 seconds.

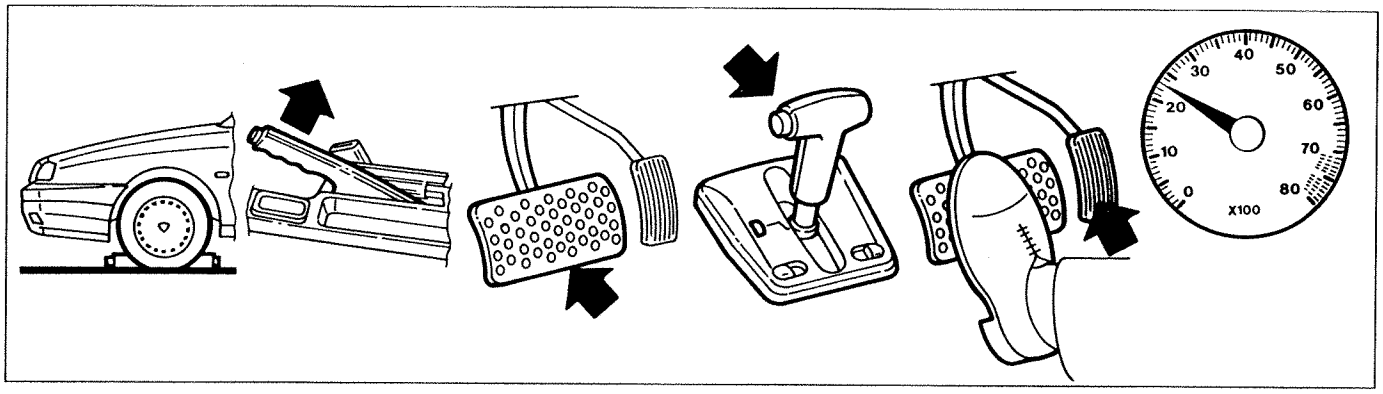

P3U44DB01

The stall speed is measured as follows:
- chock by vehicle by wedging the wheels;
- apply the handbrake fully;
- start the engine and bring it up to temperature;
- push the brake pedal strongly with the left foot;
- move the selector lever to the D position;
- press the accelerator pedal fully with the right foot and quickly read the maximum rpm reached by the engine.

Stall speed: 2300 ± 100 rpm

Repeat the sequence of operations, moving the selector lever to the R position.

Stall speed: 2300 ± 100 rpm

Stall speed	Possible causes
Lower than specified value in both D and R	* Insufficient engine power * Incorrect operation of free wheel on stator of torque converter
Higher than specified value in D	* Insufficient line pressure * Clutch C1 slipping * Incorrect operation of free wheel F3
Higher than specified value in R	* Insufficient line pressure * Clutch C2 slipping * Brake B3 slipping * Brake B4 slipping
Higher than specified value in both D and R	* Insufficient line pressure * Brake B4 slipping

Gear engagement time test

This test is for checking the condition of the clutches C1 and C2 and the brake B3, and it is carried out by measuring the time taken to engage first gear or reverse gear.

To obtain a reliable result, several measurements should be taken and the average value calculated. Allow one minute to pass between two consecutive measurements.

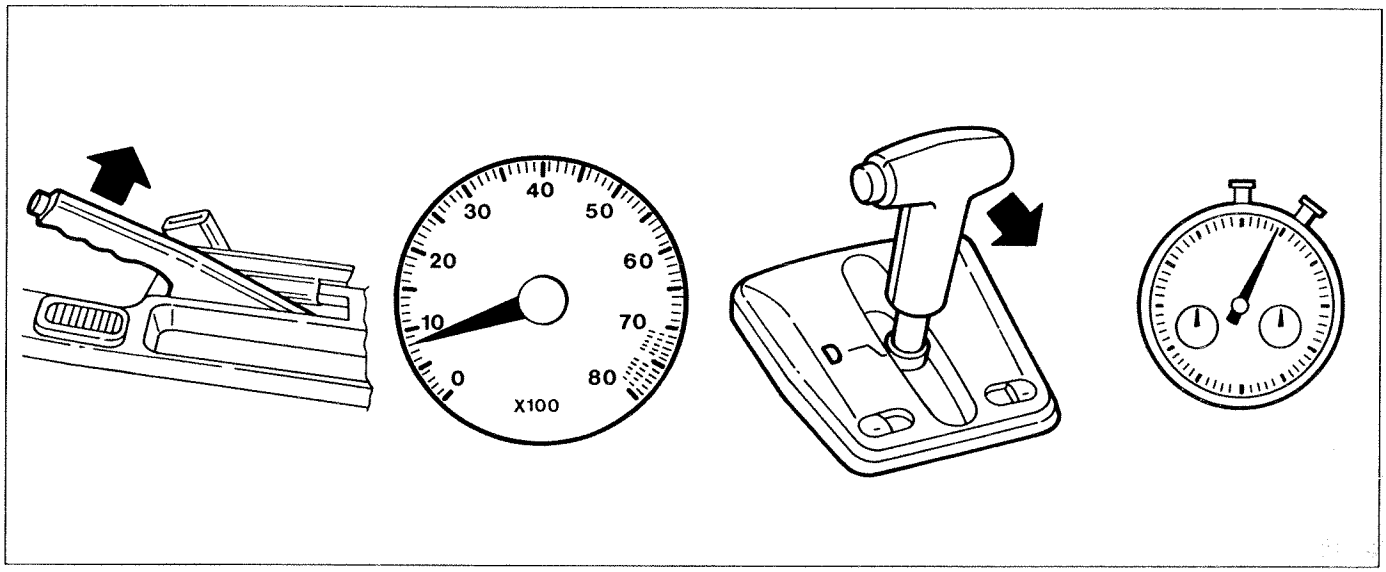

P3U45DB01

Measure the gear engagement time by carrying out the following operations:
- apply the handbrake fully;
- start the engine, bring it up to temperature and check that the idle speed is correct;
- move the selector lever from the N position to the D position;
- using a chronometer, measure the time which elapses between the movement of the selector lever and perception of engagement of 1st gear.

N-D engagement time: less than 0.7 s

Repeat the sequence of operations, moving the lever from the N position to R.

N-R engagement time: less than 1.2 s

Engagement time	Possible causes
Greater than specified value from N to D	* Insufficient line pressure * Clutch C1 slipping * Incorrect operation of free wheel F2
Greater than specified value from N to R	* Insufficient line pressure * Clutch C2 slipping * Brake B3 slipping * Brake B4 slipping

Copyright Fiat Auto

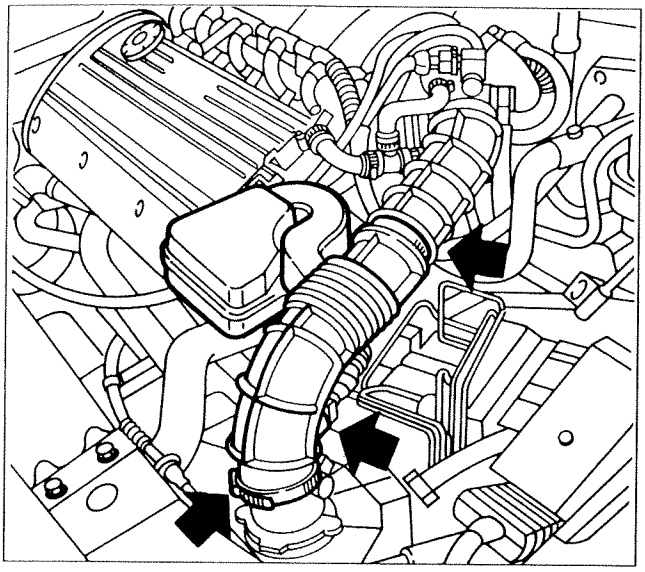

P3U46DB01

Hydraulic test

Measure the line pressure as follows:

- disconnect the wiring connector from the intake air temperature sensor, undo the clips securing the air intake pipe to the flow meter and the union on the throttle body;
- undo the mounting bracket bolt and remove the air intake pipe complete with resonator;

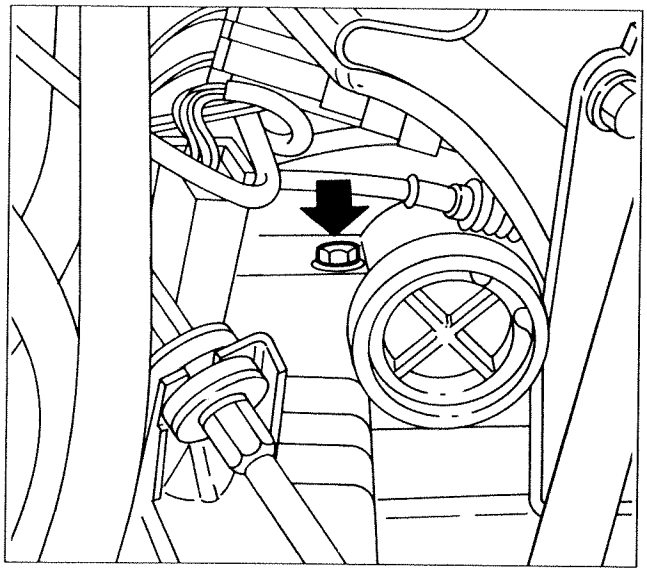

P3U46DB02

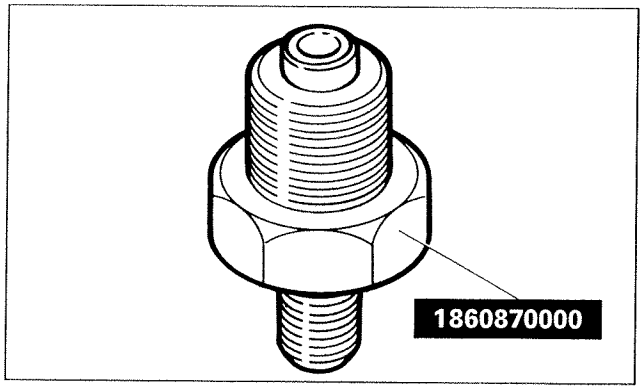

P3U46DB03

- remove the plug-screw on the gearbox casing and screw in its place the union 1860870000;

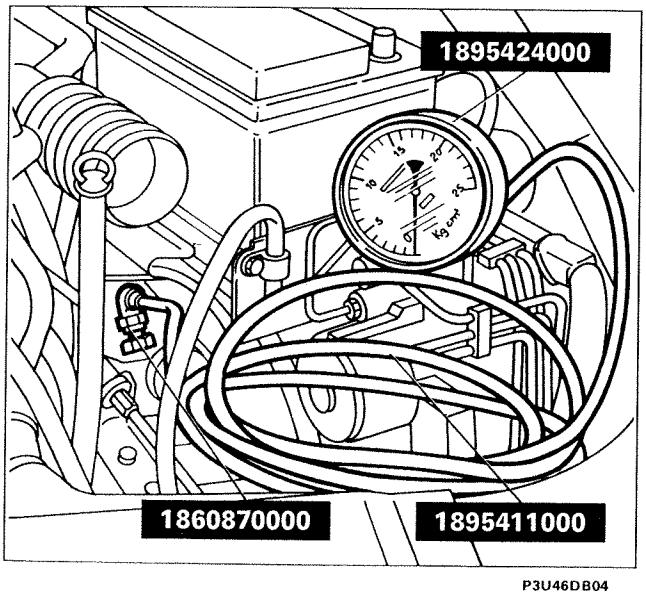

P3U46DB04

- connect the pressure gauge 1895424000 by means of the pipe 1895411000 to the union 1860870000, and position so that it is visible from the driver's seat;
- refit the air intake pipe complete with resonator;
- tighten the attachment clips and connect the wiring connector on the intake air temperature sensor;

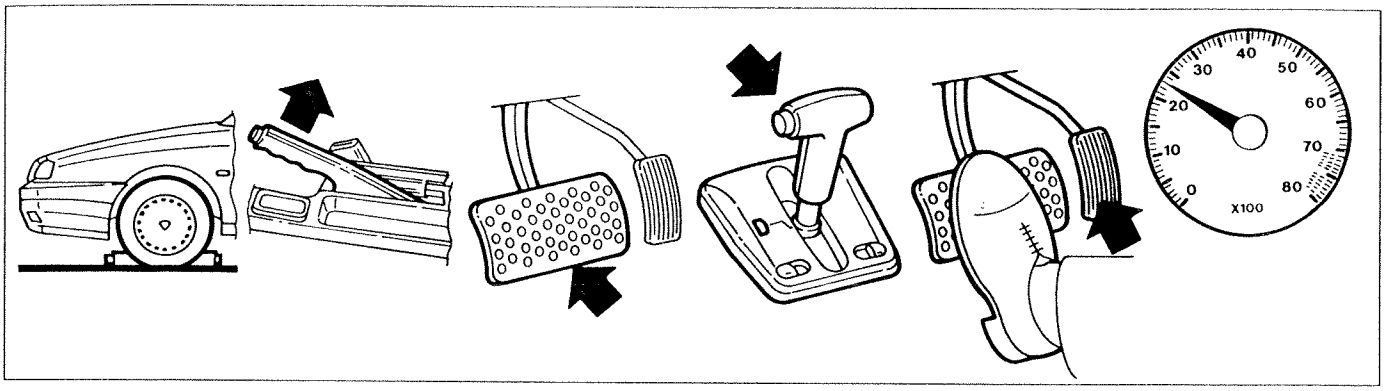

P3U44DB01

- chock the vehicle by wedging the wheels;
- apply the handbrake fully;
- press the brake pedal strongly with the left foot;
- start the engine, bring it up to temperature and check that the idling speed is correct;
- move the selector lever to the D position;
- read the line pressure measurement at idle speed;
- fully press the accelerator pedal with the right foot and quickly read the line pressure at the engine idle speed.

The duration of the stall speed test must not exceed 5 seconds.

Repeat the last two operations with the selector lever in the R position.

Rpm	Position D (and 1-2-3)	Position R (and N-P)
Idle	3.4 - 4.0 bar 3.5 - 4.1 kg/cm³	5.9 - 6.9 bar 6.0 - 7.0 kg/cm³
Stall	10.4 - 13.3 bar 10.6 - 13.6 kg/cm³	16.0 - 20.1 bar 16.3 - 20.5 kg/cm³

Line pressure	Possible causes
Greater than specified value in both D and R	Fault in pressure control solenoid Adjustment valves faulty
Lower than specified value in D and R	Fault in pressure control solenoid Adjustment valves faulty Oil pump faulty Faulty seal on brake B4
Lower than specified value only in D	Leaks in hydraulic circuit in forward gears Faulty seal on clutch C1
Lower than specified value only in R	Leaks in hydraulic circuit in reverse and neutral Faulty seal on brake B4 Faulty seal on clutch C2

Copyright Fiat Auto

Road tests

These tests are for checking the correct operation of the automatic transmission under actual driving conditions.

Carry out the following tests with the gearbox oil at the normal operating temperature.

Test at position D with NORMAL or POWER driving mode
Move the selector lever to position D and carry out the following tests with the accelerator in two fixed positions, corresponding to 50% and 100% aperture of the throttle valve.

A) Changes to higher gears
Make sure that the gear changes 1-2, 2-3 and 3-4 take place at the points conforming to the gear change program (see graphs on pages 24 and 25).

B) Jolts and slipping
In the same way check that jolts and slipping caused by the gear changes 1-2, 2-3 and 3-4 are within normal limits.

C) Locking of lock-up clutch
Proceeding at a speed of around 85 km/h, gently press the accelerator pedal and check that the engine speed does not change suddenly.

D) Vibrations and noise
Check under normal driving conditions that there are no vibrations or abnormal noises.

E) Operation of kick-down
Proceeding in second, third and fourth gears, with the selector lever at position D, fully presss the accelerator pedal to close the kick-down switch and check that the limit speeds for the changes 2-1, 3-2 and 4-3 conform to the gear change program.

F) Engine braking
Proceeding in fourth gear, move the selector lever in sequence from position D to positions 3, 2 and 1 and perceive the engine braking effect at each of these gear changes.

Tests in position 3, 2 and 1 with NORMAL or POWER driving mode
The above tests are repeated for each position of the selector lever.

Test in position R
Move the lever to position R, fully press the accelerator pedal to start the vehicle, checking that slipping is normal.

Test in position P
Stop the vehicle on a downhill slope, and after moving the selector lever to position P, release the brake pedal. Check that the locking pawl prevents the vehicle from moving.

Test with manual operation of the gearbox

Disconnect the control module connectors. Road test the vehicle, making sure that whenever the selector lever is moved, the gear changes are effected in accordance with the following table.

Selector lever position	P	R	N	D	3	2	1
Gear engaged	Park	Reverse	Neutral	4th	4th	3rd	1st

NOTE *With the selector lever at position N, the vehicle should not move spontaneously on a level road. With the selector lever at position P, the locking pawl should prevent the vehicle from moving even on a downhill road.*

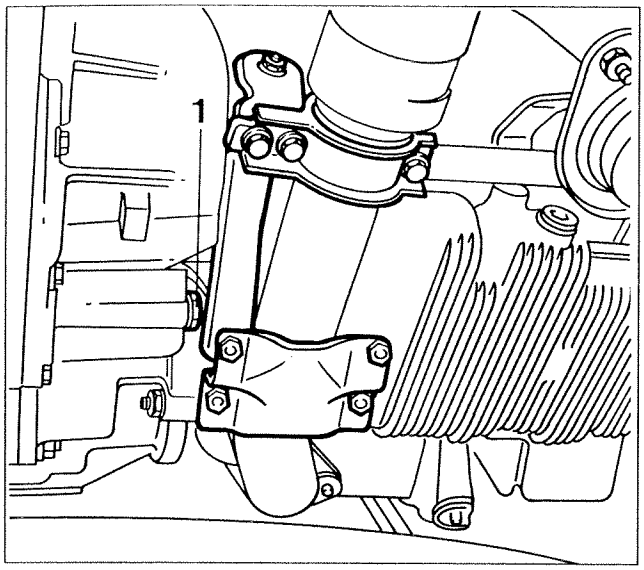

P3U49DB01

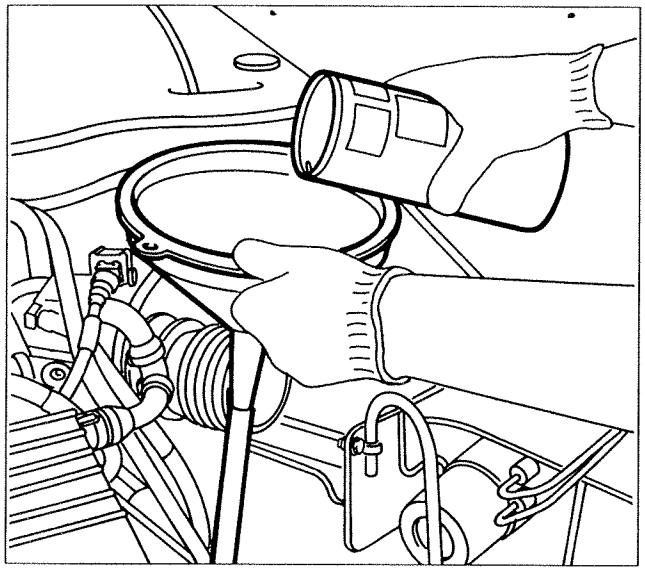
P3U49DB02

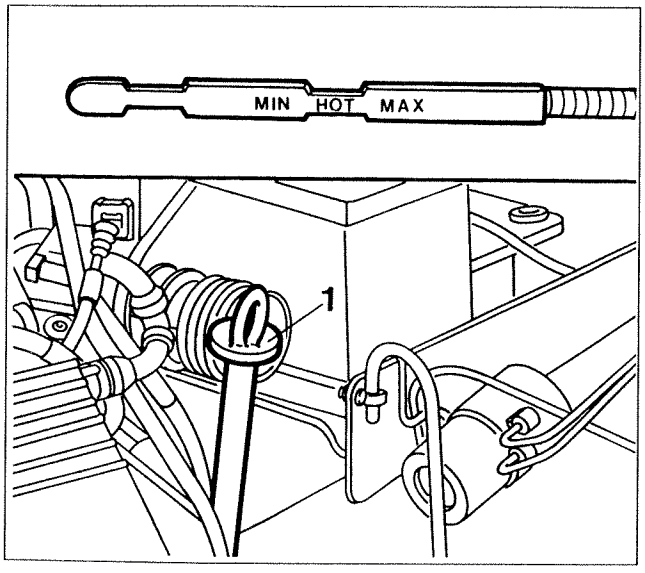

P3U42DB01

CHANGING GEARBOX OIL

Draining

Drain the gearbox oil after a road trip so that the oil reaches working temperature.
Then carry out the following operations:

- undo the nuts and bolts securing the exhaust pipe mounting bracket-shield;
- undo the plug (1) and allow the oil to drain;
- retighten the plug (1) after replacing the seal.

Filling

Withdraw the oil level dipstick and, using a clean funnel so as not to contaminate the oil, pour in the necessary quantity of gearbox oil.

Periodical change: 3l - 2.7 kg
Recommended gearbox oil: TUTELA GI/2

CHECKING OIL LEVEL

NOTE *The gearbox oil should be checked with the engine and gearbox at normal operating temperature (gearbox oil temperature: 70 - 80°C), so the vehicle should be driven for an appropriate period of time before the check.*

Check the gearbox oil level as follows:

- park the vehicle on level ground and apply the handbrake;
- with the engine idling, gently move the selector lever from the P position to position 1, then return it to P;
- remove the oil level dipstick (1) and clean it;
- insert the dipstick fully into its seating;
- remove the dipstick again and check that the oil level is between the MIN and MAX marks on the side of the dipstick marked HOT.

If the oil level is low, identify and eliminate any leaks, then add oil to top up the level.

Copyright Fiat Auto

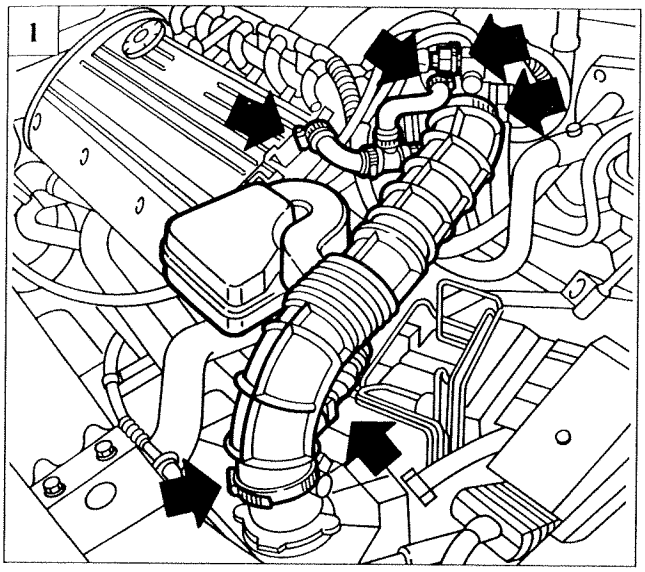

P3U50DB01

GEARCHANGE CONTROL CABLE

Removing

Remove the gearchange control cable by carrying out the following operations from the engine compartment side:

1. disconnect the air temperature sensor connector and undo the clip securing the air intake pipe to the flow meter; disconnect the connector from the engine idle speed actuator and undo the clips securing the oil vapour recovery pipe to the cylinder head and throttle body; undo the clip securing the intake pipe to the throttle body and remove the pipe, complete with resonator;

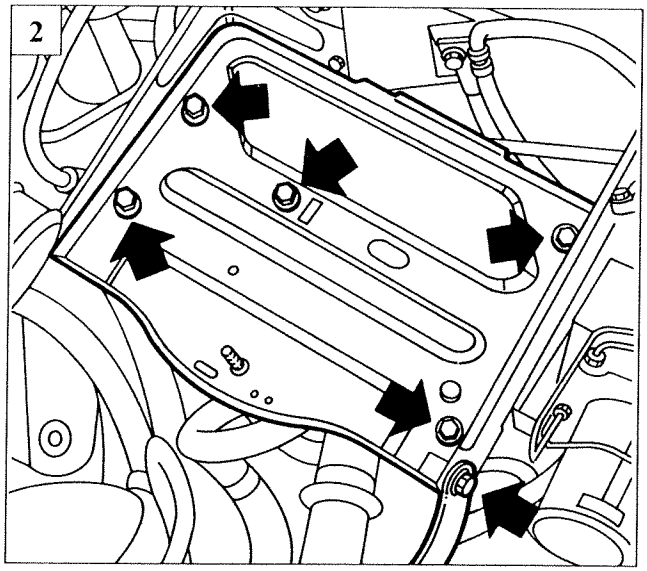

P3U50DB02

Be careful with the resonator pipes. It is advisable to undo the bolt securing the resonator mounting bracket and rotate the bracket downwards.

2. remove the battery, battery cage and resonator mounting bracket by undoing the bolts indicated;
3. undo the nuts securing the adjustment device and the nut securing the rubber pad, then release the gearbox control cable, pulling it upwards and withdrawing it from the adjustment device;
4. remove the clip securing the heat shield to the cable sheath and remove the shield.

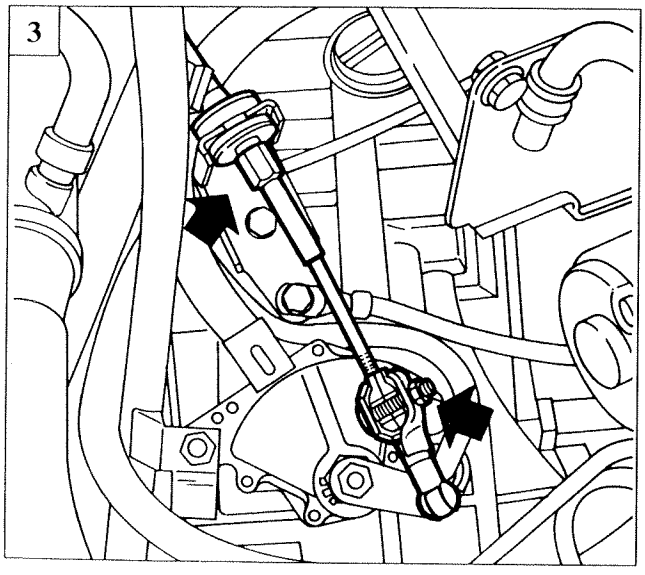

P3U50DB03

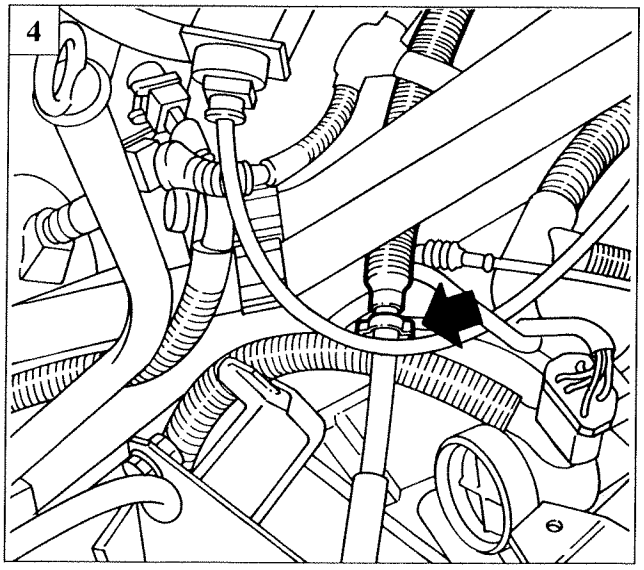

P3U50DB04

1

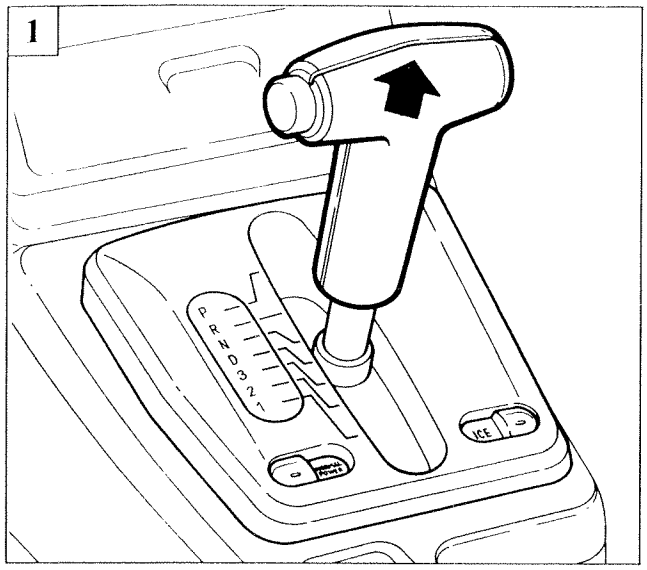

P3U51DB01

2

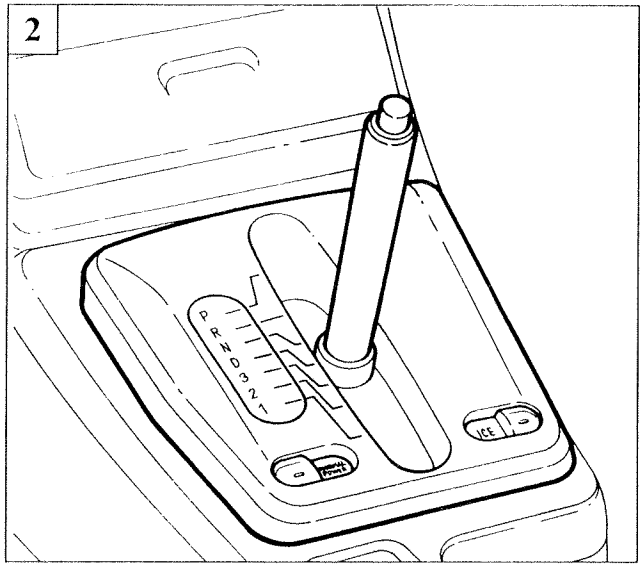

P3U51DB02

3

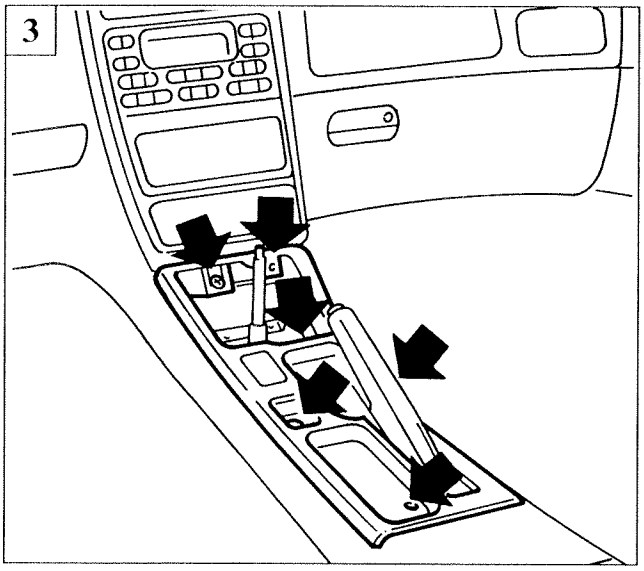

P3U51DB03

Carry out the following operations from inside the vehicle:

1. place the selector lever on P, then withdraw the selector lever handle upwards;
2. release the lever position indicator panel, disconnect the wiring connectors and withdraw the panel;
3. undo the bolts indicated and remove the tunnel front trim;
4. remove the rear ventilation outlets and rear ashtray;
5. undo the bolts securing the tunnel trim and remove the trim itself;

4

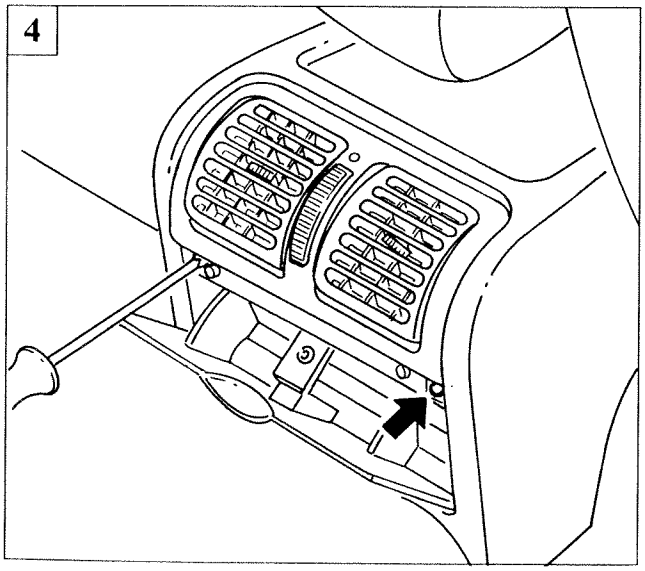

P3U51DB04

5

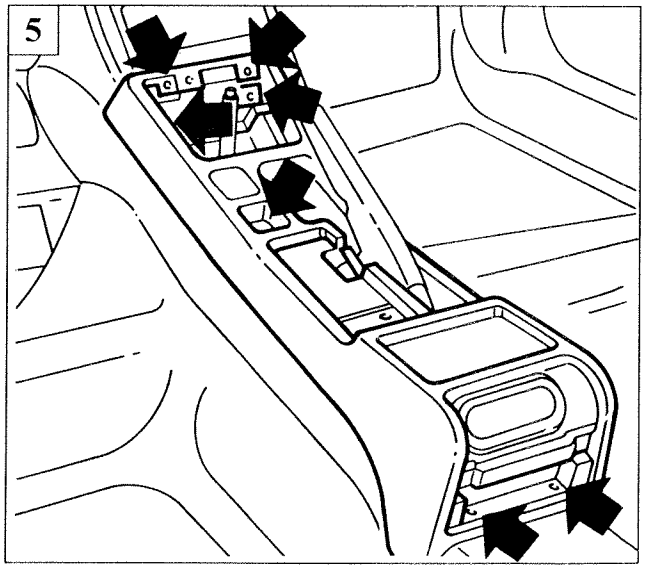

P3U51DB05

Copyright Fiat Auto

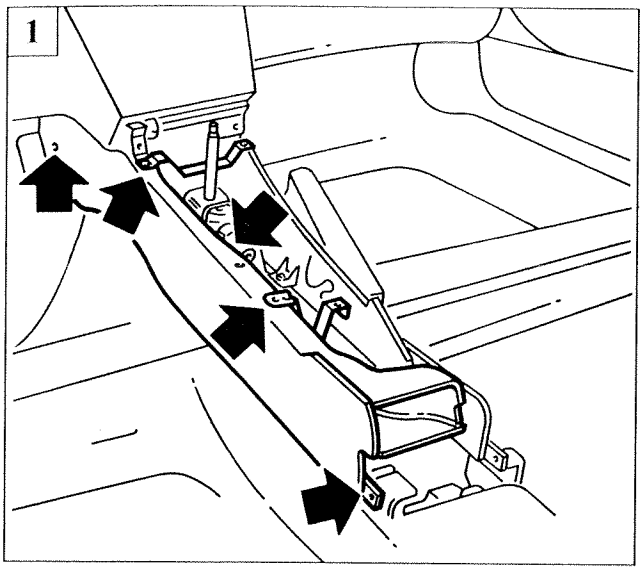

P3U52DB01

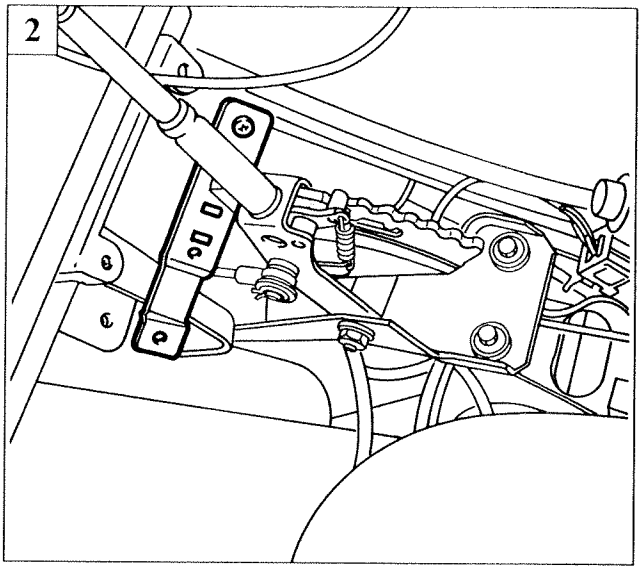

P3U52DB02

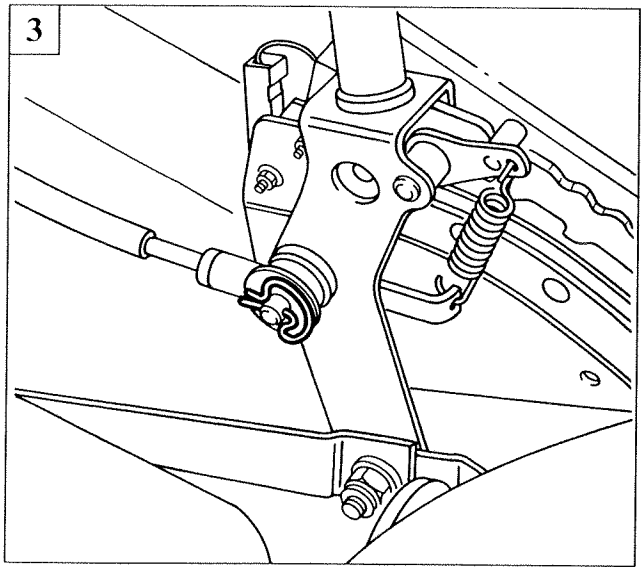

P3U52DB03

1. undo the bolts indicated and withdraw the left side wall;
2. remove the side wall support brackets;
3. remove the split pin securing the gearchange control cable to the selector lever;

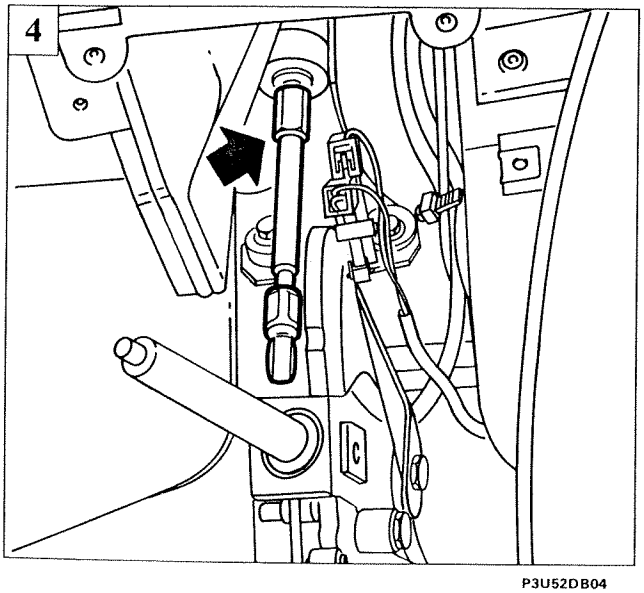

P3U52DB04

4. undo the nut securing the rubber pad, release the gearchange control cable from the bracket and withdraw it.

Take particular care when withdrawing the cable from the rubber guard located on the flame trap.

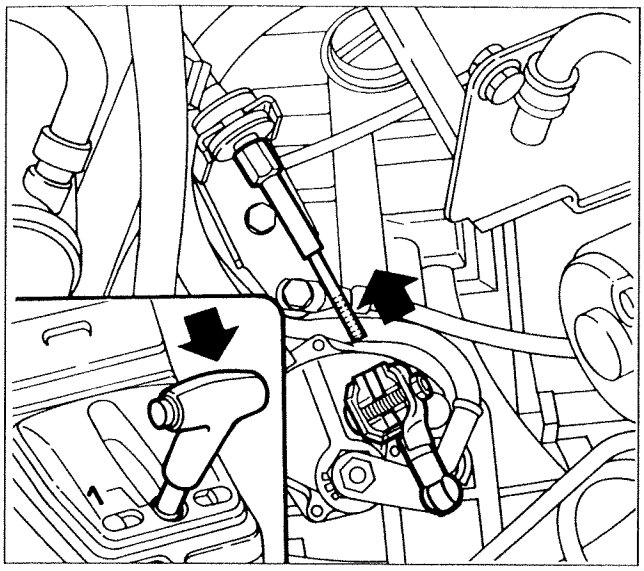

P3U53DB01

Refitting

Refit the gearchange control cable by reversing the procedure for removal from inside the vehicle.

From the engine compartment side, fit the heat shield to the cable sheath and secure it with a clip, then carry out the following operations:

- check that the gear lever is set to P (lever fully forward);
- move the selector lever to position 1;
- fit the rubber pad in the appropriate bracket and tighten the nut;

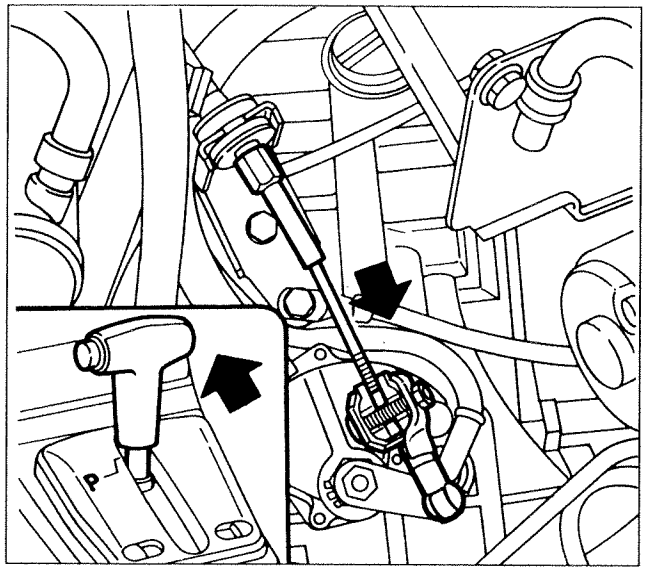

P3U53DB02

- line up the end of the gearchange cable with the adjustment device and, at the same time, from the interior compartment move the selector lever from position 1 to position P, inserting the end of the cable in the adjustment device;
- tighten the adjustment device nuts;
- operate the selector lever and check that at each position the clicking caused by the different positions of the gearbox lever can be perceived.

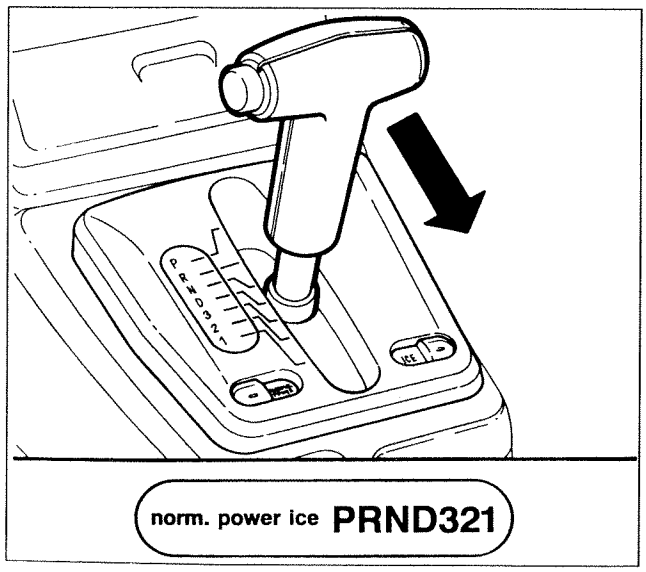

P3U53DB03

Complete reassembly by securing the battery cage, battery and intake pipe and connecting all the sensors.

Finally carry out the following checks:
- engine starting should only be possible with the selector lever at position P or N;
- the appropriate indications on the indicator panel and instrument panel display should correspond to each position of the selector lever.

Copyright Fiat Auto

SELECTOR LEVER

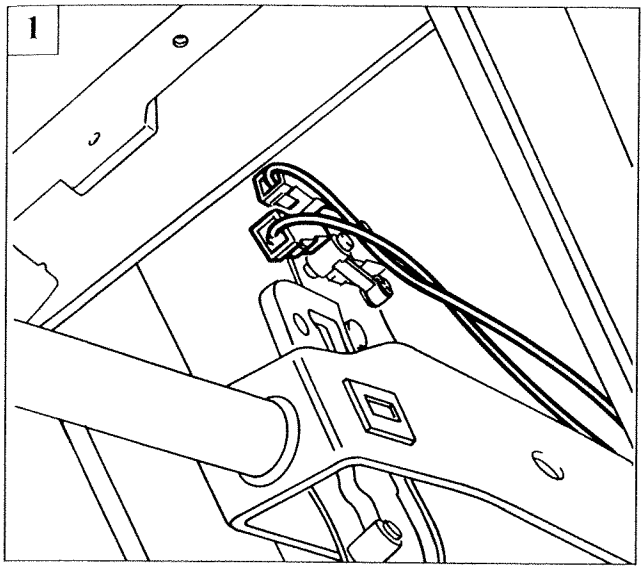

P3U54DB01

Dismantling

After carrying out, from inside the vehicle, the operations described for removing the gearchange control cable, dismantle the selector lever as follows:

1. disconnect the acoustic indicator microswitch connectors;

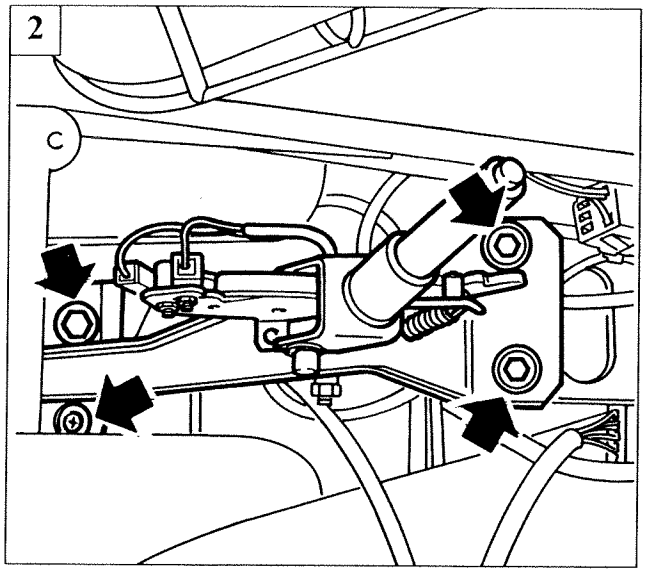

P3U54DB02

2. undo the bolts securing the selector lever mounting and remove the mounting;
3. undo the bolts securing the acoustic indicator microswitch;
4. undo the bolt securing the selector lever safety device and release the positioning device spring;

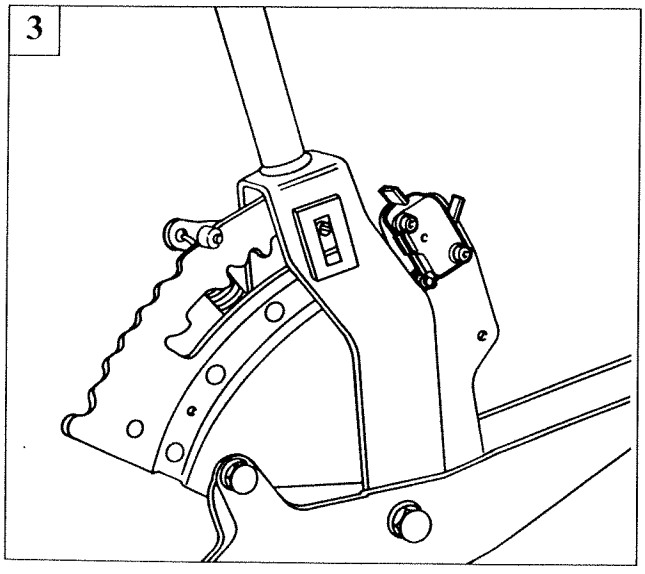

P3U54DB03

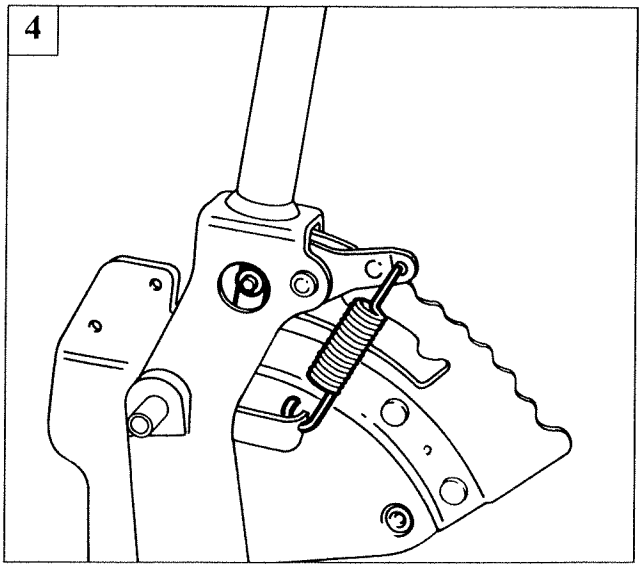

P3U54DB04

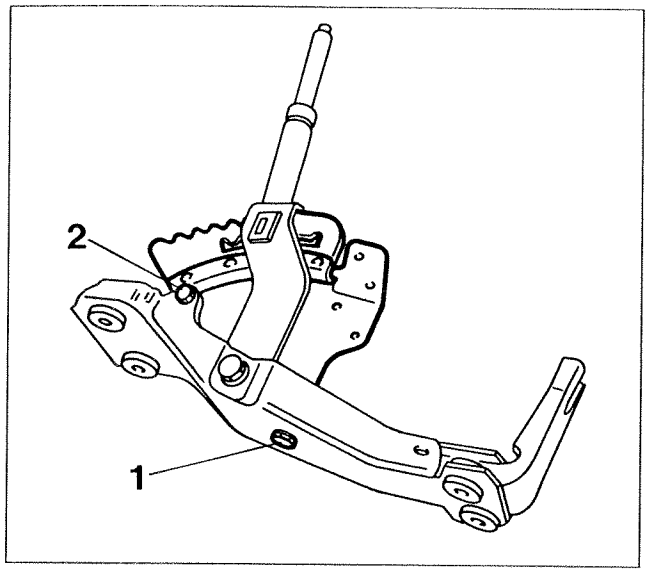

P3U55DB01

- undo the bottom bolt (1) and side bolt (2) and remove the selector;

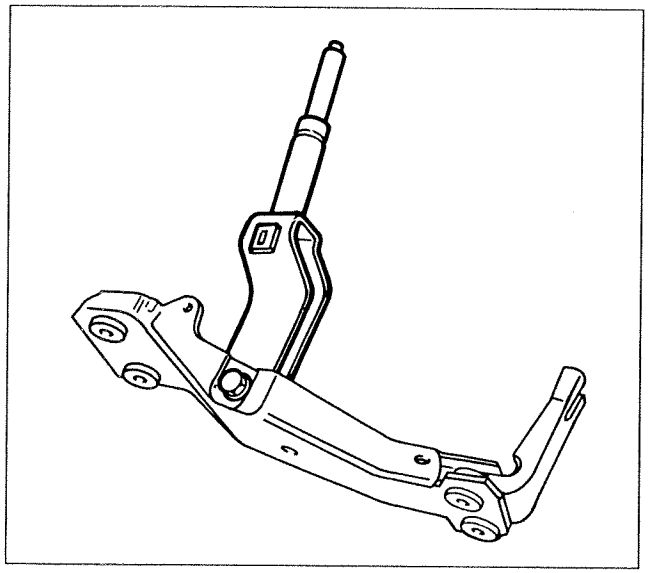

P3U55DB02

- undo the bolt and detach the gear control lever.

Reassembly

Proceed with refitting the selector lever by reversing the procedure for dismantling.

Copyright Fiat Auto

ACCELERATOR CABLE WITH KICK-DOWN SWITCH

Removing

Remove the gearchange control cable by carrying out the following operations from inside the vehicle:
1. release the accelerator cable, which is press fitted, from its pedal;
2. push outwards the rubber pad located around the sheath near the flame trap.

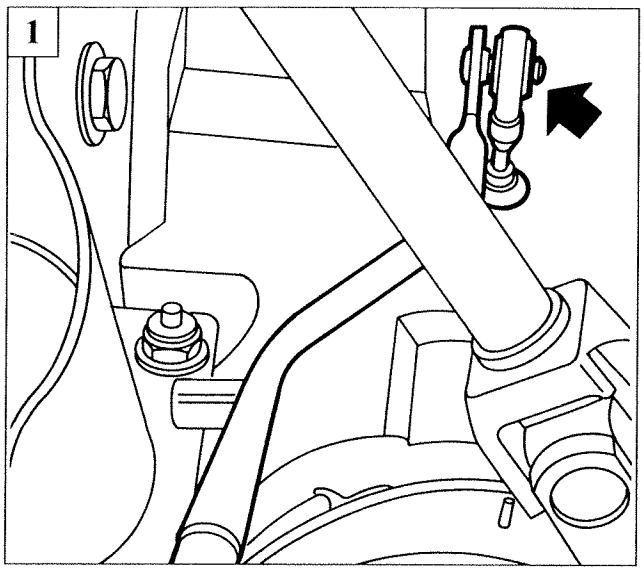

P3U56DB01

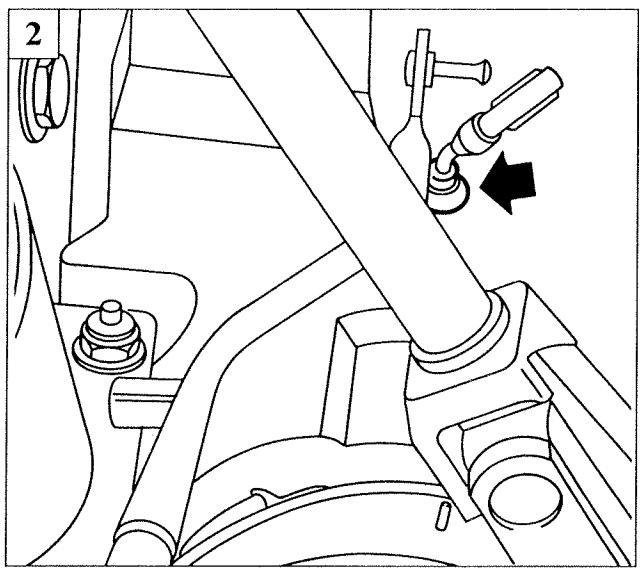

P3U56DB02

Carry out the following operations from the engine compartment side:
3. disconnect the accelerator cable from the pulley on the throttle body;
4. withdraw the clip and remove the adjustment device from the bracket;

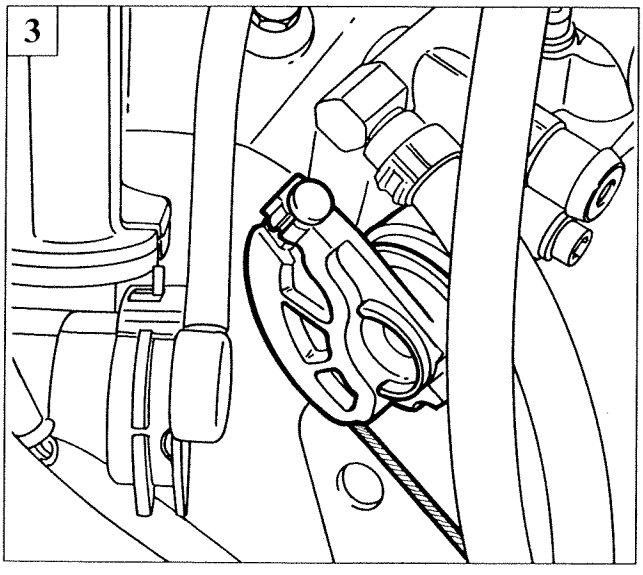

P3U56DB03

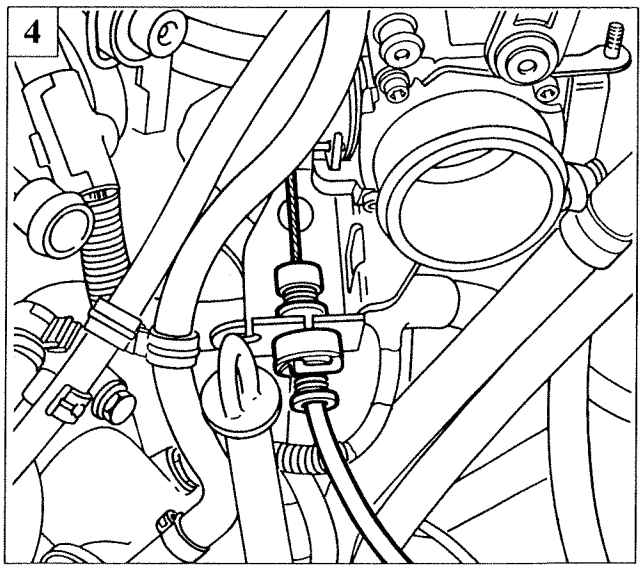

P3U56DB04

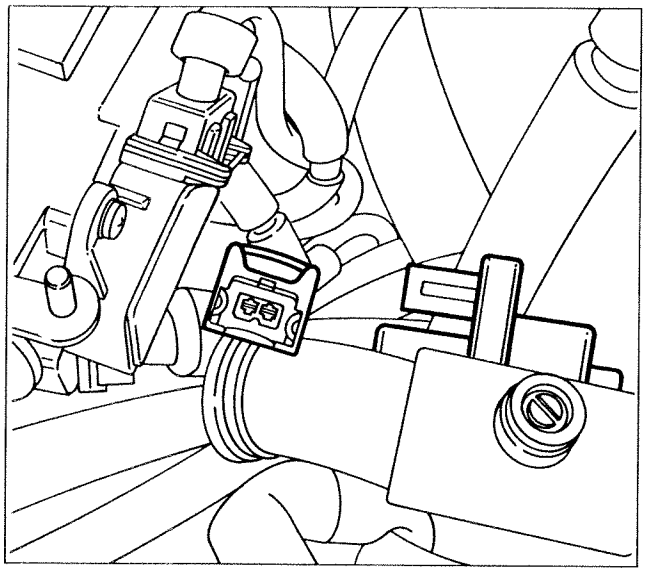

P3U57DB01

- disconnect the kick-down switch connector, then withdraw the accelerator cable complete with kick-down switch.

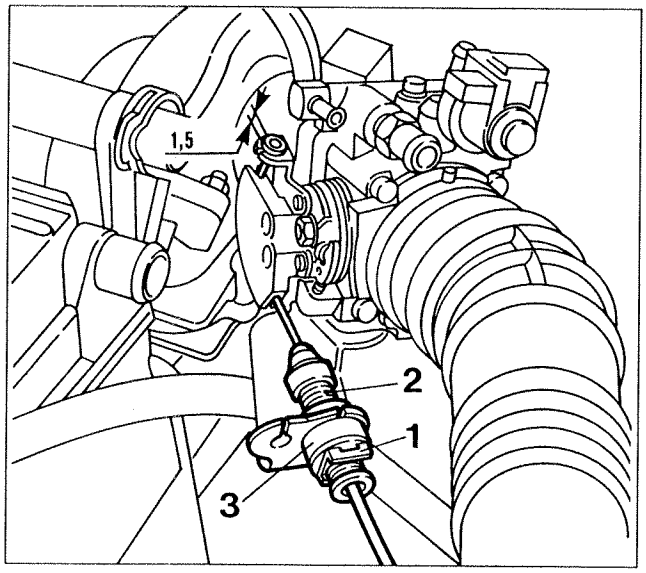

P3U57DB02

Refitting

Refit the accelerator cable by reversing the procedure for removal.

Adjustment

Adjust the accelerator cable as follows:

- remove the clip (1);
- adjust the position of the plastic splined pin (2) by sliding it in the bush (3), until there is an empty travel of 1.5 mm on the accelerator cable before the throttle valve is operated;
- refit the clip (1);

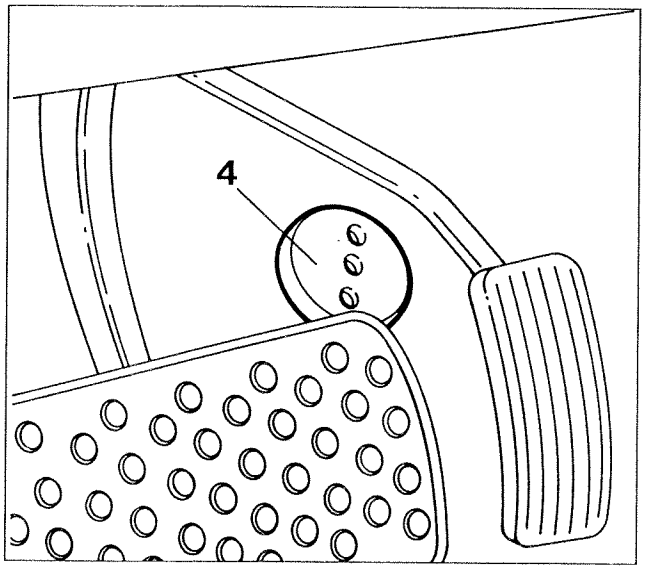

P3U57DB03

- adjust the position of the travel limiter (4) located under the accelerator pedal, so that the maximum travel of the pedal corresponds to the maximum aperture of the throttle valve (detected by the FIAT/LANCIA Tester);

- screw the travel limiter (4) by 7 complete revolutions, corresponding to a further lowering of 7 mm: this operation permits an extra travel of 5 mm of the accelerator cable beyond the throttle valve fully open position, permitting the operation of the kick- down switch.

Copyright Fiat Auto

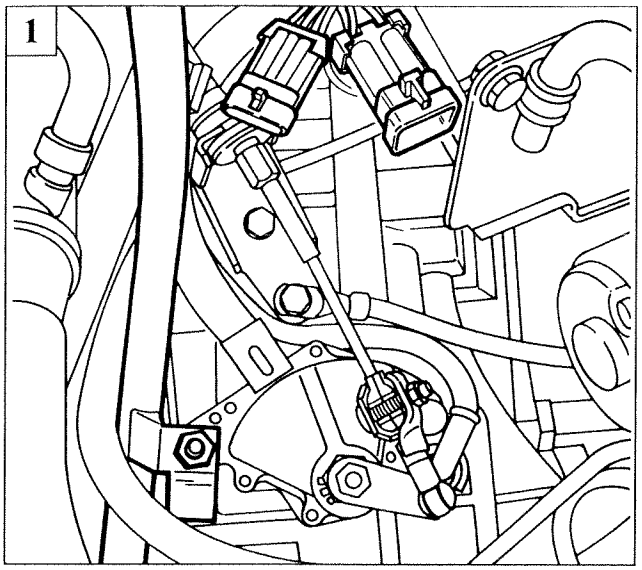

P3U58DB01

GEARCHANGE LEVER POSITION SENSOR

Removing

Remove the air intake pipe complete with resonator and the battery and battery cage, as described for removing the gearchange change, position the selector lever on P, then carry out the following operations:

1. disconnect the sensor's two wiring connectors, undo the nut securing the oil level dipstick tube and remove the tube;

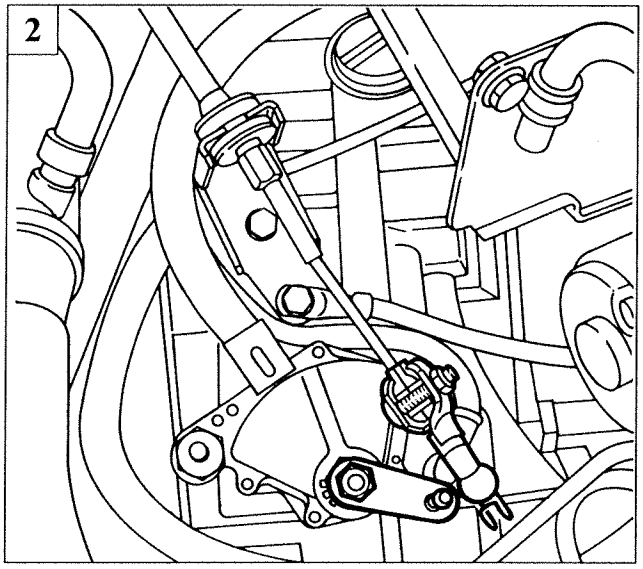

P3U58DB02

2. withdraw the arrester from the gearchange control cable head, then remove the head from the sensor lever;
3. undo the nut securing the lever to the sensor and remove the sensor;
4. release the central nut from the washer and remove the nut, then undo the two side bolts securing the sensor and remove the sensor.

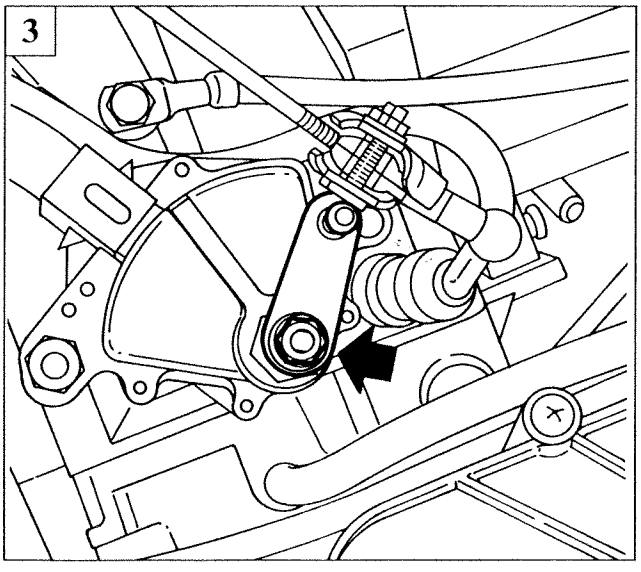

P3U58DB03

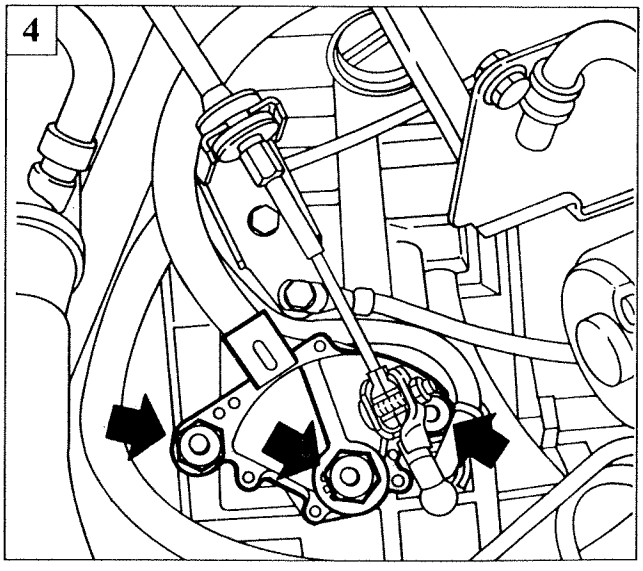

P3U58DB04

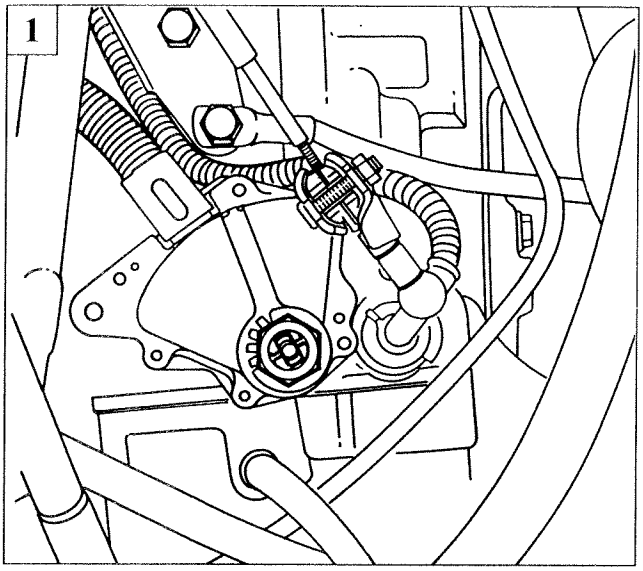

P3U59DB01

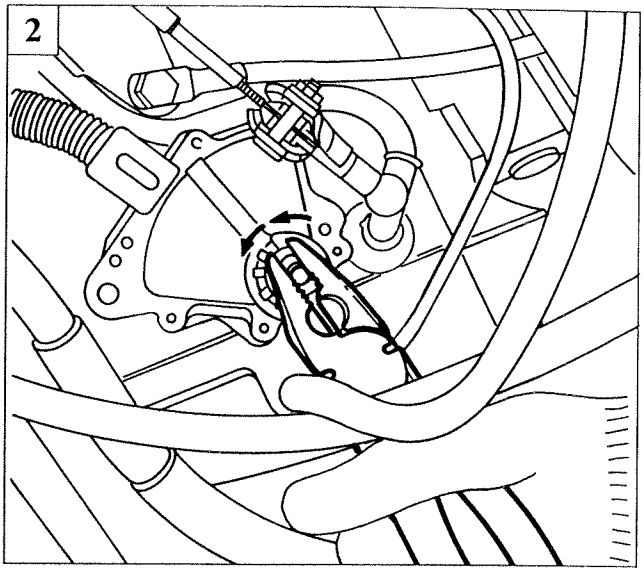

P3U59DB02

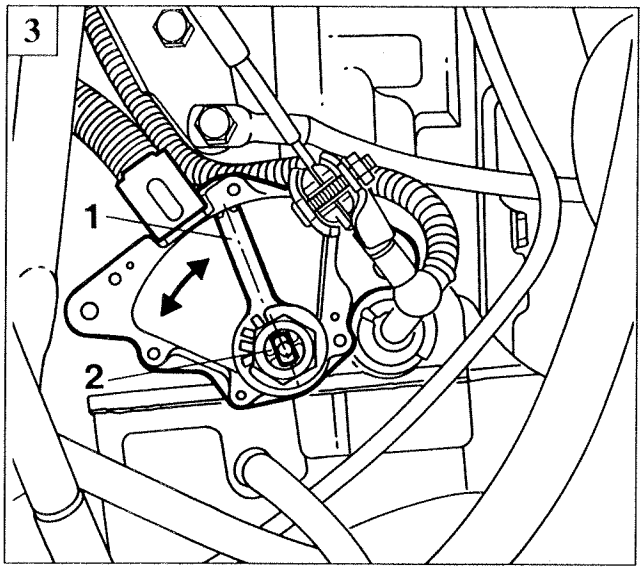

P3U42DB02

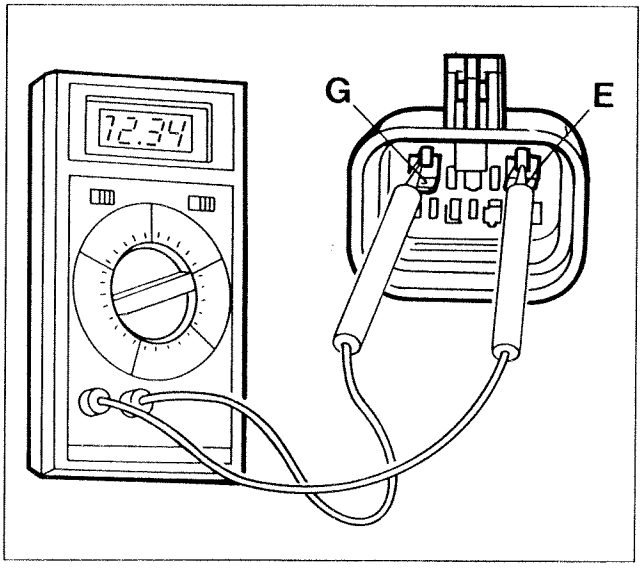

P3U59DB03

Refitting

Refit the selector lever position sensor as follows:

1. fit the sensor, tighten the central nut and lock it with the washer;
2. from the position P (turned fully clockwise), move the lever pin to the N position (rotating the pin by two clicks anti-clockwise);
3. rotate the sensor so that the projection on the top surface (1) lines up with the machined sides of the pin (2), then lock the sensor in this position by tightening the two side bolts.

NOTE *The sensor can be positioned by using a multimeter connected between terminals E and G of the connector 2.1.*

Copyright Fiat Auto

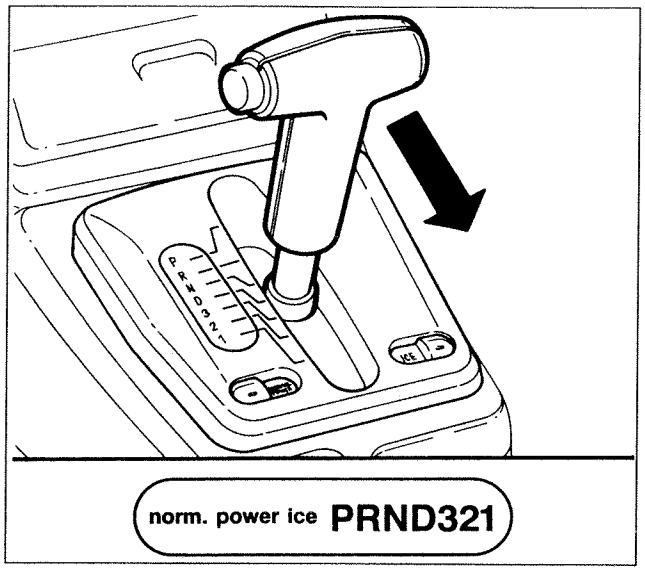

P3U53DB03

Finish refitting the selector lever position sensor by reversing the procedure for removal.

Finally carry out the following checks:

- engine starting should only be possible with the selector lever at position P or N;
- the appropriate indications on the indicator panel and instrument panel display should correspond to each position of the selector lever.

GEARBOX OIL TEMPERATURE SENSOR

Removing-refitting

Remove the air intake pipe complete with resonator and the battery and battery cage, as described for removing the gearchange control cable, then disconnect the gearbox oil temperature sensor connector.

Place the vehicle on ramps, drain the oil, and then carry out the following operations:

- undo the nut and bolt securing the protective plate;

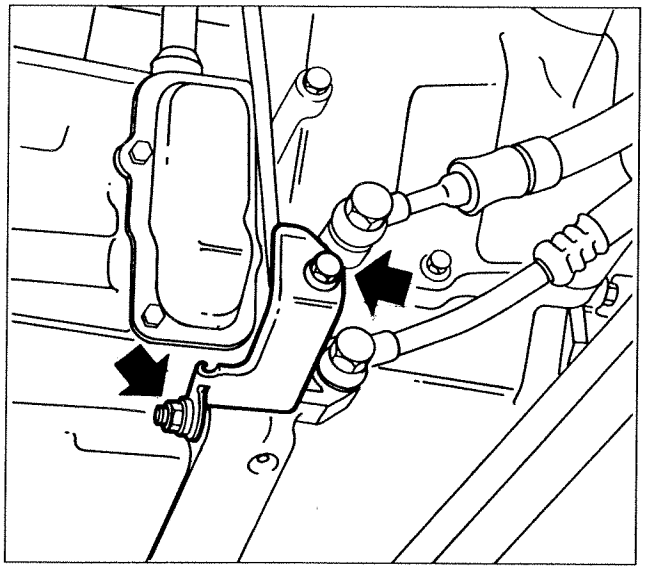

P3U60DB01

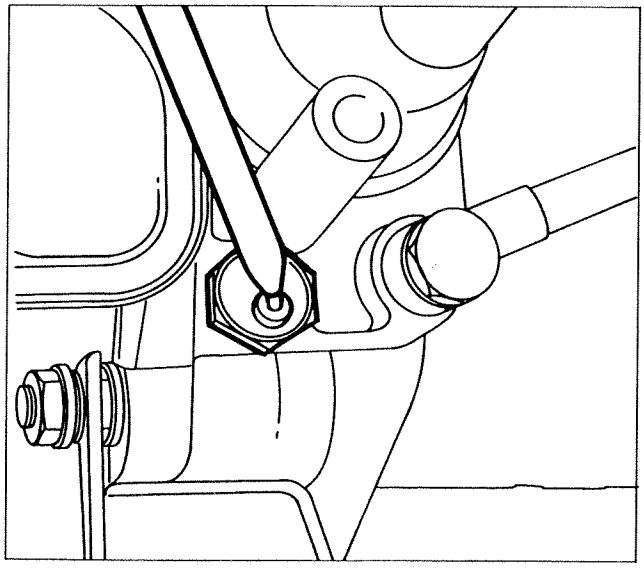

P3U60DB02

- unscrew the sensor and remove it.

MAIN SHAFT RPM SENSOR

Removing-refitting

Remove the air intake pipe complete with resonator and the battery and battery cage, as described for removing the gearchange control cable, then carry out the following operations:
- disconnect the main shaft rpm sensor connector;
- undo the attachment bolt and withdraw the sensor (1) by pulling it upwards.

When refitting, take care not to damage the seal.

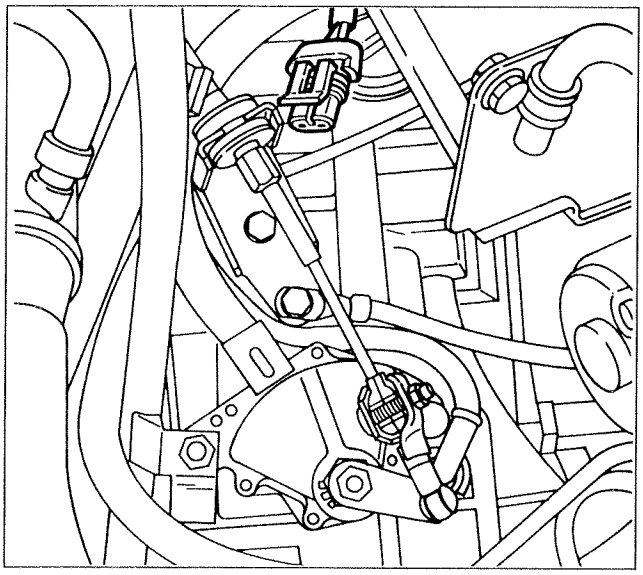

P3U61DB01

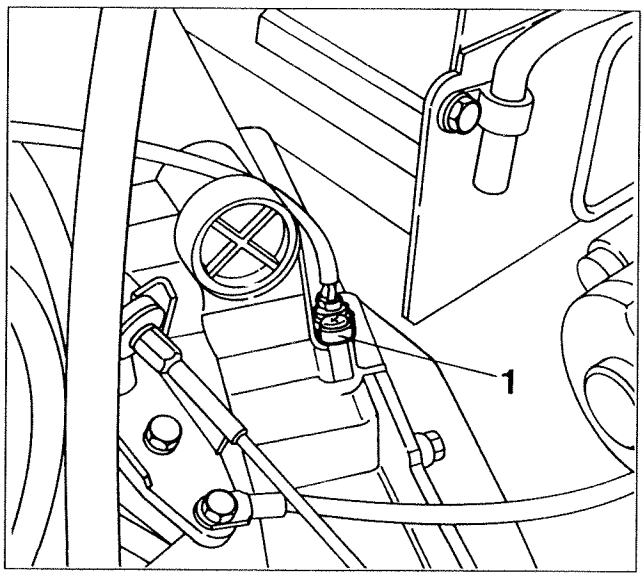

P3U61DB02

VEHICLE SPEED SENSOR

Removing-refitting

Working from the left wheelarch, carry out the following operations:
- disconnect the vehicle speed sensor connector;
- undo the bolt and withdraw the sensor (2) by pulling it upwards.

When refitting, take care not to damage the seal.

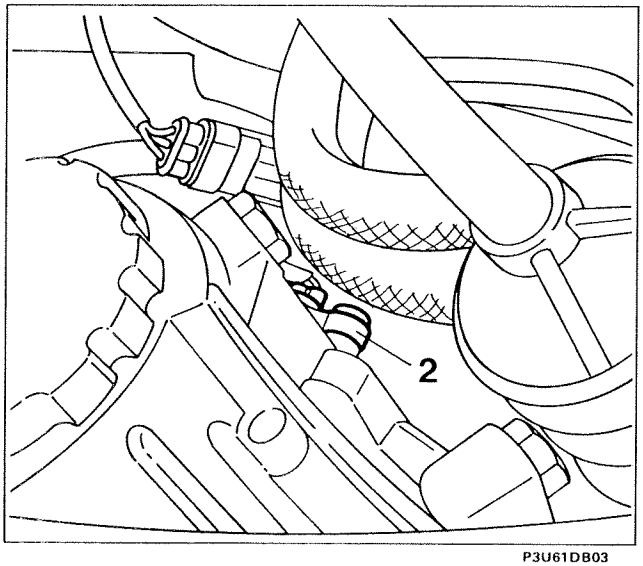

P3U61DB03

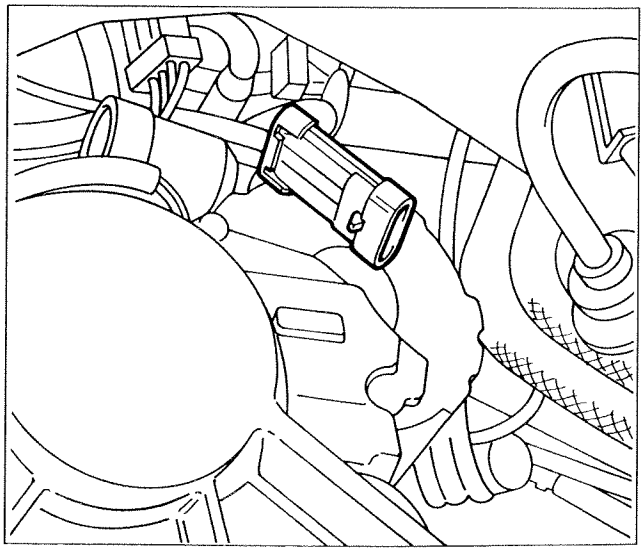

P3U61DB04

Copyright Fiat Auto

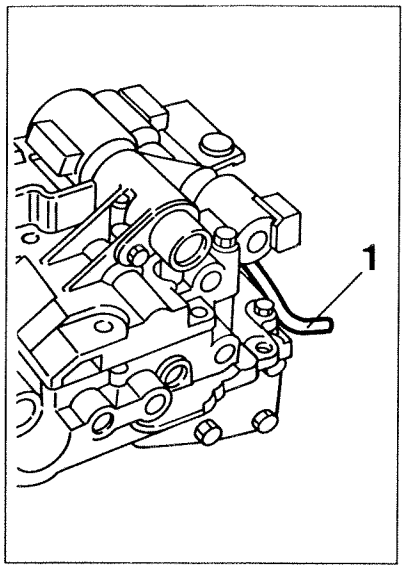

P3U64DB01

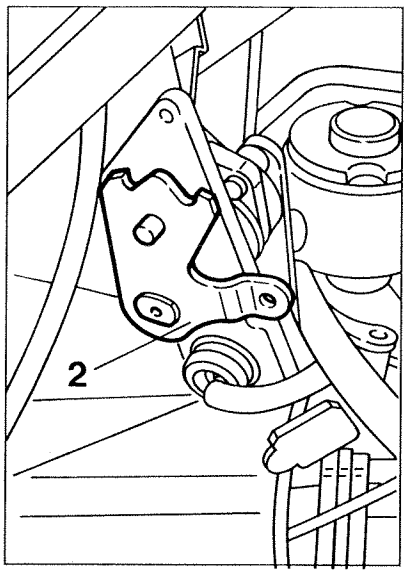

P3U64DB02

Refitting

Refit the valve assembly as follows:

- insert the lever (1) of the selector valve in the hole of the lever (2);

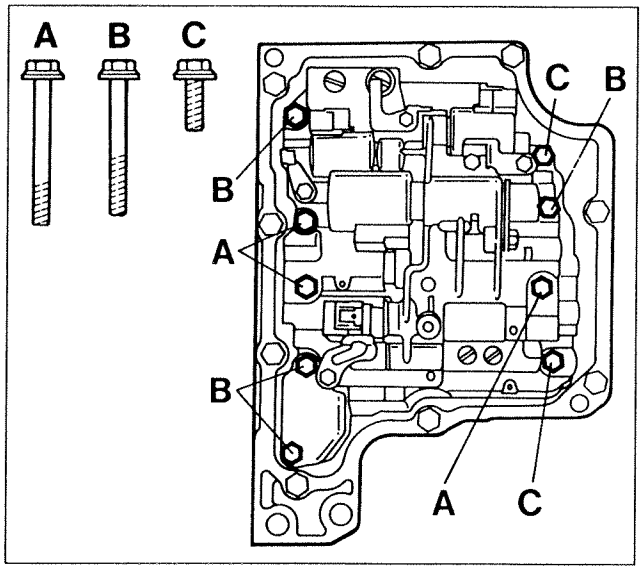

P3U64DB03

0.98 ± 0.2 daNm

- tighten the valve assembly bolts;

The valve assembly bolts are of different lengths.
Position the bolts as shown in the figure and tighten them to the specified torque.

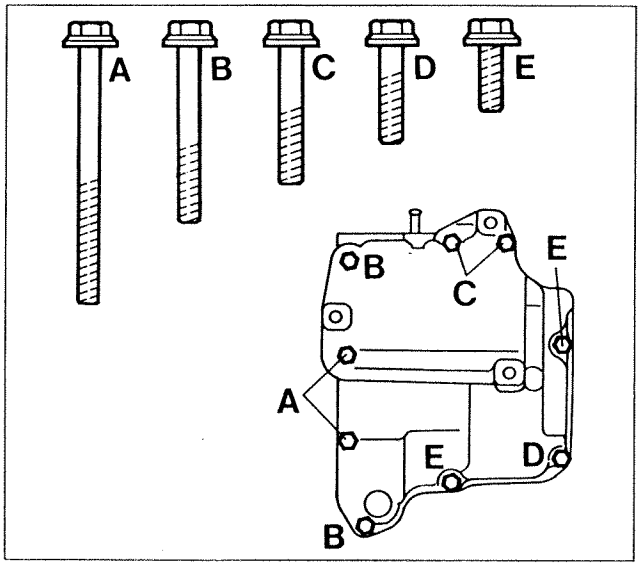

P3U64DB04

2.45 ± 0.49 daNm

- position the valve assembly cover and tighten the relevant bolts;

The valve assembly cover bolts are of different lengths. Position the bolts as shown in the figure and tighten them to the specified torque.

Finish refitting the valve assembly by reversing the procedure for removal.

CONTROL SOLENOIDS

Removing

The gear change solenoids S1 and S2 and the clutch lock-up control solenoid SL can be replaced either by working on the dismantled valve assembly, or on the car, by following the procedure described for dismantling the valve assembly up to removal of the cover.

Do not remove the pressure control solenoid STH for any reason, as its position is set by the Manufacturer during assembly in the factory. If the pressure control solenoid is faulty, the complete valve assembly will have to be replaced.

NOTE *For greater clarity, the illustration shows the solenoids on the dismantled valve assembly. When working on the car, disconnect the relevant connector before disconnecting the solenoid.*

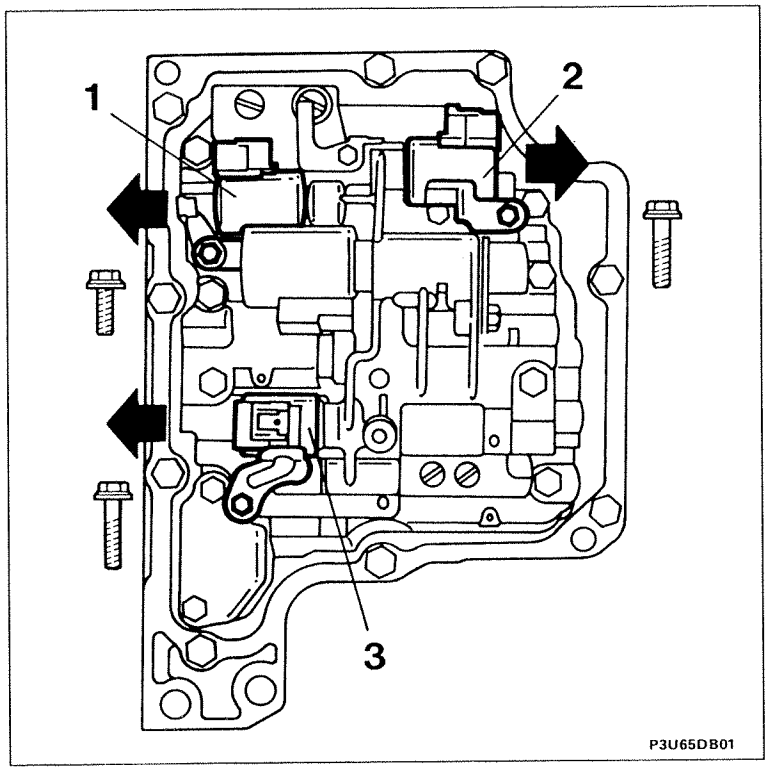

0.67 ± 0.7 daNm

Undo the bolt securing the solenoid in question, then withdraw the solenoid laterally.

1. Gear change solenoid S1
2. Gear change solenoid S2
3. Lock-up clutch control solenoid SL

Refitting

When refitting, take care not to damage the seal.

If several solenoids are being replaced simultaneously, be careful with the bolt securing the solenoid S1, which is shorter than the bolts securing the other two solenoids.

When refitting, tighten the solenoid attachment bolts to the specified torque.

Copyright Fiat Auto

page

ANTI-SKID SYSTEM

- Components 1
- Hydraulic control unit 2
- Rpm sensors 8
- A.B.S. failure warning light 12
- Description of anti-lock braking system operation 13
- Diagram showing Bosch 5.0 A.B.S 18
- Electrical system of Bosch 5.0 A.B.S. 19
- Fault diagnosis 20
- Recommendations to be observed on vehicles equipped with an A.B.S. 21
- Precautions to be observed during repairs to A.B.S. components 21
- Removing-refitting A.B.S. parts 22

FRONT BRAKES

- Removing-refitting 23
- Brake calipers 24
- Brake discs 25
- Brake linings 26
- Bleeding 26

REAR BRAKES

- Removing-refitting 27
- Brake calipers 28
- Autuomatic device for taking up play between rear brake linings and discs and parking brake 29
- Brake linings 30
- Brake discs 30
- Bleeding 31
- Load proportioning valve 31

PARKING BRAKE

- Control cables 32/1
- Settling 33
- Adjustment 33

HYDRAULIC CONTROL SYSTEM

- Removing-refitting 34
- Brake fluid reservoir 34
- Brake pump 36
- Servo brake 37
- Vacuum pump 39
- Brake pedal 40

Copyright Fiat Auto

COPYRIGHT FIAT AUTO

The reproduction, even partial, of the text and illustrations is prohibited.

The information contained in this publication is purely indicative and could be out of date following modifications made by the Manufacturer, at any time, for technical or commercial reasons or in order to conform to legal requirements in the various countries.

Fiat Auto S.p.A.
D.M.C. - M.P.S.
Servizi Post Vendita - Tecnologie Assistenziali
Largo Senatore G.Agnelli, 5 - 10040 Volvera - To (Italia)
Publication no. 506.475/20- Gennaio 1998 - 400
Printed in Italy - Tip. Giraudo - Torino
order no. 60445590

page

ANTI-LOCK BRAKING SYSTEM
- Description 1
- Electrohydraulic control unit 2
- Speed sensors 8
- ABS fault warning light 12
- Description of operation of anti-lock braking system 13
- Diagram of Bosch 5.0 ABS hydraulic system 18
- Electrical system of the Bosch 5.0 ABS system 19
- Fault diagnosis 20
- Instructions to be observed for vehicles fitted with anti-lock braking system 21
- Instructions to be observed during repairs involving components of the anti-lock braking system 21
- Removing-refitting components of the anti-lock braking system 22

FRONT BRAKES
- Removing-refitting 23
- Brake caliper 24
- Brake discs 25
- Brake pads 26
- Bleeding 26

REAR BRAKES
- Removing-refitting 27
- Brake caliper 28
- Automatic rear brake and handbrake adjuster 29
- Brake pads 30
- Brake discs 30
- Bleeding 31
- Brake pressure proportioning valve 31

HANDBRAKE
- Bedding in 33
- Adjusting 33

HYDRAULIC SYSTEM
- Removing-refitting 34
- Brake fluid reservoir 34
- Brake pump 36
- Servo unit 37
- Vacuum unit 39
- Brake pedal 40

Copyright Fiat Auto

COPYRIGHT Fiat Auto S.p.A.

Reproduction of all or part of the text and illustrations is prohibited.

The information in this publication is intended as a guide and could be superseded by modifications introduced by the Manufacturer at any time for technical and commercial reasons or in accordance with local regulations.

Fiat Auto S.p.A.
Direzione Marketing Commerciale
Direzione Post-Vendita - Servizi - Assistenziali
10134 TURIN (Italy) - Corso E. Giambone, 33
Print no. 506.475 - Ottobre 1994 - 500
Printed in Italy - Tip. Europrint - Torino

ANTI-LOCK BRAKING SYSTEM (A.B.S. Bosch 5.0)

DESCRIPTION

The Bosch 5.0 ABS has been optimized with regard to functional capacity, its space requirements and weight. Its reliability has been further improved by also acquiring the following characteristics:

- versatility of assembly;
- principle of recirculation with brake circuits closed;
- electronic control unit with the most power calculation systems.

The main components of the system are:
- new electronic control unit, more powerful and versatile than previous models;
- electrohydraulic control unit which modulates the braking pressure to the brake calipers by means of eight solenoids, two per wheel;
- four sensors (2) and (3), one for each wheel, which measure the angular speed of rotation of the wheels.

Diagram of the Bosch 5.0 ABS anti-lock braking system

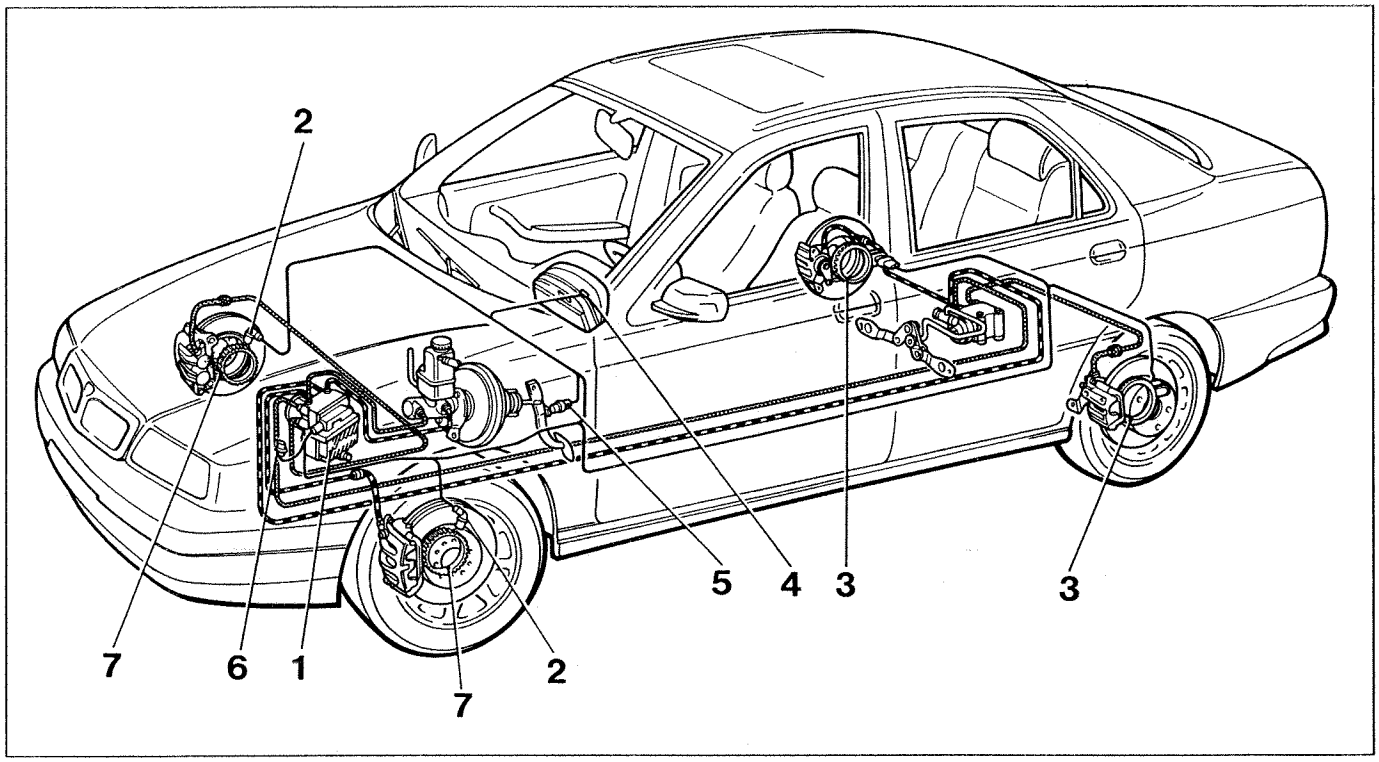

P3U001D01

Hydraulic circuit for front right and rear left brakes

Hydraulic circuit for front left and rear right brakes

1. Electrohydraulic control unit with built-in ECU
2. Wheel speed sensors for right and left front wheels
3. Wheel speed sensors for right and left rear wheels
4. ABS fault warning light
5. Stop lights switch
6. Diagnostic socket for Fiat-Lancia diagnostic instrument or Computerized Diagnosis Station
7. Front phonic wheels

Copyright Fiat Auto

The system is completed by:
- the hydraulic system's pipes:
- specific electrical wiring;
- a switch on the brake pedal to detect the braking condition;
- a warning light (4) located on the instrument panel to indicate that the ABS is working (light goes out after check) or faulty (light stays on).
  The presence of a fault causes the immediate de-activation of the ABS.
  Information concerning faults may be read by connecting the Fiat-Lancia Tester or Computerized Diagnosis Station to the diagnostic socket.

ELECTROHYDRAULIC CONTROL UNIT

The electrohydraulic control unit consists of two sections attached to each other: an electronic control unit and an electrohydraulic control unit.

The electronic control unit is connected to the ABS wiring by means of a multiple connector with 40 terminals, of which 16 are used.
The electronic control unit controls the electrohydraulic control unit on the basis of signals coming from the sensors and with the help of characteristic programs mapped in its memories.

The electrohydraulic control unit is connected to the brake pump and components of the ABS by means of the braking system's pipes.
The main modification in relation to the old model has been to replace the three-way valves with two two-way solenoids for each wheel.

Electronic control unit

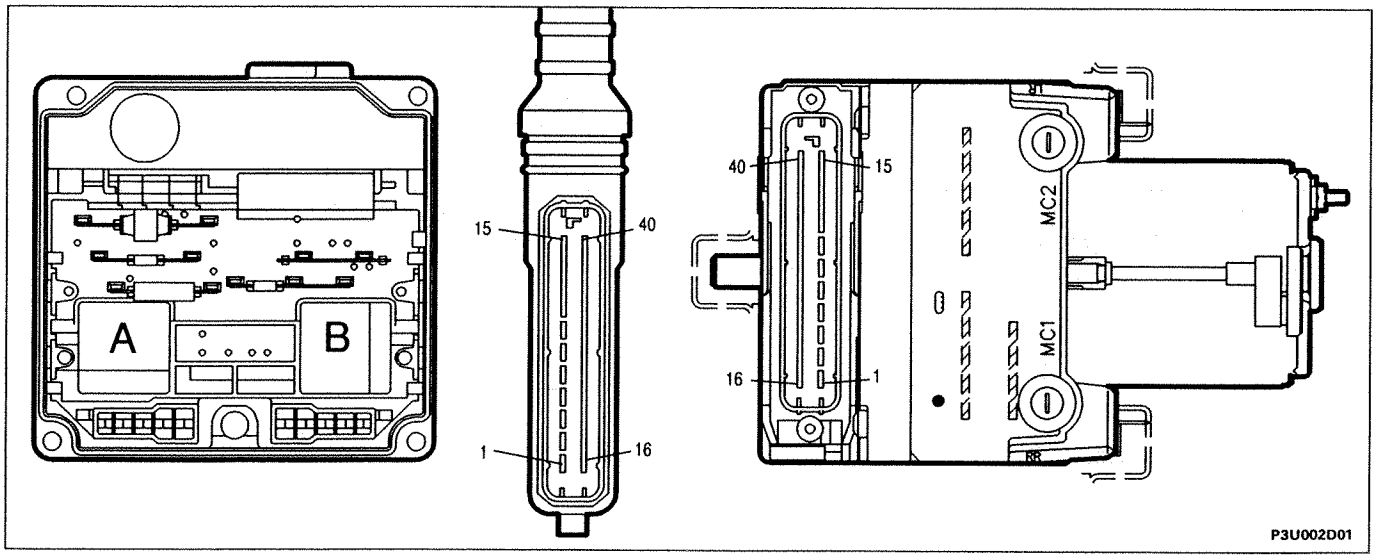

A. Relay incorporated in the control unit, supplies the eight solenoids, cannot be replaced.
B. Relay incorporated in the control unit, supplies the recycling pump, cannot be replaced.

The electronic control unit consists of hybrid circuits with resistors, diodes, transistors and integrated logic circuits. The heart of the system consists of two CMOS microprocessors with 12 k ROM, which carry out the same program independently and mutually check each other. Both receive the same input signals which each processes for itself, and only when the results obtained are identical does the electronic control unit issue the operating command to the electrohydraulic control unit.

If not, for example if there is a fault in the anti-lock braking system, the device **switches itself off and braking takes place in the conventional manner; at the same time, the fault warning light on the instrument panel comes on.**

N°	Wire colour	Destination	N°	Wire colour	Destination
1	N	To earth	21	R	To rear right wheel speed sensor –
2	R	To 50A fuse battery positive +12V	22	V	To front right wheel speed sensor +
3	RN	To 50A fuse battery positive +12V	23	-	Spare
4	A	To 10A fuse +15 terminal of ignition switch	24	V	To front right wheel speed sensor -
5	-	Spare	25	-	Spare
6	-	Spare	26	-	Spare
7	-	Spare	27	-	Spare
8	-	Spare	28	RN	To stop lights switch
9	-	Spare	29	BR	To diagnostic socket K line
10	-	Spare	30	AB	To diagnostic socket L line
11	-	Spare	31	-	Spare
12	-	Spare	32	-	Spare
13	-	Spare	33	-	Spare
14	-	Spare	34	-	Spare
15	-	Spare	35	-	Spare
16	B	To front left wheel speed sensor +	36	-	Spare
17	B	To front left wheel speed sensor –	37	-	Spare
18	G	To rear left wheel speed sensor +	38	-	Spare
19	G	To rear left wheel speed sensor –	39	-	Spare
20	R	To rear right wheel speed sensor +	40	LN	To fault warning light on instrument panel

Identification of pins on electronic control unit and connector

The data relating to the fault are recorded in a non-volatile memory; in fact one of the two microprocessors has a CMOS EEPROM memory whose content is stored even if there is no battery voltage. This memory is also responsible for storing the fault codes, which can then be read during servicing by means of the Fiat-Lancia Tester or Computerized Diagnosis Station.
The signals (alternating or analogue) sent by the wheel speed sensors to the electronic control unit are transformed by the input amplifier into square-wave (or digital) signals. The frequency of these signals informs the control unit of the corresponding speed, acceleration or deceleration values of the individual wheels.
From the combination of the individual peripheral speeds of the wheels, a reference speed is calculated which, constantly updated, indicates the vehicle's speed at each instant.

When the driver presses the brake pedal, each wheel can decelerate to a different extent: by comparing the peripheral speeds of the individual wheels with the reference speed, the skidding of each individual wheel is constantly monitored.
If the braking force causes braking of one wheel in relation to the others (*split*), the electronic control unit issues the command to the electrohydraulic unit's solenoids to reduce the braking force on the wheel which has reported a loss of grip. The wheel in question then resumes its speed.

The electronic control unit also stores deceleration and acceleration thresholds which each individual wheel must never exceed. So, by means of a systematic, continuous and very quick comparison of the skid, deceleration and acceleration values of the wheel, the rolling of the tyre during braking is monitored. As soon as the combined values for acceleration/deceleration, skid, deceleration/acceleration and *split*, the electronic control unit intervenes, driving the electrohydraulic control unit's solenoids in the three adjustment stages to reduce, maintain or re-supply to the brake calipers the pressure generated by the driver on the brake pedal, so returning the braking condition to the optimum designed by the system.

These stages cause an intermittent but extremely fast adjustment cycle which is repeated until the car stops. The electronic control unit controls the various stages, delivering pulses of varying current intensity to the solenoids. It also ensures that both rear wheels are supplied with the same braking force, applied to the rear wheel which is most likely to lock, i.e. that with least grip (to ensure the best possible stability on the trajectory).

Copyright Fiat Auto

If a wheel has a deflated tyre, the ABS intervenes, if necessary, checking the braking condition.
The ABS system is also active during braking in reverse gear.
Normally, the intervention of the device ceases at speeds of less than 2.75 km/h, to permit full locking of the wheels when the vehicle is stopped.
Since the parameters checked by the control unit (speed and acceleration of the wheel) are influenced by the inertia of the wheel/tyre assembly, cars equipped with the anti-lock braking system ***must only be fitted with wheel rims, tyres and brake pads recommended and chosen by the Manufacturer.***

If chains are fitted, the resulting rolling condition produces signals which, suitably filtered in the control unit, do not exclude the anti-lock braking system in the case of driving on hard and compact snow.

Under *aquaplaning* conditions, the electronic control unit already detects an irregularity during normal driving, without braking, since the driving wheels tend to turn at a higher speed than the driven wheels.
This condition would lead to the electronic control unit providing an adjustment cycle which did not meet requirements; for this reason, the anti-lock braking system switches itself off temporarily (without the warning light necessarily coming on, in view of the brevity of the phenomenon) and switches itself on again as soon as the *aquaplaning* condition ceases.

The electronic control unit also has a **safety circuit** which is responsible for supervising the efficiency of the system before each departure and during driving.
The safety circuit carries out the following self-checks:

1. after the ignition has been switched on and for a period of about 2 seconds, it checks the operation of the control unit, the relays which drive the solenoids and the sensor connection;
2. after the engine has started, as soon as the speed of 6 km/h is exceeded, it drives the solenoids and recycling pump for an operating check; it also checks the presence of the 4 speed signals;
3. whenever the speed of 24 km/h is exceeded, starting from a standstill, it checks the presence of the 4 speed signals;
4. during driving, it continuously checks the peripheral speeds of the wheels against the calculated reference speed, it checks the memory conditions and supervises the operation of the two relays;
5. during driving, it constantly checks the battery voltage.

If one of these irregularities is detected, the anti-lock braking system switches itself off, and this is indicated to the driver by the fault warning light on the instrument panel coming on.

Operation of the electronic control unit

When the vehicle is moving (speeds of over 6 km/h), the electronic control unit is constantly informed by the speed sensors (4) of the rolling conditions of the individual wheels. In the absence of any braking action, the control unit recognizes the vehicle's speed from the signals of these sensors.

When the driver presses the brake pedal, the vehicle which was driving at constant speed begins to brake. As a result of the braking force, the wheels begin to slow down more than the vehicle, and to varying degrees with respect to each other.

Under these conditions, the alternating voltage signals generated by the speed sensors (4) and sent to the input amplifier (5) are converted into square-wave signals corresponding to the speed values; in this way the wheel speeds are measured every 1 ms. These speed values, suitably processed by an acceleration limiter, are transferred to the main program (8) every 10 ms.

The microprocessors (1), which independently execute the same program and at the same time also mutually check each other, process a reference speed from the combination of the individual wheel speeds. This reference speed is continuously updated and it indicates the vehicle's speed at each moment of braking.

By comparing the individual wheel speeds with the reference speed, the microprocessors (1) can monitor the skid signals of each wheel.

If the braking force applied by the driver continues to increase up to the maximum available friction coefficient, the deceleration also increases and consequently the wheel speed is further reduced to the point where it impairs the vehicle's grip on the ground (wheels tending to lock).

When this situation arises, i.e. the instability limits are exceeded, the microprocessors (1) start a control cycle through the output amplifier (7). This amplifier generates control signals which earth the circuits of the solenoids (6) FL-FR (front) and RL-RR (rear).

In this way the electrohydraulic unit can modulate the pressure on the brakes by implementing the pressure reduction, maintenance and increase stages. The cycle stops when the stability limit is regained, i.e. when the wheel creep is reduced and grip on the ground is regained.

The electronic control unit is supplied when the ignition is on (+15), via a 10A fuse (17) (on pin 4).

It has two integrated relays which cannot be replaced; these relays have diodes for reducing over-voltages and are also protected by fuses (16 and 17) rated at 50A and 25A.

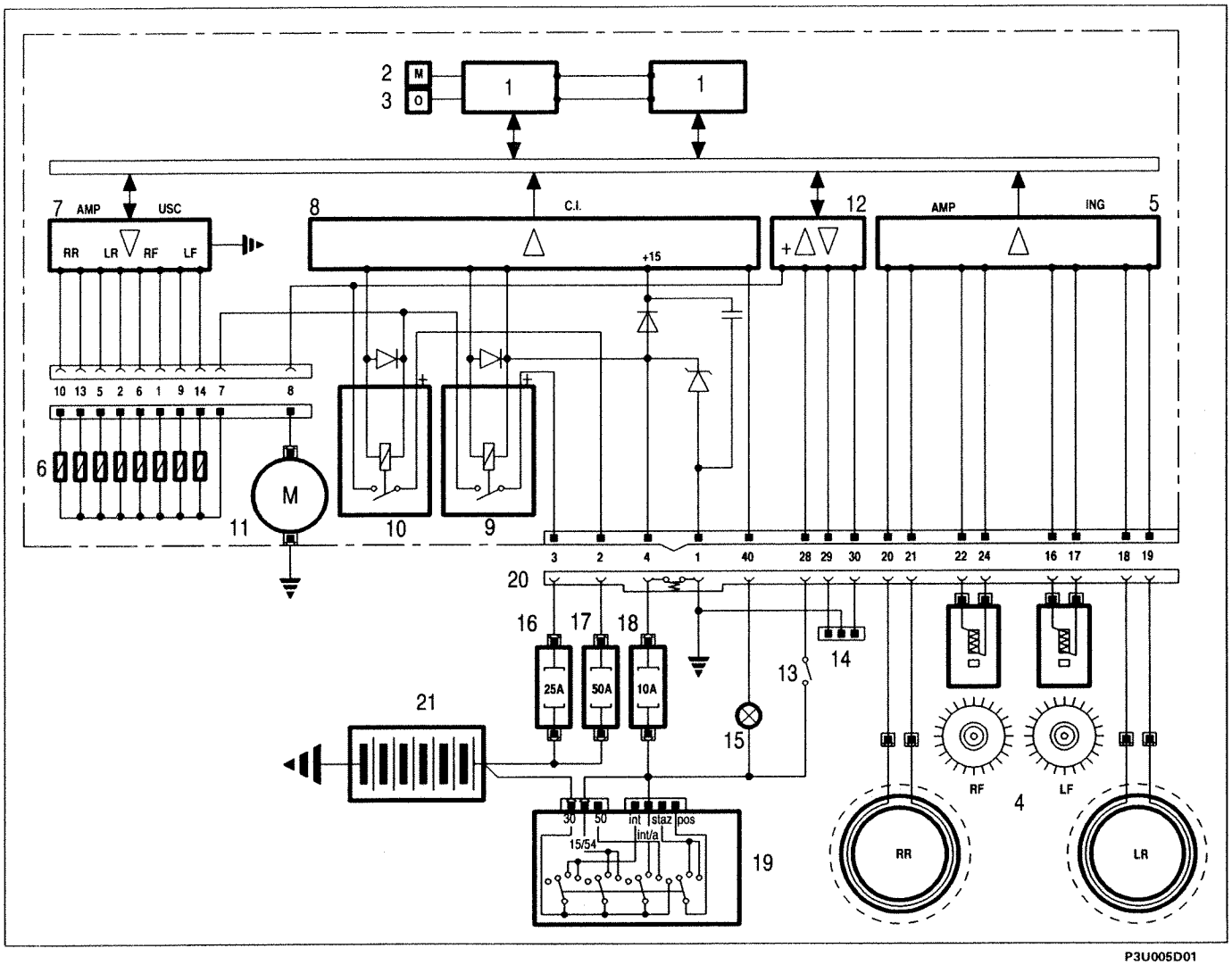

1. Microprocessors
2. EEPROM memory
3. CMOS EEPROM memory
4. Wheel speed sensors
5. Input amplifier
6. Solenoids
7. Output amplifier
8. Integrated circuit with memory
9. Solenoid supply relay
10. Recycling pump supply relay
11. Recycling pump
12. Diagnosis/signal interface
13. Stop lights switch
14. Diagnostic socket for F.L.T. or C.D.S.
15. 1.2 W ABS warning light
16. 25A fuse
17. 50A fuse
18. 10A fuse
19. Ignition switch
20. Connector
21. Battery

Copyright Fiat Auto

The relay (9) supplies the eight solenoids (6), two for each brake caliper.
The relay (10) supplies the recycling pump (11).
The integrated circuit with memory (8) drives the two relays (9) and (10) and manages the operation of the fault warning light (15) (1.2 W bulb).

With the engine running and the brake pressed, the electronic control unit receives a voltage signal on pin 28, informing it that the driver is braking. This information is useful not only for controlling braking, but also under particular conditions, for example a braking force being applied during acceleration when the latter is so fast as to make the wheels skid, or in the case of rough road surfaces (undulations, steps) which can cause variations in wheel speeds for reasons not associated with the current braking.
Under these conditions, the microprocessors (1) work out a strategy linked to the changes in wheel speeds at these particular moments, bringing the current braking within correct parameters. Since these are particular braking control conditions, a false connection between the switch on the brake pedal and the control unit does not impair the efficiency of the system. For this reason it is not indicated by the warning light coming on, nor is the ABS system disabled.

The module (12) serves for data transmission via the diagnostic socket (14) to the Fiat-Lancia Tester or the Computerized Diagnosis Station.

Self-test

The electronic control unit comprises a self-test system which checks the system's components before every departure and during driving.
If a malfunction is identified, the control unit's safety circuit excludes the ABS, nevertheless ensuring normal operation of the conventional braking system. The driver is informed that the ABS has been switched off by the warning light on the instrument panel coming on.

For safety purposes the electronic control unit, through the two microprocessors, can check all the logic functions, its software and all the input signals. When the two microprocessors receive identical input signals, they supply identical output signals.
If a logic discrepancy arises between input signals and output response for a certain period of time, the safety system detects the fault and the ABS is de-activated.

The circuits of the solenoids and recycling pump motor and their supply relays are also monitored to make sure they are not broken.
In addition to these continuous checks, the solenoids, recycling pump motor and the relevant circuits are actively monitored by an active section called test cycle or BITE (Built-In-Test-Equipment).
At the beginning of each journey, as soon as the speed of 6 km/h is exceeded, this test cycle consists of briefly energizing the solenoids and the recycling pump motor. The control unit analyses the response, and if there is a fault, it de-activates the ABS.

The wheel speed sensors and their electrical connections are also checked in various ways:

1. the control unit checks whether the sensors are broken, both when the vehicle is stopped and when it is moving;
2. on departure, the wheel speed is compared with the reference speed; if the wheel speed remains below a minimum threshold (because of a faulty sensor), a fault condition is immediately detected;
3. when the vehicle is moving, the control unit checks whether any of the sensors transmits an insufficient speed value (for example because of an incorrect tooth count or incorrect wheel diameter); it can also do this when the vehicle is travelling at high speed. In all these cases, the fault condition is detected immediately;
4. the plausibility of the valve intervention times is checked by special check signals; if any of these times is excessive, a fault condition is detected and the ABS is consequently deactivated.

NOTE *If the connector (20) on the specific wiring loom is not connected, the pins (1-40) are connected automatically by a jumper connection; in this way the ABS fault warning light on the instrument panel is earthed and so comes on.*

Electrohydraulic regulation unit

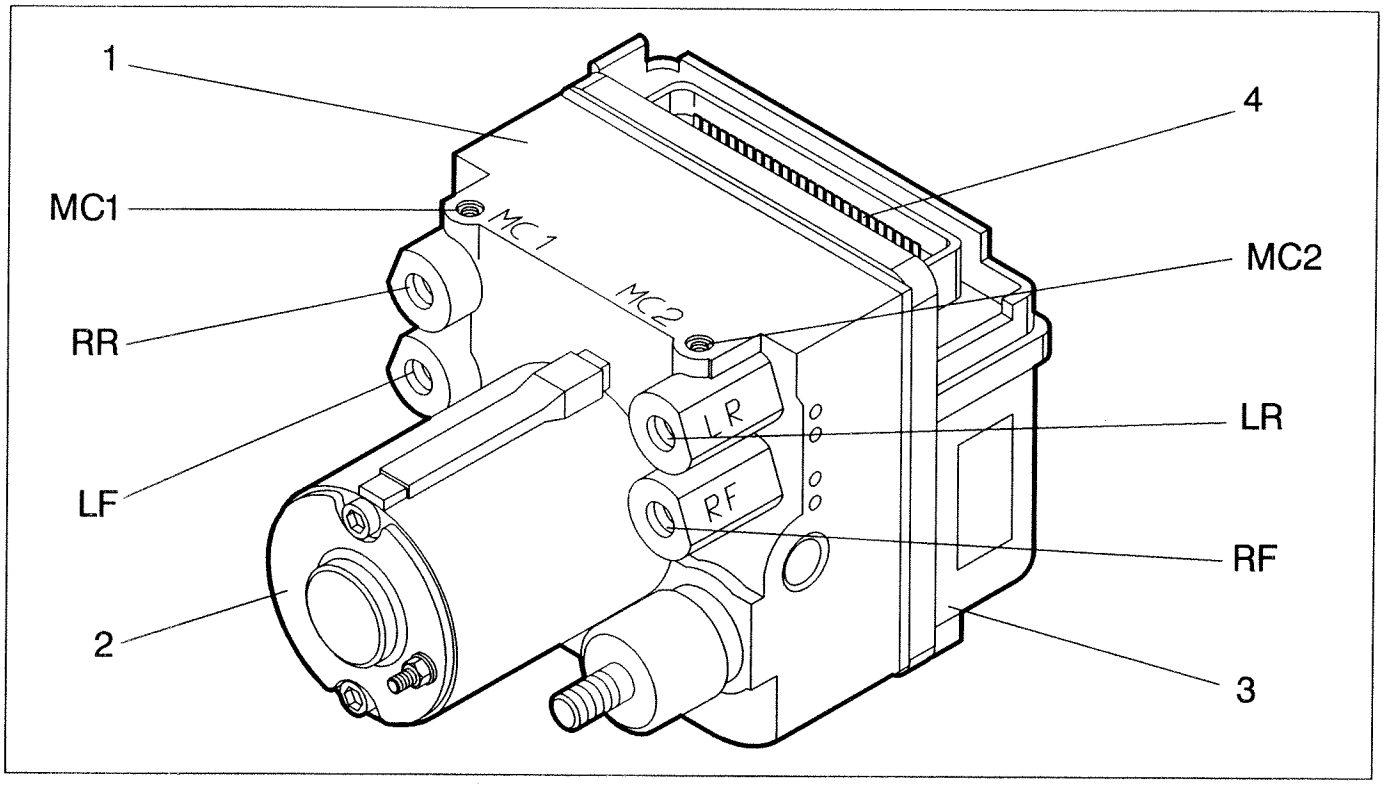

P3U007D01

Identification of electrohydraulic regulation unit outputs

MC1. Supply connection from brake pump M10x1
MC2. Supply connection from brake pump M10x1
LF. Delivery connection to front left brake caliper M10x1
LR. Delivery connection to rear left brake caliper M10x1
RF. Delivery connection to front right brake caliper M12x1
RR. Delivery connection to rear right brake caliper M12x1

1. Electrohydraulic regulation unit
2. Recycling pump
3. Electronic control unit
4. 40-pin connector

The electrohydraulic control unit is located on the left in the engine compart, near the battery. It is connected to the brake pump and brake caliper cylinders by means of the brake pipes, and it forms an integral part of the electronic control unit.
Its function is to vary the brake fluid pressure in the brake caliper cylinders in accordance with the control signals coming from the electronic control unit.
It consists of eight two-way solenoids (two for each hydraulic circuit) and a double-circuit recycling pump (2).
The eight solenoids and the recycling pump are driven by the electronic control unit in accordance with signals from the four wheel speed sensors. In particular, the pump permits the recycling of brake fluid during the pressure reduction stage, making it available upstream of the solenoids for the subsequent pressure increase stage.
The accumulators enable the brake fluid to be absorbed during the pressure reduction stage.

The unit is connected to the braking system by connections identified by stamped codes as shown in the Figure.
The electrohydraulic regulation unit cannot be overhauled and is fail safe provided it is not tampered with. If a fault is detected, it must be replaced as a complete assembly.
The spare part is supplied filled with brake fluid (DOT 4) with the solenoids not supplied. The braking system is bled and filled in the same way as a conventional system.

NOTE *To avoid errors in connecting the various circuits of the braking system during repairs, the connections on the hydraulic modulating unit are different sizes (M10x1 and M12x1).*

Copyright Fiat Auto

WHEEL SPEED SENSORS

The sensors are of the inductive type; the front sensors are located on fixed parts of the suspension, and the rear sensors are incorporated in the wheel hubs.

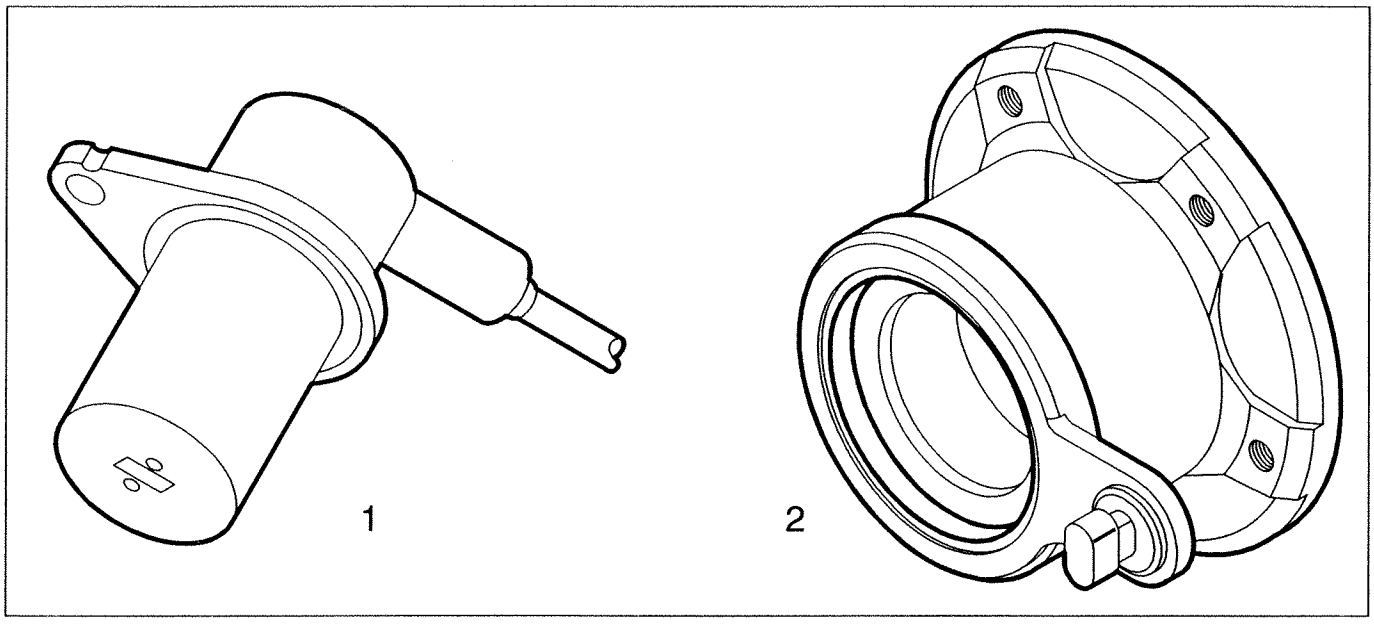

P3U008D01

1. Front wheel speed sensor, with rectangular-section ferro-magnetic (Bosch)
2. Rear wheel speed sensor, incorporated in the hub (SKF)

Bosch DF6 front sensors

The front sensors are located on the suspension vertical links.
The corresponding phonic wheels with 44 teeth are clipped onto the constant velocity joints on the wheel side of the transmission, and are supplied together with the joints.

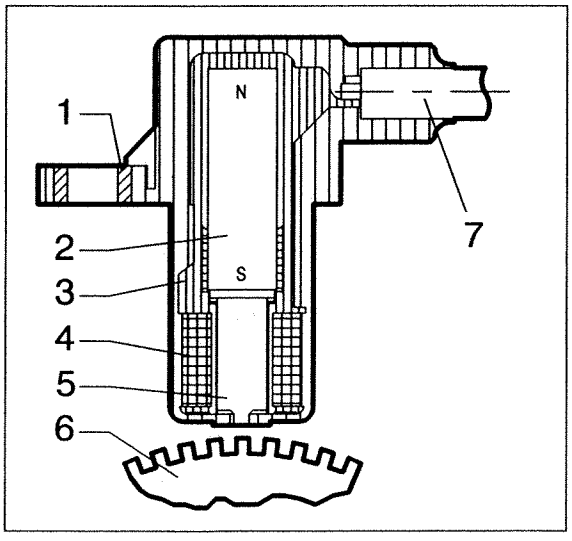

P3U008D02

1. Brass bush
2. Permanent magnet
3. Sensor's plastic casing
4. Coil

Front wheel speed sensor

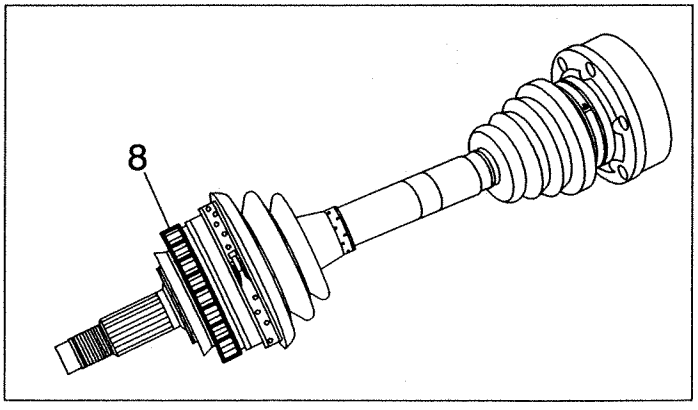

P3U008D03

5. Polar core
6. Toothed wheel or phonic wheel
7. Coaxial twin cable or electrical connection
8. Position of phonic wheel for front wheel

The sensor's internal components (coil and permanent magnet) are fully immersed in a protective resin and further wrapped in a plastic body. A brass bush fitted in the sensor body secures the sensor without creating deformations.
In addition to being better manufactured in comparison to the previous types, the new speed sensor (DF6) offers better operation.

Operation of front sensors

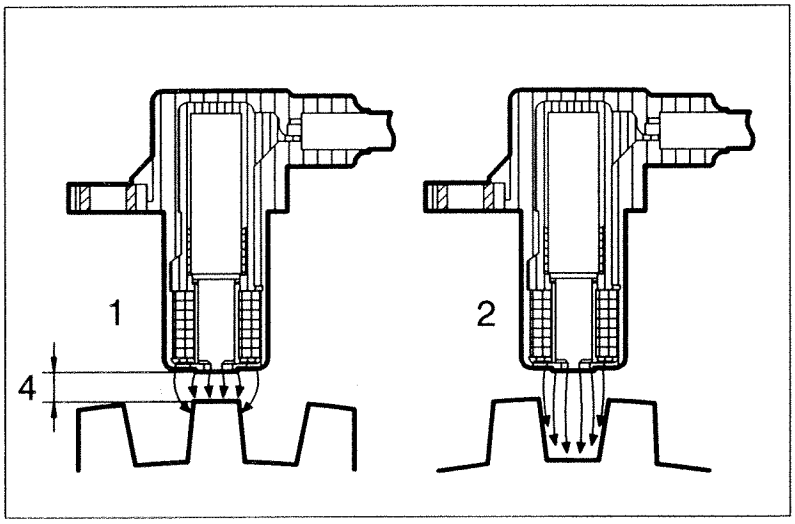

P3U009D01

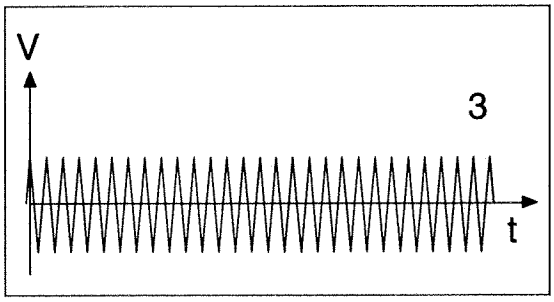

P3U009D02

1. Maximum magnetic flow
2. Minimum magnetic flow
3. Trend of induced alternating voltage
4. Gap 0.55-1.3 mm

NOTE *The sensor resistance is 1600 ± 100 Ω*

The front sensors continuously supply to the electronic control unit half of the useful information for correctly driving the electrohydraulic control unit.
The signals are obtained from magnetic flow lines which close through the teeth of an iron toothed wheel opposite the sensor and rotating with the wheel.
The passage from full to empty, owing to the presence or absence of the tooth, causes a change in the magnetic flow which is sufficient to generate an induced alternating voltage, resulting from the count of teeth located on a ring (or phonic wheel). The frequency and amplitude of the voltage sent to the electronic control unit informs the latter of the of the front wheel speeds.
The specified gap for obtaining correct signals between the end of the sensor and the phonic wheel must be between:

gap = 0.55 - 1.3 mm

This gap is not adjustable, so if it is outside the tolerance limits, check the condition of the sensor and phonic wheel.

If one or more phonic wheels break or become deformed, so causing a difference in speed of 25% in relation to the reference speed, the electronic control unit switches off the device and the fault warning light comes on. The time for detecting the fault is about 120 seconds with a vehicle speed of over 6 km/h.

NOTE *Whenever a speed sensor is fitted, it should be smeared with water-repellent grease in order to avoid temperature changes causing it to break up as a result of difficulties in removal.*

Copyright Fiat Auto

SKF rear sensors

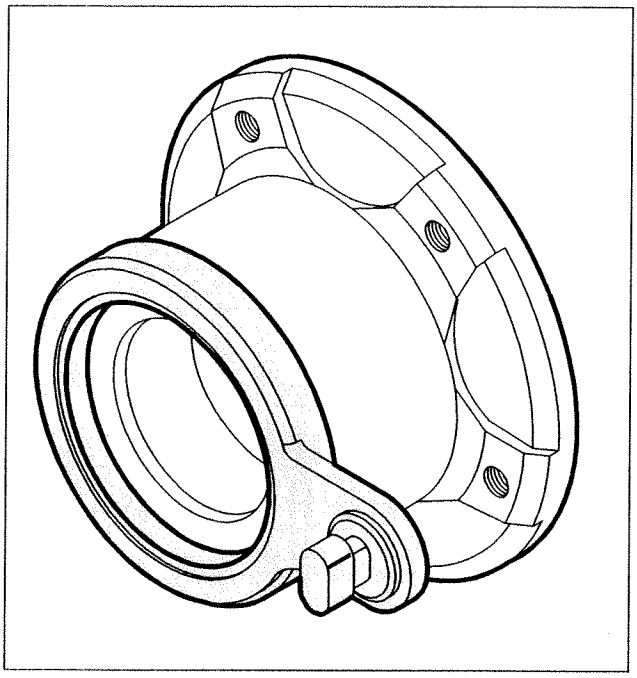

P3U010D01

The new design rear sensors are built into the rear wheel hub bearings.

The design of the bearing has been developed and now includes a new function, that of measuring the speed of rotation. Thus a new type of bearing has been created, called **speed measuring bearing or instrumented bearing**.

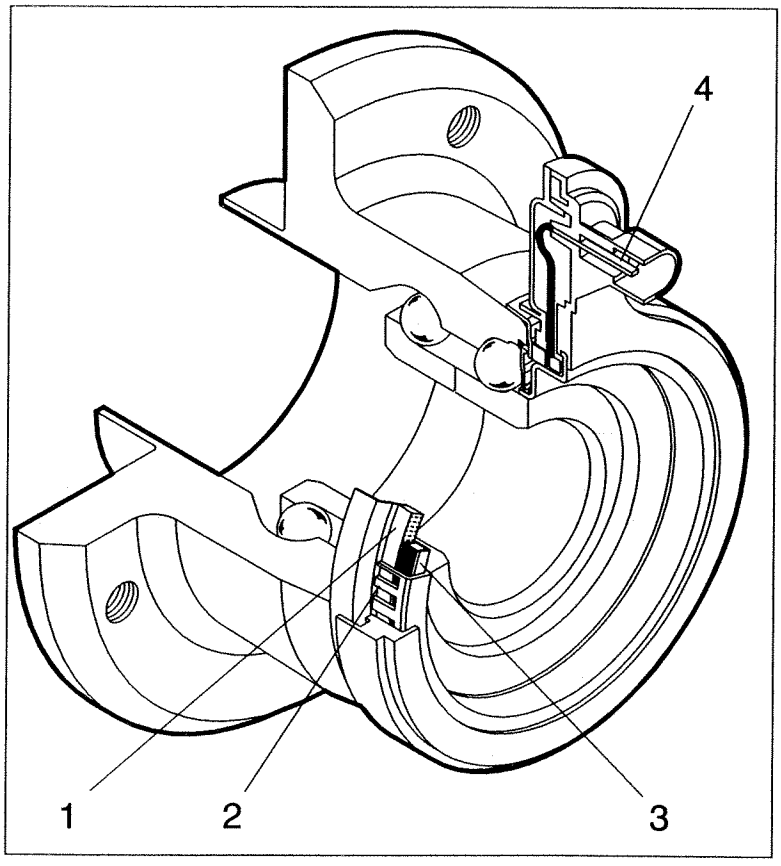

P3U010D02

Instrumented bearing

The instrumented bearing contains an inductive sensor which comprises the following components:
- a multi-pole magnetized ring (1) secured to the bearing outer race;
- an annular copper winding (3) or coil, located between the multi-pole magnetized ring (1) and the toothed circular strip (2);
- a toothed circular strip (2) with 44 teeth, for concentrating the magnetic flow which covers both the coil (3) and the multi-pole ring (1);
- a connector (4) crossing through the brake disc, to which a coaxial twin cable is connected;
- a coaxial twin cable fitted with two connectors, one is compatible with the connector (4) to which it must be connected, and the other is compatible with the connector of the system's wiring loom; the cable has clips for attachment to the bodywork and grommets for passing through panels.

1. Multi-pole magnetized ring
2. Toothed circular strip for concentrating the magnetic flow (44 teeth)
3. Annular coil or winding
4. Connector for coaxial twin cable

Operation of rear sensors

The rear sensors continuously supply to the electronic control unit the rest of the useful information for correctly driving the electrohydraulic control unit.
The voltage signals produced are due to the presence of a multi-pole magnetized ring (1) which rotates in union with the bearing's outer race.

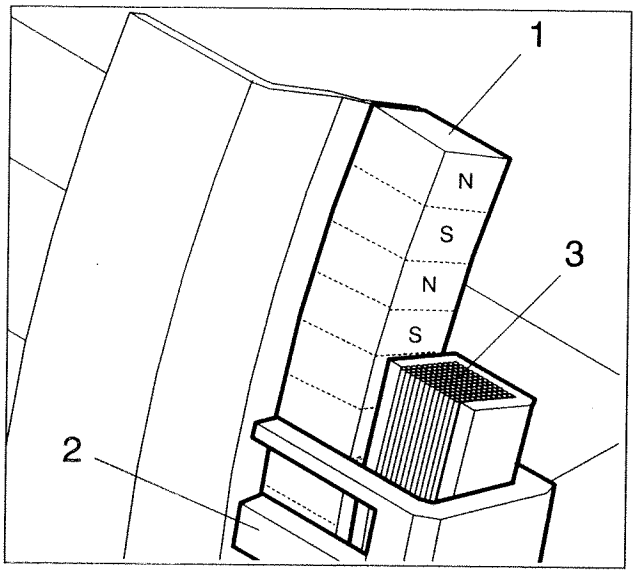

P3U011D01

The multi-pole magnetized ring (1) is an elastomer containing a certain amount of magnetic particles which, by means of a special magnetization technique, are orientated in such a way as to form several magnets with alternating North and South polarity, around the circumference.
The fixed part of the bearing also contains: a toothed circular strip (2) for concentrating the magnetic flow, which covers the multi-pole ring (1) and coil (3).

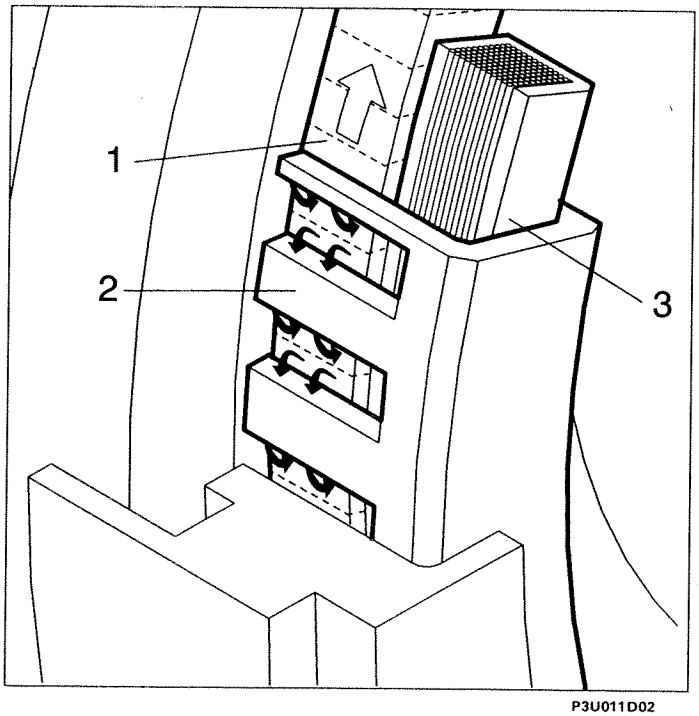

P3U011D02

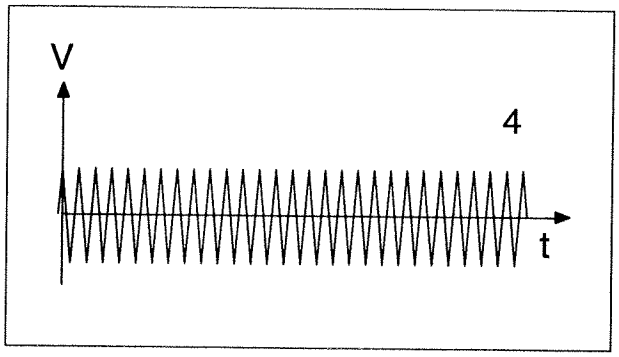

P3U011D03

1. Multi-pole magnetized ring
2. Toothed circular strip for concentrating the magnetic flow (44 teeth)
3. Winding or coil
4. Trend of the induced alternating voltage

The relative motion between the multipole ring (1) and the toothed circular strip (2) with its solid spaces and gaps causes a variation in magnetic flow sufficient to generate alternating induced voltages (4) whose frequency and amplitude inform the electronic control unit of the rear wheel speeds. In comparison to other sensors, this new type of sensor has a lower peak error and at low speeds can generate a signal which is free from interference and so more easily used.

The specified gap for obtaining correct signals between the magnetized ring and the toothed circular strip is established when the hub components are assembled. This distance is not adjustable.

Copyright Fiat Auto

ABS FAULT WARNING LIGHT

With the ignition ON, the red ABS fault warning light (A), comes on.

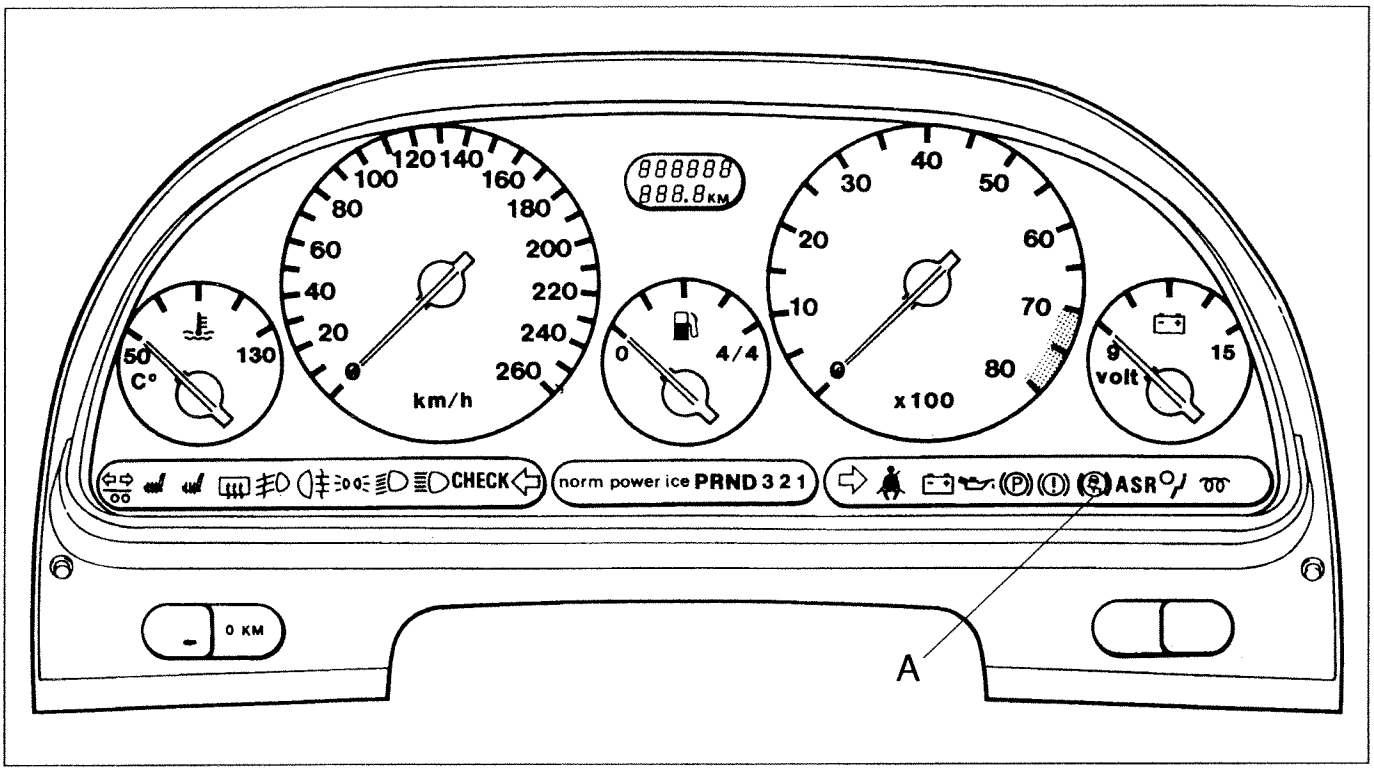

P3U012D01

The warning light (A) goes out after about 2 seconds, provided the system has not detected any faults.

If the warning light (A) stays on, this means that one or more components of the ABS system are faulty. Under these conditions, the ABS is disabled and so braking only takes place in a conventional manner.

If the warning light (A) does not come on (with the ignition on), the fault should be sought in the warning light bulb, the electrical connection between the ignition switch and the warning light or in the connection on the control unit (pin 40).
At about 3 km/h the ABS system is switched on.
At a driving speed of about 6 km/h, the system test cycle commences. If the responses of the system's components are positive, the warning light stays off. In the case of a negative response, the warning light comes on and the ABS system is de-activated automatically. Braking takes place conventionally.
Under low battery charge conditions, the warning light can come on with the exclusion of the ABS, for example during urban driving at the lowest speeds, with all the electrical devices switched on.

After the vehicle has stopped with the engine running (for example at traffic lights), after the speed of 24 km/h is exceeded, the entire test cycle is repeated except for the electrical circuit of the recycling pump, which has already been tested at the 1st start-up.

Under *aquaplaning* conditions, the control unit detects the abnormal situation from the vehicle's normal, unbraked driving. Under these conditions, the driving wheels tend to rotate faster than the vehicle speed, while the driven wheels are slower.
This would lead to the control unit issuing an inappropriate command.
Under these conditions, the A.B.S. is temporarily switched off without the warning light necessarily coming on, because of the brevity of the phenomenon. The efficacy of the ABS system is automatically restored as soon as the *aquaplaning* ceases.

DESCRIPTION OF OPERATION OF THE ANTI-LOCK BRAKING SYSTEM

Rest position

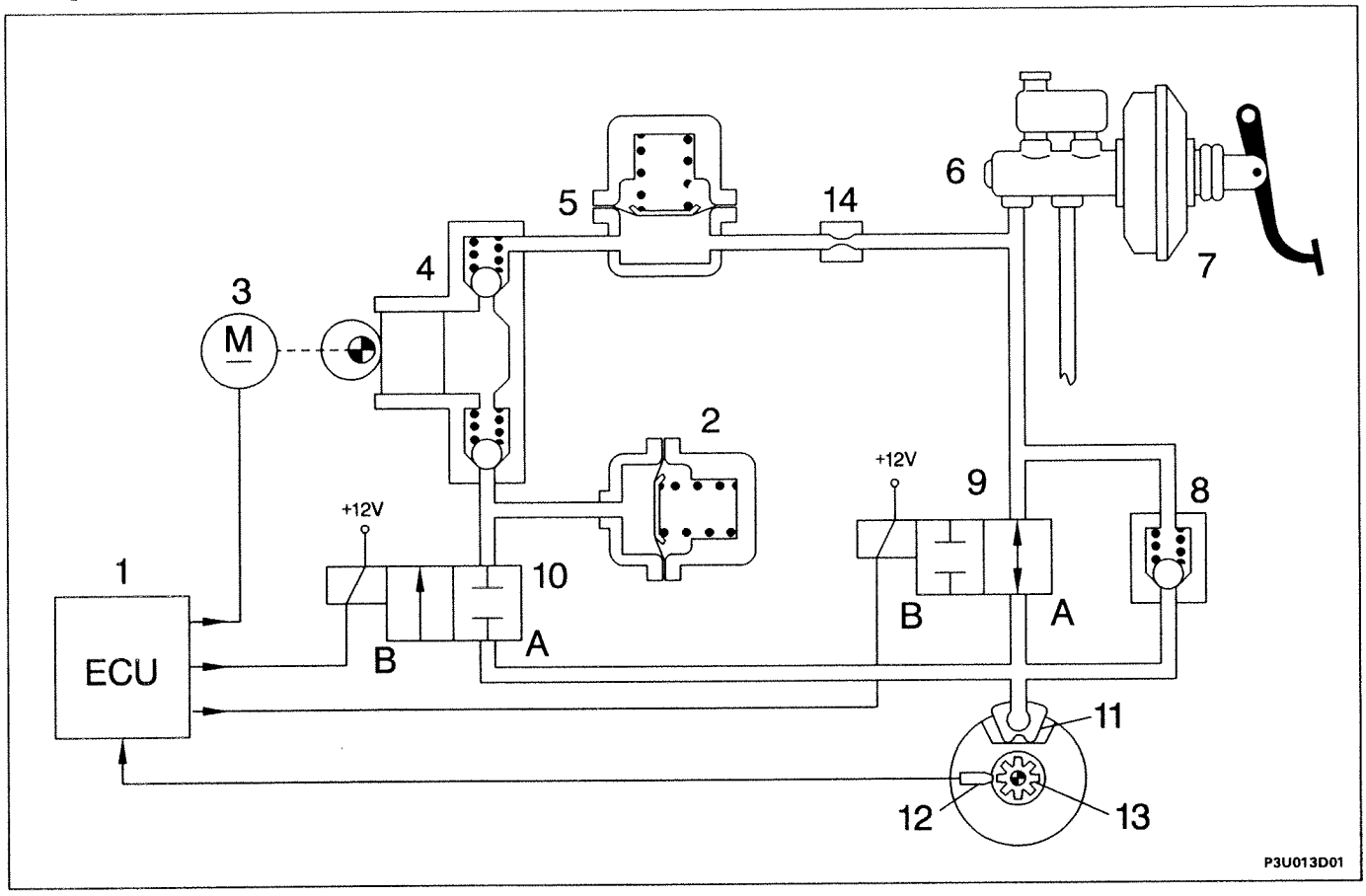

1. Electronic control unit
2. Low-pressure accumulator (reservoir)
3. Recycling pump motor
4. Recycling pump
5. High-pressure accumulator (damping chamber)
6. Brake pump
7. Servo unit
8. Rapid pressure reducing valve
9. Input solenoid (A) open (B) closed
10. Output solenoid (A) closed (B) open
11. Brake caliper
12. Speed sensor
13. Phonic wheel
14. Constriction

On the Bosch 5.0 ABS, there are two two-way solenoids for each hydraulic circuit.

When the input solenoid (9) is de-activated (not earthed by the control unit), it is in the open position, thus allowing fluid to pass to the brake caliper.

The pressure is maintained by closing this valve, i.e. by supplying it electrically.

When the output solenoid (10) is de-activated (not earthed by the control unit), it is in the closed position, and it does not allow fluid to discharge into the low-pressure accumulator (2).

The accumulators (2) and (5) temporarily store the brake fluid which is made available during the pressure reduction stage.

The accelerator pump (4) sends the brake fluid which flows out of the brake calipers, during the pressure reduction stage, to the brake pump through the relevant accumulator.

Copyright Fiat Auto

33.

On the basis of the signals received from the front and rear wheel speed sensors, the electronic control unit drives the electrohydraulic control unit which in turn varies the pressure of the brake fluid sent to the calipers in accordance with three stages: increase, maintenance or reduction of the pressure.

Pressure increase stage

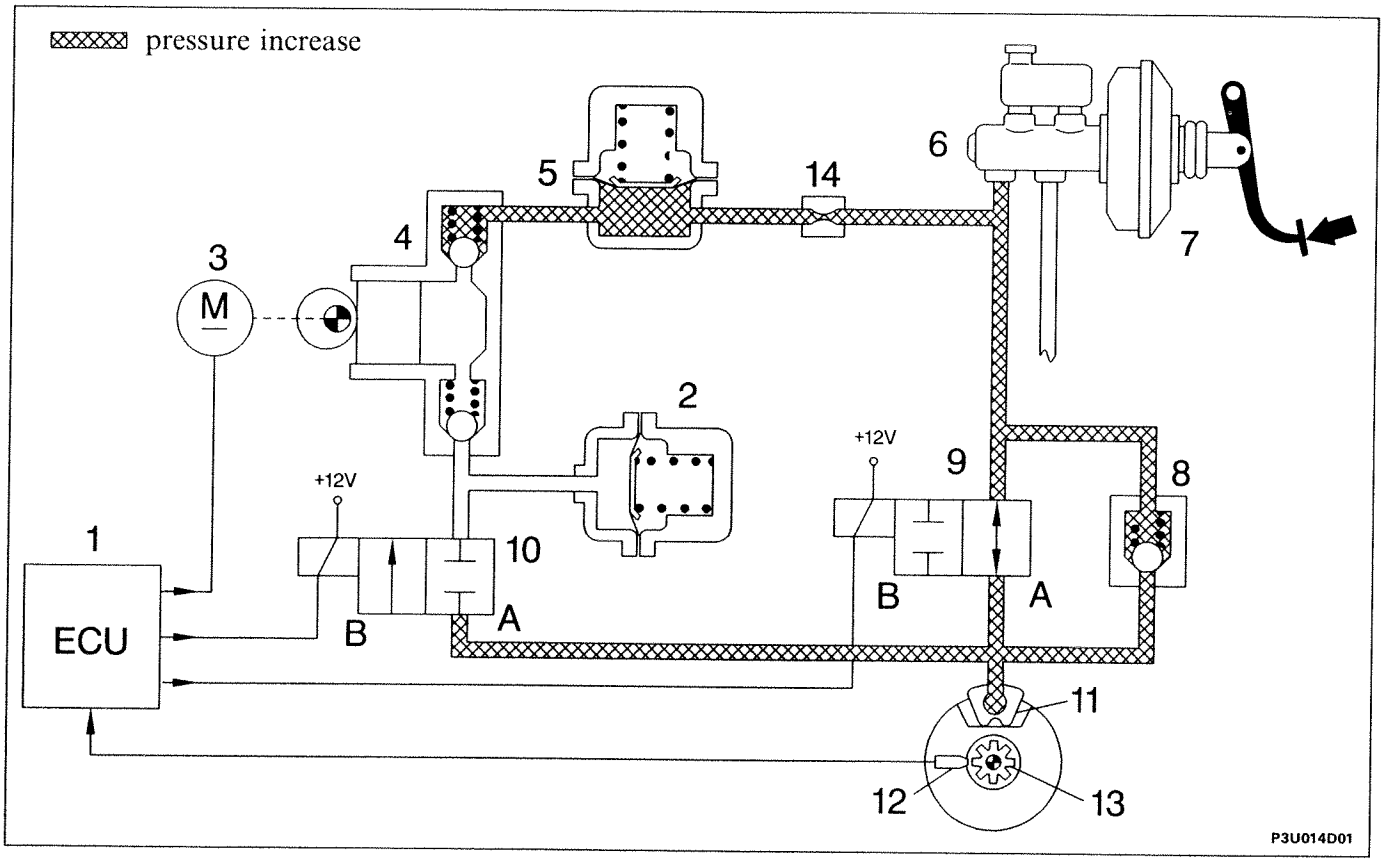

1. Electronic control unit
2. Low-pressure control unit (reservoir)
3. Recycling pump motor
4. Recycling pump
5. High-pressure accumulator (damping chamber)
6. Brake pump
7. Servo unit
8. Rapid pressure reducing valve
9. Input solenoid (A) open (B) closed
10. Ouput solenoid (A) closed (B) open
11. Brake caliper
12. Wheel speed sensor
13. Phonic wheel
14. Constriction

When the vehicle's driver presses the brake pedal, the pressure generated by the brake pump (6) reaches the brake calipers without undergoing changes, since the solenoids (9) and (10) of the hydraulic unit are not earthed by the electronic control unit.

When the braking force increases, the wheel deceleration increases: this causes faster deceleration of the car (i.e. the wheel creep increases).
The creep value must not exceed a particular value beyond which the wheel loses grip with the ground and begins to drag, losing its directionality characteristics and lengthening braking distances.

The wheel speed sensor (12) indicates when deceleration values are such as to impair the wheel's grip with the ground have been reached: at this point, the electronic control unit (1) drives the solenoids of the hydraulic control unit, reducing the braking force and enabling the wheel to increase its speed and regain its grip.

Pressure maintenance stage

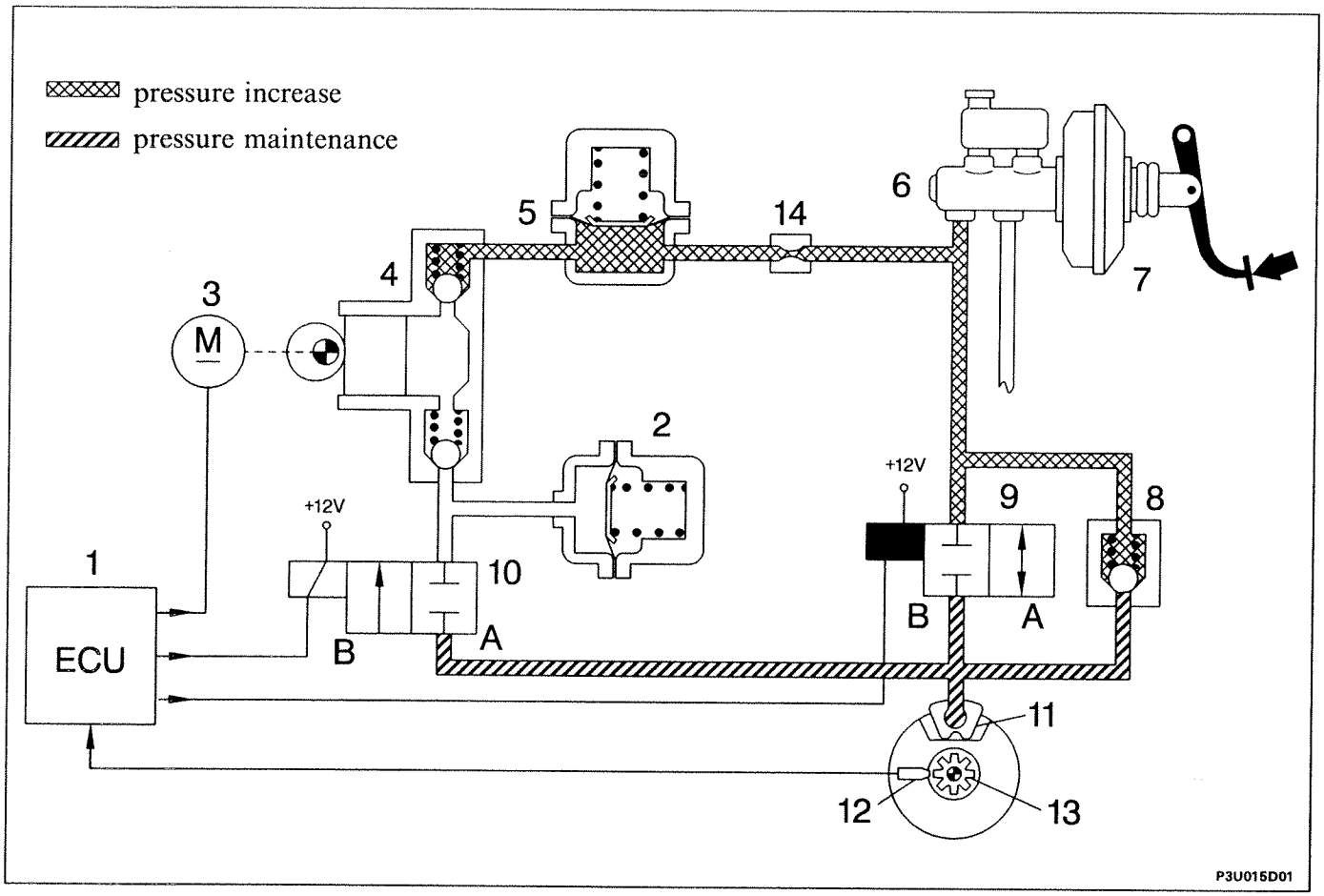

1. Electronic control unit
2. Low-pressure accumulator (reservoir)
3. Recycling pump motor
4. Recycling pump
5. High-pressure accumulator (damping chamber)
6. Brake pump
7. Servo unit
8. Rapid pressure reducing valve
9. Input solenoid (A) closed (B) open
10. Output solenoid (A) closed (B) open
11. Brake caliper
12. Wheel speed sensor
13. Phonic wheel
14. Constriction

In this stage, the electronic control unit (1) earthes the input solenoid (9), which closes, while the output solenoid (10) is already closed, not being earthed.

The hydraulic connection between the brake pump (6) and brake caliper (11) is interrupted (wait position). The pressure in the brake caliper (11) is kept constant at the value reached previously, whatever the pressure on the brake pedal.

Although the braking force maintains a continuous slowing-down action, the wheel's speed changes in relation to the grip with the ground, until the signal from the speed sensor (12) detects a value comparable to the reference speed calculated by the electronic control unit (1).
At this point the control unit moves from the maintenance stage to the pressure increase stage (if the wheel is accelerating) or pressure reduction stage (if the wheel is locking).

Copyright Fiat Auto

Pressure reduction stage

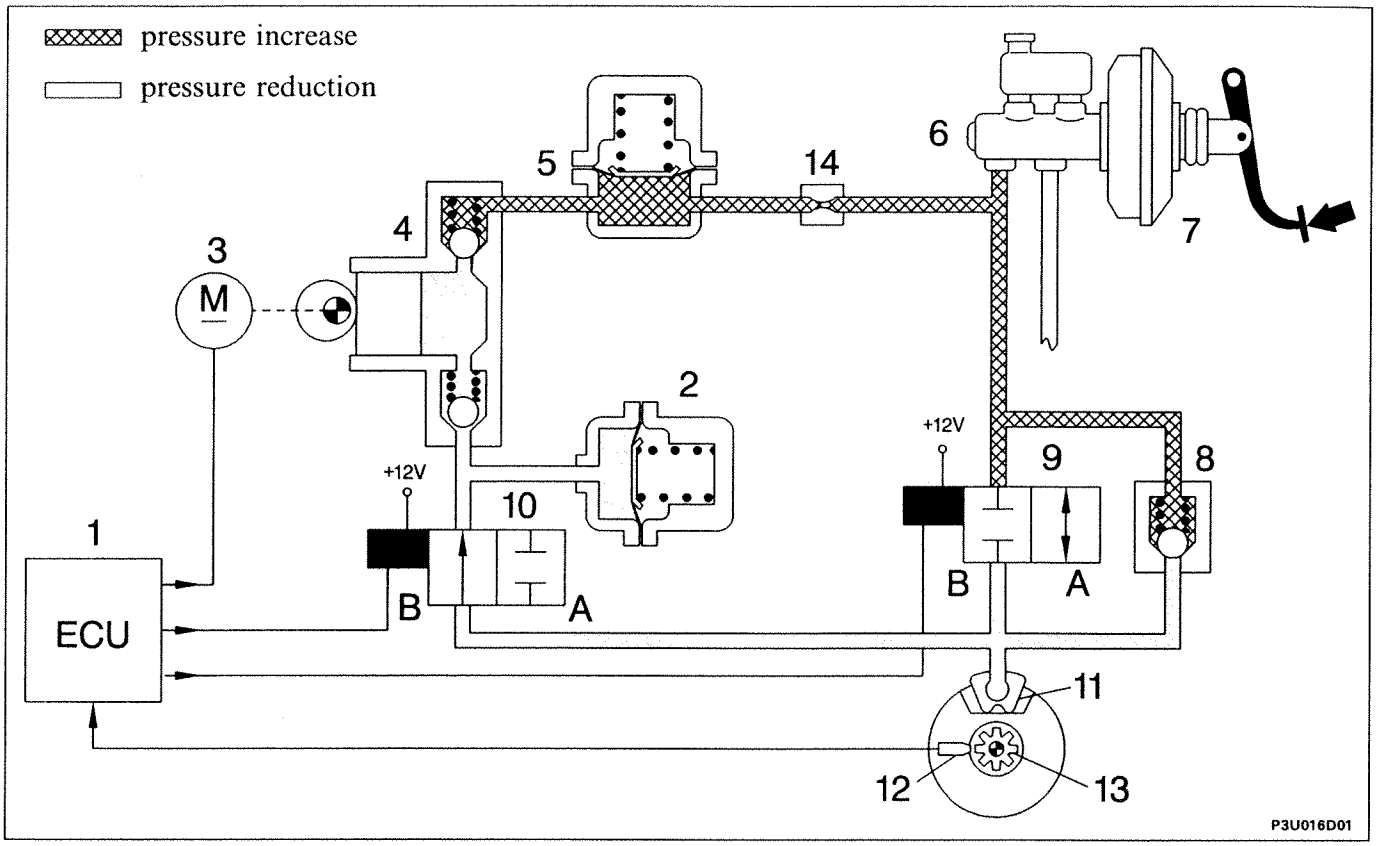

1. Electronic control unit
2. Low-pressure accumulator (reservoir)
3. Recycling pump motor
4. Recycling pump
5. High-pressure accumulator (damping chamber)
6. Brake pump
7. Servo unit
8. Rapid pressure reducing valve
9. Input solenoid (A) closed (B) open
10. Output solenoid (A) open (B) closed
11. Brake caliper
12. Wheel speed sensor
13. Phonic wheel
14. Constriction

The electronic control unit (1) detects the wheel's tendency to lock and activates the hydraulic control unit to limit the wheel's deceleration within the permitted threshold values.

The electronic control unit (1) earths the input solenoid (9) and output solenoid (10).
The input solenoid (9) remains closed, keeping the connection between brake pump (6) and brake caliper (11) broken; the output solenoid (10) opens, hydraulically connecting the brake caliper (11) with the low-pressure accumulator (2) and recycling pump (4), in order to take some fluid away from the brake caliper (11) and reduce the pressure on the caliper.
At the same time the electronic control unit (1) supplies the motor (3) which drives the recycling pump (4). This allows the fluid taken from the brake caliper (11) to be returned to the main circuit.

The accumulator (2) or low-pressure reservoir in the circuit stores some of the brake fluid taken from the calipers. Through the circuit of the recycling pump (4), the brake fluid is drawn in and sent, via the damping chamber (5) and constriction, into the main circuit of the brake pump (6).
In this stage, a series of pressure waves (or hydraulic thrusts) is generated, and these are attenuated by the presence of the damping chamber (5) and constriction (14).

During braking, slight pushes on the brake pedal should be considered normal during intervention of the ABS. In this stage, because of the reduction of the braking force, the wheel tends to conform to the reference speed calculated by the electronic control unit (1).

The type of braking is intermittent or in steps. The sequence of stages is dictated by the rolling conditions of the braked wheels, and follows a repetitive cycle of jerks which is not perceived by the driver, because of its rapidity and frequency and also because it is regulated by the inertia of the wheel which, in relation to the rapidity of intervention of the devices, prevents the wheel from reaching extreme skidding coefficients.

On a vehicle without ABS, the driver can intervene intermittently on the brake pedal with a frequency of 2 cycles per second (2 depressions and 2 releases).
With ABS, the cycles increase to 4 - 10 per second (depending on the grip).
Normally the intervention of the ABS ceases at speeds of below 2.75 km/h to permit full locking of the wheels when the vehicle is at a standstill.

NOTE *The recycling pump is of the double-circuit free piston type, driven by an electric motor which is always turning during the recycling stages.*
The pistons are not connected to the electric motor, but are moved along their travel by the cam only when the brake fluid arrives. The pump can therefore carry out only one pressing travel, while the suction travel is not possible because there is no mechanical connection between motor and pump.

Release of the brake pedal

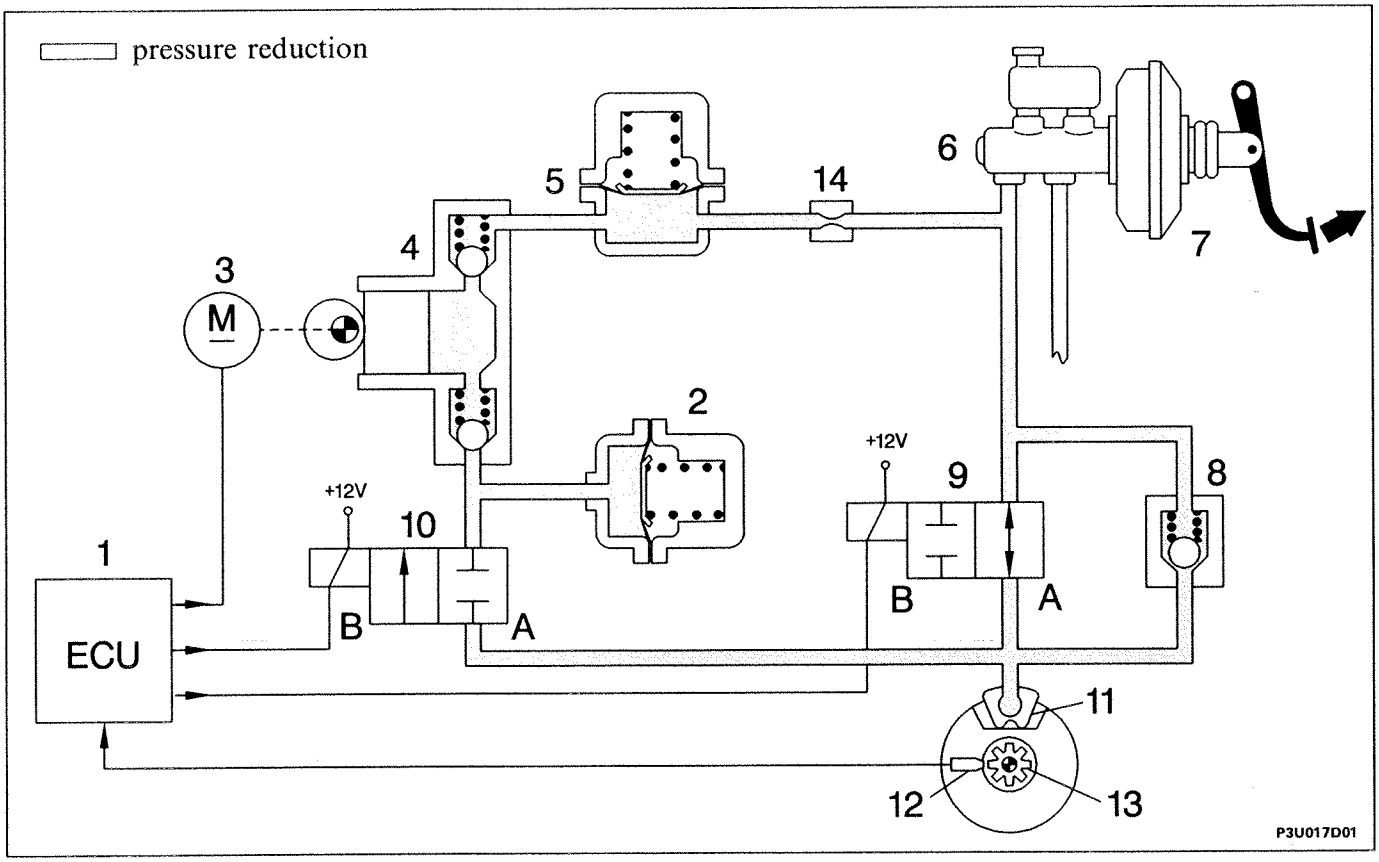

1. Electronic control unit
2. Low-pressure accumulator (reservoir)
3. Recycling pump motor
4. Recycling pump
5. High-pressure accumulator (damping chamber)
6. Brake pump
7. Servo unit
8. Rapid pressure reducing valve
9. Input solenoid (A) open (B) closed
10. Output solenoid (A) closed (B) open
11. Brake caliper
12. Wheel speed sensor
13. Phonic wheel
14. Constriction

To permit a rapid reduction of pressure on the brake caliper (11) when the brake pedal is released, the system has a non-return valve (8) situated in parallel with the input solenoid (9).

Copyright Fiat Auto

DIAGRAM OF BOSCH 5.0 ABS HYDRAULIC SYSTEM

Diagonal connections of the brake calipers

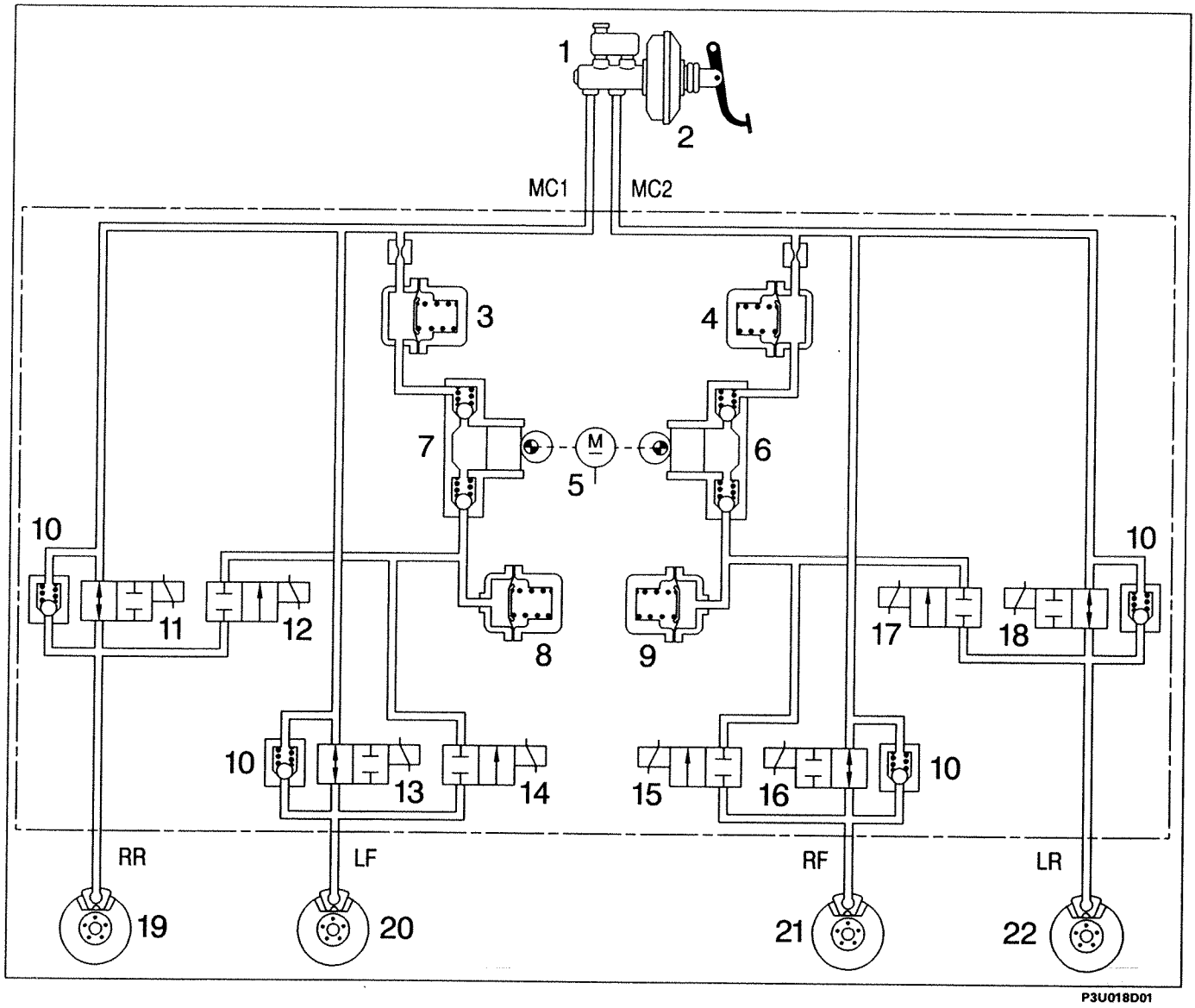

1. Brake pump
2. Servo unit
3. High-pressure accumulator (damping chamber)
4. High-pressure accumulator (damping chamber)
5. Recycling pump motor
6. Recycling pump
7. Recycling pump
8. Low-pressure accumulator (reservoir)
9. Low-pressure accumulator (reservoir)
10. Rapid pressure reducing valve
11. Rear right input solenoid
12. Rear right output solenoid
13. Front left input solenoid
14. Front left output solenoid
15. Front right input solenoid
16. Front right output solenoid
17. Rear left input solenoid
18. Rear left output solenoid
19. Rear right brake caliper
20. Front left brake caliper
21. Front right brake caliper
22. Rear left brake caliper

MC1. Supply connection for brake pump 1st stage
MC2. Supply connection for brake pump 2nd stage

RR. Delivery connection to rear right brake caliper
FL. Delivery connection to front left brake caliper
FR. Delivery connection to front right brake caliper
RL. Delivery connection to rear left brake caliper

ELECTRICAL SYSTEM OF THE BOSCH 5.0 ABS

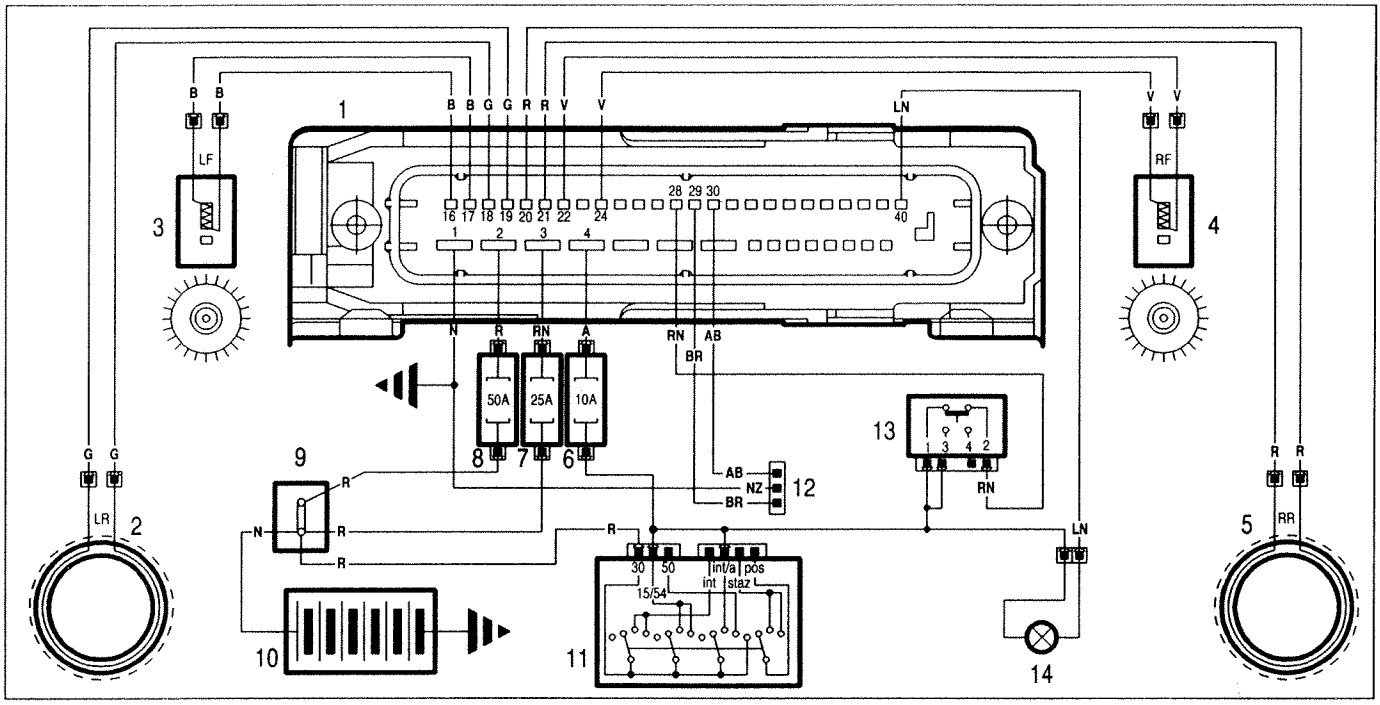

1. Electronic control unit
2. Rear left wheel speed sensor (RL)
3. Front left wheel speed sensor (FL)
4. Front right wheel speed sensor (FR)
5. Rear right wheel speed sensor (RR)
6. 10A fuse
7. 25A fuse
8. 50A fuse
9. Positive connection block
10. Battery
11. Ignition switch
12. Diagnostic socket
13. Stop lights switch
14. ABS warning light

The electrical system of the Bosch 5.0 ABS is specific; the electrical connections between the individual components, such as the four wheel speed sensors, the fault warning light, stop lights switch, diagnostic socket, supplies, etc. are combined to form a wiring loom comprising a 40-pin connector, of which 16 pins are used. The installation of this wiring loom is protected from water, since the presence of oxidation or corrosion can give rise to high contact resistance; in some cables, there may be an excessive voltage drop (in comparison to the electronic control unit). This may be such as to cause the malfunctioning of the entire system and so its early exclusion, or operating limitations of the electromagnetic valves and the recycling pump, which lead to prolonged changeover times and lower flow rate.
The electronic control unit (1) is supplied directly from the battery (9) via two fuses, one 50A (8) and the other 25A (7) on the terminals (2) and (3), and from the ignition switch (10) through the 10A fuse (6) on the pin (4). The earth is connected to the pin (1).
The relays are built into the electronics, so they cannot be replaced and their operation is guaranteed. One supplies the eight solenoids in accordance with the microprocessors' commands, and the other supplies the recycling pump, again in accordance with microprocessor commands.
The circuit of the switch on the brake pedal is closed on the control unit via the connection (28) when the brake pedal is pressed; this connection is used by the electronic control unit to control braking under particular conditions. It is not essential, so a false connection does not impair the efficiency of the system; for this reason it is not indicated by the warning light coming on.
The red fault warning light, located on the instrument panel, is supplied by the ignition key and is earthed on the control unit's pin (40). It stays on following a microprocessor instruction if a fault is detected, in order to indicate to the user that under these conditions the ABS is disabled and so braking will only take place in the conventional manner.
The system also has a diagnostic socket for connection diagnostic instruments, such as the Fiat-Lancia Tester or the Computerized Diagnosis Station.

Copyright Fiat Auto

FAULT DIAGNOSIS

Faults in components of the Bosch 5.0 ABS can be sought and identified using the Fiat-Lancia Tester with the M41A module or the Computerized Diagnosis Station.

To use the Fiat-Lancia Tester correctly, it is essential to insert the ADT 101A adaptor as an interface.

The M41A module contains programs relating to:

1. Parameters displayed
2. Errors displayed
3. Active diagnosis

Details of fault diagnosis

1. When the Fiat-Lancia Tester is connected, the ABS is disabled and the fault warning light stays on. Under these conditions, the control unit is not able to detect new errors; the use of the Fiat-Lancia Tester while driving is only useful for analysing the wheel speeds but not for seeking any malfunctions. Under these conditions, being disabled, the ABS will not intervene in the case of emergency braking.
2. If the control unit detects a fault, the system is disabled and the fault warning light comes on. This fault is recorded in a permanent memory, and the error is automatically deleted by the Fiat-Lancia Tester at the end of guided diagnosis ("ERROR DELETION" cannot be requested manually) or automatically after 20 start-ups.
3. The diagnostic program does not allow errors to be masked, since fault diagnosis must be carried out in the order in which the Fiat-Lancia Tester displays the faults.
4. If two simultaneous errors are presented, the control unit is able to store only one in memory.

INSTRUCTIONS TO BE OBSERVED FOR VEHICLES FITTED WITH ANTI-LOCK BRAKING SYSTEM

Before undertaking any electric arc welding work, disconnect the electronic control unit's connector.

If the battery is removed, when it is refitted, the terminals must be fully tightened.

To replace the electronic control unit, the entire hydraulic unit must be dismantled for reasons of space and in order not to damage the internal connector.

The battery's negative cable must be disconnected before the electrohydraulic control unit is dismantled.

Whenever the hydraulic unit, speed sensors, electronic control unit or wiring are replaced (especially after an accident), the entire ABS must be checked with the Fiat-Lancia Tester.

After any repair work on the ABS hydraulic system or the braking system, the system must be filled with DOT 4 brake fluid and bled, and all the connections must be checked for leaks.

The electrohydraulic control unit is supplied filled with DOT 4 brake fluid and with the solenoids not supplied. The procedure for bleeding and filling the braking system is the same as for a conventional braking system, although it takes longer.

Check that the pipes are not in contact with the bodywork at any point, in order to avoid not only the risk of damage to the pipes' protection, but also the transmission of noise during operation of the ABS.
If it is necessary to remove and refit the connecting pipes, leaks tests must be conducted on the ABS.



Do not put mineral oil in the brake circuit, since all the seals would be damaged.
If mineral oil is accidentally used, the following is necessary:
- *hydraulic unit,*
- *brake pump,*
- *calipers.*

INSTRUCTIONS TO BE OBSERVED DURING REPAIRS INVOLVING COMPONENTS OF THE ANTI-LOCK BRAKING SYSTEM

After any repair involving the electrical system of the anti-lock braking system or the wheel speed sensors, either during specific repairs or during dismantling and refitting of mechanical parts (for example spring-shock absorber assembly, constant velocity joints, drive shafts and wheel hubs), a very short road test must be performed as follows:

1. Increase the vehicle's speed to over 12 km/h and maintain this speed, in order to allow the electronic control unit to carry out a dynamic check on the sensors and detect any faults, insecure contacts, incorrect positions or absence of a phonic wheel.
2. After carrying out the above operation, if no fault is indicated by the fault warning light, continue the test at a speed of 50 - 60 km/h for a period of 10 minutes, using the brakes normally although avoiding sudden braking. This check stage enables the electronic control unit to recognize the presence of an inappropriate phonic wheel.

Copyright Fiat Auto

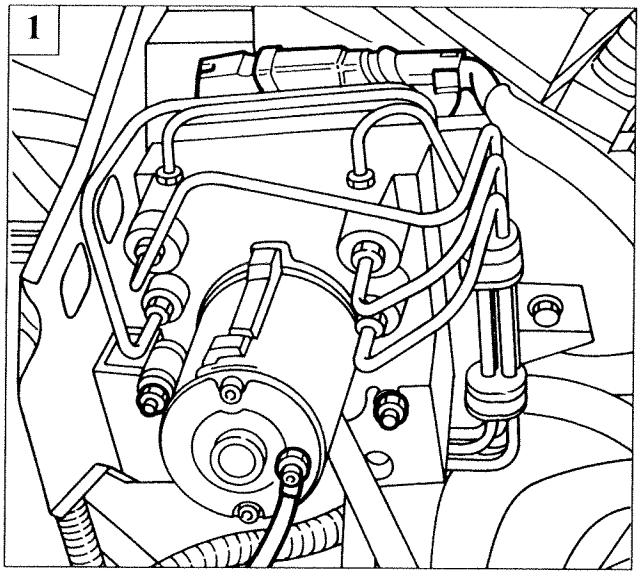

P3U022D01

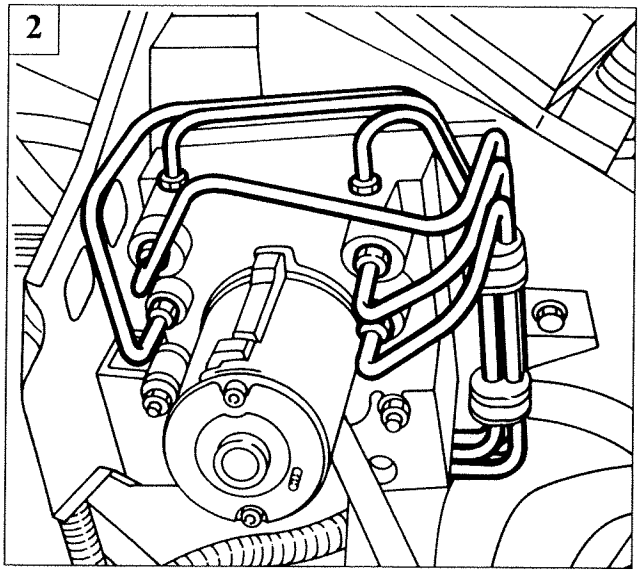

P3U022D02

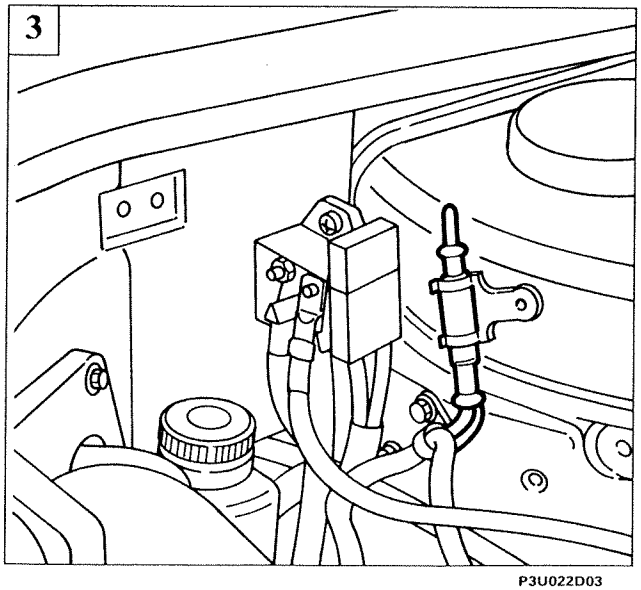

P3U022D03

REMOVING-REFITTING COMPONENTS OF THE ANTI-LOCK BRAKING SYSTEM

Electrohydraulic control unit

1. Disconnect the connector from the electronic control unit, undo the nuts securing the earth cable and the hydraulic control unit to the mounting bracket (one nut is not visible);
2. using tool 1856132000, undo the unions on the pipes coming from the pump (MC1 and MC2) and going to the four brake calipers (LR, RF, RR and LF), then remove the hydraulic control unit.

Front wheel speed sensors

3. Disconnect the speed sensor connector;
4. undo the bolt securing the sensor to the front vertical link and remove the sensor.

NOTE *The gap is not adjustable since adjustment shims are not provided, so if the gap is outside the specified tolerance, check the condition of the sensor and teeth on the phonic wheel.*

Before refitting, smear water-repellent grease on the sensor.

Rear wheel speed sensor

The rear wheel speed sensor is built into the bearing and the rear hub.
To remove and refit the rear sensor, carry out the procedure described in Section 44 for removing the rear hub.

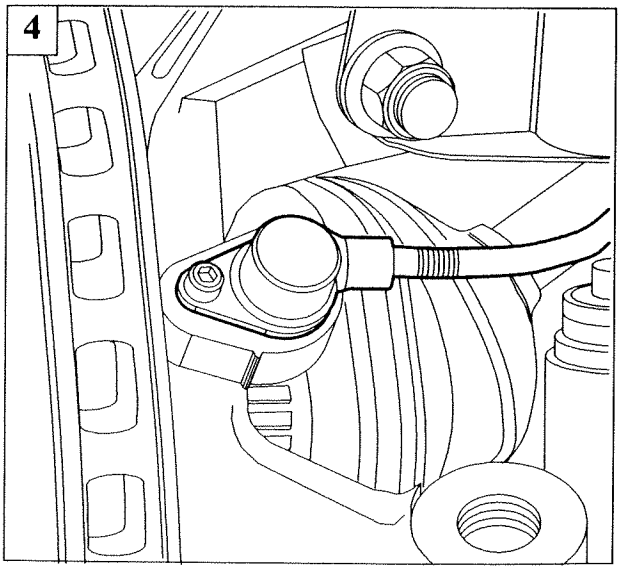

P3U022D04

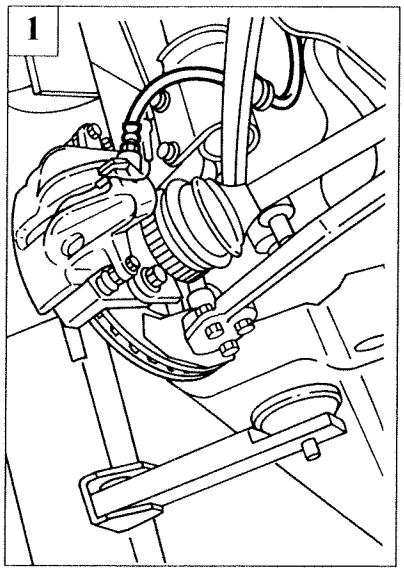

P3U023D01

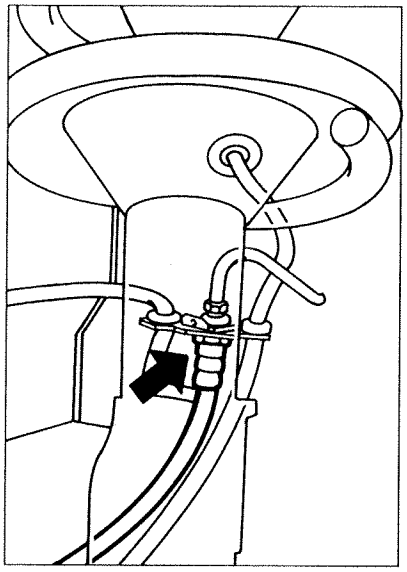

P3U023D02

REMOVING-REFITTING

Remove the braking system components as described below:

1. undo the hose using tool 1856132000 on the unions, and disconnect the rubber attachment on the shock absorber;

NOTE *The hose must not be swollen or cracked, otherwise it will have to be replaced.*

When fitting the hose, check that the rubber attachment is positioned correctly so that the hose does not come into contact with the wheelarch or with mechanical parts of the vehicle, whatever the steering or travel conditions of the wheels.

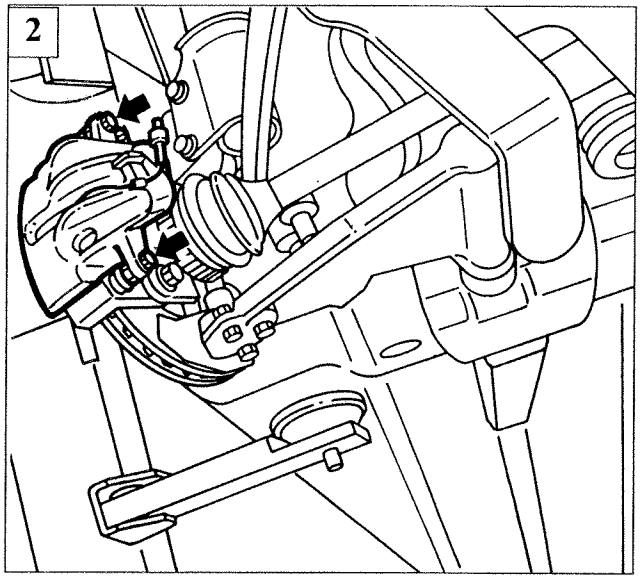

P3U023D03

2. disconnect the brake pad wear sensor, undo the bolts securing the brake caliper and remove the caliper;

The caliper case bolts are self-locking and should always be replaced whenever they are slackened or removed.

3. remove the brake pads;
4. undo the bolts securing the caliper mounting bracket and remove it;

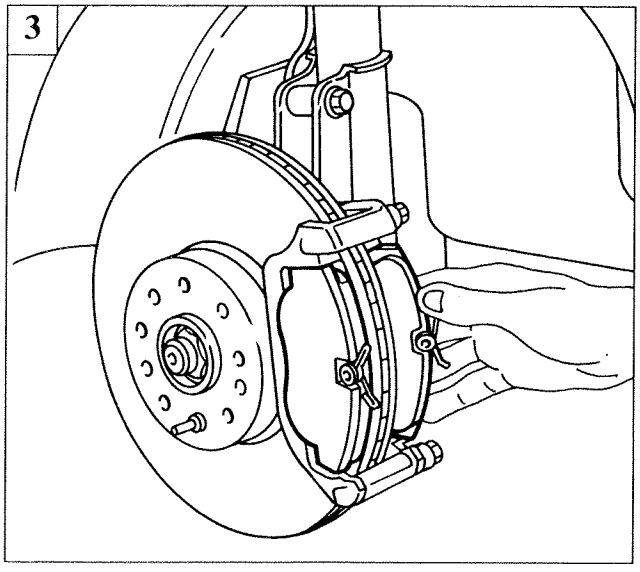

P3U023D04

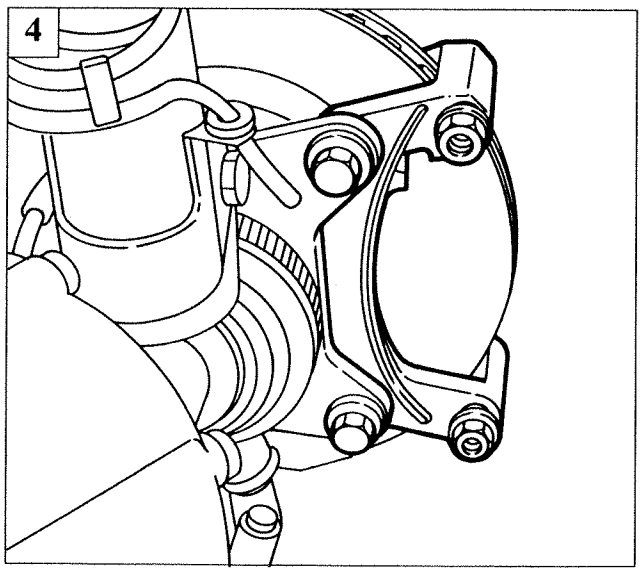

P3U023D05

Copyright Fiat Auto

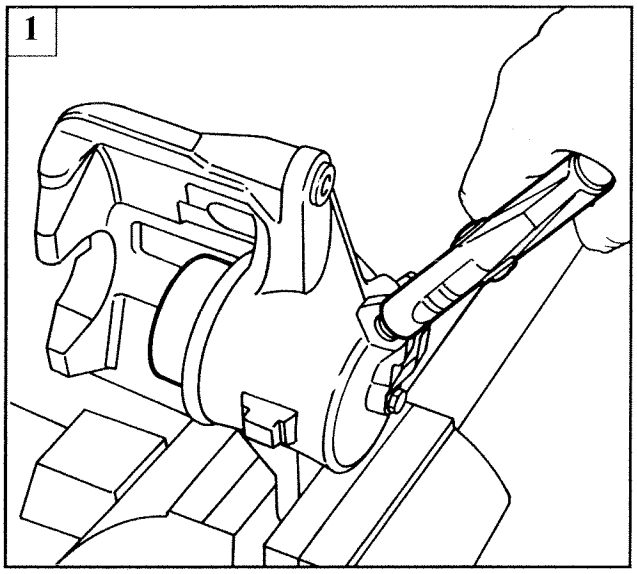

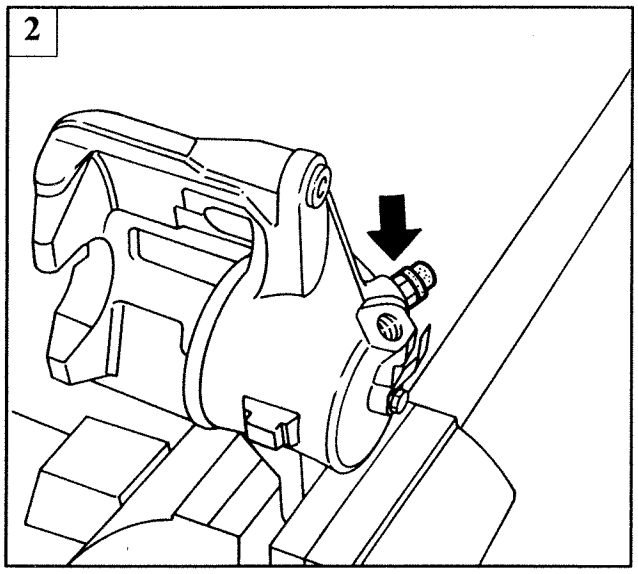

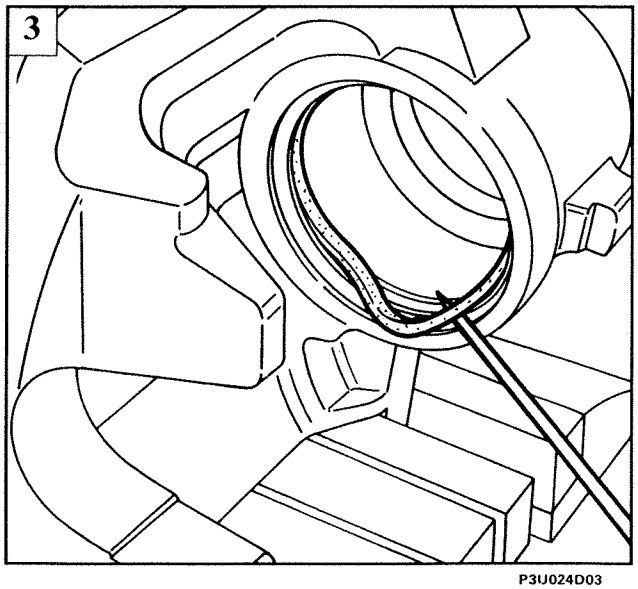

BRAKE CALIPER

Dismantling-reassembly

Place the caliper in a vice, using protections, then proceed as follows:

1. direct a jet of compressed air into the brake fluid inlet hole in order to dismantle the piston from the caliper case;
2. undo the air bleed screw and remove it;
3. remove the seal;
4. check the components; the piston and caliper case must not show signs of friction or seizure, otherwise the caliper complete with piston will have to be replaced. At all events, the dust excluder (1) and seal (2) must always be replaced. Also ensure that the bleed screw (3) is not blocked.

Use a solution of hot water with FIAT LDC detergent to wash the metal parts.

Refit the brake caliper components by reversing the procedure for removal.

Lubricate the parts concerned with brake fluid before final assembly.

Before fitting the piston in the caliper case, fit the dust excluder on its rear. Insert the piston gradually, taking care not to damage the dust excluder.

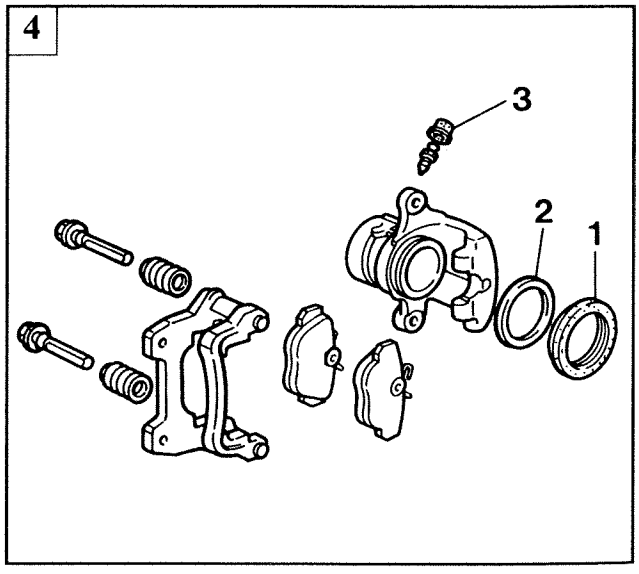

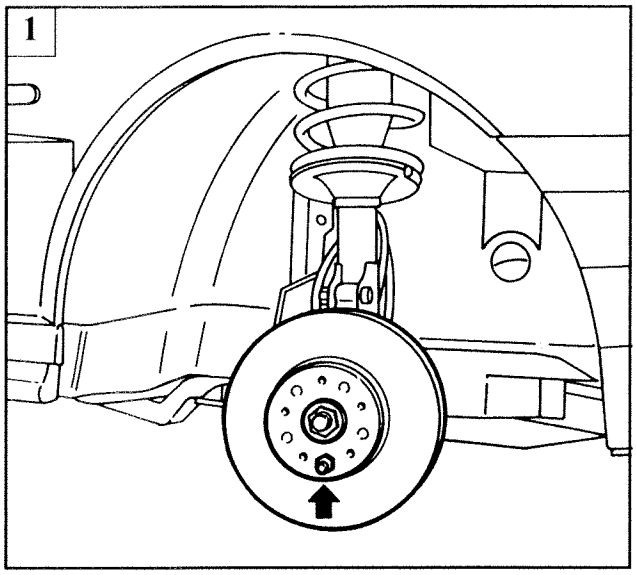

P3U025D02

BRAKE DISCS

1. Undo the brake disc attachment bolt and remove the brake disc; when refitting, remove any traces of rust to ensure that the disc is perfectly perpendicular to the hub;

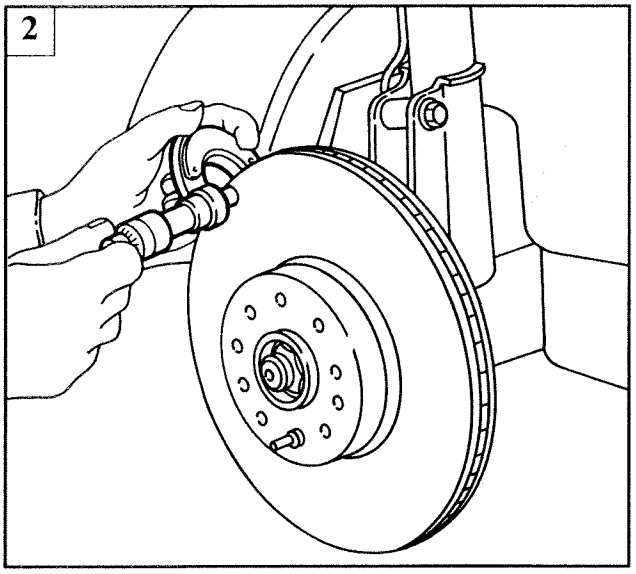

P3U025D03

2. the minimum permissible thickness of the worn brake disc is given in the table; if the value measured is less than the value in the table, the disc must be replaced. In the case of damage or deep scoring, the surfaces of the brake disc can be skimmed by a grinder; after machining, the brake disc thickness must not be less than that given in the table;

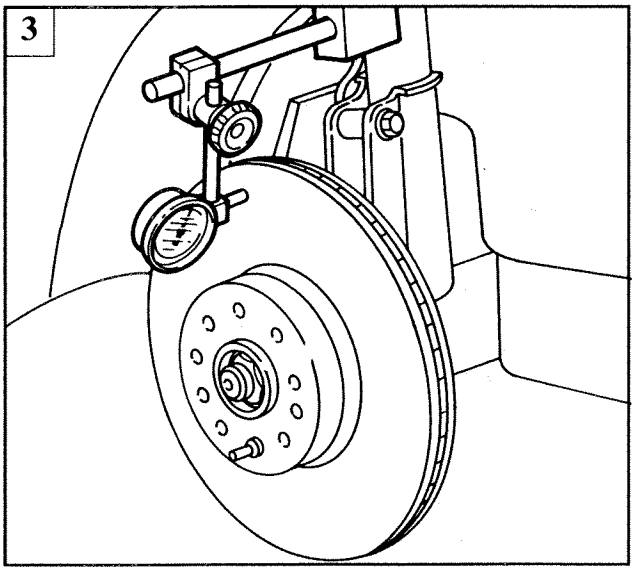

P3U025D04

3. check that the out-of-true does not exceed 0.15 mm; this value is measured 2 mm from the outer diameter of the disc.

Brake disc thickness

worn	mm	20.20
after skimming	mm	20.55

Copyright Fiat Auto

1

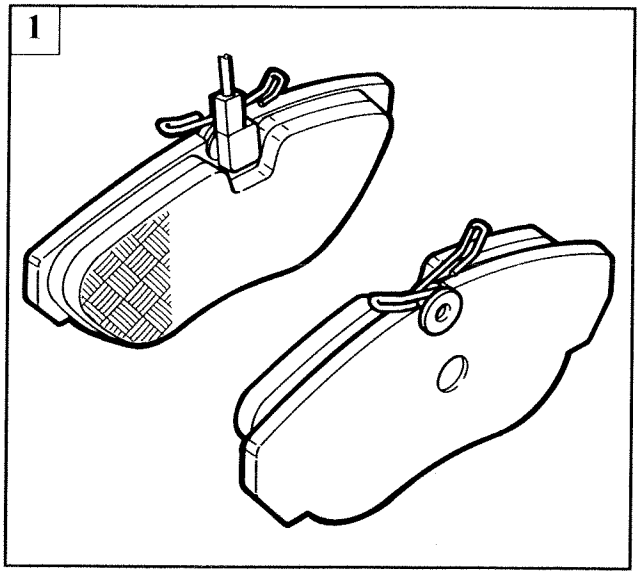

P3U025D01

BRAKE PADS

1. The brake pads must be replaced if the thickness of the friction material is less than 1.5 mm;

Check that matching brake pads are fitted to each pair of wheels.

2

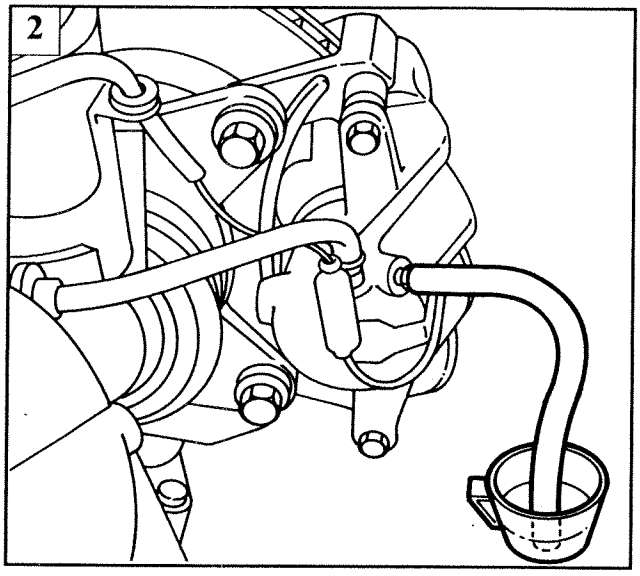

P3U026D01

BLEEDING

2. Manual bleeding

Brake fluid should not be reused.
Top up the level with fresh brake fluid.

Bleeding with Jollyfren kit

3. Connect the pipe (1) of the kit to the brake fluid reservoir;
4. connect the device to the compressed air pipe and bleed the brakes as described in the sheet enclosed with the kit.

3

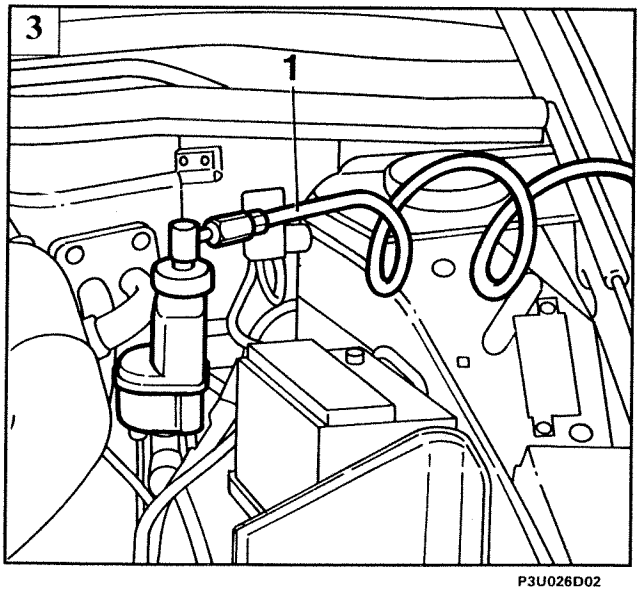

P3U026D02

4

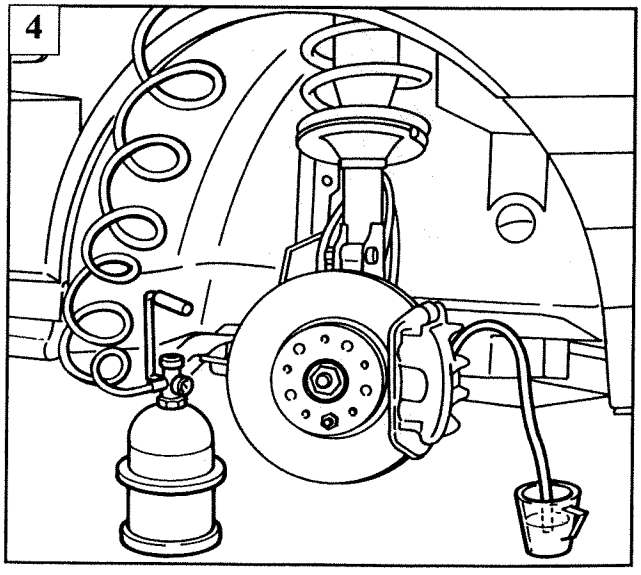

P3U026D03

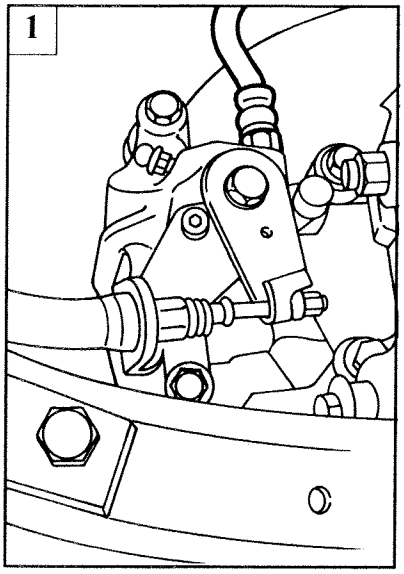

P3U027D01

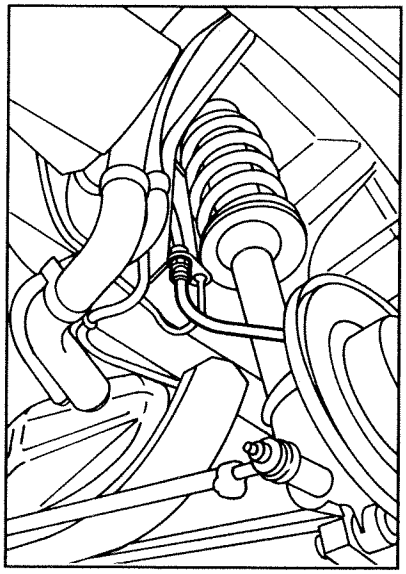
P3U027D02

REMOVING-REFITTING

Remove the braking system components as described below:

1. undo the hose using tool 1856132000 on the unions, and disconnect the rubber attachment on the shock absorber;

NOTE *The hose must not be swollen or cracked, otherwise it will have to be replaced.*

When fitting the hose, check that the rubber attachment is positioned correctly so that the hose does not come into contact with the wheelarch or with mechanical parts of the vehicle, whatever the steering or travel conditions of the wheels.

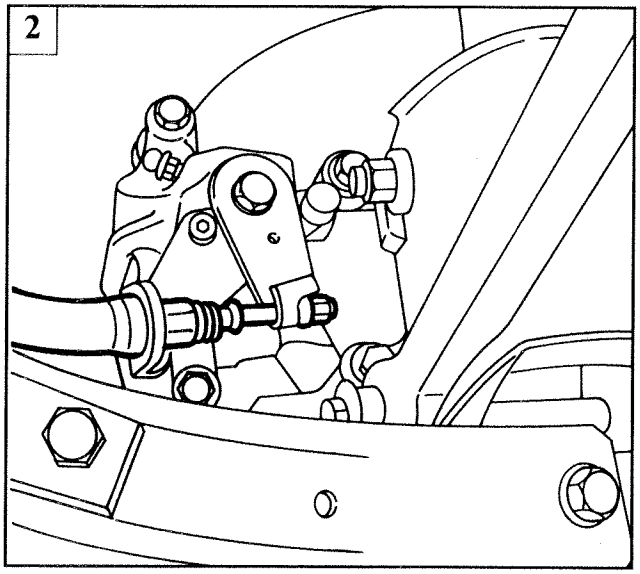

P3U027D03

2. release the handbrake cable;
3. undo the bolts securing the brake caliper and remove it, then remove the brake pads;

The caliper case bolts are self-locking and must be replaced whenever they are slackened or removed.

4. undo the bolts securing the caliper mounting bracket and remove it.

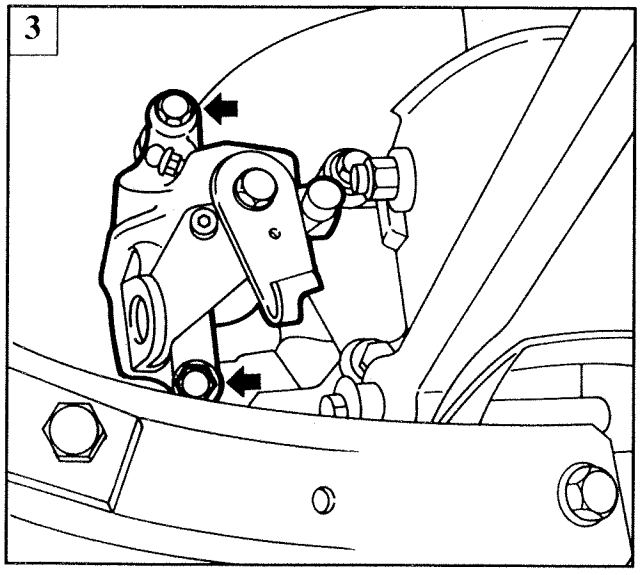

P3U027D04

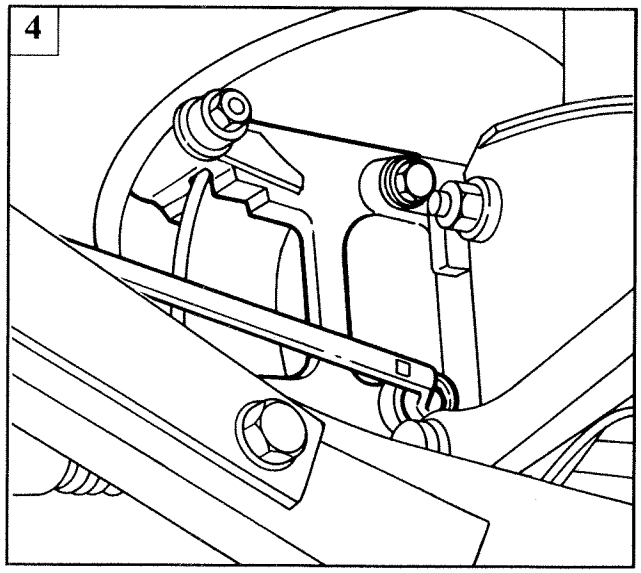

P3U027D05

Copyright Fiat Auto

1

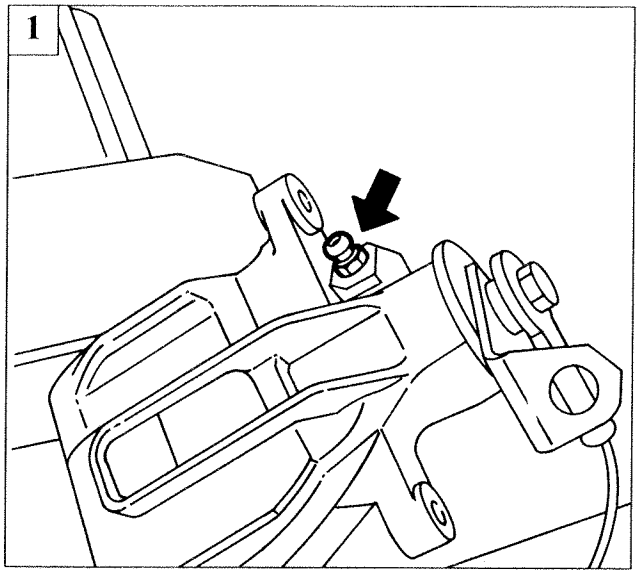

P3U028D01

2

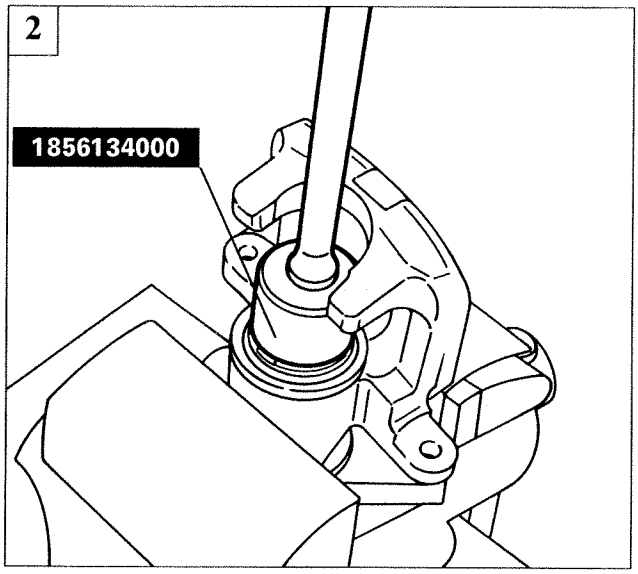

P3U028D02

3

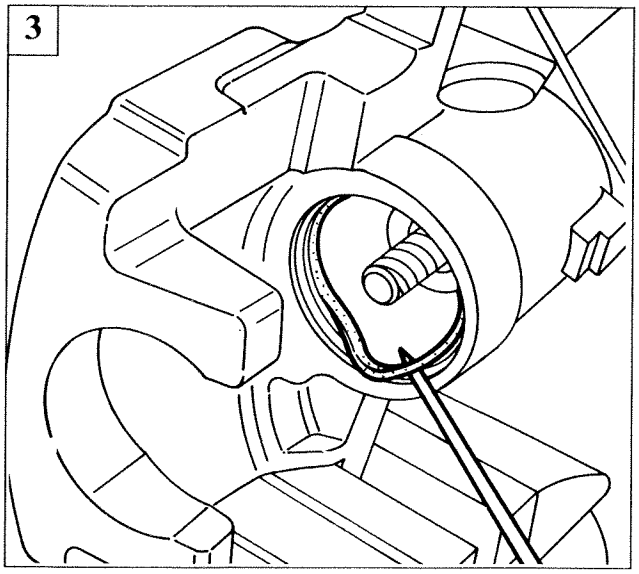

P3U028D03

BRAKE CALIPER

Place the caliper in a vice, using protections, then proceed as follows:

1. undo the air bleed screw and remove it;
2. remove the piston and dust excluder using tool 1856134000;
3. remove the seal;
4. check the components; the piston and caliper case must not show signs of friction or seizure, otherwise the caliper complete with piston will have to be replaced. At all events, the dust excluder (1) and seal (2) must always be replaced. Also ensure that the bleed screw (3) is not blocked.

Use a solution of hot water with FIAT LDC detergent to wash the metal parts.

Refit the brake caliper components by reversing the procedure for removal.

Before fitting the piston in the caliper case, fit the dust excluder on its rear. Insert the piston gradually, taking care not to damage the dust excluder.

Lubricate the parts concerned with brake fluid before final assembly.

4

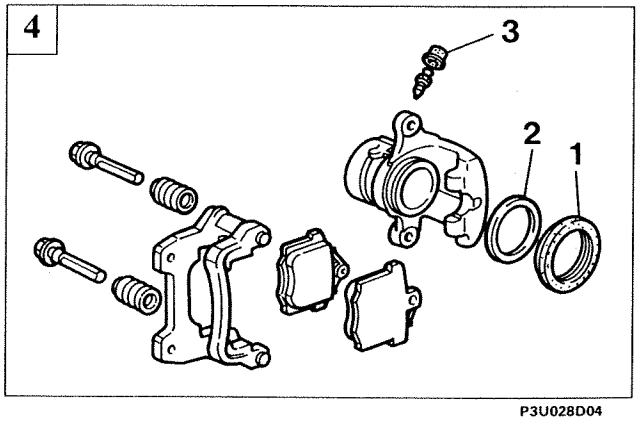

P3U028D04

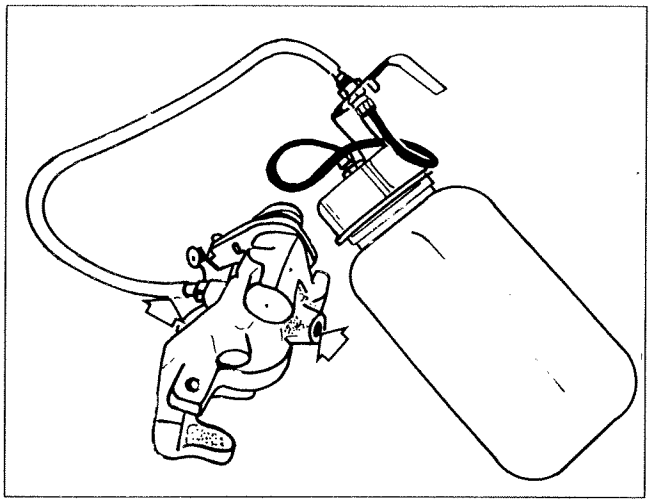

P3U029D01

Filling the brake caliper

After overhauling the brake caliper and before refitting it to the vehicle, it must be filled in accordance with the following procedure:

- slacken the bleed screw;
- insert the end of a transparent tube in the bleed screw hole;
- using an ordinary container with brake fluid, introduce fluid in the caliper until air bubble emerge from the threaded hole in which the brake hose is connected;
- tighten the bleed screw.

AUTOMATIC REAR BRAKE AND HANDBRAKE ADJUSTER

The rear brake caliper piston contains a device which permits automatic adjustment of the distance between disc and friction pads. This device consists of a nutscrew (2) which rotates on the shaft (5) only in the advancement direction because of the action of the Belleville washer (4), and of a shaft (5) on which the nutscrew (2) is screwed. This shaft cannot rotate since it is attached to the caliper case by the pins (6) and tube (7).
The shaft and nutscrew are attached by a multi-start threaded connection with a preset clearance (A).
During braking, the actuating piston (1), pushed by hydraulic pressure, moves towards the brake pad with the nutscrew (2), with the latter attached to the piston by the retaining ring (3) and the Belleville washer (4).
If the brake pads are excessively worn, the endfloat (A), even if taken up, cannot by itself absorb the entire travel of the actuating piston (1). The nutscrew (2) then momentarily moves away from its point of contact with the piston (1), but the intervention of the Belleville washer (4) makes the nutscrew (2) on the shaft (5) rotate until it returns in contact with the actuating piston (1).
When the handbrake is operated, the mechanical effort is transmitted by from the lever to the shaft (6) via the rotation of three balls (8) on angled surfaces positioned at 120°, and then through the shaft-nutscrew connection, and reaches the actuating piston (1) and brake pads.
The nutscrew (2) and hence the actuating piston (1) joined to it cannot rotate, since the piston comprises fixed splines which, during braking, engage in the brake pad plate.

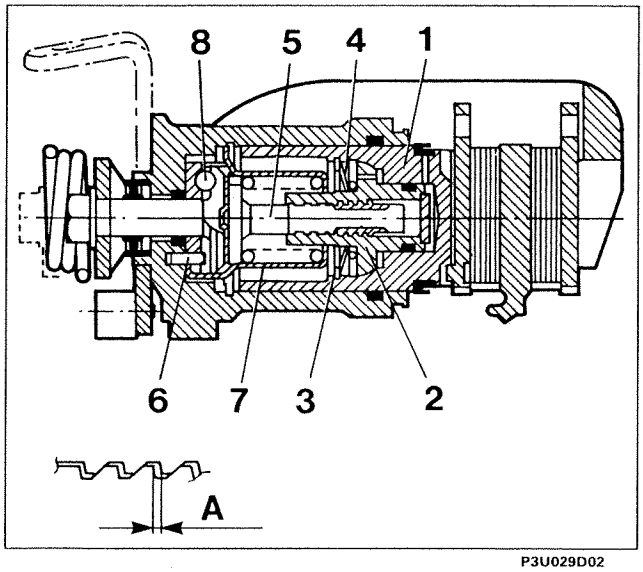

P3U029D02

NOTE *Since the automatic device is immersed in brake fluid, it does not wear and so does not need to be repaired.*

Cross section of rear brake caliper cylinder

1. Piston
2. Nutscrew
3. Retaining ring
4. Belleville washer
5. Shaft
6. Pins
7. Tube
8. Balls on angled surfaces

A. Clearance between nutscrew and shaft

Copyright Fiat Auto

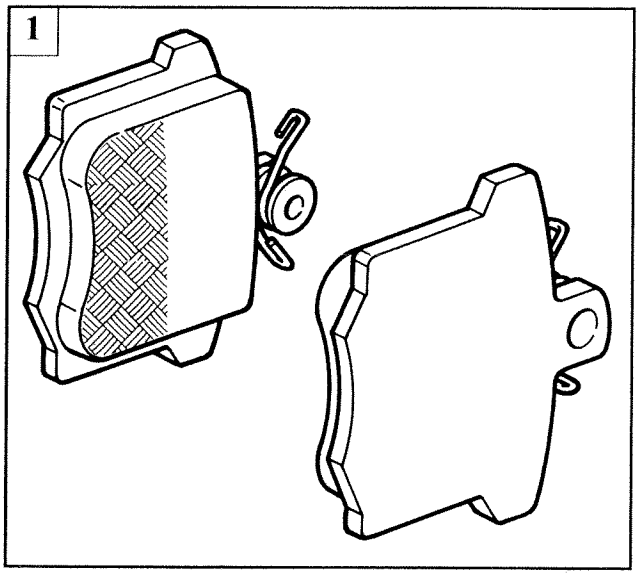

P3U030D01

BRAKE PADS

1. The brake pads must be replaced when the thickness of the friction material is less than 1.5 mm;

Check that matching brake pads are fitted to each pair of wheels.

BRAKE DISCS

2. Undo the brake disc attachment bolt and remove the brake disc; when refitting, remove any traces of rust to ensure that the disc is perfectly perpendicular to the hub;

3. the minimum permissible thickness of the worn brake disc is given in the table; if the value measured is less than the value in the table, the disc must be replaced. In the case of damage or deep scoring, the surfaces of the brake disc can be skimmed by a grinder. After machining, the brake disc thickness must not be less than that given in the table;

4. check that the out-of-true does not exceed 0.15 mm; this value is measured 2 mm from the outer diameter of the disc.

Brake disc thickness

worn	mm	9.20
after skimming	mm	10.10

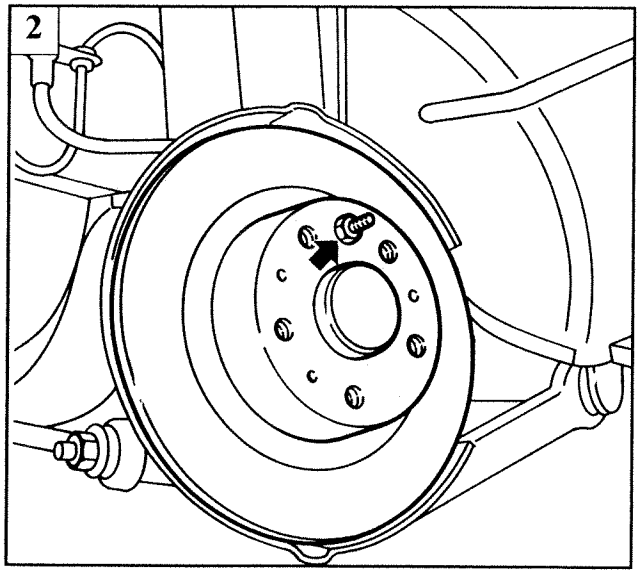

P3U030D02

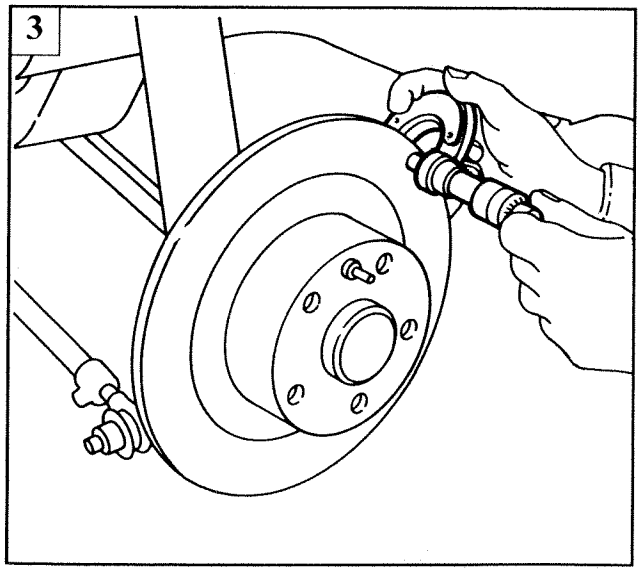

P3U030D03

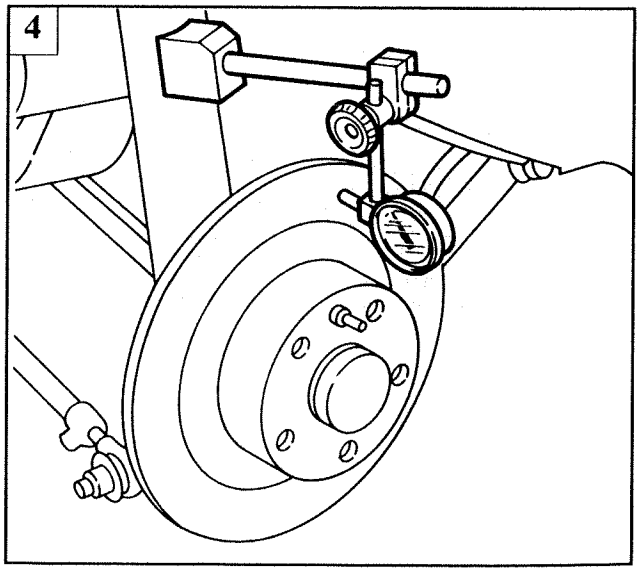

P3U030D04

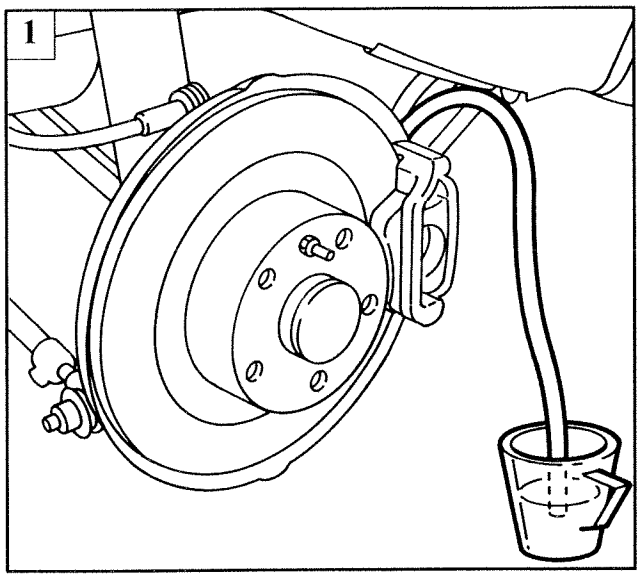

P3U031D01

BLEEDING

1. Manual bleeding;

Brake fluid should not be reused.
Top up the level with fresh brake fluid.

The brakes can also be bled using the Jollyfren kit, in accordance with the procedure described for the front brakes.

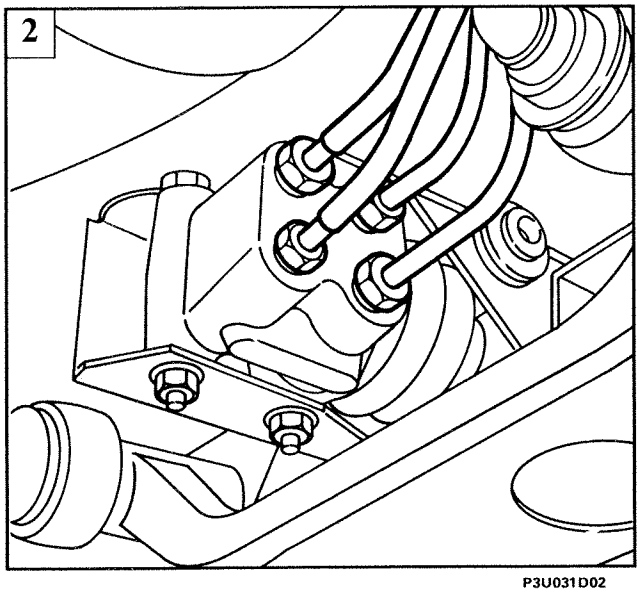

P3U031D02

BRAKE PRESSURE PROPORTIONING VALVE

2. remove the brake pipes;

The connections which converge on the load proportioning valve are 11 mm and 13 mm; use the wrench 1856132000 for the 11 mm ones and an ordinary spanner for the 13 mm ones, being very careful not to damage the connections.

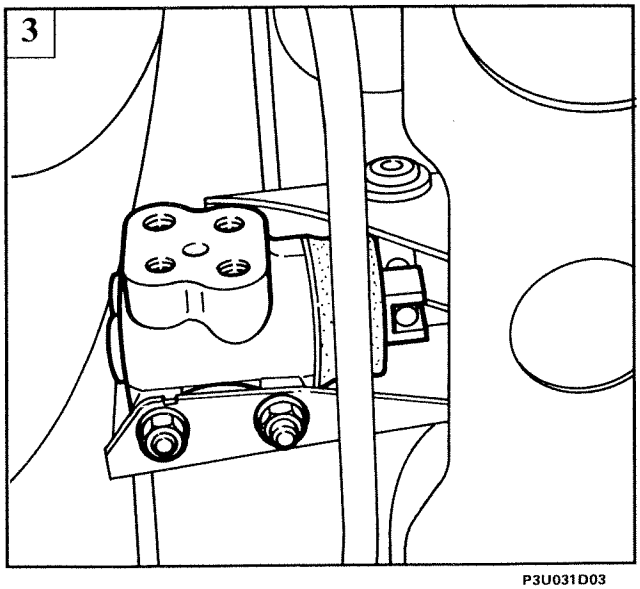

P3U031D03

3. undo the bolts securing the pressure proportioning valve and remove it.

Copyright Fiat Auto

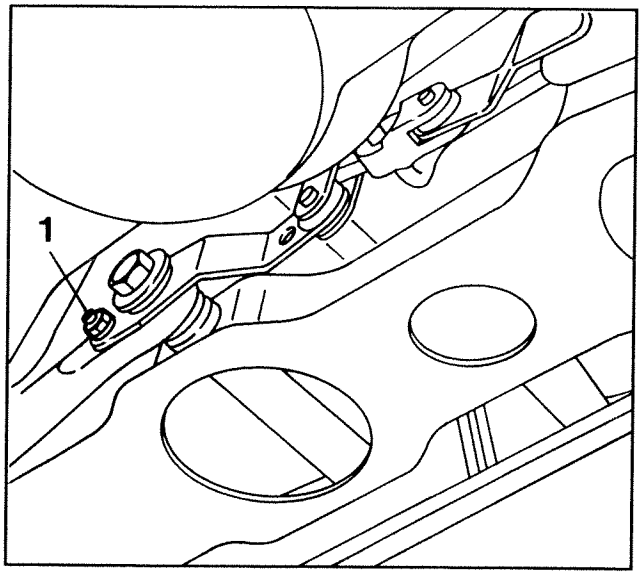

P3U032D01

Adjustment

- Settle the rear suspension;
- place the vehicle (in running order, i.e. with full cooling system, spare wheel and accessories) on a horizontal surface with the wheels on the ground;
- load a weight of 55 kg in the boot, preferably on the inside wall;
- undo the bracket attachment screw (1);

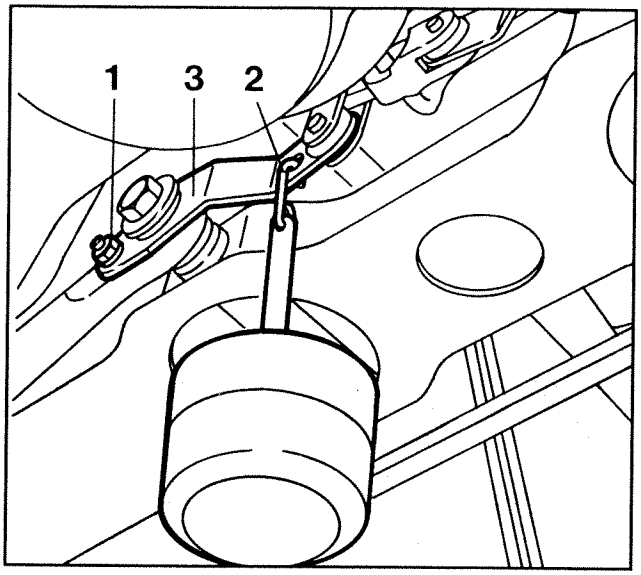

P3U032D02

- apply a load of 4 daN to the eyelet (2);
- hold the bracket (3) in this position and lock the bracket attachment screw (1).

NOTE *If the brake pressure proportioning valve is faulty, the complete unit must be replaced.*

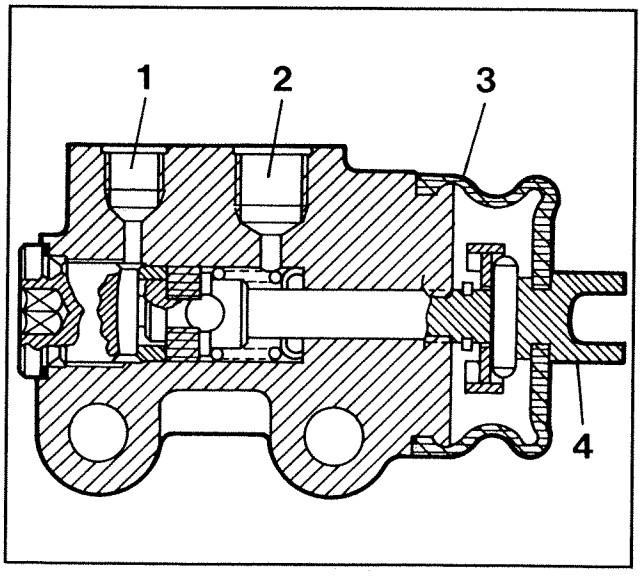

P3U032D03

Operation

The rear wheel brake pressure proportioning valve, secured to the rear crossbeam, differentiates the braking pressure in the rear wheel brake circuit in relation to the pressure in the front wheel brake circuit, in accordance with the vehicle's load and deceleration conditions. The change in pressure is determined by the position assumed by the spring connected to the suspension's transversal rods which, by means of the fork (4), acts on the proportioning valve's piston.

1. Seat for brake pipe connector
2. Seat for brake pipe connector
3. Dust excluder
4. Piston fork

CONTROL CABLLES

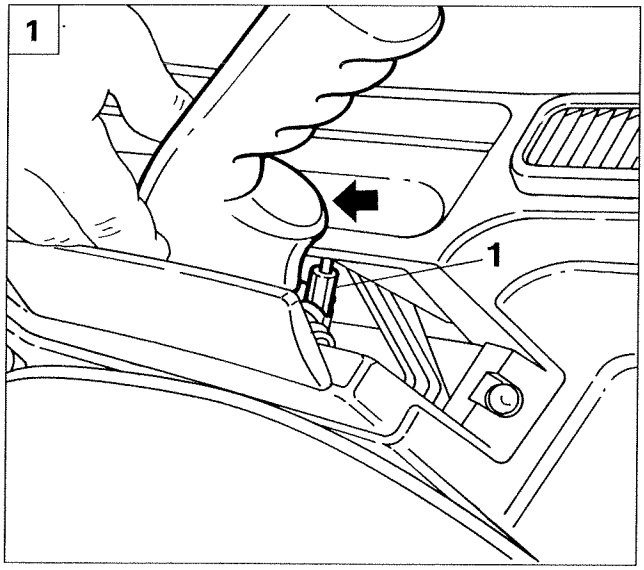

P3U133D01

Removing-refitting

Proceed as follows to disconnect the parking brake control cables:

1. working from inside the vehicle, prise up the parking brake lever boot (arrowed) and loosen adjustment nut (1);

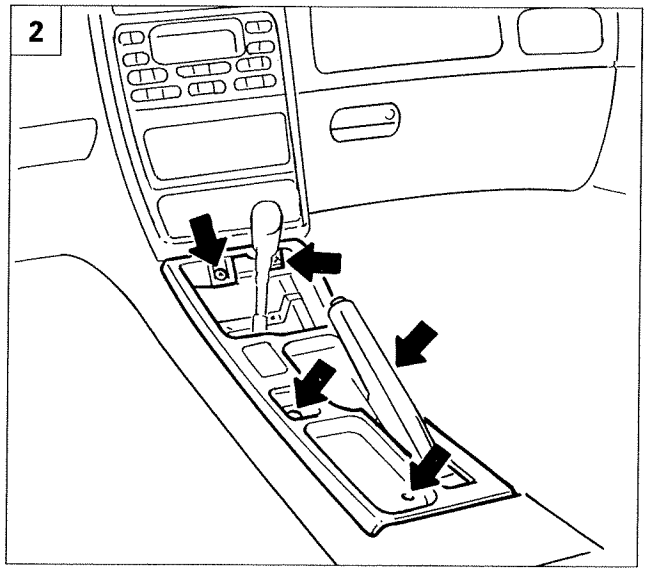

P3U133D02

2. unscrew the arrowed bolts and remove the front tunnel trim;
3. remove the rear air ventilation outlets;
4. unscrew the rear tunnel trim retaining bolts;

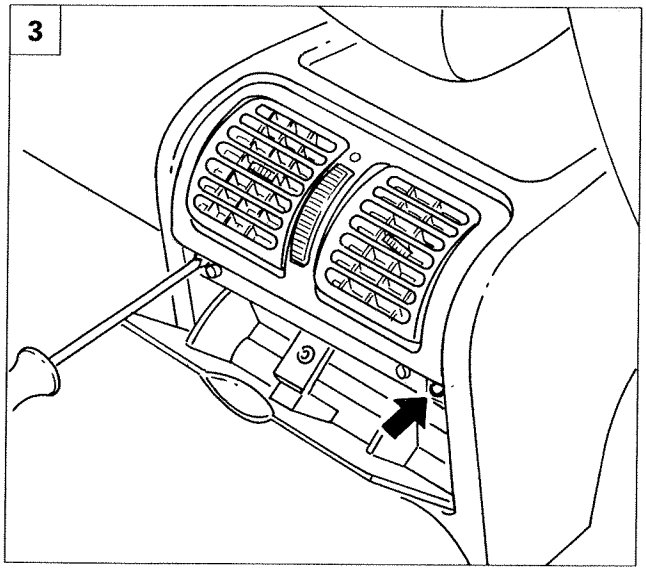

P3U133D03

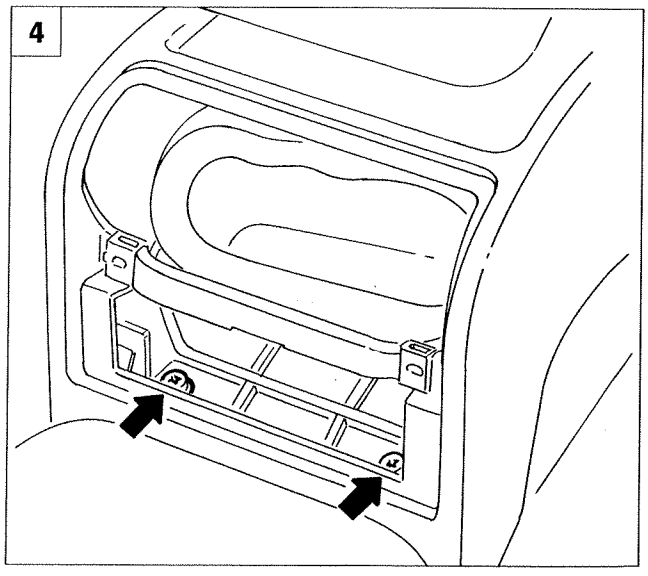

P3U133D04

3U133D

33.

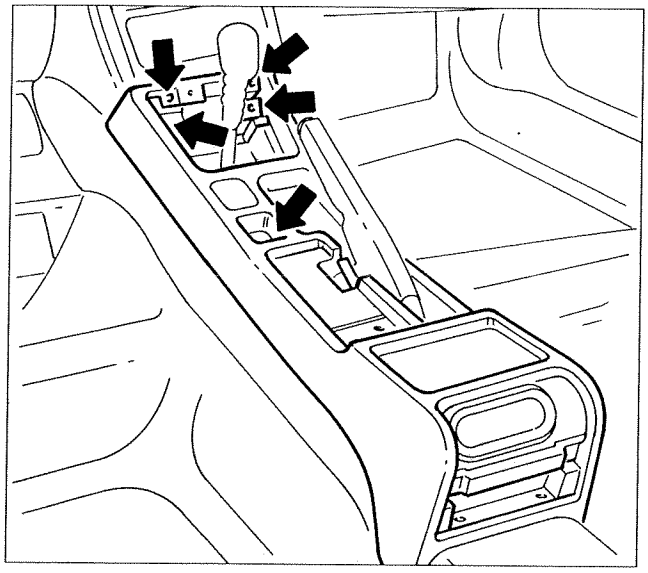

P3U134D01

- tilt the seat, then remove the tunnel trim by unscrewing the bolts shown;

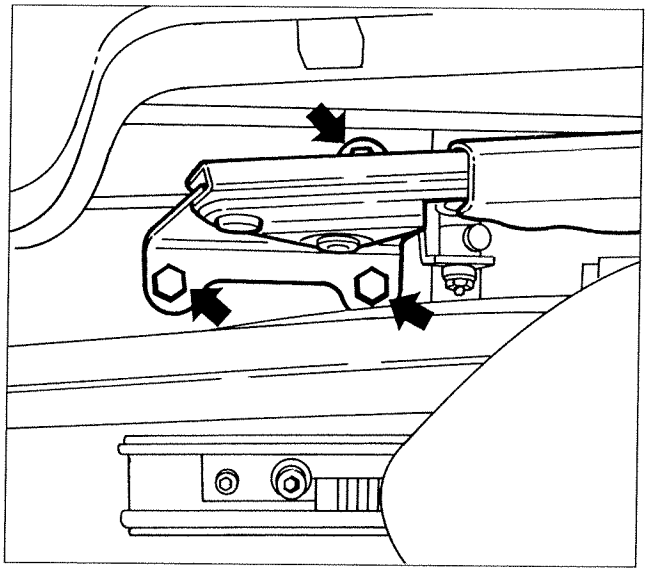

P3U134D02

- unscrew the bolts (arrowed) securing the parking brake;

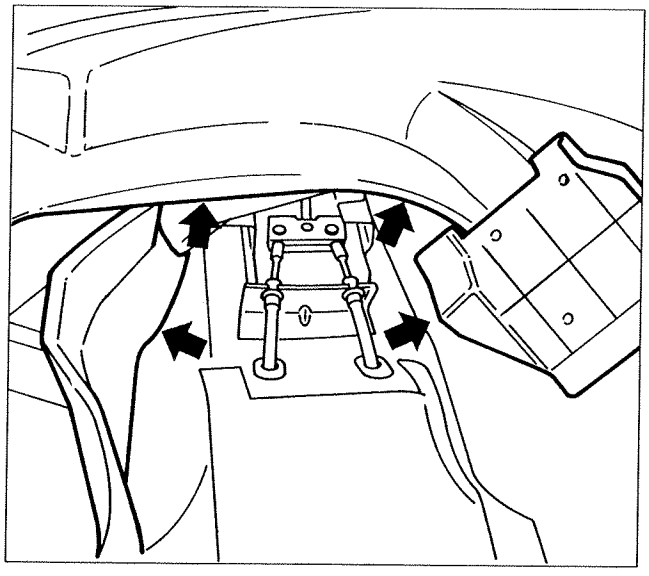

P3U134D03

- remove the rear seat, left and right sill plates and lift the floor covering towards the front part of the vehicle;

NOTE *Take particular care when lifting the floor covering, in order to avoid damage.*

3U134D

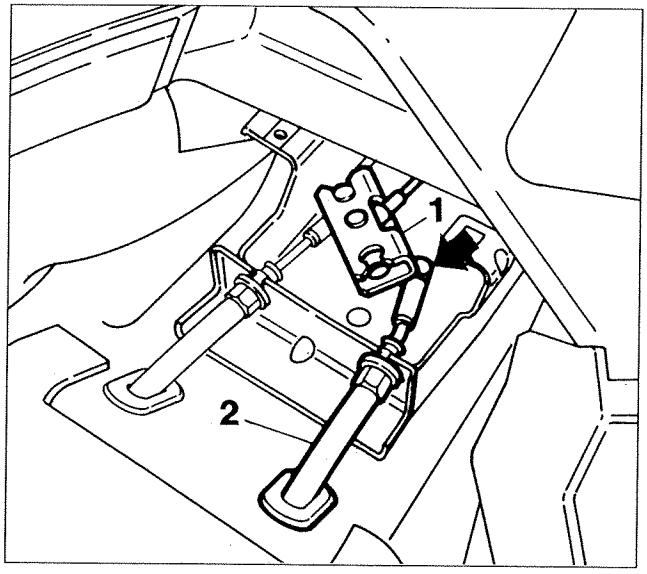

P3U135D01

- disconnect the end (arrowed) of the right rear cable from the front cable anchor (1) and move back by prising up the body seal (2);

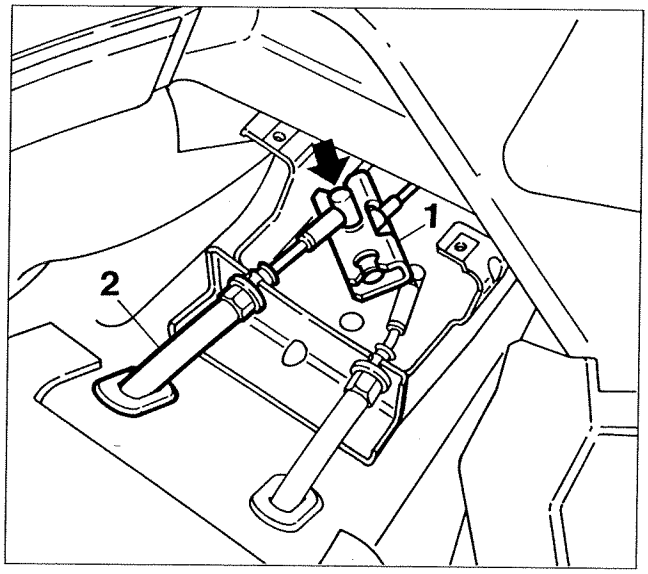

P3U135D02

- disconnect the left rear cable end (arrowed) from the front cable anchor (1) and move back by prising up the body seal (2);

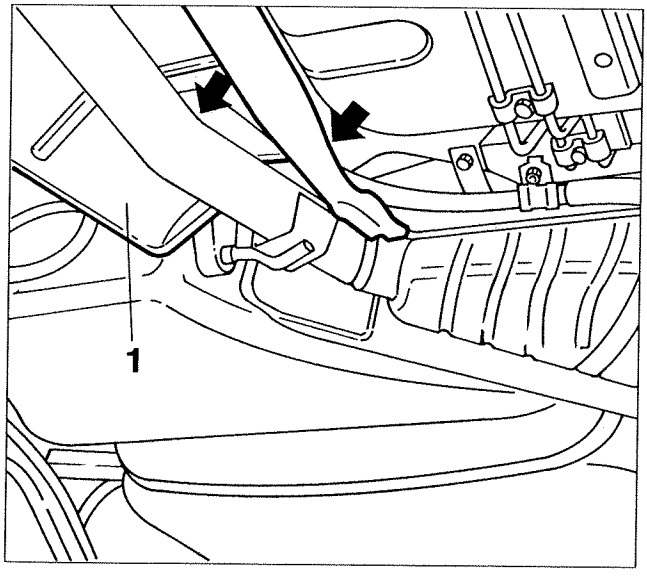

P3U135D03

- raise the vehicle and loosen nuts (arrowed) retaining central heat shield (1);

3U135D

33.

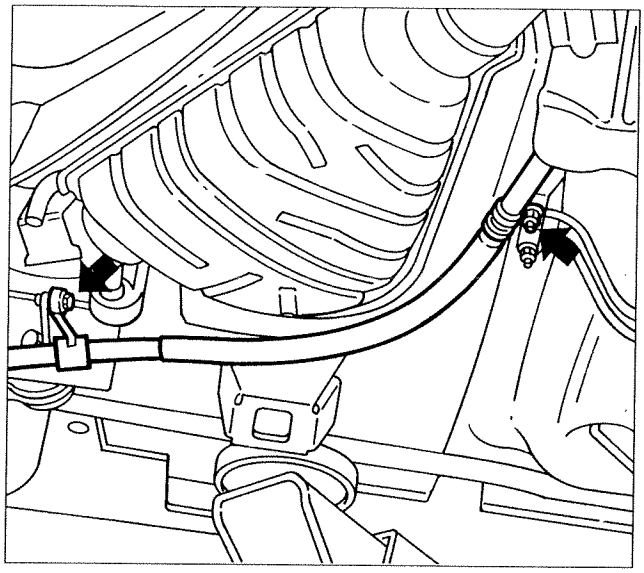

P3U136D01

- unscrew the bolts (arrowed) fastening the parking brake cable sheath support collars;

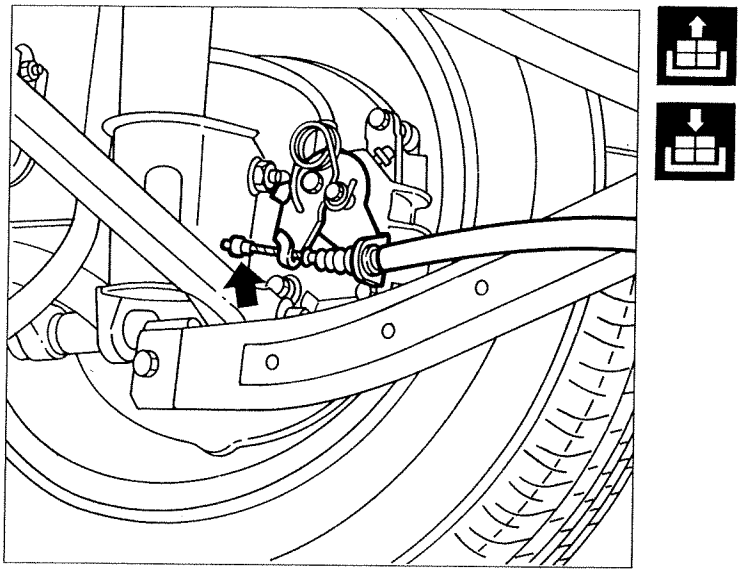

P3U136D02

- disconnect the left parking brake cable end (arrowed) from its brake caliper;

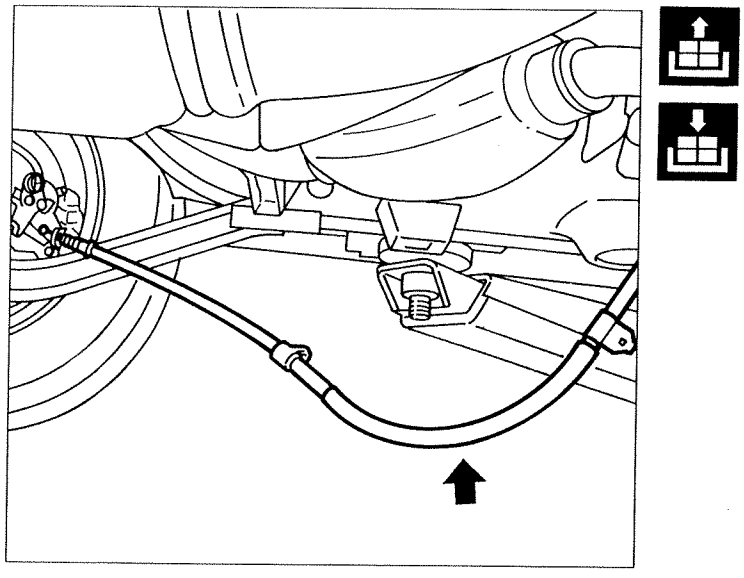

P3U136D03

- move the parking brake cable (arrowed) back and remove from its housing;
- proceed in the same way to remove the right parking brake cable.

NOTE *Reverse removal instructions to refit parking brake cables, then carry out settling and adjustment procedures as described below.*

3U136D

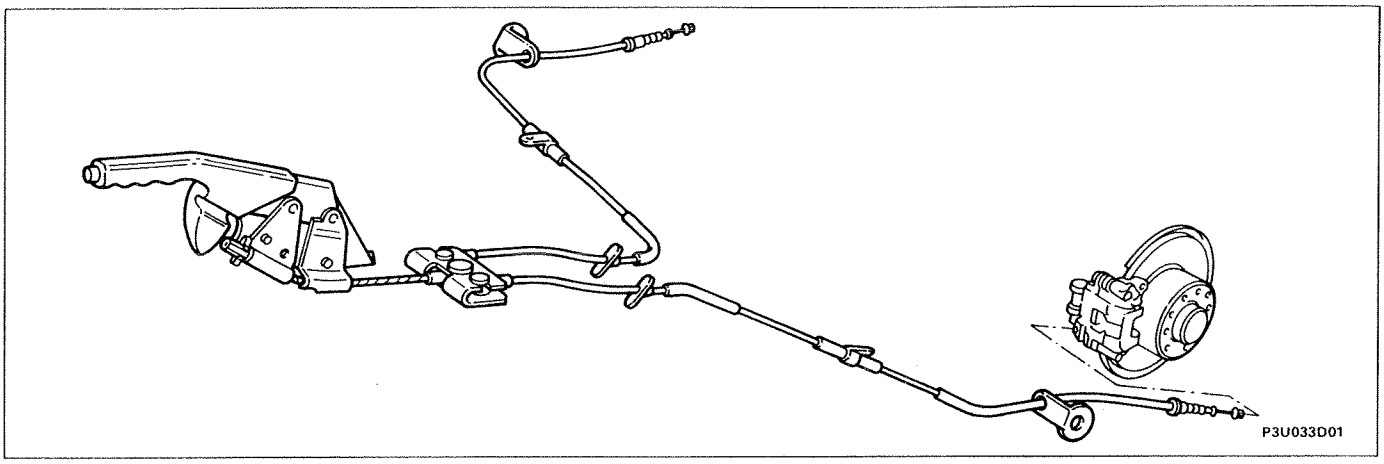

NOTE *Check the operation of each part shown in the figure, and check that the cable slides freely in its seating. If there are operating faults or signs of wear, replace the parts concerned.*

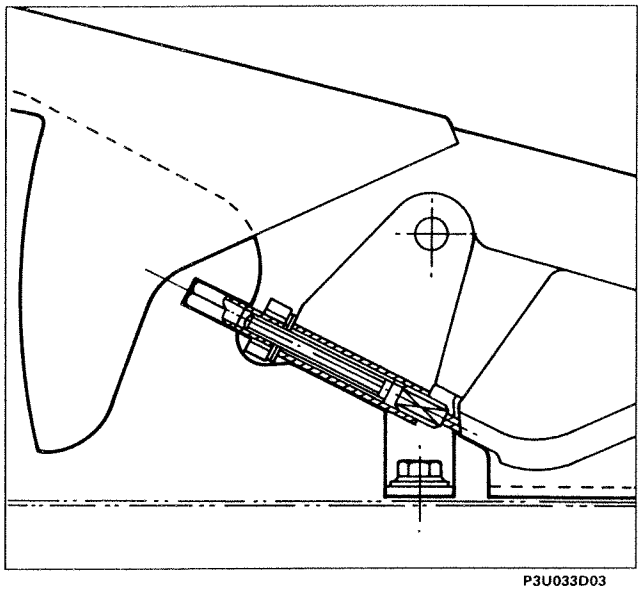

BEDDING IN

Adjust the adjustment nut shown in the figure in order to obtain sufficient tension to be able to work on the handbrake lever.
Move the lever to the sixth notch on the sector gear and tighten the adjustment nut (0.3 daNm).
Operate the handbrake vigorously a few times to bed in the braking system.

ADJUSTMENT

Move the handbrake lever to the third notch on the sector gear, starting from the rest position, and tighten the adjustment nut (0.33 daNm).
Return the lever to the rest position and gradually apply a force of increasing intensity, checking that it travels 5-6 notches; if not, repeat the adjustment procedure.

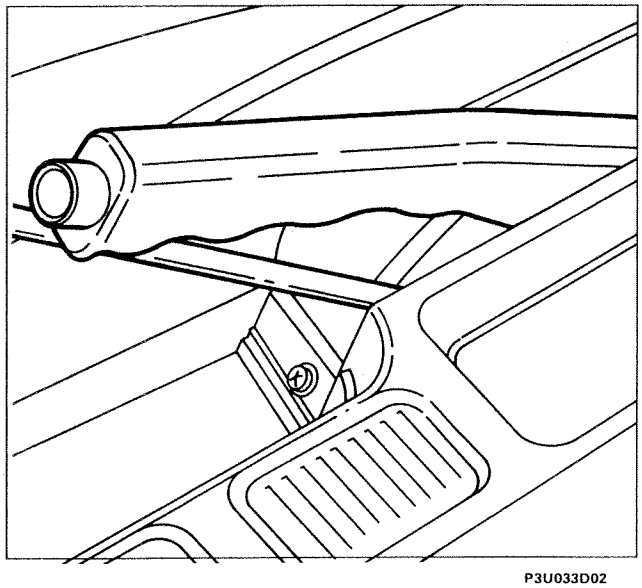

NOTE *After adjustment, when the handbrake lever is in the rest position, the wheels should turn freely.*

The play in the handbrake is taken up automatically; however, it is advisable always to check the parameters for correct operation (as described in the adjustment procedure).

Copyright Fiat Auto

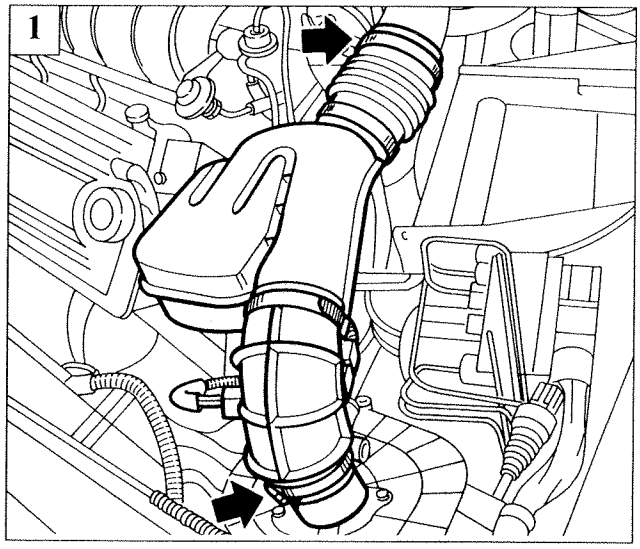

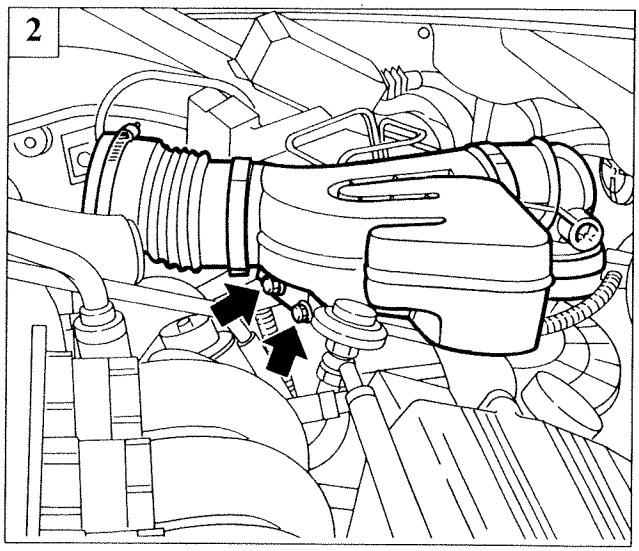

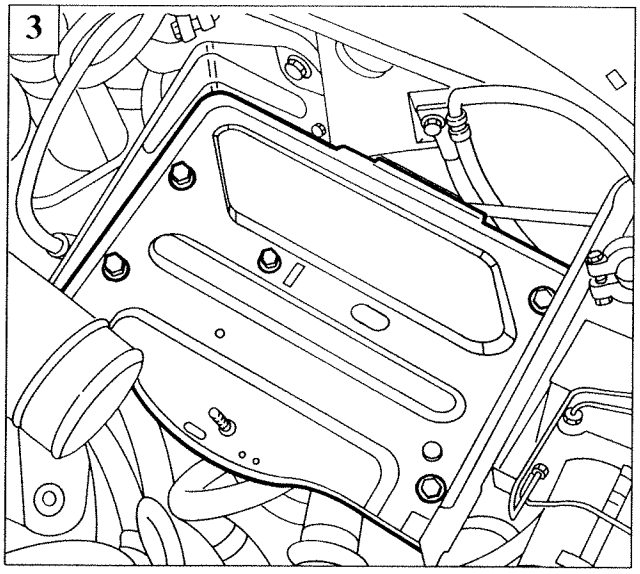

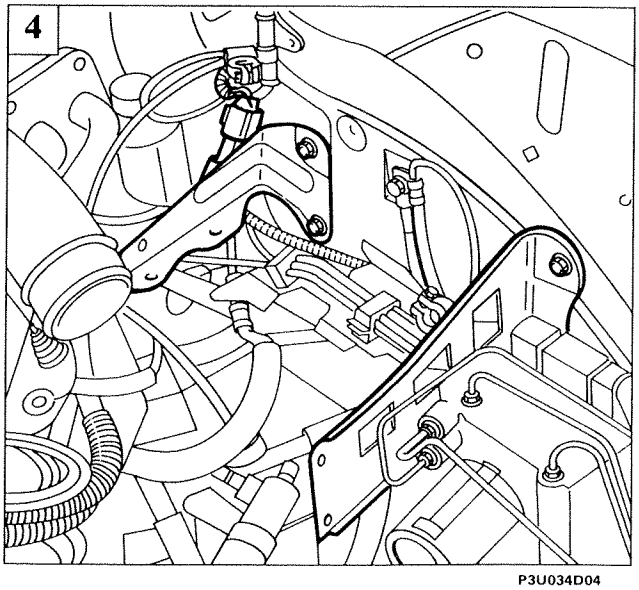

REMOVING-REFITTING

Disconnect and remove the battery, then:

1. disconnect the wiring connections from the flow meter and air temperature sensor, then undo the clips at the two ends of the pipe as shown;
2. undo the bolts indicated and remove the intake pipe complete with mounting bracket;
3. remove the plastic trim and take out the battery cage;
4. withdraw the electrical connection, then remove the side brackets;

BRAKE FLUID RESERVOIR

Removing

5. Unscrew the cap and remove the filter;

Carry out this operation with very clean fingers in order not to contaminate the brake fluid.

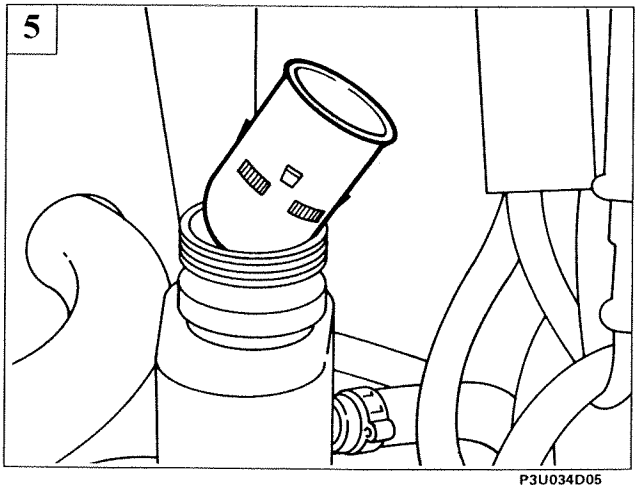

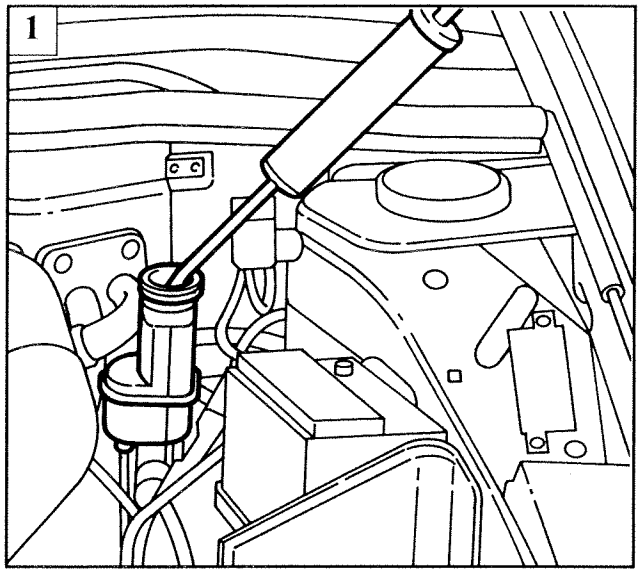

P3U035D01

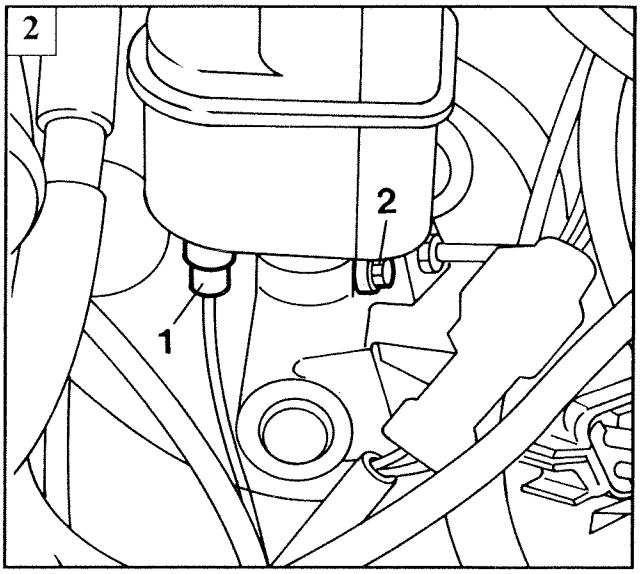

P3U035D02

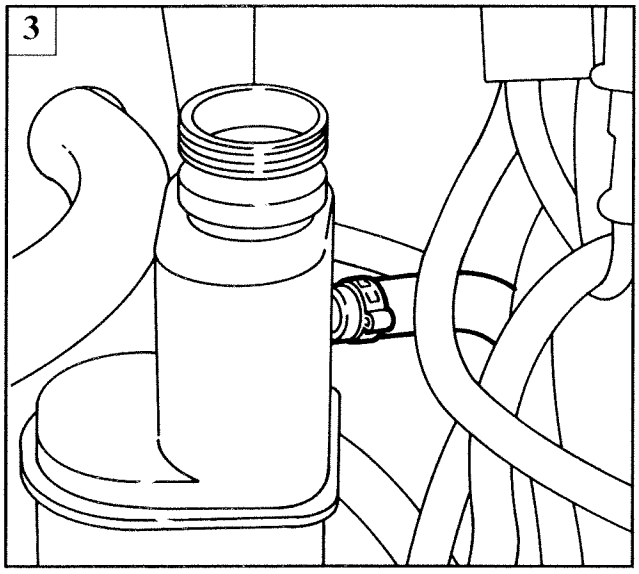

P3U035D03

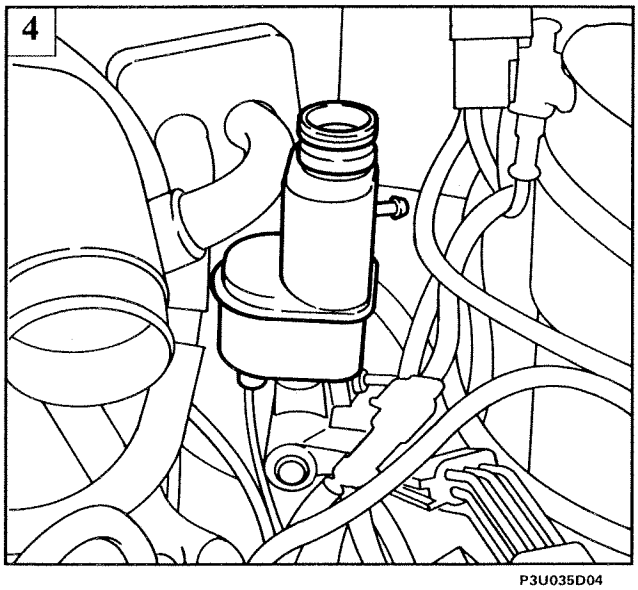

P3U035D04

1. Remove the brake fluid from the reservoir using the special syringe;
2. disconnect the brake fluid level sensor (1) and undo the bolt (2) securing the reservoir to the brake pump;

NOTE *The brake fluid level sensor cannot be removed from the reservoir, since it is secured with mastic.*

3. remove the clip and disconnect the clutch pump pipe;

4. pull the reservoir upwards and withdraw it.

Be careful if fluid remaining in the reservoir emerges.

Copyright Fiat Auto

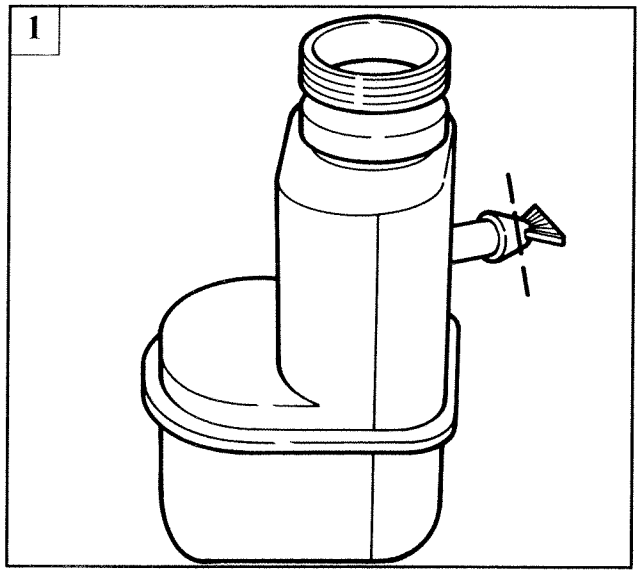

Refitting

1. The reservoir is supplied as a spare part with the clutch pipe attachment plugged, so that it can also be used on vehicles with automatic transmission; for vehicles with manual transmission, a cut must be made as shown in the figure.

Before filling the reservoir, ensure that it is thoroughly clean.

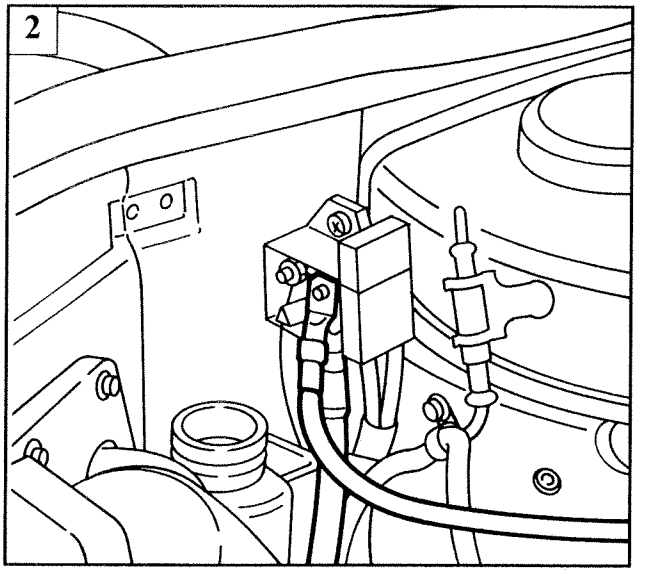

BRAKE PUMP

Removing

2. Disconnect the battery cable and alternator cable from the connector block;
3. withdraw the vacuum signal pipe from the servo unit, the undo the two pipes delivering brake fluid to the ABS electrohydraulic control unit using tool 1856132000;
4. release the power steering pipe from the clip (1), unscrew the attachment nuts and remove the brake pump.

When removing the brake pump, be careful with the seal which remains in the servo unit and the pushrod which rests inside the pump.

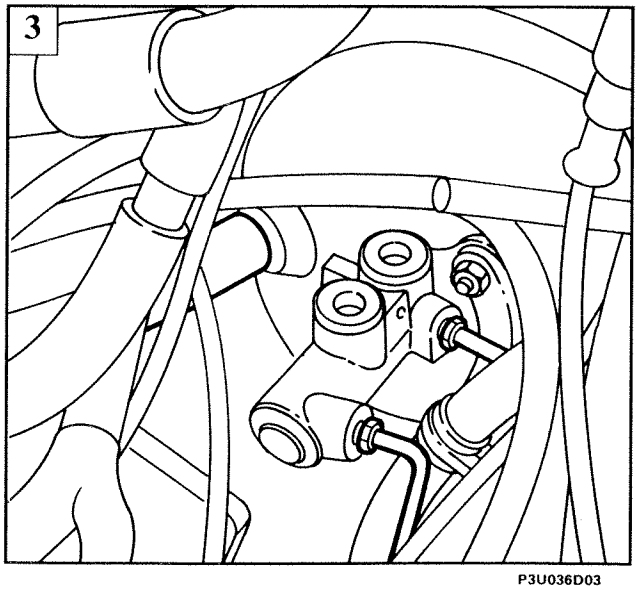

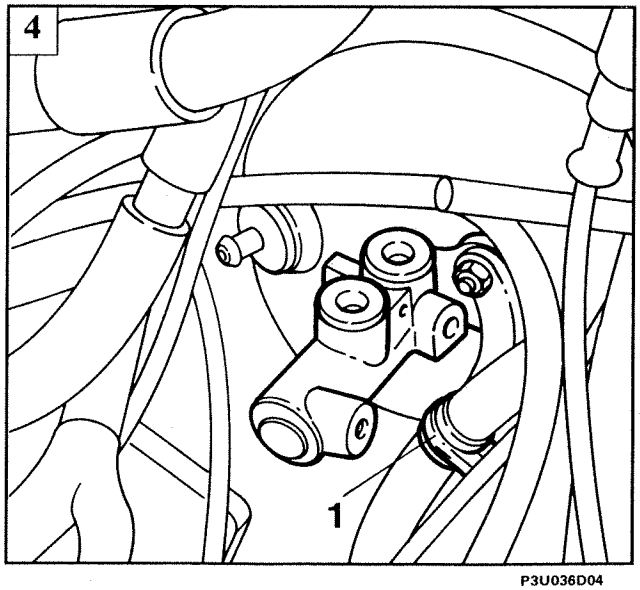

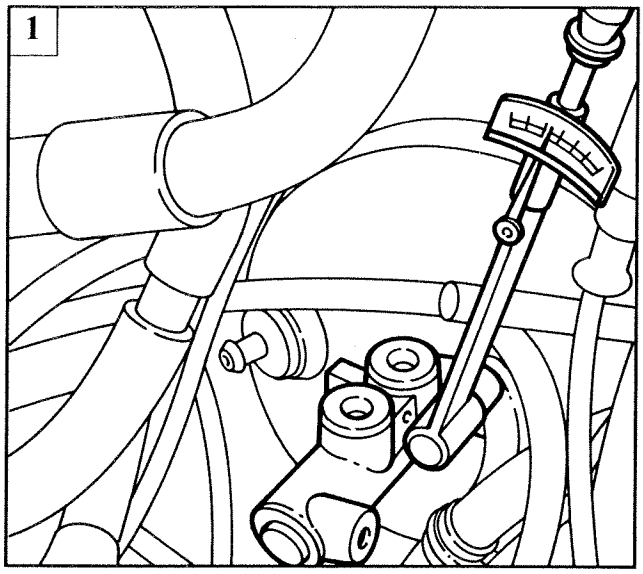

P3U037D01

2.5 daNm

Refitting

When refitting the brake pump, be careful with the pushrod which only rests inside the pump.

1. Tighten the brake pump nuts to the specified torque.

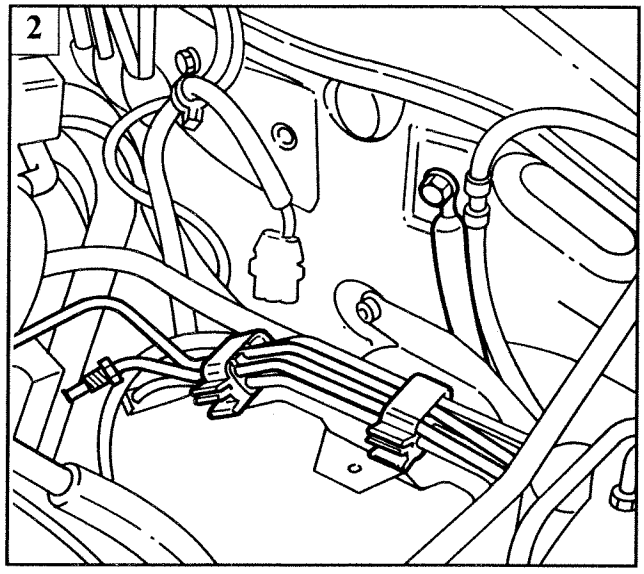

P3U037D02

SERVO UNIT

Removing-refitting

2. Undo the screw, disconnect the earth cable and move it aside, then open the clips, withdraw the two pipes which lead to the pump and move them upwards, taking care not to bend them;
3. disconnect the reverse gear inhibitor cable and move it aside, then remove the gear selector lever cover;
4. undo the bolts securing the inlet manifold to the throttle body and rotate it upwards;

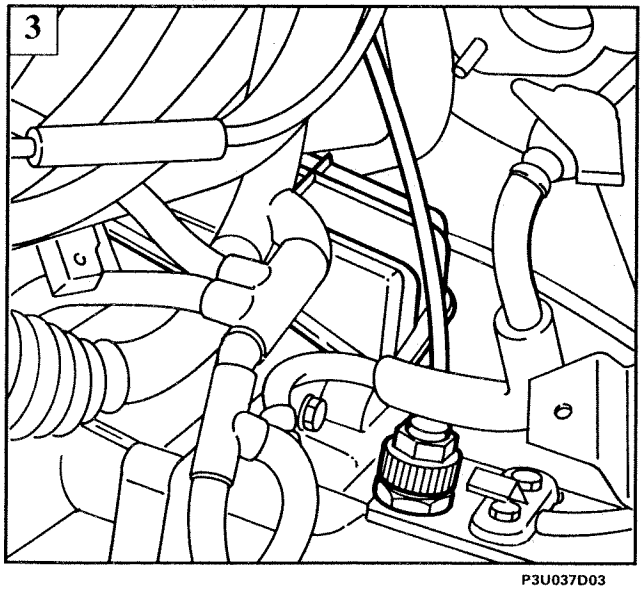

P3U037D03

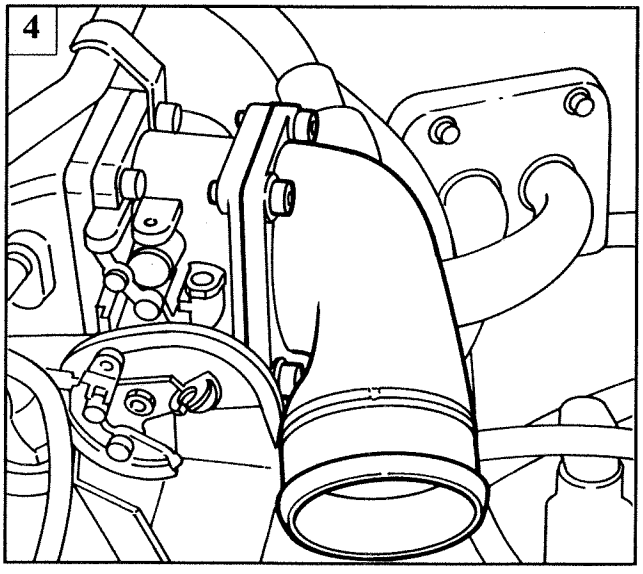

P3U037D04

Copyright Fiat Auto

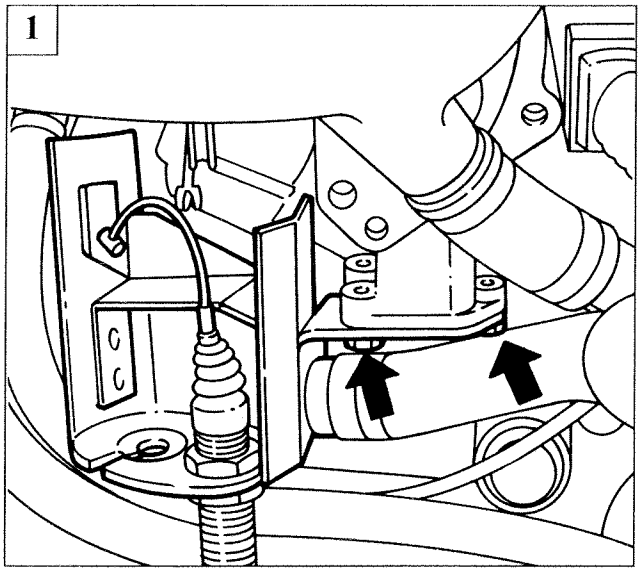

1. Disconnect the throttle cable, undo the bolts securing the throttle cable mounting bracket and move it aside so that it is not in the way for removal of the servo unit;

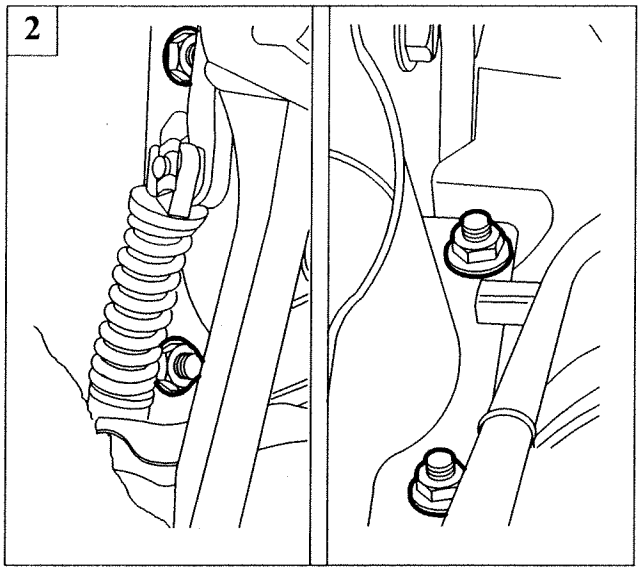

2. working from inside the vehicle, undo the bolts securing the pedal assembly to the servo unit; when refitting, tighten the bolts to the specified torque;

2.5 daNm

3. remove the stop on the pin connecting the servo pushrod to the brake pedal and withdraw the pin;

When refitting, the projection of the servo pushrod must be facing downwards.

4. withdraw the servo brake from the engine compartment by rotating it as appropriate.

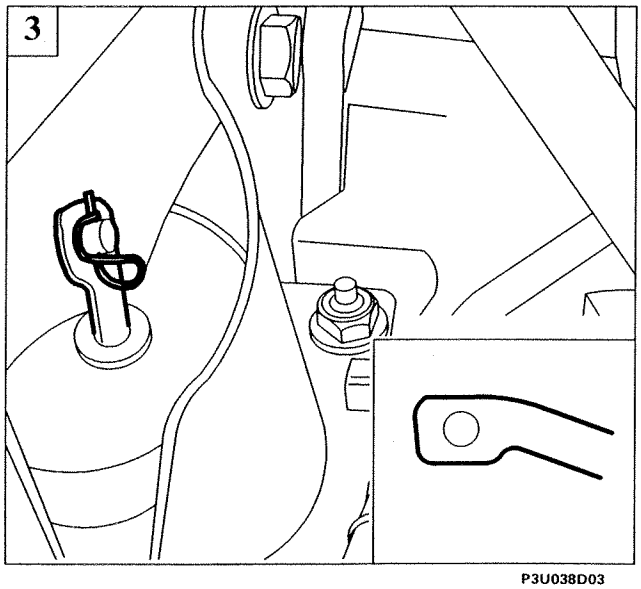

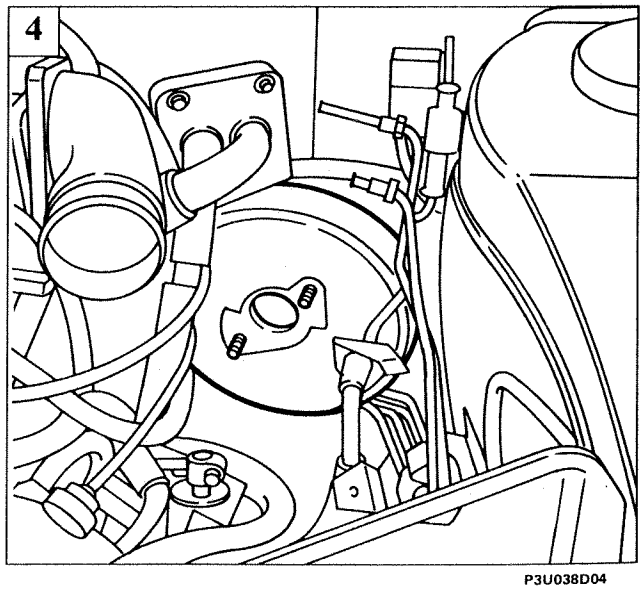

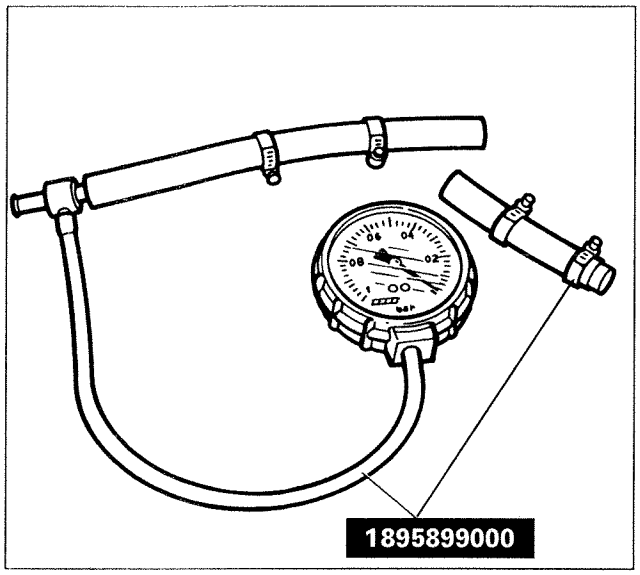

P3U039D01

VACUUM UNIT

Vacuum gauge with connections for checking the vane-type vauum units, on the vehicle

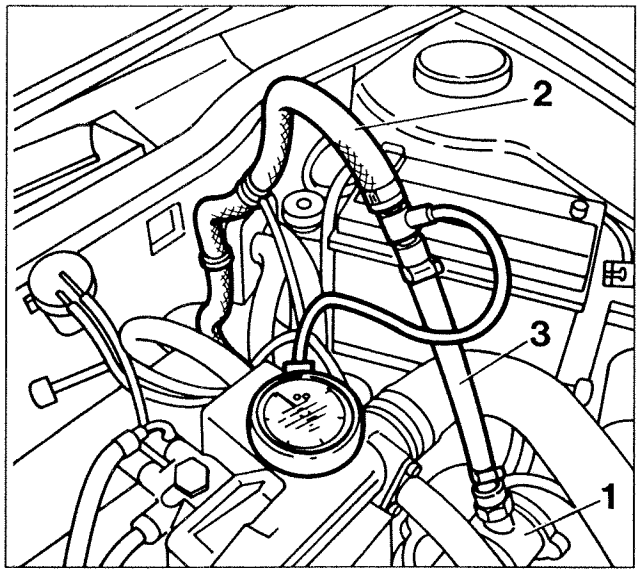

P3U039D02

Checking operating faults

In the case of operating faults in the braking system, before replacing the vacuum unit the entire vacuum circuit should be checked as follows:

- with the engine off, drain the brake vacuum circuit completely by pressing the brake pedal repeatedly;
- fit the vacuum gauge 1895899000 (3) between the one-way valve, located on the vacuum unit (1), and the pipe (2) connecting to the servo unit (as illustrated in the Figure);
- start the engine: 20 seconds after starting (with the engine idling), the vacuum reading on the vacuum gauge (3) must be over 0.6 bar.

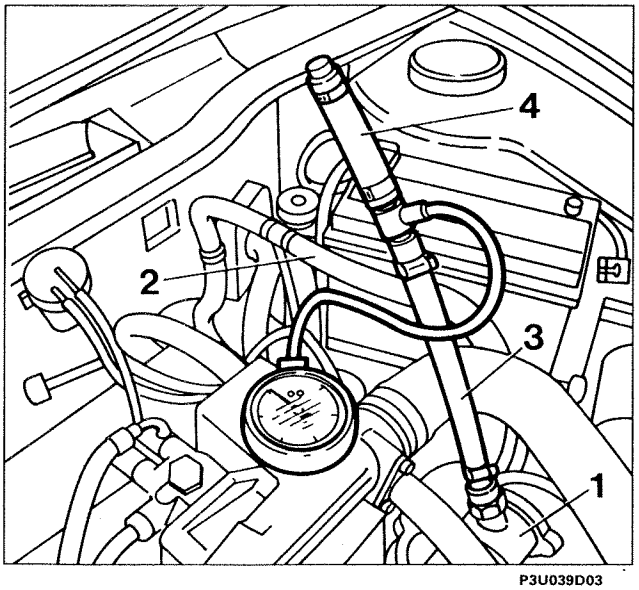

P3U039D03

If the vacuum is less than 0.6 bar, the pipe (2) connecting to the servo unit must be disconnected from the vacuum gauge, and an appropriate plug (4) fitted to the free end.
Restart the engine: 20 seconds after starting (with the engine idling), the vacuum reading on the vacuum gauge (3) must be over 0.6 bar.
If it is, the fault should be sought in the air circuit or servo unit.
If not, the vacuum unit is faulty and so should be replaced.

Copyright Fiat Auto

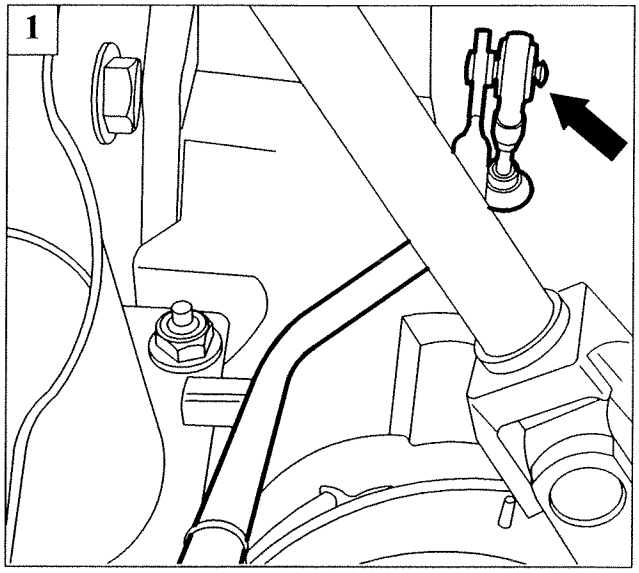

BRAKE PEDAL

Removing-refitting

After removing the clutch pump as described in Section 18 and releasing the servo unit from the pedal assembly, by pulling it from the engine compartment, disconnect the pedal assembly as follows:

1. release the throttle cable, which is a pressure fit, from the accelerator cable;

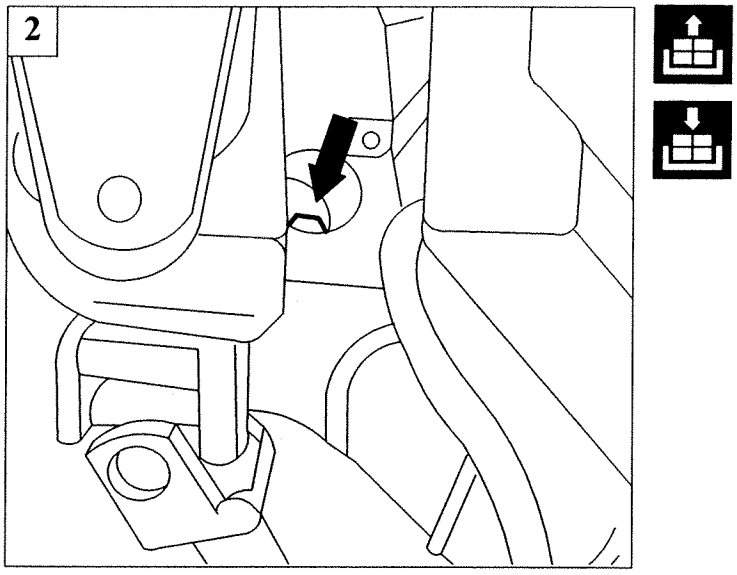

2. undo the pedal assembly's top bolt, then remove the pedal assembly by rotating it as appropriate.

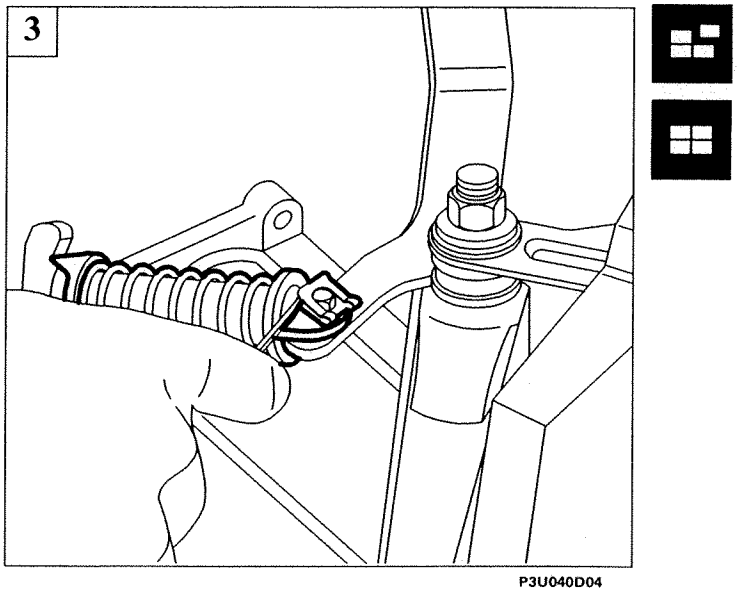

Dismantling-reassembly

3. Withdraw the stop, then remove the pin and remove the clutch pedal return spring;

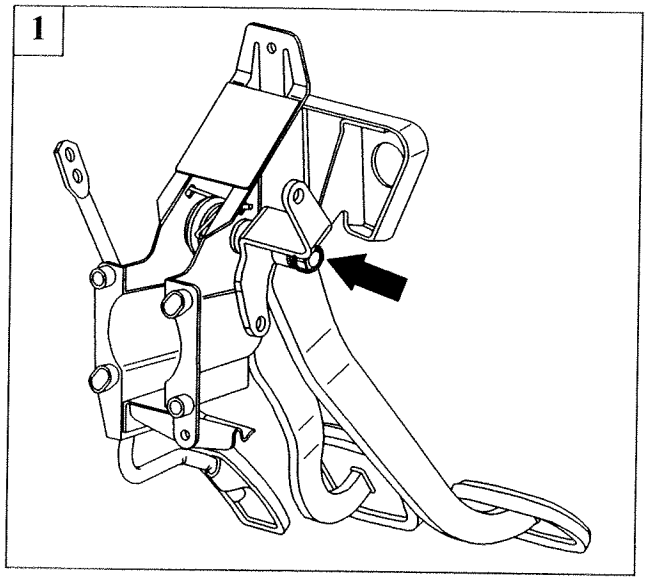

1. undo the bolt which acts as a pin for the brake and clutch pedals;

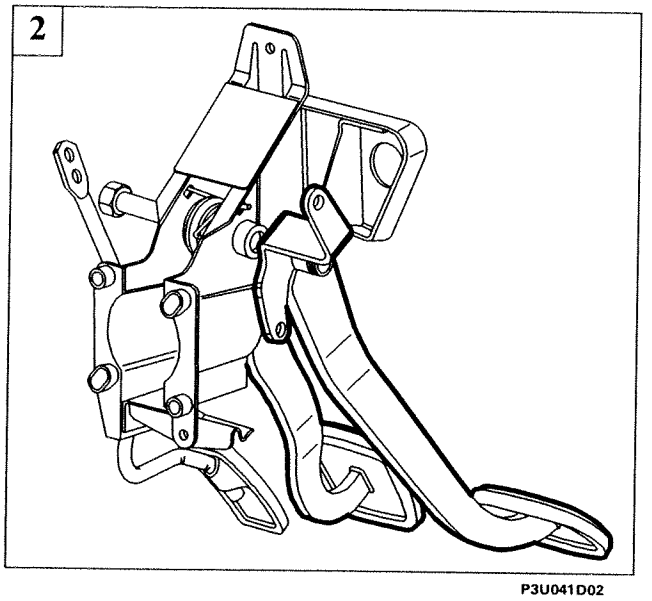

2. withdraw the pin fully to release the clutch and brake pedals;

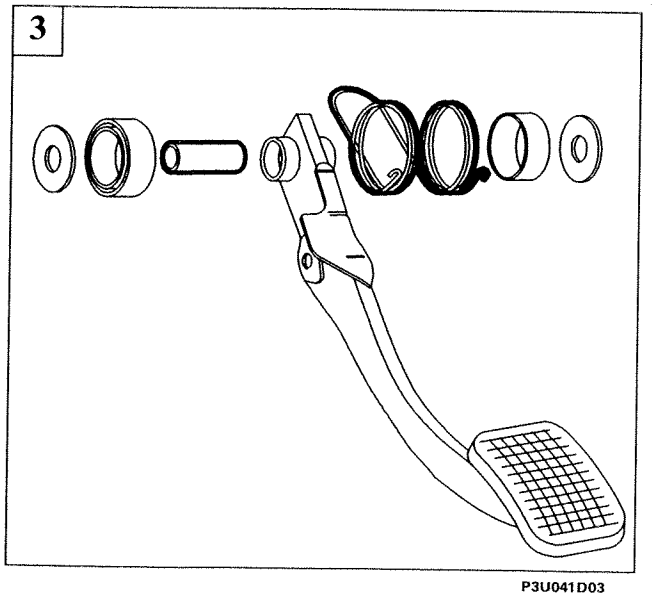

3. remove the spring from the pedal assembly and withdraw the bush from the brake pedal.

When refitting, lubricate the inner and outer surfaces of the bush with grease.

Copyright Fiat Auto

page

ANTI-LOCK BRAKING SYSTEM (A.B.S. Bosch 5.3)

- System structure 1
- Components 2
- Anti-lock braking system operating description 9
- Bosch 5.3 ABS hydraulic system diagram 14
- Bosch 5.3 ABS wiring diagram 15
- Fault diagnosis 16
- Precautions to be observed on vehicles equipped with anti-lock braking systems 18
- Road test procedure to be carried out following repairs to the ABS 18

Copyright Fiat Auto

COPYRIGHT FIAT AUTO

The reproduction, even partial, of the text and illustrations is prohibited.

The information contained in this publication is purely indicative and could be out of date following modifications made by the Manufacturer, at any time, for technical or commercial reasons or in order to conform to legal requirements in the various countries.

Fiat Auto S.p.A.
D.M.C. - M.P.S.
Servizi Post Vendita - Assistenza Tecnica
10040 Volvera - TO - (Italia) - Largo Senatore G.Agnelli, 5
Publication no. 506.475/08 - Maggio 1996 - 440
Printed in Italy - Tip. Europrint - TORINO
order no. 60489725

ANTI-SKID SYSTEM
(A.B.S. Bosch 5.3)

COMPONENTS

The Bosch 5.3 A.B.S. system is derived from the previous 5.0 version and is more compact (easier to fit), lighter and more reliable.
The valves have been made more modular through the use of new microhybrid electronic components. Magnetic flux has been optimised through the use of new more compact valve case shapes and the number of hydraulic components has been reduced through direct moulding of nozzles, which were previously assembled separately.
The main system components are as follows:
- new type of electronic control unit, more powerful and versatile than on previous models;
- hydraulic control unit responsible for modulating braking pressure to the brake calipers by means of eight solenoids, two for each wheel;
- four sensors (2) and (3), one for each wheel, which measure wheel angular rotation speed

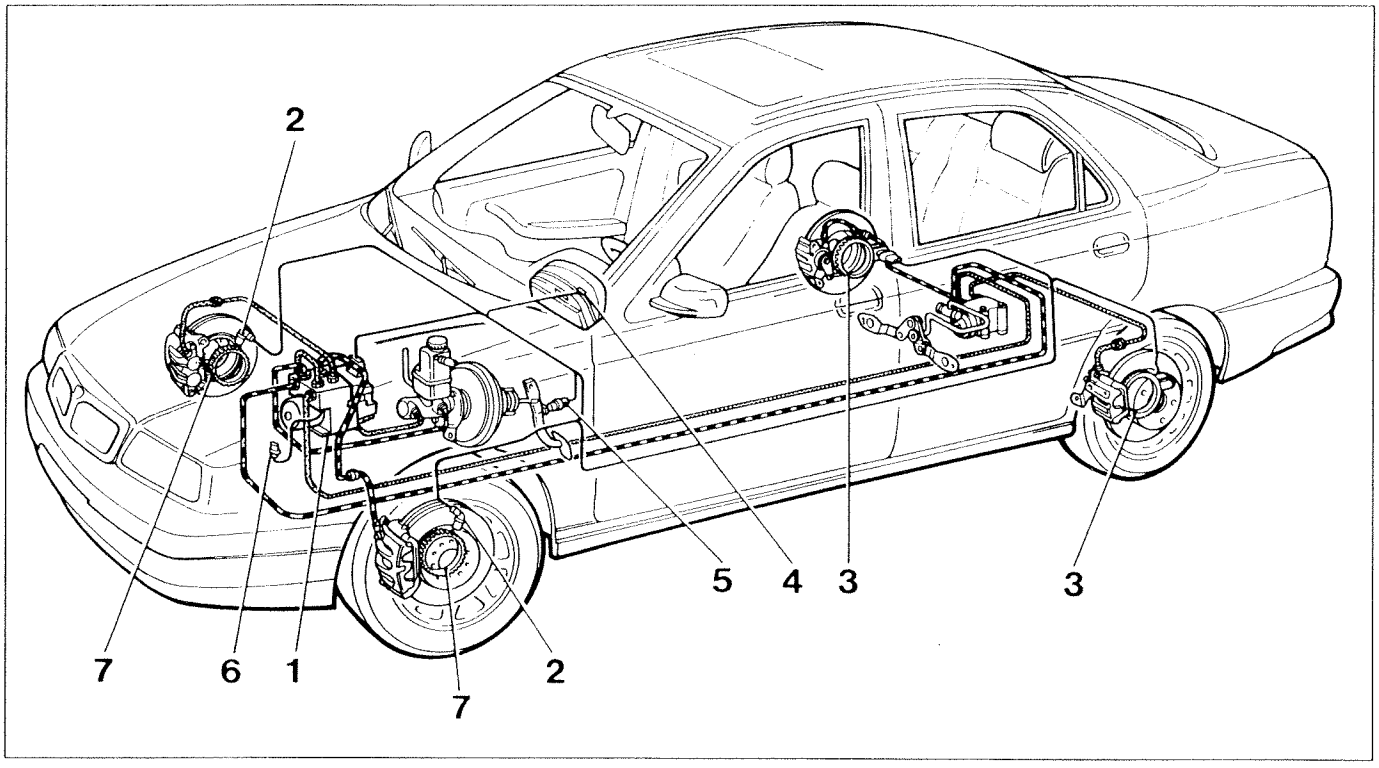

P3U01DA01

Diagram of Bosch 5.3 anti-lock braking system

Hydraulic circuit for right front and left rear brake

Hydraulic circuit for left front and right rear brake

1. Hydraulic control unit with built-in ECU
2. Rpm sensors for right and left front wheels
3. Rpm sensors for right and left rear wheels
4. ABS system failure warning light.
5. Brake light switch
6. Diagnostic socket for Fiat-Lancia Tester or Computerised Test Station
7. Front phonic wheels

Copyright Fiat Auto

The system also includes:
- hydraulic system lines;
- special electrical wiring;
- switch on brake pedal for measuring braking conditions;
- warning light (4), located on the control panel.

When in test mode (see paragraph on "Blink Codes"), the warning light (4) emits a series of blink codes to provide information on faults saved in the control unit CMOS EEPROM memory.

COMPONENTS

Hydraulic control unit

The hydraulic control unit consists of two sections fastened to one another: an electronic control unit and a hydraulic control unit.
The electronic control unit is connected to the wiring of the A.B.S. by means of a multiple connector with 26 terminals, of which 17 are used.
The electronic control unit governs the hydraulic unit by processing signals from the sensors with the aid of programs mapped in its memory.
The hydraulic control unit is connected to the brake pump and ABS components by means of the braking system pipes.
Compared to the previous version, the 5.3 unit is lighter and the valves are smaller. Valve opening and closure mechanism is more effective and size has been reduced further through the use of tiny microhybrid electronic circuits which are about 30% smaller than components used previously.

ELECTRONIC CONTROL UNIT

The electronic control unit is made up of hybrid circuits with integral resistances, diodes, transistors and logical circuits. The system is based on two CMOS microprocessors with 16 K of ROM. Each of these runs the same program independently and monitors the another. Both receive the same input signals and process them independently. The electronic control unit sends an operational control to the hydraulic control unit only when both signals are identical.

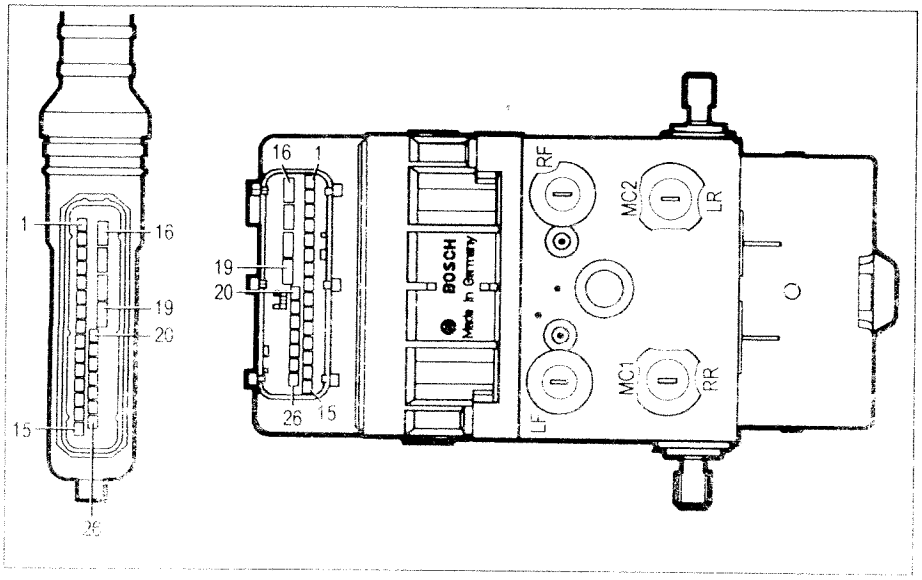

P3U02DA01

Otherwise, if the ABS contains a fault for example, the device cuts itself out and braking takes place in conventional manner. The fault warning light on the instrument panel comes on at the same time.

Fault data are recorded in a non-volatile memory. One of the two microprocessors contains a CMOS EEPROM memory, which saves its contents even if the battery is disconnected. This memory saves fault codes so that they can be read using a tester during service.

Signals (alternating or analogue) sent to the electronic control unit by the rpm sensors are converted into square wave (or digital) signals by the input amplifier.
The frequency of these signals provides the control unit with the corresponding values of speed, acceleration or deceleration for individual wheels.
A reference speed is processed from a combination of individual peripheral wheel speeds. This is continually updated to indicate vehicle speed instant by instant.
When the driver presses the brake pedal, the wheels may decelerate at different rates. The peripheral speeds of individual wheels are compared with the reference speed to monitor slip for each individual wheel.
If braking effort causes one wheel to slip with regard to the others, the electronic control unit commands the hydraulic control unit solenoids to reduce braking effort to the wheel experiencing loss of grip. The affected wheel therefore picks up speed.

NOTE *The peripheral speed of a braked wheel drops at a faster rate than the vehicle speed. With the wheels fully locked by the braking action (peripheral wheel speed = 0) and the vehicle still moving, the difference between these two speeds is maximal.*
This difference is known as "creep" or percentage slip when expressed as a percentage.
Creep 0% = wheel free to turn
Creep 100% = wheel locked and vehicle moving
During braking, the friction coefficient increases if braking occurs with low creep (rolling) and decreases when the tyre slows in relation to the surface until it locks altogether.
A considerable number of practical tests and research have shown maximum braking effort can generally be achieved with creep levels between 5% and 15%, up to a maximum of 20%. These figures mark an optimal range which the anti-lock braking system will tend to keep to regardless of the vehicle type.

The electronic control unit also contains deceleration and acceleration thresholds which should never be exceeded by individual wheels.
The rolling speed of a braked wheel is thus controlled through a systematic, continuous and extremely swift comparison of wheel slip, deceleration and acceleration.

As soon as acceleration/deceleration and combined *split* values are exceeded, the electronic control unit cuts in. Hydraulic unit solenoids are driven through three control stages to reduce, maintain, or restore pressure generated by the driver on the brake pedal to the wheel calipers. Braking status is therefore restored to within specified optimal limits.

These stages give rise to an intermittent but extremely rapid control cycle, which is repeated until the vehicle comes to a halt. The electronic control unit controls the various stages by sending currents of different intensity to the solenoids. The unit also ensures that both rear wheels receive the same braking effort applied to the rear wheel with the greatest tendency to lock, i.e. with the least grip (to ensure better directional stability).

If one of the tyres is deflated, the ABS can cut in to control braking conditions if necessary.

The ABS is also active when the vehicle brakes when reversing.
The device normally stops working at speeds lower than 2.75 km/h.

Because the parameters monitored by the control unit (wheel speed and deceleration) are influenced by wheel/tyre inertia, vehicles fitted with an anti-lock braking system ***must only be fitted with rims, tyres and brake linings recommended by the Manufacturer.***

Copyright Fiat Auto

When chains are fitted, the signals generated by the new rolling conditions are filtered by the control unit so that the anti-lock braking system is not cut out if the vehicle is driven over hard, compact snow.

Under conditions of poor grip and/or incorrect drive torque distribution (aquaplaning), the sensors inform the electronic control unit of the slipper conditions and the ECU cuts in to prevent problems of vehicle stability.

The electronic control unit is equipped with a safety circuit which monitors system efficiency each time the car is about to start off and during motion.
The safety circuit carries out the following self-checks:

1. after inserting the ignition key and for about 4 seconds, it checks the operation of the control unit, the solenoid relays and the sensor connections;

2. after starting the engine, as soon as vehicle speed exceeds 6 km/h, it operates the solenoids and scavenging pump to check operation. It also checks that all four speed signals are present;

3. whenever the vehicle exceeds a speed of 24 km/h from a standing start, it checks that all 4 speed signals are present;

4. during motion, it continually compares wheel peripheral speed with a calculated reference speed, checks memory conditions and governs the operation of both relays;

5. battery voltage is monitored during motion.

If one of these faults is detected, the anti-lock braking system turns itself off without affecting the normal operation of the conventional braking system. A warning light on the control panel comes on to inform the driver of the situation.

Electronic control unit operation

When the vehicle is in motion (speed in excess of 6 km/h), rpm sensors (4) keep the electronic control unit constantly informed of the rolling conditions of individual wheels. If braking does not take place, the control unit identifies vehicle speed from the sensor signals.

When the driver presses the brake pedal, the vehicle no longer travels at constant speed and begins to slow down. Due to the braking effort, the wheels begin to slow down at a faster rate than the vehicle and to different extents.

Under these conditions, the alternating voltage signals generated by the rpm sensors (4) and directed to the input amplifier (5) are converted to square wave signals corresponding to speed values. Wheel speed is detected in this way. The speed values are processed by an acceleration limiter before being transferred to the main program (8).

The microprocessors, which run the same program and monitor one another reciprocally, process a reference speed from a combination of individual wheel speeds. This is kept continually updated and indicates vehicle speed at every moment during the braking manoeuvre.

Microprocessors (1) compare individual wheel speeds with a reference speed to monitor slip signals from each wheel.

If the braking effort applied by the driver continues to increase in order to achieve the maximum available friction coefficient, deceleration also increases and wheel speed falls further to the point where the vehicle's grip on the ground is affected (wheels tending to lock).
When this situation occurs, i.e. instability limits are exceeded, microprocessors (1) instigate a control cycle through output amplifier (7). The amplifier generates control signals which earth the circuits of solenoids (6) FL-FR (front) RL-RR (rear). In this way, the hydraulic control unit is able to modulate braking pressure by implementing pressure reduction, maintenance and increase stages. The cycle comes to an end when values are restored to within the stability limit, i.e. creep is reduced to restore grip on the ground.
The electronic control unit is activated by the ignition (+15) through a 10A fuse (17) (on terminal 15). This is fitted with two built-in, non-replaceable relays. The relays are equipped with diodes to reduce voltage surges and protected by a 60A fuse (16).

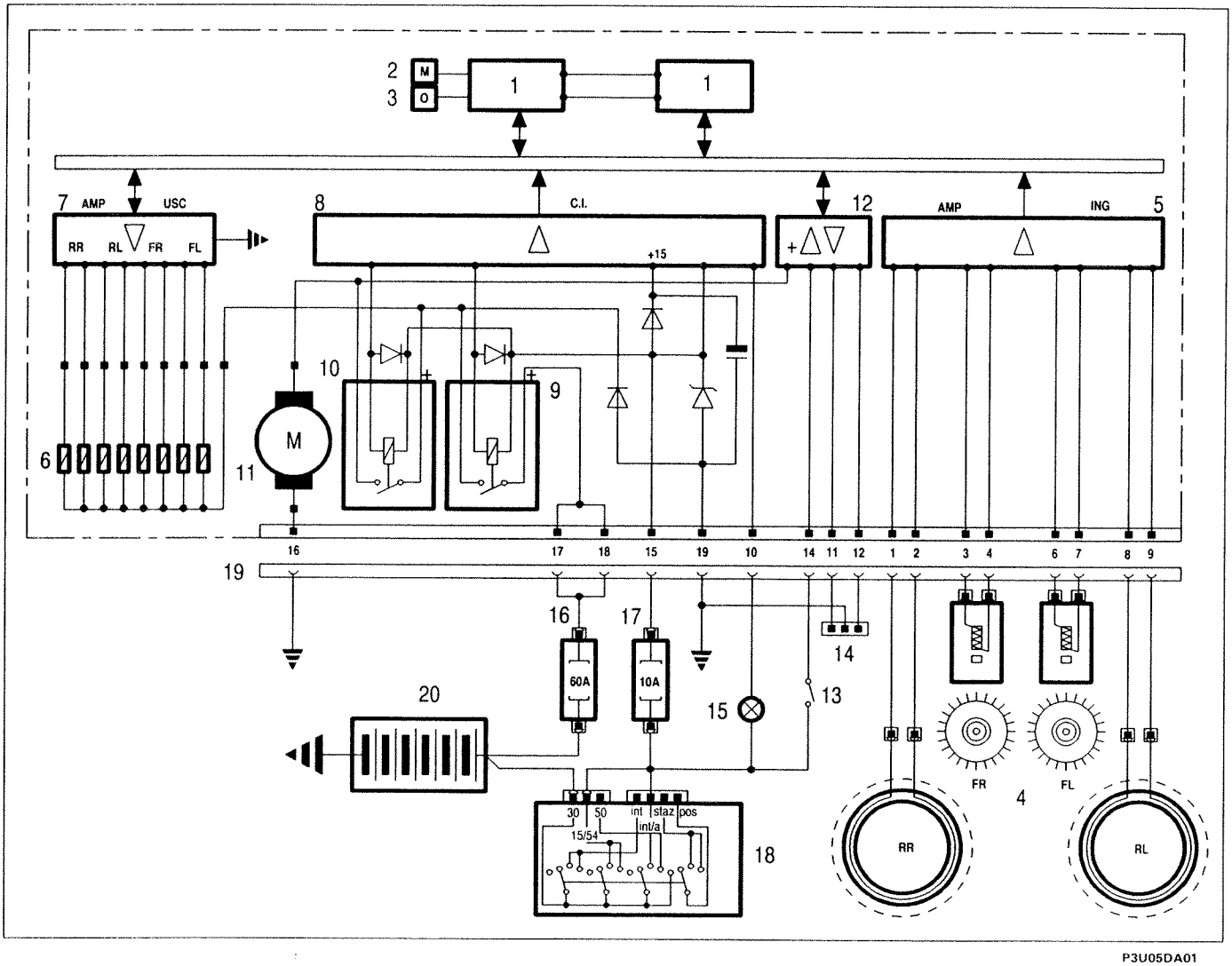

P3U05DA01

1. Microprocessors
2. EEPROM memory
3. CMOS EEPROM memory
4. Wheel rpm sensors
5. Input amplifier
6. Solenoids
7. Output amplifier
8. Integrated circuit with memory
9. Solenoid supply relay
10. Scavenging pump supply relay
11. Scavenging pump
12. Tester/signal interface
13. Braking light switch (STOP)
14. Tester socket
15. 1.2 W ABS warning light
16. Fuse 60A
17. Fuse 10A
18. Ignition switch
19. Connector
20. Battery

Copyright Fiat Auto

Relay (9) supplies eight solenoids (6), two for each brake caliper.
Relay (10) supplies scavenger pump (11).
The integrated circuit with memory (8) governs two relays (9) and (10) and controls the operation of fault indication warning light (15) (1.2 W bulb).

A signal from the switch on the brake pedal lets the control unit know that the driver is braking. This information is useful not only for controlling the braking manoeuvre but also under specific conditions. For example, a stronger braking force is applied if the vehicle is accelerated so suddenly that the wheels skid, or in the case of an uneven road surface (corrugations, steps) which may lead wheel speed to change due to reasons unconnected with the current braking manoeuvre.
Under these conditions, microprocessors (1) implement a strategy based on wheel speed changes at these specific moments in order to restore current braking parameters to correct levels. Because these braking control conditions are highly specific, system efficiency is not impaired if the switch on the brake pedal fails to connect with the control unit. The warning light does not come on and the ABS system is not deactivated.

Module (12) transmits data through tester socket (14) to the tester.

Identification of terminals on electronic control unit and connector

N°	Destination	N°	Destination
1	To right rear rpm sensor -	15	To 10A fuse, terminal +15 of the ignition switch
2	To right rear rpm sensor +		
3	To right front rpm sensor -	16	To earth
4	To right front rpm sensor +	17	To 60A fuse battery positive +12V
5	Free	18	To 60A fuse battery positive +12V
6	To left front rpm sensor -	19	To earth
7	To left front rpm sensor +	20	Free
8	To left rear rpm sensor -	21	Free
9	To left rear rpm sensor +	22	Free
10	To fault warning light	23	Free
11	To K line tester socket	24	Free
12	To L line tester socket	25	Free
13	Free	26	Free
14	To brake light switch		

RPM SENSORS

The rpm sensors are inductive type:
- the front sensors (Bosch DF6) are located on the fixed parts of the suspension system;
- the rear sensors (SKF) are built into the wheel hubs.

For a detailed description of the rpm sensors, see the section on the Bosch 5.0 ABS at the beginning of this chapter.

HYDRAULIC CONTROL UNIT

The hydraulic control unit is connected to the brake pump and brake caliper cylinders through the brake system pipes. This unit and the electronic control unit make up the electro-hydraulic control unit.
The hydraulic control unit is responsible for altering brake fluid pressure in the brake calipers when control signals are received from the electronic control unit.
It consists of eight two-way solenoids (two for each hydraulic circuit) and a dual circuit scavenging pump (2).
The eight solenoids and the scavenging pump are driven by the electronic control unit on the basis of signals from the four rpm sensors. In particular, the pump allows brake fluid to be taken up during the pressure reduction stage so that more fluid is made available upstream of the solenoids for the subsequent pressure increase stage.
The accumulators allow brake fluid to be absorbed during the pressure reduction stage.
The unit is connected to the braking system by fittings marked with stamped codes as shown in the figure.
The electro-hydraulic control unit cannot be serviced and cannot become faulty unless tampered with. A new unit must be fitted if old one is found to be faulty.
New units are supplied full of brake fluid (DOT 4) and with solenoids inactive. The braking system is bled and refilled in the same way as a conventional system.

NOTE *To avoid mistakes when connecting the various braking system circuits during repairs, the hydraulic modulator unit connections are different sizes (M10x1 and M12x1). Fittings can also be identified by stamped codes as shown in the figure.*

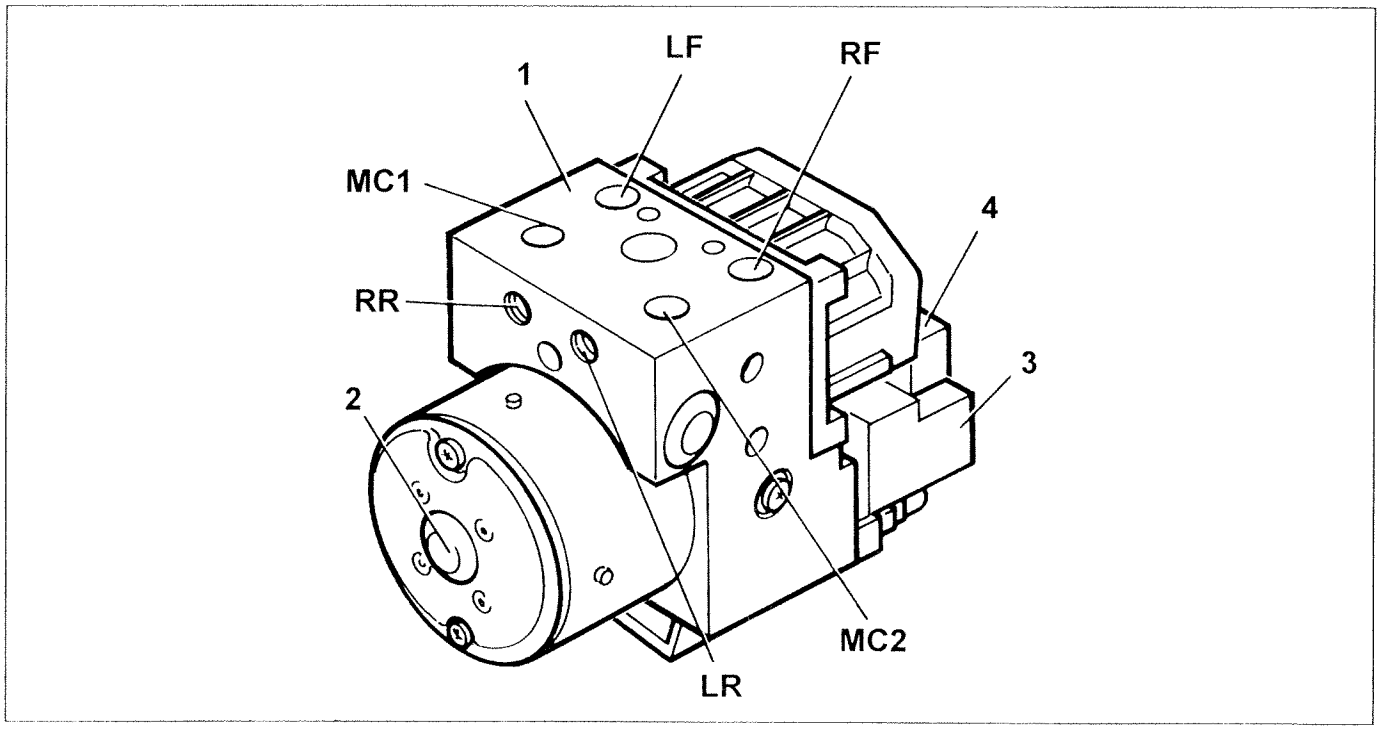

P3U07DA01

Identification of hydraulic control unit outputs

MC1. Inlet fitting from brake pump M10x1
MC2. Inlet fitting from brake pump M10x1
LF. Outlet fitting to left front brake caliper M10x1
LR. Outlet fitting to left rear brake caliper M10x1
RF. Outlet fitting to right front brake caliper M12x1
RR. Outlet fitting to right rear brake caliper M12x1

1. Hydraulic control unit
2. Scavenging pump
3. Electronic control unit
4. 26 terminal connector

Copyright Fiat Auto

ABS FAILURE WARNING LIGHT.

With the ignition key turned to MARCIA, the red ABS failure warning light (A) comes on.

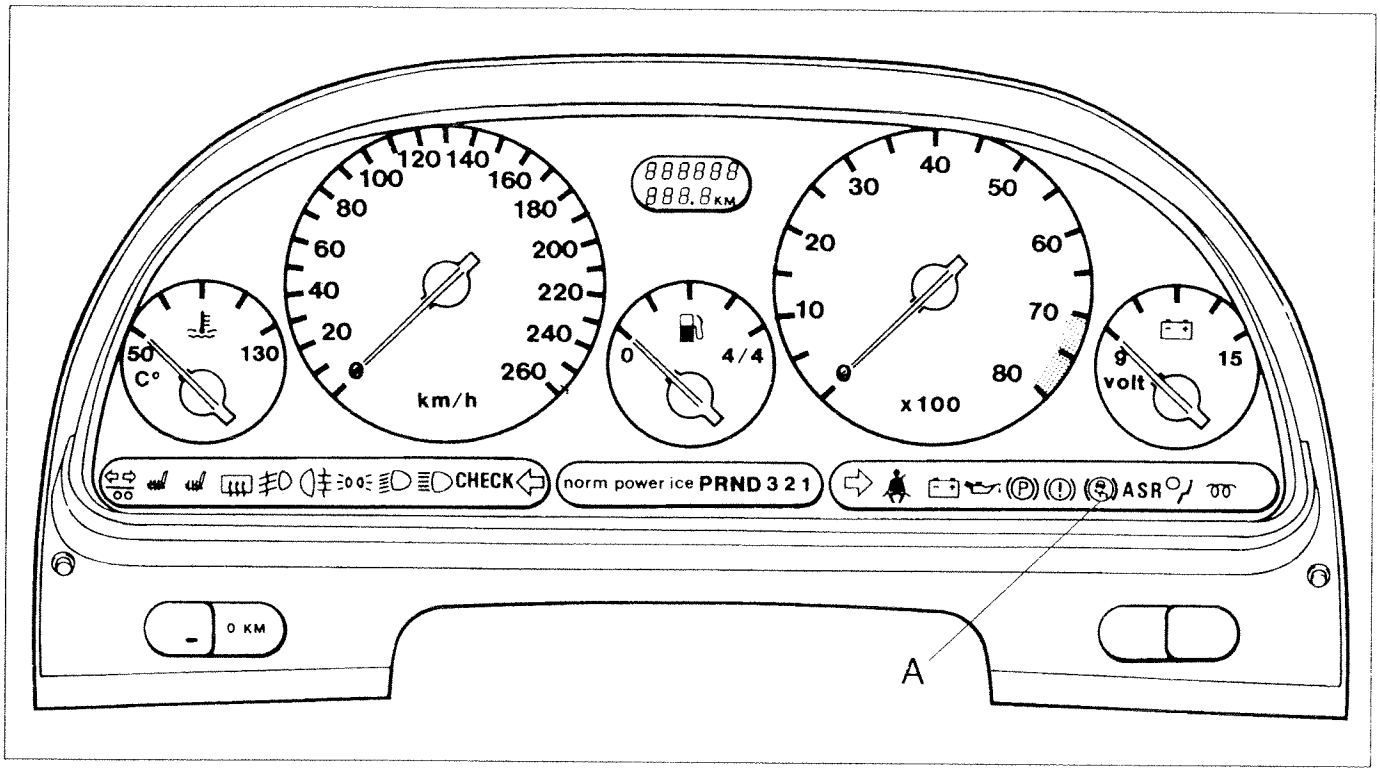

P3U012D01

After about 4 seconds (if no faults are detected), warning light (A) goes off.

If warning light (A) stays on, one or more components of the A.B.S. must be faulty. Under these conditions, the A.B.S. is deactivated and braking can therefore take place only in conventional manner.

If the warning light (A) does not come on, (with the ignition on), the fault may lie in the warning light bulb, the electrical connection between ignition and warning light or the control unit connection (terminal 10).
The ABS system comes on at about 3 km/h.
At a speed of about 6 km/h, the system test cycle begins. If the outcome of system component tests is positive, the warning light stays off. If the test result is negative, the warning light comes on and the ABS is deativated automatically. Braking takes place in conventional manner.
If the battery is not fully charged, the warning light may come on and the ABS be deactivated. For example, when travelling at low speed around town with all services activated.

After the vehicle has been at a standstill with the engine running (eg. at a traffic light), the test cycle is repeated when vehicle speed reaches 24 km/h. The scavenging pump electric circuit, which was tested during the 1st start-up test, is cut out.

Under conditions of *aquaplaning* the sensors let the control unit know that the situation is anomalous during normal motion with the wheels unbraked. Under these conditions, the drive wheels tend to turn at a faster rate than the vehicle itself during motion, while the driven wheels turn at a slower rate.

Under these conditions, the control unit issues an inappropriate command.
In this situation, the ABS cuts itself out temporarily for such a short time that the warning light need not necessarily come on. ABS efficiency is automatically restored as soon as the *aquaplaning* ceases.

ANTI-LOCK BRAKE SYSTEM OPERATING DESCRIPTION

Rest position

Each branch of the Bosch 5.3 ABS is fitted with two two-way solenoids. All solenoids are managed by control unit (1).
when deactivated, charging solenoid (9) (not earthed from the control unit) is open so that that fluid can flow through to the brake caliper.

Pressure is maintained by supplying this valve with electricity so that it closes.

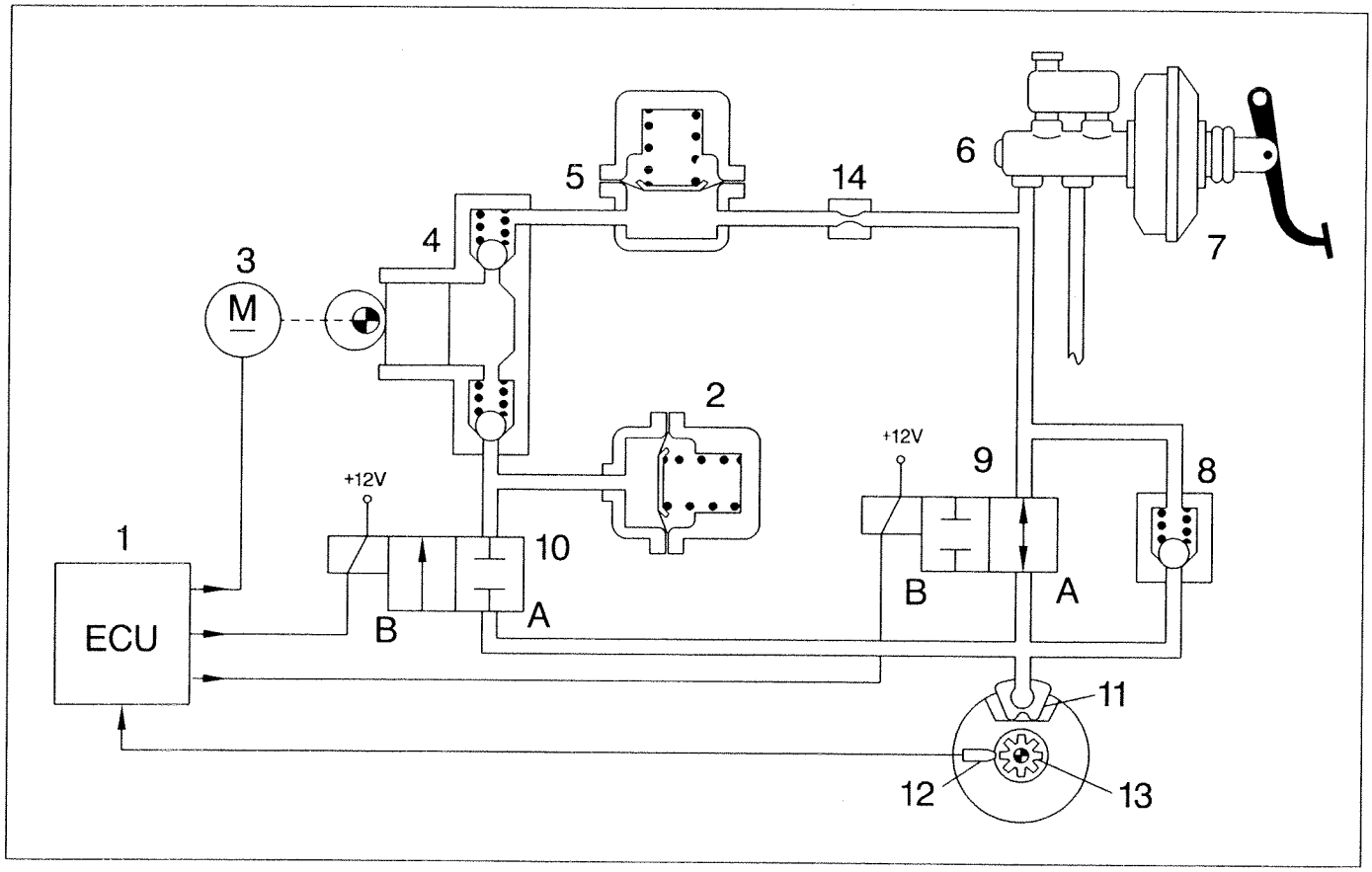

P3U013D01

1. Electronic control unit
2. Low pressure accumulator (reservoir)
3. Scavenging pump motor
4. Scavenging pump
5. High pressure accumulator (damping chamber)
6. Brake pump
7. Servo brake
8. Quick pressure reduction valve
9. Charging solenoid
10. Discharge solenoid
11. Brake calipers
12. Rpm sensor
13. Phonic wheel
14. Restriction

When discharge solenoid (10) is deactivated (not earthed from the control unit), it closes so that fluid cannot drain to the low pressure accumulator (2).

Accumulators (2) and (5) temporarily store brake fluid made available during the pressure reduction stage.

Scavenging pump (4) directs brake fluid flowing out of the brake calipers during the pressure reduction stage to the brake pump through the relevant accumulator.

Copyright Fiat Auto

According to signals received from the rpm sensors on the front and rear wheels, the electronic control unit governs the electro-hydraulic control unit which in turn alters the presure of brake fluid directed to the calipers through three stages: pressure increase, maintenance or reduction.

Pressure increase stage

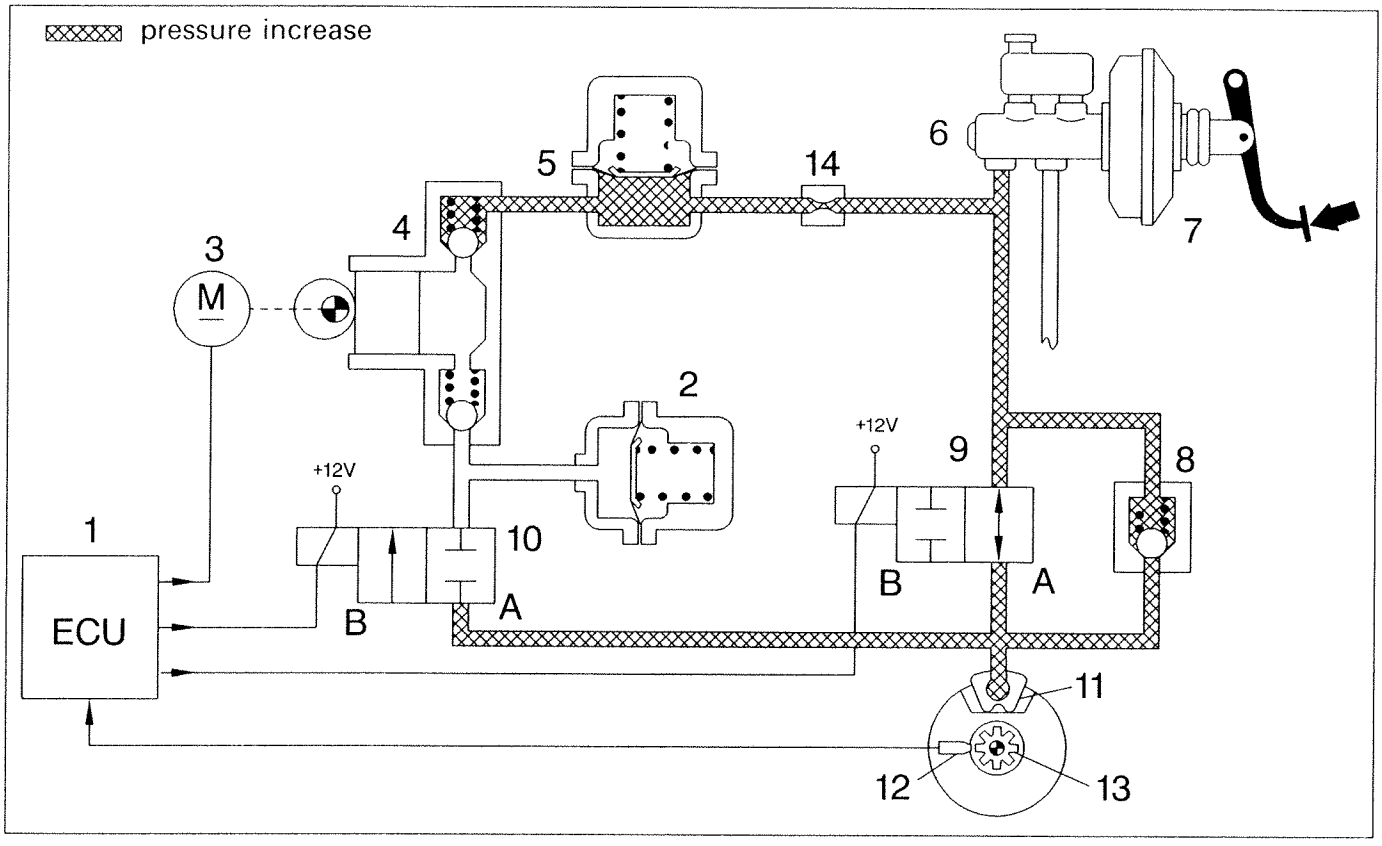

P3U014D01

1. Electronic control unit
2. Low pressure accumulator (reservoir)
3. Scavenging pump motor
4. Scavenging pump
5. High pressure accumulator (damping chamber)
6. Brake pump
7. Servo brake
8. Quick pressure reduction valve
9. Charge solenoid
10. Discharge solenoid
11. Brake calipers
12. Rpm sensor
13. Phonic wheel
14. Restriction

When the vehicle driver presses the brake pedal, pressure generated by the brake pump (6) reaches the brake calipers without undergoing changes because solenoids (9) and (10) of the hydraulic unit are not earthed from the electronic control unit.

When braking effort increases, wheel deceleration also increases. This brings about faster vehicle deceleration (i.e. wheel creep increases).
Creep level should never exceed a certain threshold. Above this, the wheel loses its grip on the ground and begins to slide. Directionality is lost and stopping distances increase.

Rpm sensor (12) indicates when deceleration reaches levels which could impair wheel grip on the ground. Electronic control unit (1) now controls hydraulic unit solenoids to reduce braking effort and allow wheel speed to increase in order to restore grip.

Pressure maintenance stage

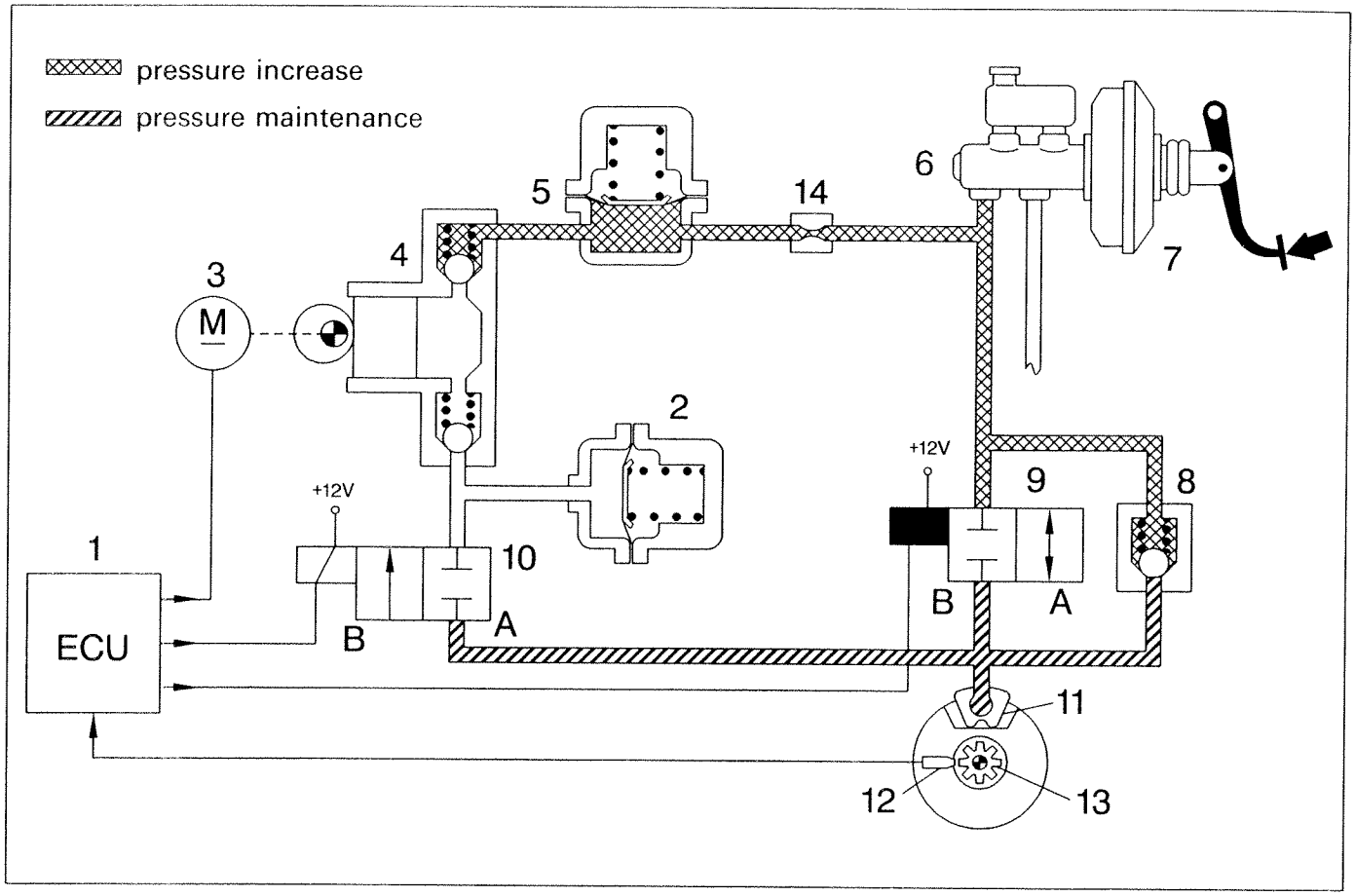

P3U015D01

1. Electronic control unit
2. Low pressure accumulator (reservoir)
3. Scavenging pump motor
4. Scavenging pump
5. High pressure accumulator (damping chamber)
6. Brake pump
7. Servo brake
8. Quick pressure reduction valve
9. Charge solenoid
10. Discharge solenoid
11. Brake calipers
12. Rpm sensor
13. Phonic wheel
14. Restriction

During this stage, electronic control unit (1) earths charging solenoid (9) which closes; discharge solenoid (10) is already closed because it is not earthed.

The hydraulic connection between brake pump (6) and brake calipers (11) is cut (resting position). Pressure in brake caliper (11) is maintained constant at the previous value, regardless of the pressure on the brake pedal.

Although braking effort keeps slowing the wheel down, wheel speed actually alters according to grip on the ground until the signal from rpm sensor (12) records a reading comparable with the reference speed calculated by electronic control unit (1).
The control unit now moves on from the pressure maintenance stage to the increase stage (if the wheel is accelerating) or the decrease stage (if the wheel is locking).

Copyright Fiat Auto

Pressure reduction stage

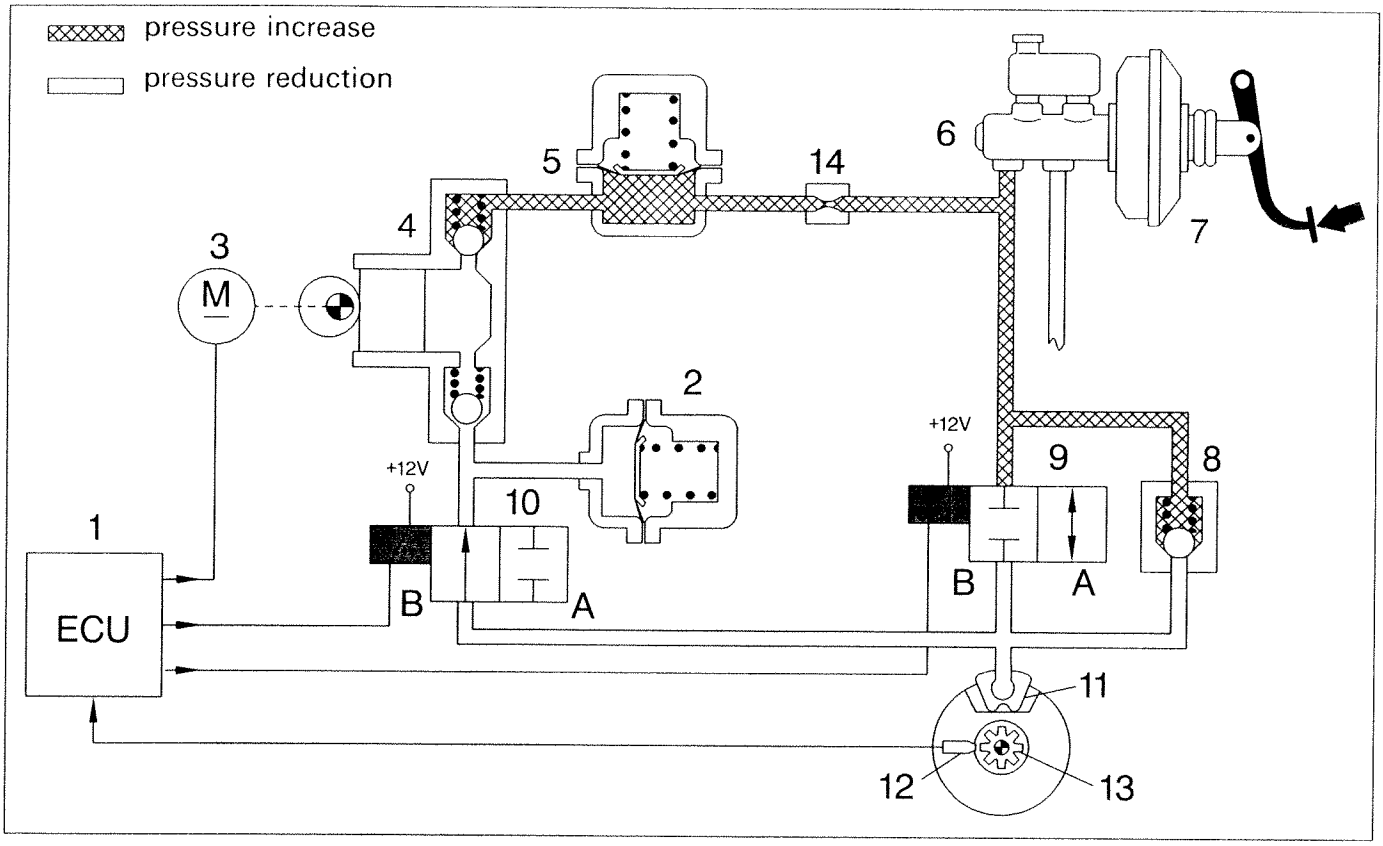

P3U016D01

1. Electronic control unit
2. Low pressure accumulator (reservoir)
3. Scavenging pump motor
4. Scavenging pump
5. High pressure accumulator (damping chamber)
6. Brake pump
7. Servo brake
8. Quick pressure reduction valve
9. Charging solenoid
10. Discharge solenoid
11. Brake calipers
12. Rpm sensor
13. Phonic wheel
14. Restriction

Control unit (1) records wheel tendency to lock and activates the hydraulic control unit to keep wheel deceleration within permitted threshold levels.

Electronic control unit (1) earths input solenoid (9) and output solenoid (10).
Input solenoid (9) remains closed to keep the connection between brake pump (6) and brake caliper (11) open. Output solenoid (10) opens to ensure a hydraulic connection between brake caliper (11), low pressure acccumulator (2) and scavenger pump (4) in order to remove a portion of the fluid from brake caliper (11) and reduce pressure on the caliper. At the same time, electronic control unit (1) activates engine (3) controlling scavenging pump (4), so that fluid removed from brake caliper (11) can be re-introduced into the main circuit.

The circuit accumulator (2) or low pressure reservoir stores part of the brake fluid removed from the calipers. Brake fluid is taken up through the circuit of scavenging pump (4) before being drawn up and sent to the main circuit of brake pump (6) through damping chamber (5) and restriction (14).
A series of pressure waves (or hydraulic surges) generated during this stage is damped by damping chamber (5) and restriction (14).

Slight surges on the brake pedal are quite normal during operation of the A.B.S. system. As braking effort falls during this stage, the wheel tends to return to the reference speed calculated by electronic control unit (1).

The type of braking is therefore intermittent or in steps: a repetitive series of stages governed by braked wheel rolling speed. This takes place so quickly and at such high frequency that the driver is not even aware of the cycle. Because the device works so quickly, wheel inertia also helps to ensure the wheel does not slip too much.

On vehicles without an A.B.S., the driver is able to operate the brake pedal at a rate of 2 cycles per second (2 presses and 2 releases).
The cycles increase from 4 - 10 per second with an A.B.S. (according to grip).
The A.B.S. normally stops working at speeds less than 2.75 km/h to allow the wheels to lock fully when the vehicle comes to a standstill.

NOTE *The scavenging pump is dual circuit, free piston type controlled by an electric motor which turns continually during scavenging stages. Pistons are not fitted to the electric motor but moved through their stroke by the cam only when the brake fluid arrives. The pump may therefore only move through a pressure stroke. A suction stroke is not possible due to the lack of mechanical connection between motor and pump*

Brake pedal release

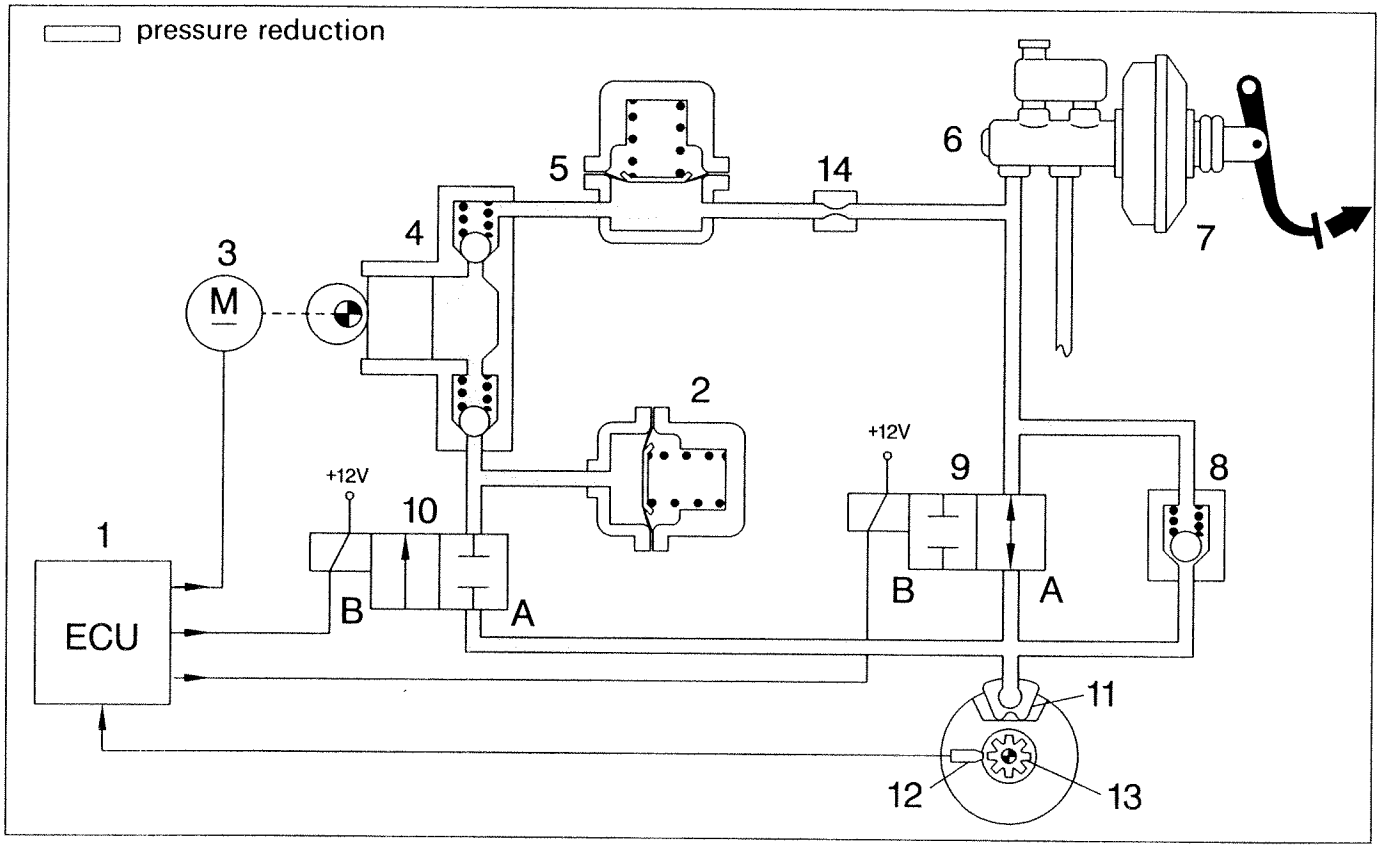

P3U017D01

1. Electronic control unit
2. Low pressure accumulator (reservoir)
3. Scavenging pump motor
4. Scavenging pump
5. High pressure accumulator (damping chamber)
6. Brake pump
7. Servo brake
8. Quick pressure reduction valve
9. Charging solenoid
10. Discharge solenoid
11. Brake calipers
12. Rpm sensor
13. Phonic wheel
14. Restriction

To allow quick pressure reduction on the brake caliper (11) when the brake pedal is released, the system is fitted with a check valve (8) in parallel with input solenoid (9).

Copyright Fiat Auto

BOSCH 5.3 ABS HYDRAULIC SYSTEM DIAGRAM

Diagonal connection between brake calipers

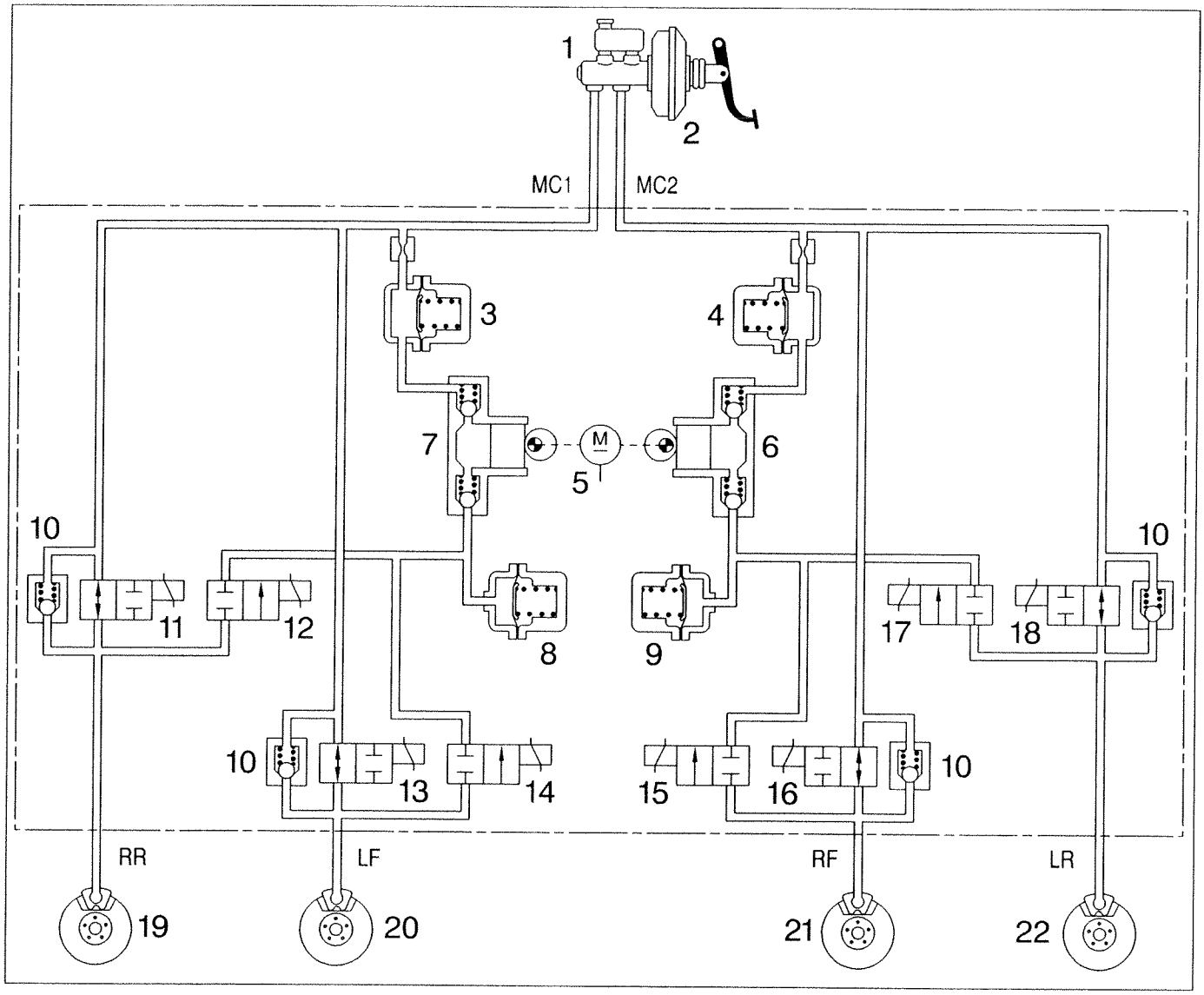

P3U018D01

1. Brake pump
2. Servo brake
3. High pressure accumulator (damping chamber)
4. High pressure accumulator (damping chamber)
5. Scavenging pump control motor
6. Scavenging pump
7. Scavenging pump
8. Low pressure accumulator (reservoir)
9. Low pressure accumulator (reservoir)
10. Quick pressure reduction valve
11. Right rear input solenoid
12. Right rear output solenoid
13. Left front input solenoid
14. Left front output solenoid
15. Right front input solenoid
16. Right front output solenoid
17. Left rear input solenoid
18. Left rear output solenoid
19. Right rear brake caliper
20. Left front brake caliper
21. Right front brake caliper
22. Left rear brake caliper

MC1. 1st brake pump stage inlet fitting
MC2. 2nd brake pump stage inlet fitting

RR. Outlet fitting to right rear brake caliper
FL. Outlet fitting to left front brake caliper
FR. Outlet fitting to right front brake caliper
RL. Outlet fitting to left rear brake caliper

BOSCH 5.3 ABS SYSTEM WIRING DIAGRAM

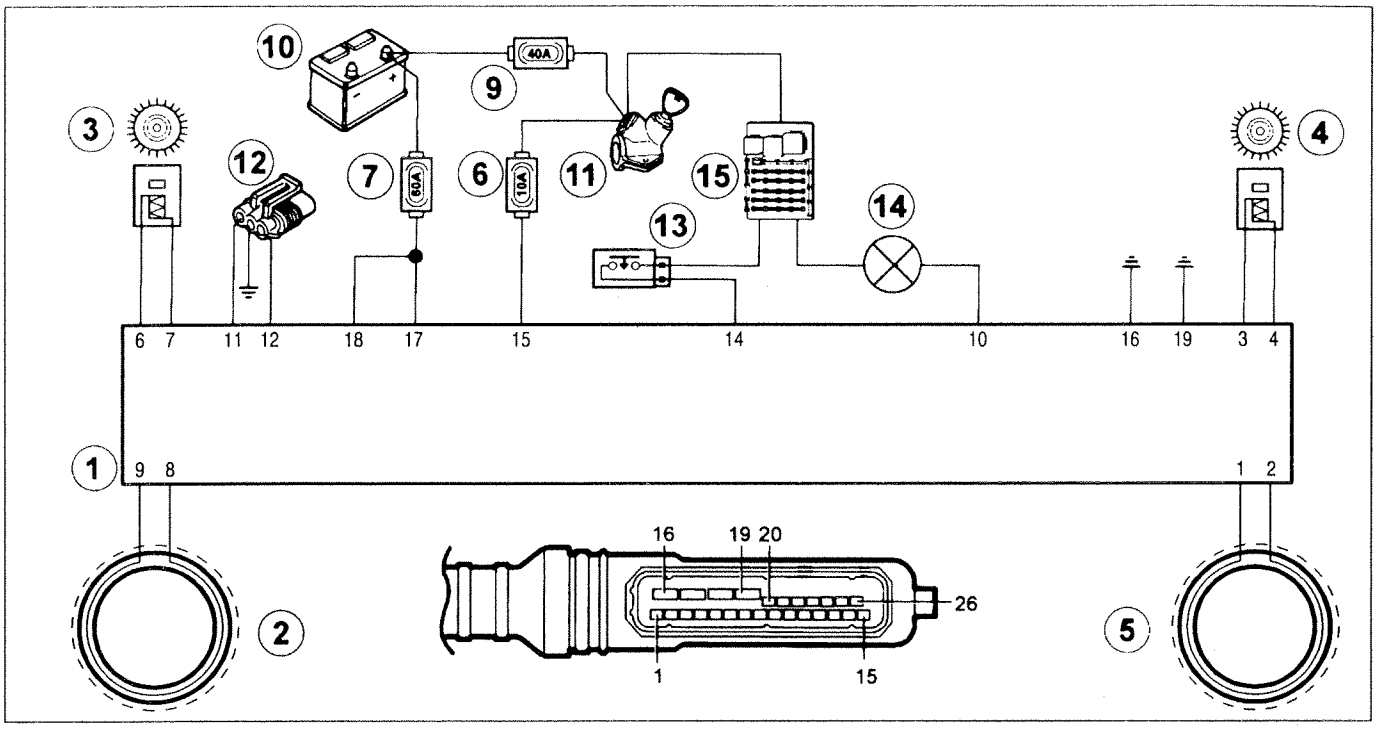

P3U15DA01

1. Electronic control unit
2. Left rear rpm sensor (RL)
3. Left front rpm sensor (FL)
4. Right front rpm sensor (FR)
5. Right rear rpm sensor (RR)
6. Fuse 10A
7. Fuse 60A
9. Fuse protecting services activated by ignition key
10. Battery
11. Ignition switch
12. Diagnostic socket
13. Braking light switch
14. ABS warning light.
15. Junction unit

The electrical system of the Bosch 5.3 ABS system is specific to the version. Electrical connections between individual components such as the four wheel rpm sensors, fault warning light, brake light switch, tester socket, inputs etc., are combined to form a wiring bundle with a multiple connector with 26 terminals.
The housing of this wiring bundle is water-proofed because the presence of oxidation or corrosion could give rise to high contact resistances. An excessive voltage drop (in relation to the ECU) could occur in certain leads and cause the entire system to malfunction. In this case, the system would turn itself off too soon or the electromagnetic valves and scavenging pump would only work in restricted manner. The final effect would be over-long switching times and a lower output.
The electronic unit (1) is supplied directly from battery (10) through a 60A fuse (7), at terminals (17) and (18), and from the ignition switch (11) through the 10A fuse (6) on terminal (15). Terminals (16) and (19) are connected to earth.
The control unit contains two relays. Although these cannot be replaced, their operation is guaranteed. One of these microprocessor-controlled relays activates the eight soleniods and the other activates the scavenging pump.
The brake pedal switch circuit is connected to the control unit through terminal (14) when the brake pedal is pressed. The control unit uses this connection to control braking under specific conditions. The switch is not essential and failure to connect will not impair system efficiency. Faults are not indicated by the warning light coming on for this reason.

Copyright Fiat Auto

FAULT DIAGNOSIS

Faults in the Bosch 5.3 ABS system may be searched for and identified by connecting one of the following tools to the tester socket shown in the figure on the previous page:

- Fiat-Lancia Tester,
- S.D.C. - Computerised Testing Station,
- Examiner.

When the Tester is connected, the A.B.S. is deactivated and the fault warning light stays on.

If the control unit reveals a fault, the system is deactivated and the fault warning light comes on. The defect is saved in a permanent memory; the Tester deletes the error at the end of the testing session or it disappears automatically after the vehicle has been started 20 times.
If two errors occur at the same time, the control unit is able to save only one.

Blink codes

The ABS 5.3 is able to test itself and indicate faults detected with the aid of external devices.

The system displays a series of fault codes to the operator by means of a blinking warning light on the instrument panel.
These decimal codes are made up of two figures. The light blinks an appropriate number of times to display the amount in tens and then goes on to display the number of units after a gap of 1.2 ± 0.1 seconds.

This procedure is not activated if faults are present:

- in control unit tester line L,
- in the warning light on the instrument panel,
- in parts of the control unit responsible for this form of self-diagnosis.

The procedure must be carried out with the vehicle at a standstill or travelling at less than 0 km/h; Otherwise the blink codes are automatically interrupted by the system, which memorises the event and causes a warning light on the control panel to come on.

The fault code indicator activation procedure must be carefully followed to ensure effective use:

1. Connect tester socket line L to earth (lead colour AB).
2. Turn the ignition key to MAR.
3. The control unit activates the procedure and the warning light stays off.
4. Once 3.2 seconds have elapsed following procedure activation, the system emits a blink code to indicate that the procedure has been activated three times (blink code 12).
5. After a further 3.2 seconds have elapsed, the system begins to emit all the fault codes in the memory. Each code is repeated three times with a gap of 3.2 seconds between one code and the next.
6. Once all the fault codes in the memory have been emitted, the system begins the sequence again from step 4). Blink code 12 is emitted to indicate the procedure has begun and the fault codes are then repeated.
7. The procedure is halted (this operation may be carried out at any stage without affecting subsequent system operation) by disconnecting tester line L from the vehicle earth.

After a further 2 seconds, the system automatically returns to normal service status.

Blink code specifications are as follows:

- Blink frequency: 1.25 ± 5% Hz
- Warning light ignition time: 0.4 ± 0.02 s
- Warning light deactivation time: 0.4 ± 0.02 s
- Gap between start of procedure and emission of fault codes: 3.2 ± 0.2 s
- Gap between fault code emissions: 3,2 ± 0,2 s
- Gap between emission of tens and emission of units during the same fault code: 3.2 ± 0.2 s

Blink code table

Code	*Code description*
12	Start fault code indication procedure
16	LH front charging solenoid faulty
17	RH front charging solenoid faulty
19	Solenoid supply relay faulty
25	Phonic wheel (any one) damaged
26	LH rear charging solenoid faulty
27	RH rear charging solenoid faulty
28	LH front discharge solenoid faulty
29	RH front discharge solenoid faulty
31	LH rear discharge solenoid faulty
32	RH rear discharge solenoid faulty
35	Scavenging pump faulty
37	Brake pedal switch inefficient
39	LH front wheel speed sensor signal missing
41	LH front wheel speed sensor signal discontinuous or irregular
42	RH front wheel speed sensor signal missing
43	RH front wheel speed sensor signal discontinuous or irregular
44	LH rear wheel speed sensor signal missing
45	LH rear wheel speed sensor signal discontinuous or irregular
46	RH rear wheel speed sensor signal missing
47	RH rear wheel speed sensor signal discontinuous or irregular
48	Battery voltage insufficient
55	Electronic control unit faulty
56	Blink code activation procedure error
74	Warning light cable on instrument panel inefficient

Copyright Fiat Auto

INSTRUCTIONS TO BE OBSERVED ON VEHICLES FITTED WITH ANTI-LOCK BRAKING SYSTEMS

Disconnect the electronic control unit connector before carrying out welding work using an electrical welder.

If the battery is removed, tighten the battery terminals properly when refitting.

When replacing the electronic control unit, the entire hydraulic unit must be removed for reasons of space and in order not to damage the inner connector.

Before removing the electronic control unit, disconnect the battery negative lead.

Whenever a new hydraulic unit, rpm sensor, electronic control unit or wiring is fitted (particularly after an accident), check the entire ABS system using a Tester.

After all repairs to the ABS system or braking system hydraulic circuit, fill using DOT 4 brake fluid and bleed. Check the seal at all connection points.

New hydraulic control units are provided full of DOT 4 brake fluid and with solenoids not supplied. The brake system is bled and filled in the same way as a conventional brake system, except that the operation takes longer.

Check that the pipes do not come into contact with the body at any point. This avoids damage to the pipe protection and also prevents noise transmission during operation of the ABS.
If connection pipes require loosening-removal, check for leaks in the ABS system.



Do not add mineral oil to the brake circuit, because this could damage all the seals.
If mineral oil enters the system by accident, replace the following:
- *hydraulic unit,*
- *brake pump,*
- *calipers.*

PROCEDURE FOR ROAD TEST TO BE CARRIED OUT FOLLOWING REPAIRS TO THE ANTI-LOCK BRAKING SYSTEM

After any repair involving the anti-lock braking system electrical circuit or rpm sensors, whether due to specific repairs to the ABS system or removal and replacement of mechanical parts (e.g. spring-damper unit, constant velocity joints, drive shafts and wheel hubs), a very short road test must be carried out as follows:

1. Accelerate the vehicle to a speed greater than 12 km/h and maintain this speed. This will allow the electronic control unit to run a dynamic check on the sensors and detect any faults, inefficient contacts, incorrect positioning or the lack of a phonic wheel.
2. If the warning light does not reveal any defects after carrying out the previous operation, continue the test at a speed of 50 - 60 km/h for a period of 10 minutes. Use the brakes as normal but avoid abrupt braking manoeuvres. This stage of the test allows the electronic control unit to tell whether an inappropriate phonic wheel is present.

page

POWER STEERING BOX
- Removing-refitting 1

POWER STEERING PUMP
- Removing 5
- Refitting 6

STEERING COLUMN ASSEMBLY
- Removing-refitting 7
- Dismantling 10
- Refitting 11

POWER-ASSISTED STEERING
- Description and operation 12

Copyright Fiat Auto

COPYRIGHT Fiat Auto S.p.A.

Reproduction of all or part of the text and illustrations is prohibited.

The information in this publication is intended as a guide and could be superseded by modifications introduced by the Manufacturer at any time for technical and commercial reasons or in accordance with local regulations.

Fiat Auto S.p.A.
Direzione Marketing Commerciale
Direzione Post-Vendita - Servizi Assistenziali
10134 TURIN (Italy) - Corso E. Giambone, 33
Print no. 506.475/01 - Ottobre 1994 - 500
Printed in Italy - Tip. Europrint - Torino

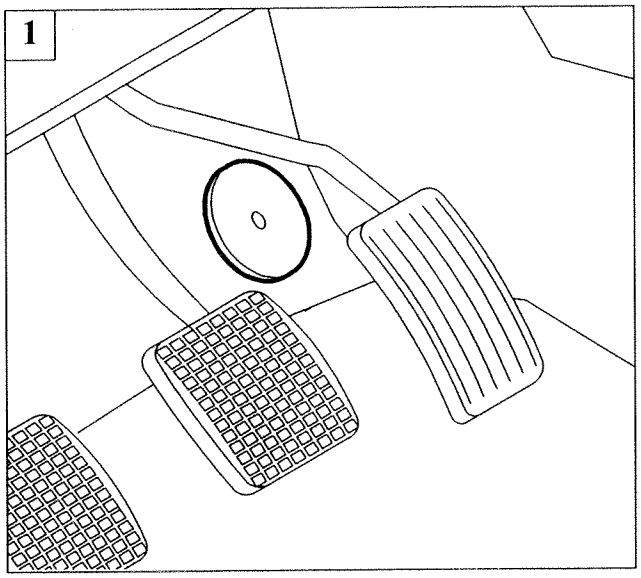

P3U001F01

REMOVING-REFITTING

Work from inside the car, removing the trim cover under the dashboard on the left and the guard below, as described in Section 70, then:

1. remove the accelerator pedal travel limit stop and push aside the carpet;

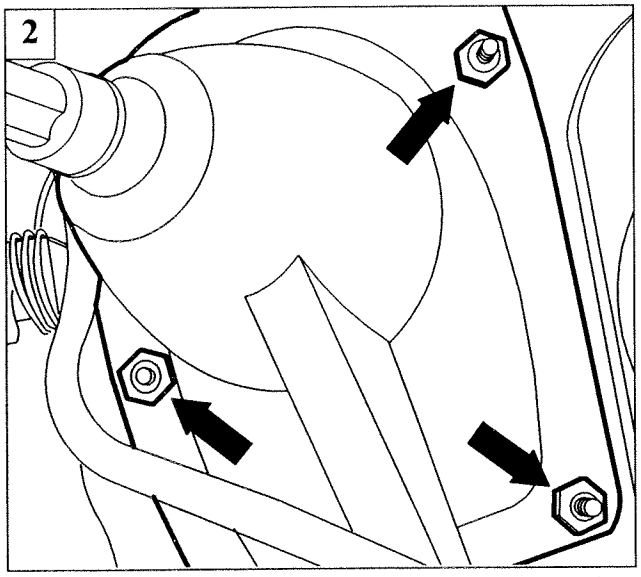

P3U001F02

2. undo the bolts on the universal joint hood;
3. undo the bolt securing the universal joint to the steering pinion;
4. undo the bolts and remove the universal joint hood, engine side.

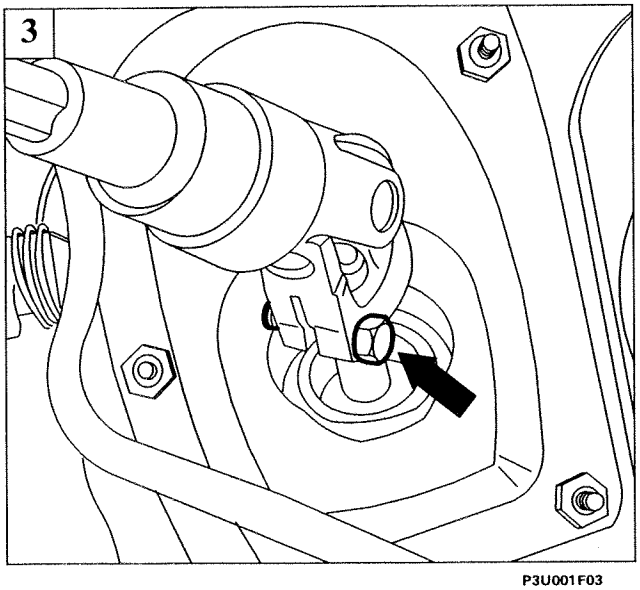

P3U001F03

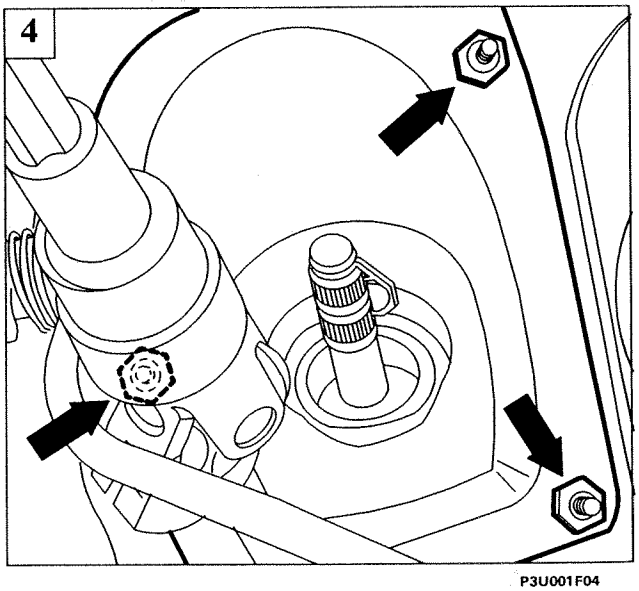

P3U001F04

Copyright Fiat Auto

41.

1

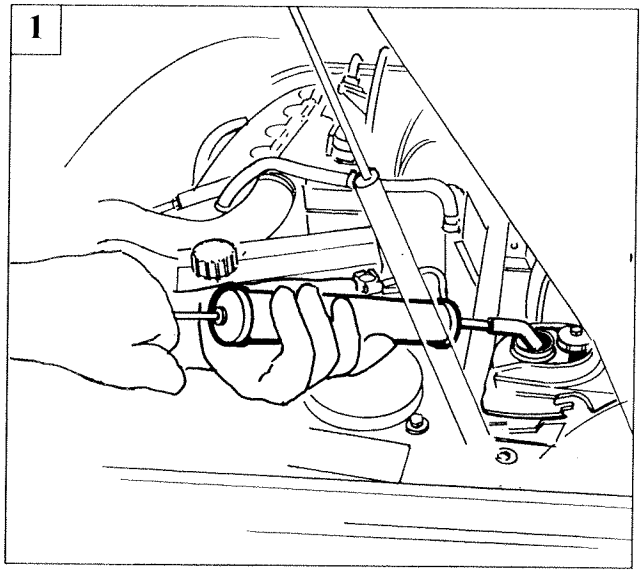

P3U002F01

2

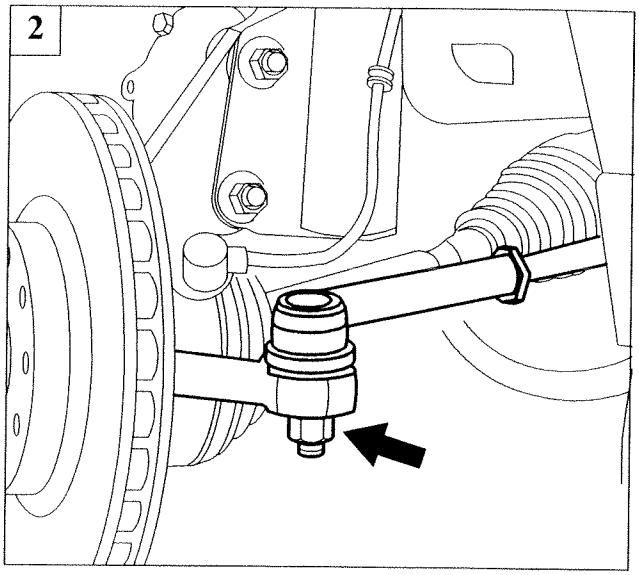

P3U002F02

3

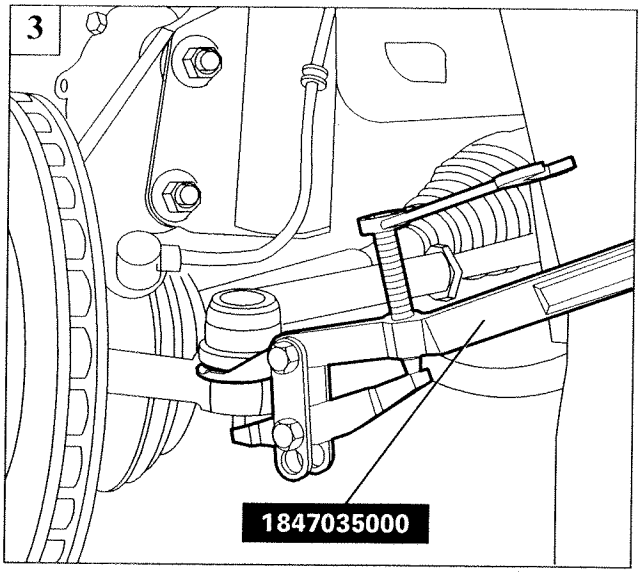

P3U002F03

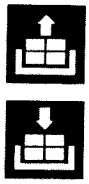

Place the vehicle on ramps and remove the front wheels, remove the additional plastic wheelarches from both sides of the vehicle, and then:

1. drain the fluid from the power steering system;
2. undo the nut securing the track rod end pin to the vertical link;
3. using tool 1847035000, remove the track rod end pin from the vertical link;
4. remove the engine bottom guard, then remove the exhaust pipe first section;

4

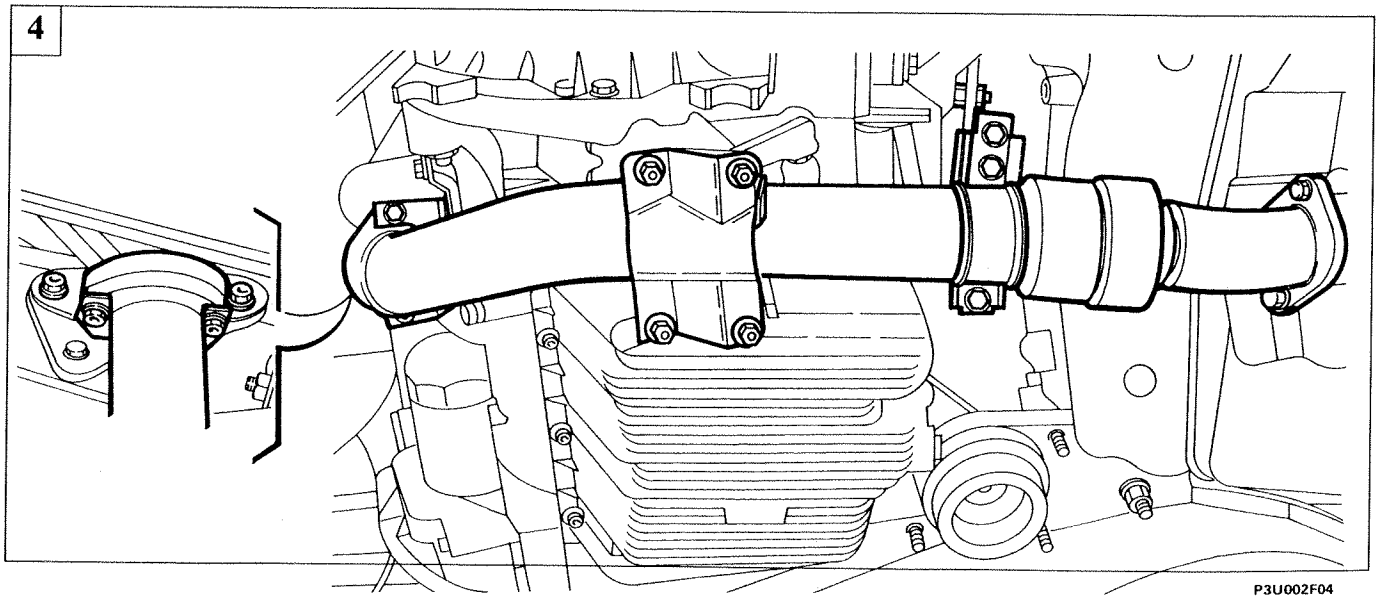

P3U002F04

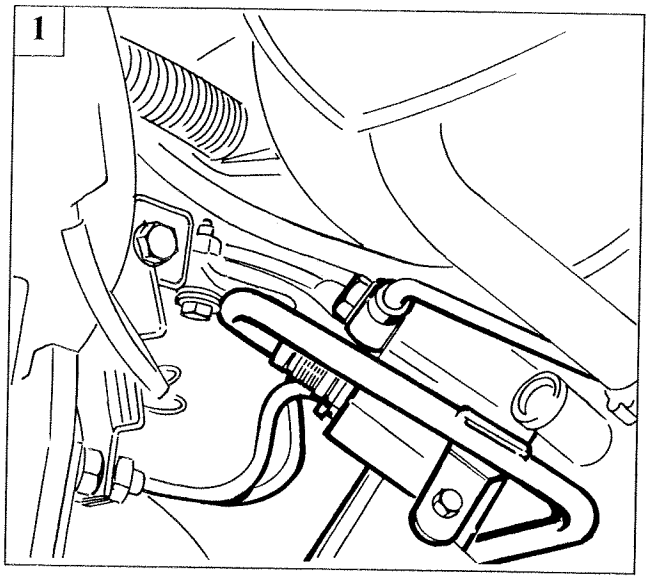

P3U003F01

1. disconnect the connectors on the steering box after undoing the bolt on the bracket (fluid return pipe to reservoir and fluid pipe from pump);

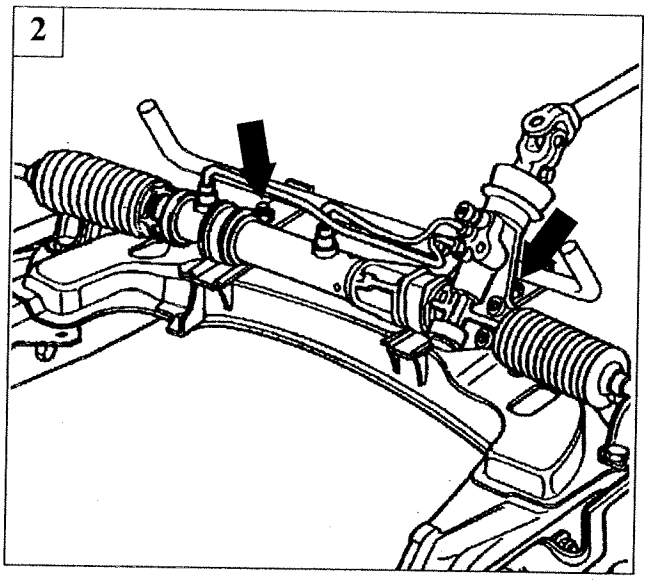

P3U003F02

2. undo the bolts on the rigid pipe mounting bracket (from reservoir to pump);
3. undo the bolts securing the power steering box to the chassis;
4. undo the power steering box from the left of the vehicle;

Check the front wheel toe-in whenever the steering box is removed and refitted.

NOTE *To refit, reverse the procedure for removal.*

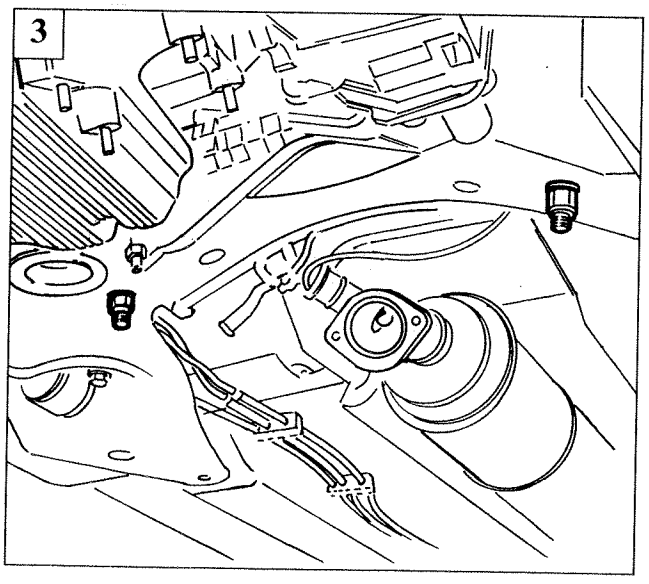

P3U003F03

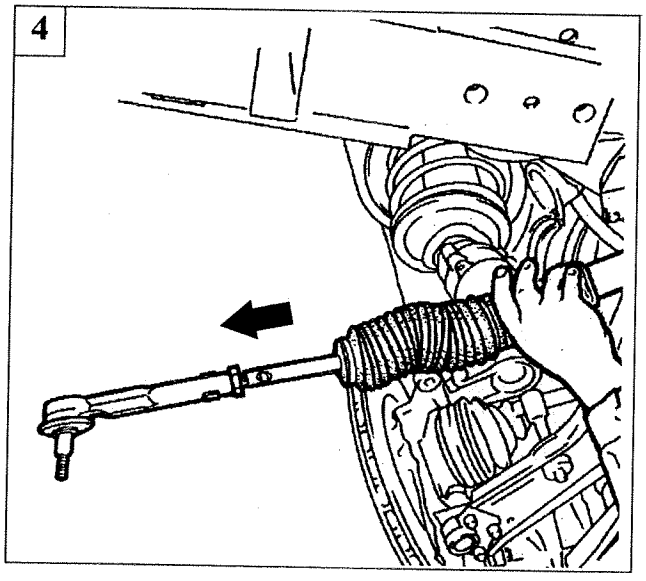

P3U003F04

Copyright Fiat Auto

41.

Components of the steering box supplied as spare parts

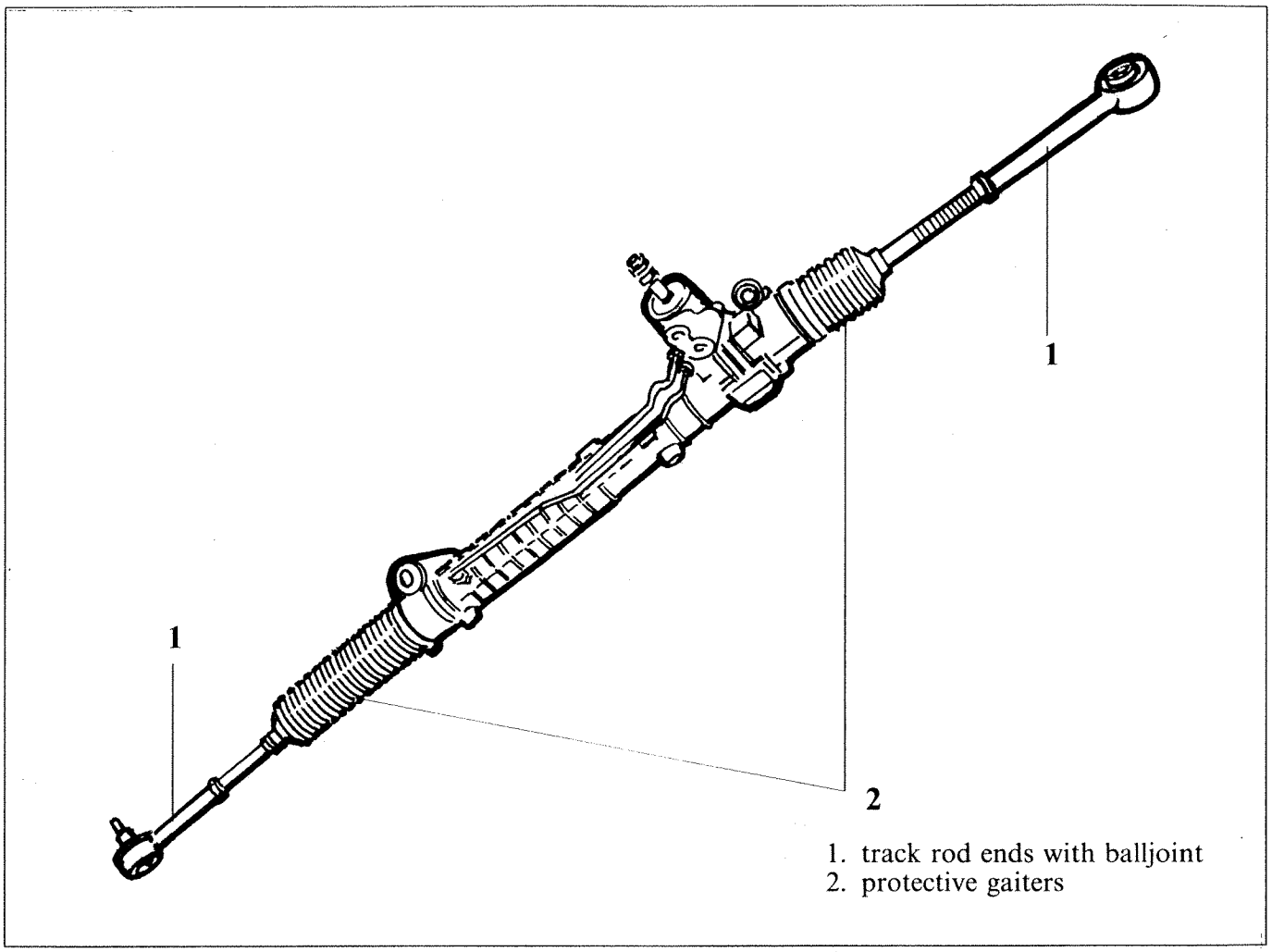

P3U004F01

1. dismantle the track rod end with balljoint from the track rod by undoing the lock nut;

2. undo the clips and remove the protective gaiters;

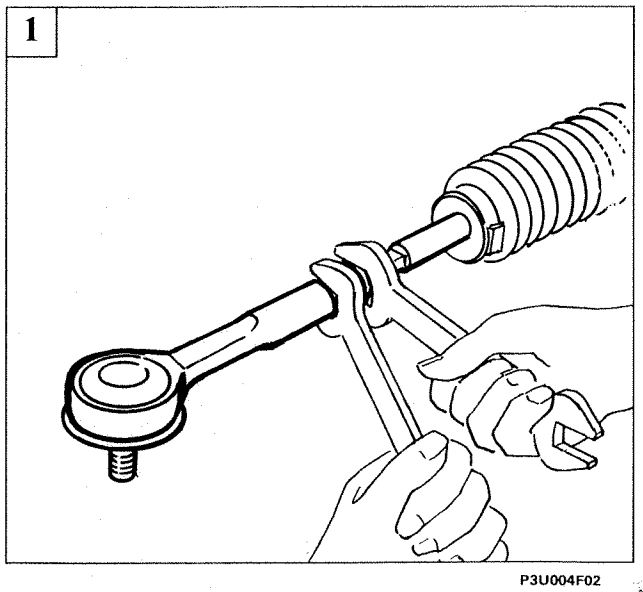

P3U004F02

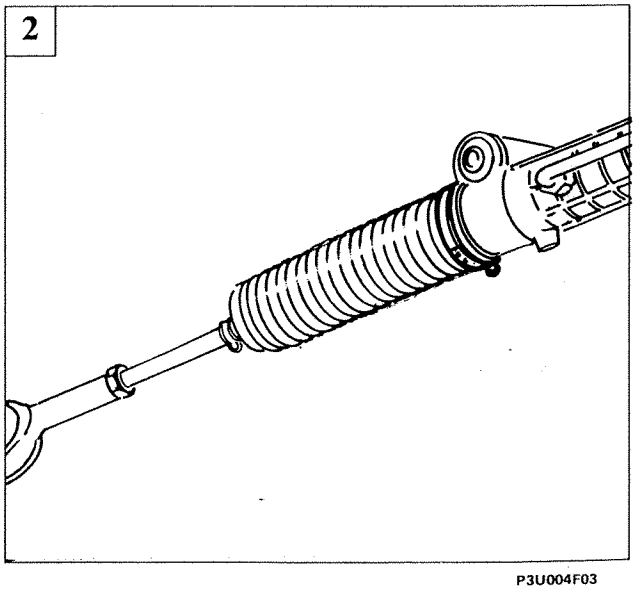

P3U004F03

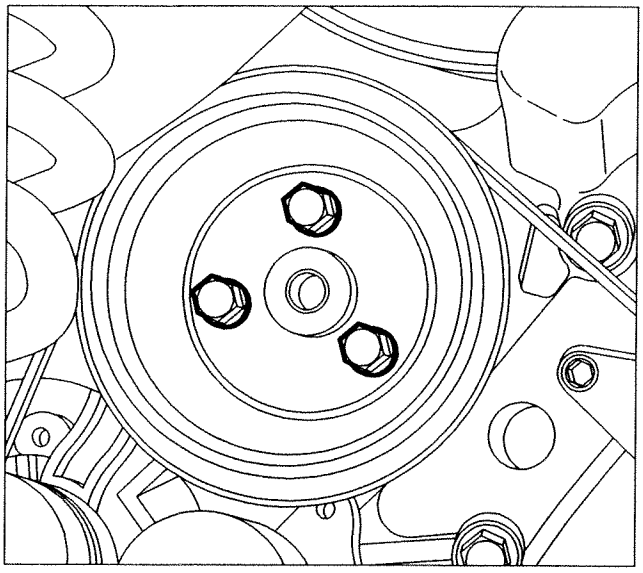

P3U005F01

REMOVING

To remove the power steering pump, carry out the following operations:
- undo the bolts securing the pulley to the power-steering pump;

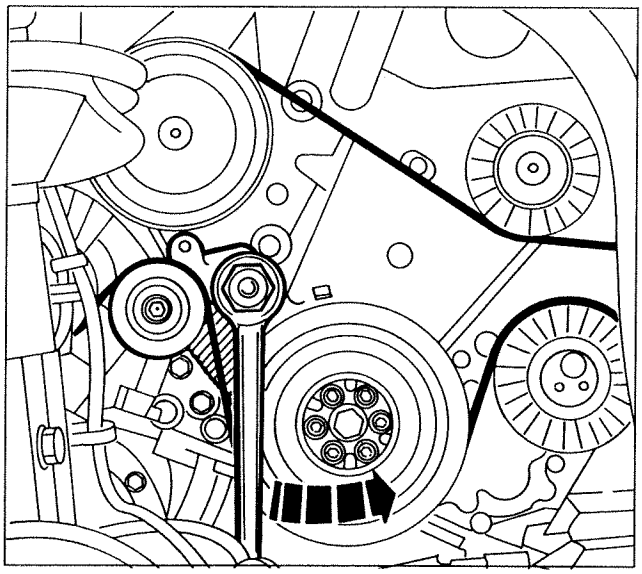

P3U005F02

- adjust the tensioner to slacken the belt tension, then prise off the belt and remove the pulley;

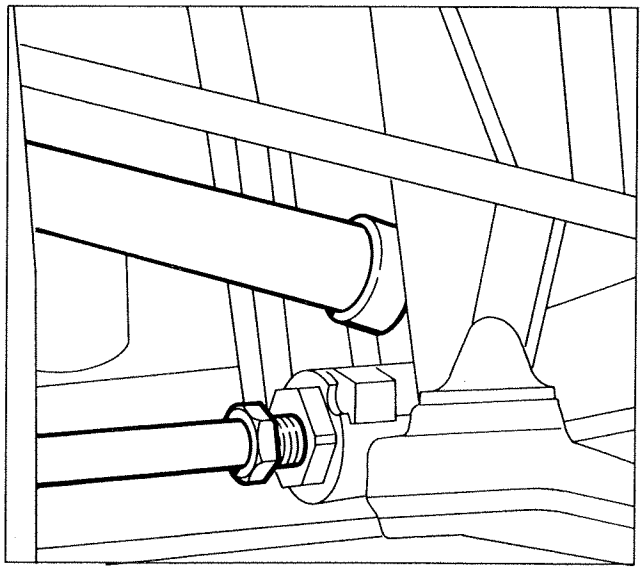

P3U005F03

- disconnect the pipes on the pump (fluid pipe from reservoir and fluid pipe to power steering box);

Copyright Fiat Auto

41.

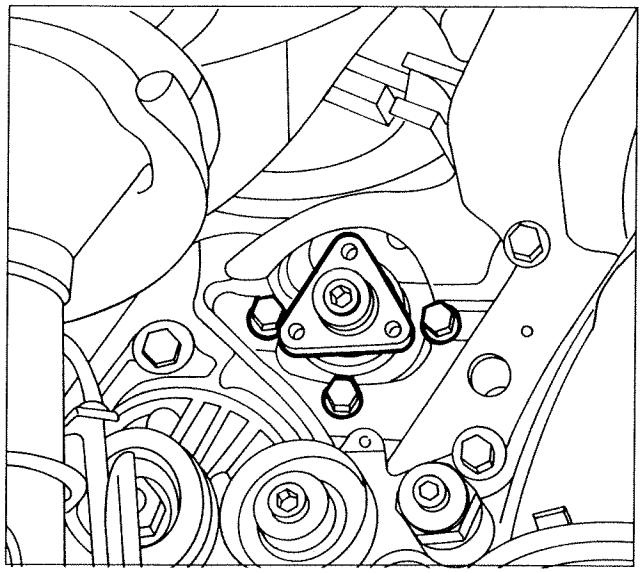
P3U006F01

- undo the bolts securing the power steering pump;

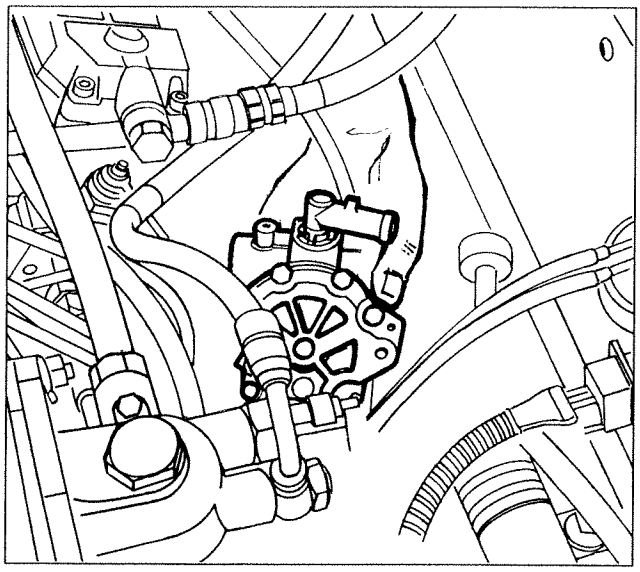
P3U006F02

- remove the power steering pump;

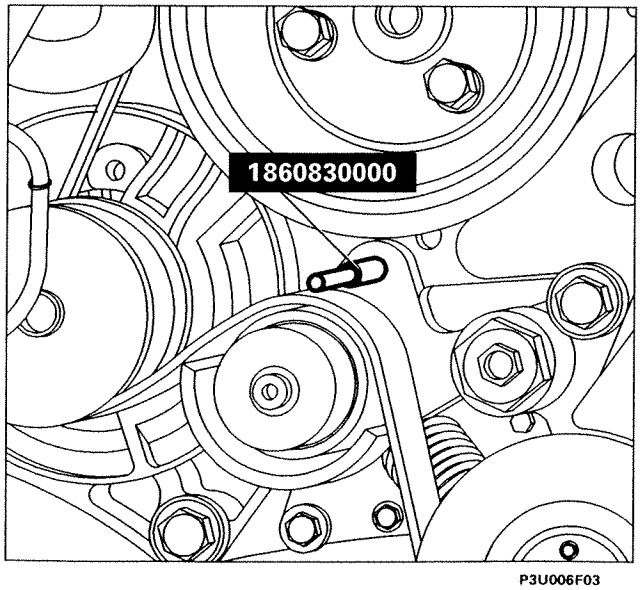

P3U006F03

REFITTING

To refit, reverse the procedure for removal.

Insert the pin 1860830000 in the appropriate hole and check that the belt tension is correct. If the tension is incorrect, refer to the procedure described in Section 10.

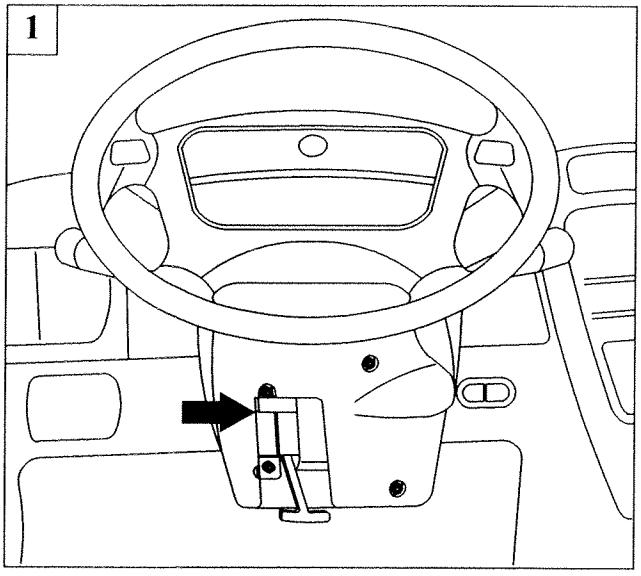

P3U007F01

REMOVING-REFITTING

To remove the steering column assembly, proceeed as follows:

1. undo the highlighted bolts and the bolt which is not visible (accessible through the arrowed slot) securing the upper steering column shrouds, and remove the shrouds;

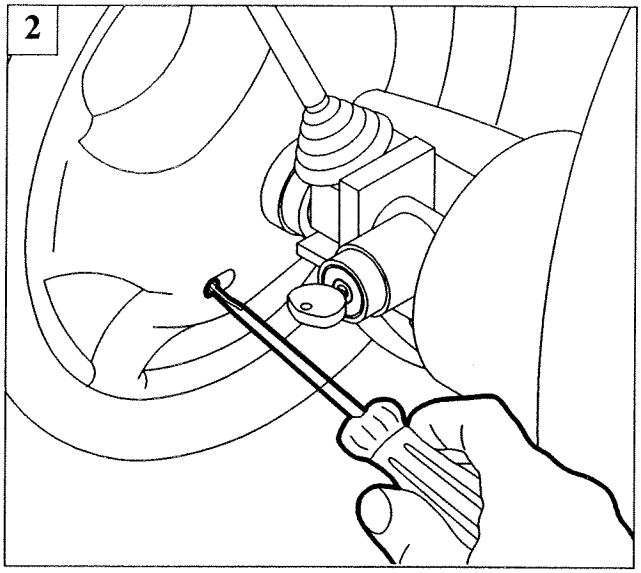

P3U007F02

2. undo the attachment bolts, disconnect the Air Bag connector and remove the steering wheel cover;
3. undo the nut securing the steering wheel to the upper steering column;
4. use tool 1847218000 to remove the steering wheel, after disconnecting the Air Bag's wiring connection;

Tape the two ends of the Air Bag cable onto the steering wheel in their relative positions, in order to avoid cutting through it by mistake during refitting.

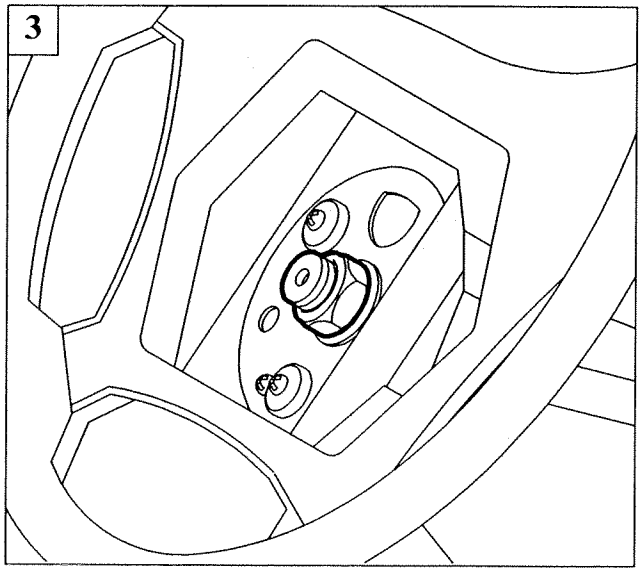

P3U007F03

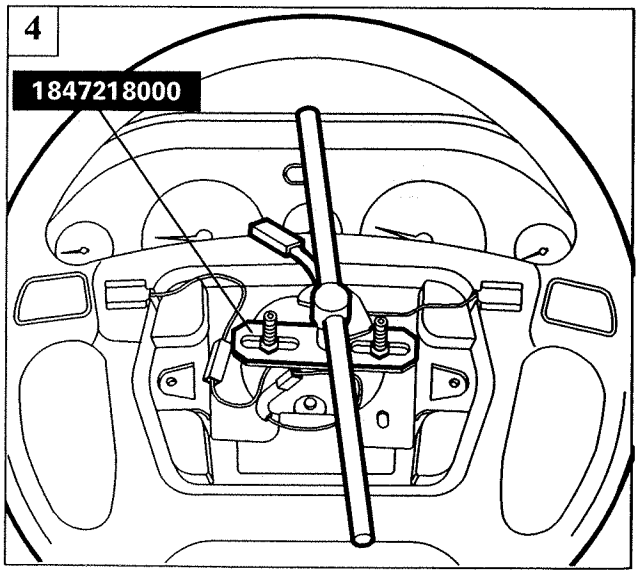

P3U007F04

Copyright Fiat Auto

41.

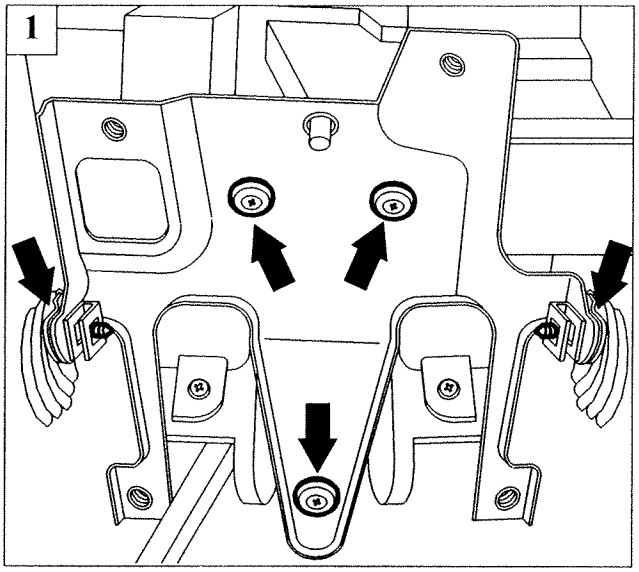

P3U008F01

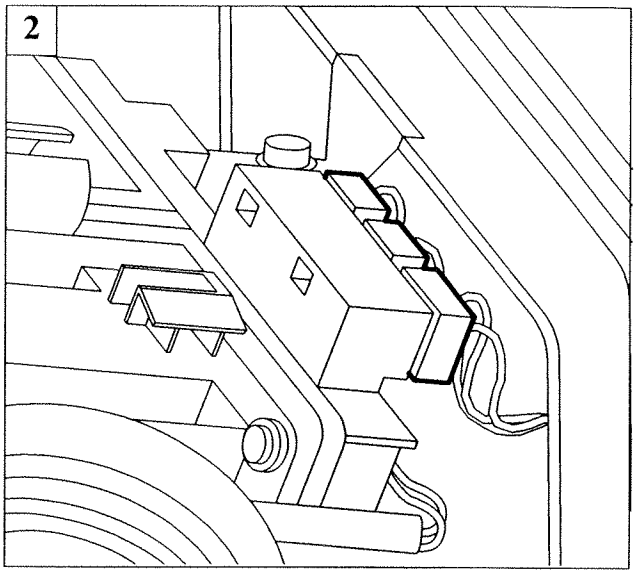

P3U008F02

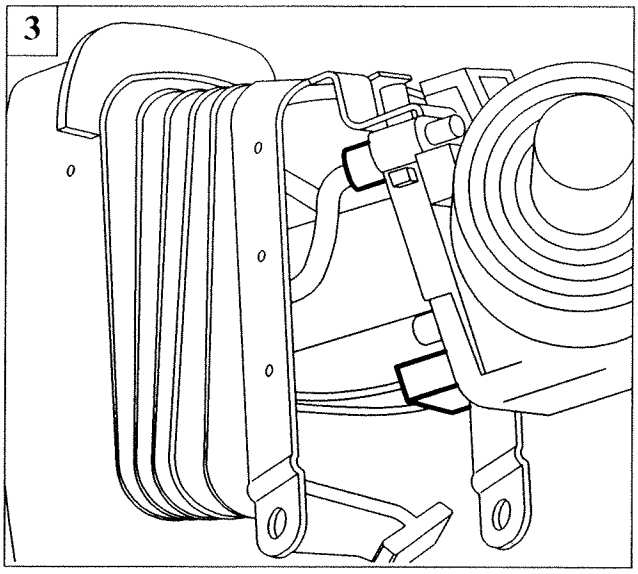

P3U008F03

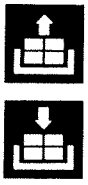

1. undo the attachment bolts and remove the sliding gaiter mounting bracket;
2. disconnect the wiring connections on the right of the stalk unit;
3. disconnect the wiring connections on the left of the stalk unit;
4. remove the stalk unit by undoing the attachment bolts;
5. undo the attachment bolts and remove the sliding gaiter.

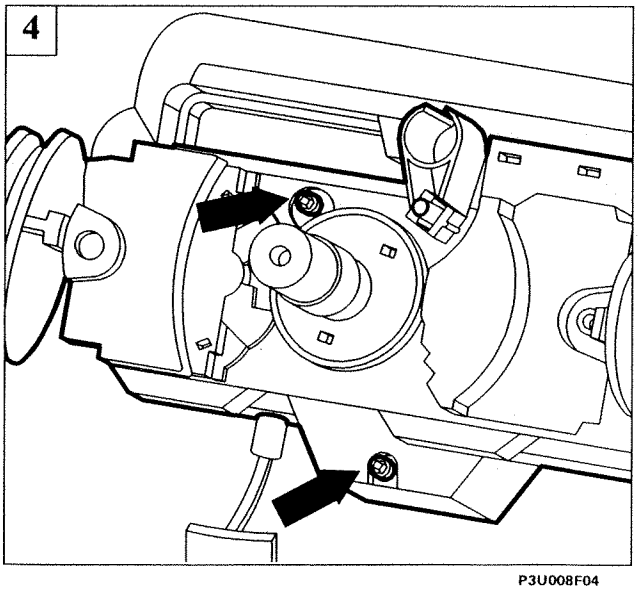

P3U008F04

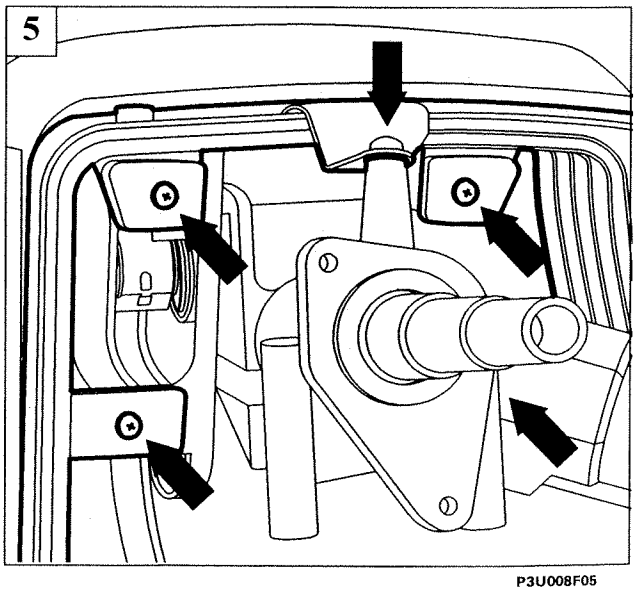

P3U008F05

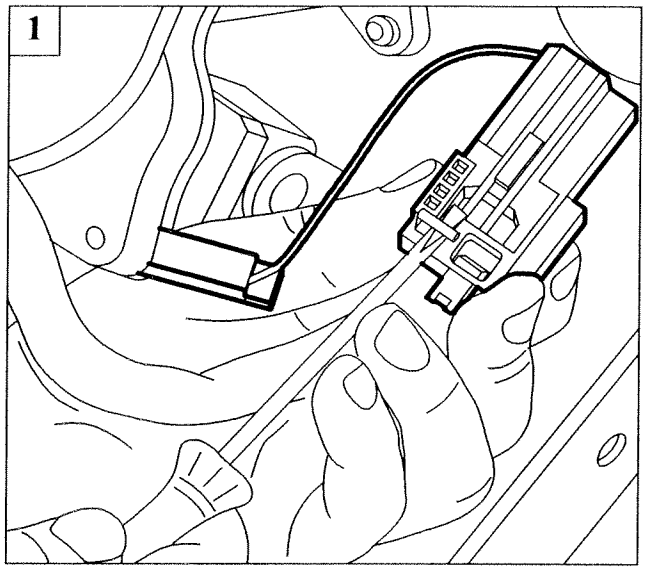

P3U009F01

Disengage the lower steering column from the pinion, following the procedure described for removing and refitting the steering box.

1. Disconnect the connector on the ignition block and disconnect the earth cable;

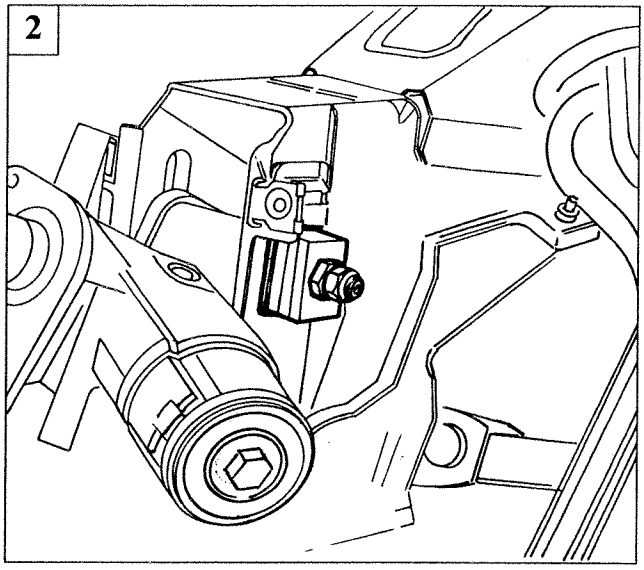

P3U10FA02

2. undo the bolt securing the steering column to the mounting;
3. remove the pin on the steering wheel adjustment lever and remove the lever;
4. undo the bolt securing the steering column to the mounting and remove it, saving the bush through which the bolt passes.

NOTE *To refit, reverse the procedure for removal.*

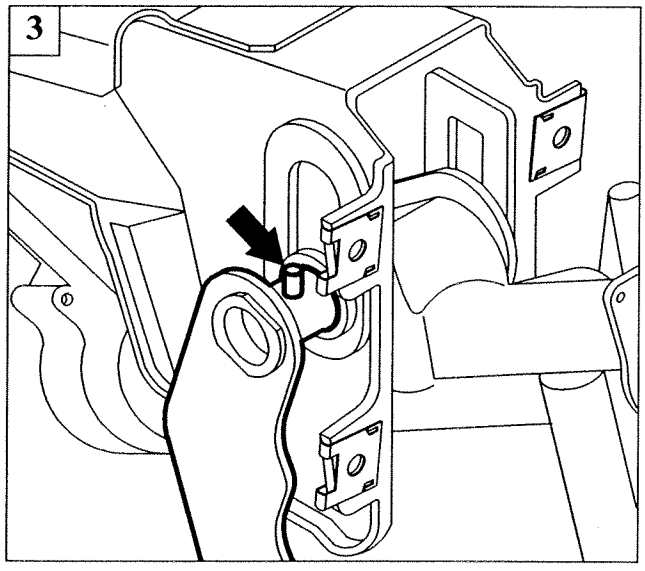

P3U009F03

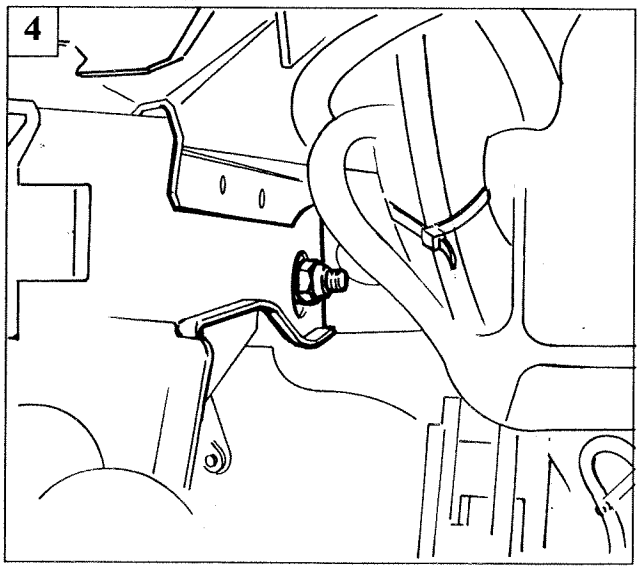

P3U009F04

Copyright Fiat Auto

41.

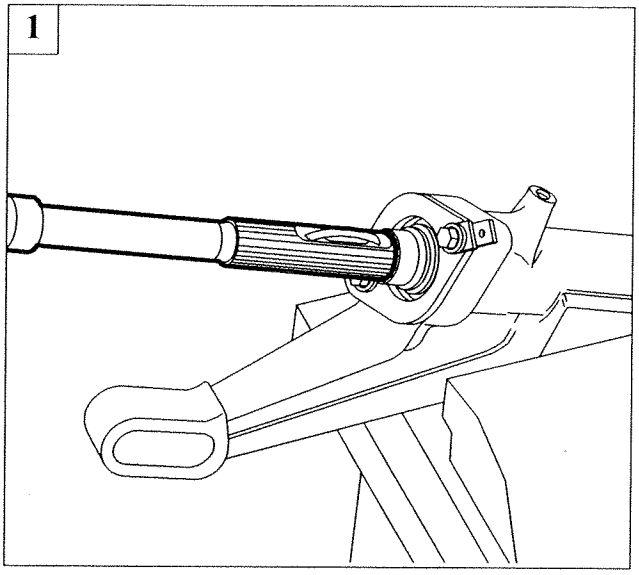

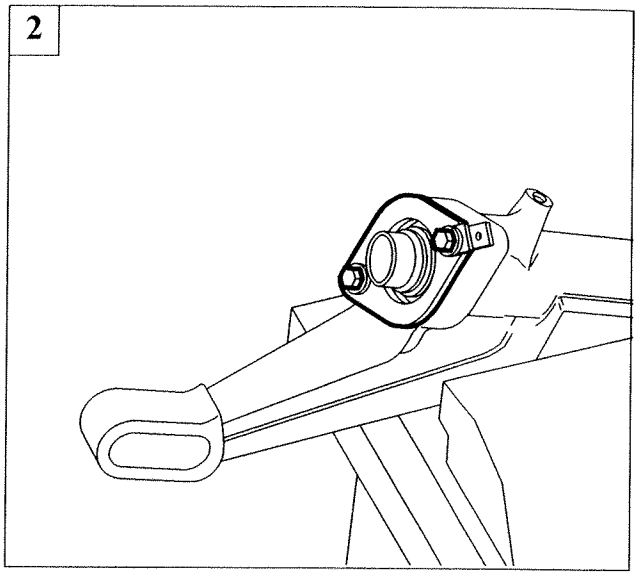

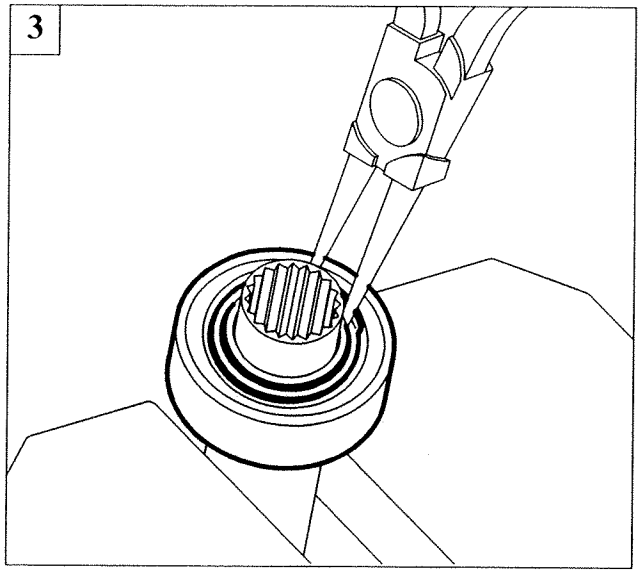

DISMANTLING

To dismantle the steering column assembly components, proceed as follows:

1. position the mounting in a vice and withdraw the lower steering column;
2. undo the bolts on the bearing thrust plate and withdraw the upper steering column;
3. move the bearing stop ring, then withdraw the bearing;

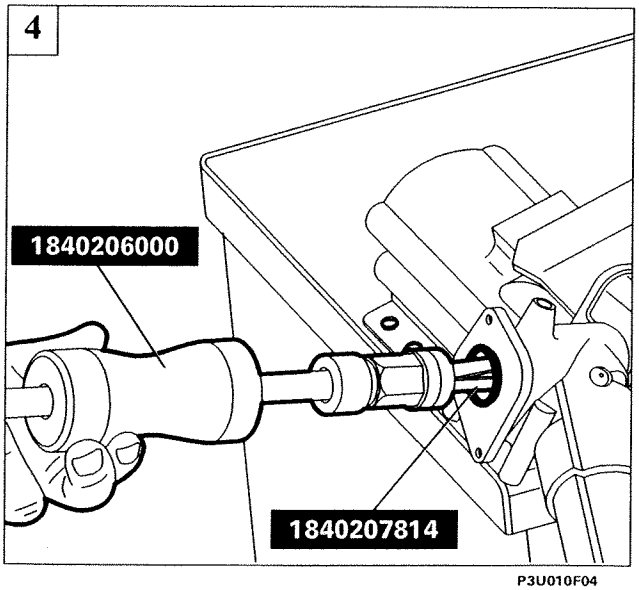

4. using tools 1840206000 and 1840207814, withdraw the rubber roller bearing located on the other end of the mounting;

Check the components and replace any faulty parts;

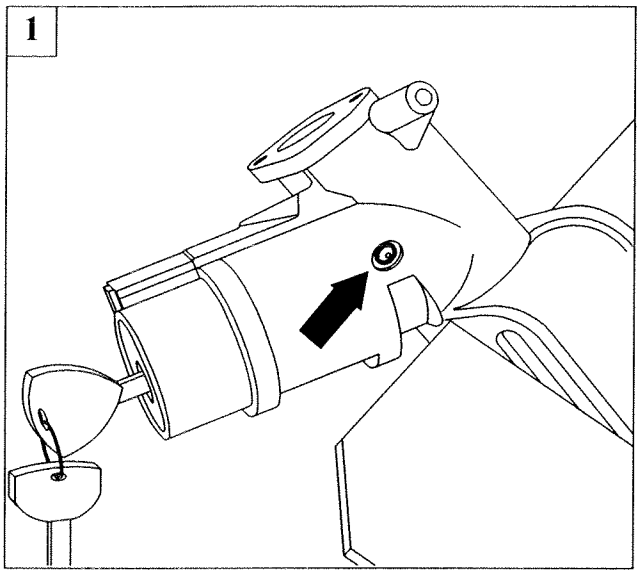

P3U011F01

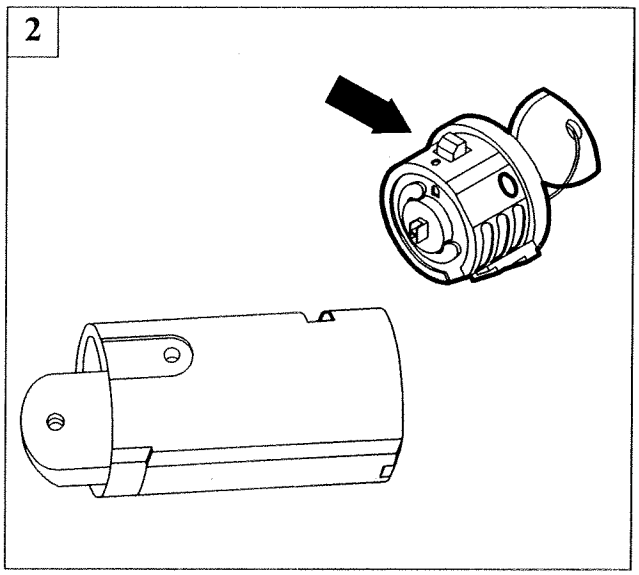

P3U011F02

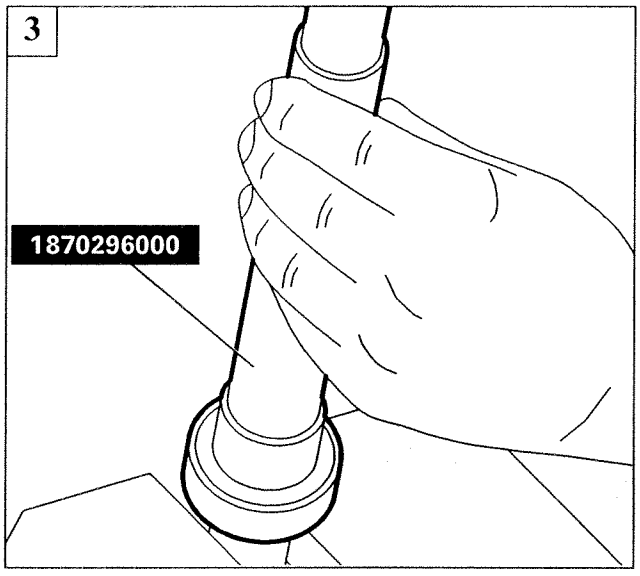

P3U011F03

1. to replace the ignition switch on the bench, unscrew the shear bolt arrowed in the figure;
2. with the key inserted, release the tab and withdraw the key block.

REFITTING

To refit the components of the steering column assembly, reverse the procedure for removal.

3. fit the ball bearing onto the upper steering column;

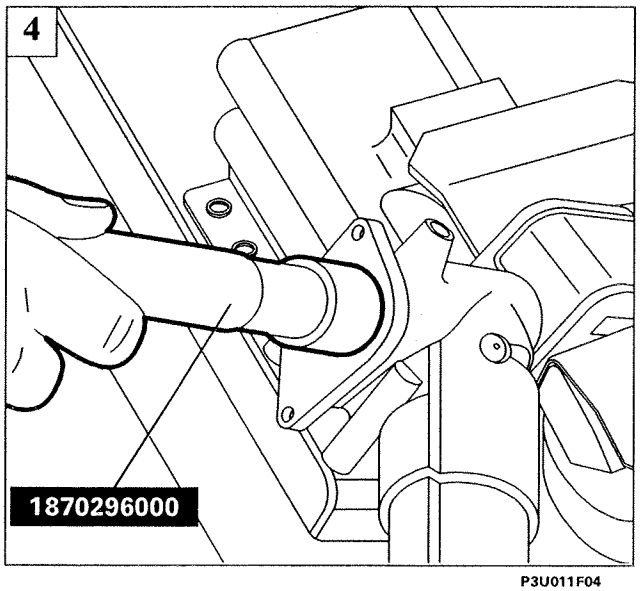

P3U011F04

4. fit the rubber roller bearing onto the mounting.

DESCRIPTION AND OPERATION

The power-assisted steering system comprises:

- a fluid feed reservoir located in the engine compartment;
- a vane pump driven by the engine, with pressure relief and flow regulating valve;
- a set of connecting pipes between pump - distributor valve - actuating cylinder - reservoir;
- power-assisted steering box with rack.

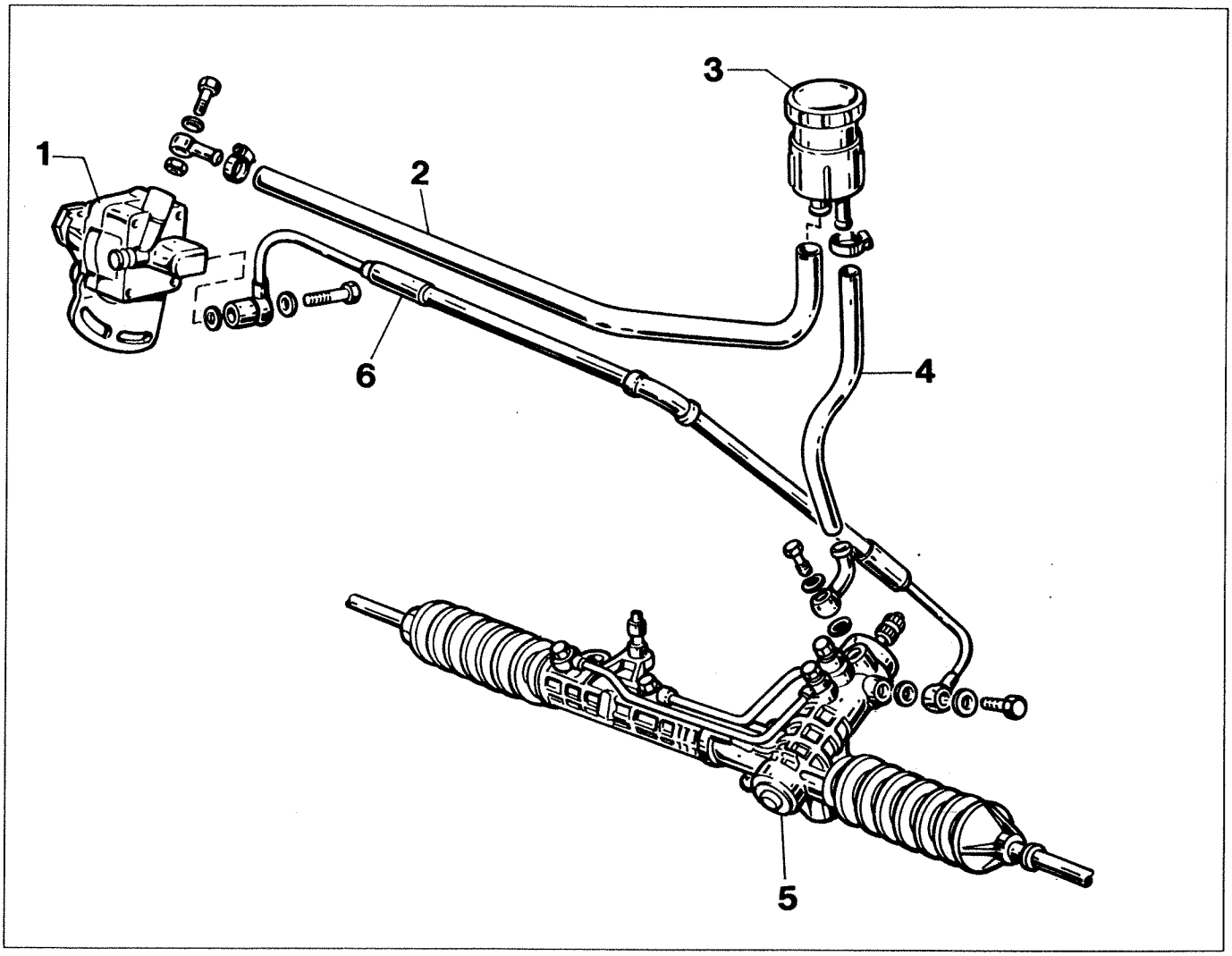

P3U012F01

Components of the power-assisted steering system

1. Pump
2. Fluid delivery pipe to pump
3. Reservoir
4. Fluid return pipe to reservoir
5. Power steering box
6. Pressurized fluid delivery pipe

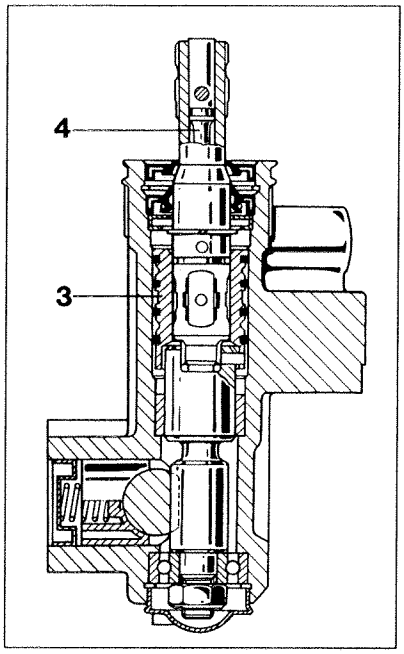

P3N013F01

Power steering distributor valve

The power steering pump is driven by the engine via a belt. It supplies a feed pressure varying between 3.5 bar in the "neutral" position and a maximum of 85 bar in "full lock" position.
The power steering assembly is similar to a mechanical rack-and-pinion steering gear, except for the following differences:

a. in the steering box there is an actuating cylinder (2) in which a double-effect piston, joined to the rack, slides;
b. a distributor valve (3) with the relevant ducts is located in the seating of the worm screw. This valve is controlled by a torsion device (4) located in the end of the worm screw.

Depending on the torsion transmitted by the steering wheel to the device, the pump fluid is sent to the reservoir, or to one of the 2 chambers, A or B, of the actuating cylinder.
The force generated by the fluid pressure on the surface of the side of the piston acts on the rack, reducing the driver's effort during operation of the steering when the engine is running.

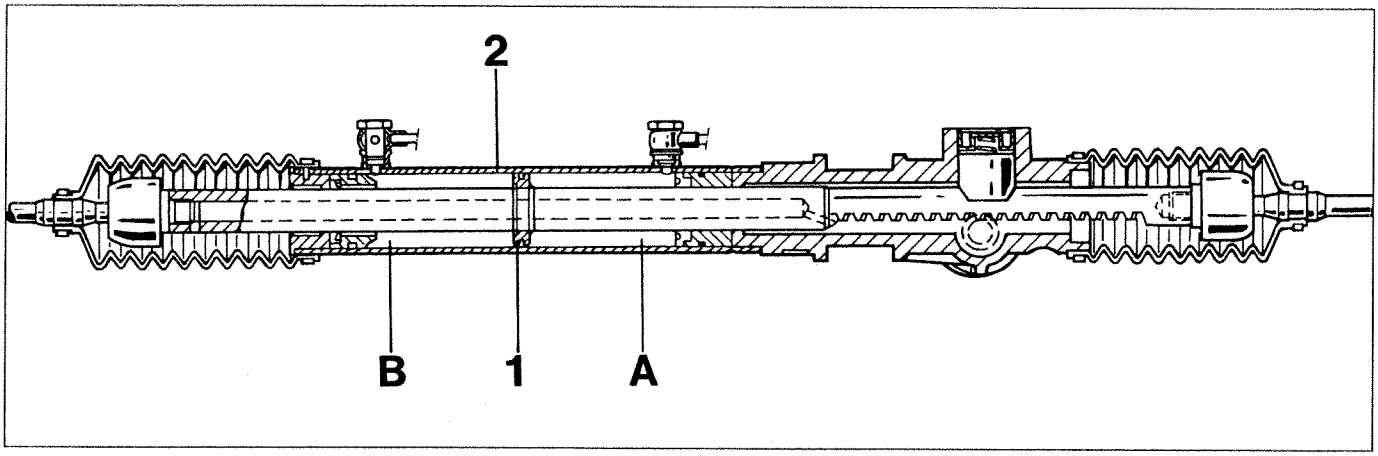

P3U013F02

Longitudinal section of the rack-and-pinion steering box

Checking operation

Check the rolling torque of the steering wheel with the vehicle stopped and the engine running. The torque must be between 0.6 daN with the engine idling and 0.75 daN with the engine at maximum rpm. If these values are exceeded, check the pressure of the system with the wheels on full lock. To do this, fit a pressure gauge using a suitable T-connector on the pressurized fluid delivery pipe to the power steering gear (from the pump) and turn the steering wheel to full lock on one side. When the steering wheel is forced to rotate further, the pressure reading should increase to about 85 bar. If this does not happen, there is a fault in the fluid pump or the power steering valve assembly.
This check is carried out with the engine running at 2000 - 4000 rpm.

Copyright Fiat Auto

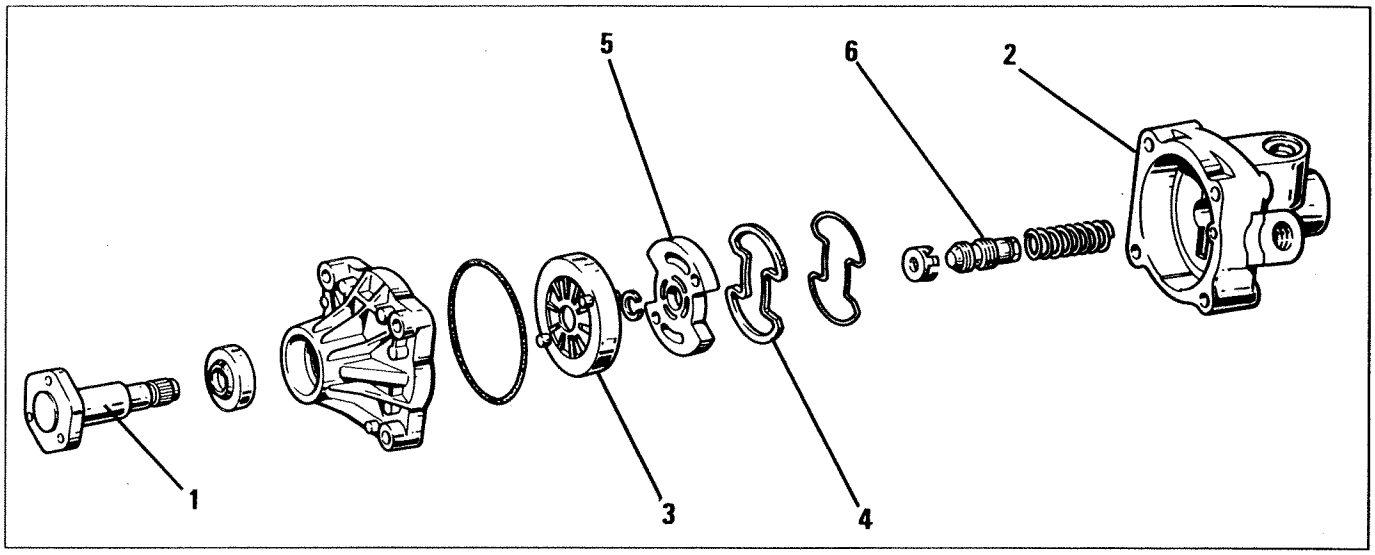

P3U014F01

Components of the power steering pump

1. Drive shaft
2. Pump casing
3. Vane-type impeller
4. Seal
5. Impeller side plate
6. Regulating valve

The power steering assembly and vane-type pump should not be dismantled into their components for any reason, but returned to the manufacturer for overhaul.

Checking fluid level: the fluid level should be checked with the engine running, and topped up as necessary.

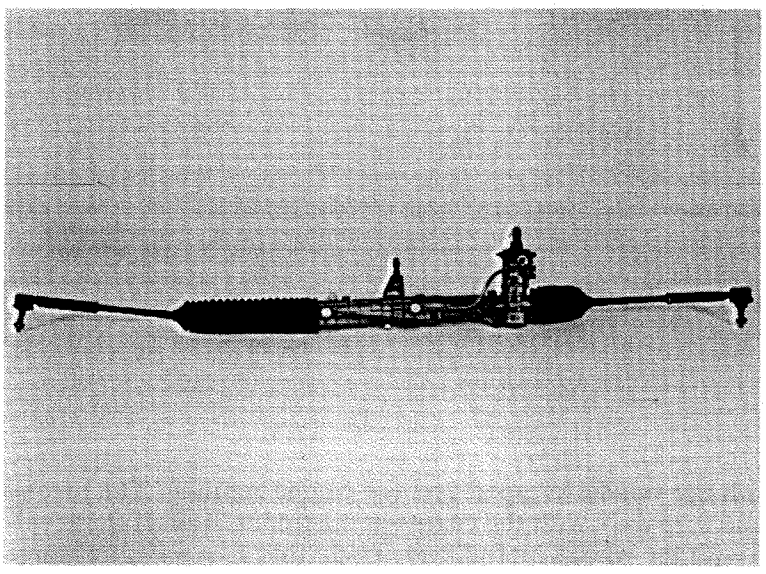

P3U014F02

The power-steering system is self-bleeding; it is bled by turning the steering wheel full lock to the right and left with the engine running and the car stopped.
This operation should be carried out whenever the connecting pipes are removed and refitted.

Rack-and-pinion power steering box complete with track rod ends

NOTE *If the steering becomes stiff, this may be due to slipping of the pump pulley drivebelt or to a low fluid level.*
If the pump, actuating cylinder or distributor valve are faulty, the power-assisted steering will function as an ordinary mechanical steering gear.

page

SERVOTRONIC
- ZF servotronic variable-assistance power steering 1
- Behaviour of the steering in the event of fault in electrical system 2
- Description and operation 2
- Control unit 4

POWER STEERING BOX
- Removing-refitting 5

POWER STEERING PUMP
- Removing-refitting 9

Copyright Fiat Auto

COPYRIGHT Fiat Auto S.p.A.

Reproduction of all or part of the text and illustrations is prohibited.

The information in this publication is intended as a guide and could be superseded by modifications introduced by the Manufacturer at any time for technical and commercial reasons or in accordance with local regulations.

Fiat Auto S.p.A.
Direzione Marketing Commerciale
Direzione Post-Vendita - Servizi - Assistenziali
10134 TURIN (Italy) - Corso E. Giambone, 33
Print no. 506.475 - Ottobre 1994 - 500
Printed in Italy - Tip. Europrint - Torino

ZF SERVOTRONIC VARIABLE-ASSISTANCE POWER STEERING

The variable-assistance power steering consists of a ZF hydraulically-assisted rack-and-pinion steering box, with assistance controlled in accordance with the vehicle speed.
The graph shows the percentage of hydraulic assistance, which reaches a maximum of 95% at low speeds, gradually reduces to 65% at about 150 km/h and then remains constant.
This ensures minimum effort during manoeuves carried out at low speed (parking) and optimum control of the vehicle at higher speeds, so when travelling at high speed, there is no sensation of lightened steering, which always remains firm and under control.
In technical terms, this steering box consists of two opposed cylinders to the rack, which are held under pressure and in balance by a pump. The degree of power assistance is controlled by the hydroelectric converter which, driven by the electronic control unit, manages the discharge outlet from one of the two cylinders (turning right or left).

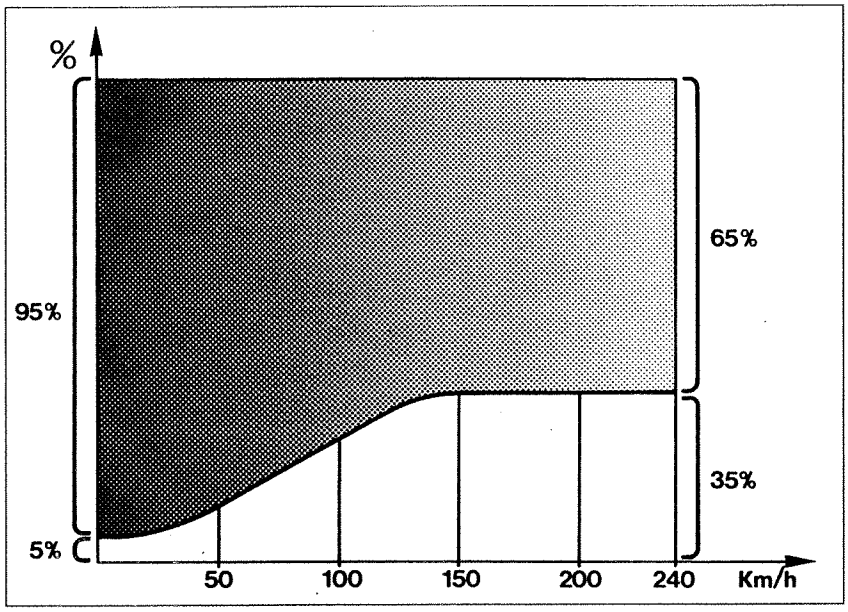

P3U01FA01

- at low speeds the discharge outlet has a large cross-sectional area, so maximum power assistance is provided;
- at medium/high speeds, the discharge outlet becomes gradually smaller and the power assistance reduces proportionally.

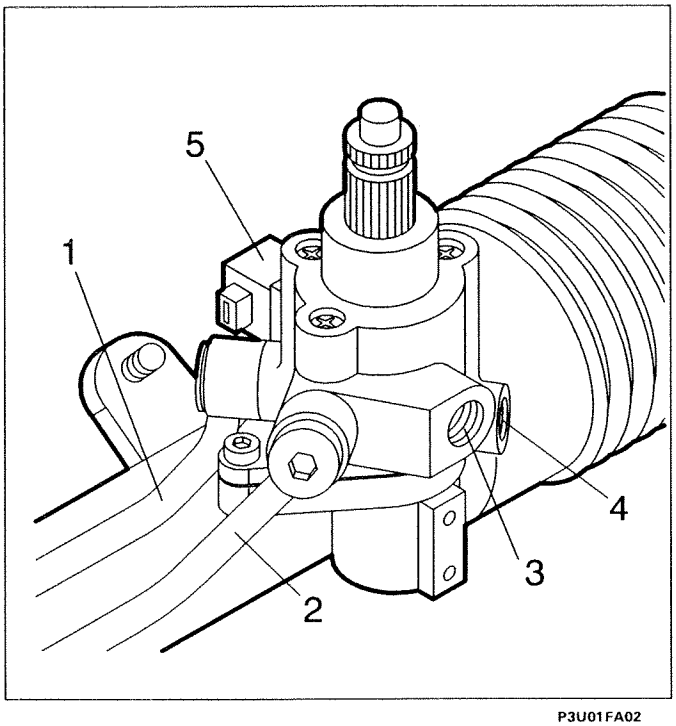

P3U01FA02

1. Fluid pipe for turning left
2. Fluid pipe for turning right
3. Fluid inlet from pump
4. Return to reservoir through cooling pipe coil
5. Hydroelectric converter

Copyright Fiat Auto

BEHAVIOUR OF THE STEERING IN THE EVENT OF A FAULT IN THE ELECTRICAL SYSTEM

Interruption in speedometer signal

- At high speeds: the control unit stores this condition in memory, and then for the entire duration of the journey, the steering will be ideal for high speeds and will tend to be stiff during parking manoeuves.
- At low speeds: the control unit stores this condition in memory, and then for the entire duratio of the journey, the steering will be ideal for parking manoeuvres and very light at high speeds.

The condition stored in the control unit's memory is deleted when the ignition is switched off, so:

- on subsequent journeys, if the speedometer signal is still missing, the control unit stores in memory the vehicle stopped condition, and so the steering will have maximum hydraulic assistance at all speeds.

Temporary interruption in speedometer signal

- When the signal returns after the malfunction, the control unit resumes its functions in accordance with the characteristic assistance curves.

No control unit supply or earth

- Ideal driving for high speeds, very hard at low speeds and during parking manoeuvres.

DESCRIPTION AND OPERATION (see figure on next page)

After receiving the speed information from the pulse generator (3) on the gearbox (brown cable, connector F on the instrument panel), the electronic speedometer (1) sends to the electronic module (2) a frequency signal proportional to the vehicle speed. The module processes this signal and supplies the hydroelectric converter (4) with current values (mA) proportional to the hydraulic reaction to be applied:

VEHICLE STOPPED - IGNITION ON: about 800 mA

- 20 km/h: 600 mA
- 40 km/h: 500 mA
- 60 km/h: 400 mA
- 90 km/h: 250 mA
- 120 km/h: 20 mA

NOTE *When the control unit is connected to the FIAT-LANCIA Tester via the diagnostic socket, the following may be read or done:*
- *exact identification of the system by:*
  a. reading ISO code,
  b. reading identification code;
- *check on validity of FIAT-LANCIA Tester/control unit connection;*
- *information on:*
  a. error on speed signal (no signal),
  b. error on electro-hydraulic converter (short circuit between the converter's terminal or between the terminals and earth)
  c. RAM error,
  d. temporary or intermittent faults;
- *self-test of the components:*
  a. RAM.

Components of the ZF Servotronic variable-assistance power steering

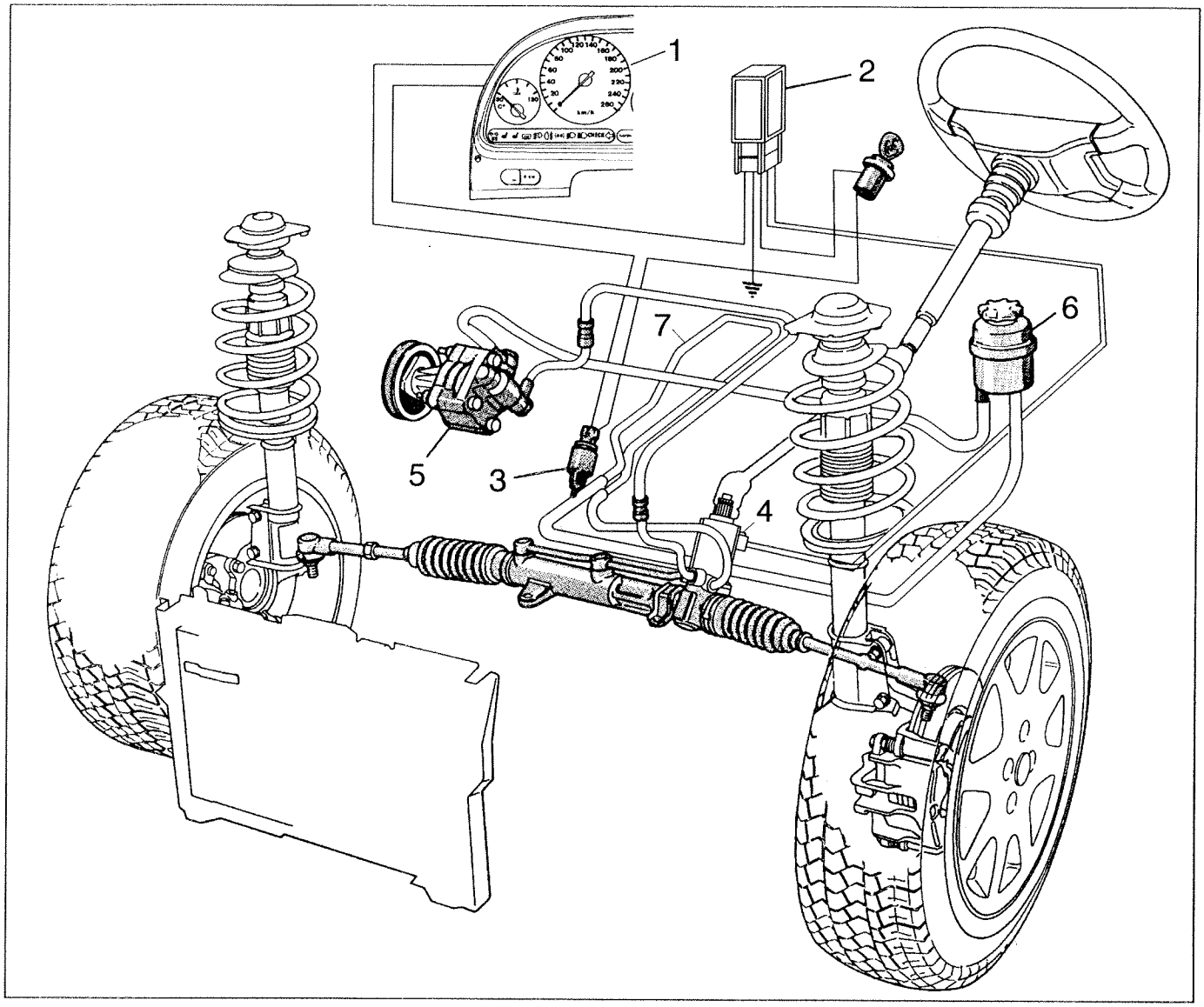

P3U03FA01

Other components of the system are the vane-type fluid pump (5), the fluid reservoir (6) housed in the compartment between the engine and interior compartments and the pipe coil (7) for cooling the fluid.
The pipe coil (7) ensures constant fluidity of the oil; it has been inserted because at high temperatures, the fluid loses its characteristics, its lubricating power is reduced and there are considerably more leaks.

NOTE *The steering box and fluid pump are not overhauled during servicing operations.*

Steering wheel turns	3
Rack travel	153 mm
Fluid type	Tutela GI/A
Quantity of fluid	1.25 kg

Copyright Fiat Auto

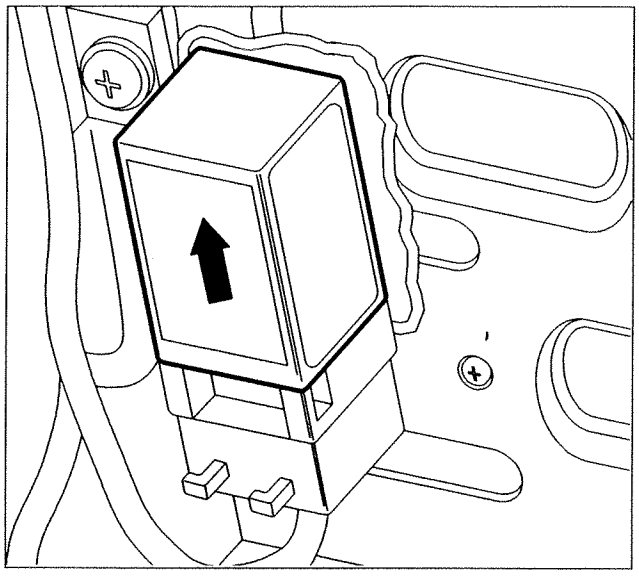

P3U04FA01

CONTROL UNIT

Removing-refitting

The Servotronic control unit is located on the right of the luggage compartment and is accessed by removing the right side panel.

1. Remove the control unit and withdraw it upwards;

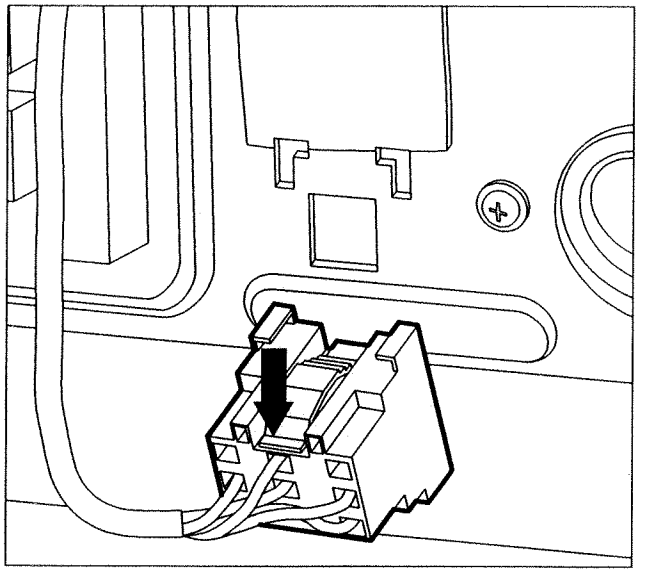

P3U04FA02

2. release the connector by disengaging the appropriate lug;

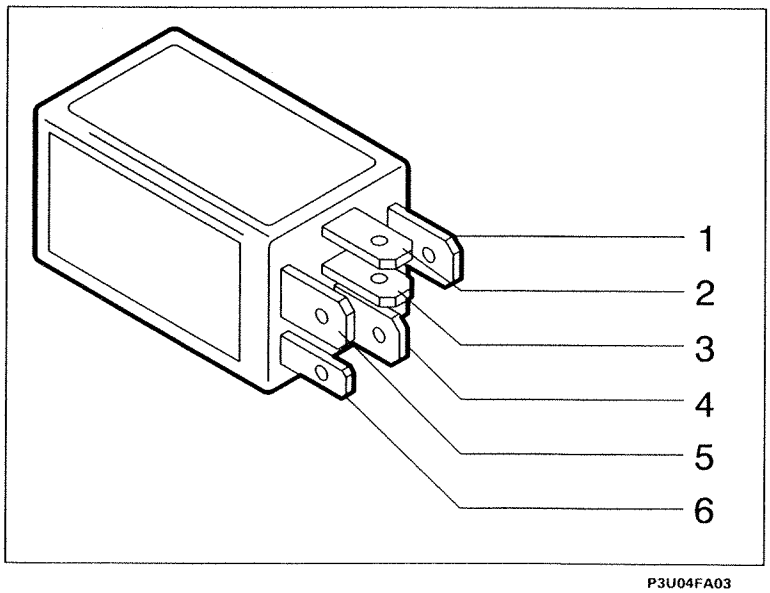

P3U04FA03

1. supply
2. earth
3. electrohydraulic converter
4. electrohydraulic converter
5. speed signal
6. fault diagnosis

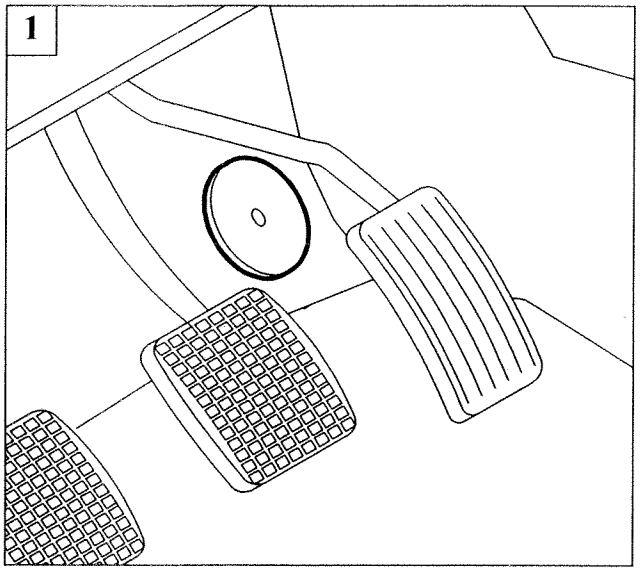

P3U001F01

REMOVING-REFITTING

Working from inside the vehicle, remove the trim cover under the dashboard on the left and the guard below, as described in Section 70;

1. remove the accelerator pedal travel limit stop and push aside the carpet;

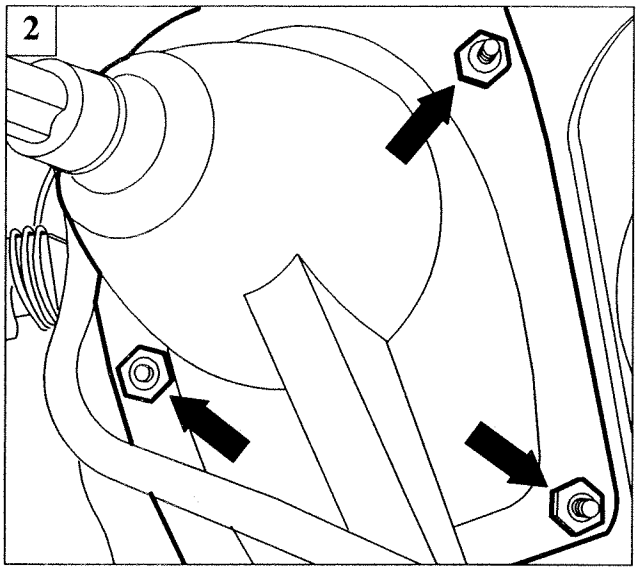

P3U001F02

2. undo the bolts on the universal joint hood;
3. undo the bolt securing the universal joint to the steering pinion;
4. undo the bolts and remove the universal joint hood, engine side;

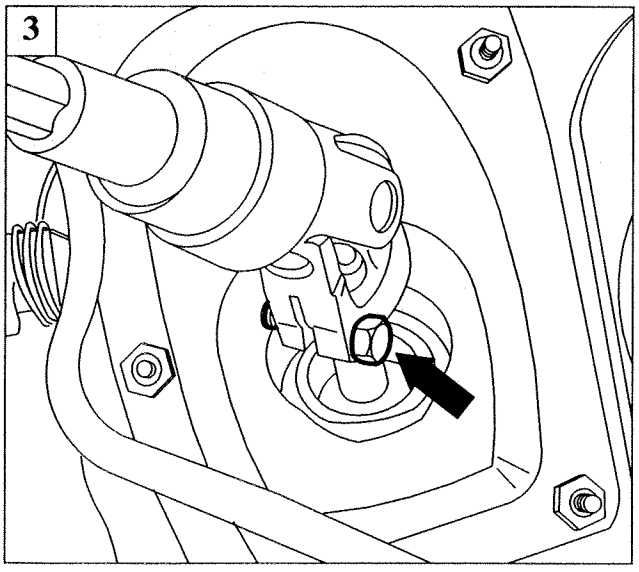

P3U001F03

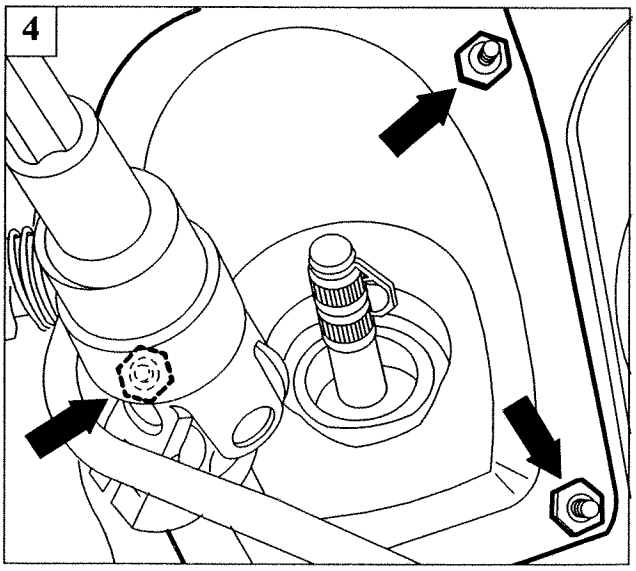

P3U001F04

Copyright Fiat Auto

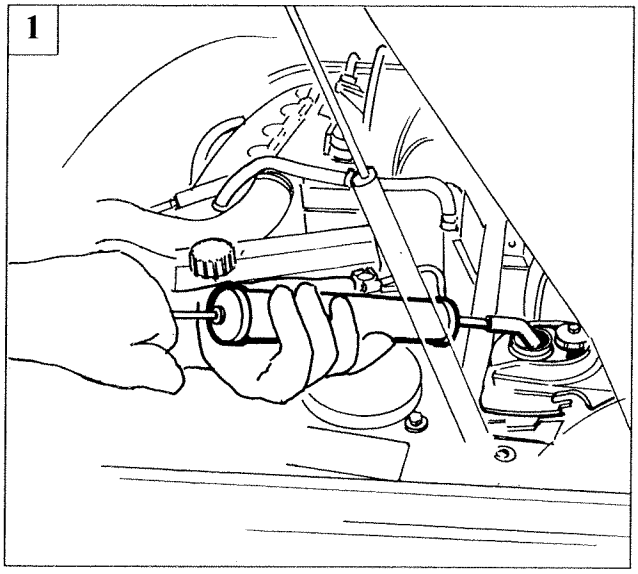

P3U002F01

Place the vehicle on ramps and remove the front wheels, remove the additional plastic wheelarches from both sides of the vehicle, and then:

1. drain the fluid from the power steering system;

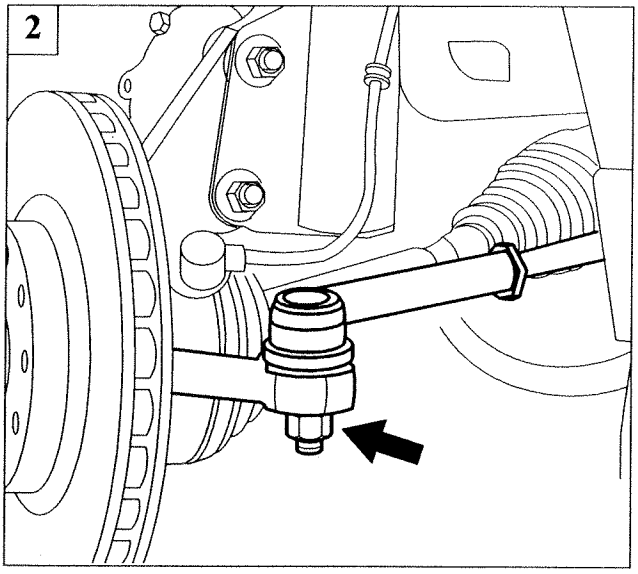

P3U002F02

2. undo the nut securing the track rod end pin to the vertical link;
3. using tool 1847035000, remove the track rod end pin from the vertical link;
4. remove the engine bottom guard, then remove the exhaust pipe first section by undoing the bolts indicated;

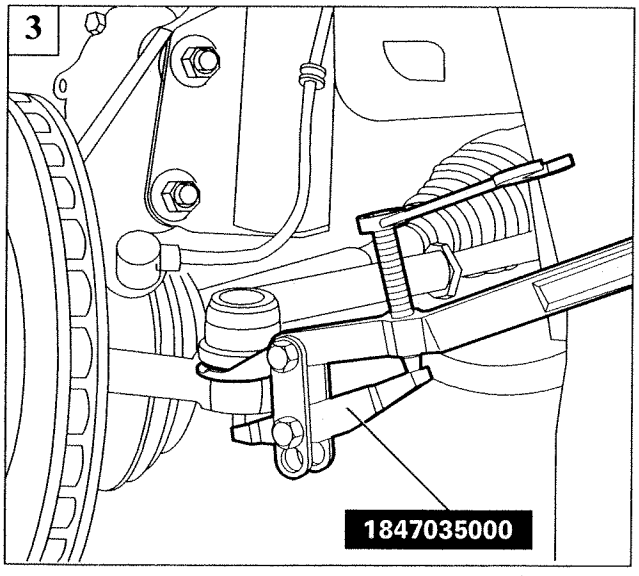

P3U002F03

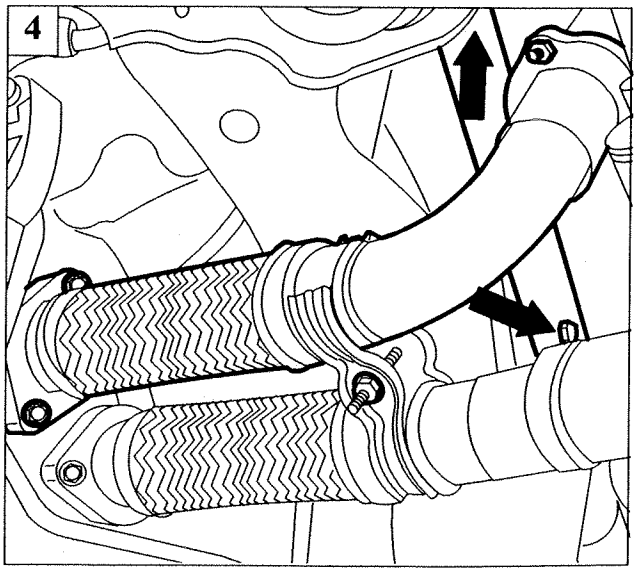

P3U06FA01

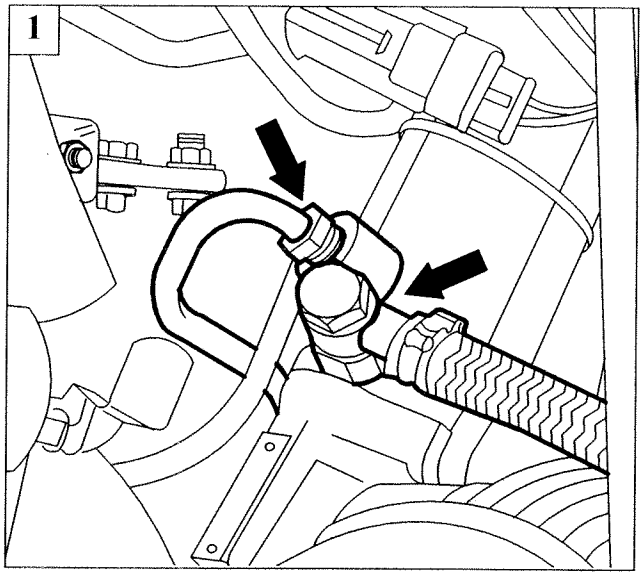

P3U07FA01

1. disconnect the wiring connector on the converter located at the rear of the power steering box and disconnect the connectors from the box (fluid pipe from pump and fluid return pipe to reservoir);

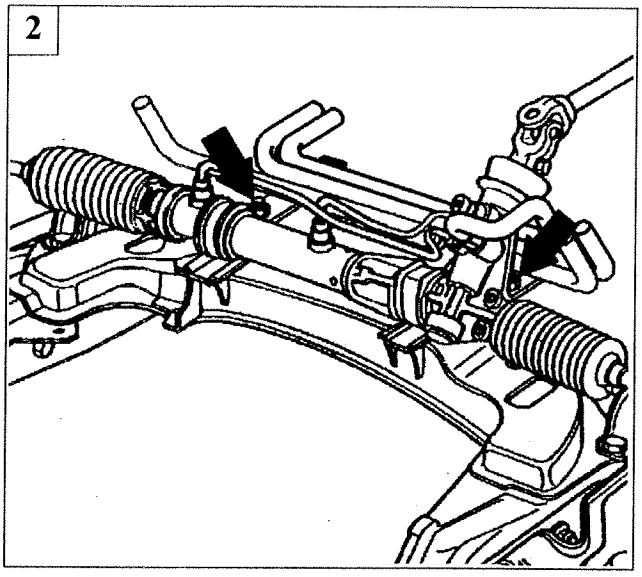

P3U07FA02

2. undo the bolts on the rigid pipe mounting bracket;
3. undo the bolts securing the power steering box to the chassis and undo the fluid pipe attachment clip;
4. withdraw the power steering box from the left of the vehicle;

Check the front wheel toe-in whenever the steering box is removed and refitted.

NOTE *To refit, reverse the procedure for removal.*

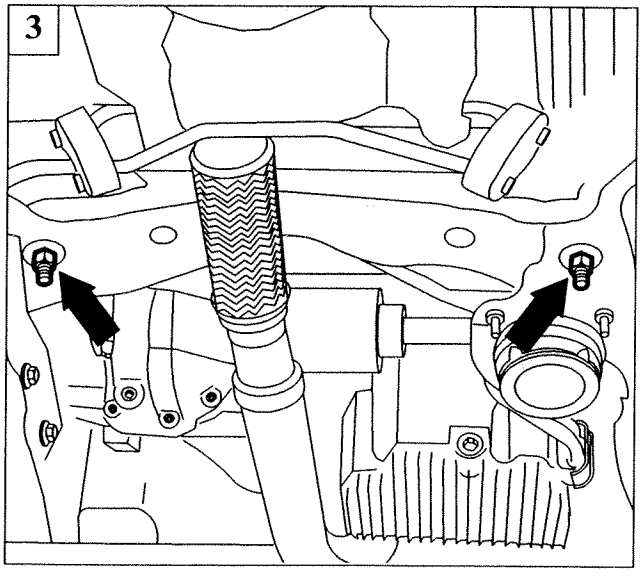

P3U07FA03

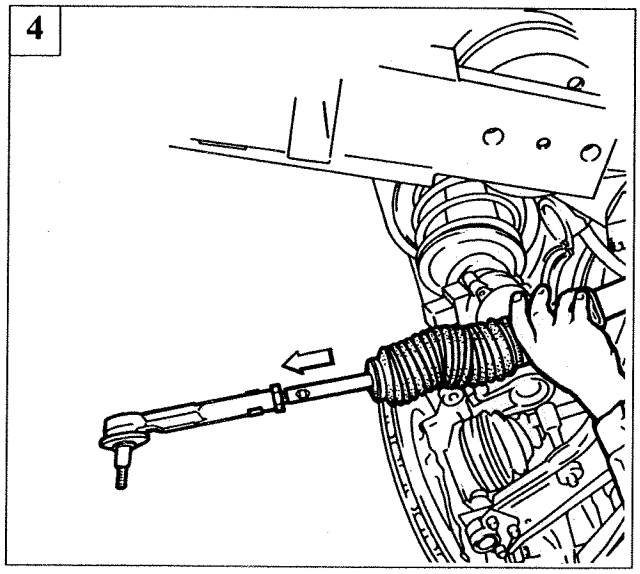

P3U07FA04

Copyright Fiat Auto

41.

Components of the steering box supplied as spare parts

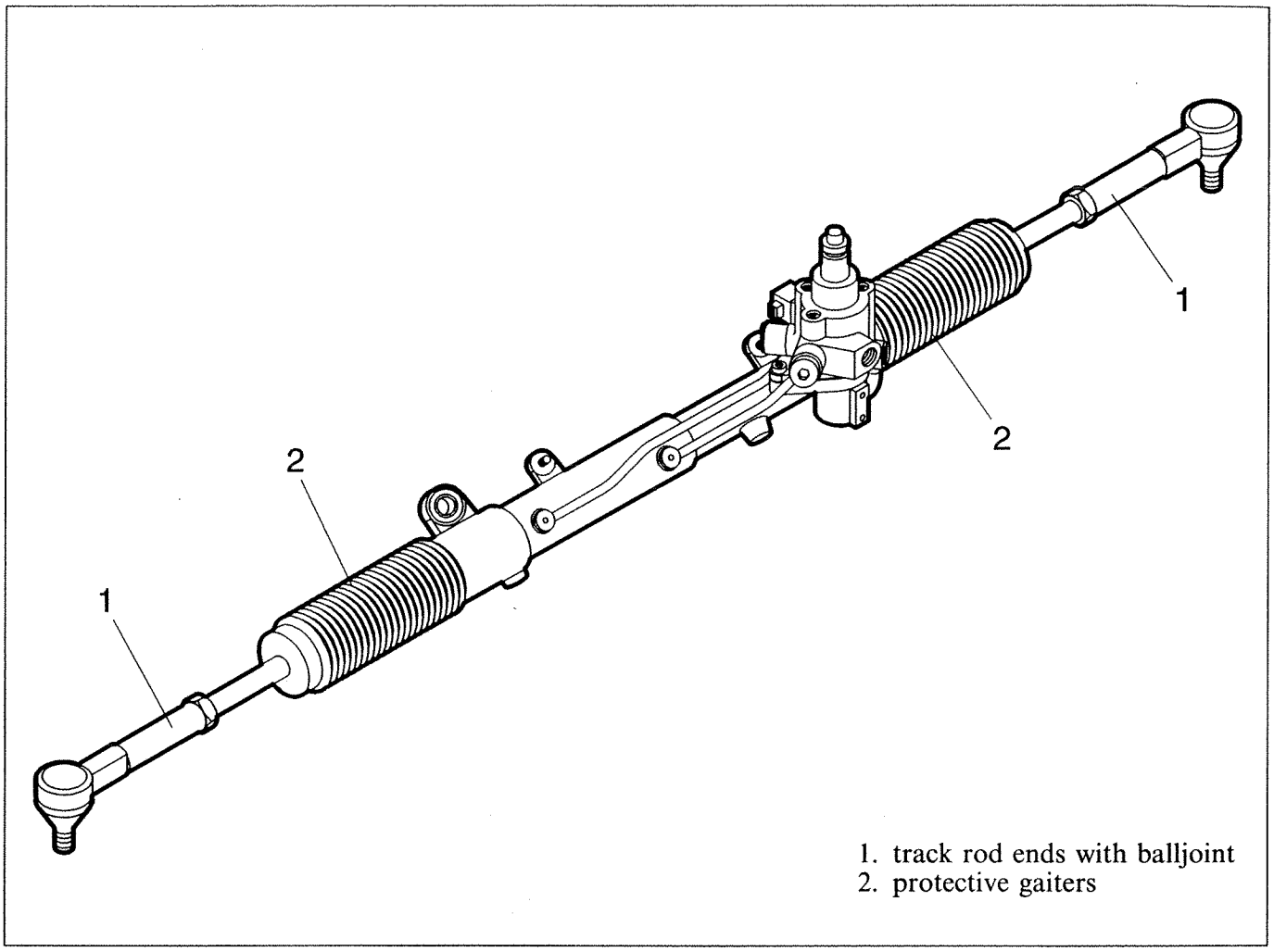

1. track rod ends with balljoint
2. protective gaiters

P3U08FA01

1. dismantle the track rod end with balljoint from the track rod;

2. undo the clips and remove the protective gaiters;

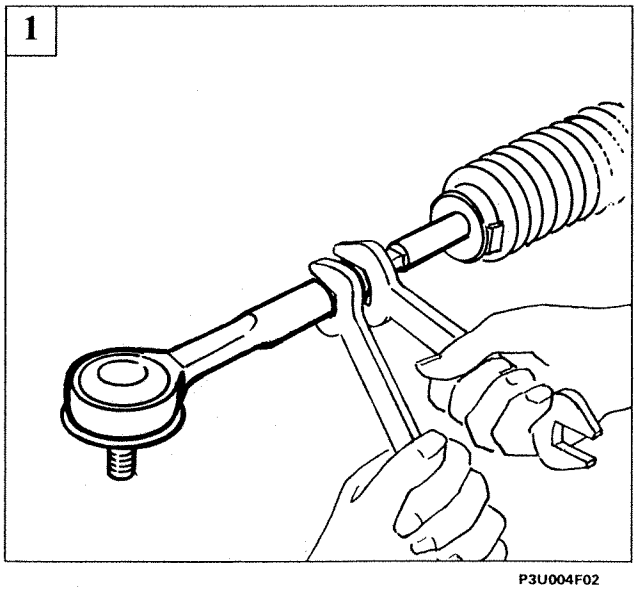

P3U004F02

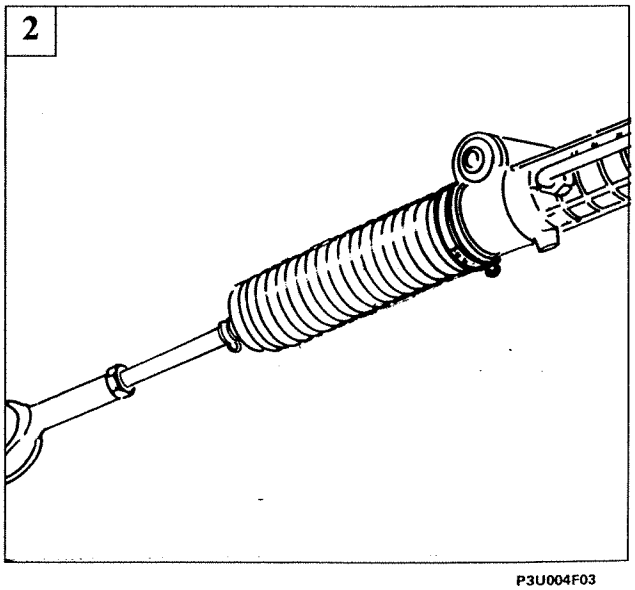

P3U004F03

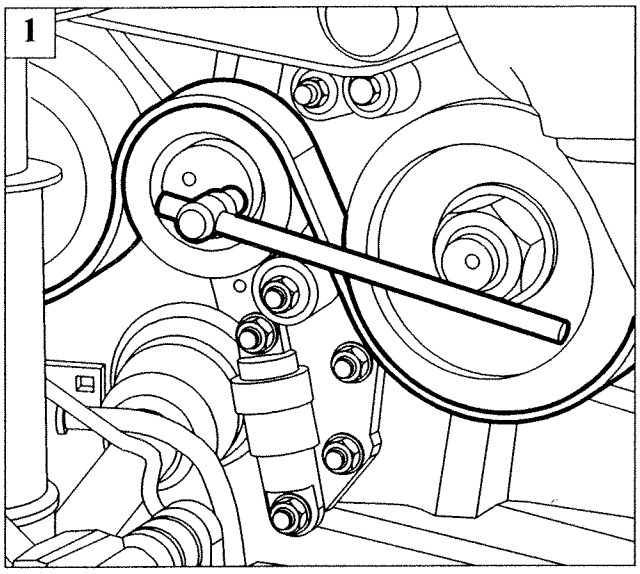

P3U09FA01

REMOVING-REFITTING

To remove the power steering pump, carry out the following operations:

1. slacken the tensioner and remove the poly-V belt;

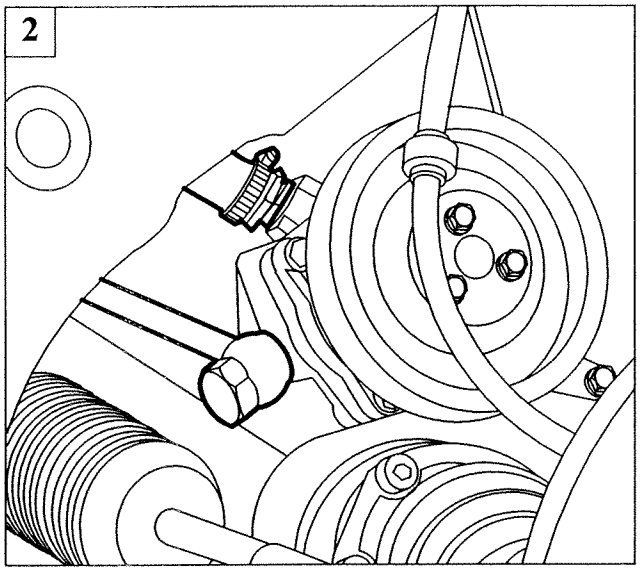

P3U09FA02

2. disconnect the connector and pipe from the pump;
3. undo the nut securing the engine oil pipes to the sump;
4. disconnect the connector on the engine oil filter mounting and remove the filter;

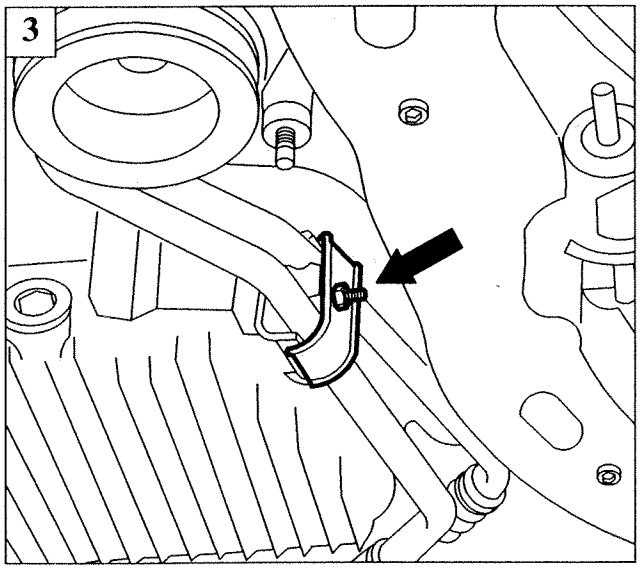

P3U09FA03

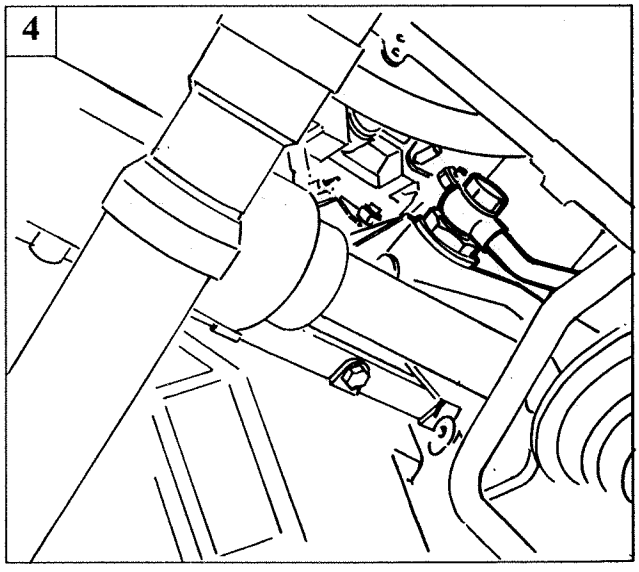

P3U09FA04

Copyright Fiat Auto

41.

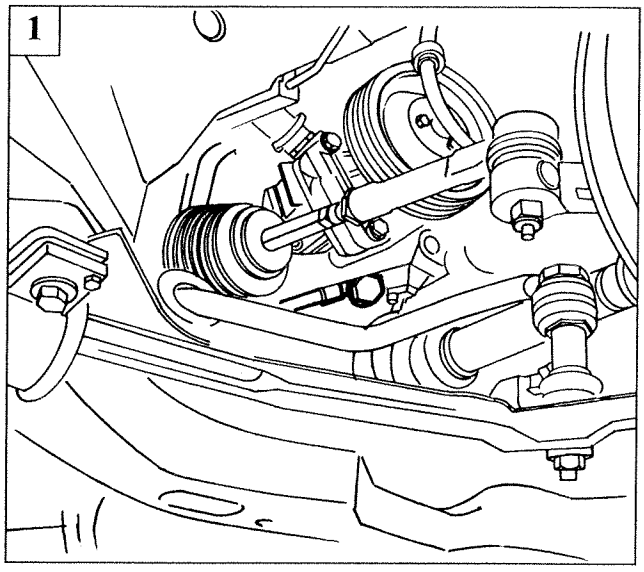

P3U10FA01

1. disconnect the connector on the oil filter mounting;

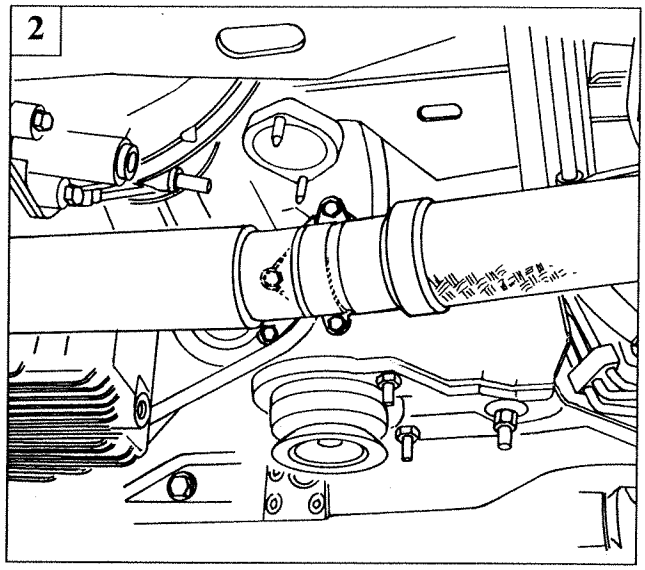

P3U009F02

2. undo the bolts securing the power steering pump to its bracket;
3. undo the remaining attachment bolt and remove the pump;
4. Insert the pin 1860830000 in the appropriate hole and check that the belt tension is correct.
   If the tension is incorrect, refer to the procedure described in Section 10.

NOTE *To refit, reverse the procedure for removal.*

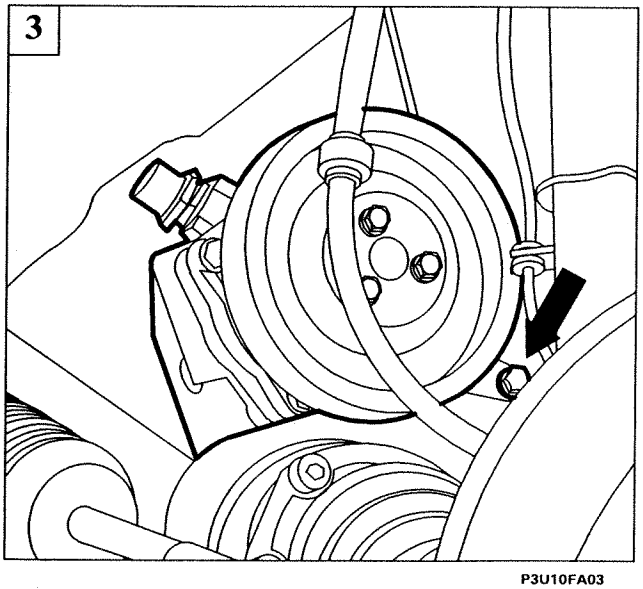

P3U10FA03

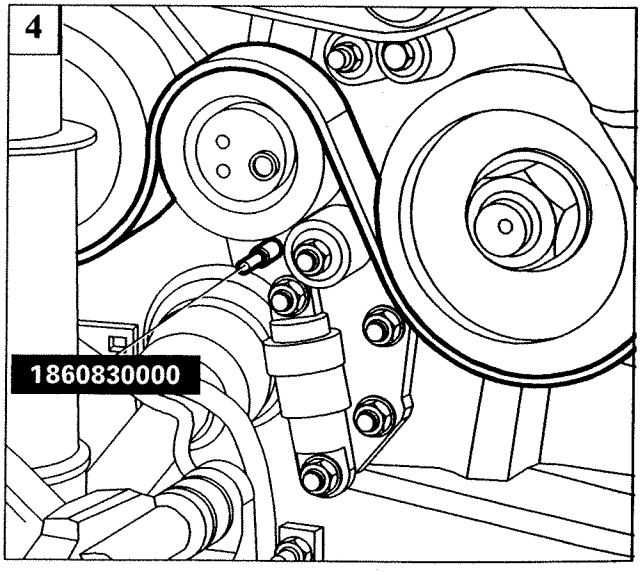

P3U10FA04

Suspension and wheels

Contents

44.

page

FRONT SUSPENSION

- Removing 1
- Refitting 3
- Dismantling-reassembly 4
- Spring-shock absorber assembly 6

REAR SUSPENSION

- Removing 8
- Dismantling-reassembly 12
- Refitting 12
- Spring-shock absorber assembly 13
- Stub axle bush 16

WHEEL GEOMETRY

- Front wheel geometry 17
- Rear wheel geometry 18

Copyright Fiat Auto

COPYRIGHT Fiat Auto S.p.A.

Reproduction of all or part of the text and illustrations is prohibited.

The information in this publication is intended as a guide and could be superseded by modifications introduced by the Manufacturer at any time for technical and commercial reasons or in accordance with local regulations.

Fiat Auto S.p.A.
Direzione Marketing Commerciale
Direzione Post-Vendita - Servizi - Assistenziali
10134 TURIN (Italy) - Corso E. Giambone, 33
Print no. 506.475 - Ottobre 1994 - 500
Printed in Italy - Tip. Europrint - Torino

1

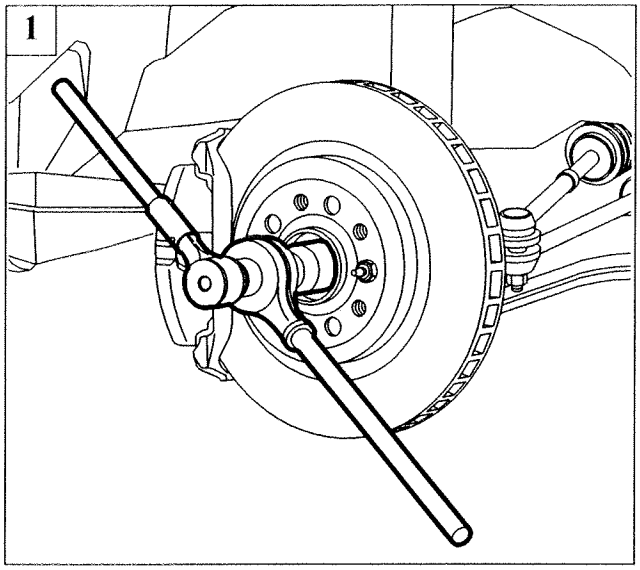

P3U001G01

2

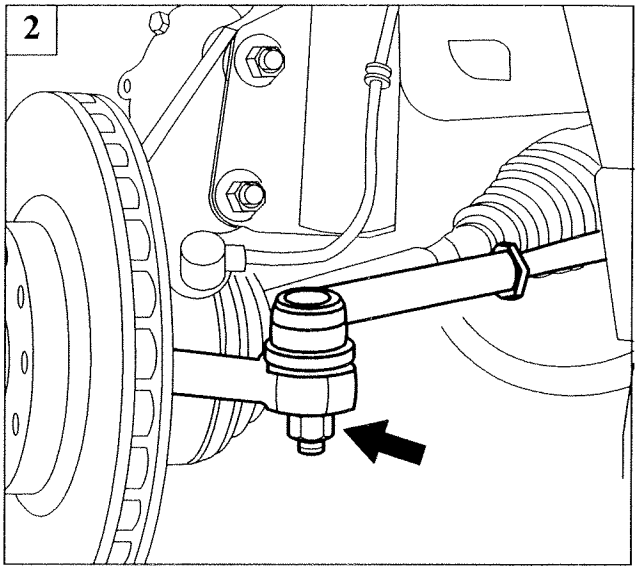

P3U001G02

3

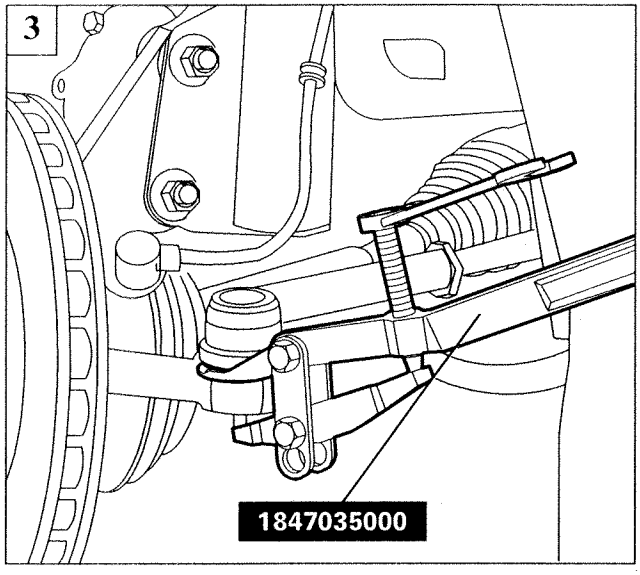

P3U001G03

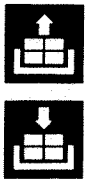

REMOVING

Place the car on ramps and remove the front wheels, then proceed as follows:

1. relieve the staking and remove the nut securing the constant velocity joint;
2. undo the nut securing the track rod end pin to the vertical link;
3. using tool 1847035000, remove the track rod end pin from the vertical link;
4. undo the screw securing the speed sensor to the vertical link;
5. undo the nuts securing the connecting link to the wishbone;

4

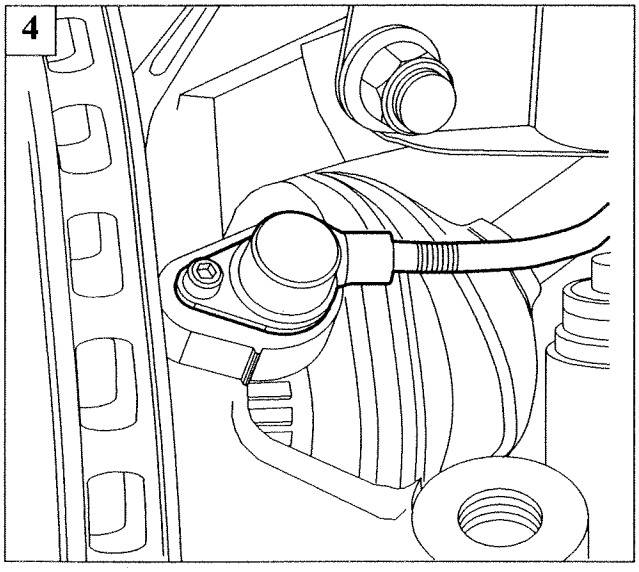

P3U001G04

5

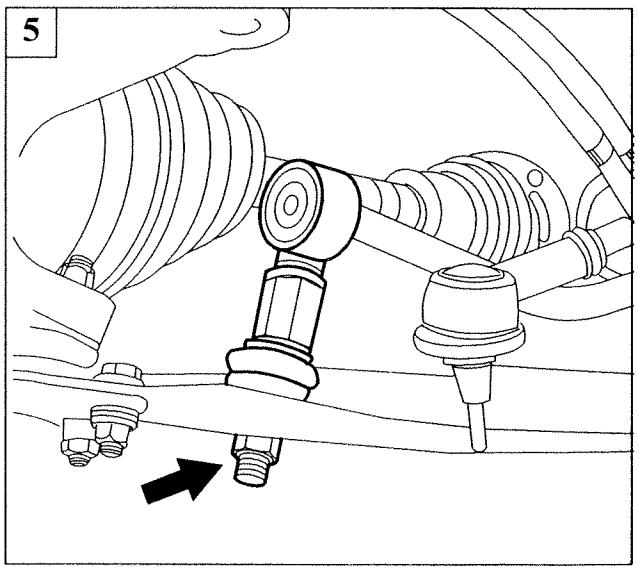

P3U001G05

Copyright Fiat Auto

44.

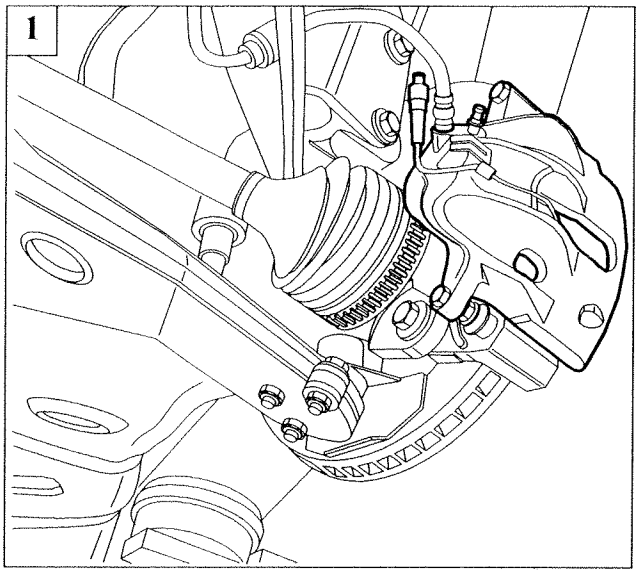

P3U002G01

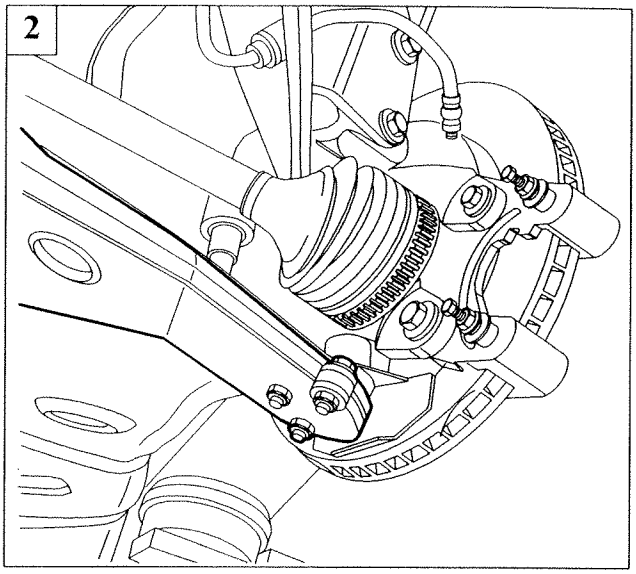

P3U002G02

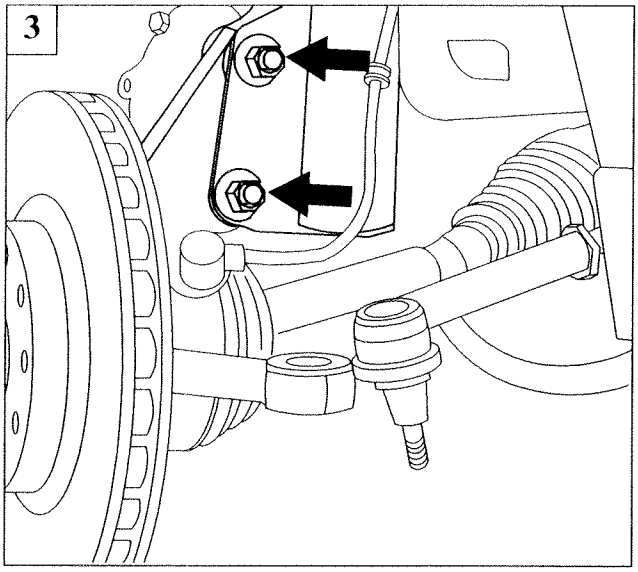

P3U002G03

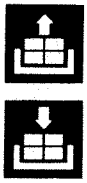

1. disconnect the wiring connector on the brake pad wear sensor, undo the caliper bolts, separate the caliper from the disc and then secure it as appropriate in the wheel compartment;
2. undo the bolts securing the wishbone to the balljoint head;
3. undo the bolts securing the vertical link to the shock absorber and remove it;
4. undo the bolts securing the wishbone to the chassis;
5. undo the screws securing the wishbone to the chassis and remove it;

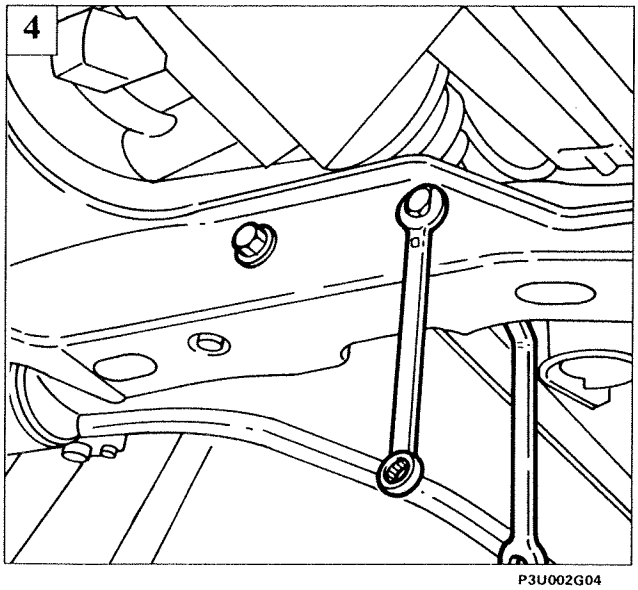

P3U002G04

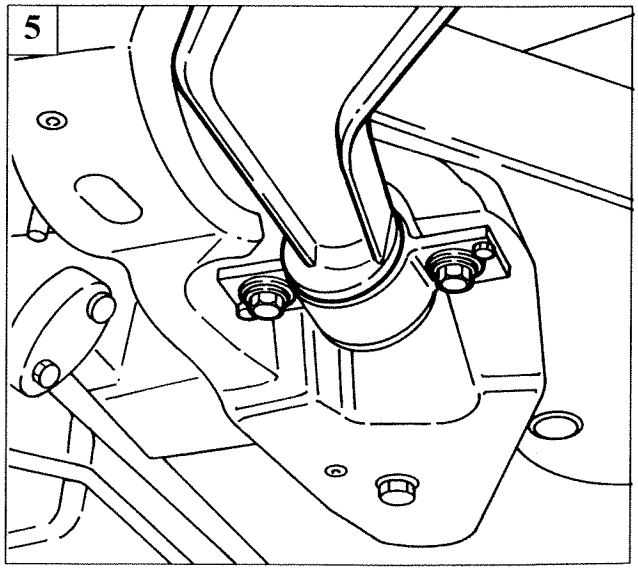

P3U002G05

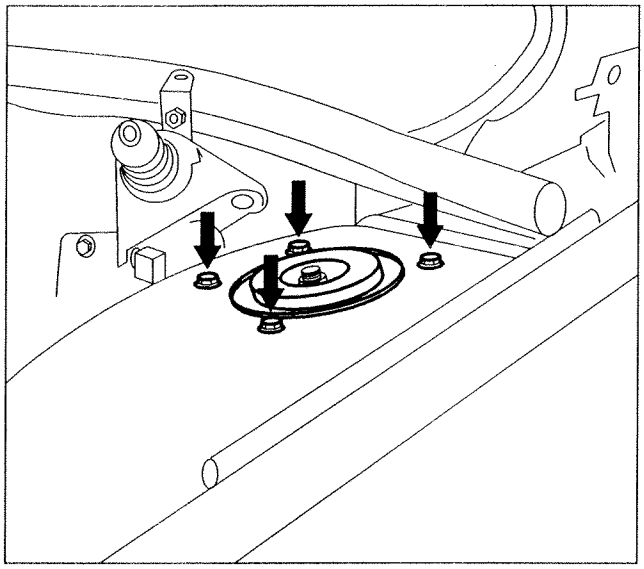

P3U003G01

- undo the bolts securing the shock absorber top mounting to the bodywork and remove the spring-shock absorber assembly.

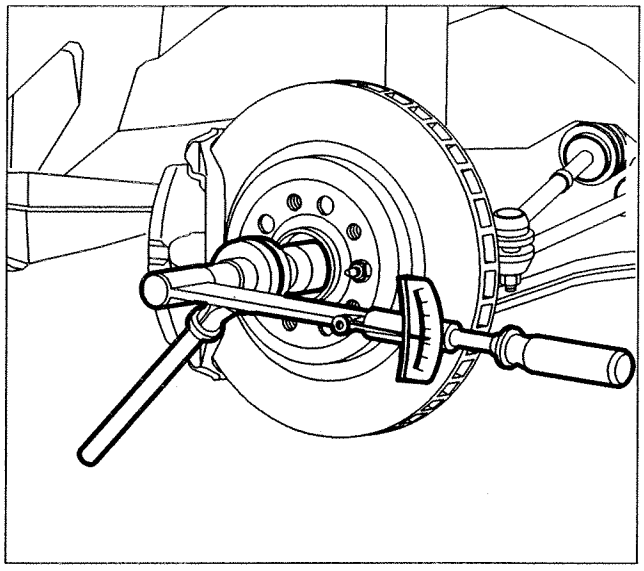

P3U003G02

6 daNm +52°

REFITTING

To refit, reverse the procedure for removal, tightening the various suspension components to the specified torques.

Tighten to the correct torque and stake the hub nut, in accordance with the following instructions:

- always use a new nut;
- thoroughly clean the threaded tip of the half shaft using a metal brush, and then using compressed air;
- apply Loctite 270 adhesive (or an equivalent product) on the whole threaded section of the half shaft tip;
- tighten the new nut to the specified torque within 5 minutes of applying the adhesive;

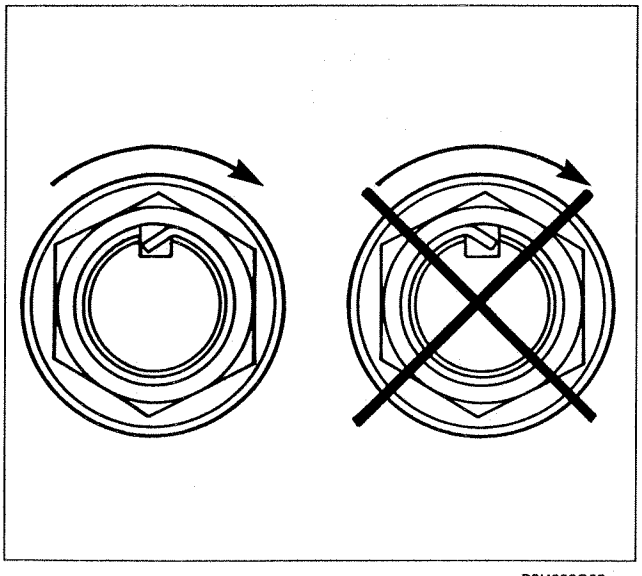

P3U003G03

- stake the nut collar.

The collar should be cut on the notch of the hub on the side contrary to that of tightening, so as to present greater resistance to spontaneous slackening.

Also check front wheel geometry

1

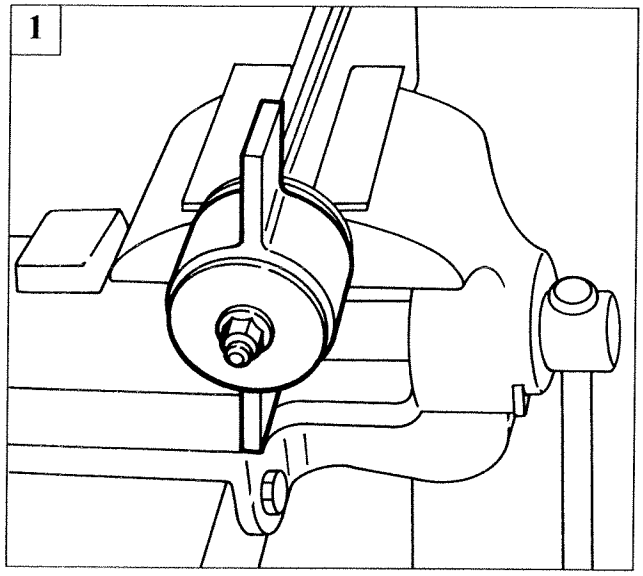

P3U004G01

DISMANTLING - REFITTING

Wishbone

1. Place the wishbone in the vice and undo the bolt securing the rear bush;
2. to refit the bush, take care over the following parts (shown in the Figure);
   a. the tapered rubber part must be on side of the welded washer;
   b. the outer holes "f_e" must be in front of the halfway point of the attachment flange, while the inner holes "f_i" must be behind;
   c. the axis of the bush and the axis of the wishbone must form an angle "β" of 1° 30';
3. place the vertical link in the vice and undo the nut securing the balljoint, then prise it off using the tool 1847035000;
4. undo the attachment bolt and remove the brake disc.

2

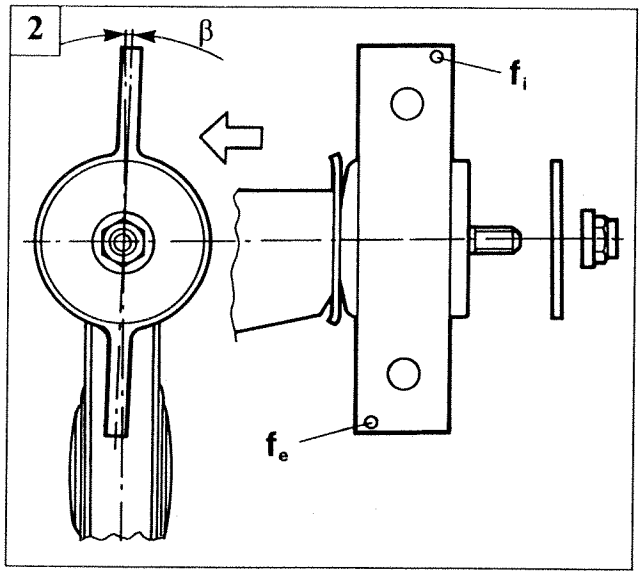

P3U004G02

3

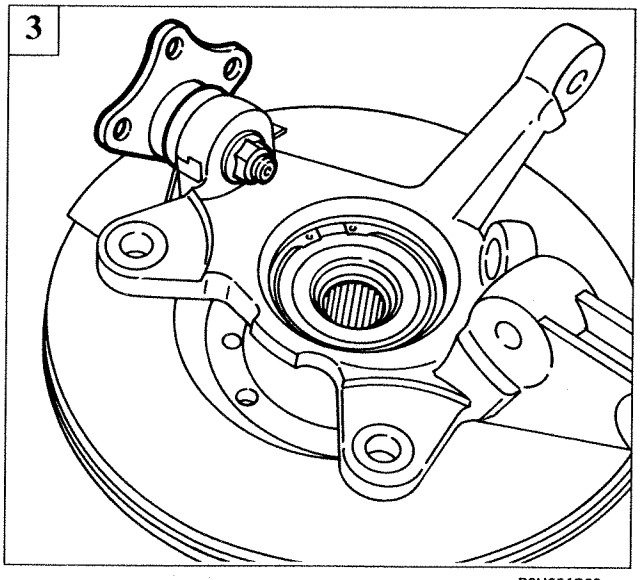

P3U004G03

4

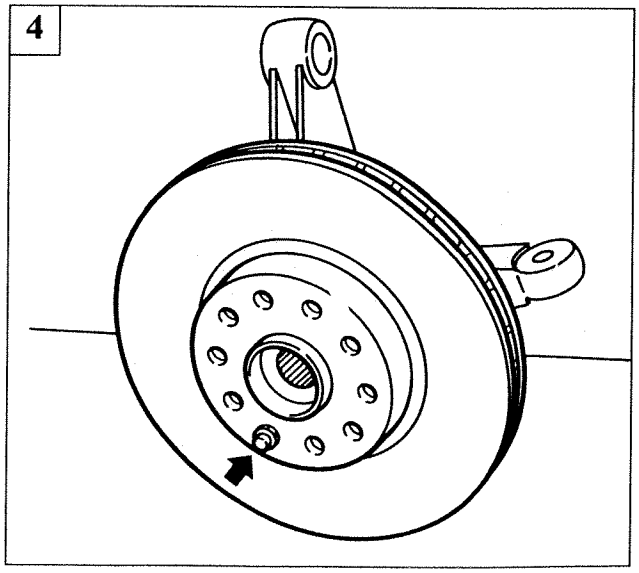

P3U004G04

1

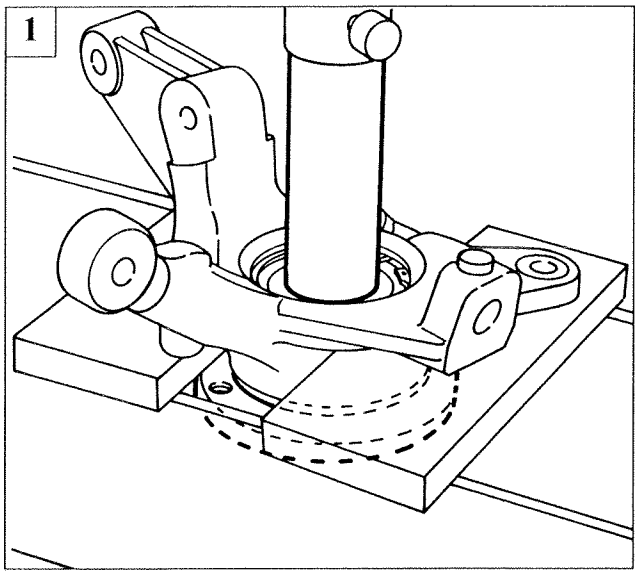

P3U005G01

2

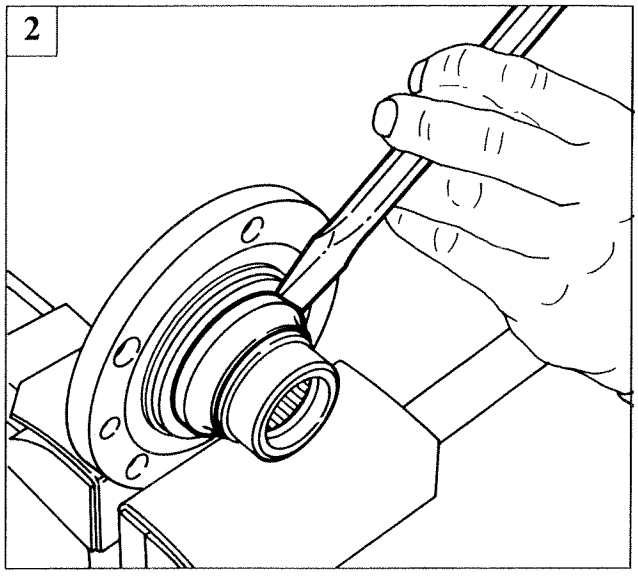

P3U005G02

3

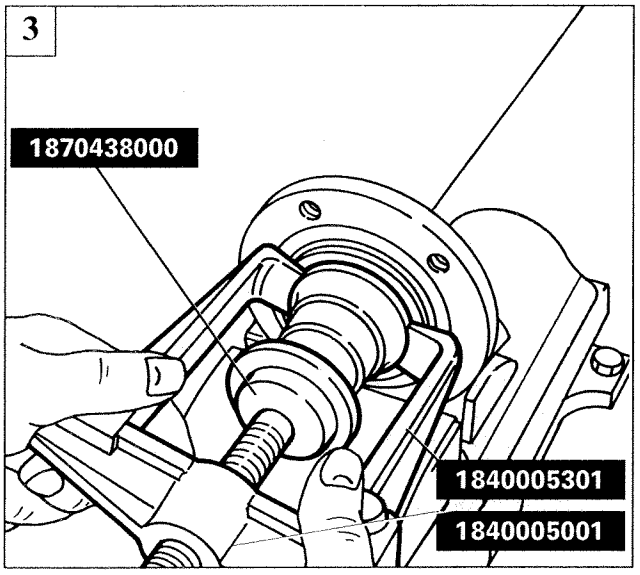

P3U005G03

Wheel hub

1. Dismantle the hub from the vertical link using a press;
2. push aside the hub bearing inner race;
3. withdraw the bearing inner race using tools 1840005001, 1840005301 and 1870438000;
4. remove the bearing circlip;
5. withdraw the bearing outer race on a press, using tool 1875055000;

4

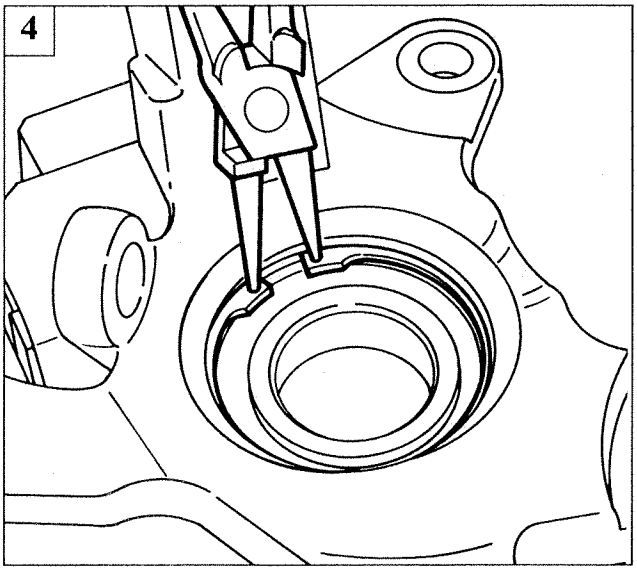

P3U005G04

5

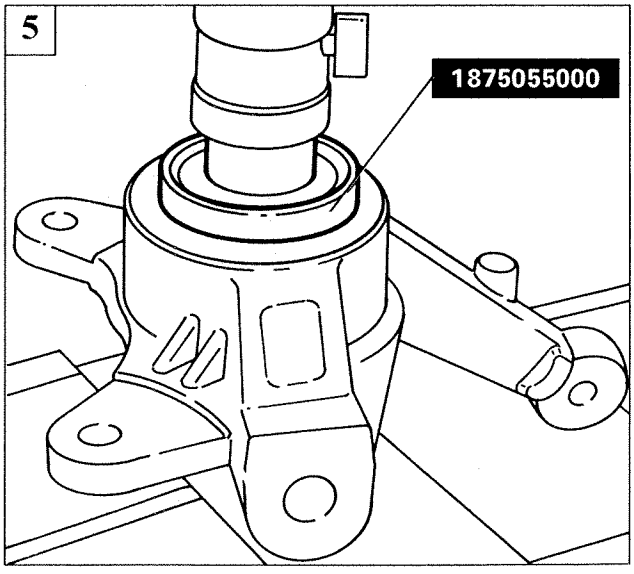

P3U005G05

Copyright Fiat Auto

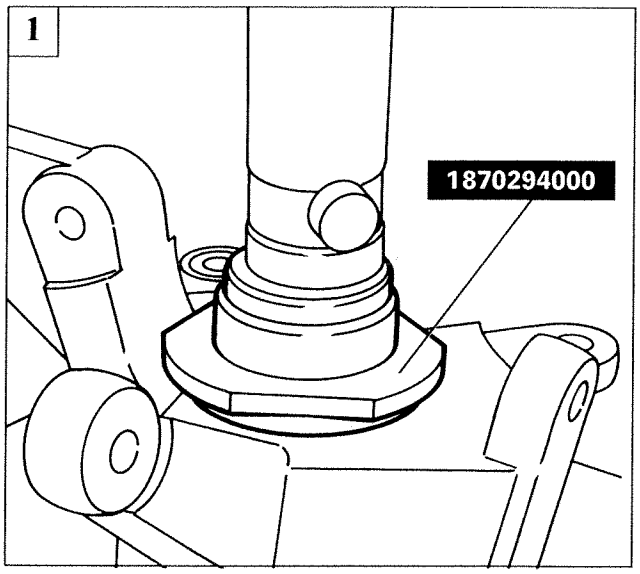

1. fit the bearing, on a press, using tool 1870294000;

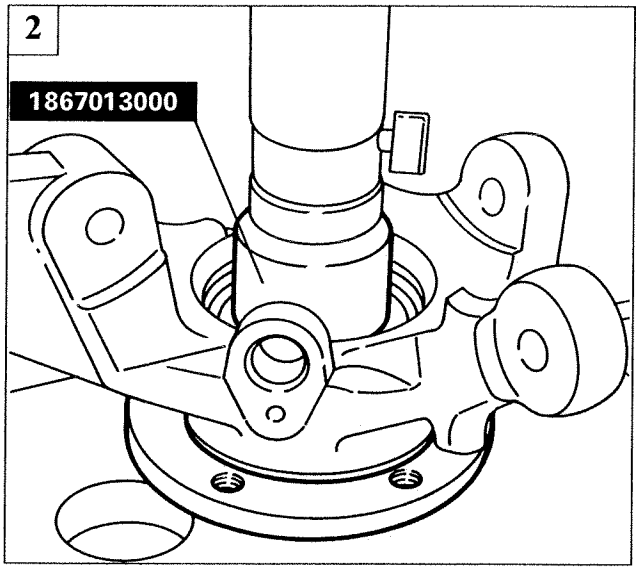

2. fit the hub, on a press, using tool 1867013000;

SPRING-SHOCK ABSORBER ASSEMBLY

Dismantling

Separate the coil spring from the shock absorber in accordance with the following procedure:

3. place the spring-shock absorber assembly on the pneumatic tool 1874555000 and adjust the lever (1) so as to lock it;
4. adjust the position of the hooks (2), bringing them close to the spring, then put pressure on the tool so that the spring begins to compress;

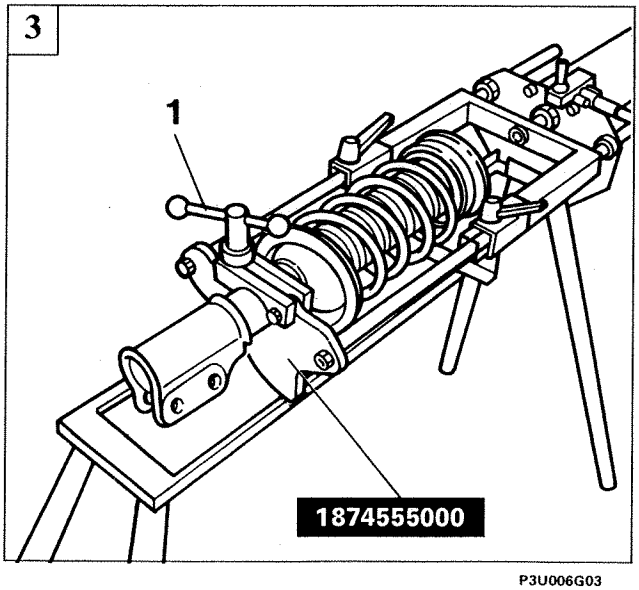

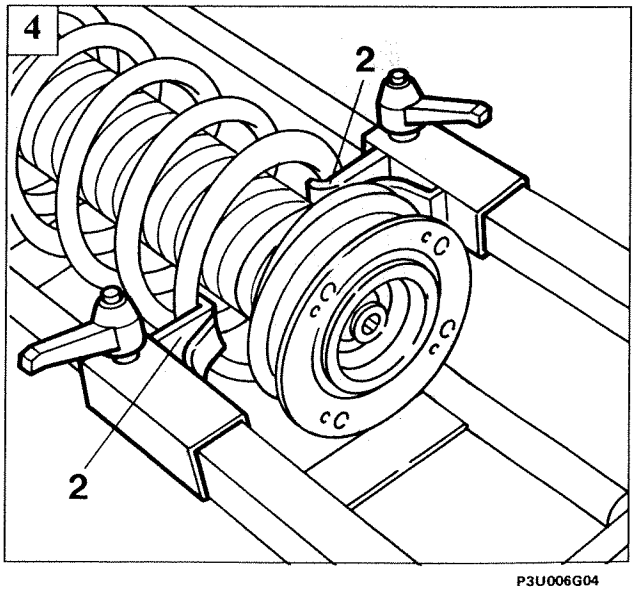

SPRING-SHOCK ABSORBER ASSEMBLY

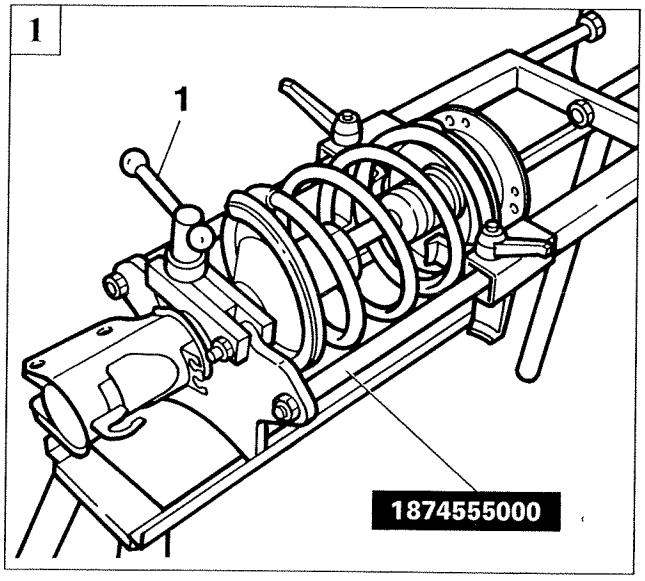

PIL01I532

Dismantling

To separate the coil spring from the shock absorber, proceed as follows:

1. place the spring-shock absorber assembly, positioned as shown in the figure, on the pneumatic tool 1874555000 and operate the lever (1) so as to lock it;

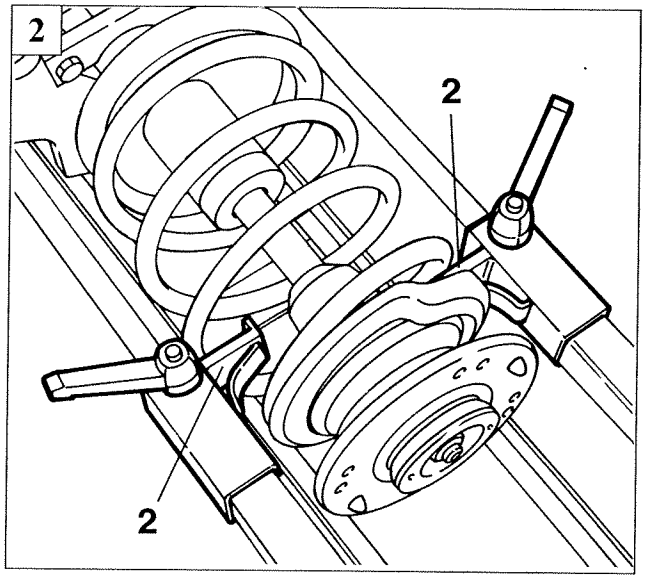

PIL01I533

2. adjust the position of the hooks (2), bringing them up to the spring, then lock them and place the tool under pressure to withdraw the spring fully parallel to the shock absorber strut;
3. using tools 1860973000 and 1857168000, undo the nut securing the mounting to the shock absorber;
4. remove the mounting and top plate, then release the pressure and remove the spring and buffer.

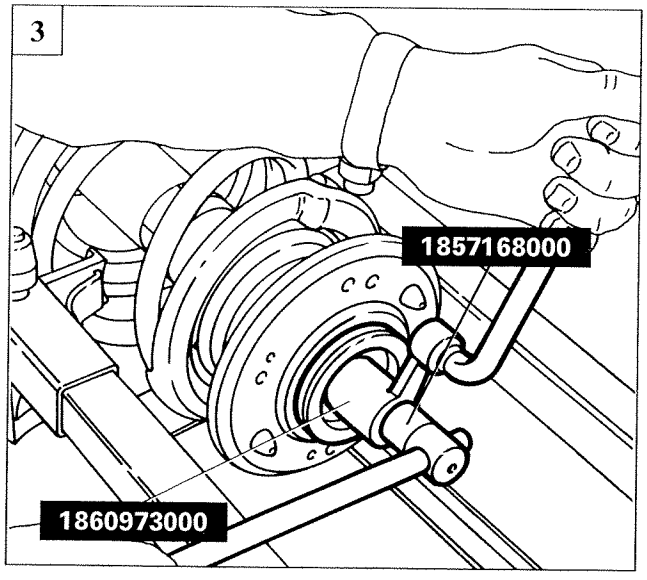

PIL01I534

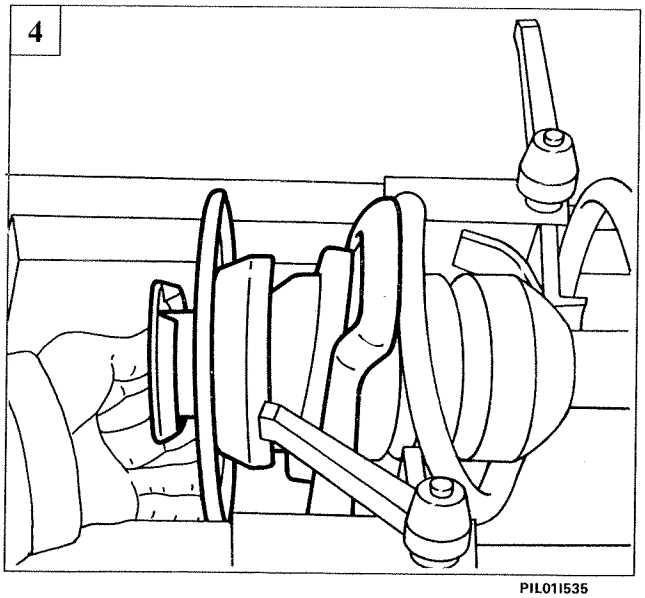

PIL01I535

Copyright Fiat Auto

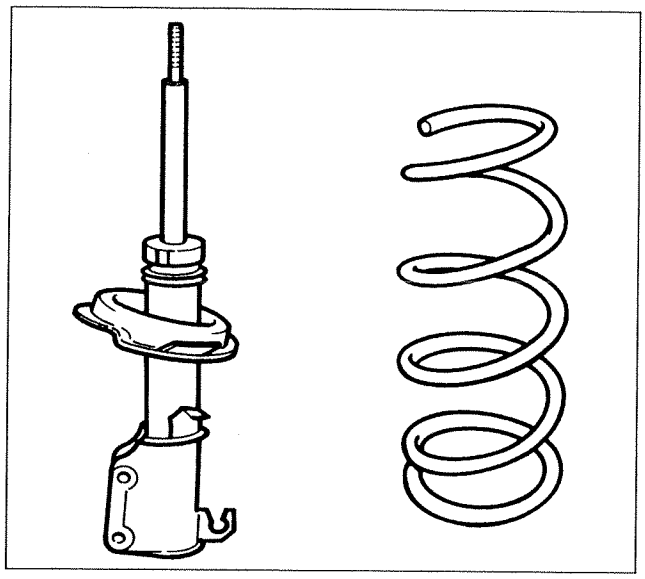

PIL011536

Shock absorber and coil spring

If the shock absorber is found to be faulty, the entire assembly should be replaced.

Make sure that the spring is not cracked or deformed such as to impair its efficiency.

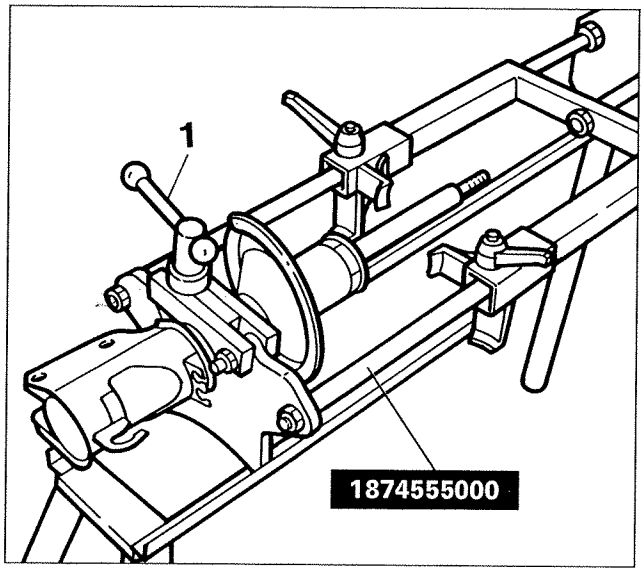

PIL011537

Refitting

To fit the coil spring on the shock absorber, proceed as follows:

- place the shock absorber, positioned as shown in the figure, on the pneumatic tool 1874555000 and operate the lever (1) so as to lock it;

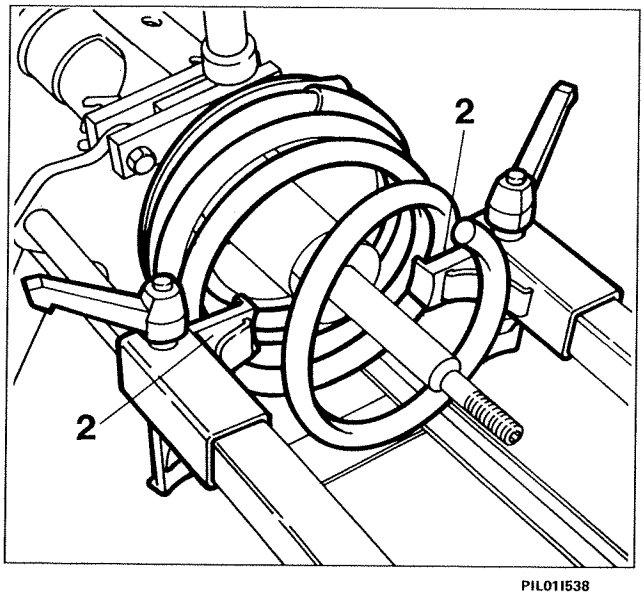

PIL011538

NOTE *The coil springs are divided into two categories, identifiable by means of a paint strip on the central coil.*
Springs of the same category must be fitted.

- fit the spring, bringing the last coil up to the shock absorber bottom plate, position the hooks (2) and place the tool under pressure until the spring is fully compressed;

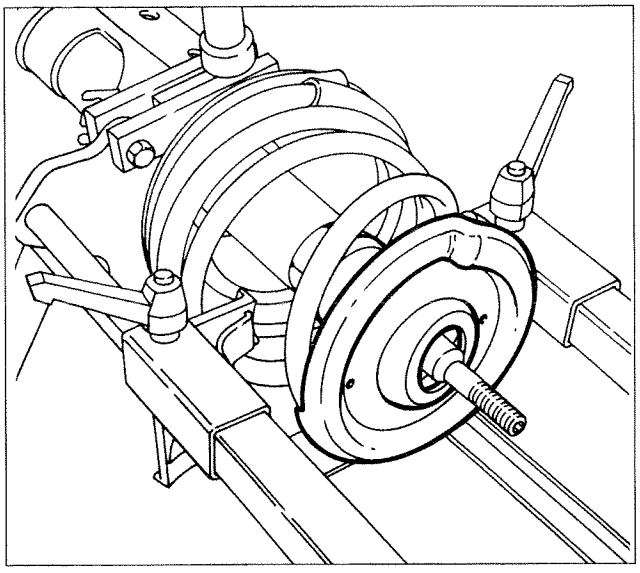

P3U020G01

- fit the buffer and top mounting by placing it next to the free coil;

NOTE *Make sure that the rubber ring is positioned correctly between the plate and spring.*

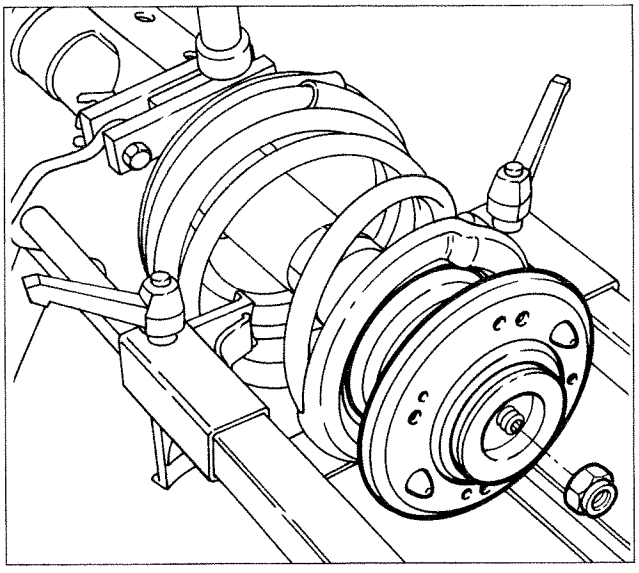

P3U020G02

- fit the mounting then tighten the nut;

The nut is screwed freely on the projecting part of the shock absorber strut. Do not, under any circumstances, use pliers or similar tools on the strut, otherwise the shock absorber will be irreparably damaged.

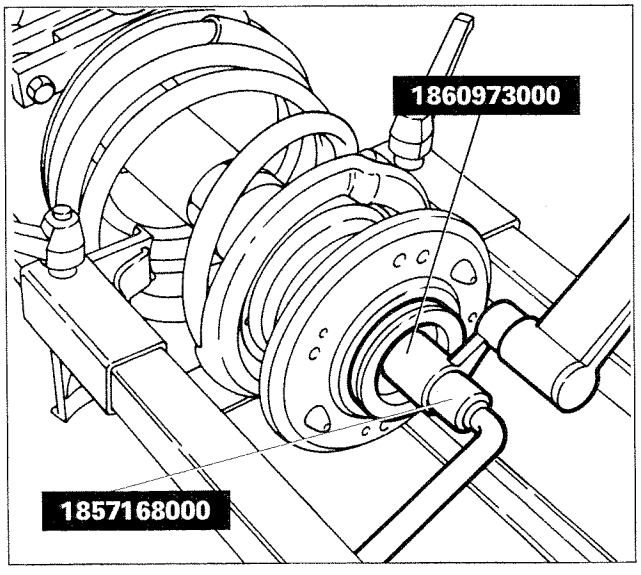

P3U020G03

7 daNm (nominal torque)
6.3 daNm (wrench calibration value)

- using tools 1860973000 and 1857168000, tighten the shock absorber strut nut to the specified torque.

Using tool 1860973000 causes a difference in tightening torque from 7 daNm to 6.3 daNm.

3U020G

44.

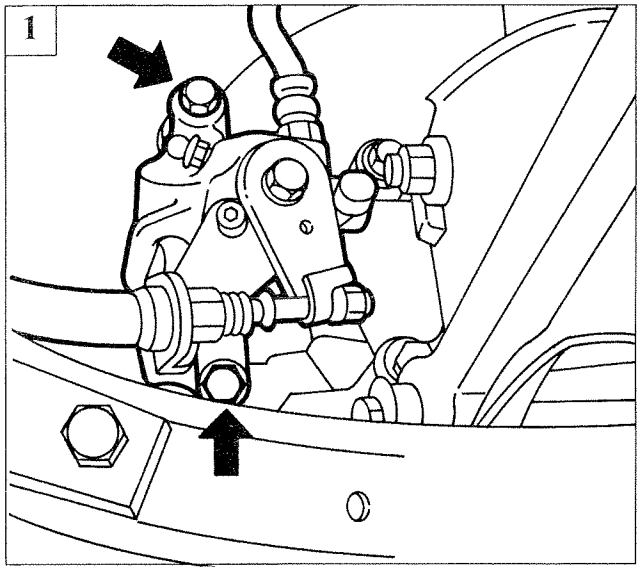

P3U020G04

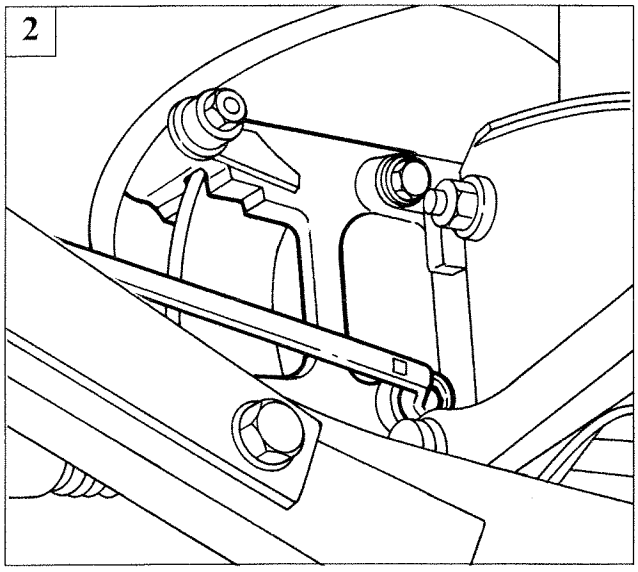

P3U020G05

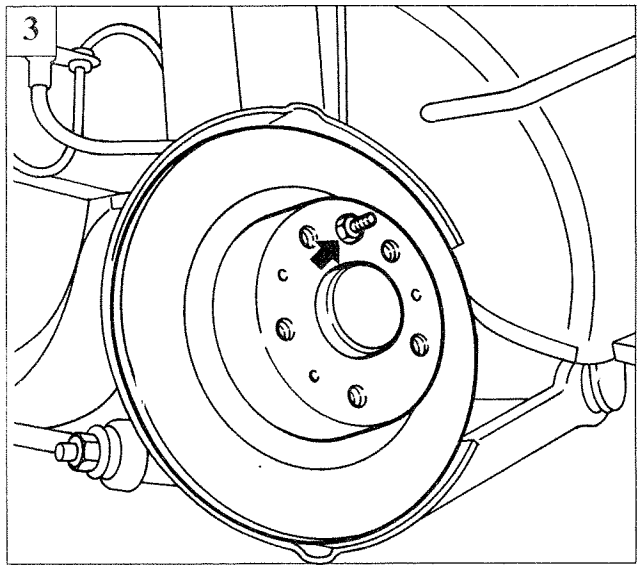

P3U020G06

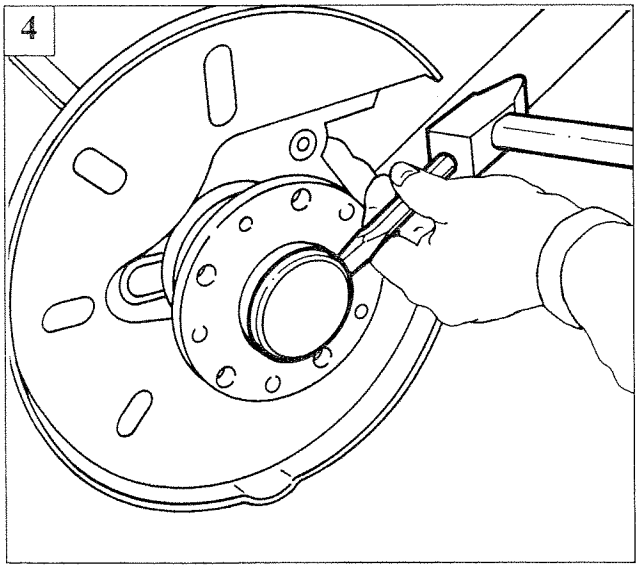

P3U020G07

REMOVING

Place the car on ramps and remove the rear wheels, then proceed as described below:

1. undo the bolts securing the brake caliper and remove the latter, then remove the brake pads;

The bolts securing the brake caliper are self-locking and must be replaced whenever they are slackened or removed.

2. undo the bolts securing the caliper mounting bracket and remove it;
3. undo the brake disc bolt and remove it.

Wheel hub

4. Using a chisel, remove the hub cover;

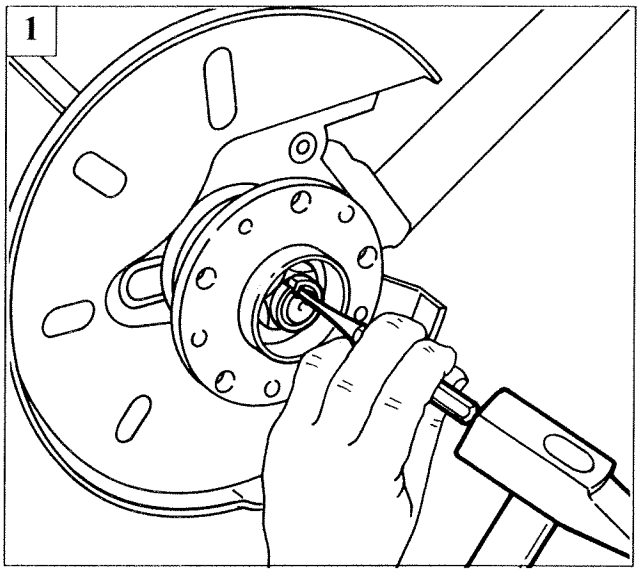

P3U009G01

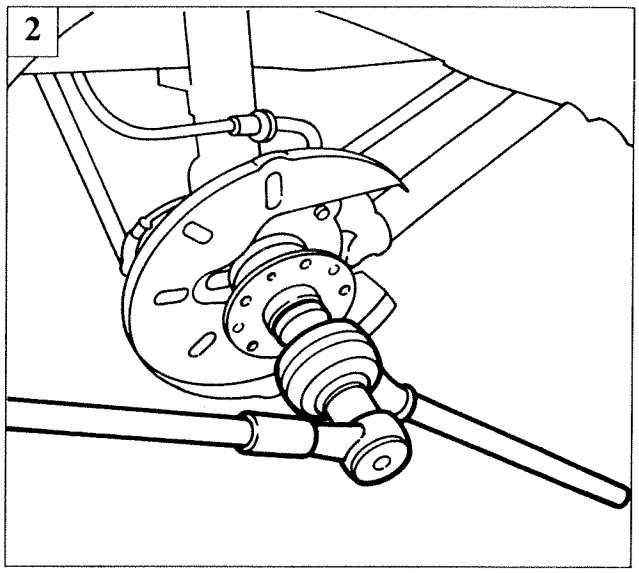

P3U009G02

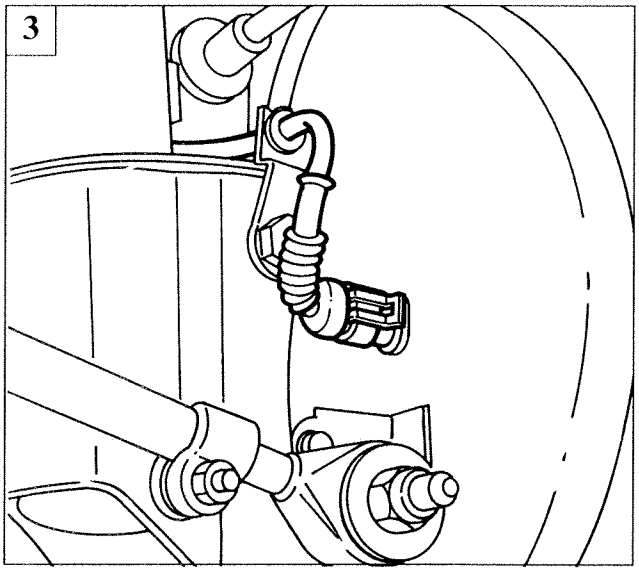

P3U009G03

1. relieve the staking on the hub nut;
2. undo the hub nut;
3. disconnect the connector for the rear wheel speed sensor;

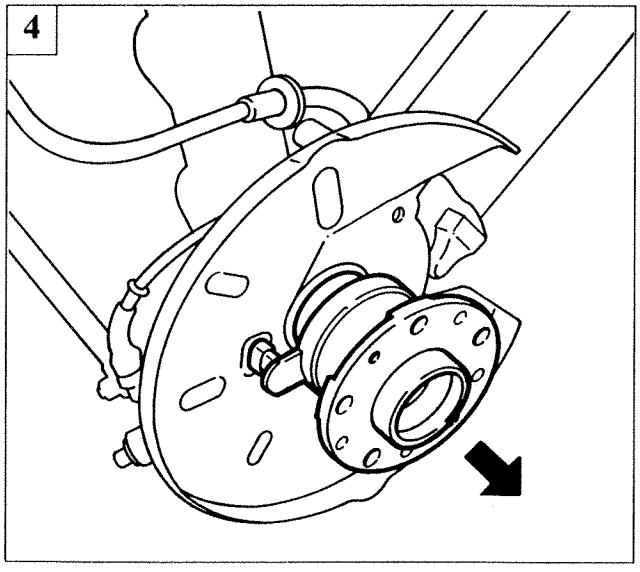

P3U009G04

4. remove the wheel hub;

NOTE *The wheel hub is integrated with the bearing and rear wheel speed sensor. The three parts cannot be separated, so in the case of a fault or malfunction of the rear wheel speed sensor, the complete wheel hub will have to be replaced.*

Check that the bearing is not noisy and or with excessive play.
Otherwise the complete wheel hub will have to be replaced.

Copyright Fiat Auto

44.

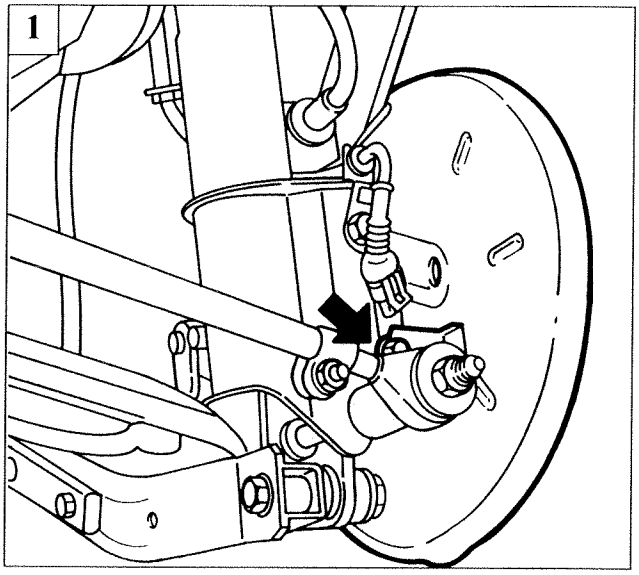

P3U010G01

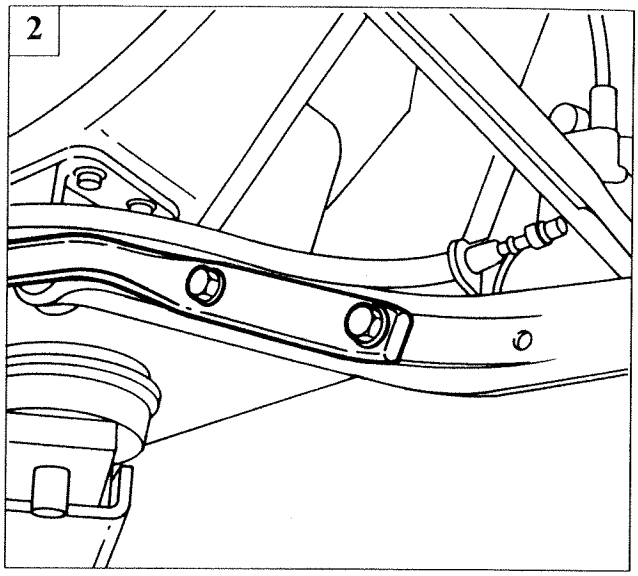

P3U010G02

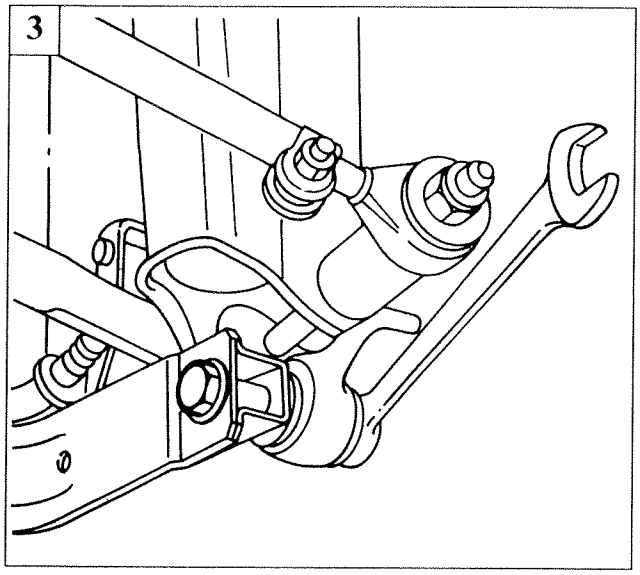

P3U010G03

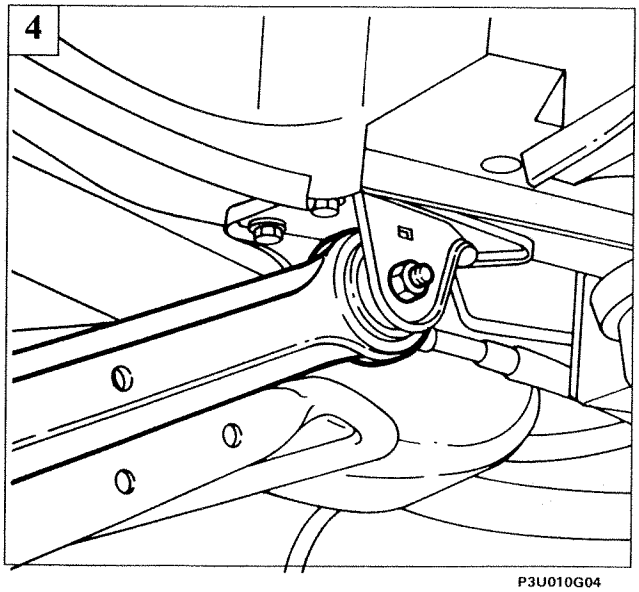

P3U010G04

Longitudinal arm

1. Undo the bolt and remove the dust shield;
2. undo the bolts securing the anti-roll bar to the longitudinal arm;
3. undo the bolt securing the longitudinal arm to the stub axle;

4. undo the bolt securing the longitudinal arm to the bodywork and remove the longitudinal arm;

The rubber bush must not be cracked or worn, otherwise the complete longitudinal arm will have to be replaced.

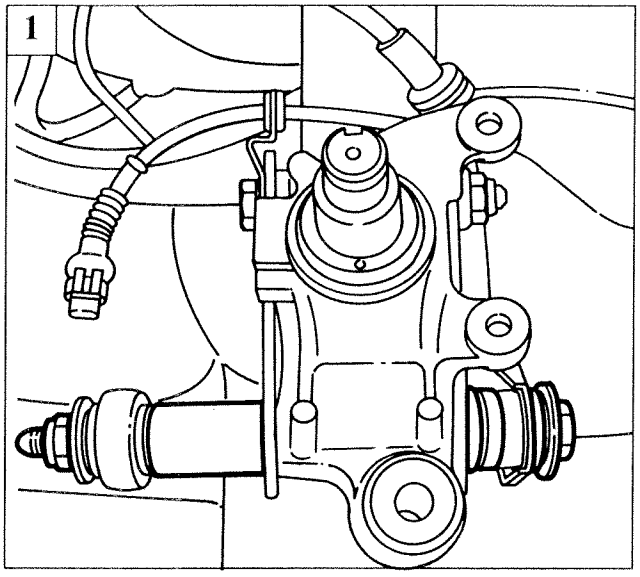

P3U011G01

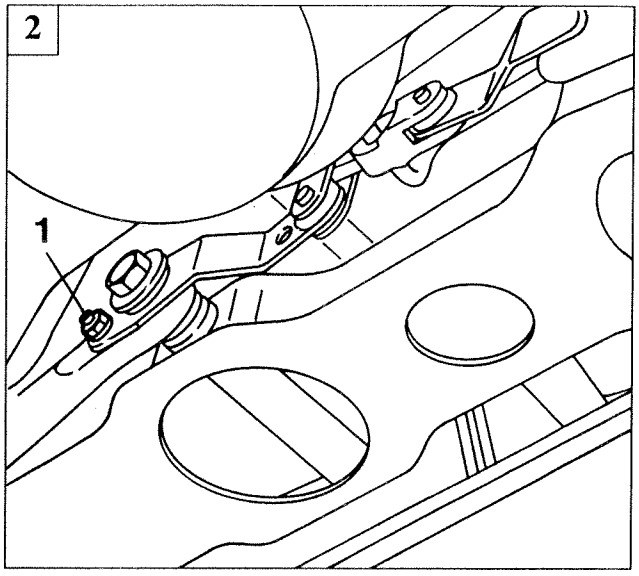

P3U032D01

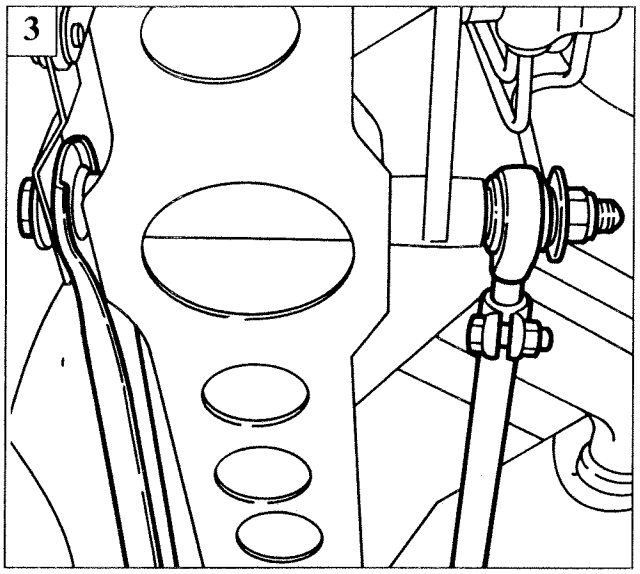

P3U011G02

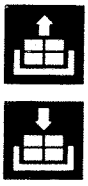

Transveral rods

1. undo the bolt securing the transversal rods and shock absorber to the stub axle and remove the bushes and spacers;
2. undo the bolt securing the load proportioning valve braket to the transversal rod;
3. undo the bolt securing the transversal rods to the rear cross beam, then remove the transversal rods.

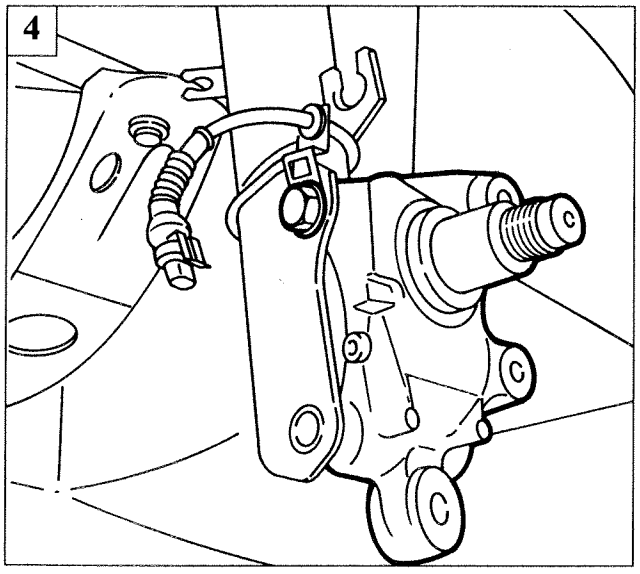

P3U011G03

Stub axle

4. Undo the top bolt securing the shock absorber to the stub axle and remove the shock absorber;



The stub axle must not be cracked, deformed or worn, otherwise it will have to be replaced.

Copyright Fiat Auto

44.

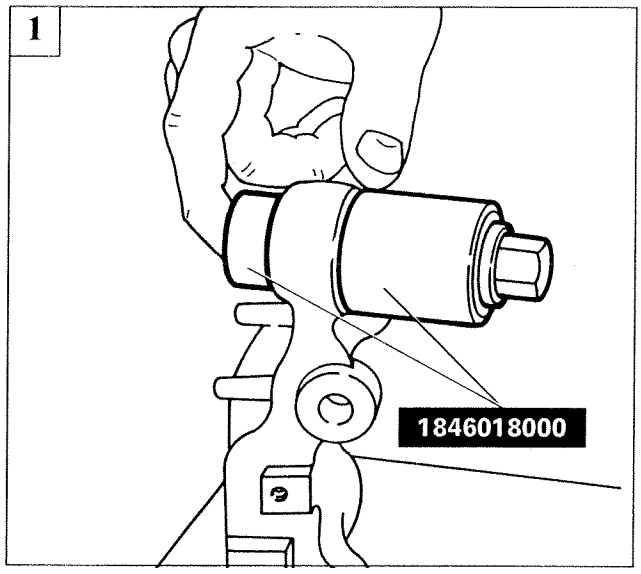

P3U012G01

DISMANTLING - REFITTING

1. Use tool 1846018000 to withdraw the bush from the stub axle;

The rubber bush must not be cracked or worn, otherwise it will have to be replaced.

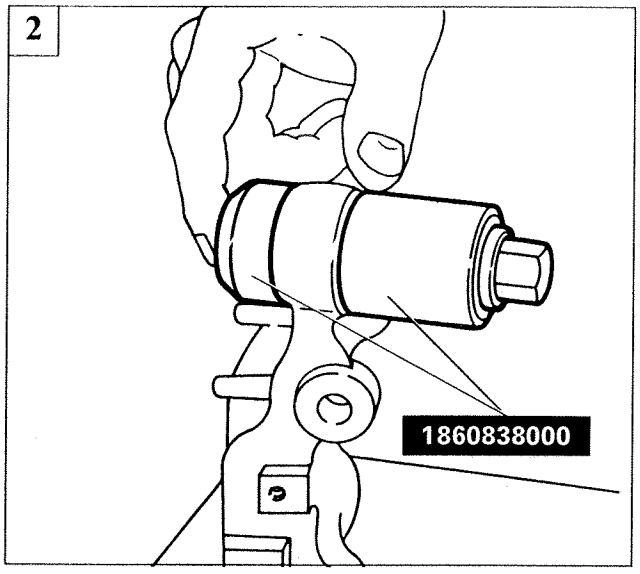

P3U012G02

2. use tool 1860838000 to fit the bush in the stub axle.

REFITTING

To refit, reverse the procedure for removal, tightening the various suspension components to the specified torques.

Tighten the hub nut to the specified torque and stake it, in accordance with the following procedure:
- always use a new nut;
- thoroughly clean the threaded tip of the stub axle using a metal brush, and then using compressed air;
- apply Loctite 270 (or an equivalent product) on the whole threaded section of the stub axle tip;

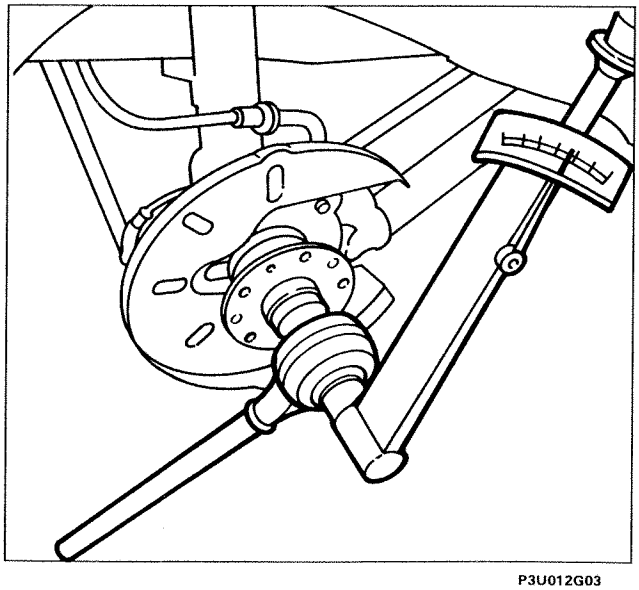

P3U012G03

32 daNm

- tighten the new nut to the specified torque within 5 minutes of applying the adhesive;
- stake the nut collar.

The collar should be cut on the notch of the hub on the side contrary to that of tighening, so as to present greater resistance to spontaneous slackening.

Also check rear wheel geometry

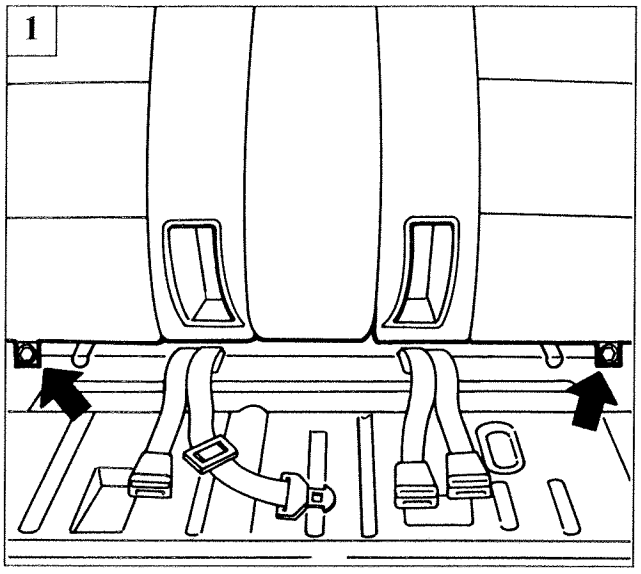

P3U013G01

SPRING-SHOCK ABSORBER ASSEMBLY

Removing-refitting

Place the car on ramps and remove the rear wheels, then proceed as described below:

1. Remove the rear seat, which is a press fit, then undo the bolts securing the rear squab to the body shell and withdraw the squab upwards to release it from the hooks;

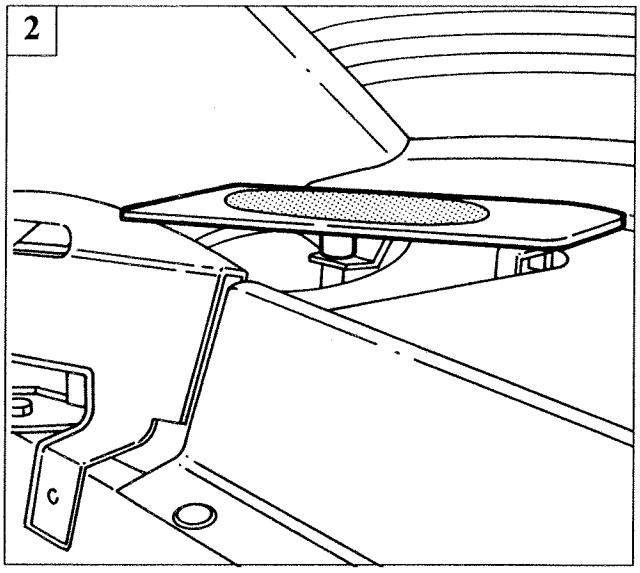

P3U013G02

2. remove the rear loudspeaker housing;
3. remove the rear seat belt winder cover (a screw is located in the loudspeaker compartment, and is not visible in the figure);
4. undo the bolts and remove the winder mounting;

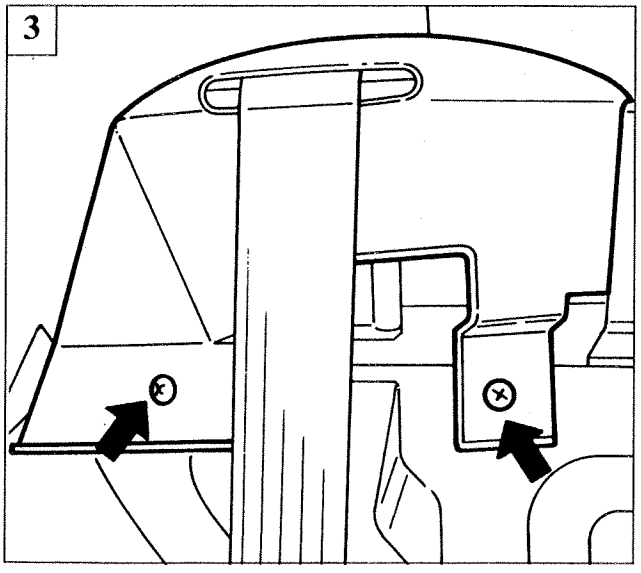

P3U013G03

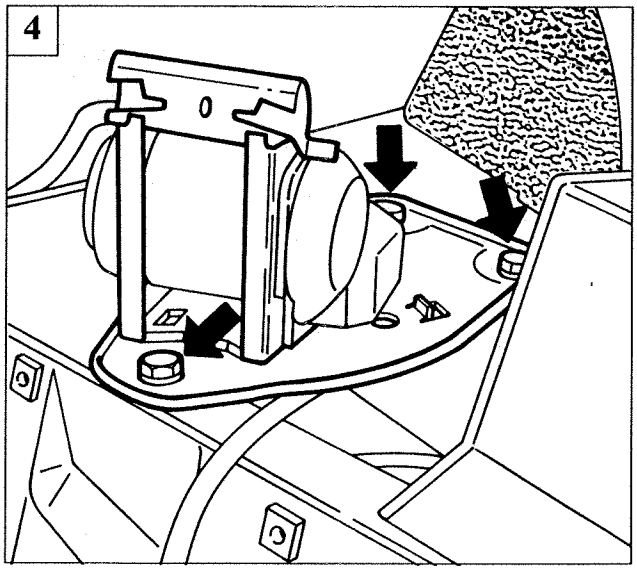

P3U013G04

Copyright Fiat Auto

44.

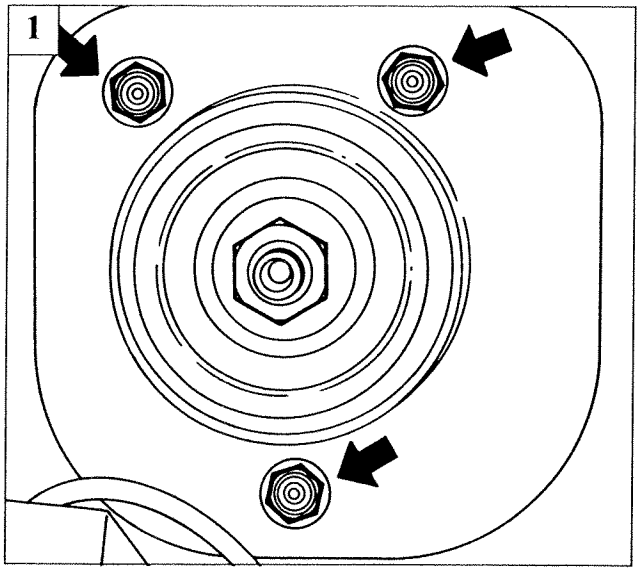

P3U014G01

1. undo the nuts securing the spring-shock absorber assembly to the body shell;

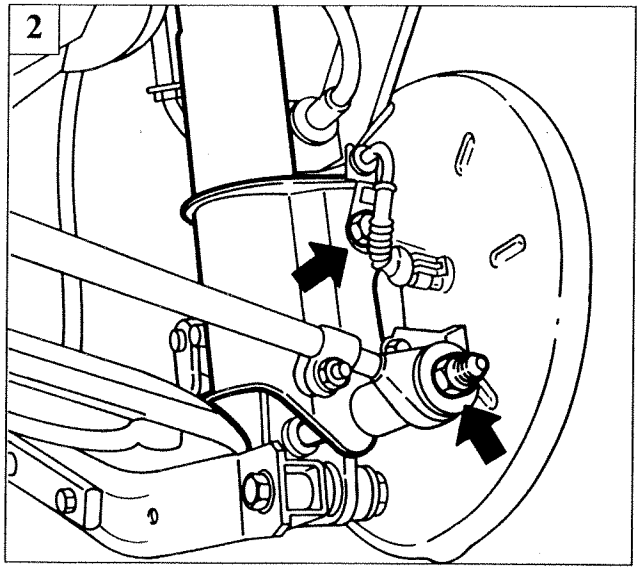

P3U014G02

2. undo the two bolts securing the spring-shock absorber assembly to the stub axle and remove the assembly.

Dismantling

3. Place the spring-shock absorber assembly on the pneumatic tool 1874555000 and adjust the lever (1) so as to lock it;
4. adjust the position of the hooks (2), bringing them closer to the spring, then put pressure on the tool so that the spring begins to compress;

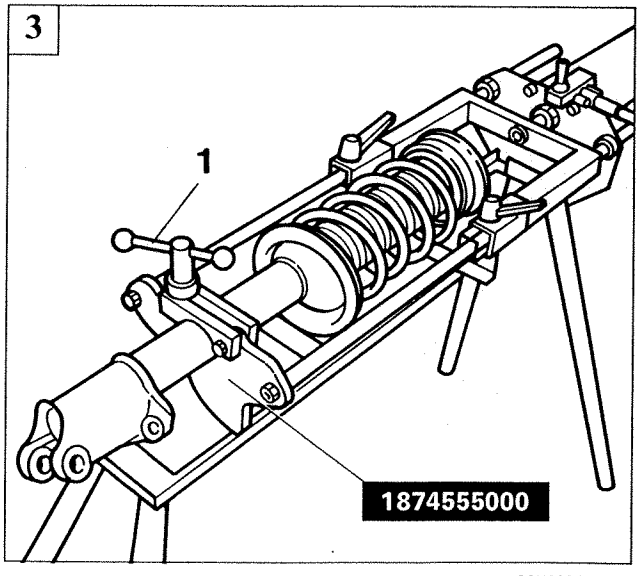

P3U014G03

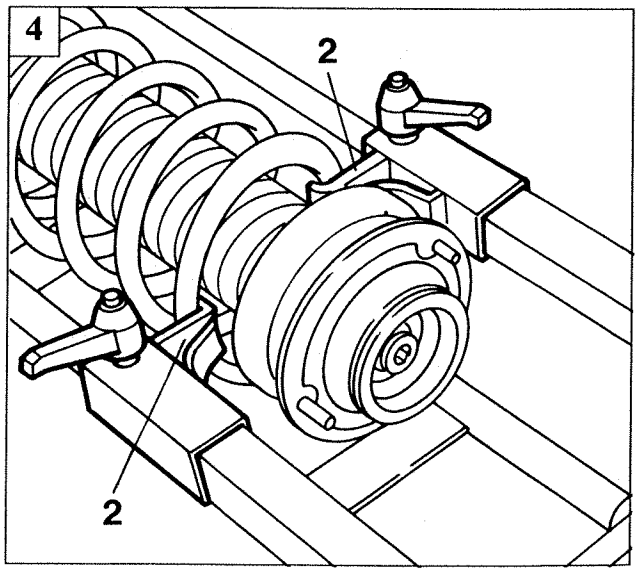

P3U014G04

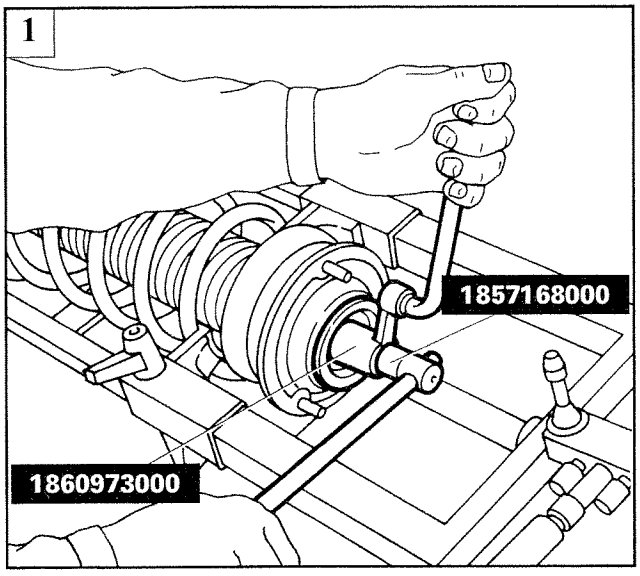

P3U015G01

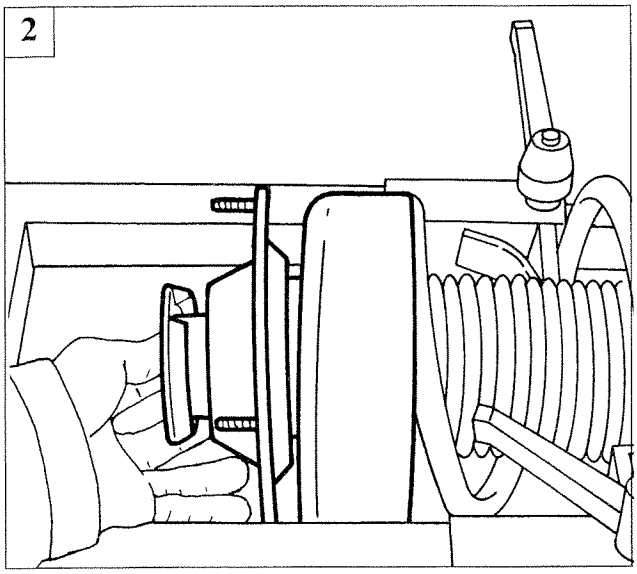

P3U015G02

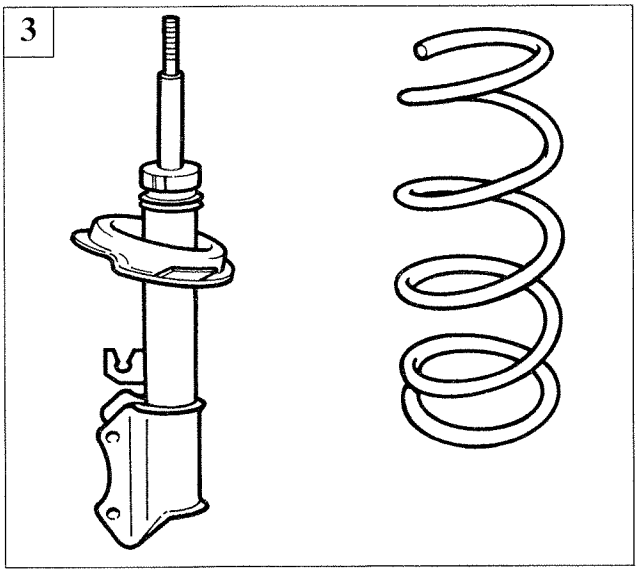

P3U015G03

1. undo the nut securing the mounting to the shock absorber;
2. remove the top mounting, then decompress the spring and remove it;
3. shock absorber and coil spring:
   - if faults are found in the shock absorber, the whole unit should always be replaced;
   - make sure that the spring is not cracked or deformed such that its efficiency is impaired.

NOTE *The coil springs are divided into two categories, identifiable by means of a paint stripe on the central coil. Matching springs of the same category must be fitted.*

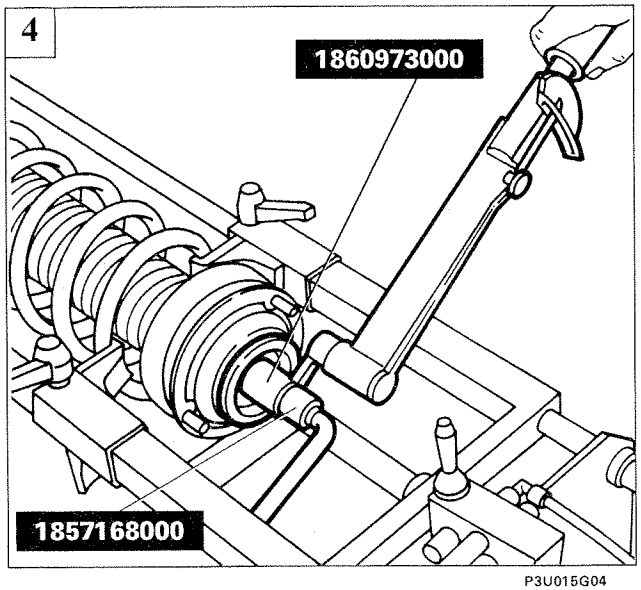

P3U015G04

7 daNm (nominal torque)
6.3 daNm (wrench calibration value)

Refitting

4. refit the components in reverse order to removal and tighten the shock absorber strut nut to the correct torque using tools 1860973000 and 1857168000.

Using tool 1860973000 causes a difference in tightening torque from 7 daNm to 6.3 daNm.

44.

1

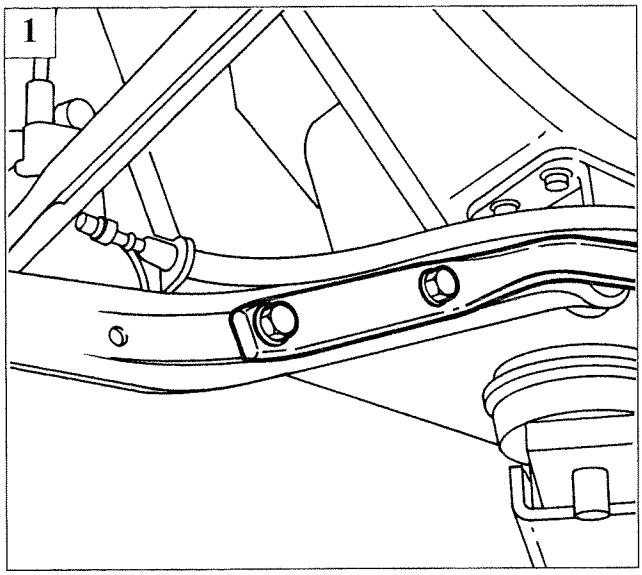

P3U016G01

2

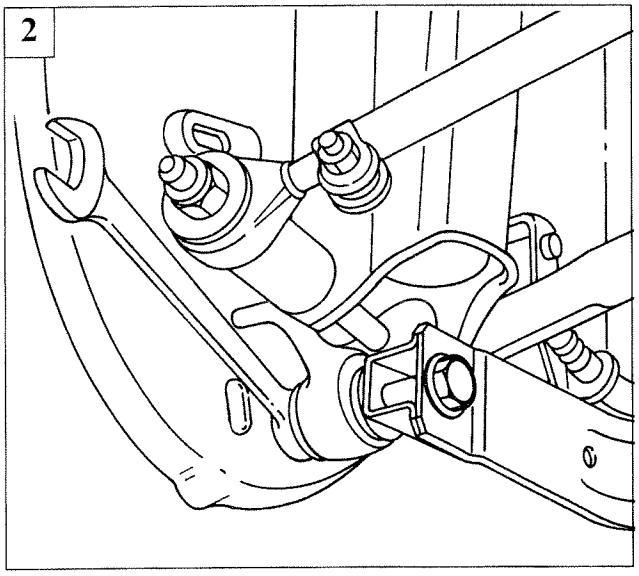

P3U016G02

3

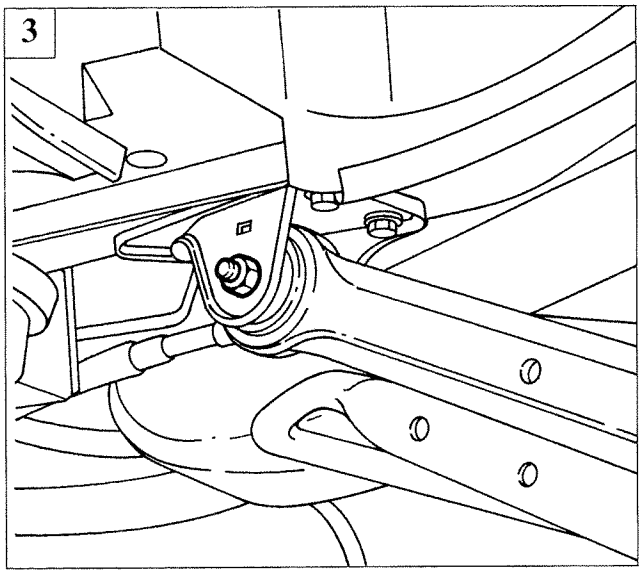

P3U016G03

STUB AXLE BUSH

Place the car on ramps and remove the rear wheels, then proceed as described below:

1. Undo the bolts securing the longitudinal arm to the stabilizer bar;
2. undo the bolt securing the longitudinal arm to the stub axle;
3. slacken the nut on the pin of the longitudinal arm;
4. use tool 1846018000 to withdraw the bush from the stub axle;
5. use tool 1860838000 to fit the bush on the stub axle.

NOTE *Fit the longitudinal arm by reversing the procedure for removal.*

4

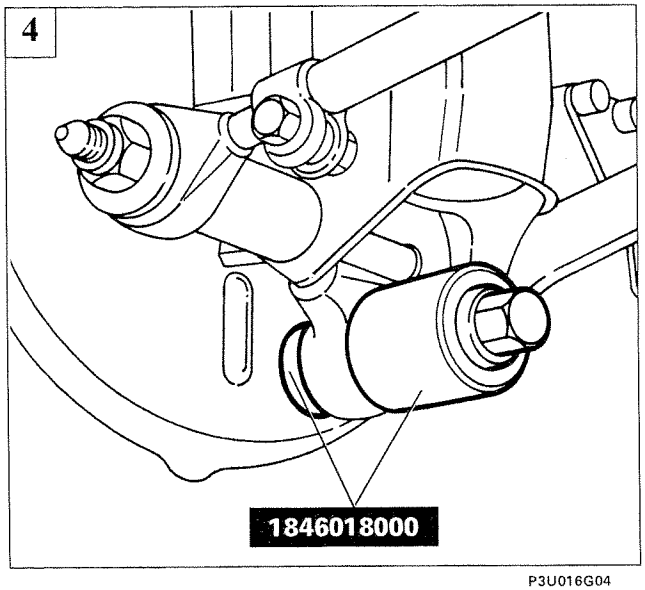

P3U016G04

5

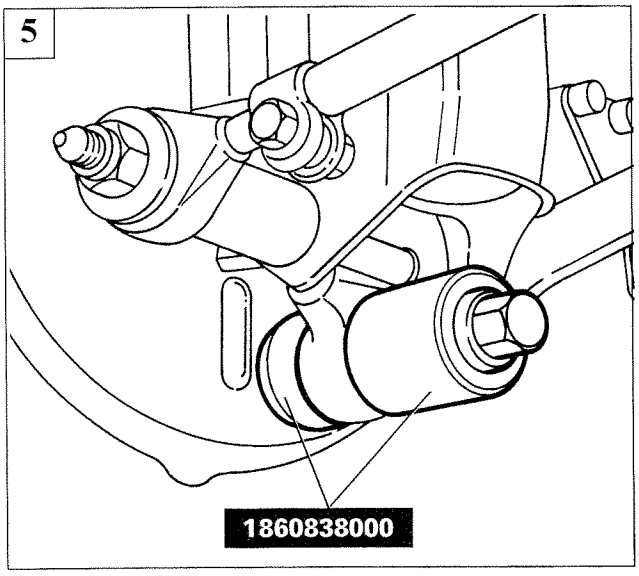

P3U016G05

FRONT WHEEL GEOMETRY

The wheel geometry must be checked after subjecting the components which affect the wheel geometry to the following checks:
- tyre pressures;
- the eccentricity and out of true of the wheel rims must not exceed 3 mm;
- wheel bearing endfloat;
- play between vertical link and wishbone balljoint;
- play between balljoint and steering tie rod.

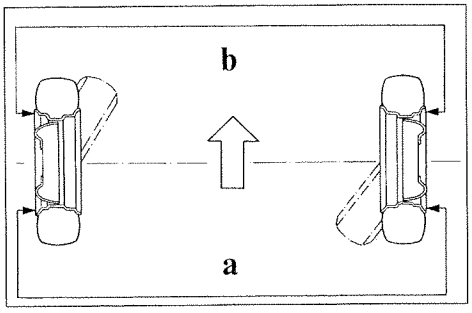

P3U017G01

TOE-IN

a-b = 0-2 mm

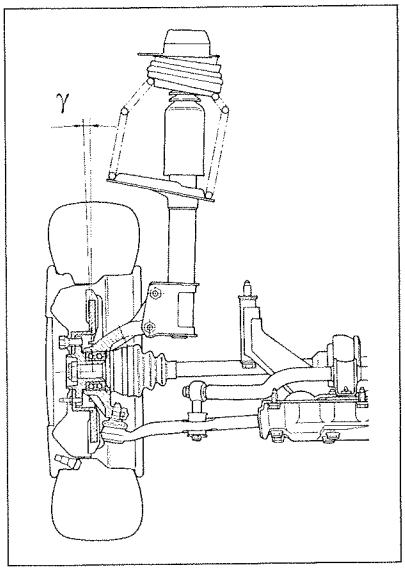

P3U017G02

CAMBER (non adjustable)

γ = -0° 35' ÷ -1° 15'

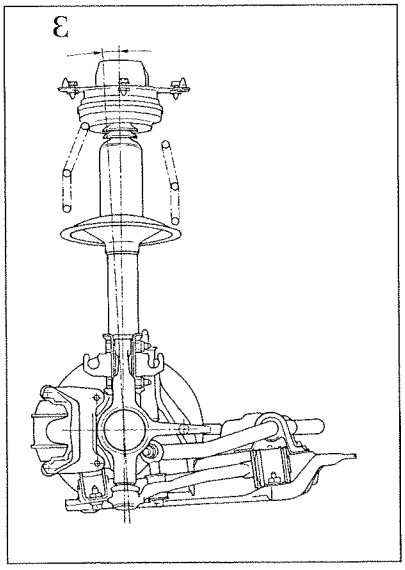

P3U017G03

CASTER (non adjustable)

ε = 2° 50'-3° 30'

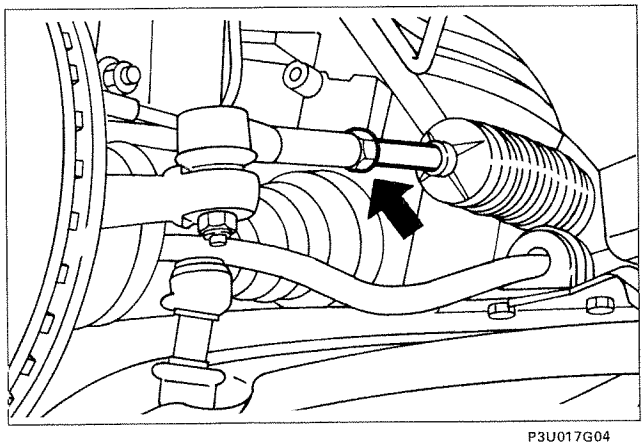
P3U017G04

When checking the toe-in, if the values measured are different from those specified, adjust the steering tie rods after first slackening the nuts.

If the wheel camber angle is different from the specified value, the bodyshell must be subjected to a check.

44.

REAR WHEEL GEOMETRY

The wheel geometry must be checked after carrying out the following checks:
- tyre pressures;
- the eccentricity and out of true of wheel rims must not exceed 3 mm;
- wheel bearing endfloat.

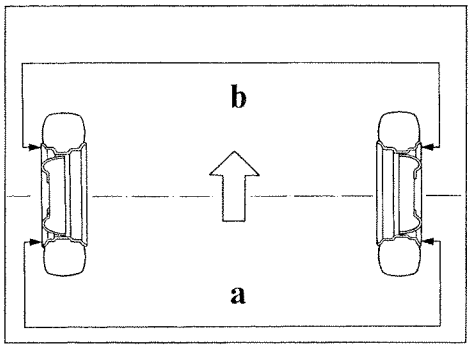

P3U018G01

TOE-IN

a-b = 1.5-3.5mm

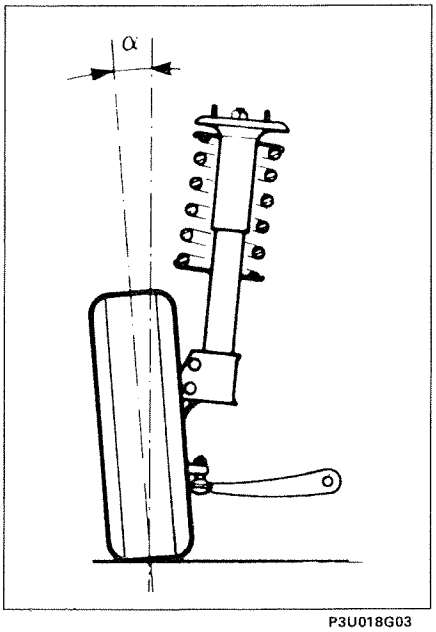

P3U018G03

CAMBER (non adjustable)

α = -0° 25'to -1° 5'

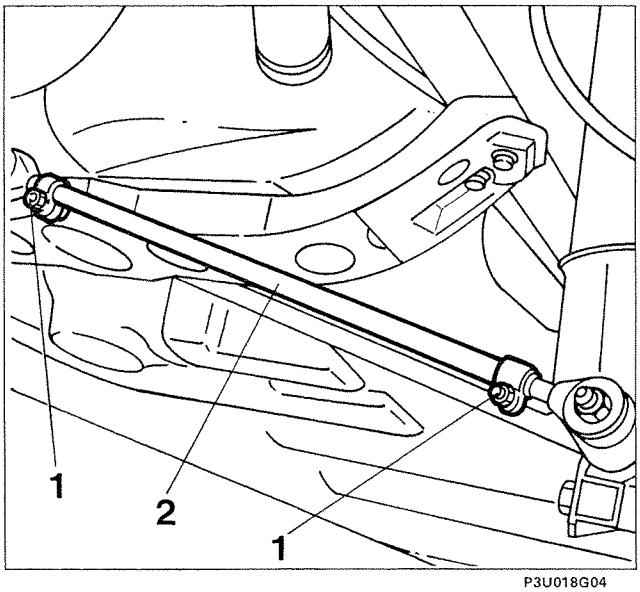

P3U018G04

When checking the toe-in, if the values measured are different from those specified, slacken the nuts (1) and rotate the rod (2) until the desired value is obtained. The adjustment must done on the tie-rods of both wheels.

If the camber angle is not as specified, the body shell must be checked.

IL20A7

WHEEL GEOMETRY

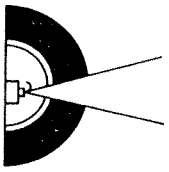



unladen car (*)

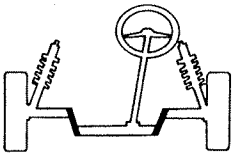 Front suspension	camber (**) 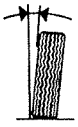	-0°35' ÷ -1°15'
	caster (**) 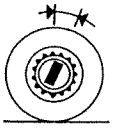	2°50' ÷ 3°30'
	toe in 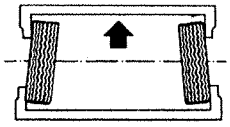	0 ÷ 2 mm
	offset front wheels ▲	0°
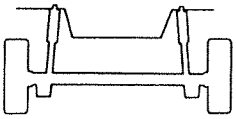 Rear suspension	camber (**) 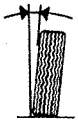	-0°25' ÷ -1°5'
	caster (**) 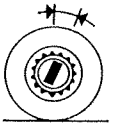	-
	toe in (**) 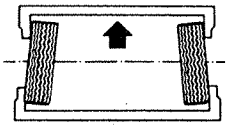	1,5 ÷ 3,5 mm
	thrust angle rear wheels ▲	0°

(*) With tyres inflated to the correct pressure and vehicle in running order
(**) Angles cannot be adjusted
(▲) Angular values which cannot be adjusted, used for the correct alignment of the vehicle

Service News

Copyright by Fiat Auto 1/97

Fiat Auto S.p.A
D.M.C. - M.P.S. - Servizi Post Vendita
Assistenza Tecnica

LANCIA k

version: all versions

44
03.97

4450 A 000 AA **WHEEL GEOMETRY**

update to the information in the Service Manual



The information given overleaf cancels and replaces that in section 00.44 of the "LANCIA k" Service Manual.

This information is valid for all saloon versions (1st series and '96 range), as well as for the LANCIA k SW

The replacement page which should be inserted in the manual will be sent with the next update

page

ELECTRONIC DAMPING CONTROL SYSTEM (SCS) 1

- Introduction 1
- Operation 2
- Layout of the components on the vehicle 3
- Wiring diagram 4

CONTROLLED DAMPING SHOCK ABSORBERS (APA-KYB) 6

DIAGRAM OF INPUT/OUTPUT INFORMATION BETWEEN CONTROL UNIT AND SENSORS/ACTUATORS 8

ELECTRONIC CONTROL UNIT 9

- Control unit out-pin connectors 10
- Management of settings 11
- Calculating angular rotation of steering wheel and relevant speed 15
- Auto-adapting to steering angle zero position 16
- Calculation of vehicle speed 16
- Diagnosis 17
- Recovery 19

OPTICAL STEERING SENSOR 20

MOTOR INTERCEPTORS 22

PROGRAM SELECTOR SWITCH 26

VERTICAL ACCELERATION SENSOR 26

VEHICLE SPEED SENSOR 27

Copyright Fiat Auto

COPYRIGHT FIAT AUTO

The reproduction, even partial, of the text and illustrations is prohibited.

The information contained in this publication is purely indicative and could be out of date following modifications made by the Manufacturer, at any time, for technical or commercial reasons or in order to conform to legal requirements in the various countries.

Fiat Auto S.p.A.
Direzione Marketing e Commerciale
Servizi al Cliente - Servizi Post Vendita
10134 TORINO (Italy) - Corso E. Giambone, 33
Publication no. 506.475/6 - Novembre 1995 - 400
Printed in Italy - Tip. Bogliani - TORINO
order no. 60489571

INTRODUCTION

The requirement for greater comfort and ease of driving has recently led to the development of more sophisticated suspension systems.
The purpose of this innovation is to ensure maximum driveability in safety, together with a high level of comfort, even in the most critical driving conditions.

To clarify the concept of the new suspension, a few general points should be made.

The suspension is the set of components between the wheels and the vehicle's chassis, with the triple task of:

- protecting the vehicle's various mechanisms by attenuating impacts and vibrations caused by the roughness of the road surface;
- ensuring the best possible comfort;
- improving road holding.

In general, to obtain high comfort the suspension components (springs and dampers) need to be adjusted in a manner which is often in conflict with the requirements for safe driving on the road; SOFT settings are for comfort, while HARD settings improve road holding.
The manufacturer can choose the most appropriate settings in accordance with the characteristics and performance of the model.

By using electronics, and thanks to the achievements reached in component technology, new possibilities have opened for further improving the comfort and driveability of the vehicle, by acting on the following parameters:

- characteristics of the damping components (shock absorbers);
- characteristics of the flexible components (spring ridigity, anti-roll bar, bushes, buffers).

On the basis of these elements, two types of suspension may be identified:
A - traditional suspension;
B - controlled damping suspension (S.C.S.).

A - Traditional suspension
The setting of the shock absorbers' damping action cannot be changed if the driving conditions vary.
In this case the shock absorbers' setting is selected at the design stage, in accordance with the characteristics of each model.

B - Controlled damping suspension (S.C.S.)
The system allows the setting of the shock absorbers' damping action to be varied in accordance with the driving and road surface conditions.
The system can change in real time from hard to medium to soft settings and vice versa, on the basis of signals coming from sensors which detect the vehicle's driving conditions.
The system offers safe and comfortable driving by selecting settings of the front and rear shock absorbers in accordance with:
- the selected program (AUTO - SPORT);
- the style of driving adopted by the driver;
- the road surface conditions.

Copyright Fiat Auto

44.

OPERATION

This system allows the driver to choose between two operating logics by using the "AUTO" - "SPORT" switch on the dashboard:

- "AUTO" operation (switch off) and green "AUTO" warning light on;
- "SPORT" operation (switch on) and yellow "SPORT" warning light on.

Operation in "AUTO" mode

With the "AUTO" selection, the level of damping is continuously adjusted in accordance with the input signals within the settings permitted by the system: "SOFT", "MEDIUM" or "HARD".
The "AUTO" selection activates the program which automatically selects the damping level from among the three settings "SOFT", "MEDIUM" and "HARD", depending on the vehicle's driving conditions and the road surface.

So, depending on the suitably processed signals coming from:

- vehicle speed sensor (2),
- optical steering sensor (3),
- vehicle vertical acceleration sensor (4),

the electronic control unit (1) supplies the four motor interceptors (5) located in the shock absorbers, thus enabling the system to change in real time from hard to medium settings, from medium to soft settings, and vice versa.

Operation in "SPORT" mode

This function maintains the "HARD" setting of the suspension constantly, so that the car drives almost in a "race" manner.

Fault diagnosis

The system has a "Self-test" program which constantly tests the system's components. If there is a fault, it selects the "HARD" setting (safety mode) and indicates to the driver that a fault is present by means of the Infocenter display.

NOTE *In the drawings and diagrams below, the connectors are viewed from the side opposite the cable input side, unless otherwise stated.*

LAYOUT OF COMPONENTS ON THE VEHICLE

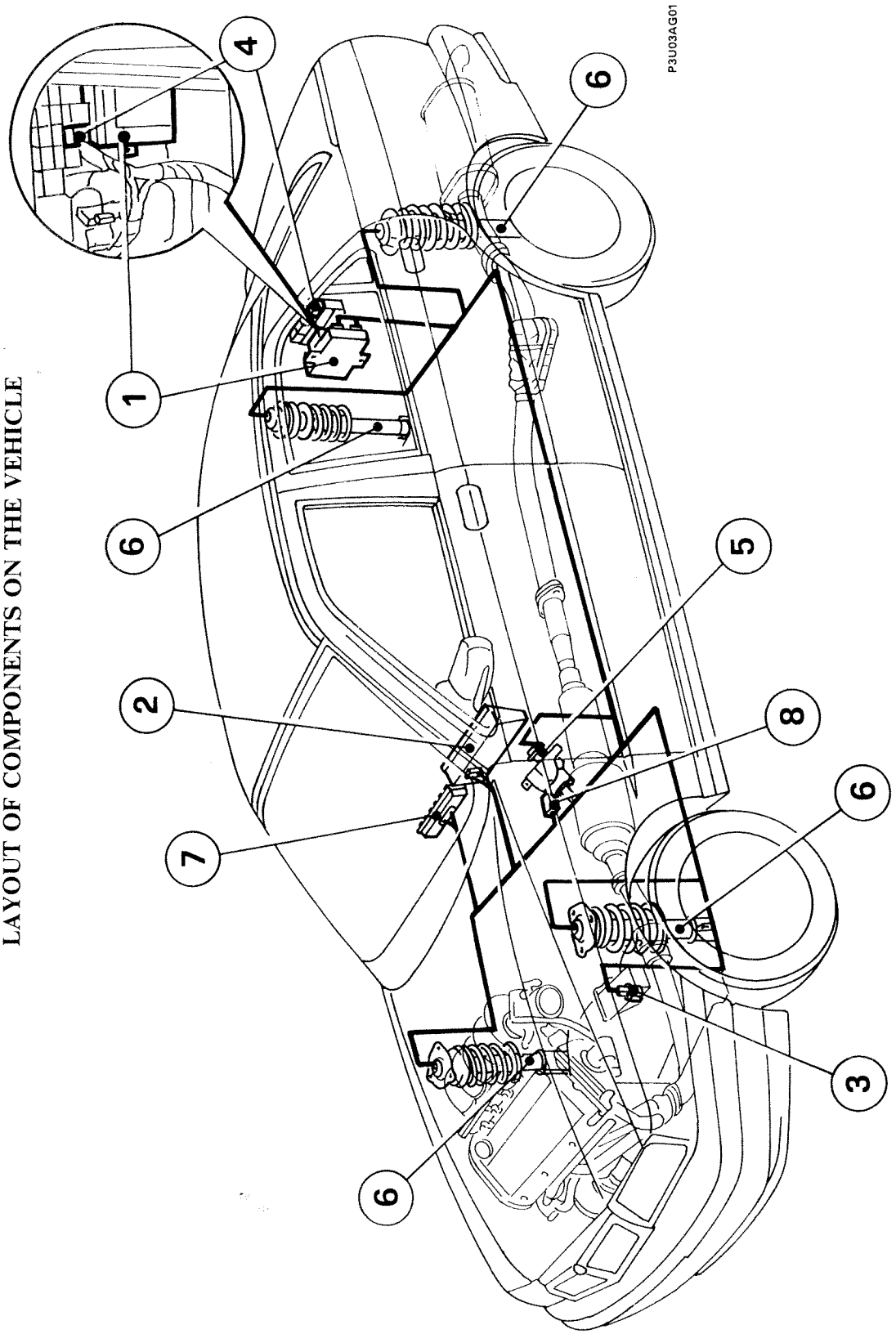

1. Damping control unit
2. Program selector switch and warning lights
3. Vehicle speed sensor
4. Fuse
5. Optical steering sensor
6. Motor interceptors (incorporated in shock absorbers)
7. Infocenter (fault indication)
8. Vertical acceleration sensor

Copyright Fiat Auto

44.

WIRING DIAGRAM

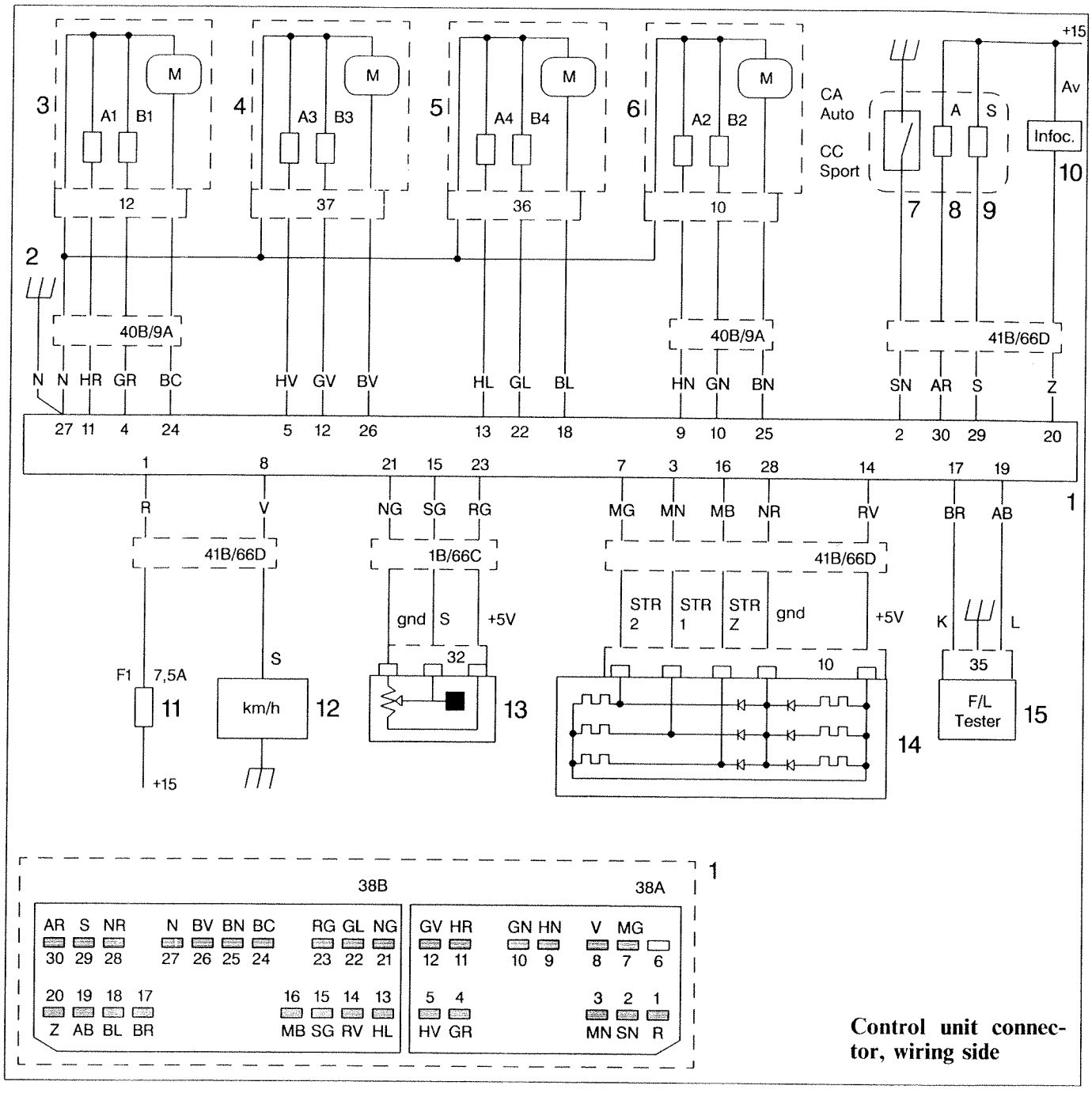

Control unit connector, wiring side

P3U04AG01

NOTE *The numbers inside the dotted lines indicate the number of the connector given in the key to the wiring diagrams (see Section 55).*

1. Damping control unit
2. Control unit earth
3. Motor interceptor and F.L. position signals
4. Motor interceptor and R.L. position signals
5. Motor interceptor and R.R. position signals
6. Motor interceptor and F.R. position signals
7. Program selector switch
8. "AUTO" warning light
9. "SPORT" warning light
10. Infocenter
11. Control unit supply fuse (7.5 A)
12. Vehicle speed sensor
13. Vertical acceleration sensor
14. Optical steering sensor
15. Diagnostic socket for F/L Tester

Optical steering sensor and connectors

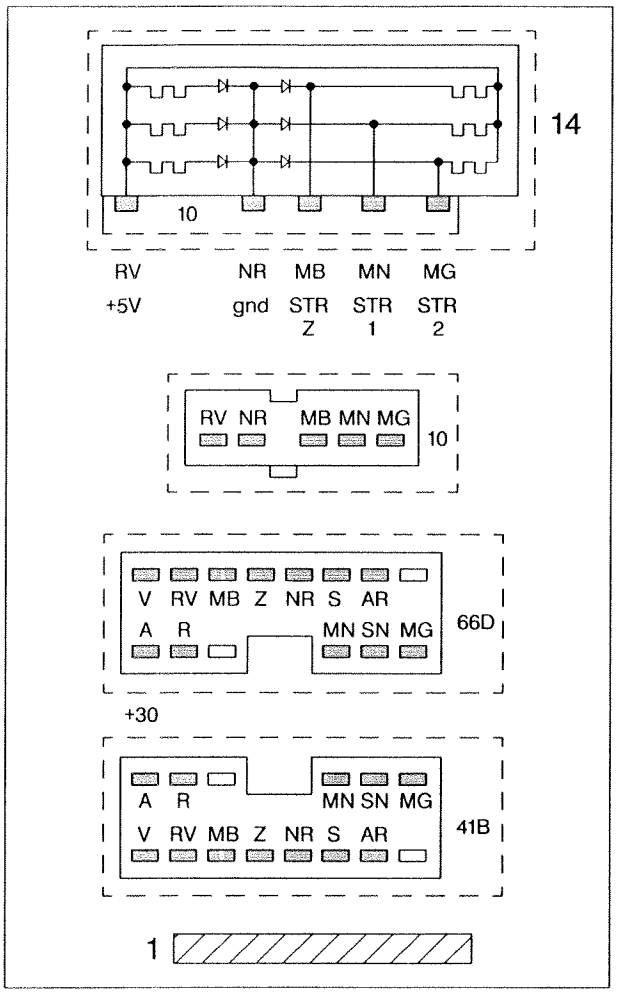

P3U05AG01

Vertical acceleration sensor and connectors

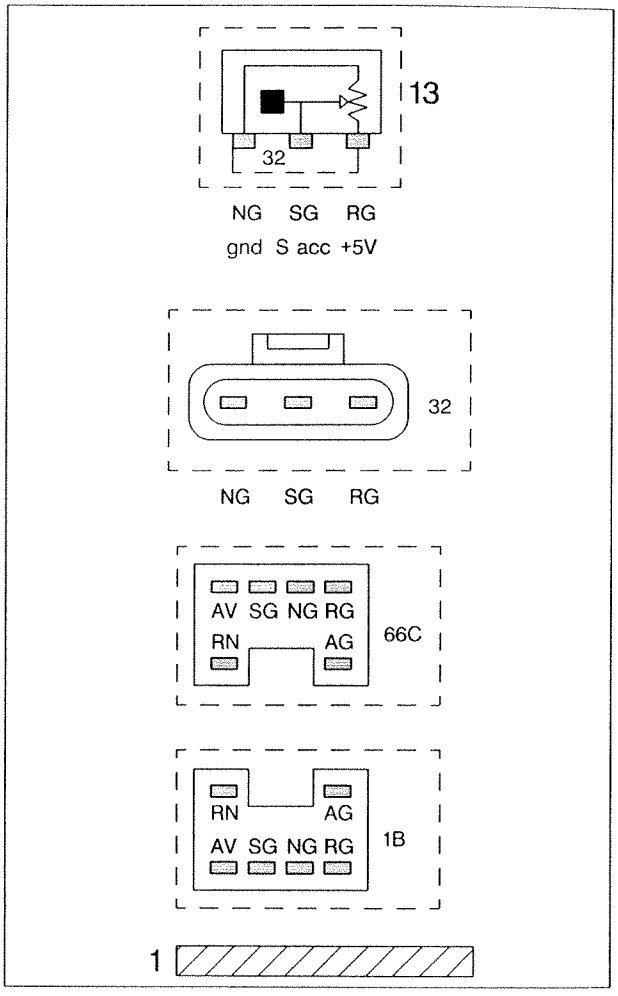

P3U05AG02

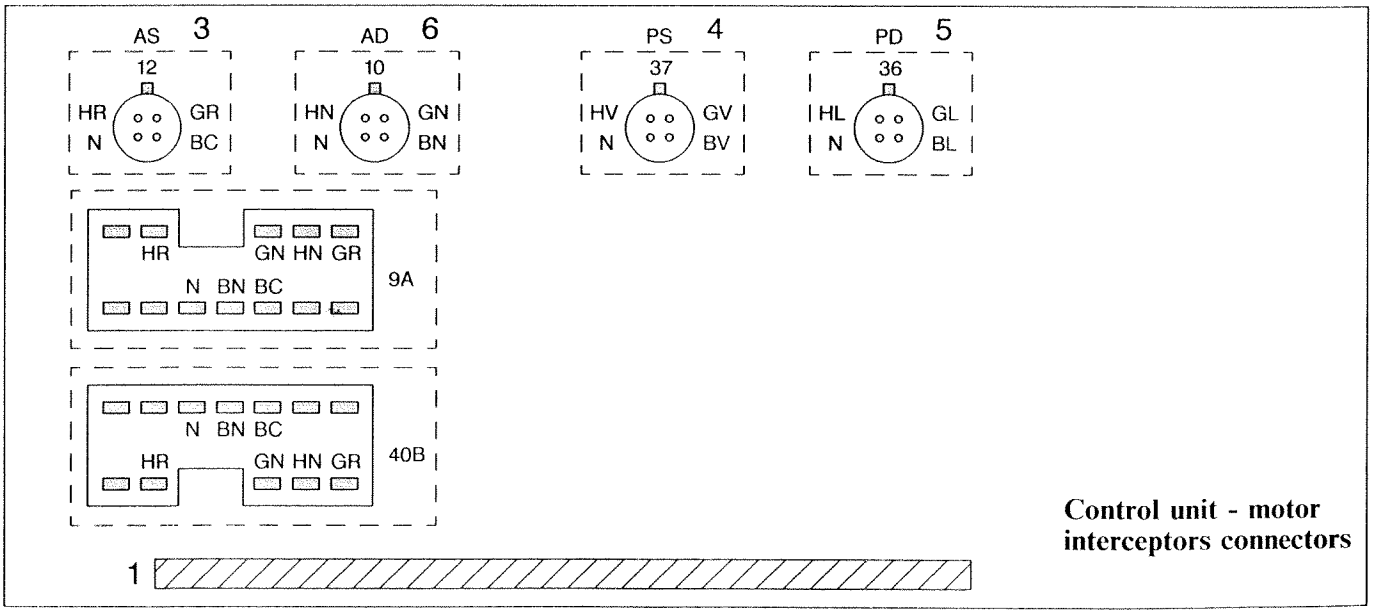

Control unit - motor interceptors connectors

P3U05AG03

44.

CONTROLLED DAMPING SHOCK ABSORBERS (APA KYB)

This consists of a pressurized oleodynamic shock absorber in which the top valves are controlled by a motor interceptor for adjusting damping.
The internal valves are calibrated so that:
a) 25% of the damping effect is provided by the bottom valves (1);
b) the remaining 75% of the damping effect is provided by the top valves (2), in turn regulated by the motor interceptor.

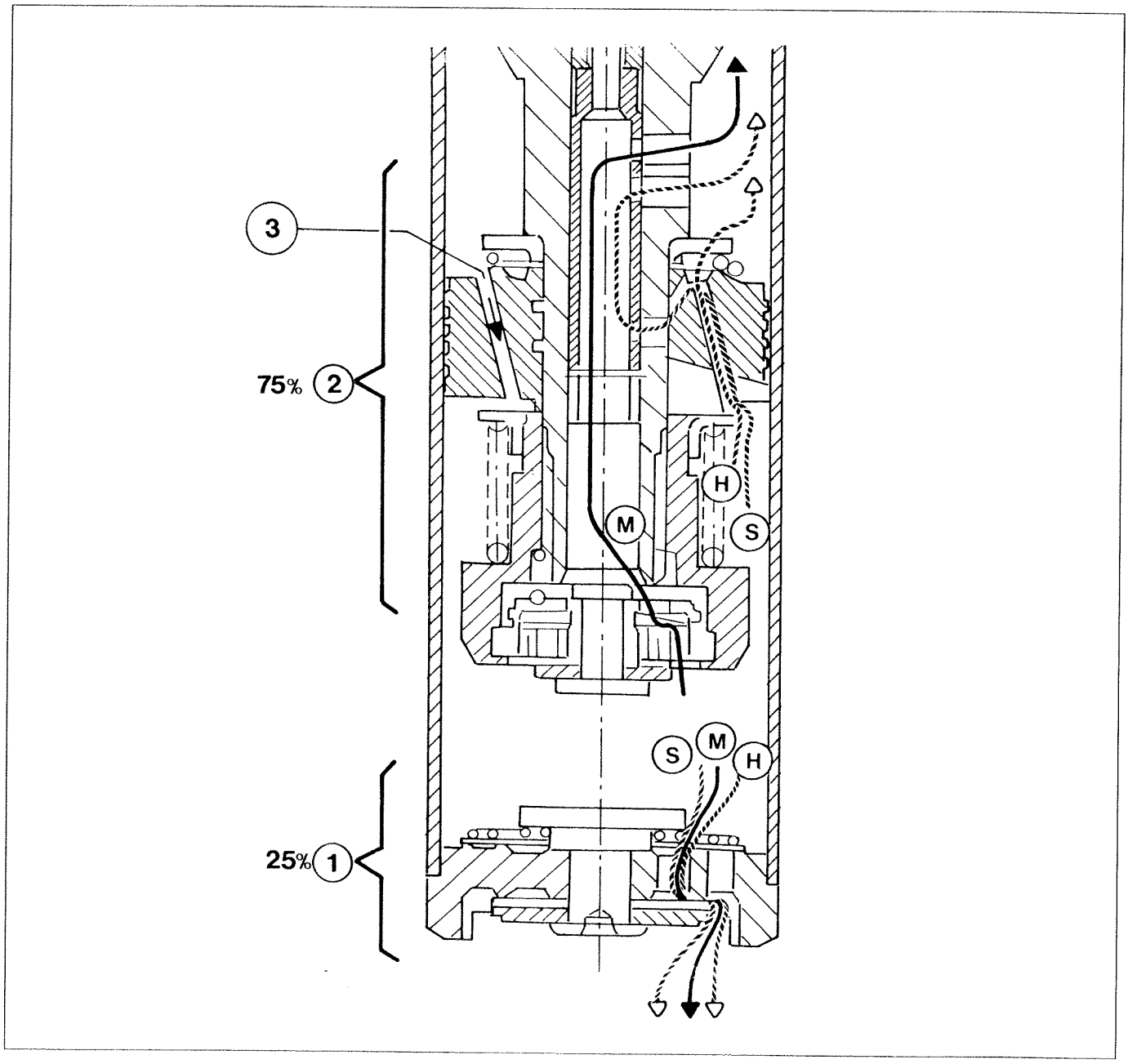

P3U06AG01

Cross section of the damper showing the valves

1. Bottom valves
2. Top valves
3. Oil return channel

H = Hard setting
H-M = Medium setting
H-M-S = Soft setting

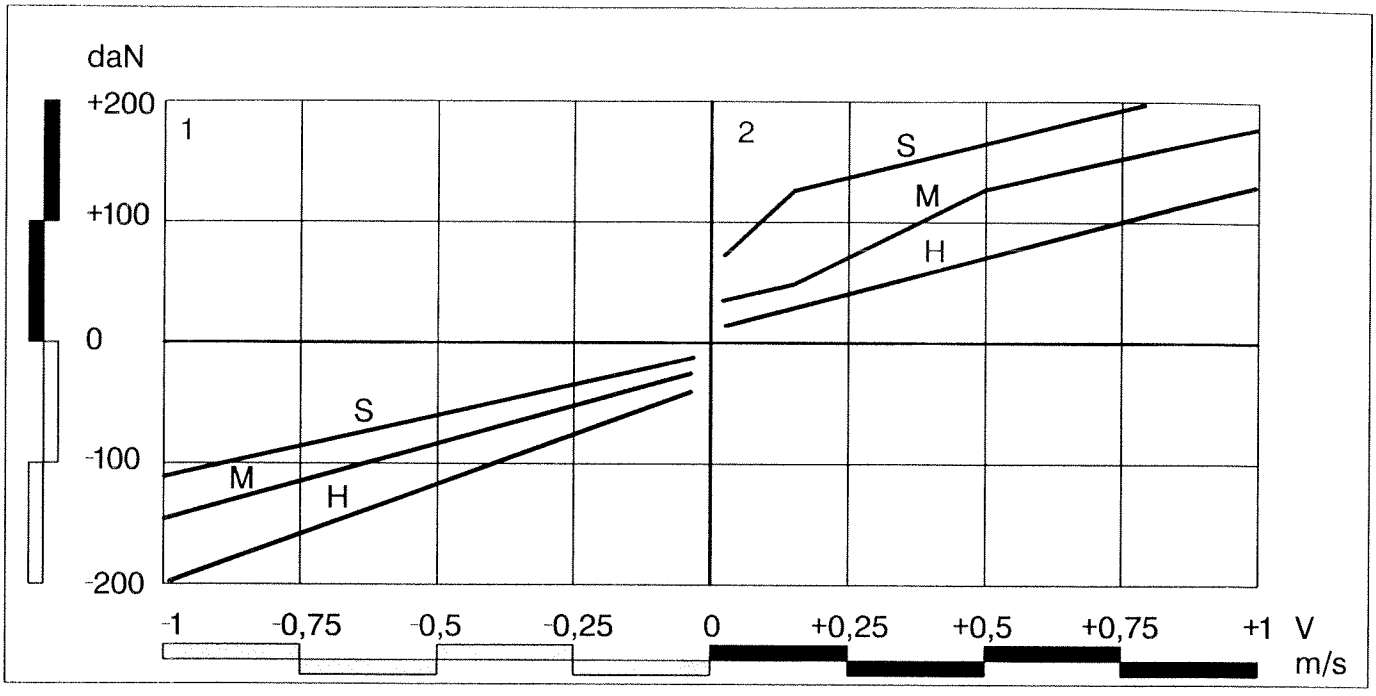

Front shock absorber
Graph showing damping in accordance with stem speed
1. Compression
2. Extension

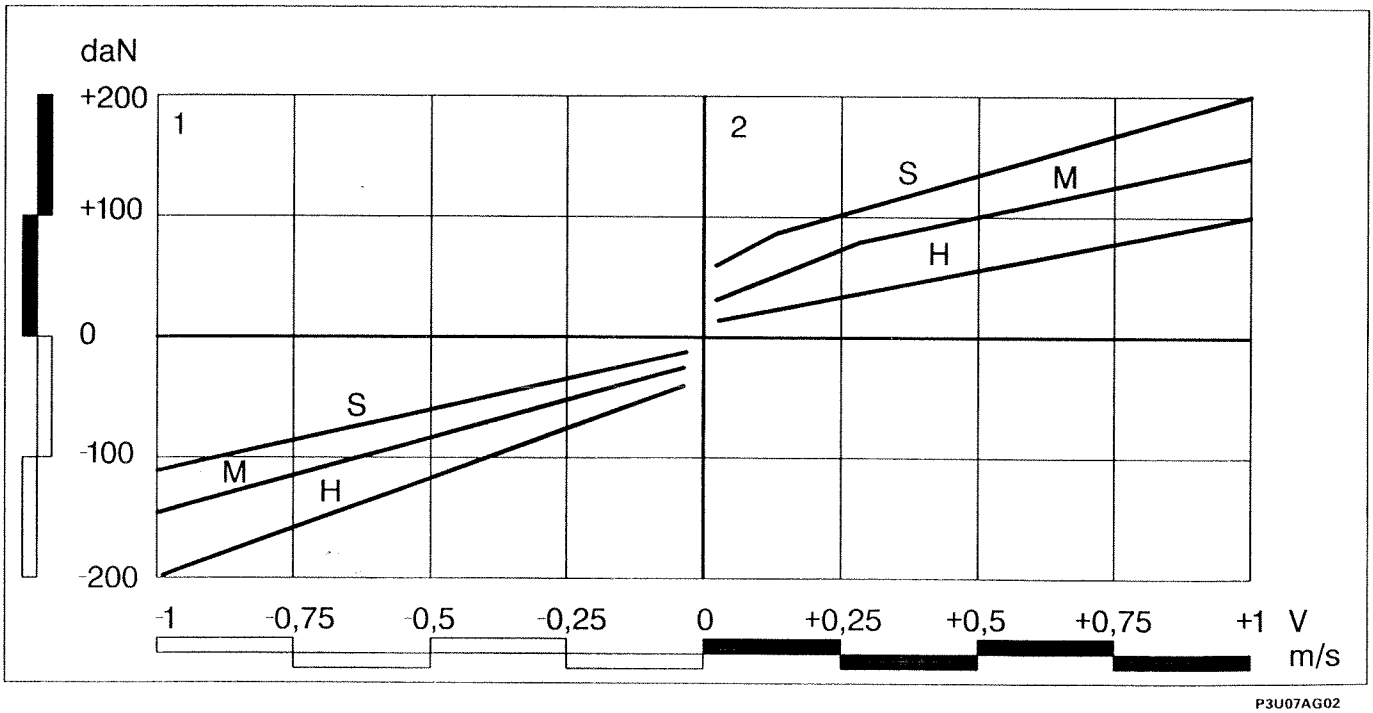

Rear shock absorber
Graph showing damping in accordance with stem speed
1. Compression
2. Extension

Copyright Fiat Auto

44.

DIAGRAM OF INPUT/OUTPUT INFORMATION BETWEEN CONTROL UNIT AND SENSORS/ACTUATORS

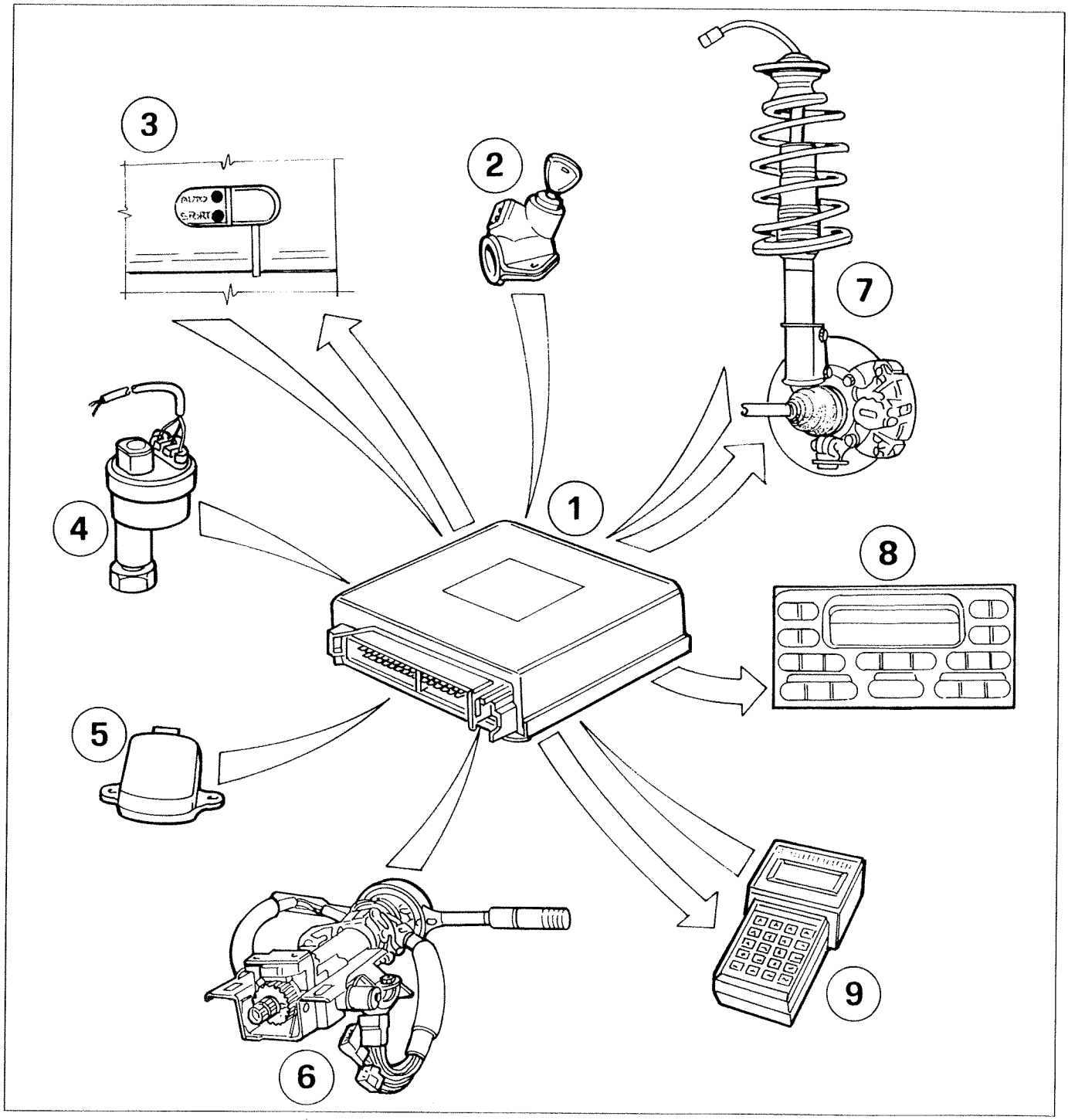

P3U08AG01

1. Damping control unit
2. Control unit supply (from + 15)
3. Program selector switch and warning lights
4. Vehicle speed sensor
5. Vertical acceleration sensor
6. Optical steering sensor
7. Motor interceptors (incorporated in shock absorbers)
8. Infocenter (fault indicator)
9. F/L Tester

ELECTRONIC CONTROL UNIT (Magneti Marelli MCA 200)

The control unit has two connectors: one with 12 pins, the other with 18 pins.
It acts on the system's actuators via its output interfaces in accordance with the state of the sensors connected to it.
The control unit has a data acquisition and coding circuit (1) and (2); a microprocessor (3) for managing the data and a set of memories (4) containing all the programs required for managing the system; drivers (5) and (6) for controlling the actuators and finally a diagnostic socket (7) for connection of the F/L Tester.

NOTE *The control unit must be supplied with a voltage of between 10 and 18 V. In particular, if it is supplied with voltages below 10 V for some time (ignition on with battery partially discharged), it sends a system fault signal, even if there are no faults.*
This signal must be deleted from the error memory by means of the F/L Tester.

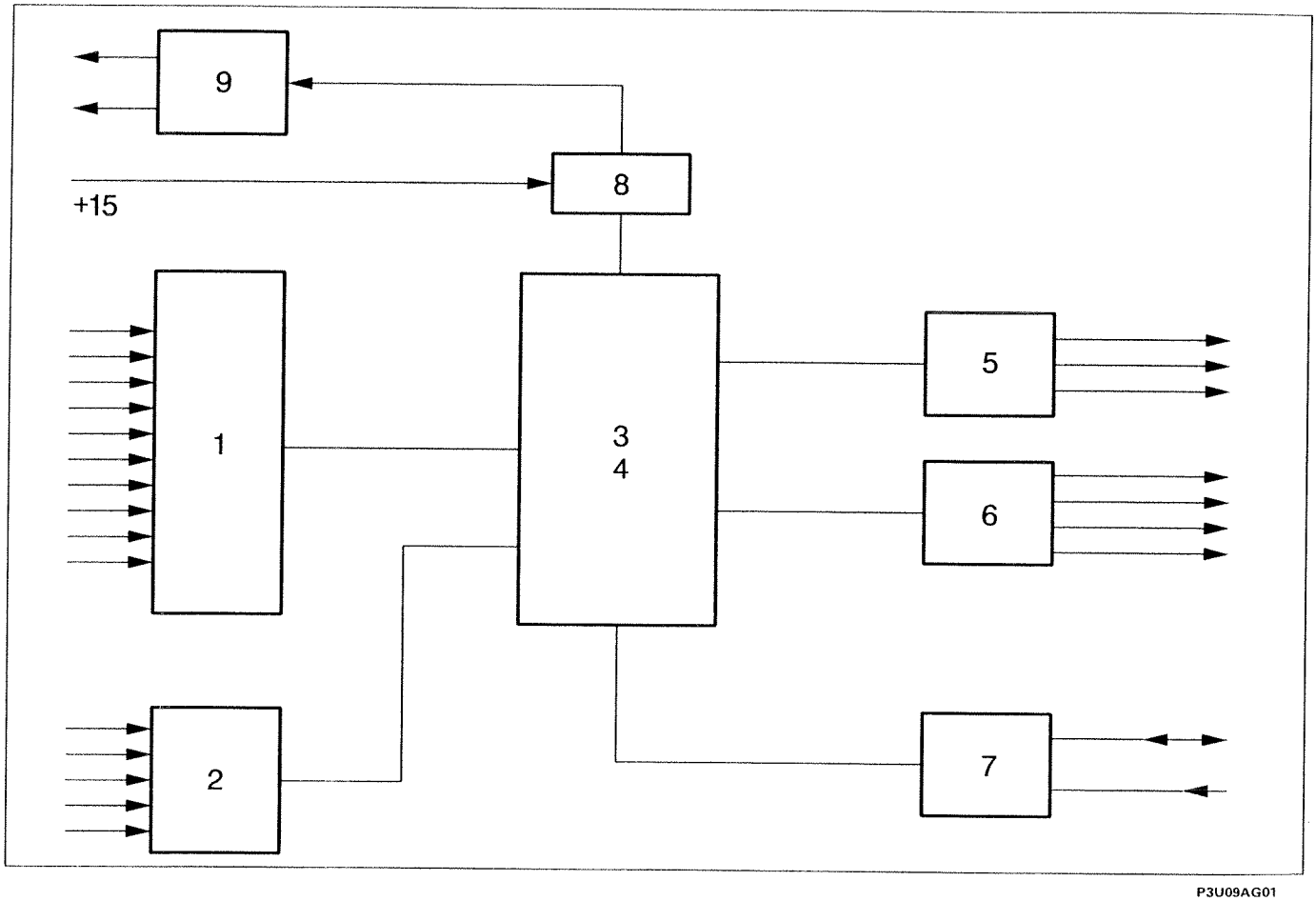

P3U09AG01

Block diagram of damping control unit

1. Digital inputs (vehicle speed, steering, motor interceptor positions, program selector switch)
2. Analogue inputs (acceleration, battery)
3. Microprocessor
4. Memories
5. Signal driver (warning lights)
6. Power driver (motor interceptors)
7. F/L Tester driver
8. Control unit internal supply (5 V)
9. Sensor supply (steering, acceleration)

Copyright Fiat Auto

44.

CONTROL UNIT OUT-PIN CONNECTORS

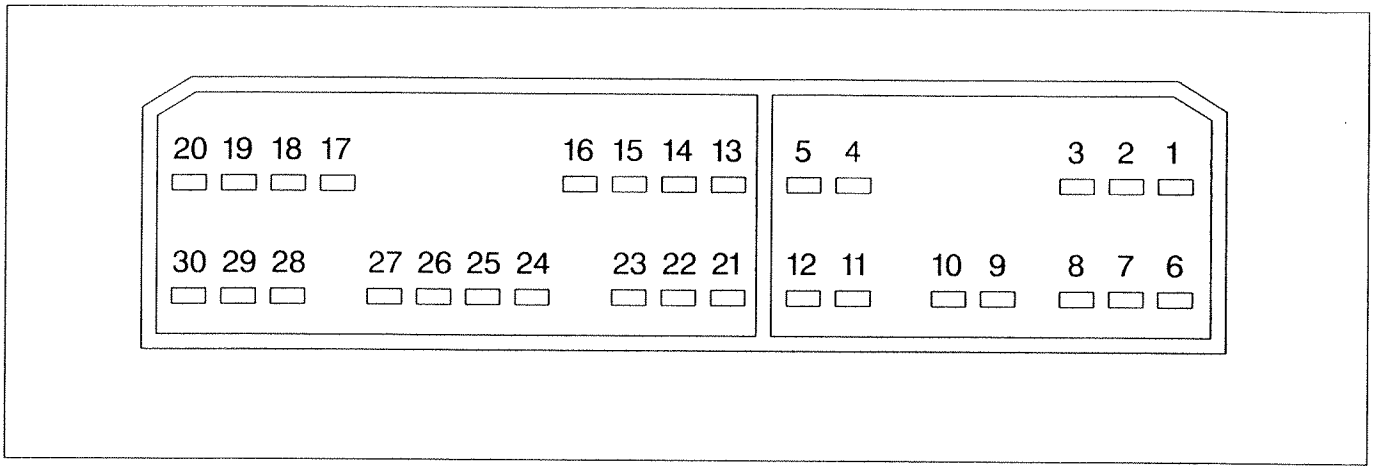

P3U10AG01

1. Control unit supply (from +15)
2. "AUTO" "SPORT" program selector switch
3. STR1 Optical steering sensor signal
4. B1 F.L. motor interceptor position indicator
5. A3 R.L. motor interceptor position indicator
6. N.C.
7. STR2 Optical steering sensor signal
8. Vehicle speed signal
9. A2 F.R. motor interceptor position indicator
10. B2 F.R. motor interceptor position indicator
11. A1 F.L. motor interceptor position indicator
12. B3 R.L. motor interceptor position indicator
13. A4 R.R. motor interceptor position indicator
14. Optical steering sensor supply (+5 Volt)
15. ACC. Vertical accelerometer signal
16. STRZ Optical steering sensor signal
17. Serial line K for F/L Tester (bidirectional)
18. MOT4 R.R. motor interceptor control
19. Serial line L for F/L Tester
20. System fault signal
21. Vertical acceleration sensor earth
22. B4 R.R. motor interceptor position indicator
23. Vertical acceleration sensor supply (+5 Volt)
24. MOT1 F.L. motor interceptor control
25. MOT2 F.R. motor interceptor control
26. MOT3 R.L. motor interceptor control
27. Control unit earth
28. Optical steering sensor earth
29. "SPORT" warning light
30. "AUTO" warning light

MANAGEMENT OF SETTINGS

When all the sensors are working, the wiring is efficient, the programme selector is on "AUTO" and the green light is on, the control unit drives the four motor interceptors and sets the "HARD", "MEDIUM" or "SOFT" settings in accordance with the following parameters:
- vehicle speed (measured by the relevant sensor);
- vehicle's longitudinal acceleration/deceleration;
- variation of the vehicle's acceleration/deceleration over a period of time;
- vehicle's vertical acceleration (measured by the relevant sensor and filtered in accordance with the wheels' frequency and the body shell's frequency);
- steering wheel angle (measured by the relevant sensor);
- steering wheel's speed of rotation;

Operation in "SPORT" mode

This function maintains the suspension's "HARD" setting to give the car an almost "racy" performance throughout its speed range.

Operation in "AUTO" mode

In automatic, the control unit selects a "basic" damping level in accordance with the vehicle's speed, and also selects a damping level for each parameter implemented, and then uses the stiffest of all the settings identified.
In general, the system changes over from the setting selected in accordance with the speed to a stiffer setting under the following conditions:
- sudden changes in direction because of obstacles on the road or right bends;
- bumps and roughness on the road which cause excessive oscillation of the body shell and/or wheels;
- sudden acceleration or braking (calculated by the control unit in accordance with the variation in the vehicle's speed sensor over a period of time).

1. Vehicle speed

This parameter sets the same damping level for both axles of the vehicle. This damping depends on the four speed thresholds.

a) From 0 to 4 km/h "HARD" condition

At speeds of under 4 km/h, the system is always on the "HARD" setting, as the electronic control unit does not receive a clear signal from the speedometer sensor, because of the low frequency, and so sets itself to a safe condition, ensuring the highest damping.

b) From 4 to 6 km/h "MEDIUM" condition

In this speed range, the control unit drives the motor interceptors, selecting a transitional "MEDIUM" damping, to improve driving comfort.

c) From 6 to 135 km/h "SOFT" condition

Only in this speed range does the control unit select soft damping, in order to obtain the best possible driving comfort.

Copyright Fiat Auto

NOTE *The stiffest damping selection always prevails if the parameter of one of the other sensors helps to increase it. In this way, the control unit's programme always ensures safe driving.*

d) From 135 to 170 km/h "MEDIUM" condition

In this speed range, a medium damping setting is implemented to obtain the best safety - comfort compromise.

e) Over 170 km/h "HARD" condition

The high speed involves a stiff setting.

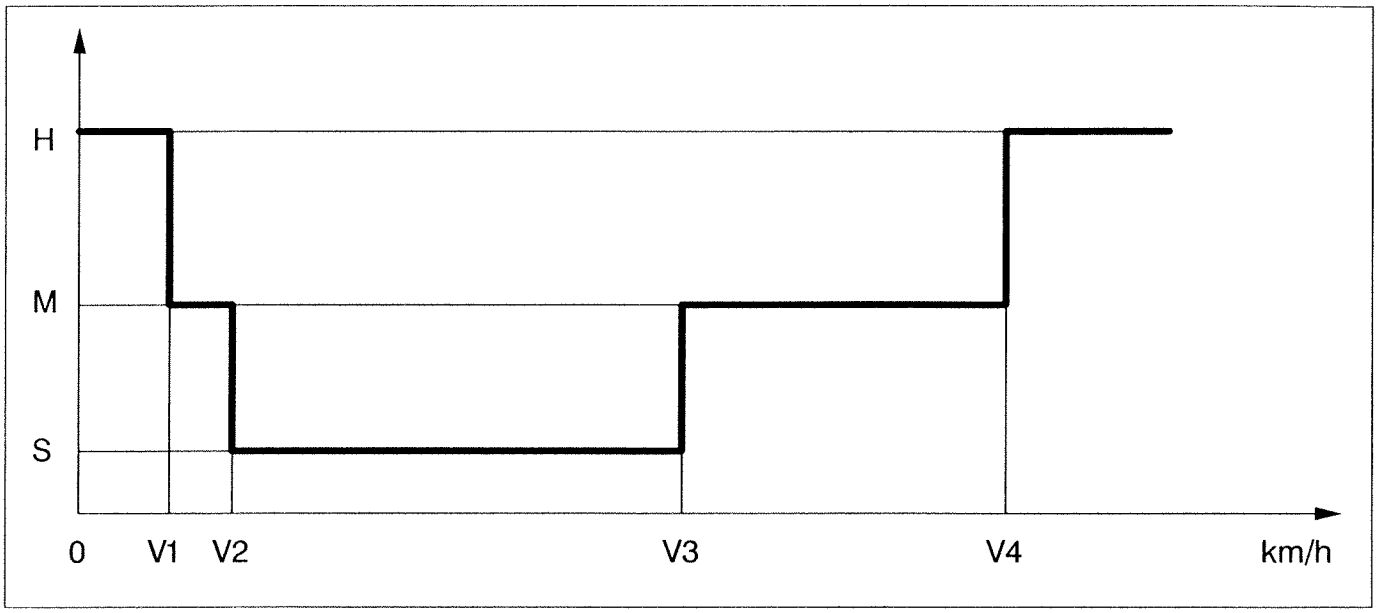

v_1 = 4 km/h v_2 = 6 km/h v_3 = 135 km/h v_4 = 170 km/h

Graph of trend of settings in accordance with vehicle speed

2. Vehicle's longitudinal acceleration/deceleration and relevant variation over time

This parameter may set different damping levels for the vehicle's two axles.
There are two acceleration and two deceleration thresholds for each axle, and for acceleration and deceleration variation, depending on the vehicle speed: one for the SOFT-MEDIUM transition and one for the MEDIUM-HARD transition.
The previous level is resumed with some delay after the previous conditions have been restored.

3. Steering wheel angular rotation

This parameter can set different damping levels for the vehicle's two axles.
For each axle, there are two thresholds for the steering wheel's angular rotation, dependent on the vehicle speed: one for the SOFT-MEDIUM transition and one for the MEDIUM-HARD transition.
The previous level is resumed with some delay after the previous conditions have been restored.

4. Steering wheel angular rotation speed

This strategy can set different damping levels for the vehicle's two axles.
For each axle there are two thresholds of steering wheel angular rotation speed depending on the vehicle speed: one for the SOFT-MEDIUM transition and one for the MEDIUM-HARD transition.
The previous setting is restored with some delay after the previous conditions have been re-established.

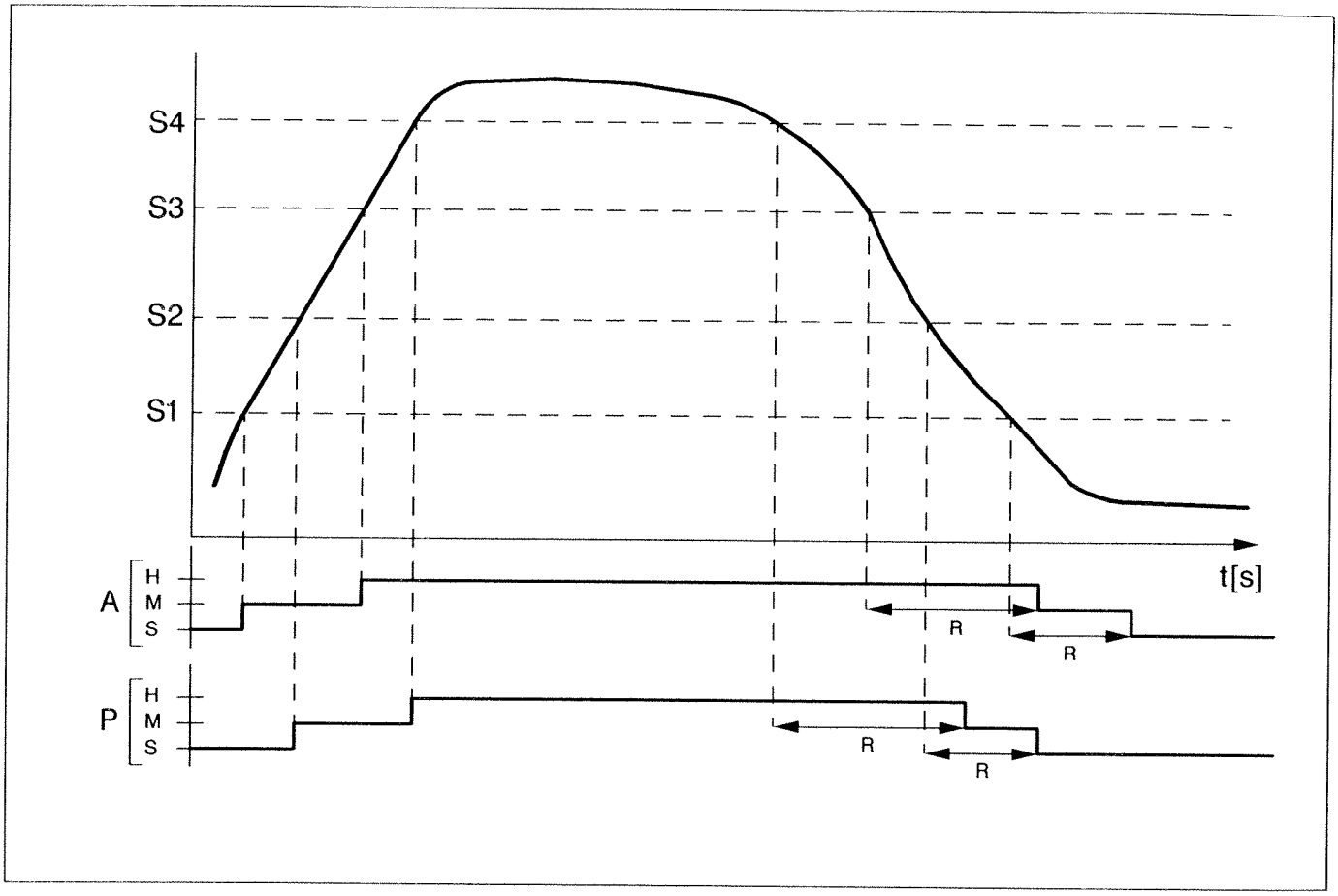

P3U13AG01

Graph of indicative trend of the different damping levels in accordance with the following signals:
2. vehicle longitudinal acceleration/deceleration and variation over time;
3. steering wheel angular rotation;
4. speed of steering wheel angular rotation.

A = front axle
P = rear axle
S1, S2, S3, S4 = intervention thresholds for the damping variation strategies
R = delays in implementation of the strategy

Copyright Fiat Auto

5. Vertical acceleration filtered at the body shell's frequency

This strategy sets the same damping level for the vehicle's two axles, but delays implementation on the rear axle for a certain period of time, depending on the speed.
There are two acceleration thresholds depending on the vehicle speed: one for the SOFT-MEDIUM transition and one for the MEDIUM-HARD transition.
The previous setting is restored with some delay after the previous conditions have been re-established.

6. Vertical acceleration filtered at the wheels' frequency

This strategy sets the same damping level for the vehicle's two axles, but delays implementation on the rear axle for a certain period of time, depending on the speed.
There are two acceleration thresholds depending on the vehicle speed: one for the SOFT-MEDIUM transition and one for the MEDIUM-HARD transition.
The previous setting is restored with some delay after the previous conditions have been re-established.

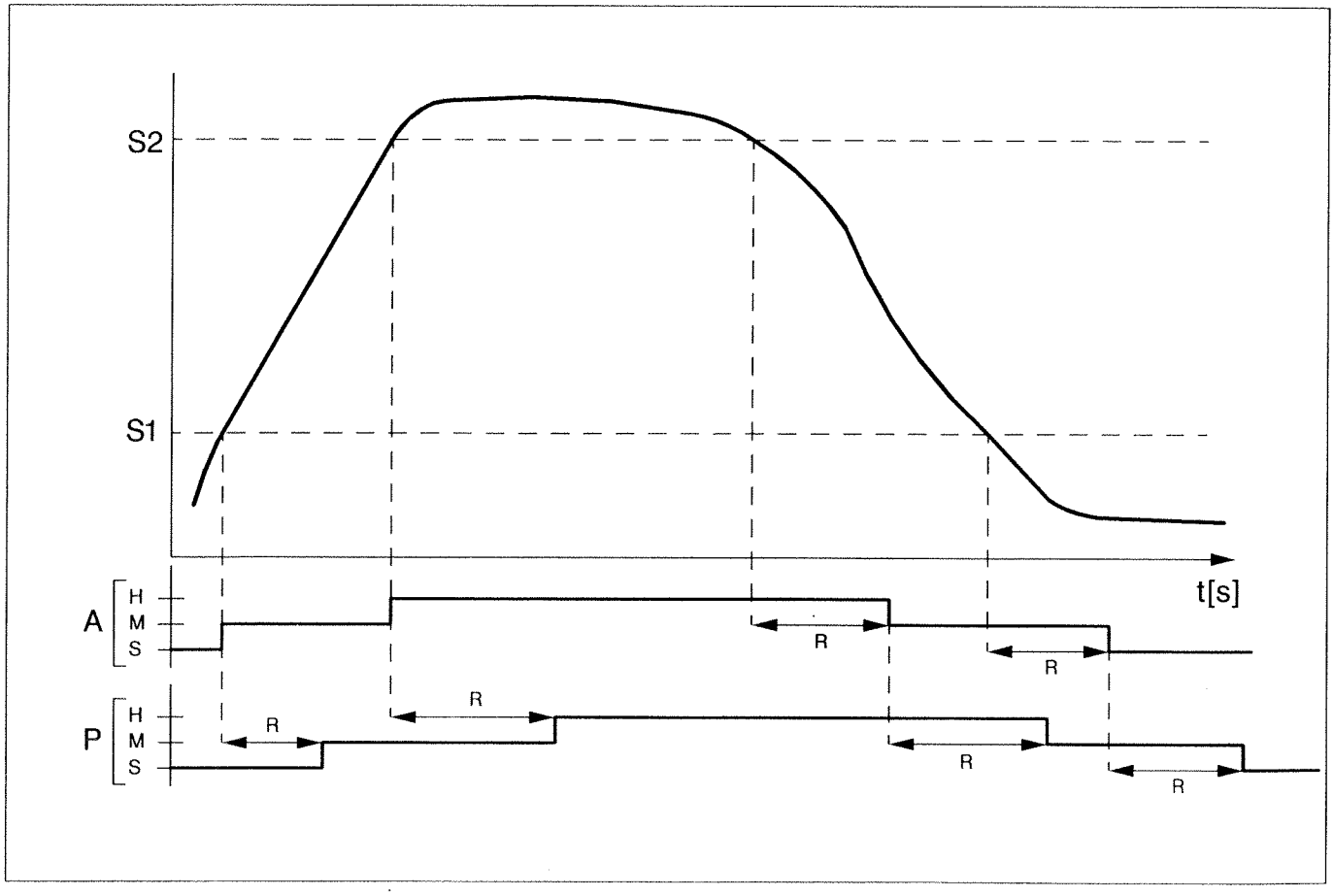

Graph of indicative trend of the different damping levels in accordance with the following signals:
5. vertical acceleration filtered at the body shell's frequency;
6. vertical frequency filtered at the wheels' own frequency.

A = Front axle
P = Rear axle
S1, S2 = Intervention thresholds for the damping variation strategies
R = Delays in implementation of the strategy

CALCULATING ANGULAR ROTATION OF STEERING WHEEL AND RELEVANT SPEED

The control unit recognizes when the car is driving in a straight line when the three signals STRZ, STR1 and STR2 are at zero level, and the direction and extent of the rotation in accordance with the order in which it receives signals from the photodiodes.
Immediately after each change in voltage (rising or falling edge) coming from the two sensors STR1 and STR2 (caused by rotation of the steering wheel), the control unit compares the value of the voltages supplied by the same sensors.
In relation to a generic steering wheel position previously stored in memory, the control unit:

a) recognizes a right-hand rotation if:
   after the edge on STR1, STR1 and STR2 the voltages are the same, or
   after the edge on STR2, STR1 and STR2 the voltages are different;
b) recognizes a left-hand rotation if:
   after the edge on STR1, STR1 and STR2 the voltages are different, or
   after the edge on STR2, STR1 and STR2 the voltages are the same.

Each time a rotation is recognized, the steering wheel's angular position previously memorized is updated.

NOTE *This updating takes place in steps of 4.5° at a time*

The speed of rotation is determined by the ratio between the value of the variation in angle and the time elapsing between two successive edges.

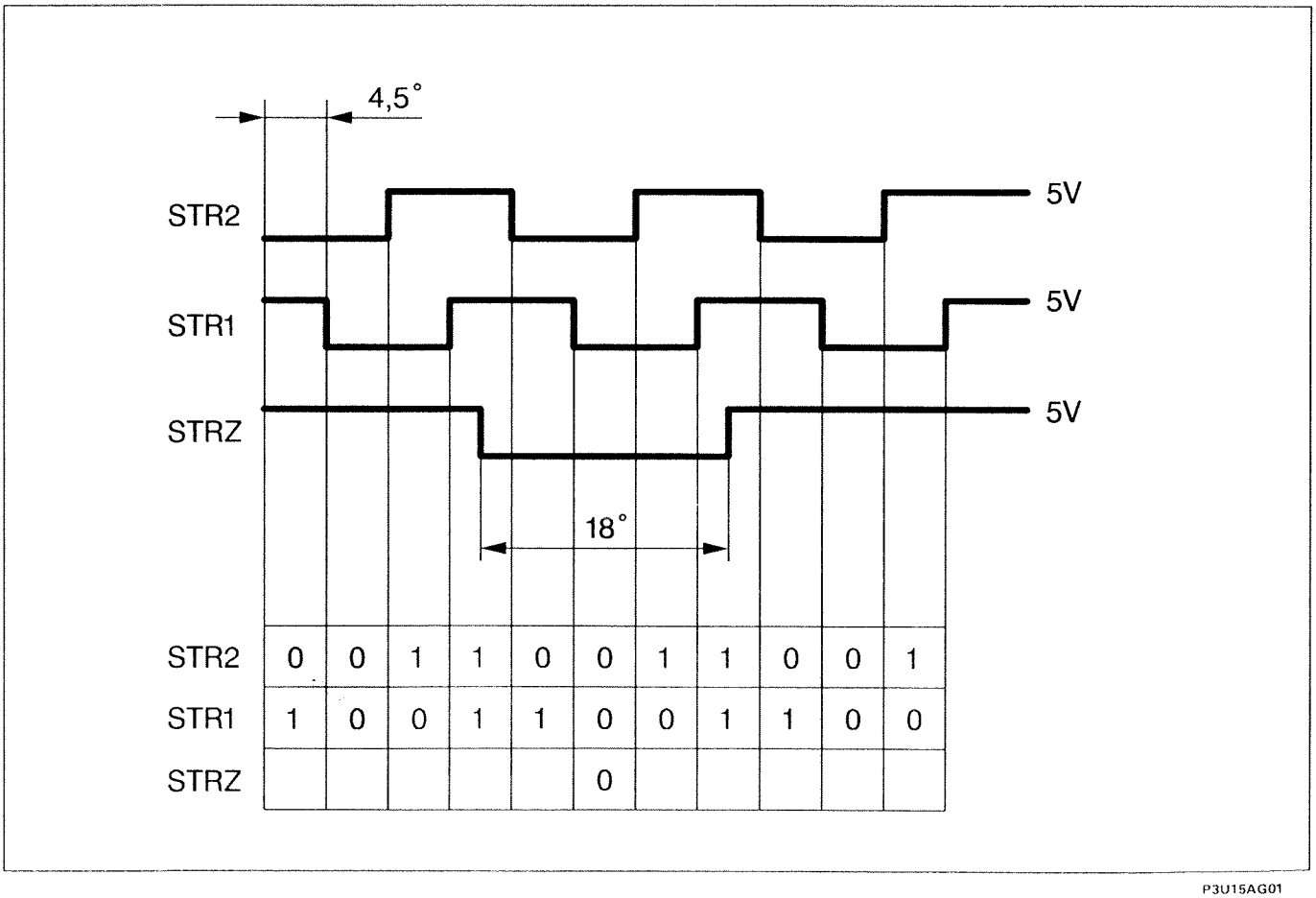

Graph of the output signals of the optical steering sensor

SELF-ADAPTATION TO STEERING WHEEL ZERO POSITION

The control unit can correct imprecisions in the steering wheel's centred position by means of a specific self--adaptation function.
The strategy can be briefly described as follows:
When the control unit is supplied by the ignition switch, the function in not enabled, as the steering wheel may be in any position.
The function is activated when the three signals STRZ, STR1 and STR2 are ready simultaneously at zero level at a vehicle speed of over 50 km/h: in this way you are sure that the steering wheel has not rotated 360° in relation to the straight-line driving position.

NOTE *If, because of great imprecision, the condition described above does not occur within a period exceeding 30 minutes (sum of partial times) of travel at over 50 km/h, the threshold is reduced to 30 km/h and is kept at that level even during subsequent start-ups.*

Once activated, the function proceeds with the first stage of calculation of the deviation of the angle from the memorized zero, only when the vehicle remains at speeds of over 120 km/h for a period exceeding 3 minutes. In this stage, there is a deviation of about 90% of the actual deviation that may be present. The deviation thus calculated is taken into account if its value exceeds 3°. It may naturally be positive or negative, and is

added to the angle read at each instant, thus causing partial recentring of the sensor's reading.
After this stage is completed, the function proceeds with the second stage of calculation of the angle's deviation which is only activated when the vehicle remains at speeds of over 120 km/h for a period of over 20 minutes. The deviation thus calculated is taken into consideration if its value exceeds 1°. In this stage, the value of the deviation calculated during the first stage is corrected precisely, in order to ensure very precise recentring.

CALCULATION OF VEHICLE SPEED

The sensor sends to the instrument panel, and from here to the control unit, a signal consisting of four pulses every rotor revolution. The calculation is carried out in accordance with two different methods.

Method A (vehicle speed up to 72 km/h accelerating and below 68.6 km/h decelerating).
The speed is calculated in accordance with the time taken by the rotor to accomplish one revolution, and is updated at every pulse.

Method B (vehicle speed over 72 km/h acceleratiing and down to 68.6 km/h decelerating).
The speed is calculated in accordance with the time taken by the rotor to accomplish two revolutions, and is updated every two pulses.

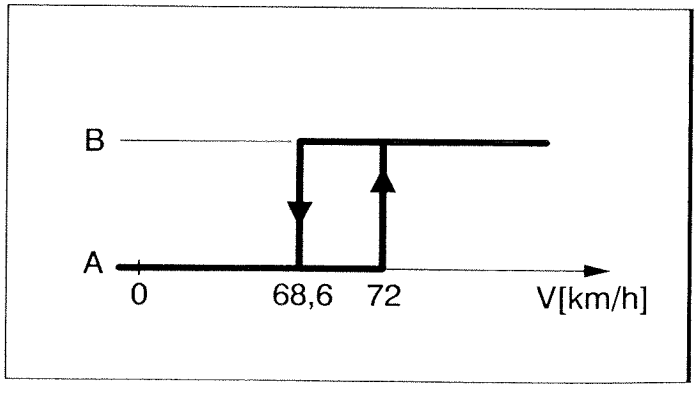

P3U16AG01

Graph of methods of calculating vehicle speed

FAULT DIAGNOSIS

The system comprises a self-test which ascertains any faults in the following components:

sensors
- vertical acceleration sensor;
- vehicle speed sensor;
- steering visual sensor;
- motor interceptor position switch;
- battery voltage;

actuators
- motor interceptors;
- warning lights.

If the fault detected is validated, the control unit excludes the relevant signal and activates the recovery function. In addition, the control unit sends the fault signal, which causes a message to be displayed on the Infocenter.

The F/L Tester may be used to carry out a fully diagnosis of the system, which comprises three stages:
1. display of a set of operating parameters;
2. display of any errors that may be present, and their deletion;
3. activation of the actuators (active diagnosis).

The latter possibility is inhibited at vehicle speeds of over 30 km/h.

NOTE *The ignition must be switched off before any work is carried out on the components of the system or components affected by it (suspension and steering).*
The ignition may only be switched on after the work has been completed, and in particular after all the electrical connectors have been connected.
If not, the control unit memorizes a fault present situation, which can be cancelled by deleting errors from memory using the F/L Tester.

1. Parameters displayed

The following parameters can be displayed:
- vertical acceleration;
- vehicle speed;
- steering angle;
- battery voltage;
- status of motor interceptor position switch;
- status of motor interceptor control.

Copyright Fiat Auto

2. Fault detection and deletion

Fault detection
This takes place during the basic functions with which each sensor/actuator is managed.

Memorization of the error and structure of the error memory
The errors are memorized in the control unit in the order in which they occur.
The control unit can memorize up to eight errors; if another error occurs, the first error will be lost, and so forth.

For each error, the following are memorized:
a) the error code, consisting of three elements:
   - component code;
   - error type code;
   - error state code;
b) error counter;
c) peak counter;
d) two environmental conditions, specific for each type of fault, detected at the time of the fault.

In particular, the error state can assume different meanings:
- error present: error detected at the present moment;
- error not present: error which has been detected, but is not detected at the current moment;
- filtered error: error temporarily masked, while awaiting possible repetitions, as it has been detected in a manner such as to cast doubt on its actual existence;
- validated error: error detected by methods such as to consider it really present.

The error state code is represented by the following table:

0 0 0	filtered error not present
0 0 1	filtered error present
0 1 0	validated error not present
0 1 1	validated error present.

Methods of classifying the fault
The methods of classifying a fault vary in accordance with the type of fault and the sensor/actuator involved.
In general, after the first recognition, a fault is classified as validated after it has reoccurred in accordance with methods and times depending on the type of fault and the sensor/actuator involved.
The classification of a fault as validated involves sending the fault indication and activating the recovery strategies, and also the error and peak counters.

Error and peak counters
The presence of a validated error brings the error counter to 64 and the peak counter to 1. These values are updated whenever the control unit is supplied (ignition on) as follows:
- if the error is detected again, both the error and peak counters are incremented by 1;
- if the error is not detected, the error counter is decremented by 1. If this counter has reached high values (over 64), it is set to 63. The peak counter is not changed.

If the counter reaches zero because of successive decrements, the error is deleted from memory and the peak counter is reset to zero.

Error deletion
The error can be deleted:
- when the error counter reaches zero;
- by a procedure with the F/L Tester.

Fault indication
The system fault indication is sent if at least one error is validated, and remains until the error has been eliminated.
This includes the display of a message on the Infocenter display.

3. Activation of the actuators (active diagnosis)

The following actuators can be activated by a F/L Tester command:
- F.R., F.L., R.R., R.L. motor interceptor;
- AUTO warning light;
- SPORT warning light.

RECOVERY

If there is a validated error, the control unit behaves as follows:

Vertical acceleration sensor:
the relevant strategies are excluded.

NOTE *If there is a fault, the fault indication is not sent; this fault can therefore only be detected by reading the error memory with the F/L Tester.*

Battery voltage:
the HARD setting is selected.

Optical steering sensor:
the HARD setting is selected.

Vehicle speed sensor:
the HARD setting is selected.

Motor interceptors:
the HARD setting is selected, if possible; if it is jammed, the faulty motor interceptor will not move again.

Motor interceptor position switches:
the HARD setting is selected on the motor interceptors which are not faulty.

Copyright Fiat Auto

44.

OPTICAL STEERING SENSOR

This sensor informs the control unit of the steering wheel's angular position and the speed with which this position is reached.
The optical steering sensor comprises a phonic wheel (1) fixed on the upper steering column (3) and the sensor (2) attached to the mounting (4).

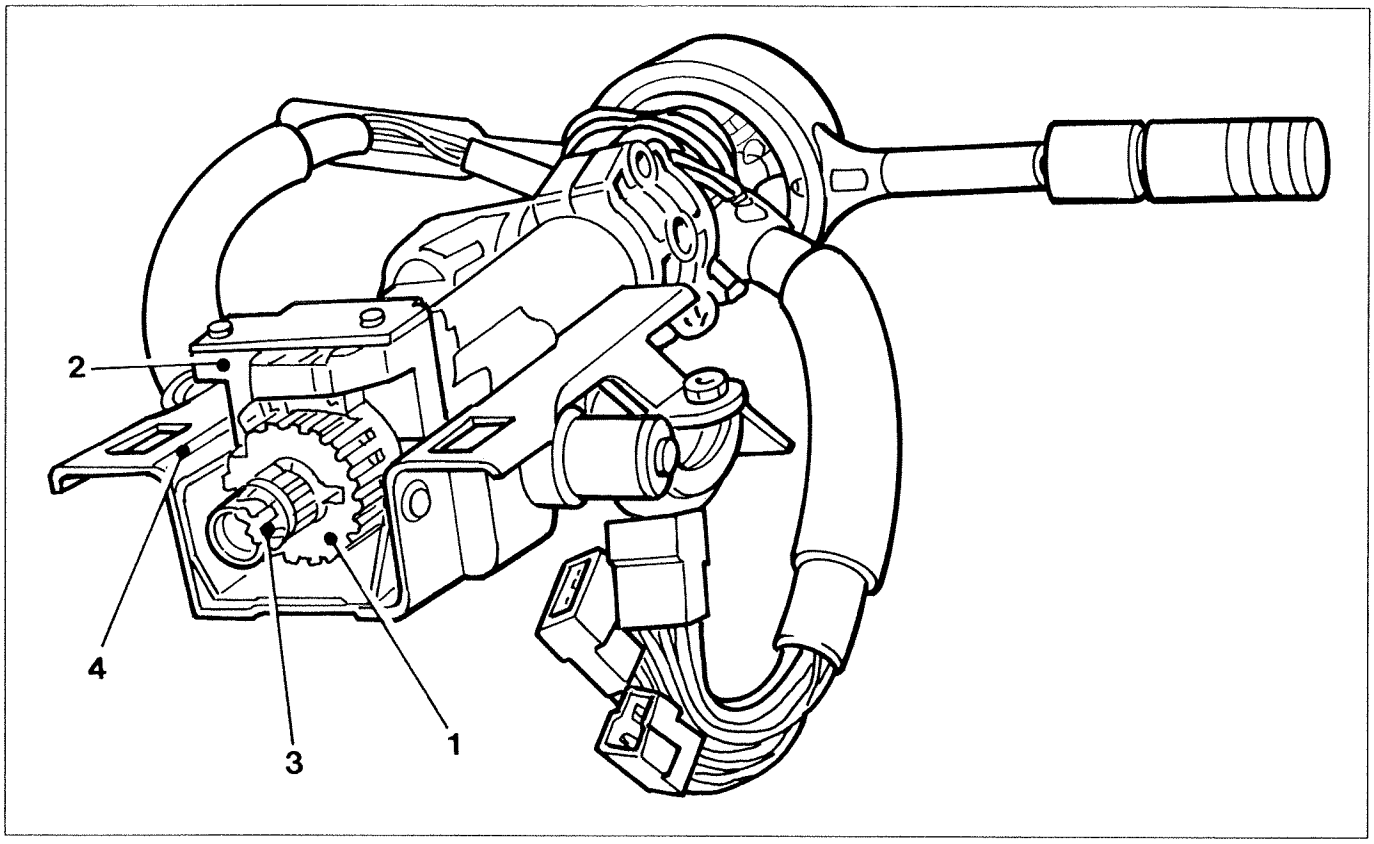

P3U20AG01

1. Phonic wheel
2. Optical steering sensor
3. Upper steering column
4. Mounting

The sensor (2) consists of three LEDs (A, B and C) facing 3 receiving photodiodes (STRZ, STR2, STR1); the LEDs and photodiodes are located on two concentric circumferences on the inside and outside respectively of the phonic wheel (1).
As the steering wheel rotates, the phonic wheel, consisting of solids and empty spaces, intercepts the light beams emitted by the LEDs towards the photodiodes.
When the photodiodes are lit up, they become conductive and reduce the voltage level to pins 16, 7 and 3 of the control unit, while when they are not lit up they interrupt the earth connection, bringing the voltage level to 5 Volt on pin 16, 7 and 3 of the control unit.
The control unit recognizes the condition of driving in a straight line by means of the photodiode STRZ, and subsequently the angles of rotation in accordance with the order in which it receives signals from the other photodiodes.

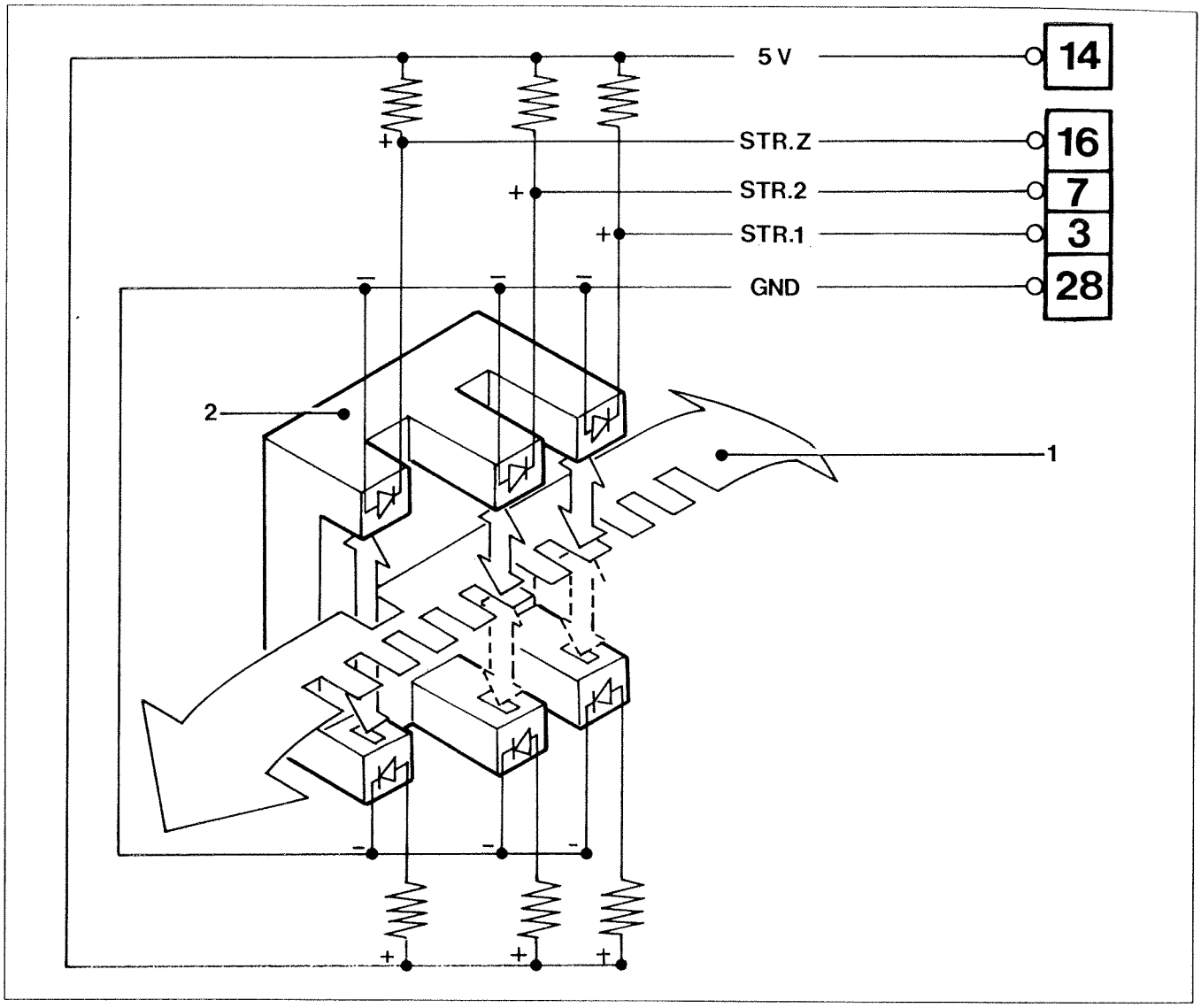

P3U21AG01

Functional diagram of optical steering sensor

1. Phonic wheel
2. Sensor

A, B, C,: LEDs
STR1, STR2, STRZ: photodiodes

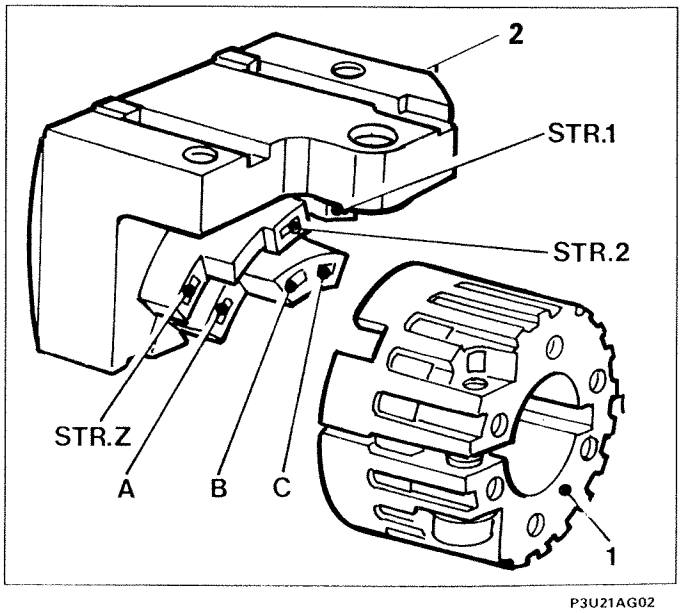

P3U21AG02

Copyright Fiat Auto

44.

MOTOR INTERCEPTORS

The actuator consists of a one-way DC motor and a hydraulic distributor.

Hydraulic operation

A hydraulic distributor isf fitted on the rotor shaft, which intercepts the two channels which place the shock absorber's central chamber in communication with the upper recovery chamber, obtaining different damping levels (HARD - MEDIUM - SOFT).
The principle of operation is the same as on a traditional shock absorber in both the extension phase and the compression phase.

SOFT condition (figure on next page, detail I).
In this condition the motor interceptor (1) uncovers the oil passages (B and C) so that some of the oil passes into the channel (A) and some into the channels (B and C), greatly facilitating the communication between the central chamber (2) and the upper recovery chamber (3).
In this condition, the damping is "SOFT".

MEDIUM condition (detail II).
In this condition the motor interceptor (1) rotates by 90° (in relation to condition I described above) and uncovers only the oil passage (B) so that some of the oil goes into channel (A) and some into channel (B), making the communication between the central chamber (2) and the upper recovery chamber (3) more difficult.
In this condition, the damping is "MEDIUM".

HARD condition (detail III).
In this condition, the motor interceptor (1) rotates by 90° (in relation to condition II described above) and closes the two oil passages (B) and (C) which it managers, opening communication between the central chamber (2) and the upper recovery chamber (3).
The system has been designed so that in this configuration, it provides greater damping action than an ordinary shock absorber, as the oil can only move from channel (A) by exceeding the calibrated pressure of the respective valves.

MEDIUM condition (detail IV).
In this condition, the motor interceptor (1) rotates by 90° (in relation to condition III described above): the condition described for detail II reoccurs.

NOTE *No repairs can be carried out on either the shock absorber or the motor interceptor. If a fault is ascertained, the assembly will have to be replaced.*

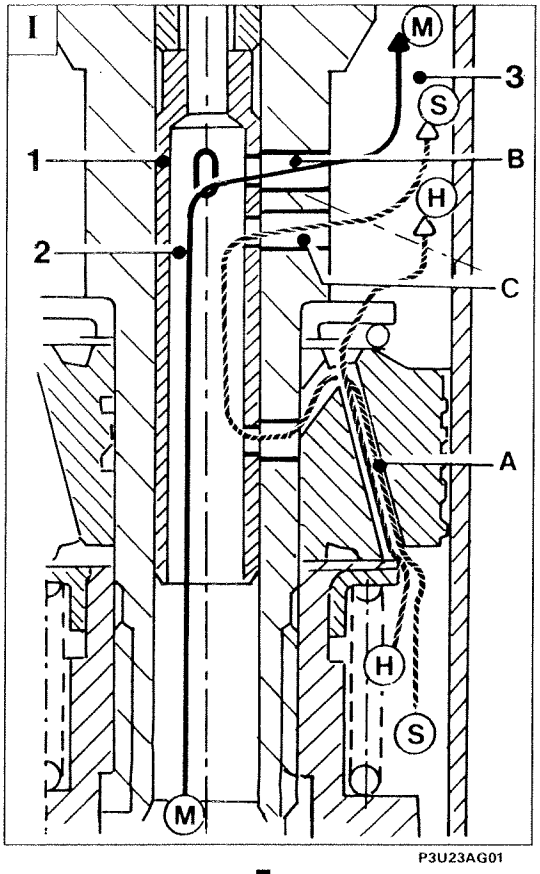

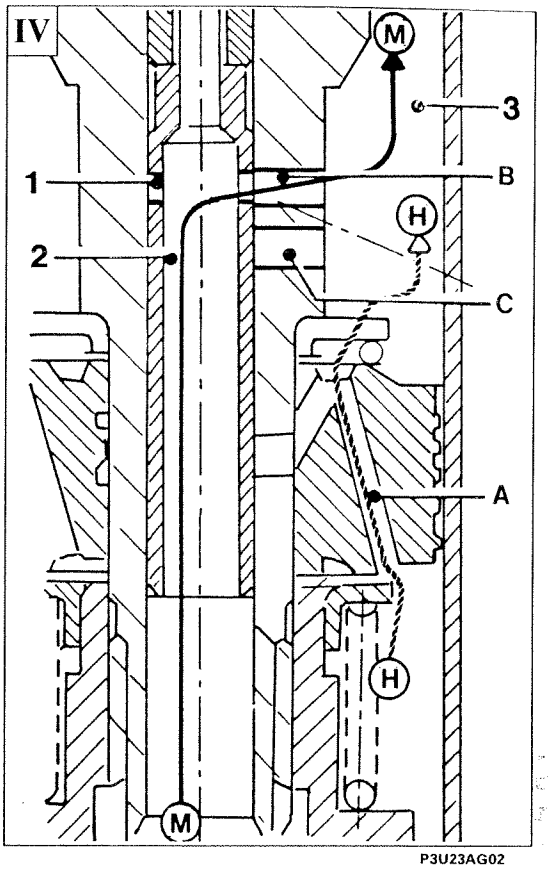

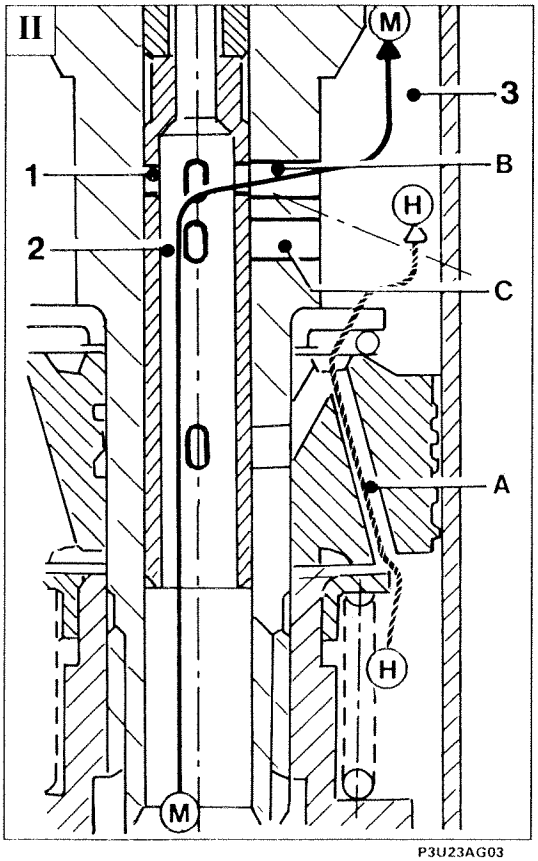

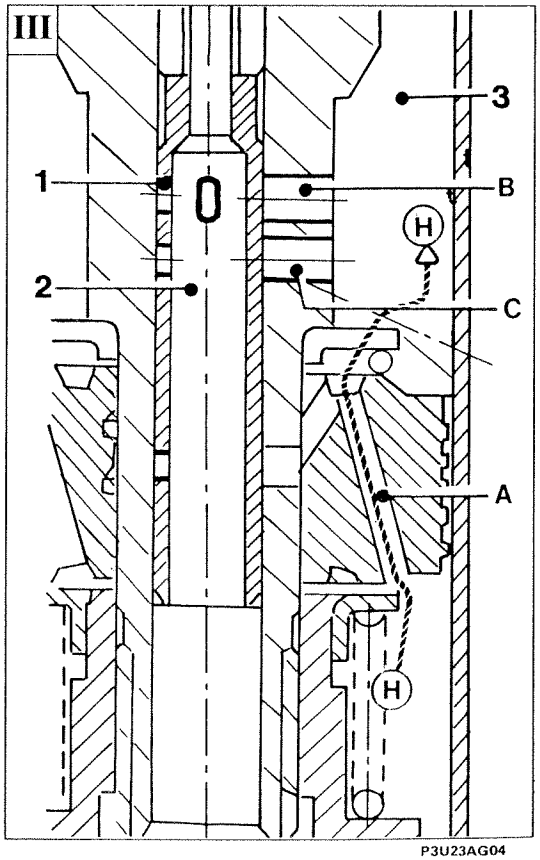

Position assumed by the motor interceptor in accordance with the setting to be achieved

Copyright Fiat Auto

44.

Electrical operation
The motor consists of a permanent magnet stator and a rotor with five windings.
The motor incorporates two microswitches which allow the control unit to recognize the rotor position from the closed/open status of the microswitches (figure A).
The motor specifications are as follows:

Winding resistance: 7.5 ohm at 20°C
Nominal voltage: 12 Volt

Absorbed currents (figure B)
Engagement current: 1.5 A
Maintenance current: 0.5 A

The sequence of recognition is given in the following table:

zone	rotation	microswitch A earthed condition	microswitch B earthed condition	setting
I	0° - 90	A — C	B — C	SOFT
II	90° - 180°	A — C	B — C	MEDIUM
III	180° - 270°	A — C	B — C	HARD
IV	270° - 360°	A — C	B — C	MEDIUM

As the voltage on pins A or B varies, the control unit stops the rotor so short-circuiting the winding, and recognizes the rotation of 90° and the exact position of the rotor (figure C).
In this way, the control unit controls the motor, stops the motor and recognizes the position corresponding to the type of damping selected (HARD - MEDIUM - SOFT).

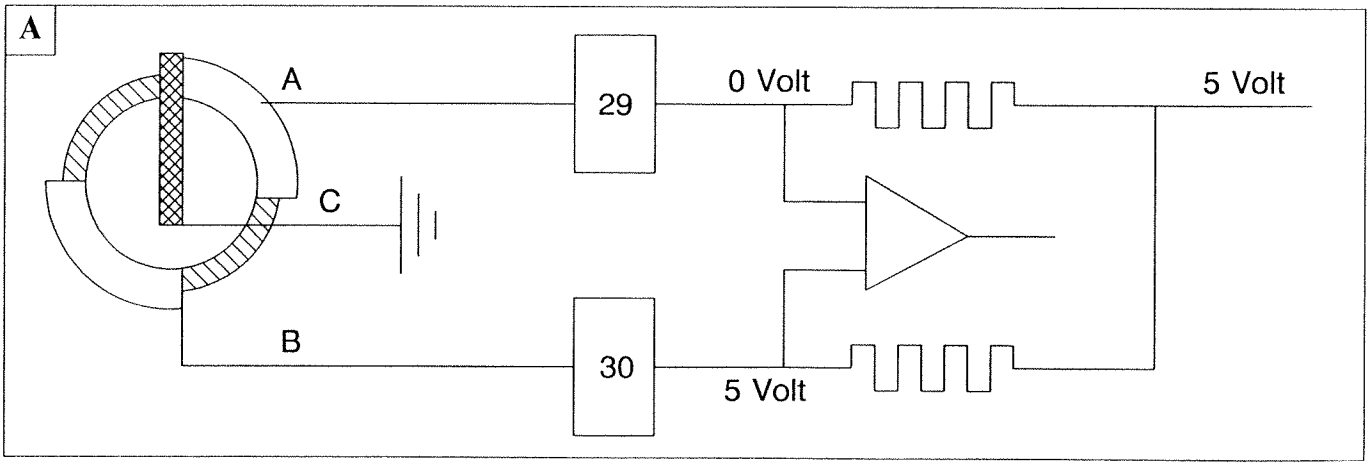

P3U24AG01

Circuit for recognition of motor interceptor angular position by control unit

NOTE *The figure shows in particular the front right motor interceptor.*

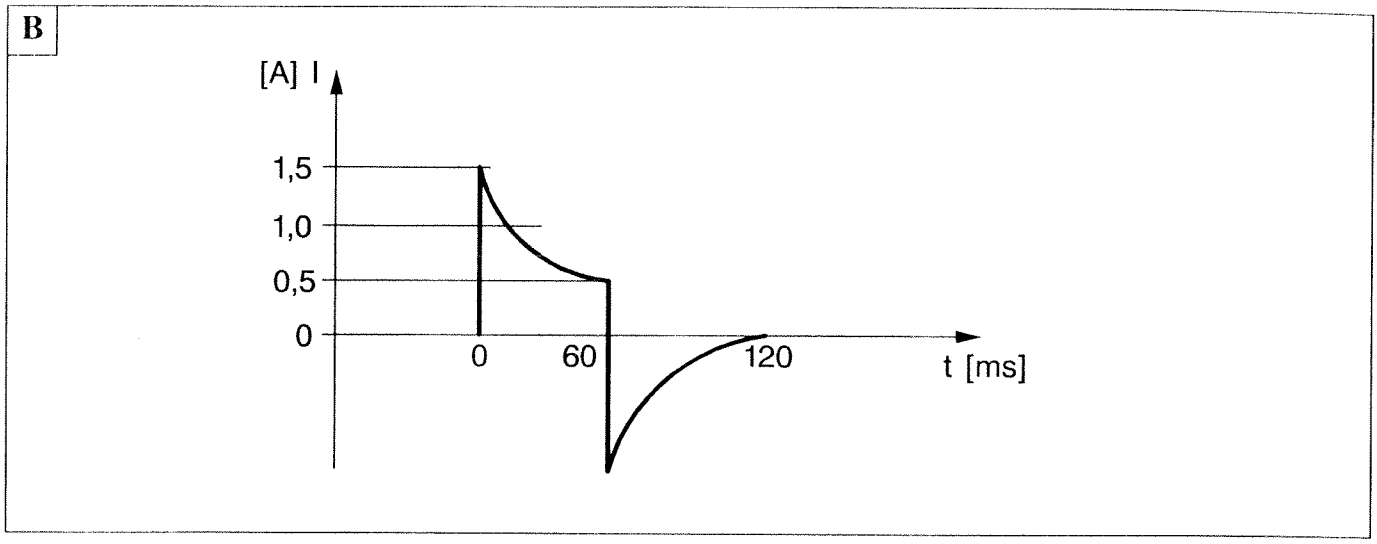

P3U25AG01

Graph of absorbed currents in accordance with the drive time

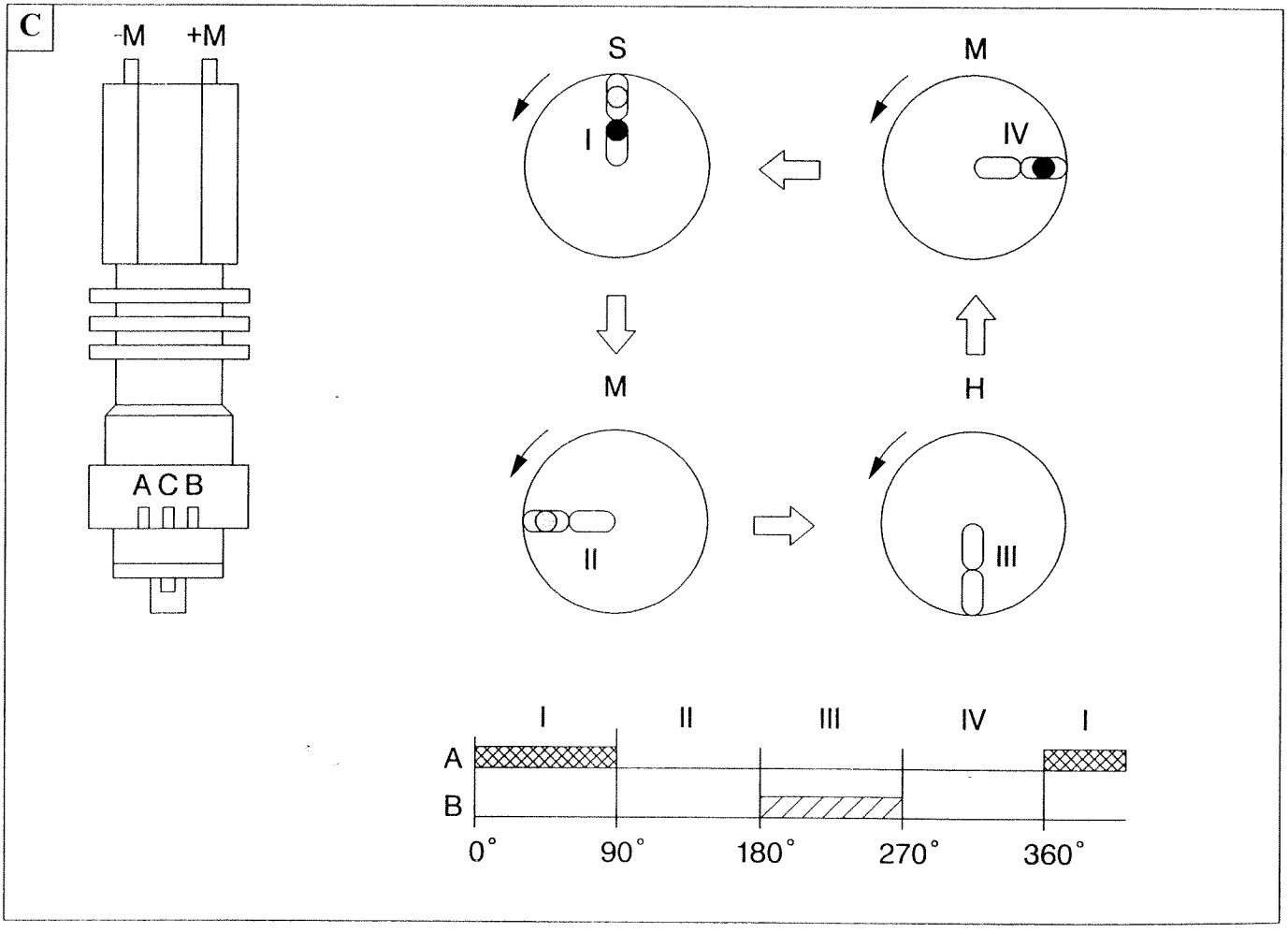

P3U25AG02

Schematic representation of the successive positions assumed by the motor interceptor and the corresponding settings obtained

PROGRAM SELECTOR SWITCH

The switch, located on the right under the instrument panel, is for selecting the "AUTO" or "SPORT" program.
With the circuit open, the control unit detects the voltage status on pin 2 and sets itself to "AUTO", while with the switch earthed, the control unit detects the voltage status 0 through pin 2 and actuates the "SPORT" strategy.
The switch positions are displayed by the relevant warning lights coming on.
The green "AUTO" warning light is supplied by the ignition key dependent + 15, and the circuit is earthed by the control unit through pin 30.
The yellow "SPORT" warning light is supplied by the ignition key dependent + 15, and the circuit is earthed by the control unit through pin 29.

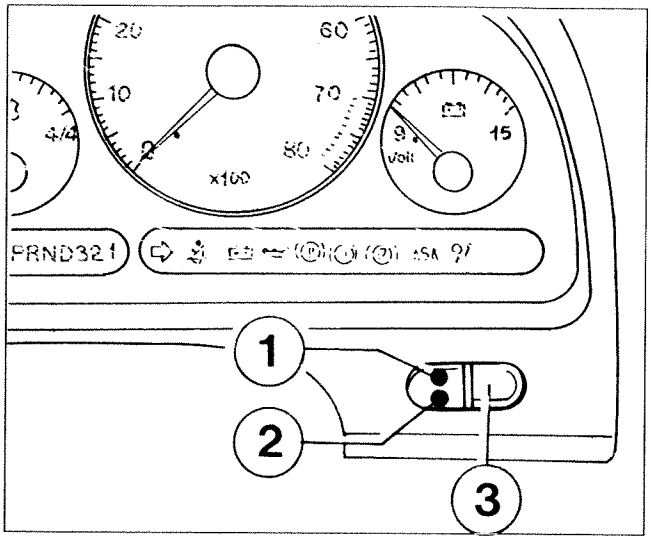

P3U26AG01

1. "AUTO" warning light
2. "SPORT" warning light
3. Switch

VERTICAL ACCELERATION SENSOR

The vertical acceleration sensor (SCA 11 VR) detects the changes in state which change the vehicle's vertical position.
The vertical acceleration sensor is supplied by a voltage of 5 Volt coming from pin 23 of the control unit, and the circuit is earthed through pin 21.
The voltage signal proportional to acceleration reaches the control unit through pin 15 and is linear.
The range of measurement of vertical acceleration varies from 0 g to + 2 g absolute (from -1 g to + 1 g relative), to which an output voltage signal of between 1 and 4 V corresponds.

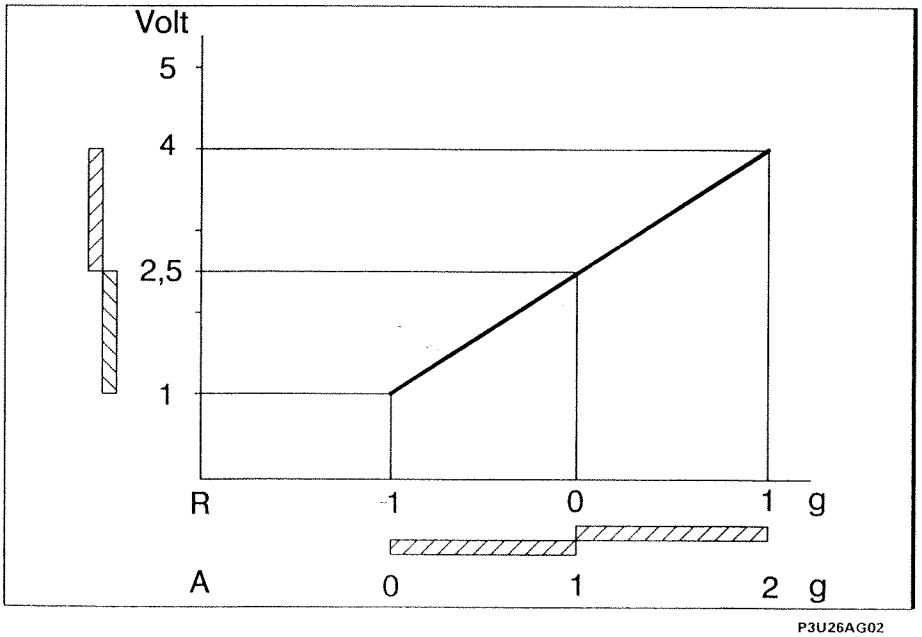

P3U26AG02

Graph showing voltage signal supplied by vertical acceleration sensor

The control unit filters the acceleration/deceleration values in accordance with the oscillation frequency of the bodywork (low frequency) and the oscillation frequency of the wheels (medium frequency).

The acceleration thresholds are selected by the electronic control unit depending on the vehicle's speed.

VEHICLE SPEED SENSOR

The speed signal coming from the vehicle speed sensor (via the instrument panel) is acquired by the control unit through pin 8.
The speed signal is processed and used by the control unit to determine:
- the vehicle speed;
- the vehicle's longitudinal acceleration and deceleration;
- the variations in the vehicle's longitudinal acceleration and deceleration.

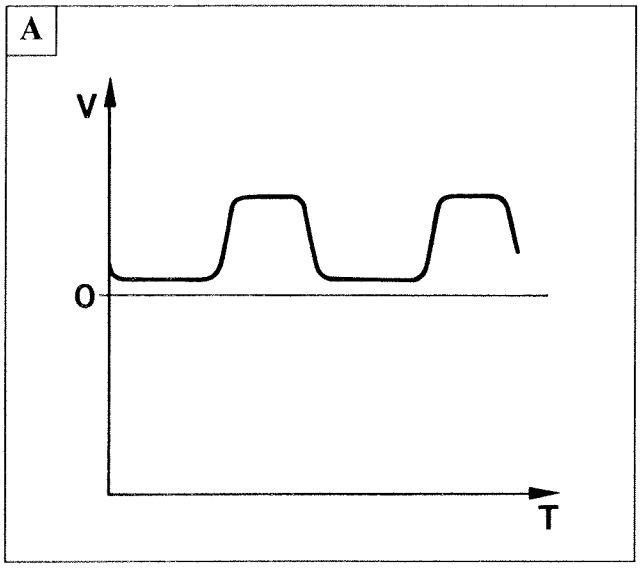

Signal from vehicle's speed sensor

The sensor is of the "HALL" effect type; its principle of operation is as follows:
A layer of semiconductor through which current passes, immersed in a magnetic field perpendicular to it (force lines perpendicular to the direction of the current), generates at its ends a difference in potential, known as Hall's voltage.
If the intensity of the current remains constant, the voltage generated depends solely on the intensity of the magnetic field. It is therefore sufficient for the field intensity to vary to obtain a modulated electrical signal (A).

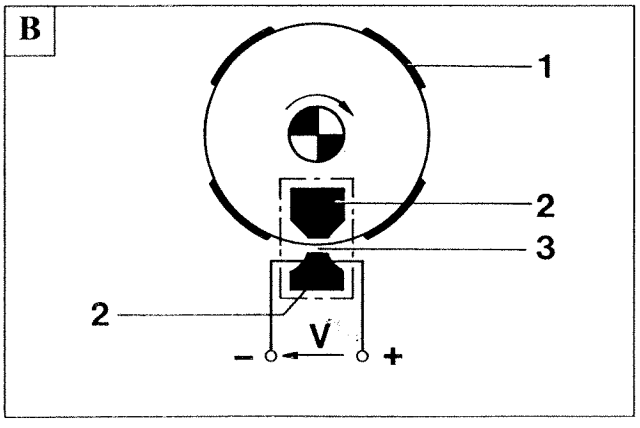

Diagram of vehicle's speed sensor

In pratice, to obtain this change, through the sensor there passes a metal ring (joined to the pinion driven by the relay on the differential) which comprises a series of gaps (B).
In its movement, when the ring covers the sensor, the magnetic field is blocked (low signal), whereas while the gap passes, the field recloses (high signal).
Hence the number of signals detected over a time unit is proportional to the vehicle speed, while the variation in number of signals in the time unit is proportional to the vehicle's acceleration/deceleration.

1. Deflector
2. Magnetic material
3. Gap

Copyright Fiat Auto

page

REAR SUSPENSION
- Removing 1
- Dismantling-reassembly 7
- Refitting 7
- Stub axle bush 9

WHEEL GEOMETRY
- Rear wheel geometry 10

TIGHTENING TORQUES
- Rear suspension 11

Copyright Fiat Auto

COPYRIGHT FIAT AUTO

The reproduction, even partial, of the text and illustrations is prohibited.

The information contained in this publication is purely indicative and could be out of date following modifications made by the Manufacturer, at any time, for technical or commercial reasons or in order to conform to legal requirements in the various countries.

Fiat Auto S.p.A.
D.M.C. - M.P.S.
Servizi Post Vendita - Assistenza Tecnica
10040 Volvera - TO - (Italia) - Largo Senatore G.Agnelli, 5
Publication no. 506.475/14 - Giugno 1996 - 400
Printed in Italy - Tip. Sosso - Grugliasco - Torino
order no. 60444399

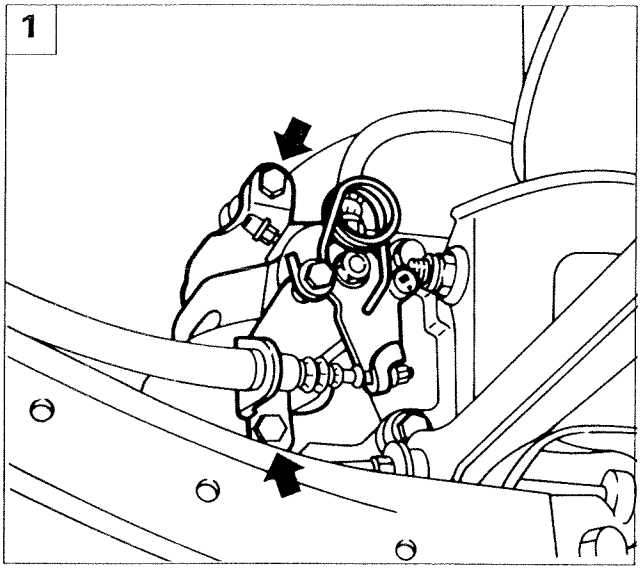

P3U01DG01

REMOVING

NOTE *This Section describes the procedure for removing-refitting the rear suspension on the LANCIA k '96 range, which is different from the preceding version because it has a different anti-roll bar.*
For aspects not covered in this publication, refer to the previous LANCIA k model (Publication no. 506.475).

Brake disc

Place the car on ramps and remove the rear wheels, then proceed as described below:

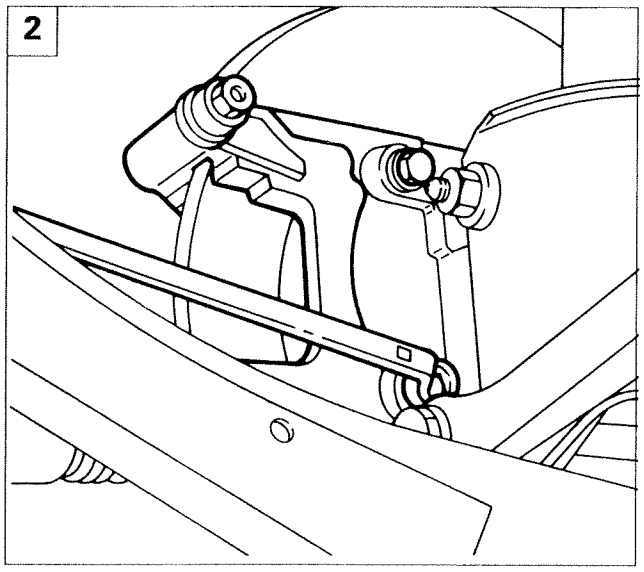

P3U01DG02

1. undo the brake caliper bolts and remove the caliper, then remove the brake linings;

NOTE *The bolts securing the caliper case are self-locking and must be replaced whenever they are unscrewed or slackened.*

2. undo the bolts securing the caliper mounting bracket and remove the latter;

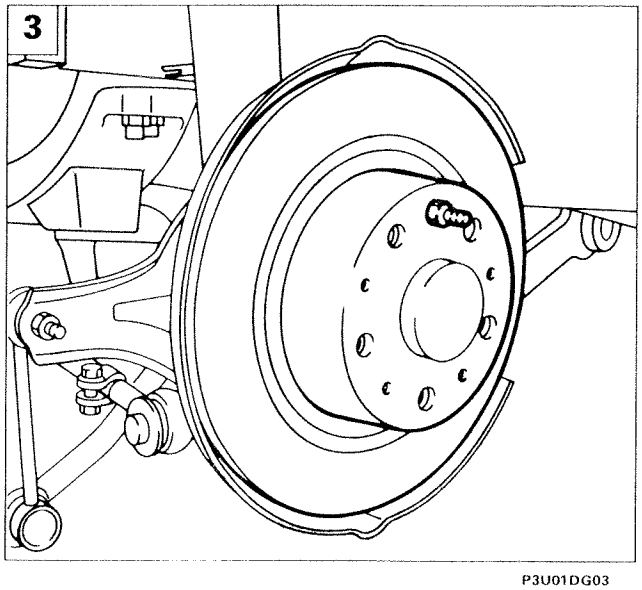

P3U01DG03

3. undo the bolt and remove the brake disc.

Copyright Fiat Auto

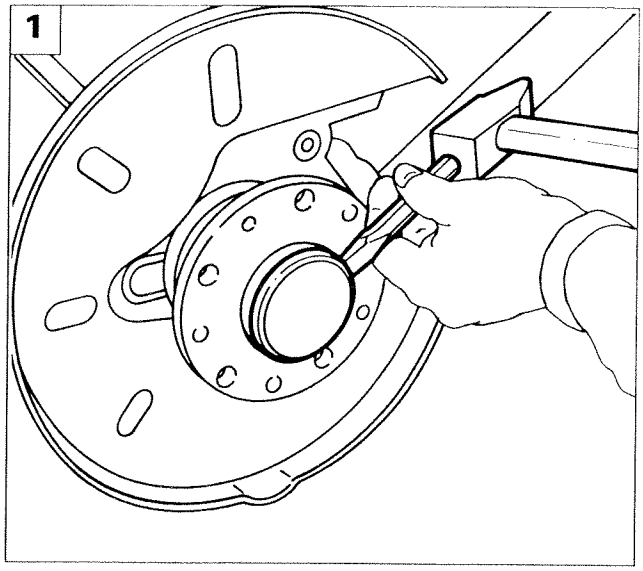

P3U02DG01

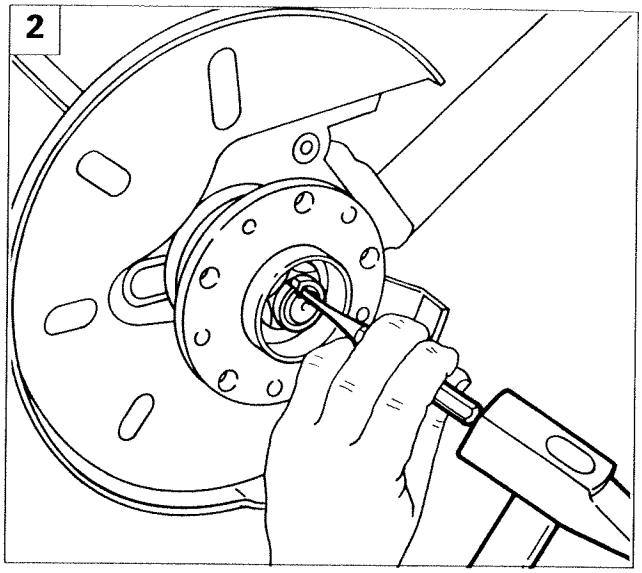

P3U02DG02

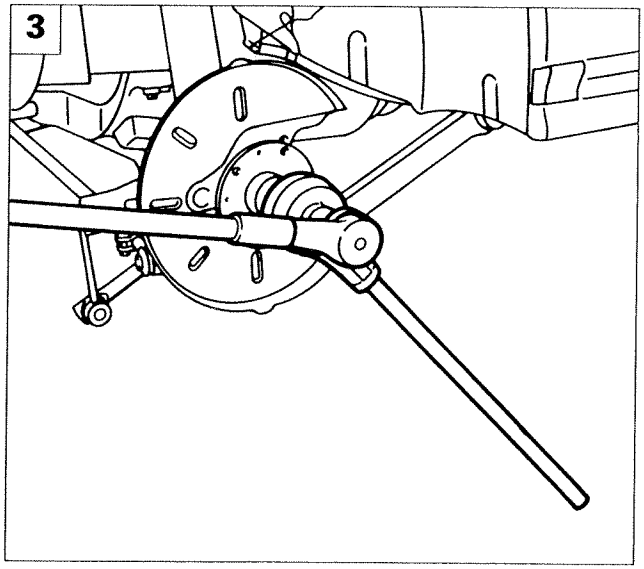

P3U02DG03

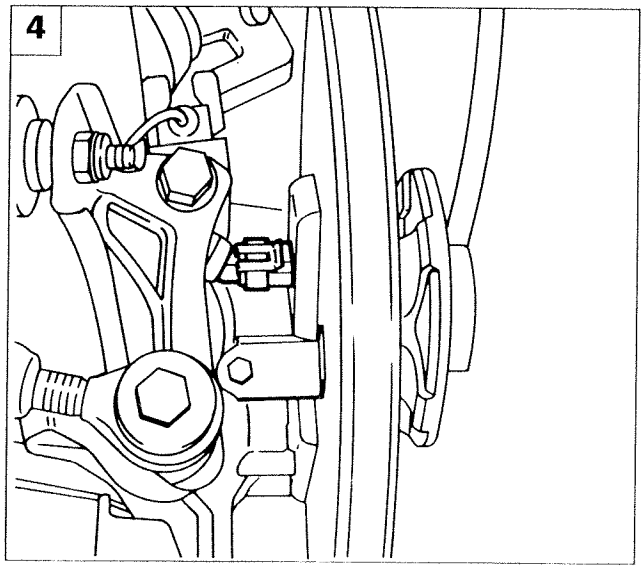

P3U02DG04

Wheel hub/bearing/wheel speed sensor

Carry out the following operations:

1. remove the wheel hub cap using a chisel;
2. relieve the staking on the nut securing the wheel hub;
3. undo the nut securing the wheel hub;

NOTE *To undo the nut, use a demultiplier as shown in the figure; rest the demultiplier rod on the floor to obtain a reaction against the dismantling torque.*

4. remove the wheel rpm sensor connector;

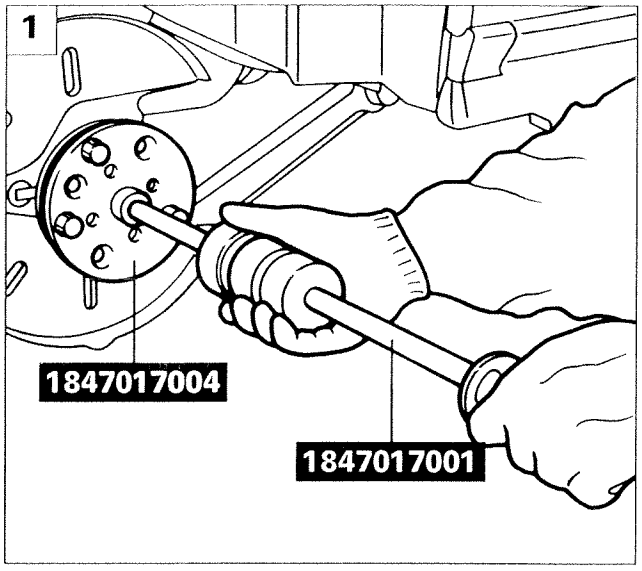

P3U03DG01

1. remove the wheel hub using tool 1847017001 with the plate 1847017004;

NOTE *The wheel hub is integral with the bearing and the rear wheel speed sensor. These three parts cannot be separated, so if there is a fault or malfunction on the wheel speed sensor, the complete wheel hub must be replaced.*

Check the bearing for noise or excessive play; if it is faulty, the complete wheel hub must be replaced.

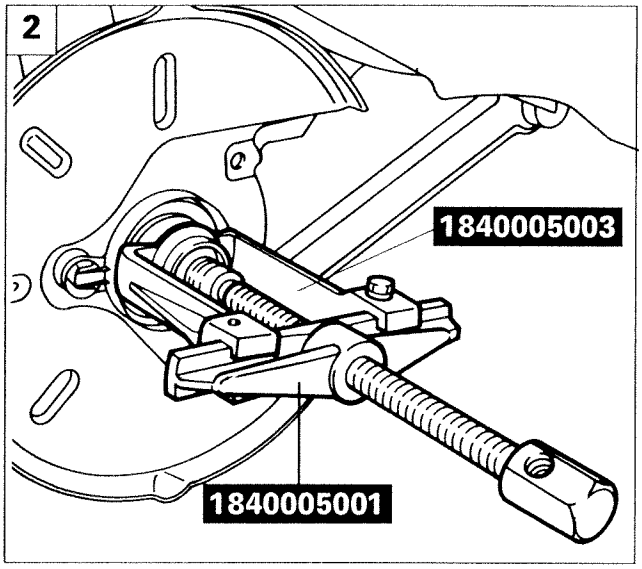

P3U03DG02

2. the removal of the wheel hub/bearing/wheel speed sensor may destroy the bearing; if the bearing inner race remains on the stub axle, remove it using the puller 1840005001 with the ends 1840005003;

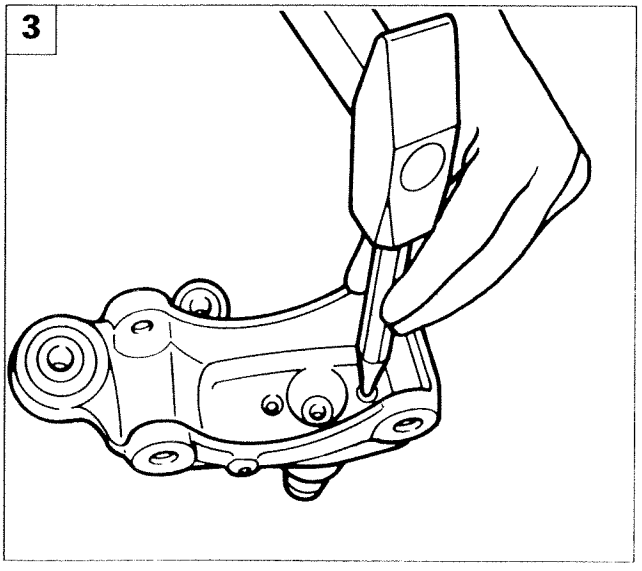

P3U03DG03

3. if it is not possible to use the puller because the bearing inner race has remained home on the stub axle, remove the inner race by working on the rear of the stub axle (after removing it from the suspension) with a drift, as shown in the figure.

Copyright Fiat Auto

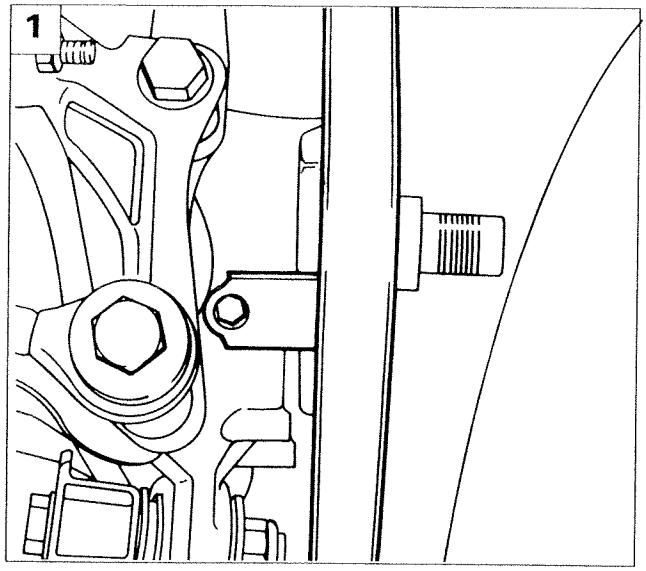

P3U04DG01

Longitudinal arm

Carry out the following operations:

1. undo the bolt and remove the dust cover;

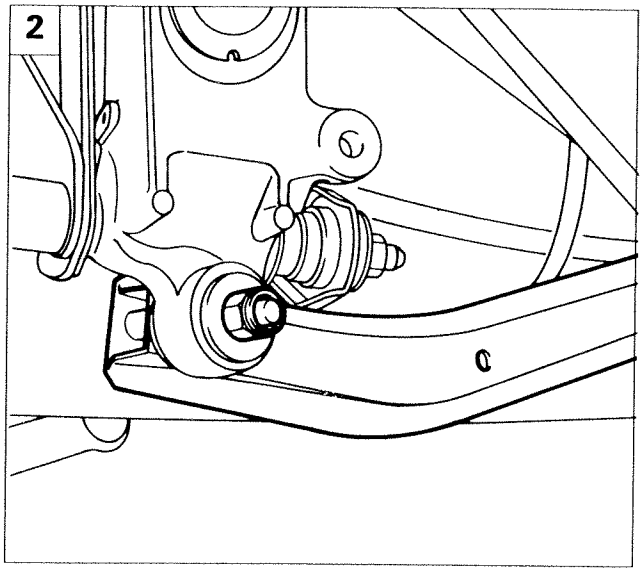

P3U04DG02

2. undo the bolt securing the longitudinal arm to the stub axle;

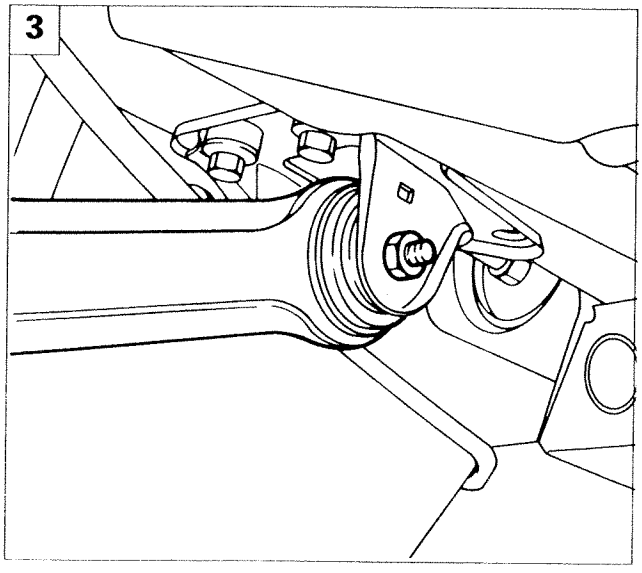

P3U04DG03

3. undo the bolt securing the longitudinal arm to the body shell and remove the longitudinal arm.

NOTE *The rubber bush must not be cracked or worn, otherwise the complete longitudinal arm must be replaced.*

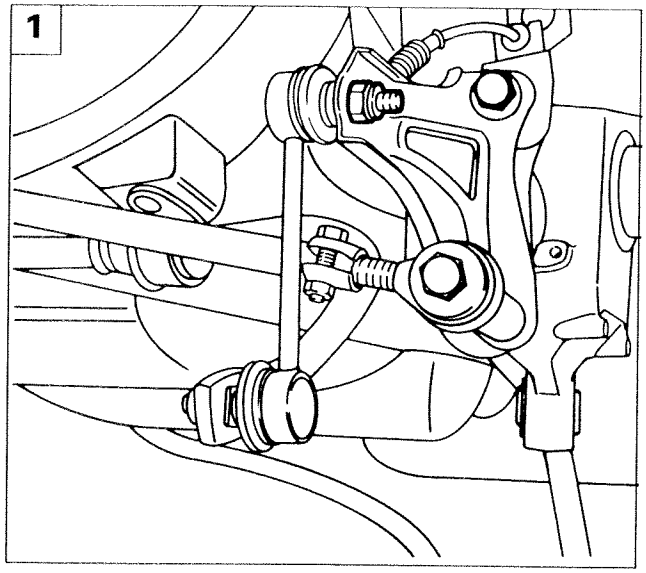

P3U05DG01

Anti-roll bar

Carry out the following operations:

1. undo the nut securing the link to the mounting bracket;

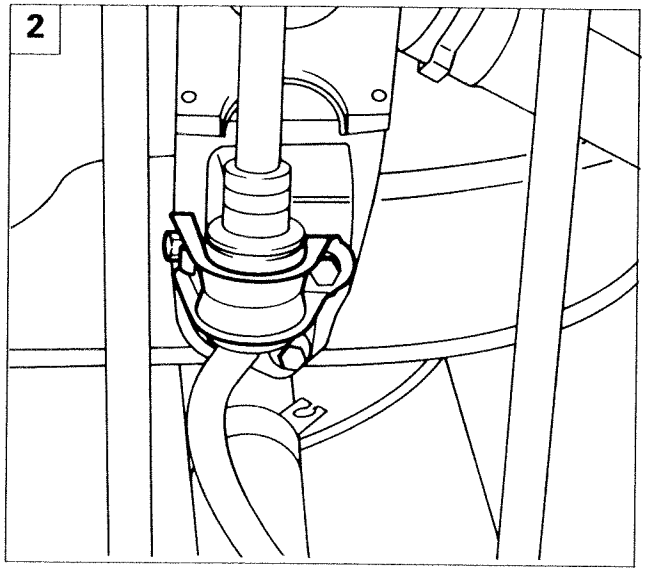

P3U05DG02

2. undo the bolts securing the two anti-roll bar mountings;

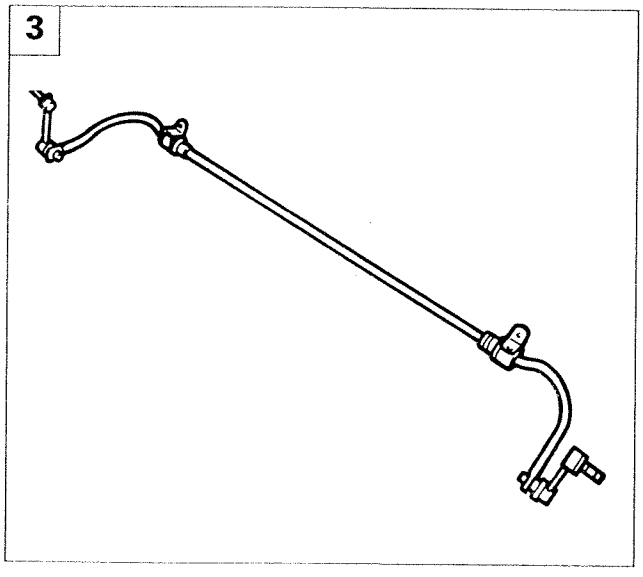

P3U05DG03

3. remove the anti-roll bar.

Copyright Fiat Auto

44.

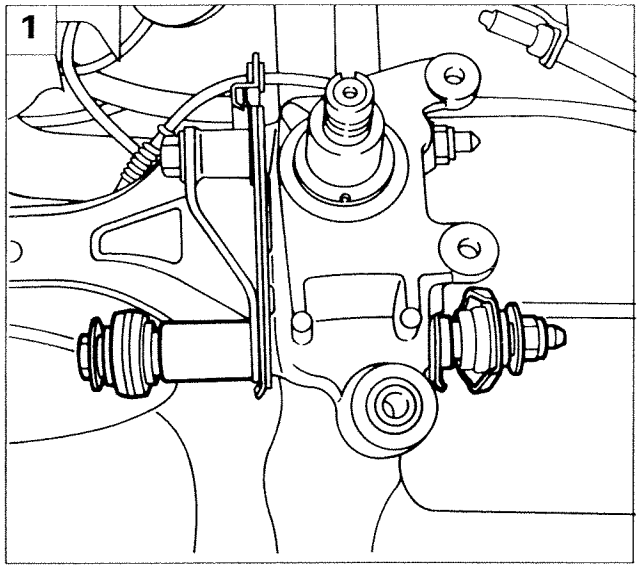

P3U06DG01

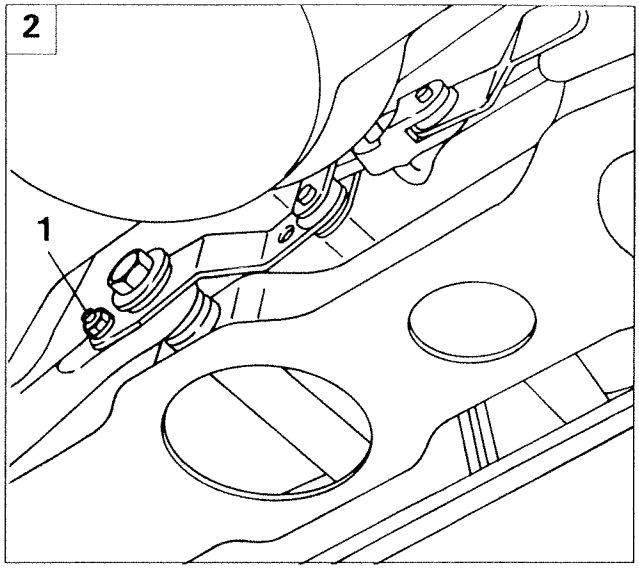

P3U06DG02

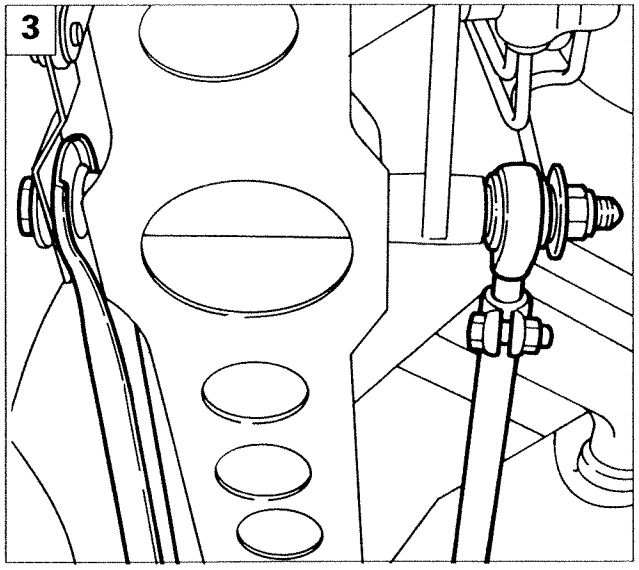

P3U06DG03

Transversal rods

Carry out the following operations:

1. remove the bolt securing the transversal rods and shock absorber to the stub axle, with bushes and spacers;
2. undo the bolt securing the load proportioning valve bracket to the transversal rod;
3. undo the bolt securing the transversal rods to the rear beam, then remove the transversal rods.

NOTE *To withdraw the bolt securing the transversal rods, it is necessary to remove the petrol tank.*

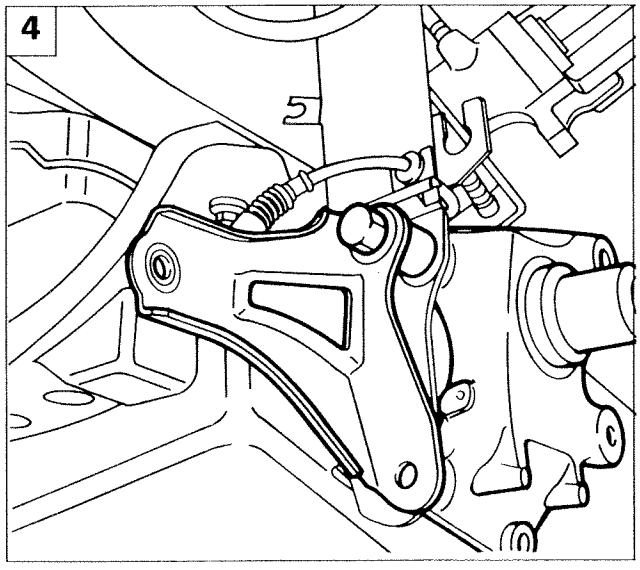

P3U06DG04

Stub axle

4. Remove the stub axle by undoing the top bolt securing the stub axle to the shock absorber.

NOTE *The stub axle must not be cracked, deformed or worn, otherwise it will have to be replaced.*
Clean the stub axle shaft thoroughly using a metal brush and then compressed air.

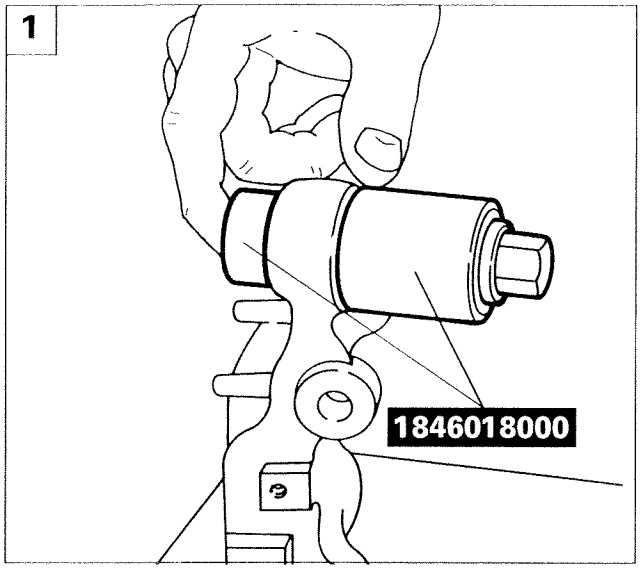

P3U07DG01

DISMANTLING-REASSEMBLY

Stub axle bush

Carry out the following operations:

1. withdraw the bush from the stub axle using tool 1846018000;

The rubber bush must not be cracked or worn, otherwise it will have to be replaced.

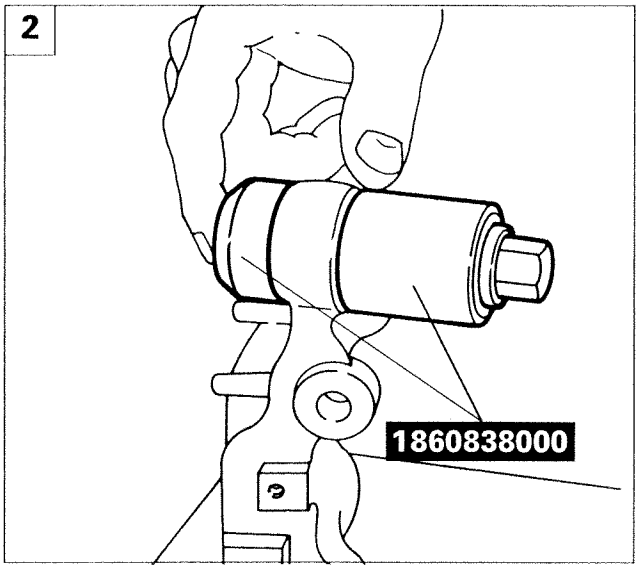

P3U07DG02

2. fit the bush on the stub axle using tool 1860838000;

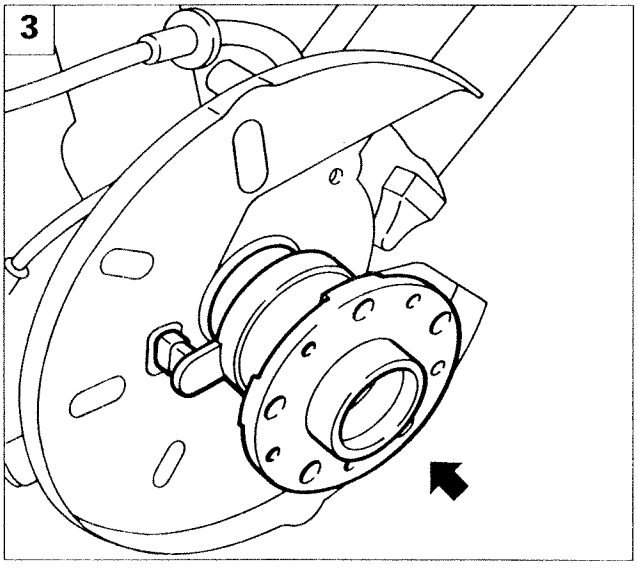

P3U07DG03

REFITTING

NOTE *To refit, reverse the procedure for removal, tightening the various suspension components to the specified torques.*

After fitting the stub axle and dust cover, carry out the following operations:

3. fit a new wheel hub/bearing/wheel speed sensor assembly;

Copyright Fiat Auto

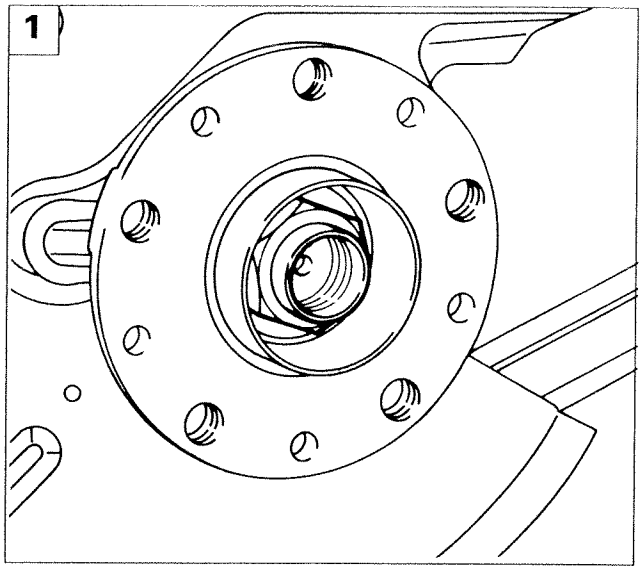

P3U08DG01

1. apply LOCTITE 270 adhesive to the threaded end of the stub axle, then screw on a new nut until the hub is fitted fully on the stub axle;

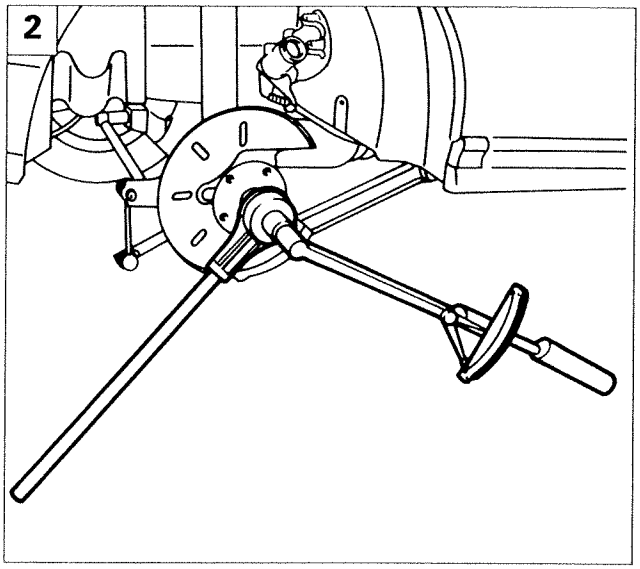

P3U08DG02

32 daNm

2. tighten the nut to a torque of 32 daNm within five minutes of applying the adhesive.

NOTE *To tighten the nut, use a demultiplier as shown in the figure; rest the demultiplier rod on the floor to obtain a reaction to the tightening torque.*

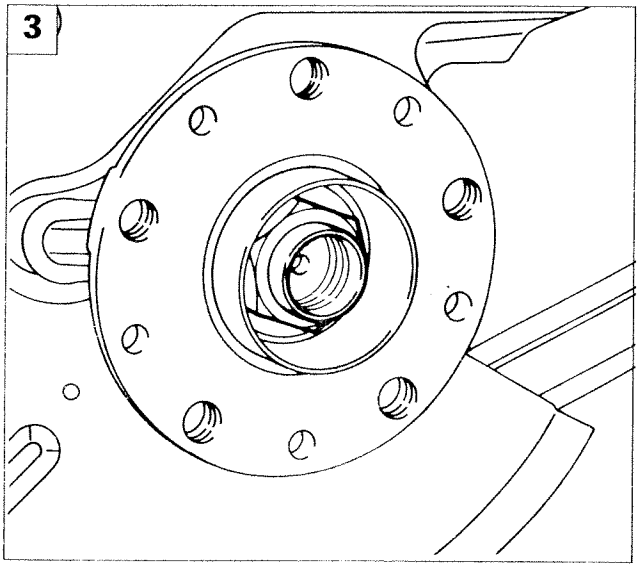

3. relieve the staking of the nut collar.

The collar should be cut on the notch of the hub on the side opposite that of closure, to offer greater resistance to spontaneous untightening.

Also check the rear wheel geometry.

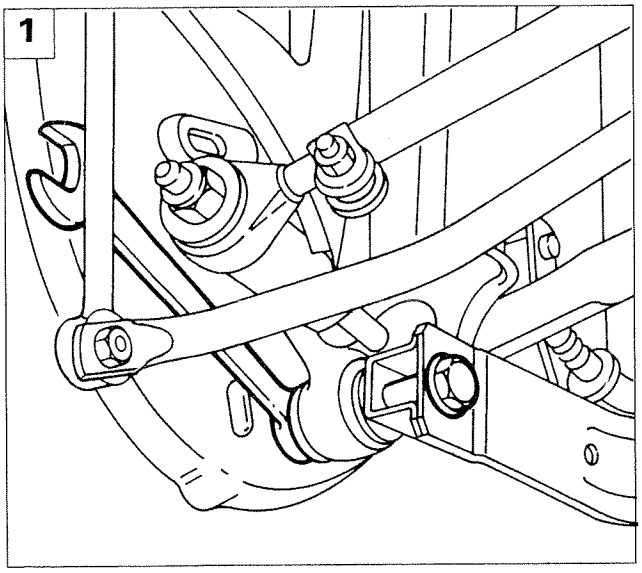

P3U09DG01

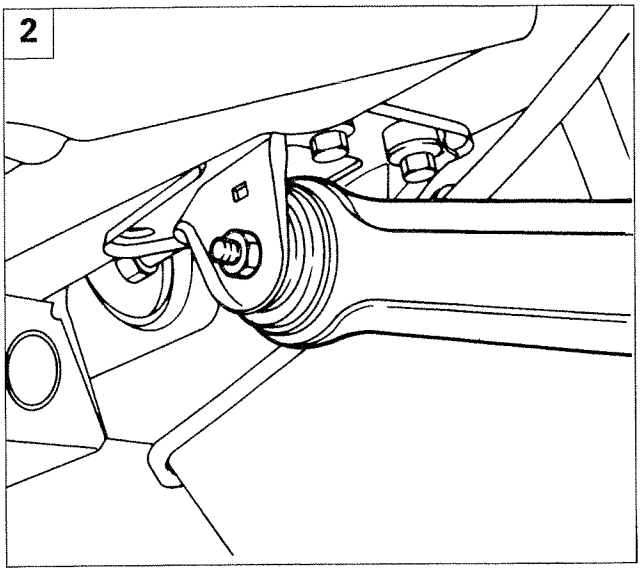

P3U09DG02

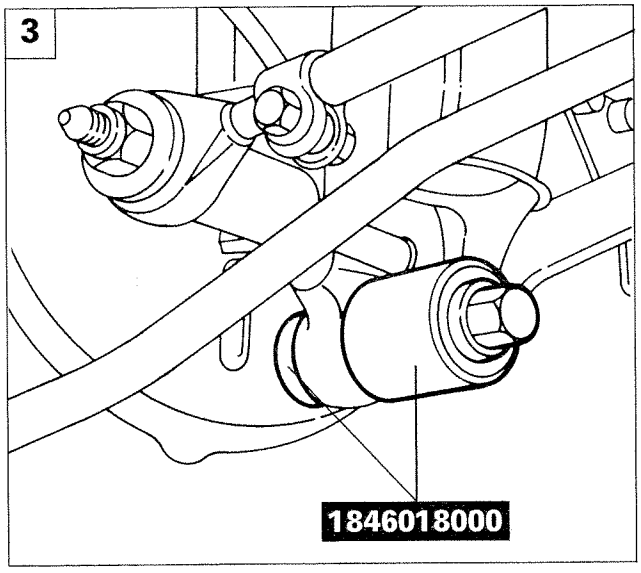

P3U09DG03

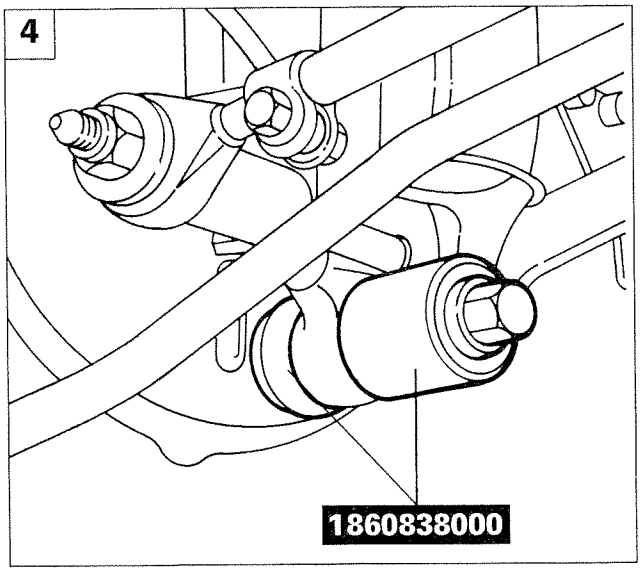

P3U09DG04

STUB AXLE BUSH

Removing-refitting on vehicle

Place the car on ramps and remove the rear wheels, then proceed as described below:

1. undo the nut on the longitudinal arm bolt;
2. undo the bolt securing the longitudinal arm to the stub axle;
3. use tool 1846018000 to withdraw the bush from the stub axle;

The rubber bush must not be cracked or worn, otherwise it will have to be replaced.

4. use tool 1860838000 to fit the bush into the stub axle;

NOTE *Fit the longitudinal arm by reversing the procedure for removal.*

Copyright Fiat Auto

44.

REAR WHEEL GEOMETRY

The wheel geometry must be checked after the following checks have been made:
- tyre pressures;
- the eccentricity and out of true of the wheel rims must not exceed 3 mm;
- wheel bearing endfloat.

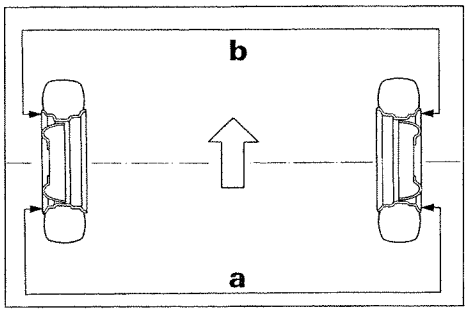

P3U10DG01

TOE-IN

a-b = 1.5- 3.5mm

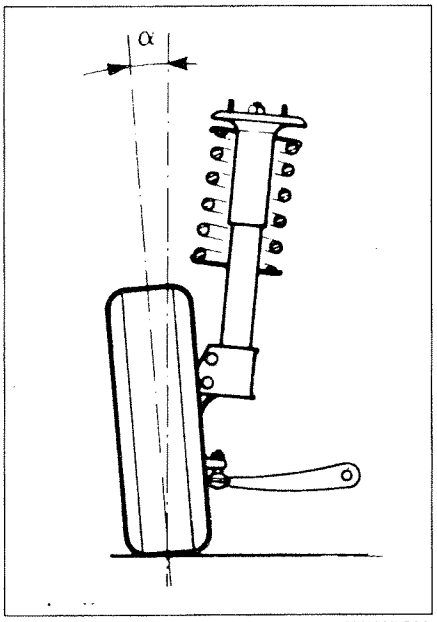

P3U10DG04

CAMBER (non adjustable)

α = -0° 25'- -1° 5'

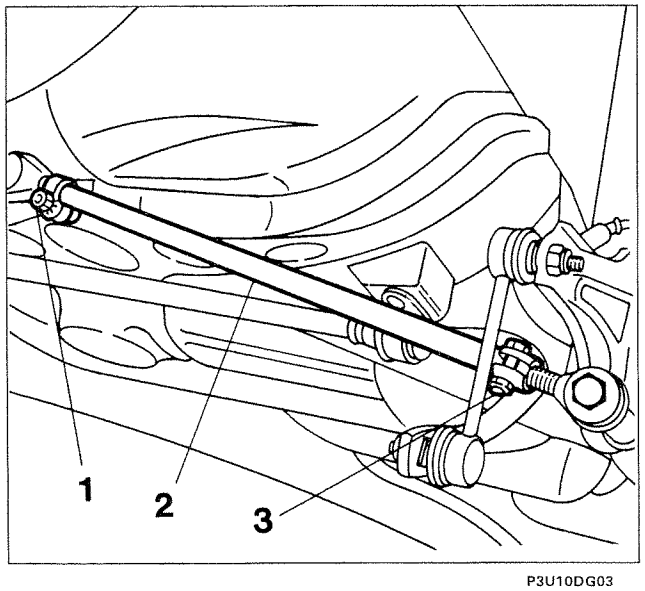

P3U10DG03

If, when checking the toe-in, values other than the specified values are found, slacken the nuts (1) and turn the rod (2) until the desired condition is obtained.
The adjustment should be carried out on the tie-rods of both wheels.

If the wheel camber angle is different from the specified value, the car's body shell must be checked.

PART	Thread	Tightening torque daNm

REAR SUSPENSION

Nut securing rear wheel hub to stub axle	M 24 × 1.5	32
King pins securing rear wheels to hub	M 12 × 1.25	9.8
Nut securing shock absorber to vertical link (stub axle)	M 12 × 1.25	9
Self-locking nut securing shock absorber to flexible mounting	M 14 × 1.5	7
Self-locking nut securing shock absorber mounting to body shell	M 8	2.5
Bolt securing longitudinal rod to vertical link (stub axle)	M 12 × 1.25	10
Bolt with tapered and plain shake-proof washer for securing longitudinal rod mounting to body shell	M 10 × 1.25	6
Nut securing longitudinal rod to support	M 10 × 1.25	6
Bolt securing stabilizer bar U-bolt to rear beam	M 8	2.8
Bolt securing stabilizer bar to link	M 10 × 1.25	5
Bolt securing link to mounting bracket	M 10 × 1.25	5
Bolt with tapered and plain shake-proof washer securing rear beam to body shell	M 10 × 1.25	6
Self-locking nut securing transversal rods to rear beam and shock absorber	M 12 × 1.25	9
Bolt securing sleeve for adjusting rear transversal rods	M 8	1.5

Copyright Fiat Auto

Petrol engine overhaul
volume 2

3

Engine 1998 20V

- 2 OHC with electronic injection (5 cylinders)
  code 838 A1.000
  code 838 A6.000

Engine 2446 20V

- 2 OHC with electronic injection (5 cylinders)
  code 838 A2.000

Workshop Manual

W004DV

W002SV

TABLE SHOWING APPLICATION OF ENGINES TO CARS AND COMMERCIAL VEHICLES

Engine type	Car or commercial vehicle to which engine is fitted
834.F.000	THEMA 2959 V6 i.e.
R G X	LANCIA Z 1998 turbo
838 A1.000	LANCIA k 1998 20V
838 A6.000	LANCIA k 20V 1996 range
838 A2.000	LANCIA k 2446 20V
838 B.000	LANCIA k 2959 V6 24V
840A2.000 840A4.000	LANCIA Y 1370 12V
840A3.000	LANCIA Y 1242
182A4.000	LANCIA δ 1581 16V
183A2.000 183A1.000	LANCIA δ 1747 16V DEDRA 1747 16V

Copyright Fiat Auto

COPYRIGHT FIAT AUTO

The reproduction, even partial, of the text and illustrations is prohibited.

The information contained in this publication is purely indicative and could be out of date following modifications made by the Manufacturer, at any time, for technical or commercial reasons or in order to conform to legal requirements in the various countries.

Fiat Auto S.p.A.
D.M.C. - M.P.S.
Servizi Post Vendita - Assistenza Tecnica
10040 Volvera - TO - (Italia) - Largo Senatore G.Agnelli, 5
Publication no. 505.810/09 - Luglio 1996 - 400
Printed in Italy - Tip. Stampart - Torino
order no. 60444392

W001SV

WORKSHOP MANUAL COMPOSITION

As from May 1996, the **LANCIA Petrol engine service, volume 2,** manual is made up as follows:

Print no.	Engine type	No. pages	Section binder	Notes
505.810 (VII-92)	**2959 V.6 i.e. (834.F.000)**	1 - 67	1	2 OHC V. 6 with electronic injection
505.810/01 (VI-94)	**1998 turbo (RGX)**	1 - 62	2	1 OHC with electronic injection
505.810/02 (IX-94)	**1998 20V (838 A1.000) 1998 20V (838 A6.000) 2446 20V (838 A2.000)**	1 - 42	3	2 OHC 5 cylinders with electronic injection
505.810/02 (V-96)		36		
505.810/03 (IX-94)	**2959 V6 - 24V (838 B.000)**	1 - 47	4	2 OHC V6 - 24V with electronic injection
505.810/04 (VII-95)	**1370 - 12V (840 A2.000) (840 A4.000)**	1 - 41	5	1 OHC - 12V with electronic injection
505.810/05 (VII-95)	**1242 (840 A3.000)**	1 - 56	6	1 OHC with electronic injection
505.810/07 (XI-95)	**1581 16v (182 A4.000)**	1 - 49	7	2 OHC with electronic injection
505.810/08 (I-96)	**1747 16v (183 A2.000) (183 A1.000)**	1 - 49	8	2 OHC with electronic injection
505.810/06 (III-96)	**2959 V6 - 24v (838 B.000) 1996 range**	1 - 45	9	2 OHC V6 - 24v with electronic injection

Copyright Fiat Auto

1

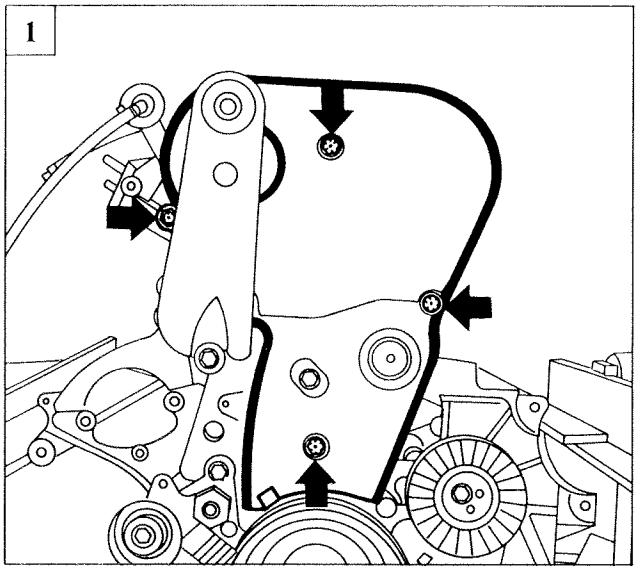

PW003L601

2

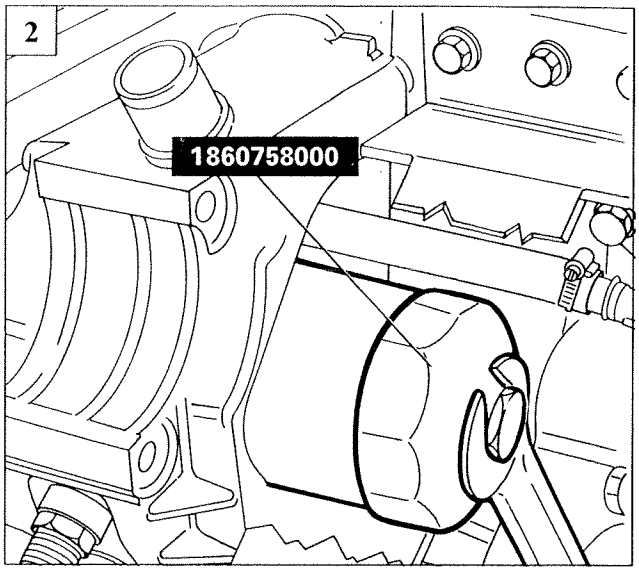

PW003L602

3

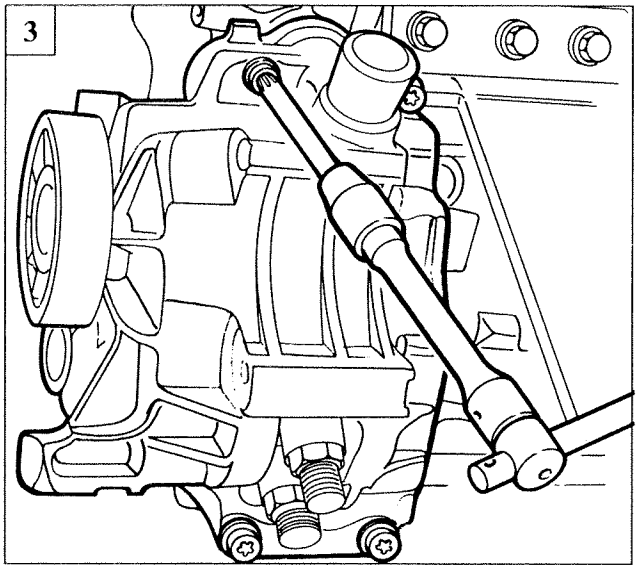

PK009L704

1. Remove timing belt guard.
2. Use tool indicated to remove oil filter.
3. Remove air conditioner compressor mount.
4. Remove heat exchanger with lines.
5. Disconnect external coolant line.

4

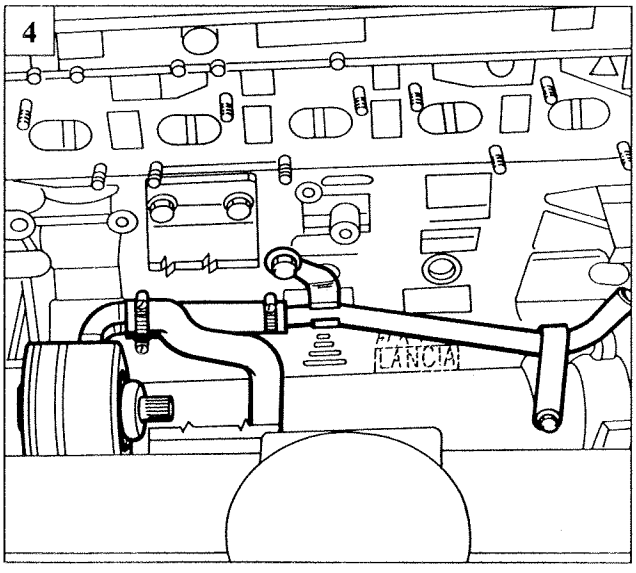

PW003L603

5

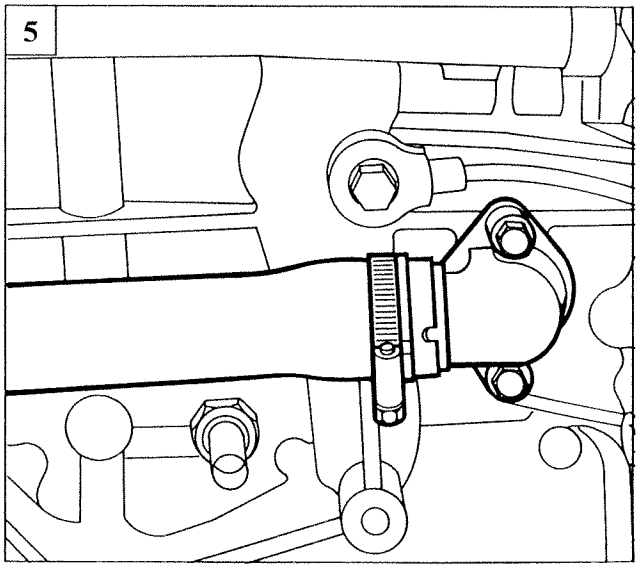

PW003L604

1998 20V 2446 20V

10.

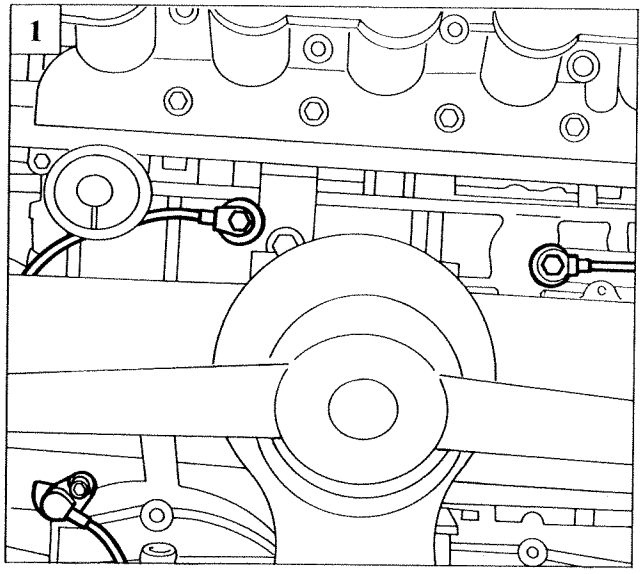

PW004L601

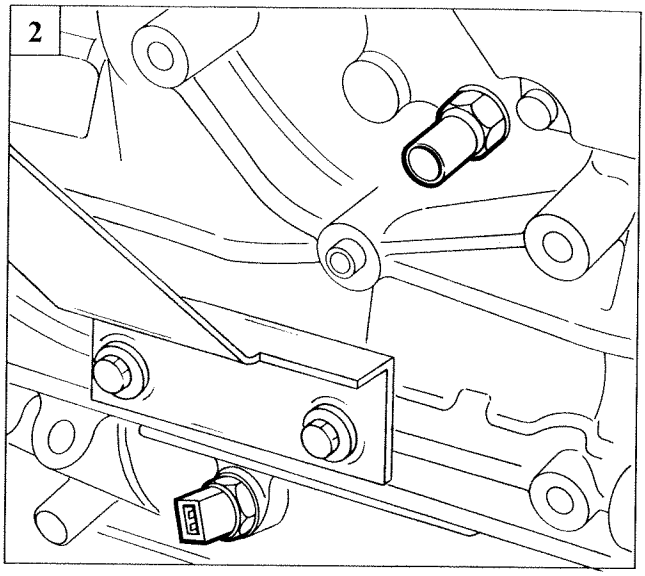

PK003L703

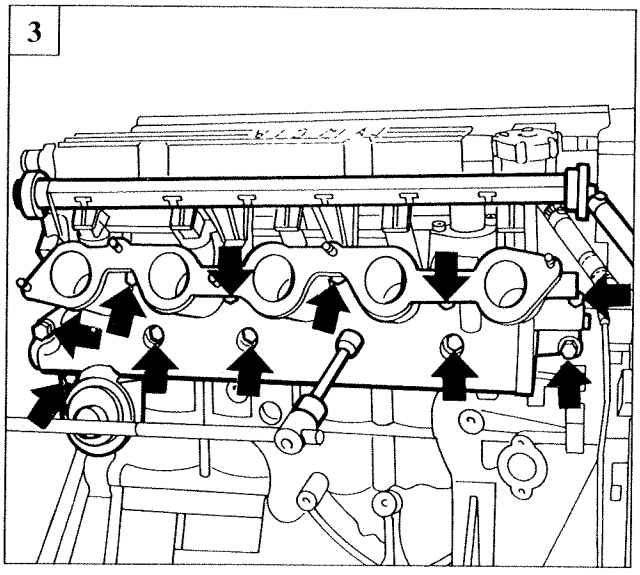

PW004L602

1. Remove temperature sensor and knock sensors.
2. Remove temperature and oil level sensors.
3. Use wrench indicated to remove intake manifold together with injector assembly.
4. Loosen belt tensioner retaining nut and remove timing belt.
5. Position tool 1860846000 as shown in order to prevent flywheel from turning.

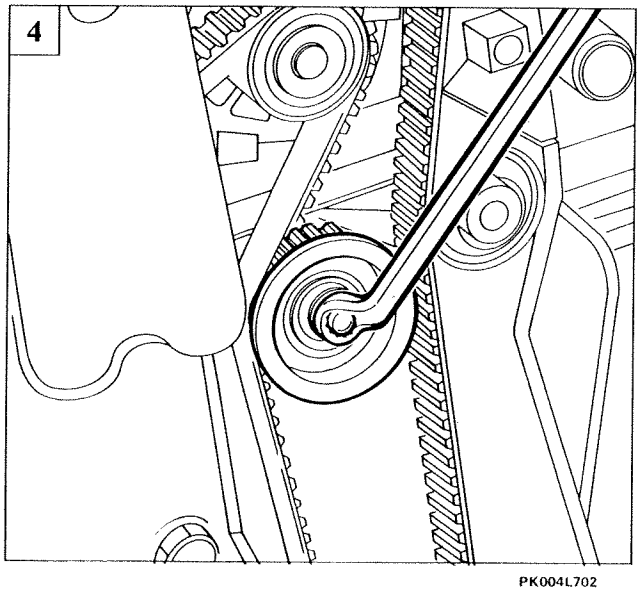

PK004L702

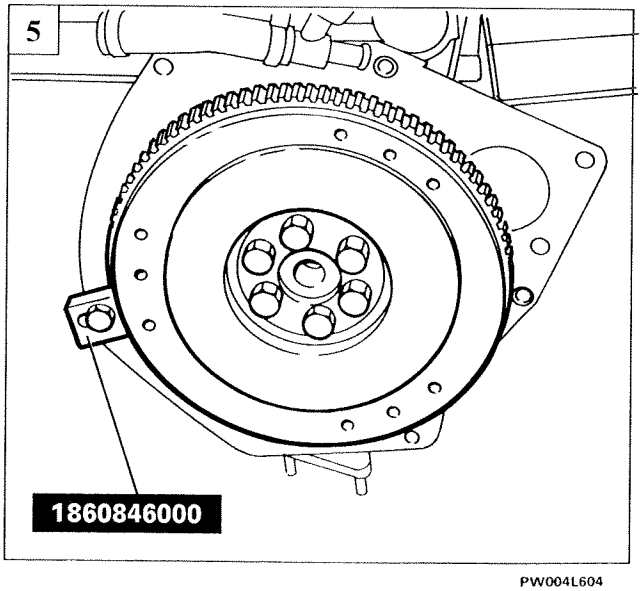

PW004L604

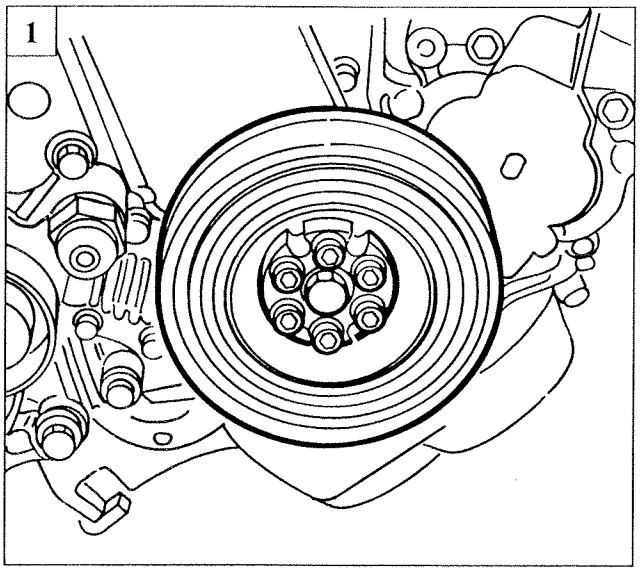

PW005L601

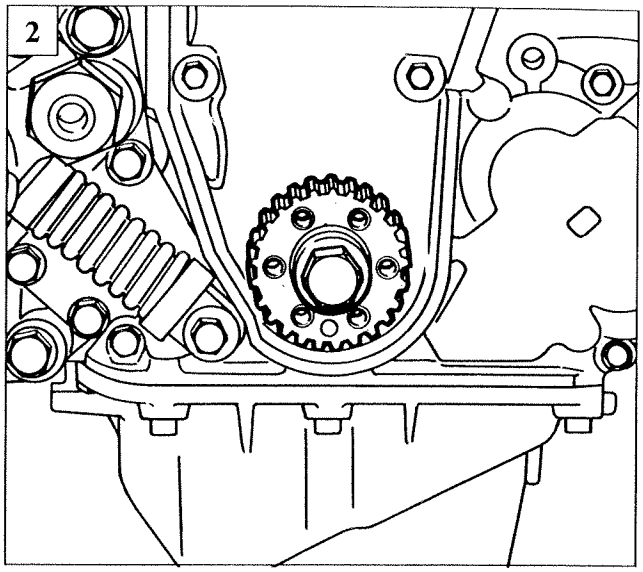

PW005L602

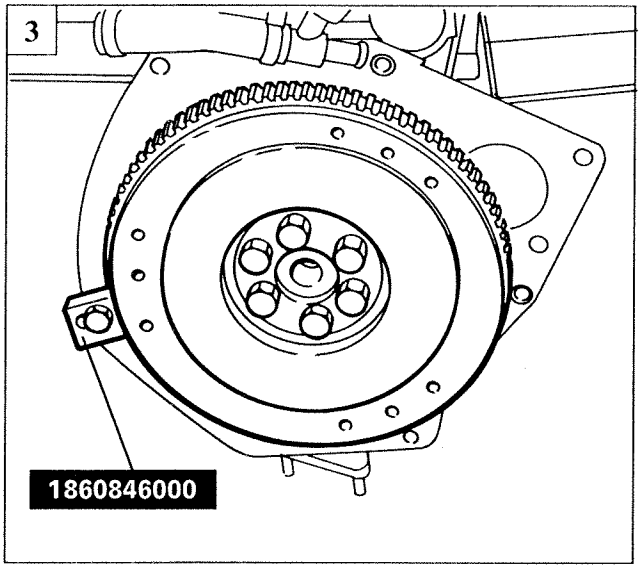

PW004L604

1. Remove auxiliary drive pulley.
2. Remove crankshaft drive gear by undoing screw with left-handed thread.
3. Remove flywheel and take off retainer positioned previously.
4. Remove flywheel guard.
5. Remove high tension coil mount.

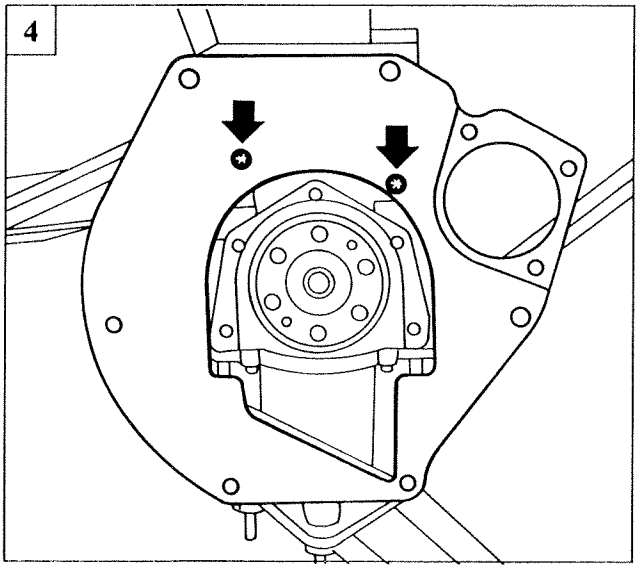

PW005L603

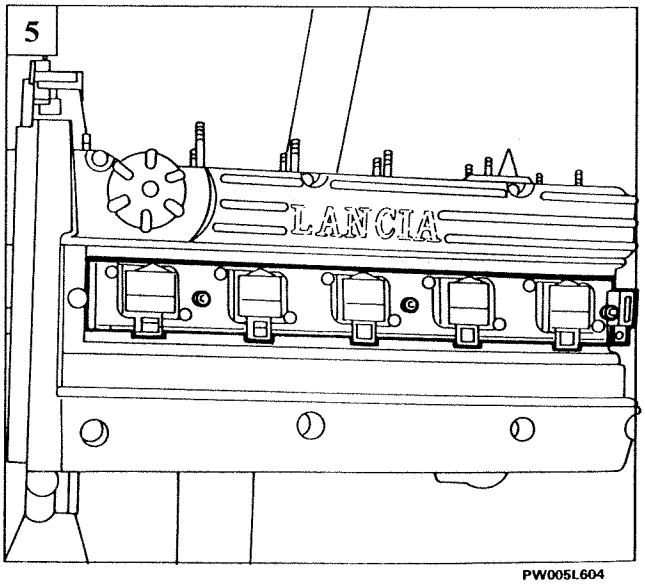

PW005L604

10.

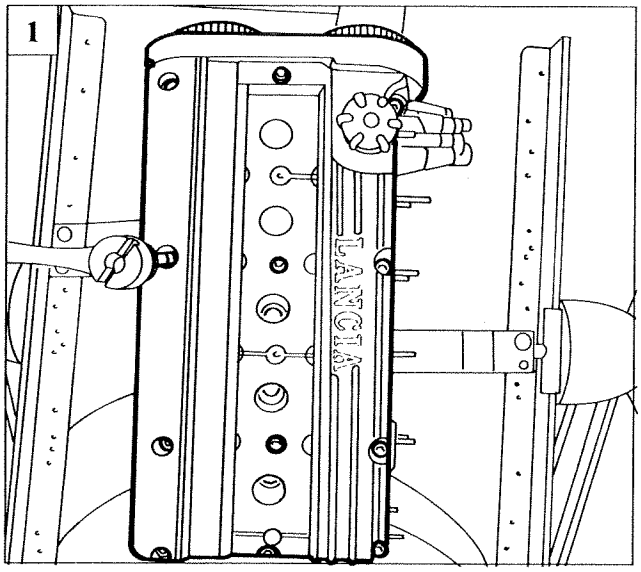

PW006L601

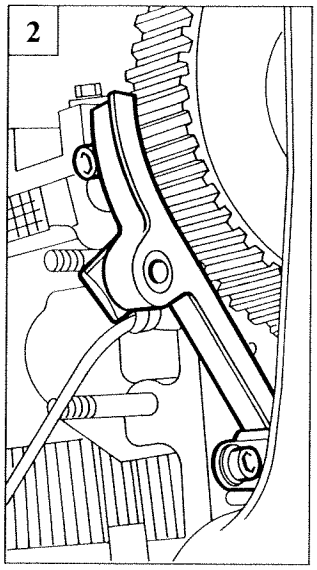

PW006L602

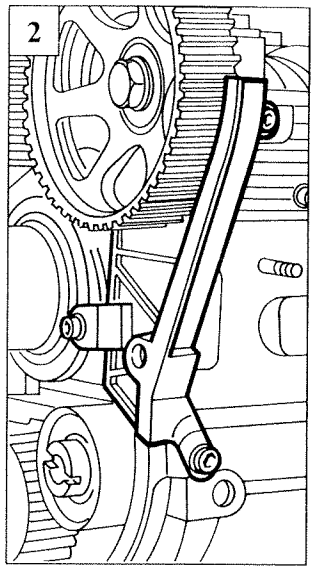

PW006L603

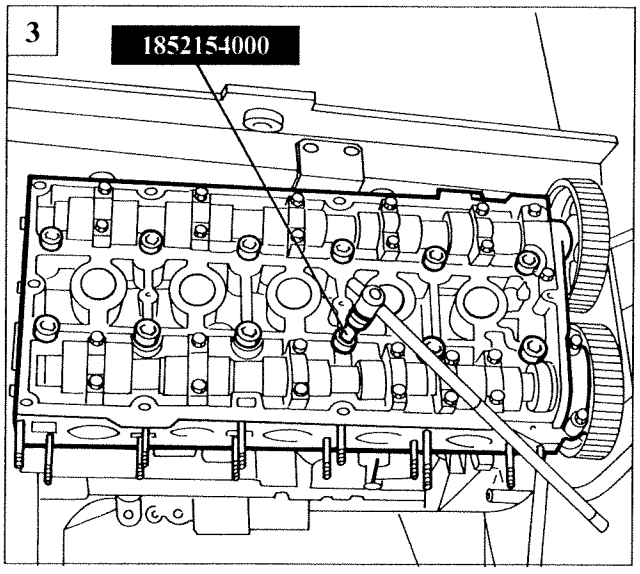

PW006L604

1. Remove cam cover.
2. Remove plastic side guards.
3. Separate cylinder head assembly from engine block by unscrewing retaining bolts with appropriate wrench.
4. Remove fixed tensioner by unscrewing the retaining bolt shown. If the bolt head is notched, use tool 1852159000.
5. Remove mounting plate with belt tensioner from engine block.

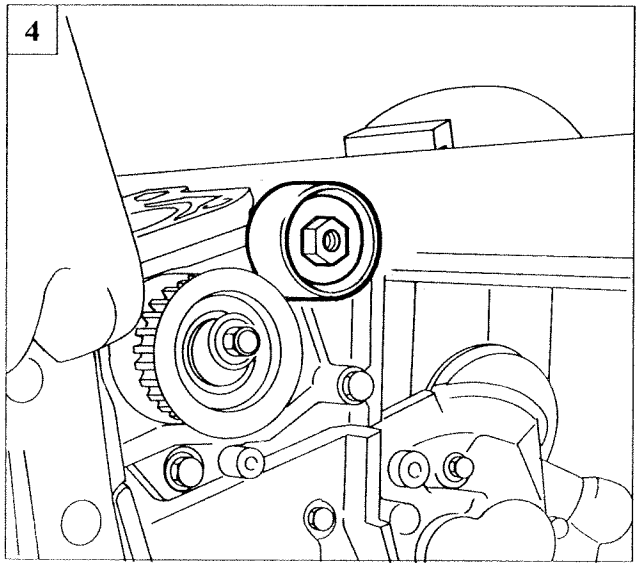

PW006L605

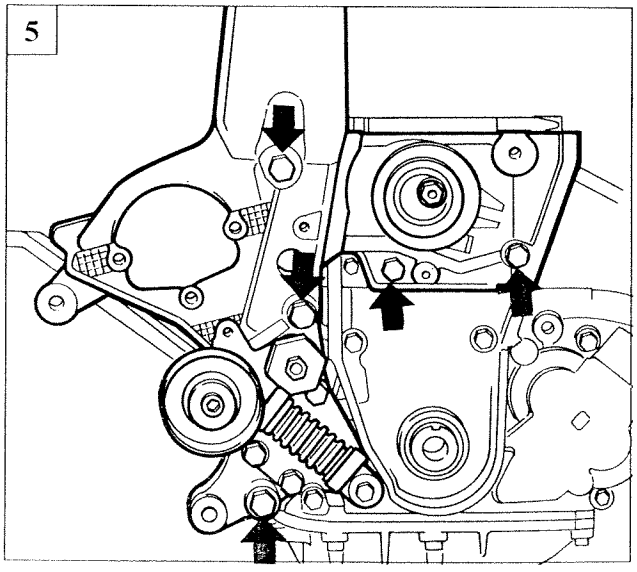

PW006L606

1

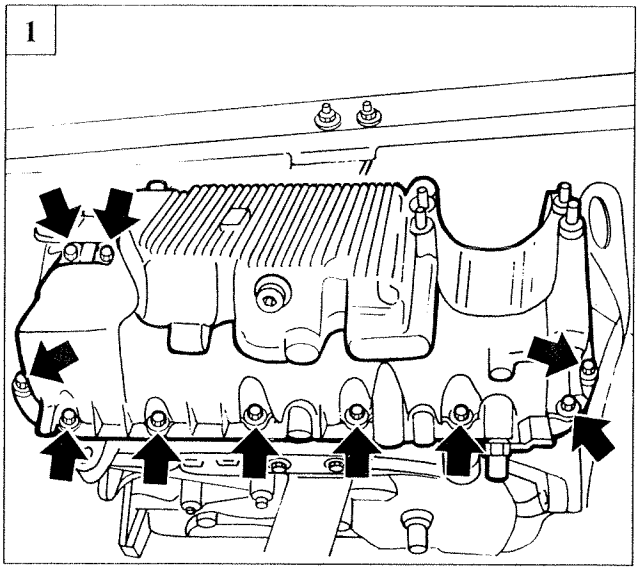

PK009L701

2

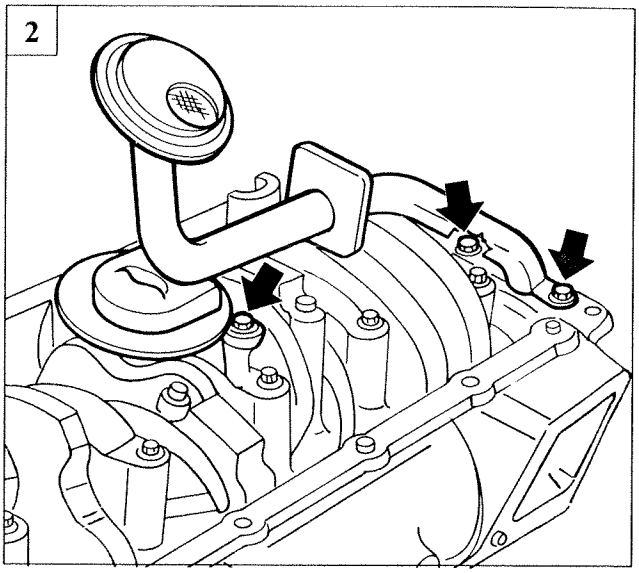

PK009L702

3

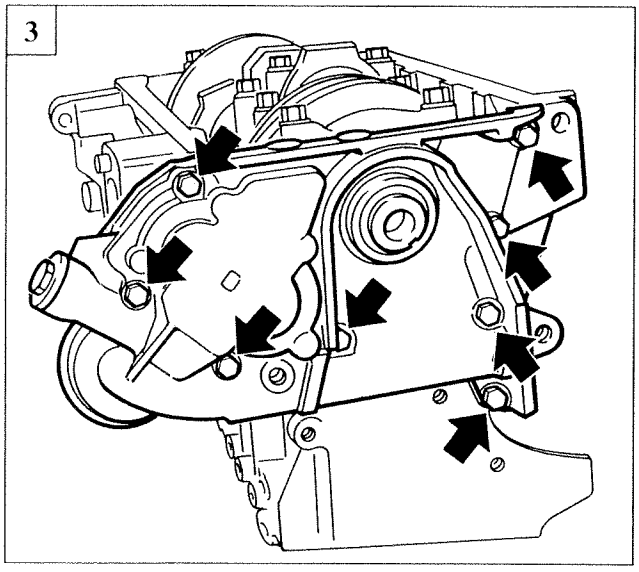

PW007L601

1. Use wrench 1860834000 to remove oil sump from engine block.
2. Remove oil suction head.
3. Remove oil pump front cover assembly.
4. Remove rear crankshaft cover.
5. Position tool 1860815000 as shown to allow crankshaft to be turned by hand and fasten in place.

4

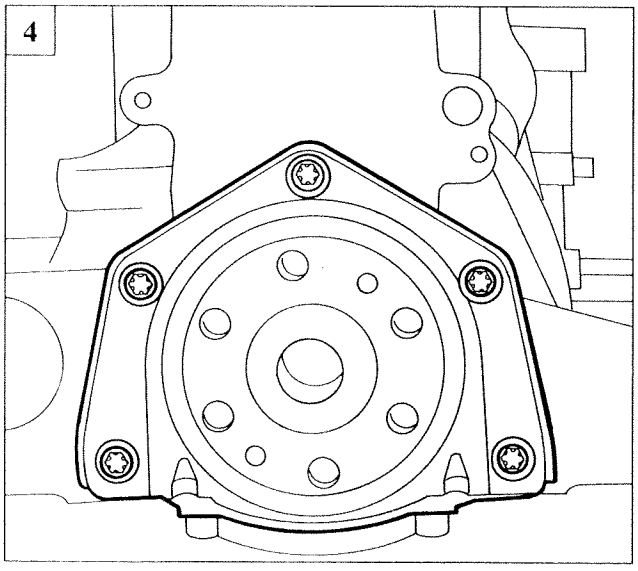

PW007L602

5

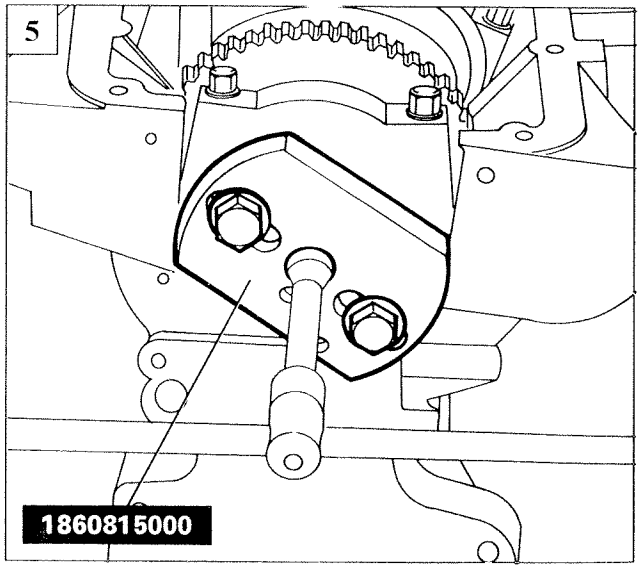

PW007L604

10.

1

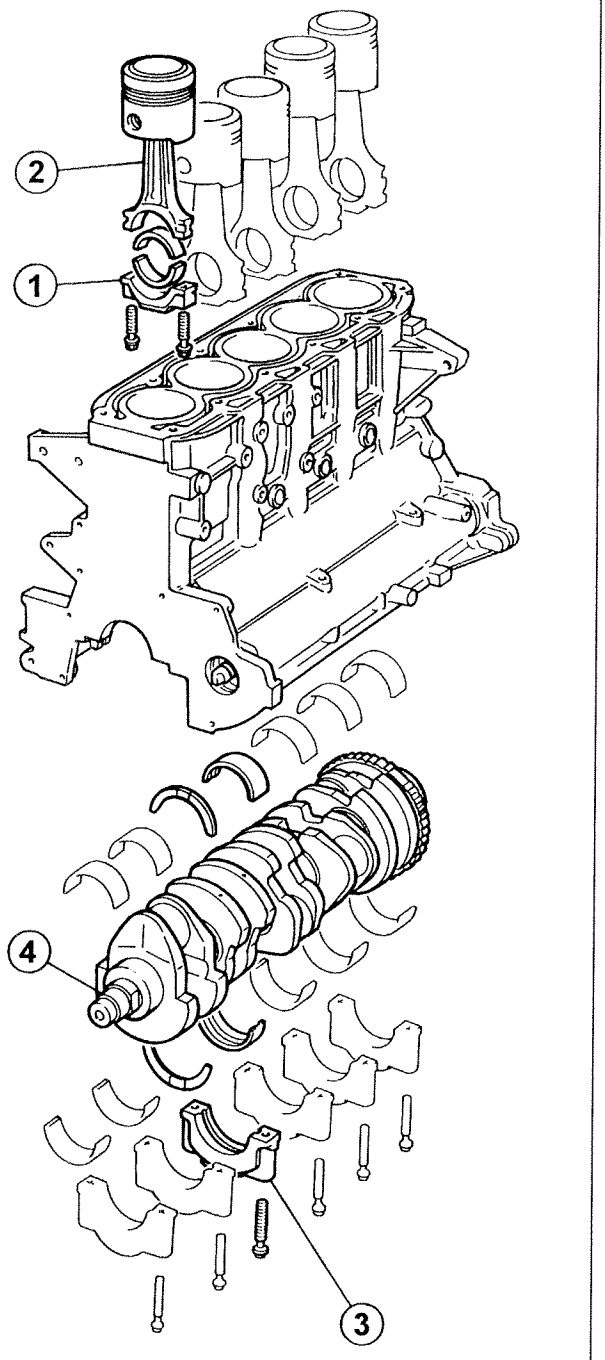

PW008L601

2

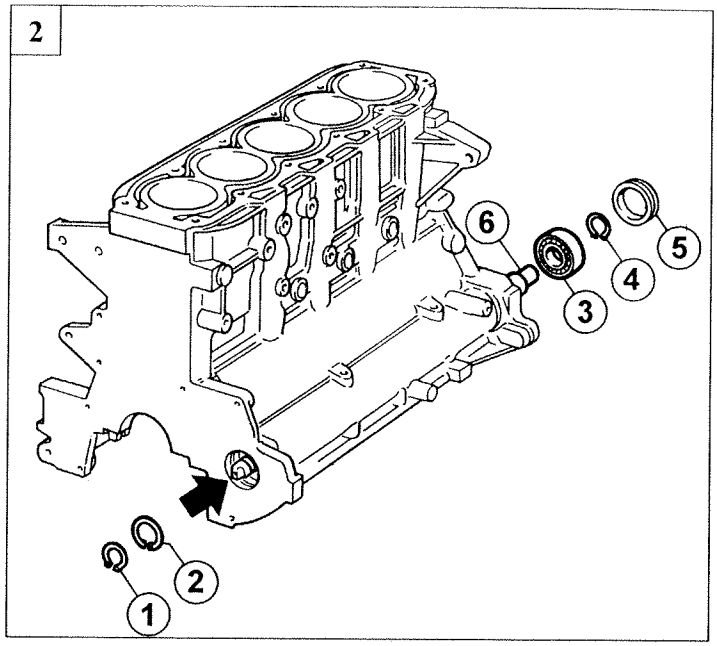

PK010L702

1. Unscrew the bolts fastening connecting rod caps (1) and remove connecting rod/piston assemblies (2). Remove tool for turning crankshaft, then unscrew main journal cap bolts and remove caps (3) and crankshaft (4).
2. Remove retaining rings (1 and 2) fastening front counter-rotating shaft bearing, then use a hammer with anti-impact material to push counter-rotating shaft toward rear of engine block. Movement of the assembly will bring about removal of plug (5) located in rear counter-rotating shaft seat. Then remove retaining ring (4) and bearing (3).
3. Remove front counter-rotating shaft bearing.

3

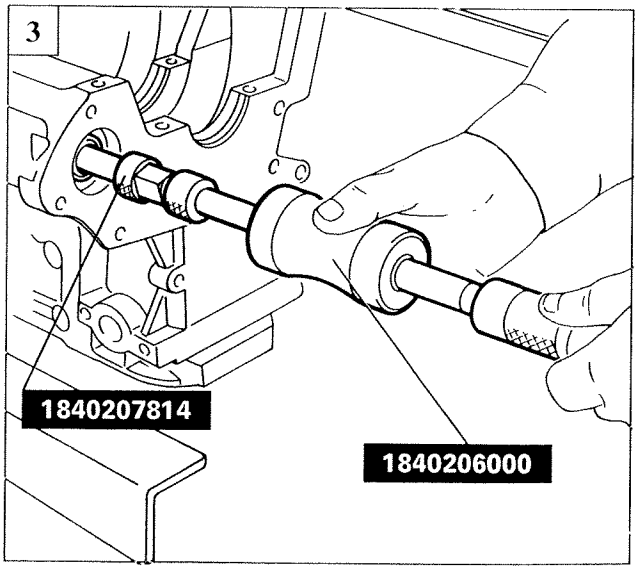

PK010L703

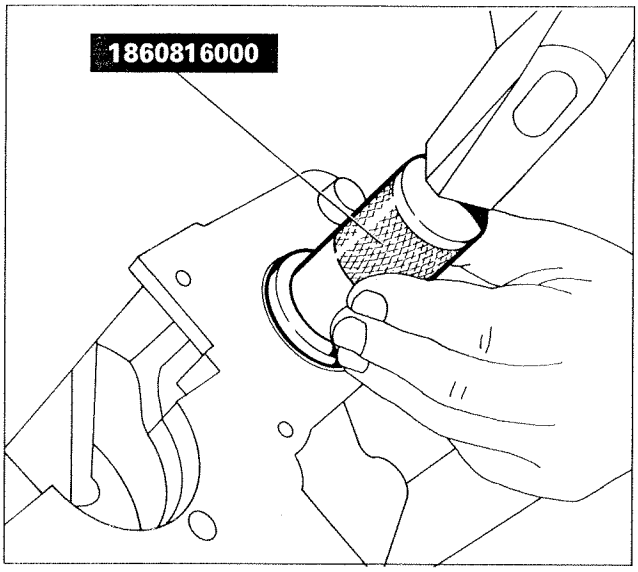

PK011L701

Position counter-rotating shaft in relevant seat and fit rear bearing using drift 1860816000 shown in figure.

COUNTER-ROTATING SHAFT

In an internal combustion engine, forces acting against the piston crown set up by expanding gases are joined by:

- centrifugal inertia forces originating from rotating masses;
- 1st and 2nd order alternating forces originating from masses with alternate motion.

The engine is balanced with the purpose of eliminating vibrations generated by these imbalances while the engine is running.
First order inertia forces (i.e. turning at same speed as engine) are balanced by a single balance shaft, whereas second order inertia forces (rotating at twice the speed of the engine) are counterbalanced by engine geometry for all practical effects.
The balance shaft is cranked by a silent chain drive and a set of gears (oil pump drive gears) to permit perfect synchronism with the crankshaft.

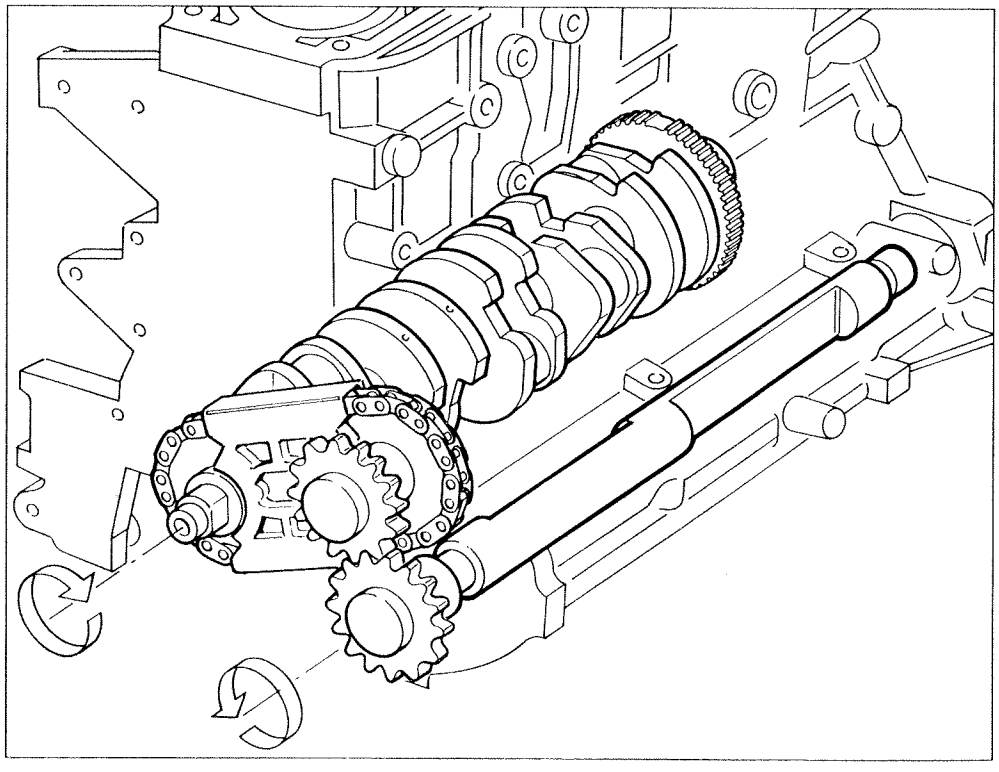

PW009L601

10.

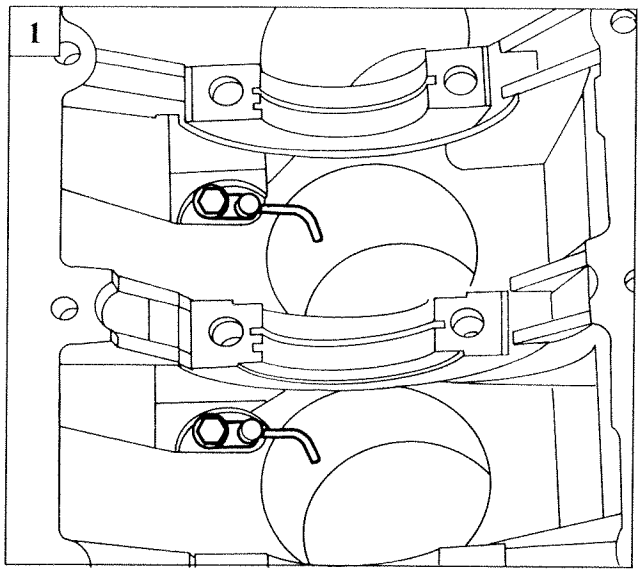

PK012L701

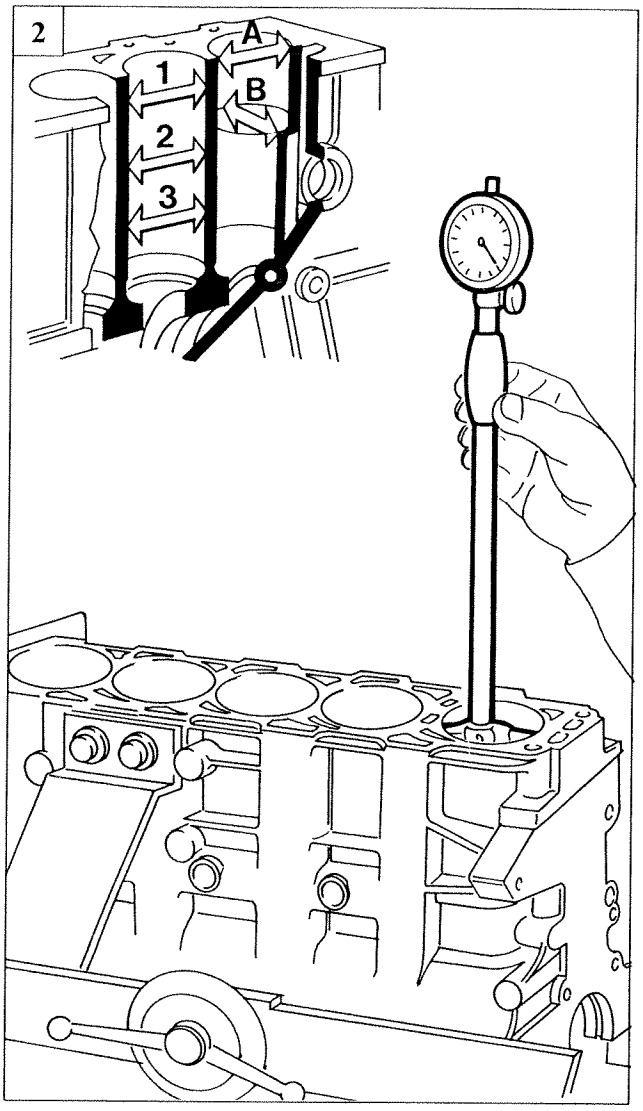

PK012L702

1. Remove oil sprays for piston cooling.

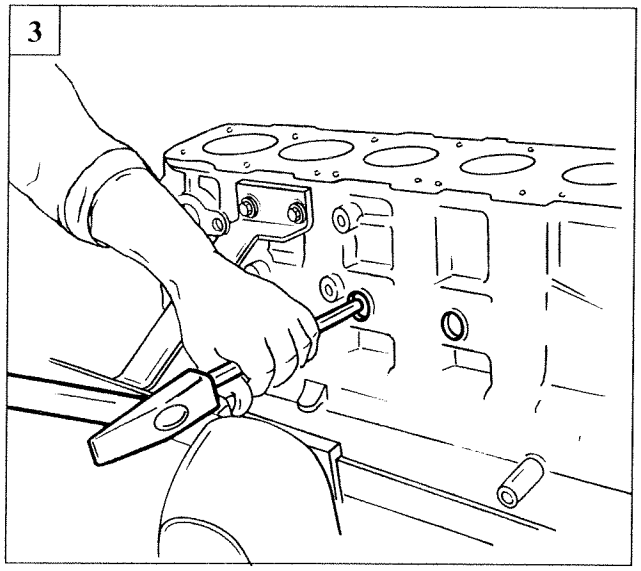

PK012L703

CYLINDER LINERS AND ENGINE BLOCK

2. Measure maximum cylinder liner ovality, taper and wear. Cylinder liners are graded into 0.01 mm categories

   Maximum liner grinding tolerances are: taper 0.005 (difference between 1st and 3rd measurement); ovality 0.05 (difference between A and B); all liners must be reground to the same oversize.

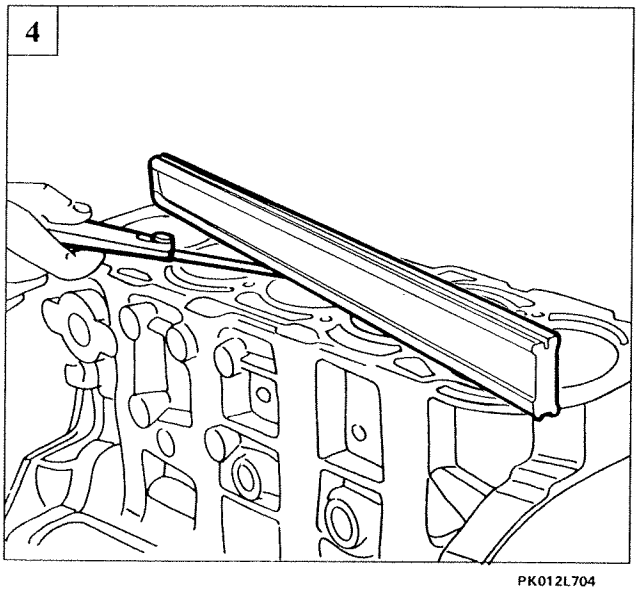

PK012L704

3. If necessary, remove cooling chamber plugs from engine block. Before fitting plugs, spread with LOCTITE 270 sealant.

4. Check cylinder heat mating surface using a straight edge and feeler gauge.

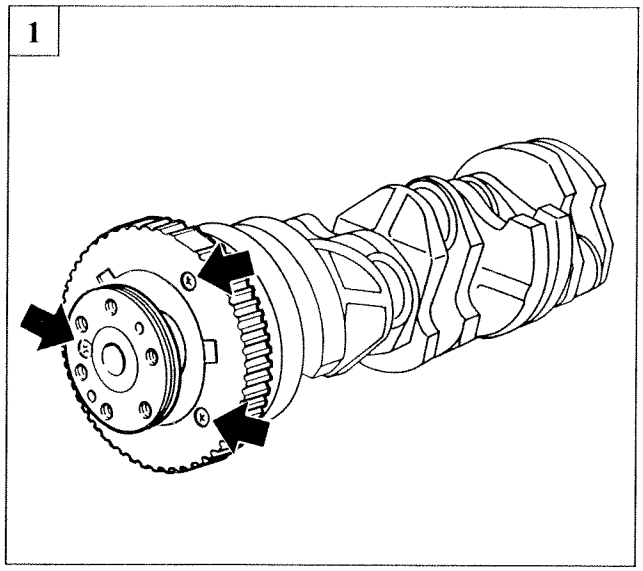

PW011L601

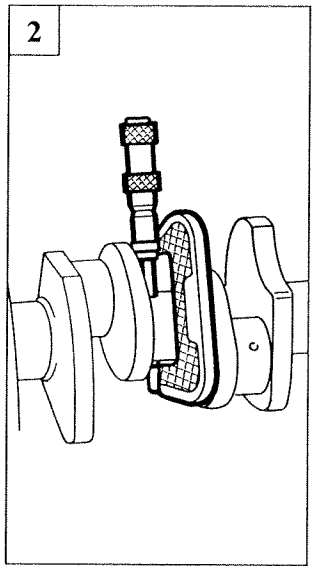

PK013L702

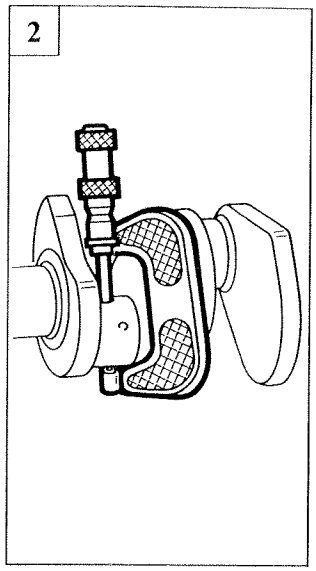

PK013L703

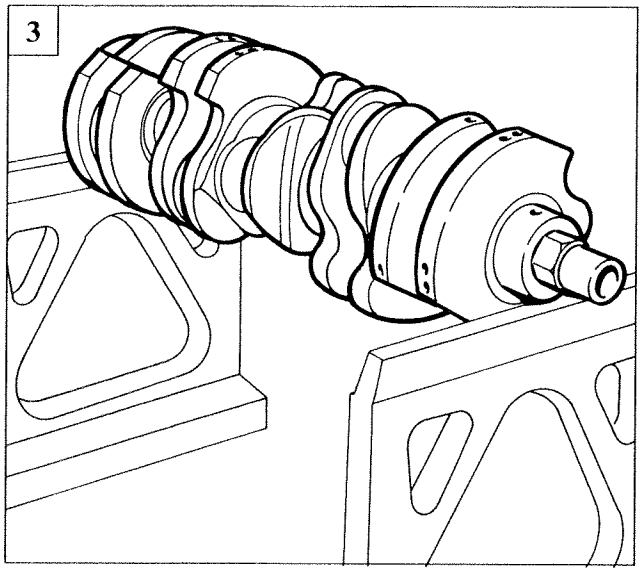

PK013L704

CRANKSHAFT

1. Remove phonic wheel for rpm and TDC sensor from crankshaft by undoing retaining screws.

2. Measure main journals and crank pins.

NOTE *During operations that involve grinding of main journals and crankpins, subject shaft to nitriding treatment after grinding to prevent breakage during operation. Consult a specialised workshop to carry out the treatment.*

3. Check static shaft balance by resting main journals on appropriate parallel blocks.

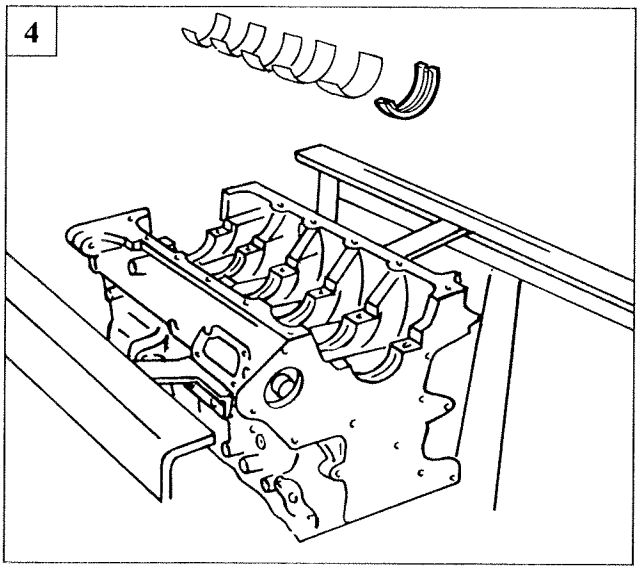

PK013L705

4. Check main bearings, noting that bearing halves should not be ground. Replace if signs of scoring or binding are noted. Keep absolutely clean during assembly.

Copyright Fiat Auto

10.

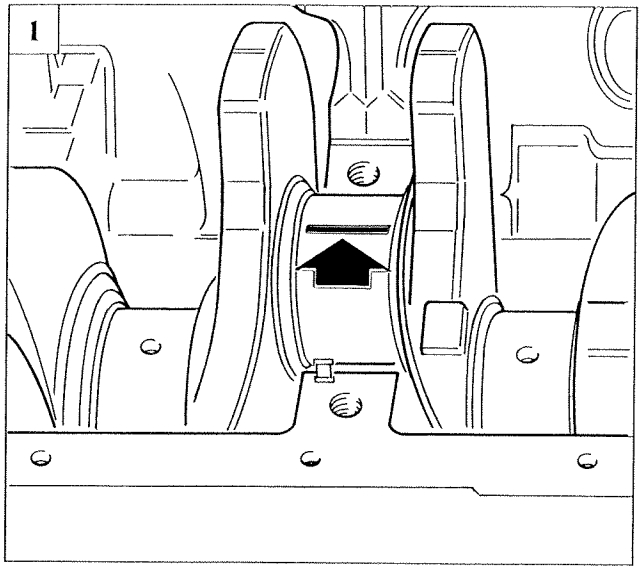

PW014L701 PW014L702

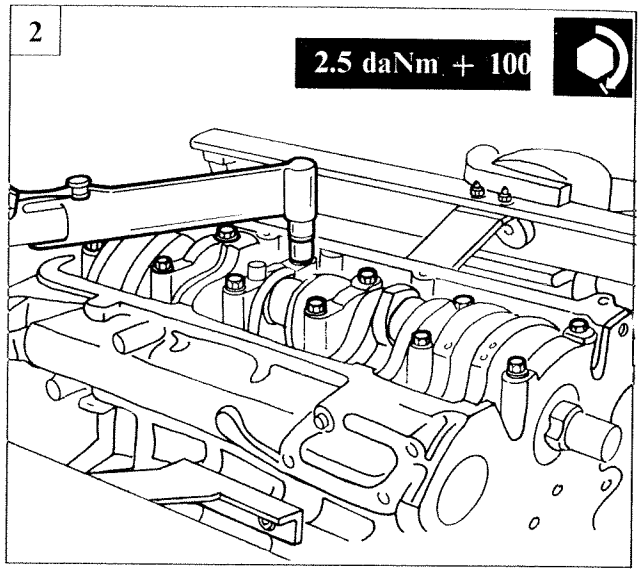

PK014L703

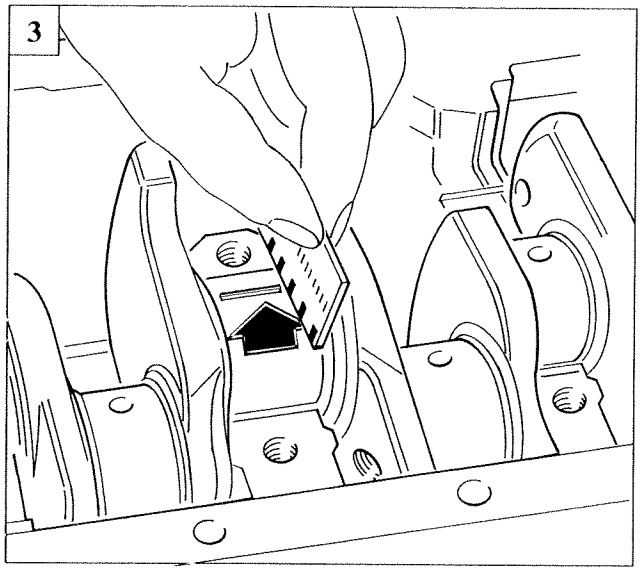

PW012L604 PW012L605

1. Apply calibrated wire (Plastigage) to measure main journal backlash.

NOTE *Check one journal at a time without moving crankshaft*

2. Fit main bearings and tighten bolts to specified torque.
3. Remove main bearing caps and measure journal backlash using an appropriate gauge.
4. Fit thrust half-rings to central crankshaft bearing as shown in figure. Tighten main journal cap bolts to torque.
5. Measure crankshaft end float.

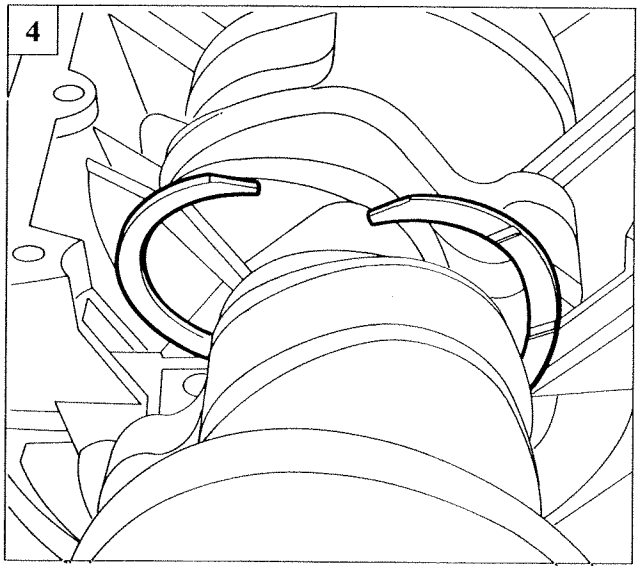

PK014L706

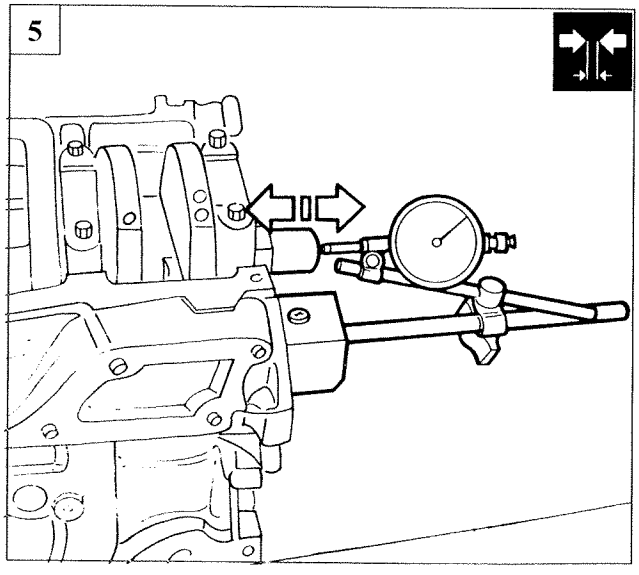

PK014L707

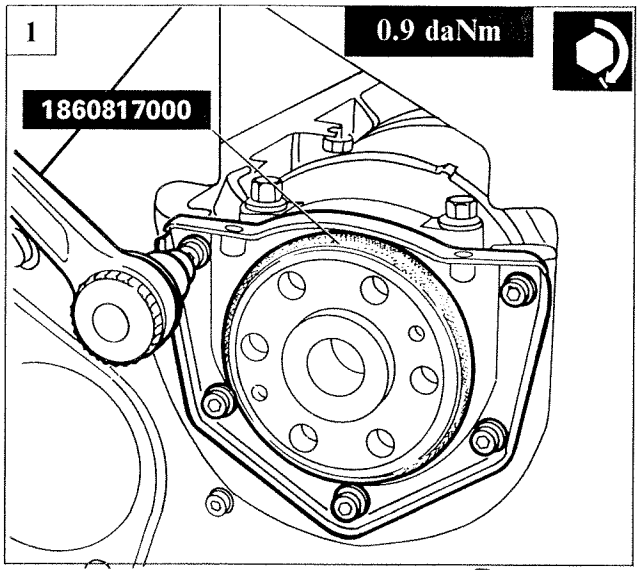

PW013L601

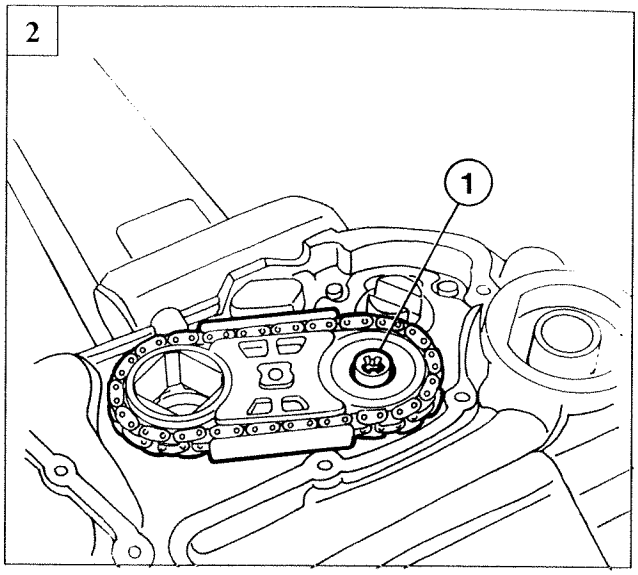

PW013L602

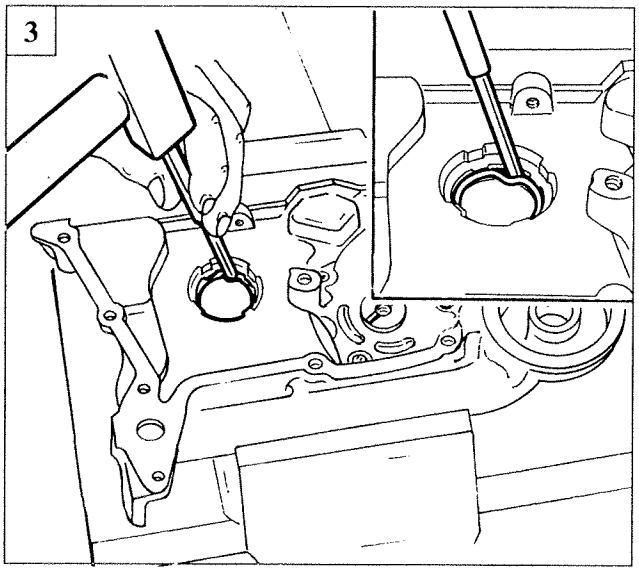

PW013L603

1. Fit rear crankshaft cover together with gasket, using locating tool and then tighten retaining bolts to specified torque.

OIL PUMP

2. Unscrew left-hand thread bolt (1) retaining chain drive pinion to oil pump drive gear. Then remove chain-pinion assembly.
3. Remove gasket.
4. Remove oil pump cover by undoing bolts indicated.
5. Remove limit valve.

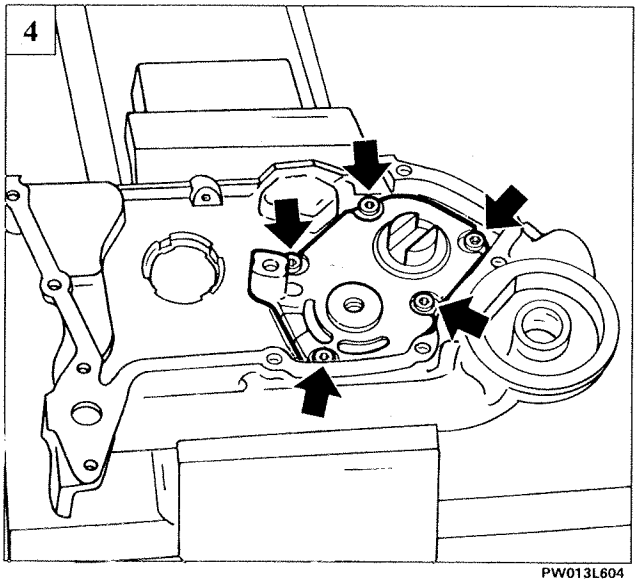

PW013L604

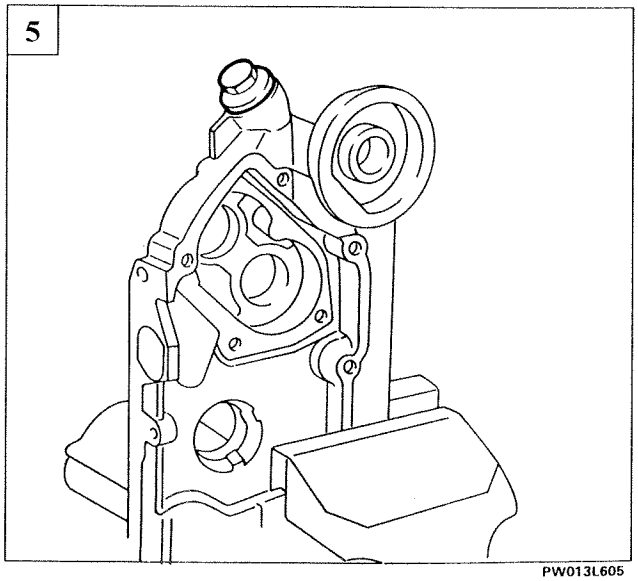

PW013L605

Copyright Fiat Auto

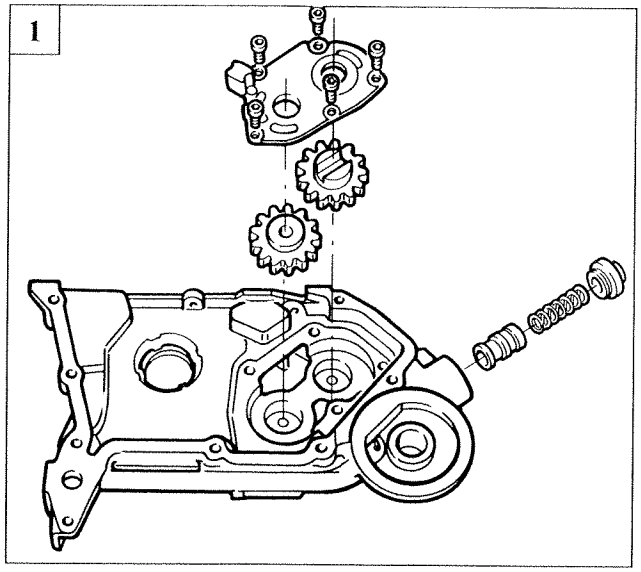

PW014L601

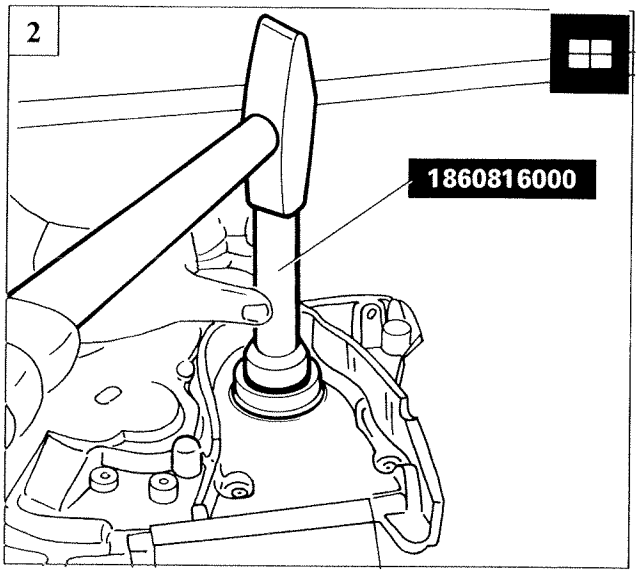

PW014L602

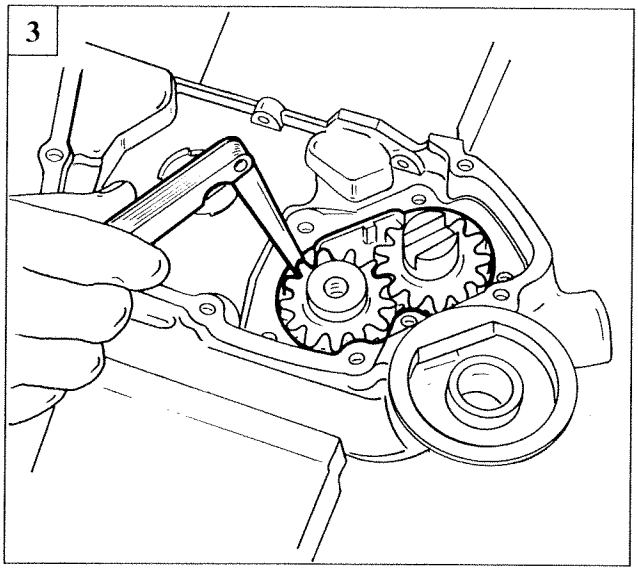

PW014L603

1. Exploded view of oil pump assembly components.

The following components of the front cover with integral oil pump are available as spares: chain-pinion assembly, limit valve and gasket.

2. Fit gasket using tool shown.
3. Checking radial clearance between pump case seat and driven gear.
4. Checking axial clearance between cover mating surface and pump gear surfaces.

NOTE *If clearances found during two checks are not as specified, replace cover with integral oil pump*

5. Fit pump cover by tightening retaining bolts to the specified torque, and then position the tool shown to adjust driven gear timing in relation to the counter-rotating shaft.

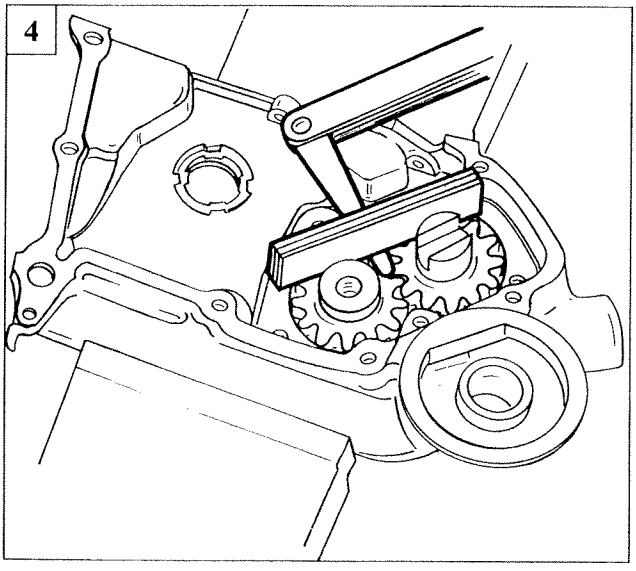

PW014L604

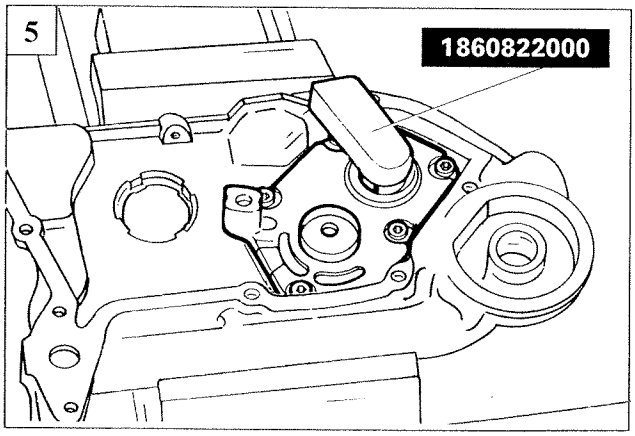

PW014L605

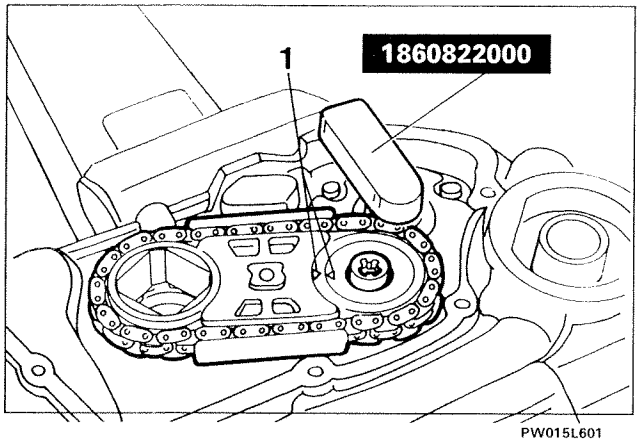

1. Position the chain assembly on the drive gear, aligning references (1). Then tighten assembly retaining screw to the specified torque.

Oil pump operation

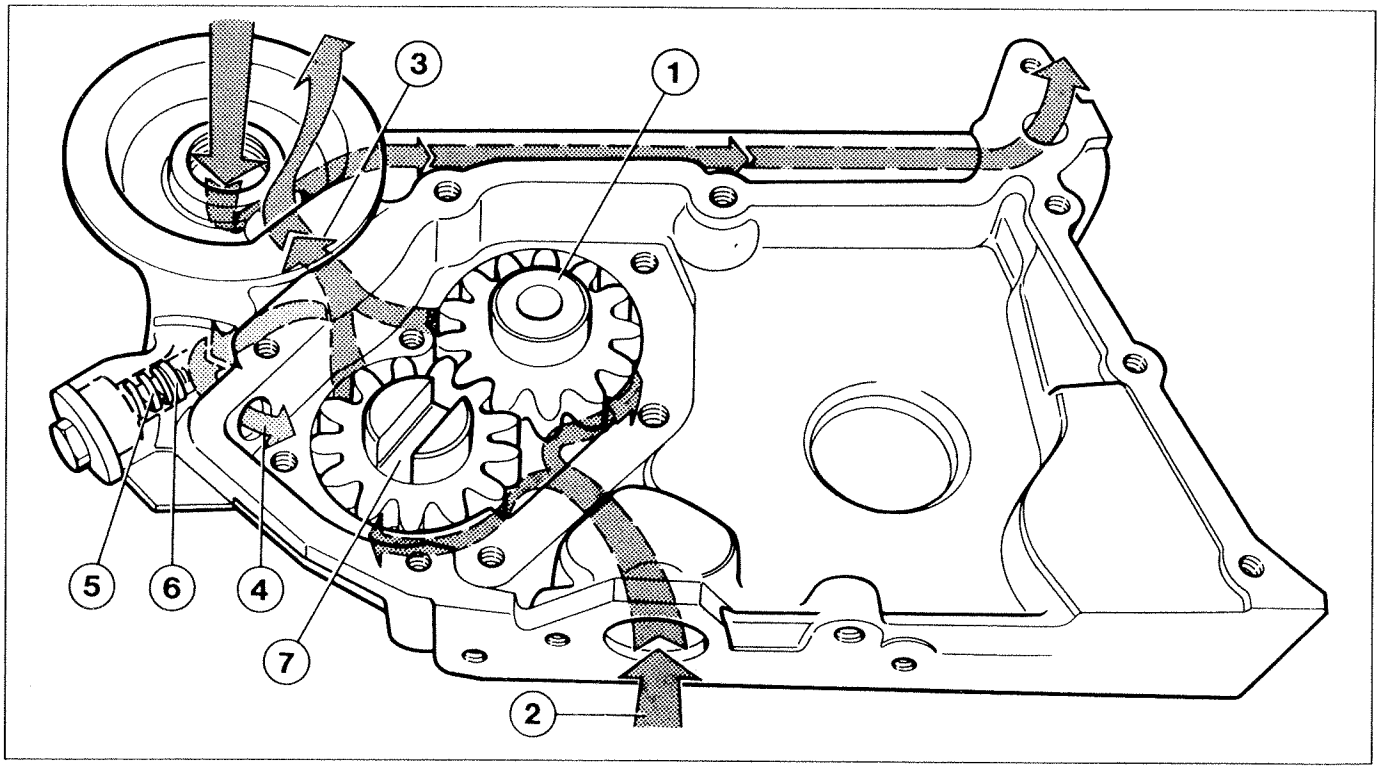

The gear-driven oil pump is driven by the crankshaft through a silent chain.

Oil is taken up through hole (2) connected to suction head and then forced through opening (3) to oil filter by the rotation of gears (1-7).

The pump case houses a pressure relief valve that limits oil pressure inside the lubrication circuit to maintain it at a set value. The pressure relief valve cuts in when oil pressure downstream of the pump, acting on valve (6), exceeds setting level of spring (5) to allow part of the pumped oil to return to the sump through opening (4).

The balance shaft is fitted to a seat on driven gear (7). Because balance shaft timing must be offset in relation to the crankshaft, the two oil pump gears must be offset in relation to one another as indicated previously.

Copyright Fiat Auto

1

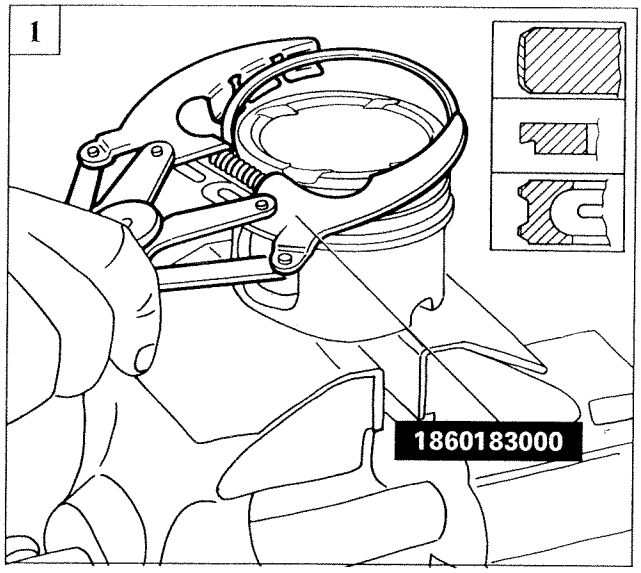

PW016L601

2

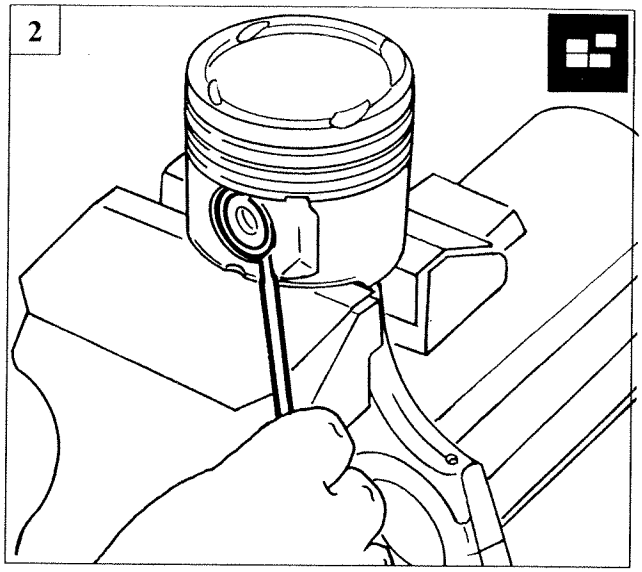

PW016L602

3

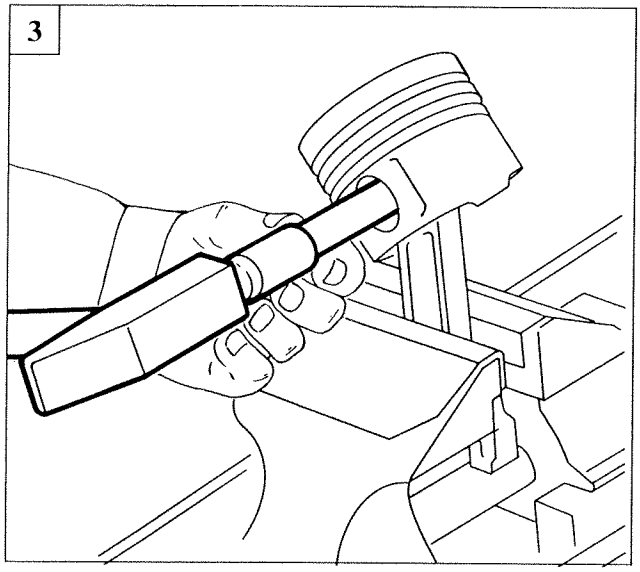

PK018L703

CONNECTING ROD- PISTON ASSEMBLY

1. Remove piston rings.

NOTE *Clean carbon residues off piston crown using a scraper*

2. Remove piston pin retaining rings.
3. Remove piston pin using drift.

PISTONS

4. Measure piston diameter.

NOTE *The arrows indicate areas from which excess material can be removed in order to achieve weight matching*

5. Check specified weight tolerance.

4

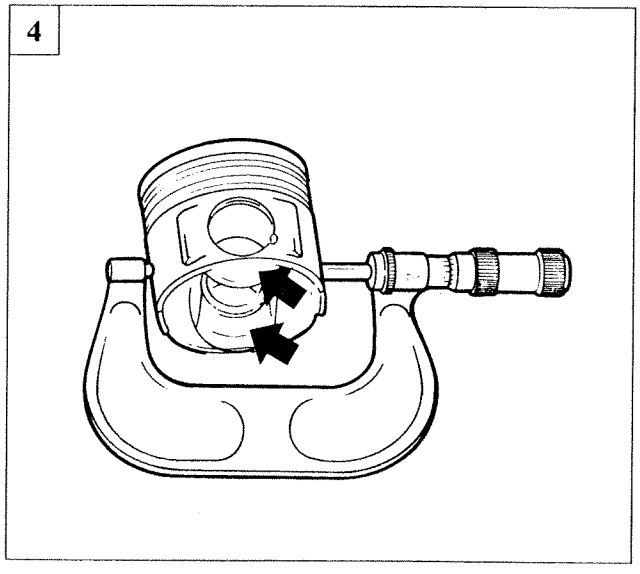

PK018L704

5

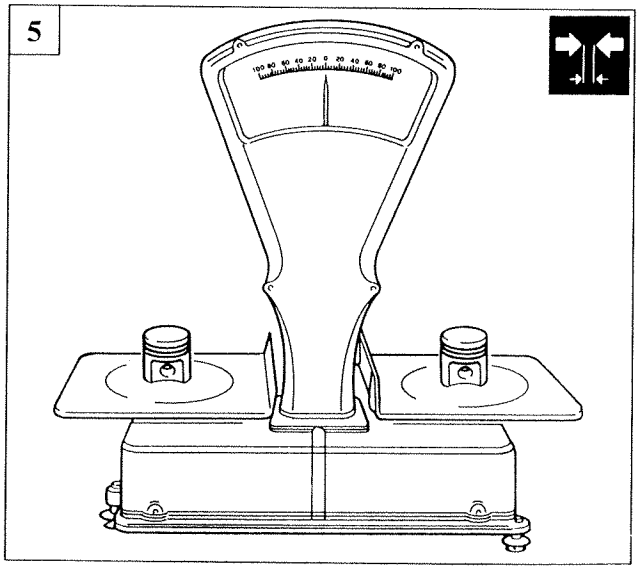

PK018L705

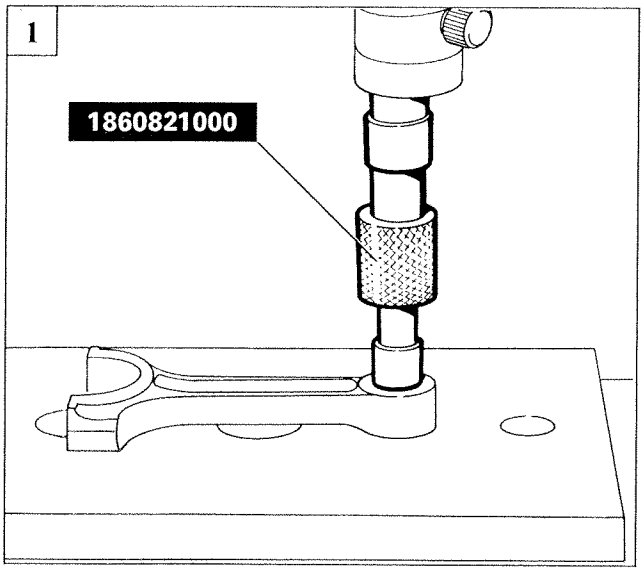

PW019L601

1. Remove small end bush on press using tool shown.

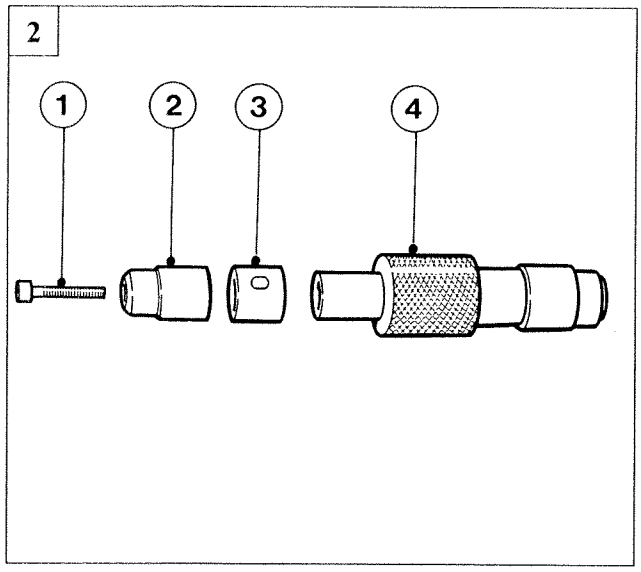

PW019L602

2. The tool in question may be used to remove bushes from connecting rod small end.

When dismantling, it is used as an ordinary drift (end with smaller diameter). The bush slides out when force is exercised on the tool by the press.

To replace bush, unscrew screw (1), dismantle tool, remove part (2), fit bush (3) in case of tool (4), then reassemble tool and replace bush.

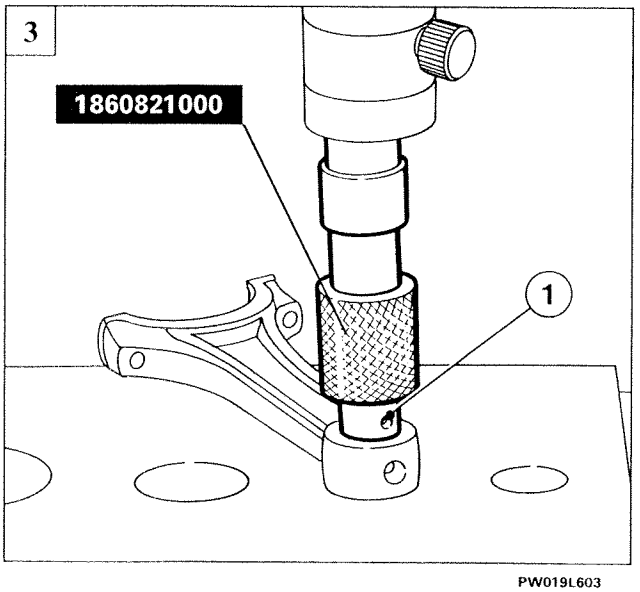

PW019L603

3. Fit bush into small end using a press and the tool described previously. Take care to align lubrication hole in bush (1) with hole in small end.

Once operation is complete, unscrew screw (1) and remove part (2) mentioned in previous illustration in order to remove tool.

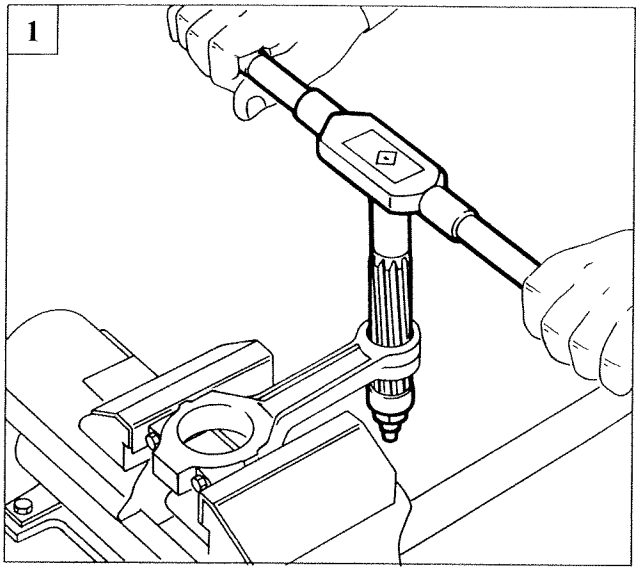

PK022L701

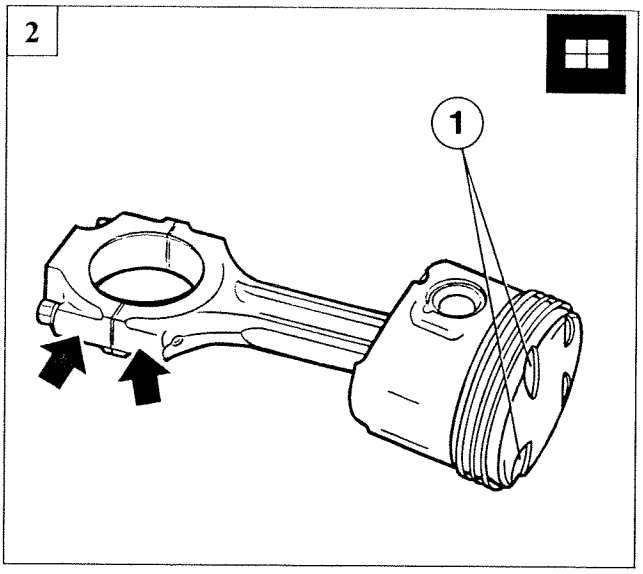

PW020L601

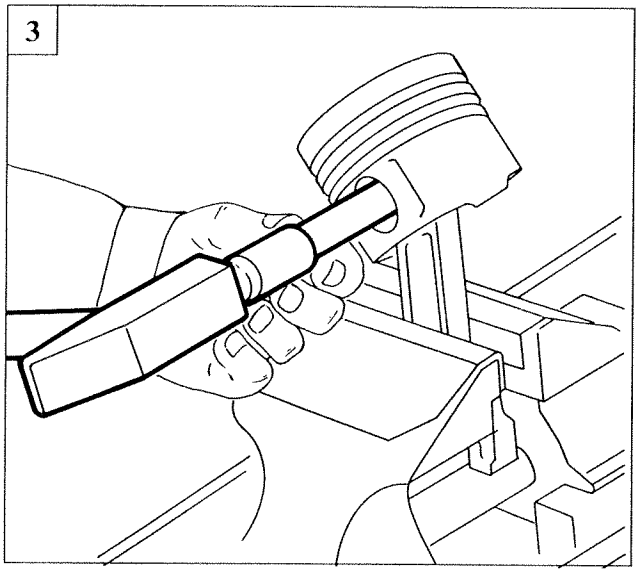

PK018L703

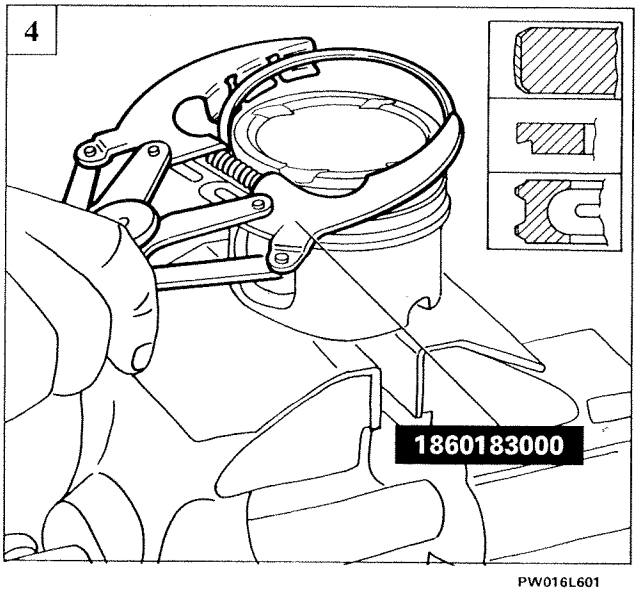

PW016L601

1. Grind bush press-fitted in small end.

ASSEMBLING CONNECTING ROD- PISTON ASSEMBLY

2. Diagram showing connecting rod- piston assembly

Assemble connecting rod- piston by positioning piston with crown grooves (1) turned toward numbers stamped on connecting rod

3. Fit pin into connecting rod- piston assembly and secure using retaining rings.

4. Fit piston rings using tool shown, (fit 2nd ring with wording TOP turned upward). Once installation is complete, turn ring ends so that they do not coincide with the pin centre line and are offset 120° apart.

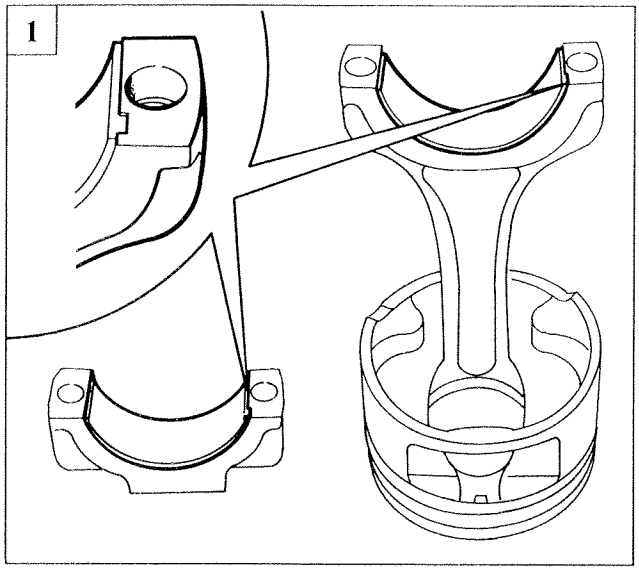

PW021L601

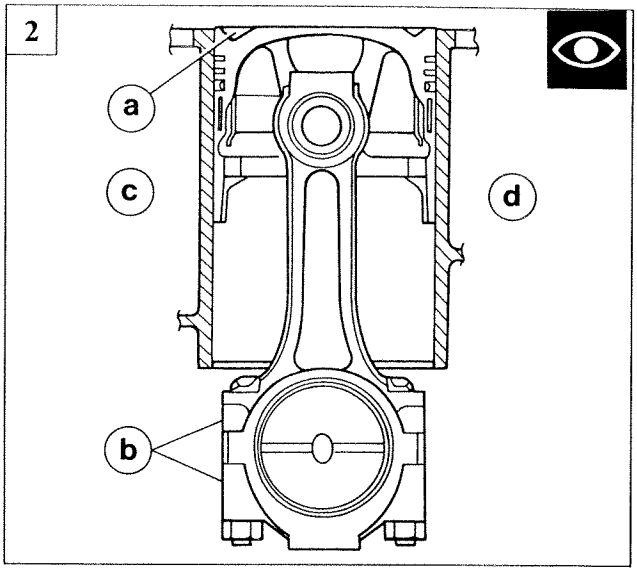

PW021L602

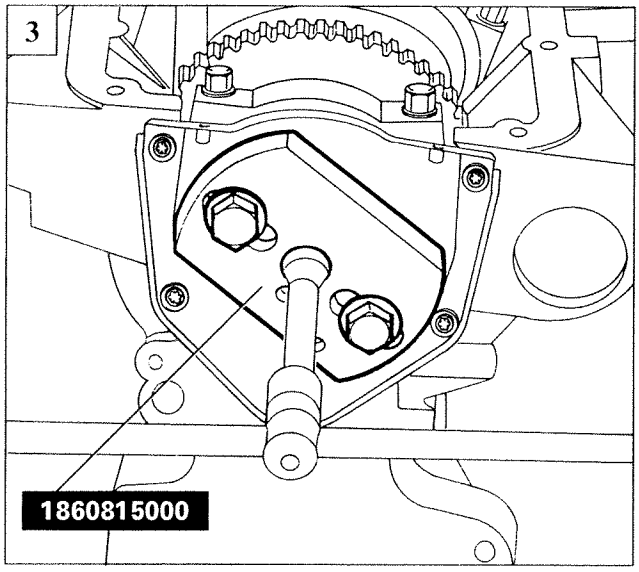

PW021L605

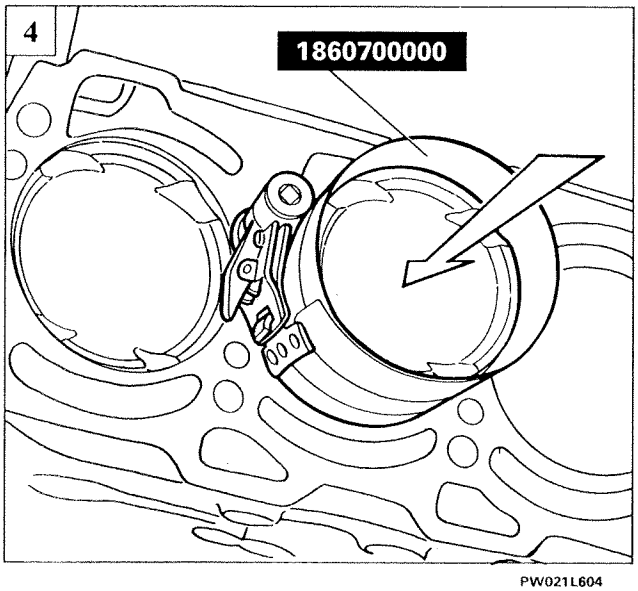

PW021L604

CONNECTING ROD BEARING HALVES

1. New connecting rod bearing halves are supplied undersized on inner diameter.

Do not attempt to adapt bearing halves. Replace if traces of scoring or binding are found.

2. Diagram for correct installation of connecting rod - piston assembly in cylinder liner.
   a. Grooves of larger size on piston crown (intake end).
   b. Area showing stamped number of matching cylinder liner.
   c. Intake end.
   d. Exhaust end.
3. Fit special tool for turning crankshaft.
4. Fit connecting rod - piston assembly into cylinder liner using the special tool shown.

Parts involved in operation.

Copyright Fiat Auto

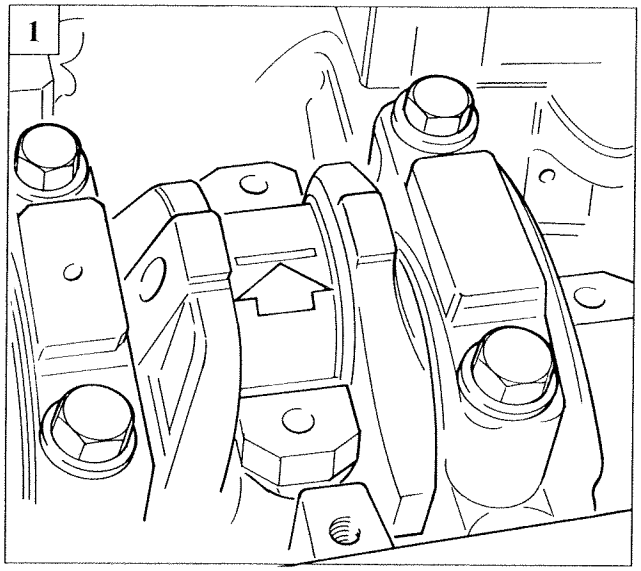

PW022L601

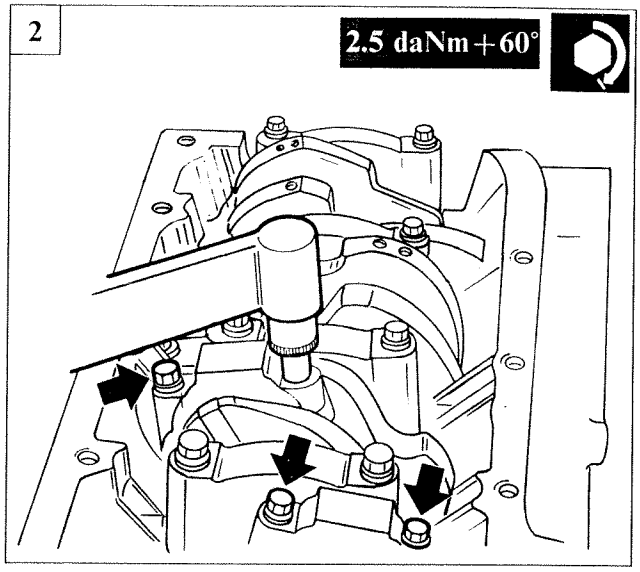

PW022L602

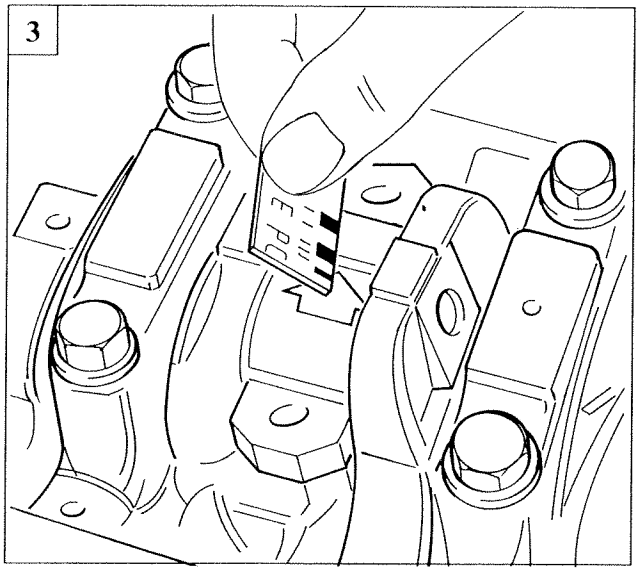

PW022L603

MEASURING CRANKPIN CLEARANCE

1. Apply calibrated wire (plastigage) to measure crankpin installation clearance.

NOTE *Check one pin at a time without turning crankshaft*

2. Tighten connecting rod caps to specified torque.
3. Measure clearance between crankpin and bearing using gauge, then tighten connecting rod caps to torque.
4. Turn crankshaft so that 1st piston moves to T.D.C. Then fit oil pump assembly to engine block. Then tighten bolts retaining oil pump to engine block to torque.
5. Check that both reference notches (1) are aligned, that seat (2) fits onto counter-rotating shaft and that seat (3) fits easily onto the crankshaft with cylinder 1 turned to TDC.

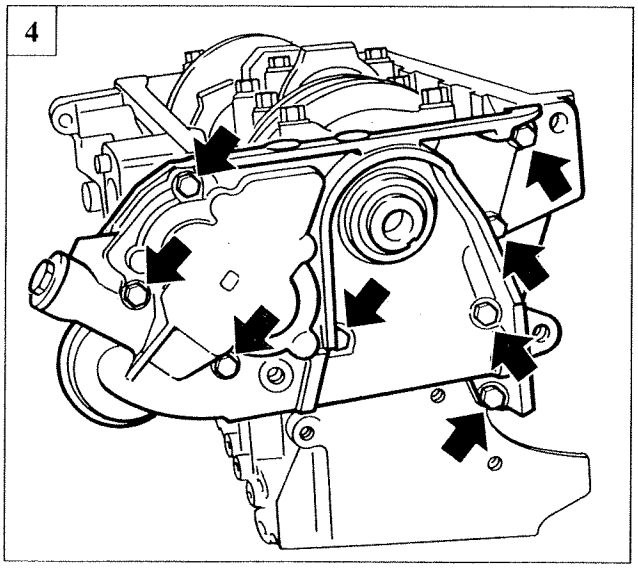

PW022L604

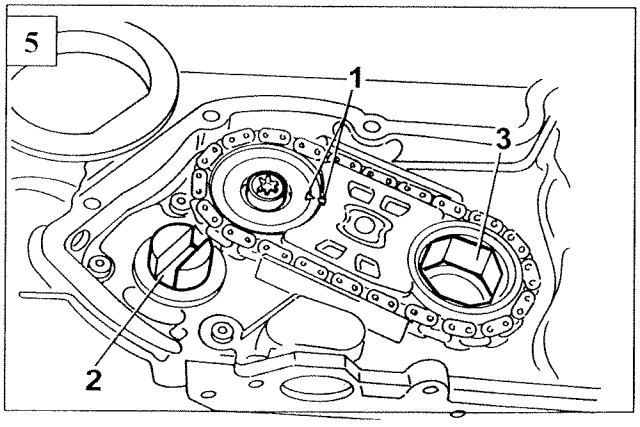

PW022L605

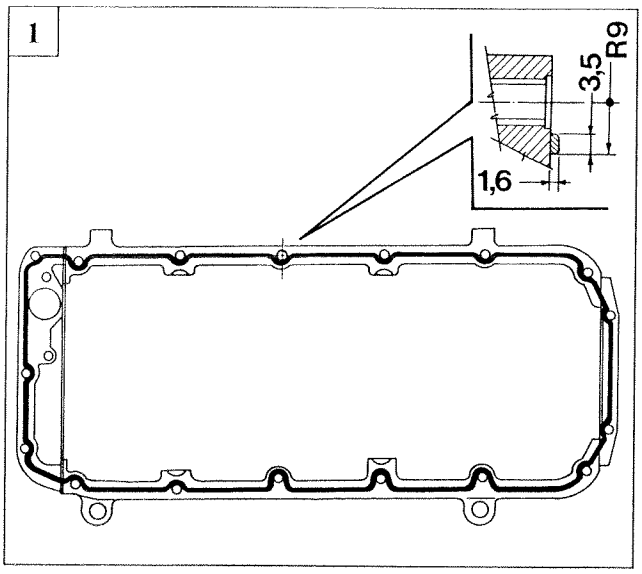

PK040L703

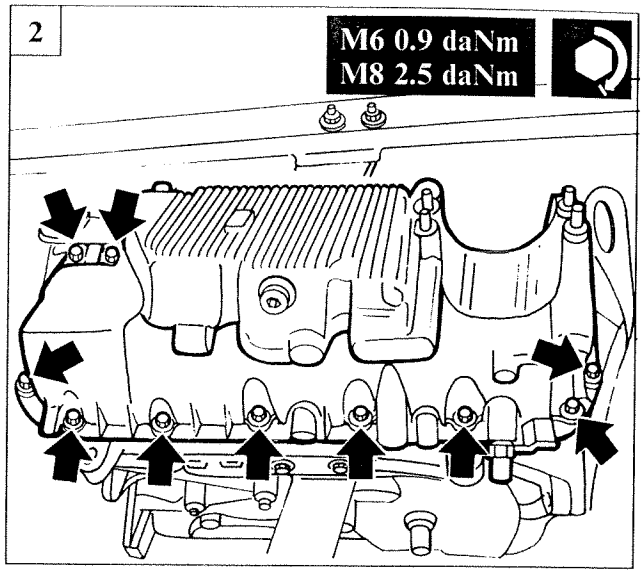

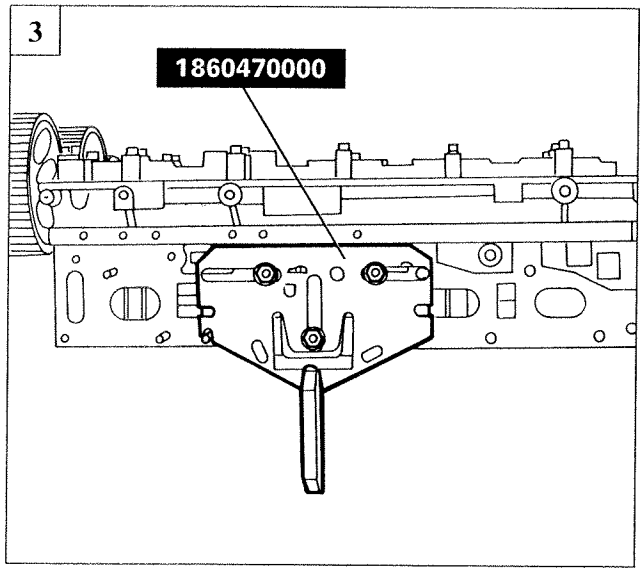

PW023L601

1. Spread silicone sealant over surfaces of oil sump in contact with engine block as shown in figure.

2. Fit oil suction head and oil sump before tightening bolts to specified torque using wrench 1860834000.

DISASSEMBLY AND CHECKS

3. Position tool for holding cylinder head in vice.

4. Remove spark plugs.

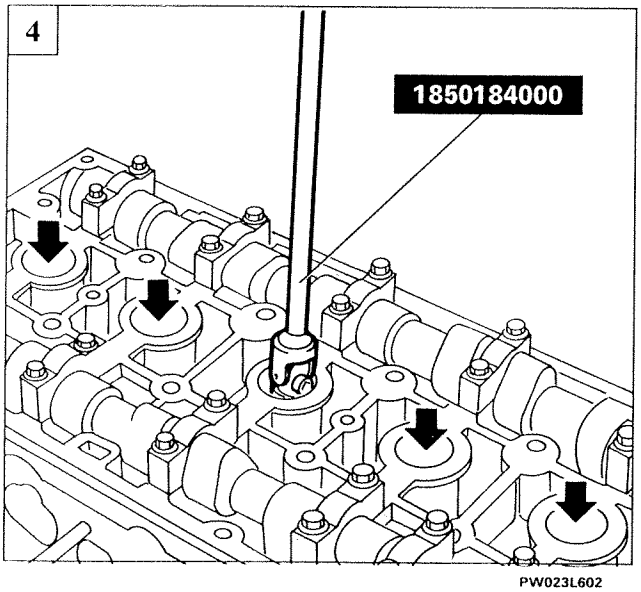

PW023L602

1998 20V 2446 20V

10.

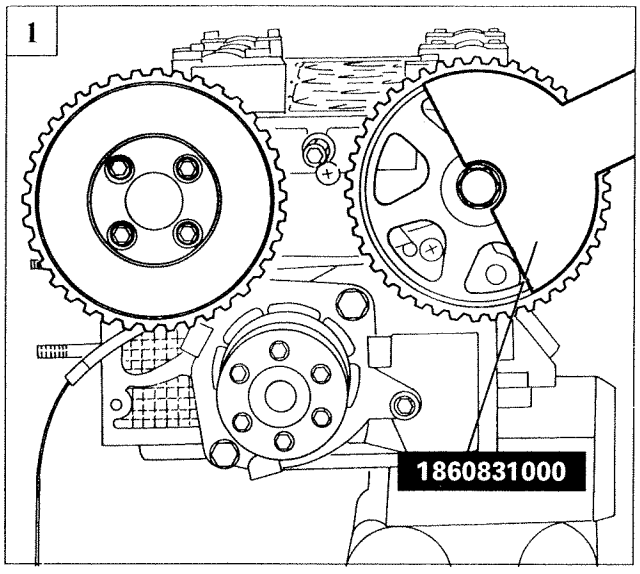

PW024L601

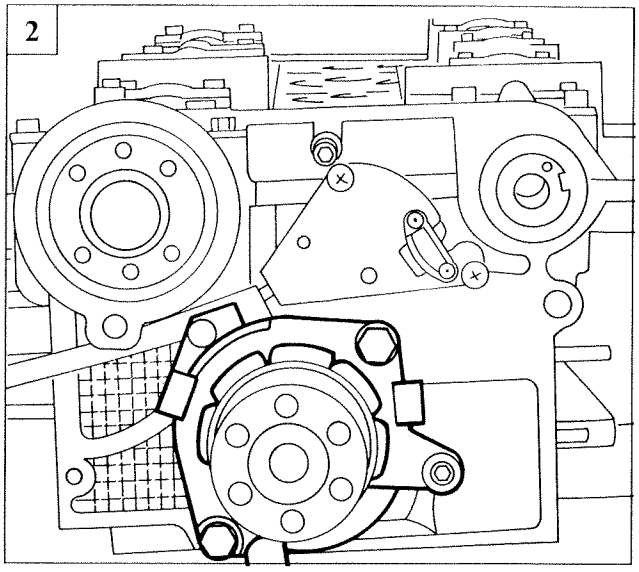

PW024L602

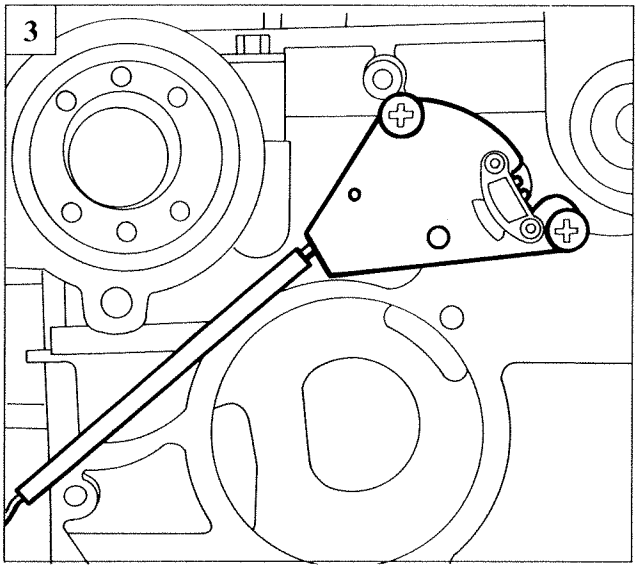

PW024L603

1. Remove camshaft drive pulleys using reaction wrench 1860831000 shown in the figure for the exhaust side camshaft pulley.
2. Remove coolant pump.
3. Remove timing sensor.
4. Remove caps and take out camshafts.

Note the position of the caps before removing in order to refit correctly: the caps may not be numbered and are not interchangeable.

5. Remove hydraulic tappets using a magnet.

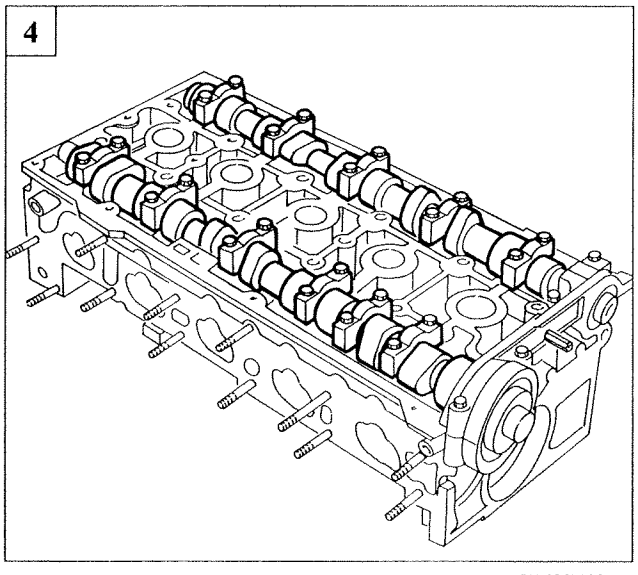

PW024L604

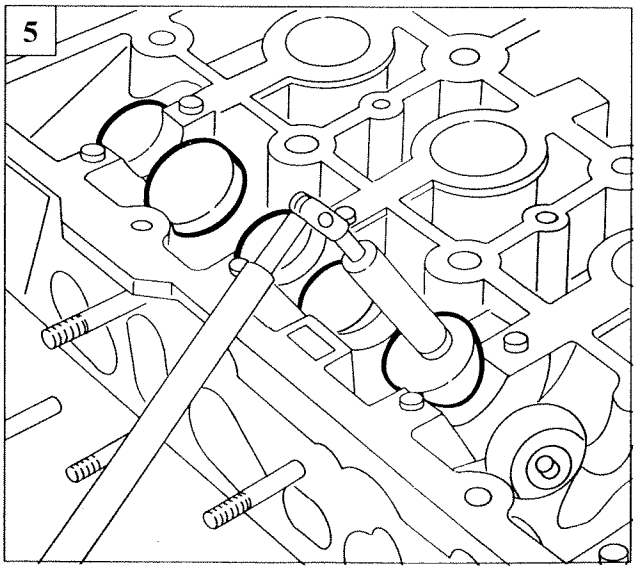

PW024L605

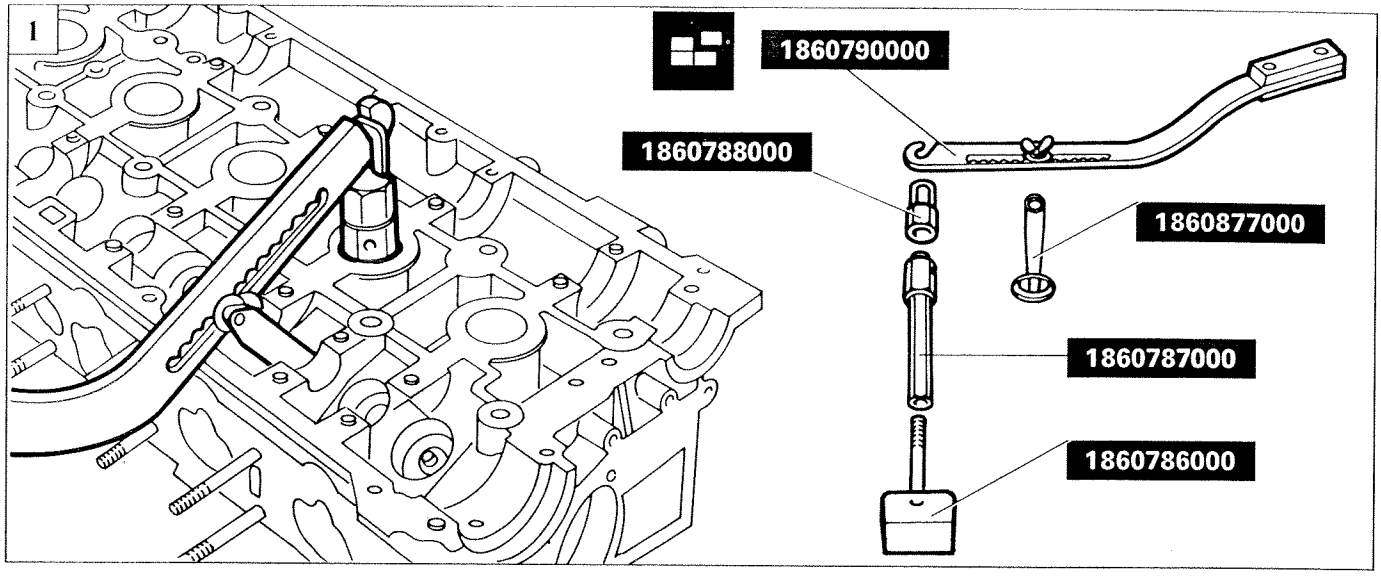

PW025L601

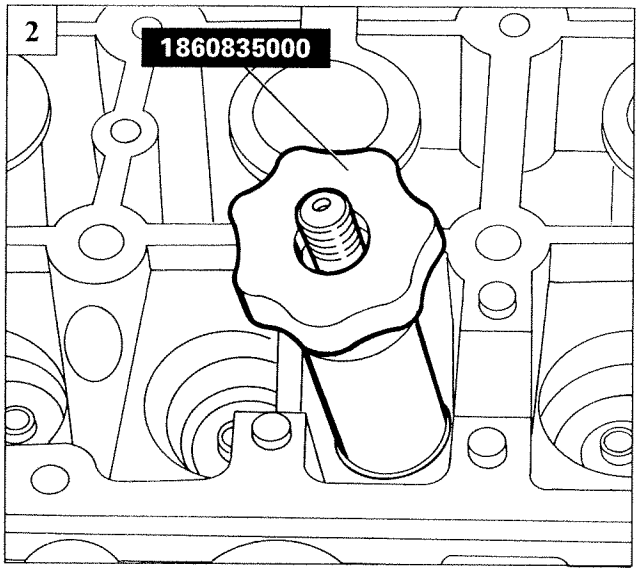

PW025L602

1. Use tools shown in figure to compress valve springs, then withdraw half-cones, cups, springs and valves.

2. Remove oil sealing rings using tool shown.

3. Remove deposits and clean valve seats and ducts.

4. Zero tool on reference surface and check cylinder head height prior to levelling.

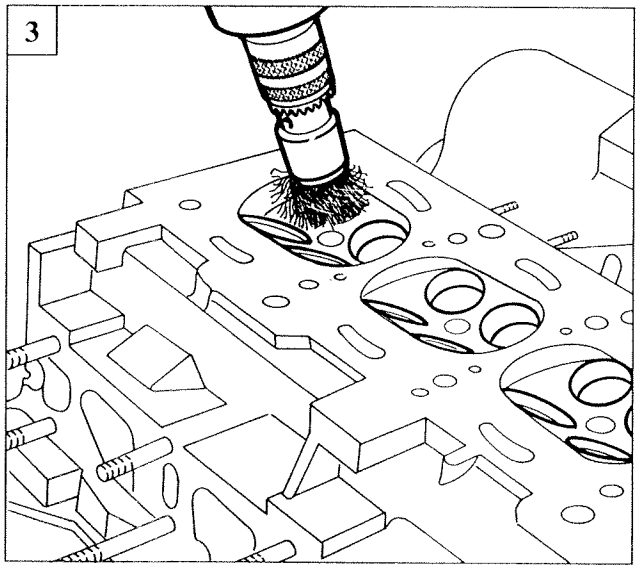

PW025L603

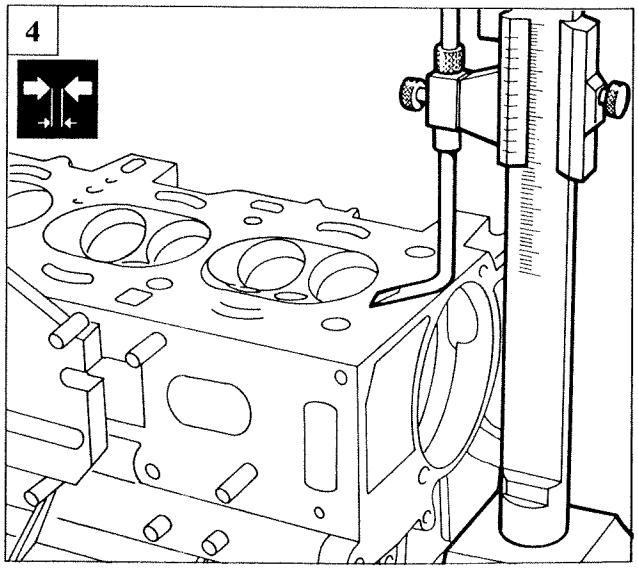

PW025L604

Copyright Fiat Auto

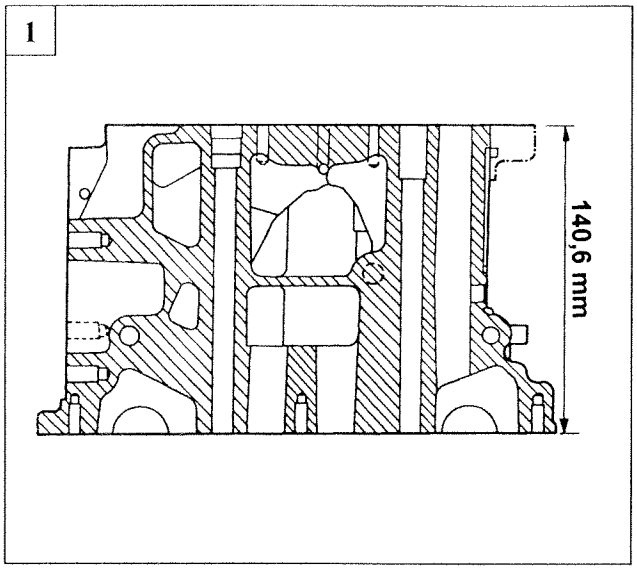

PW026L604

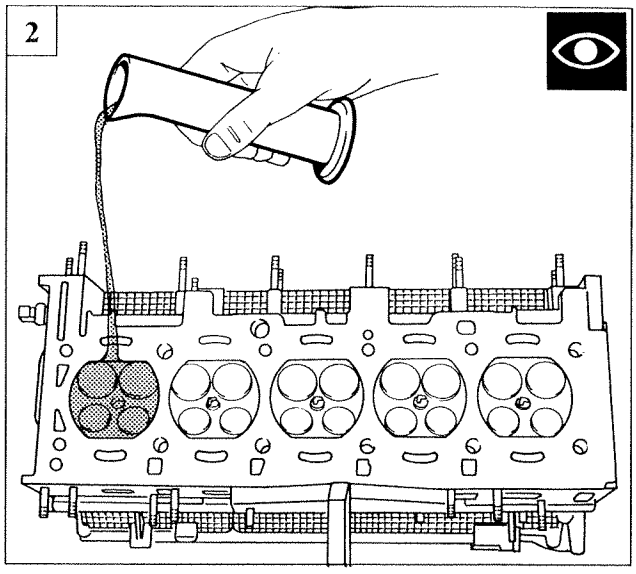

PW026L602

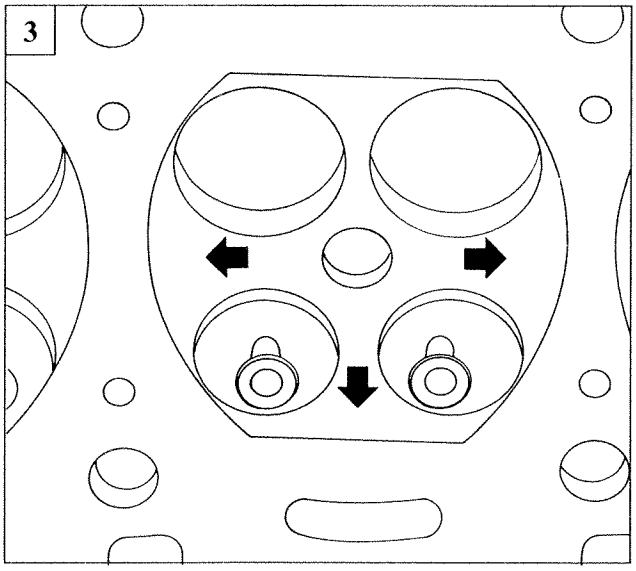

PW026L603

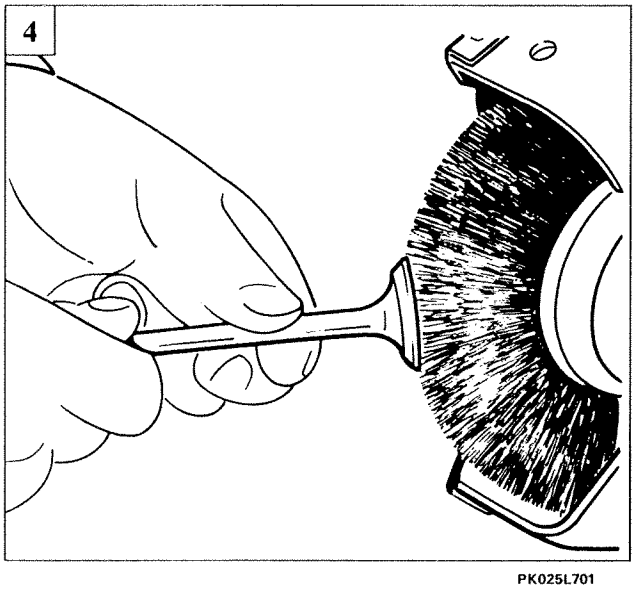

PK025L701

1. Level cylinder head by removing material to restore flatness of engine block mating surfaces. Cylinder head height should not fall below 140.6 mm.

NOTE *After levelling, check height again to ensure recorded value is within specified range.*

2. After levelling cylinder head, check combustion chamber volume after fitting valves and spark plugs temporarily.

   Fill a burette with engine oil and record amount added, then leave oil to rest in burette for about 10 minutes.

   After filling combustion chamber, leave oil to rest in burette for about 10 minutes. Measure amount of oil remaining. The difference between burette contents before and after filling the chamber corresponds to actual chamber volume.

3. If recorded result is less than specified, adjust by removing material from inside combustion chamber at points indicated by arrows.

VALVES

4. Clean deposits off valves and check that stem is not scored. Check that stem diameter is within specified range.

1

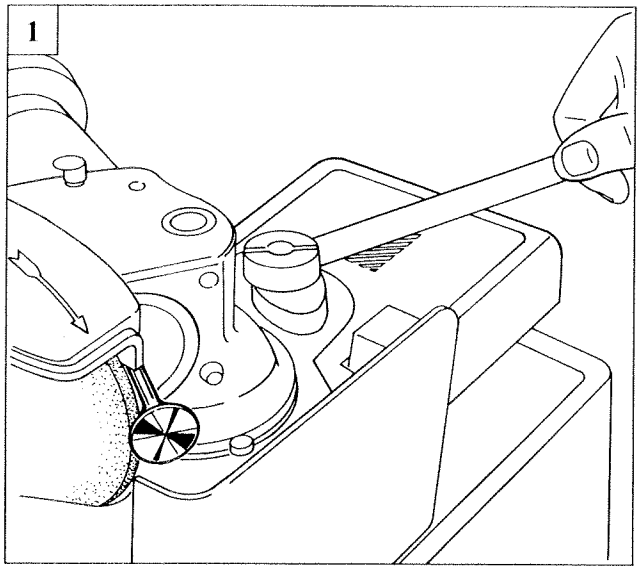

PK025L702

2

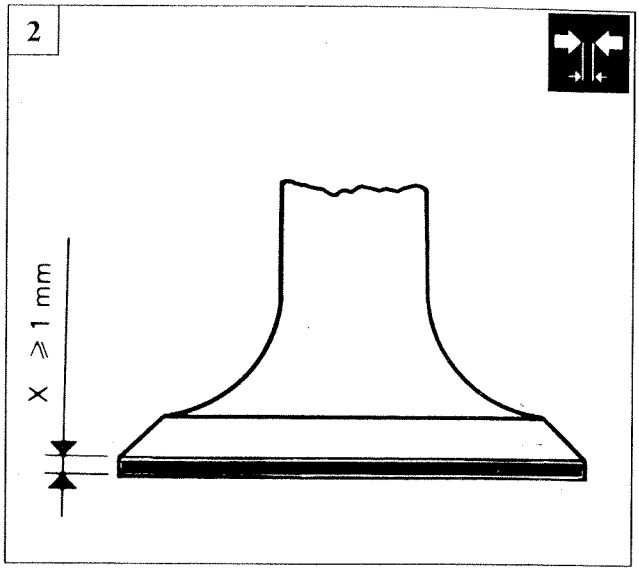

PK025L703 PK025L705

3

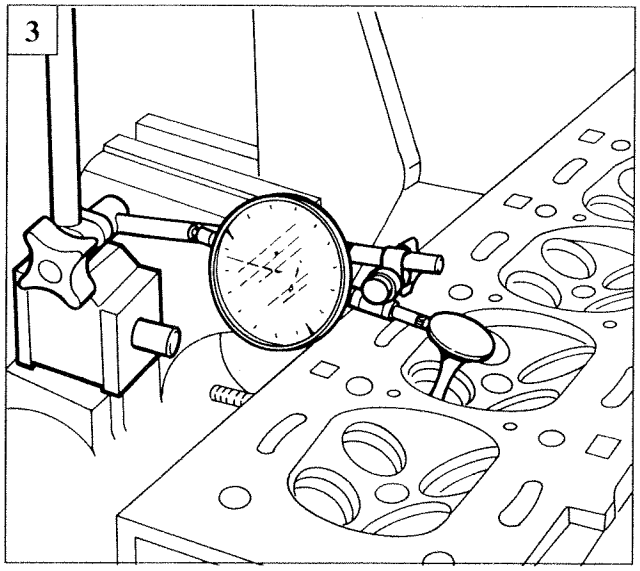

PW027L601

1. Grind valves using a grinding wheel if necessary, setting an angle of 45°30' on graduated sector. Grind valve seat removing as little material as possible. If top end of valve shows signs of notching, straighten using a grinding wheel removing as little material as possible.

2. After grinding, check that thickness (X) of valve at point indicated is not less than 1 mm, otherwise replace.

3. Check clearance between valve stem and valve guide.

VALVE GUIDE

4

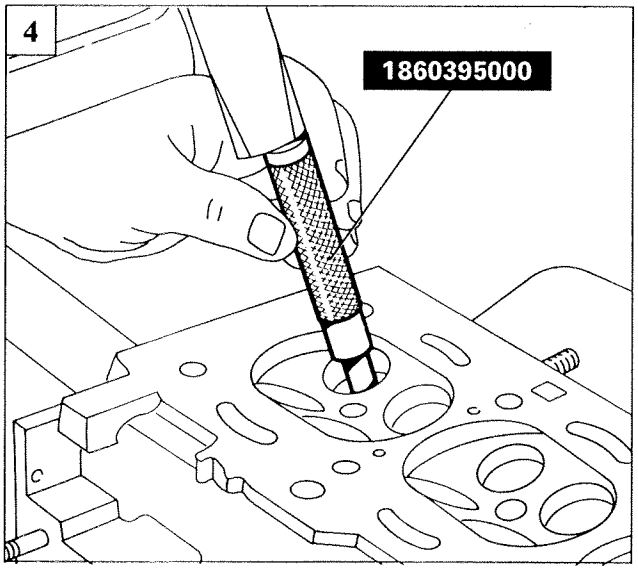

PW027L602

4. Remove valve guide using an appropriate drift.

Copyright Fiat Auto

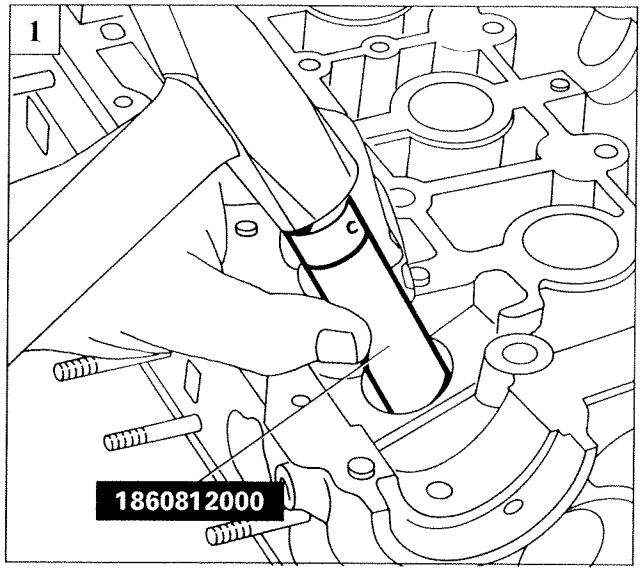

PW028L601

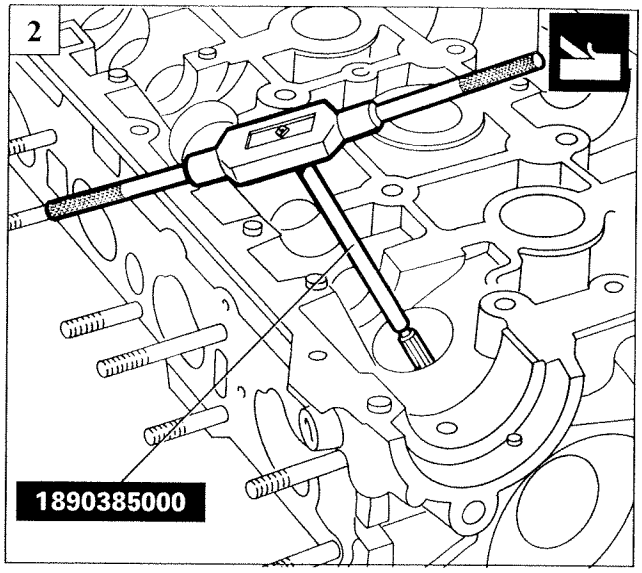

PW028L602

1. Fit valve guide using a specific drift.

NOTE *Before fitting new valve guides, heat cylinder head to a temperature of 80°-100° °C.*

2. Ream valve guide bore surfaces only in the case of slight deformation during press-fitting.
3. Grind valve seats on cylinder head whenever valves are ground or valve guides replaced.
4. Grinding valve seats with wheel set at 44°30'. Grinding top of valve seat with wheel at 20°. Grinding bottom of valve seat with wheel at 75°.

According to the cylinder head levelling value obtained, adjust the valve seats to maintain valve protrusion constant.

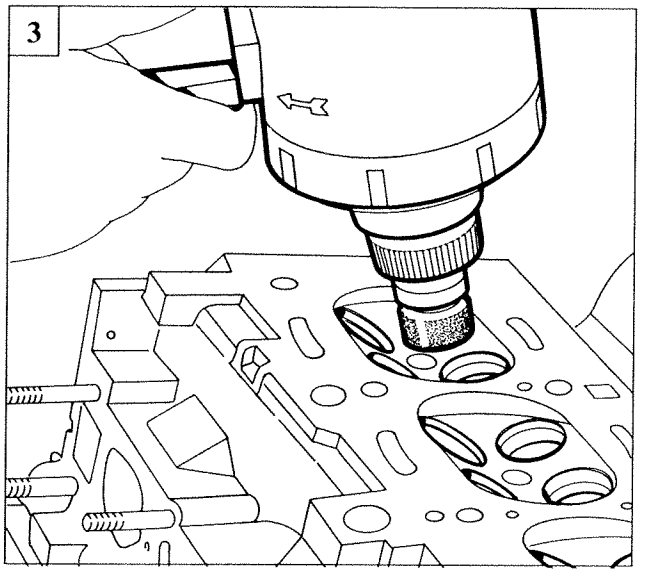

PW028L603

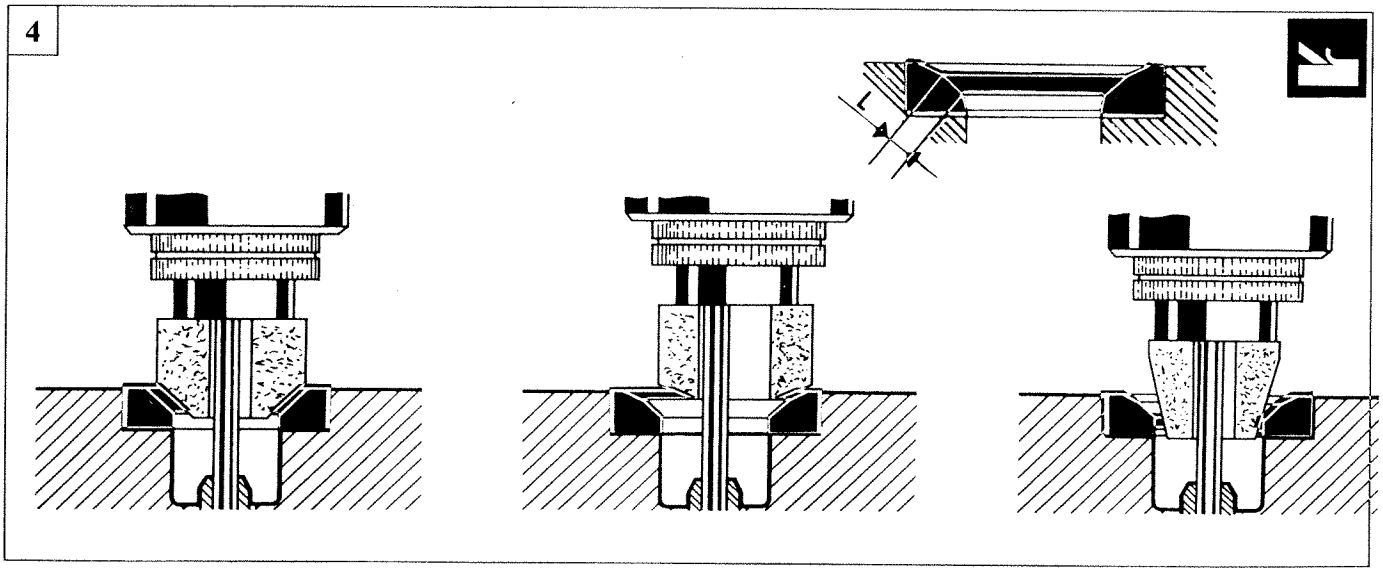

PK026L705 PK026L704

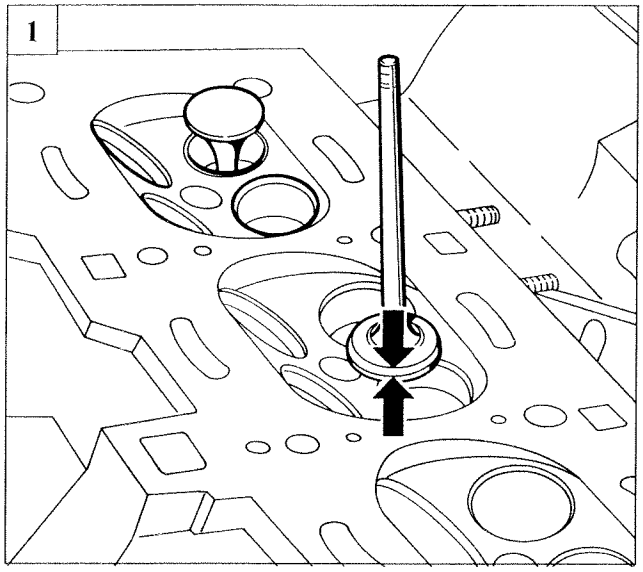

PW029L601

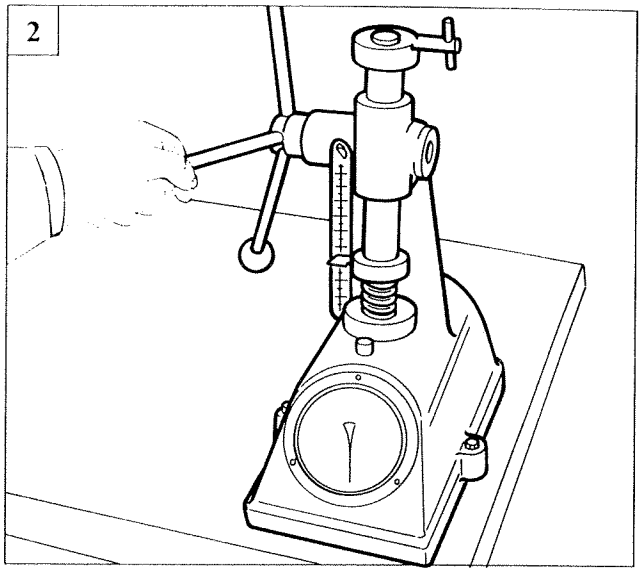

PK028L701

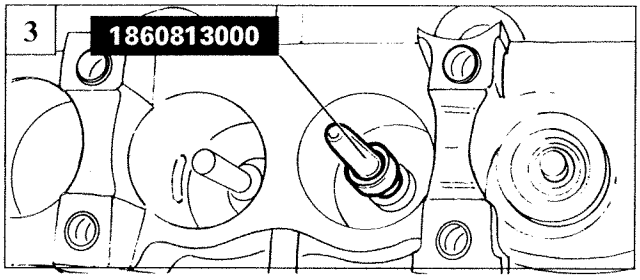

PK028L702

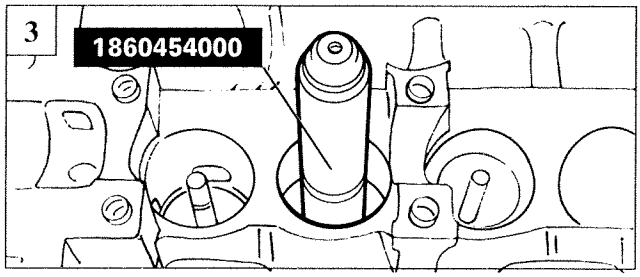

PK028L703

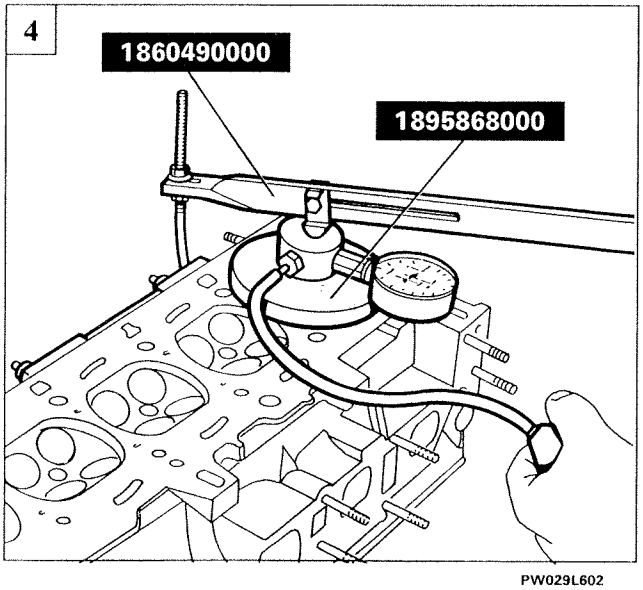

PW029L602

1. Inspect valve line of contact on valve stem seat. If contact is not centred, grind as described previously.

2. Check spring load in order to ensure that minimum load corresponds to specified value.

3. Fit oil rings onto inlet and exhaust valve guides. Arrange installer on valve stem and fit oil ring. Remove installer and use a drift to press-fit oil seal ring in its seat. Oil parts concerned prior to final assembly.

   Once operation is complete, refit valves, springs, cups and half-cones using the same equipment used for assembly.

4. Fit spark plugs provisionally and test valve seal under compression.

Copyright Fiat Auto

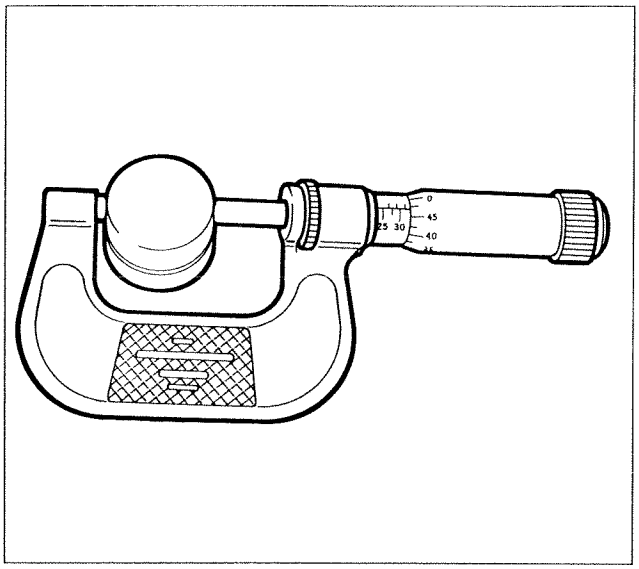

PW030L601

HYDRAULIC TAPPETS

Check tappet diameter. Replace tappets if ovality is found to be excessive.

Description and operation

Hydraulic tappets automatically take up valve play during engine operation.
This allows more noiseless operation (particularly important for multivalve engines) combined with the advantages of greatly simplified maintenance.
Valve play take-up ensures each valve begins to open at exactly the correct moment within each cycle.

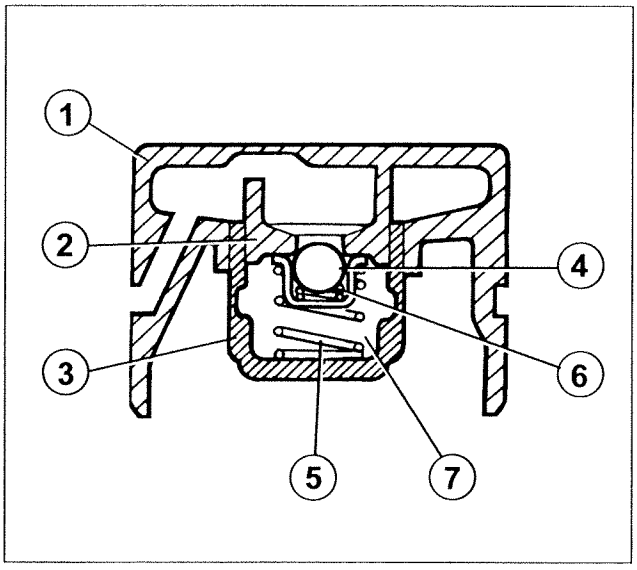

PW030L602

A hydraulic tappet is made up of the following main parts:

- Barrel (cup) (1)
- Plunger (2)
- Sleeve (3)
- Ball (4)
- Plunger spring (5)
- Ball valve spring (6)
- Chamber (7)

The device works on the principle that lubricant oil is an incompressible fluid. When a camshaft cam acts against cup (1) and hence plunger (2), oil trapped in chamber (7) (see detail A) therefore transmits movement of plunger (2) directly to sleeve (3) (due to closure of ball valve (4)) and consequently to valve in contact with sleeve.
During this stage, due to the great pressure exerted, a proportion of the oil in chamber (7) leaks through the small gap between plunger (2) and sleeve (3).

When the solenoid is disactivated, valve section (2) returns to its starting position to cut off the flow of oil under pressure to chamber (G), while allowing oil to return to the outlet due to pressure of counter spring (7).
A supplementary channel ensures lubrication of camshaft journal even when the device is not active.
Oil leaks through to chamber (H) of exhaust solenoid through drainage duct (E).

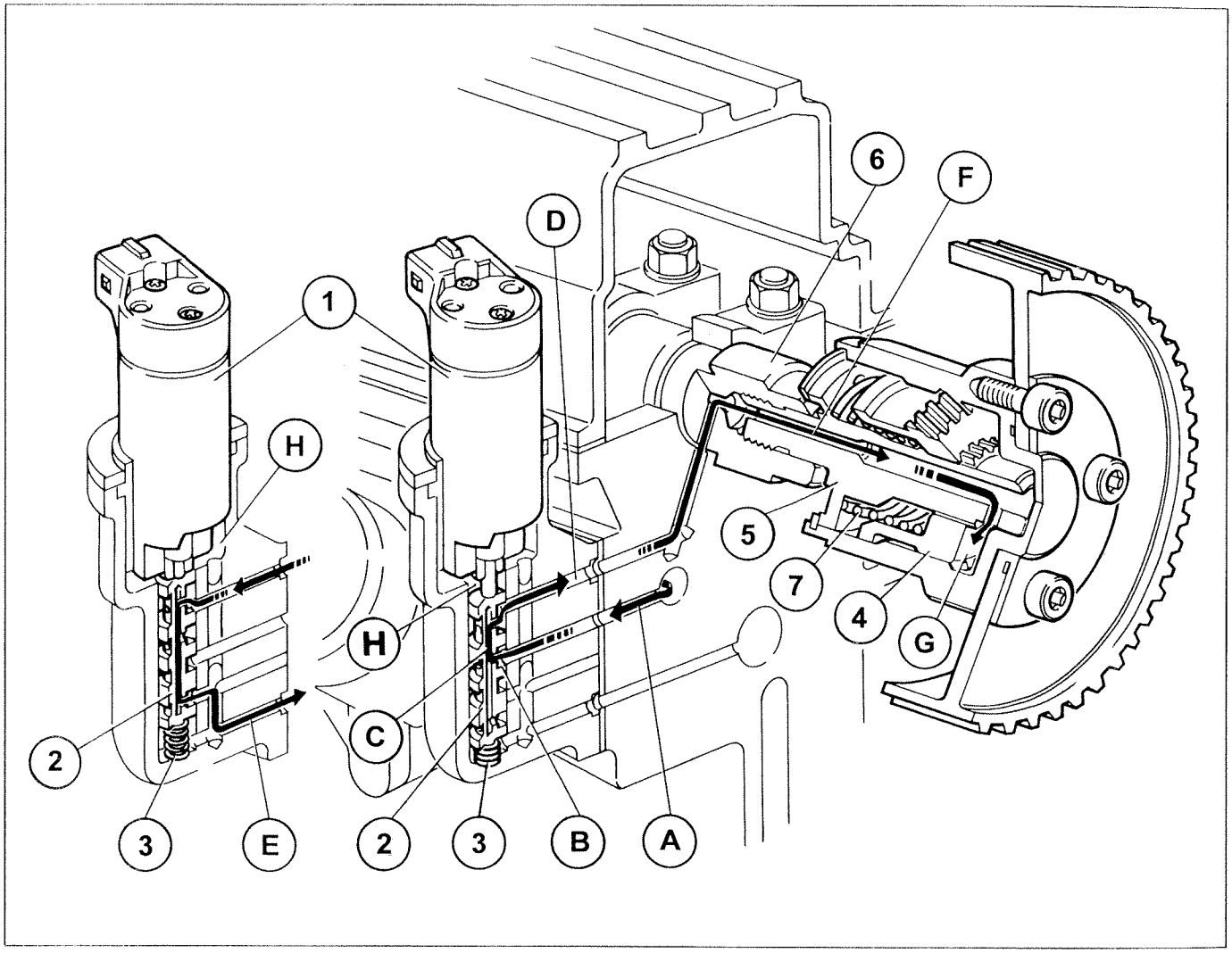

PW033L601

1

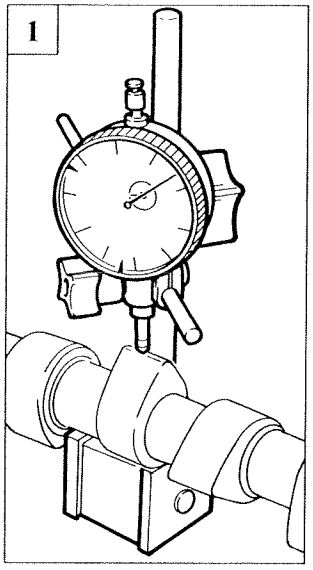

PK029L702

1

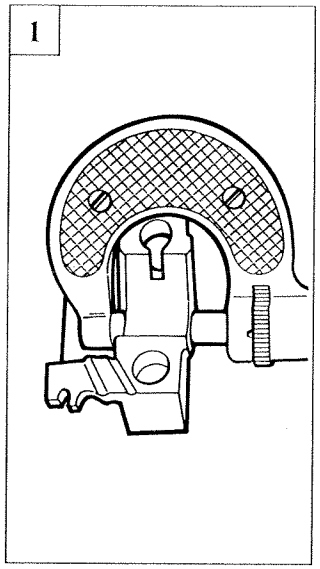

PK029L703

2

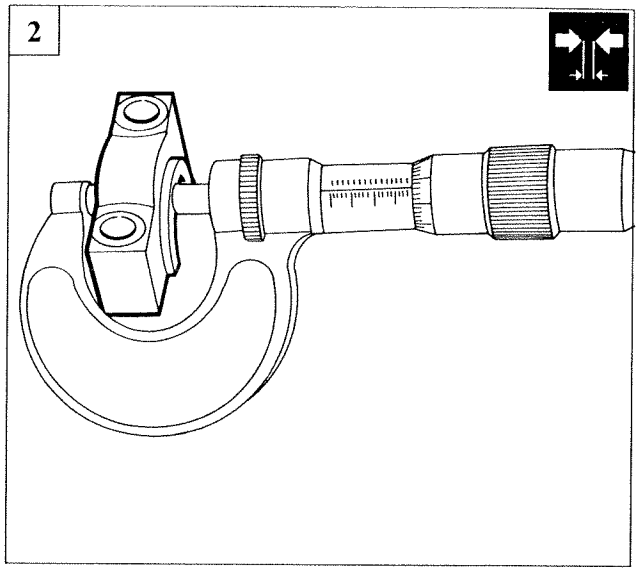

PW034L601

3

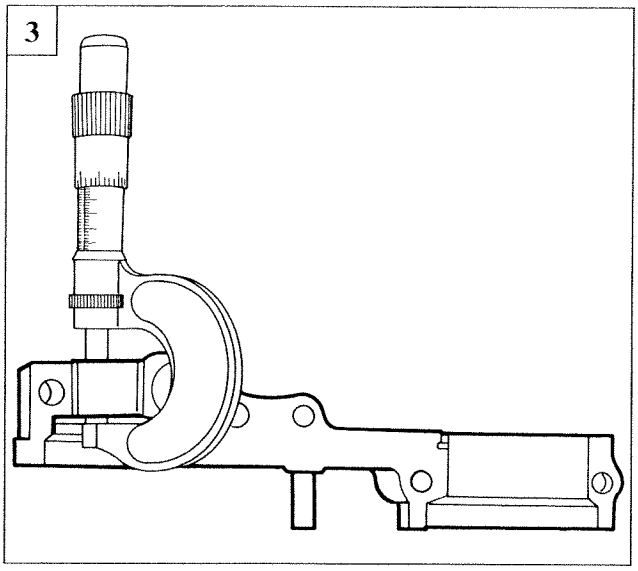

PW034L602

4 1.5 daNm

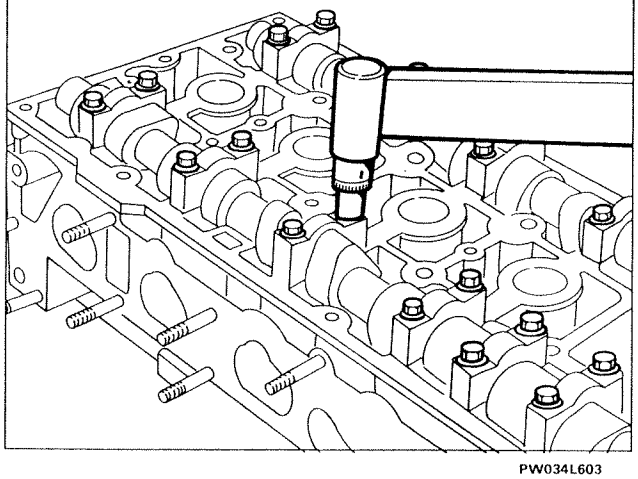

PW034L603

CAMSHAFTS

1. Measure camshaft journals and cam lift.

NOTE *Cam and journal surfaces should not show signs of wear, scoring or binding. Otherwise replace camshaft.*

2. Measure thickness of front cap acting as intake end camshaft shoulder.

3. Measure thickness of mount acting as exhaust end camshaft shoulder.

4. Position camshaft and caps. Then tighten camshaft cap retaining bolts to specified torque.

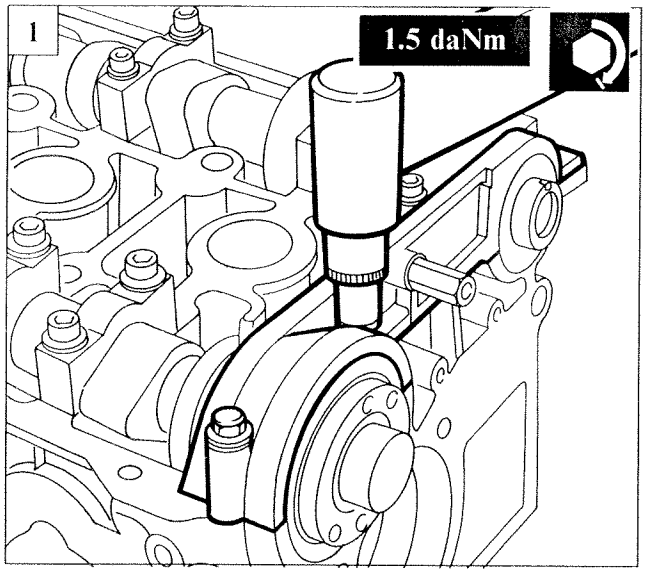

PW035L602

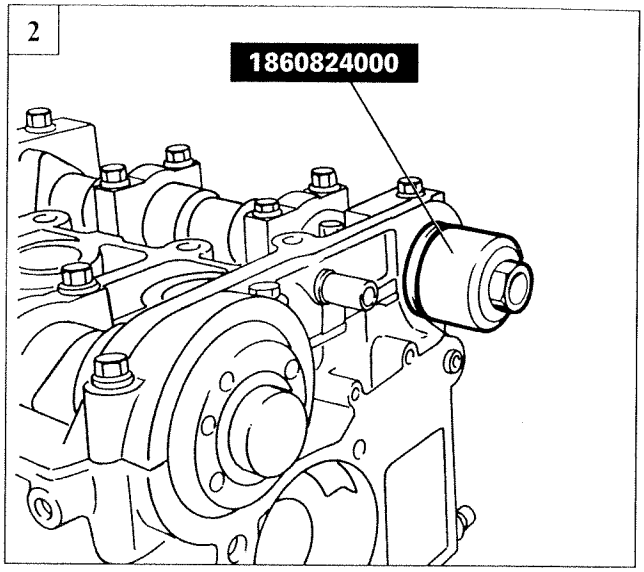

PW035L604

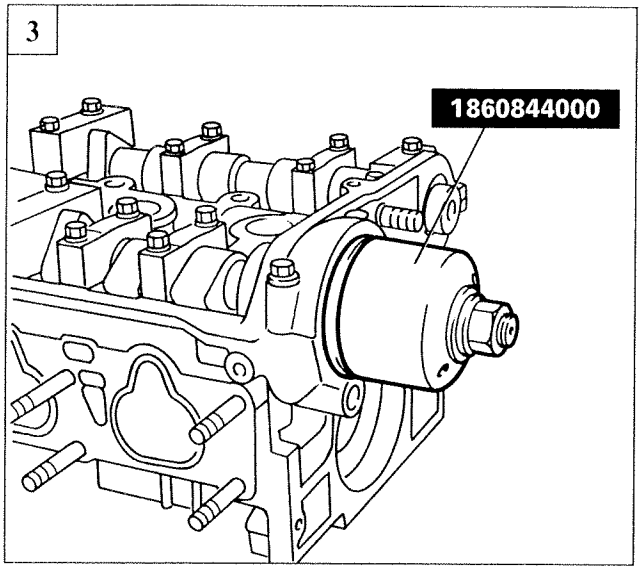

PW035L605

1. Fit the front camshaft cap. Spread sealant LOCTITE 573/510 on the contact surfaces between the front cap and the cylinder head. Then tighten the retaining bolts to the specified torque.

2.3. Fit sealing rings on the camshafts using tools 1860824000 and 1860844000 as shown in the figure.

4. Measure camshaft end float.

5. Fit the timing sensor and coolant pump. Tighten retaining bolts to the specified torque

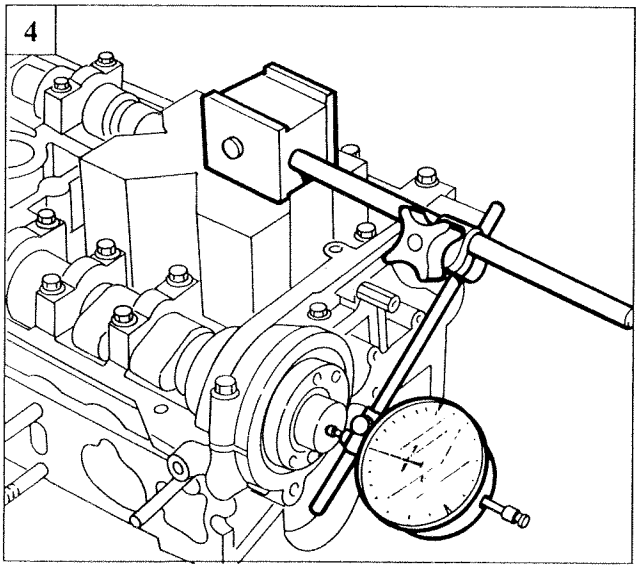

PW035L603

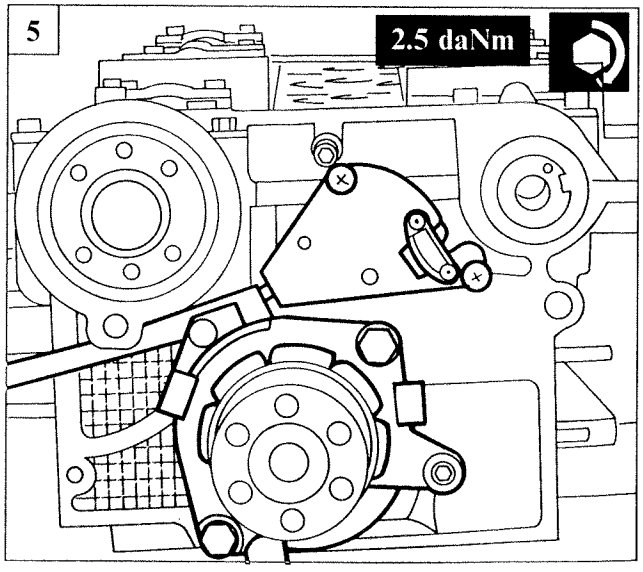

PW024L606

10.

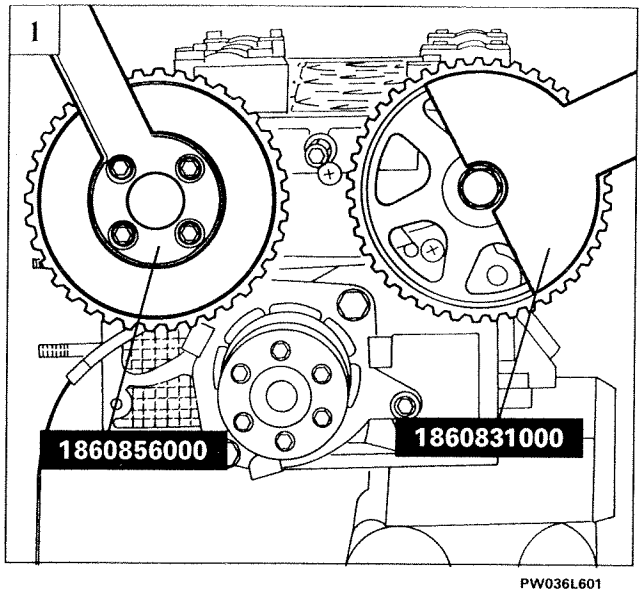

PW036L601

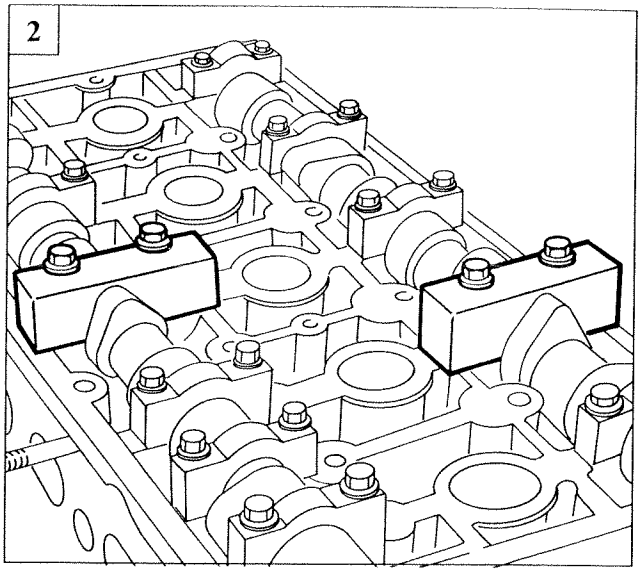

PW023L603

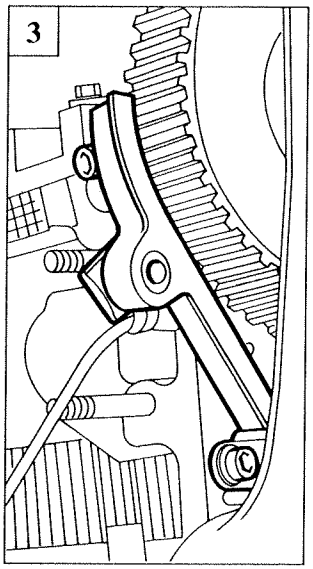

PW006L602

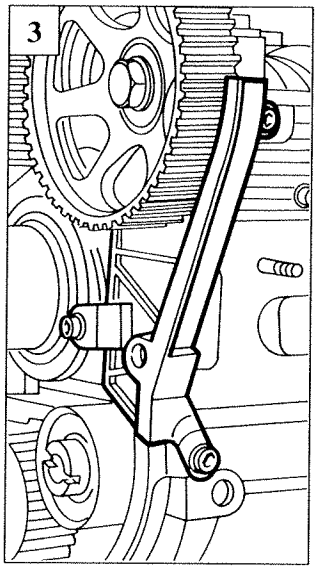

PW006L603

1. Fit the exhaust end timing pulley and the intake side pulley. Fit the retaining screws and install wrenches to turn the the camshafts to ensure positioning of timing adjustment tools.

2. Remove 3rd camshaft cap, exhaust end, and 2nd camshaft cap, intake end. Position tools as shown in the figure and the table below to adjust camshaft timing.

NOTE *The letters "A" and "S" stand for Intake and Exhaust respectively. Ensure that profile on tools matches camshaft profile perfectly when assembling.*

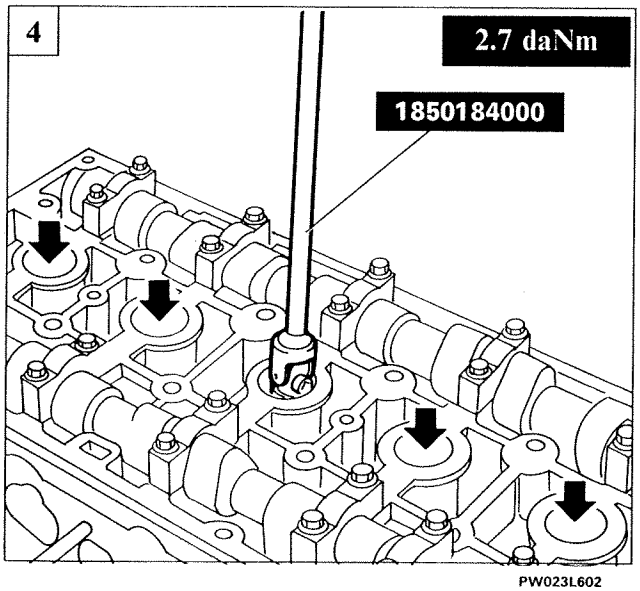

PW023L602

Engine	N°. Tool
1998 20V	1860818000
1998 20V 1996 range	1860961000
2446 20V	1860819000

3. Fit plastic guards.

4. Fit spark plugs using tool shown and tighten to specified torque.

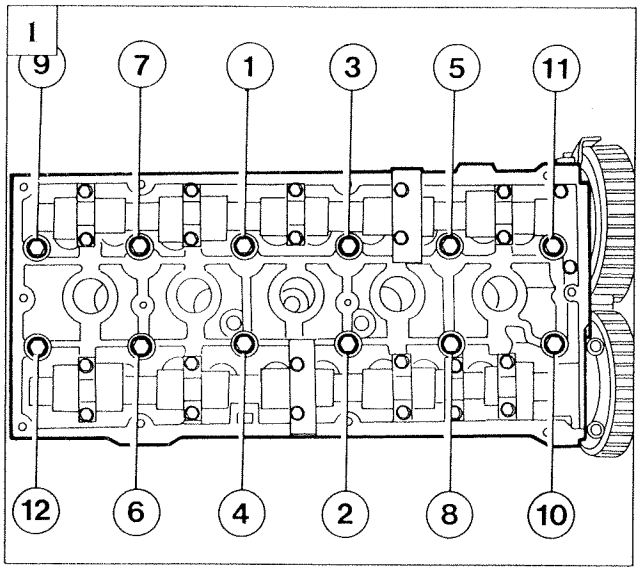

PW037L601

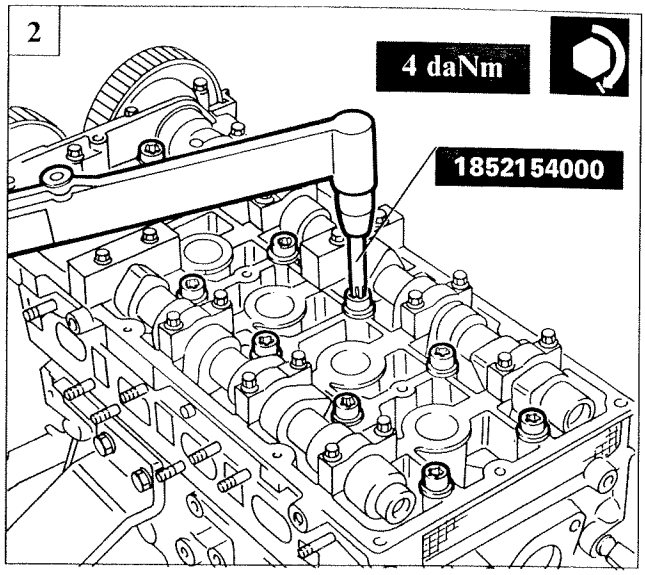

PW037L602

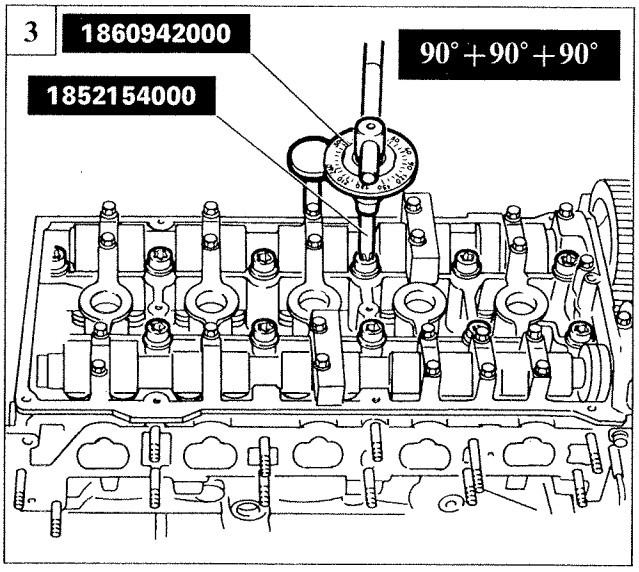

PW037L603

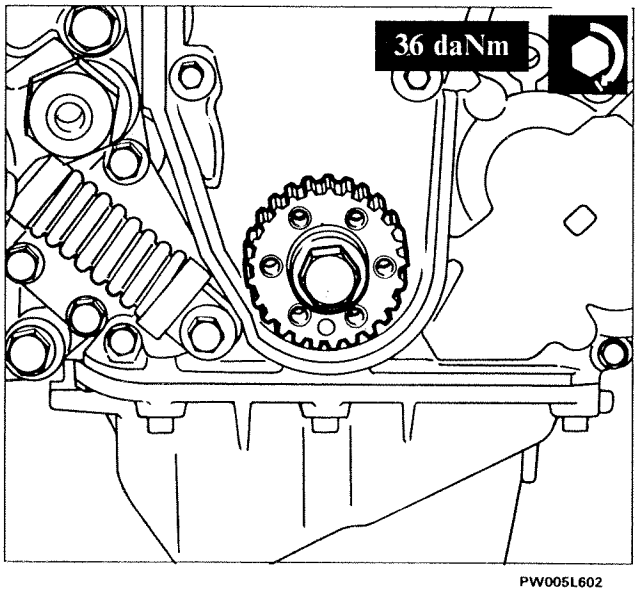

PW005L602

CYLINDER HEAD TIGHTENING

1. Position gasket on engine block with wording "ALTO" facing operator. Do not lubricate gasket and engine block surface or contaminate with oil. Then position the cylinder head and tighten the screws to a torque of 2 daNm. Observe the tightening order shown in the figure.

2. STAGE 1: Use wrench indicated to tighten bolts to a torque of 4 daNm.

3. STAGE 2: Tighten all bolts through a further 90°, respecting the tightening order described previously.

   STAGE 3: Tighten all bolts through a further 90°.

   STAGE 4: Tighten all bolts through a further increase of 90°.

4. Fit flywheel cover and flywheel. Position the flywheel retainer 1860846000, then fit the camshaft drive gear onto the crankshaft. Tighten the retaining bolt to the specified torque and remove the flywheel retainer.

Camshaft gear retaining bolt thread is left handed.

1

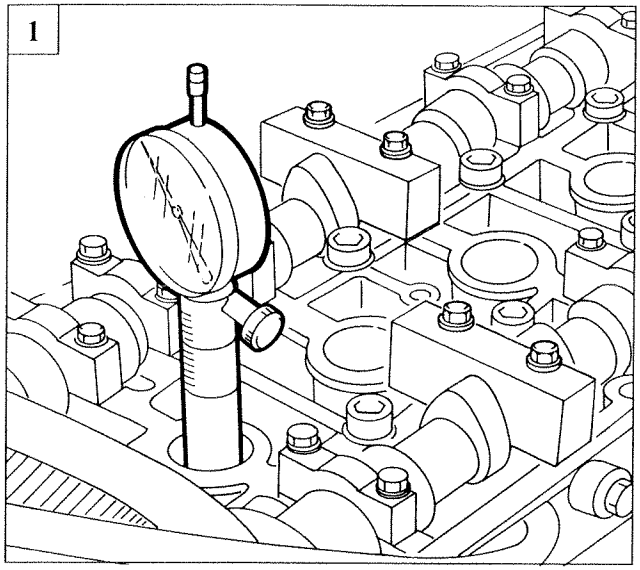

PW038L604

2

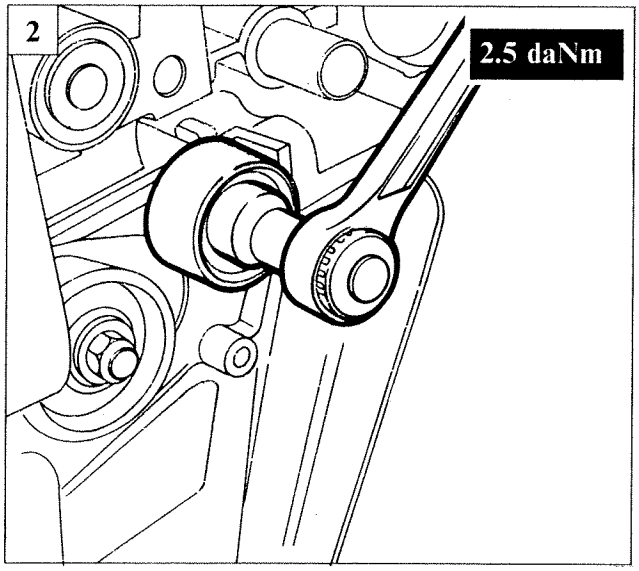

PW038L603

3

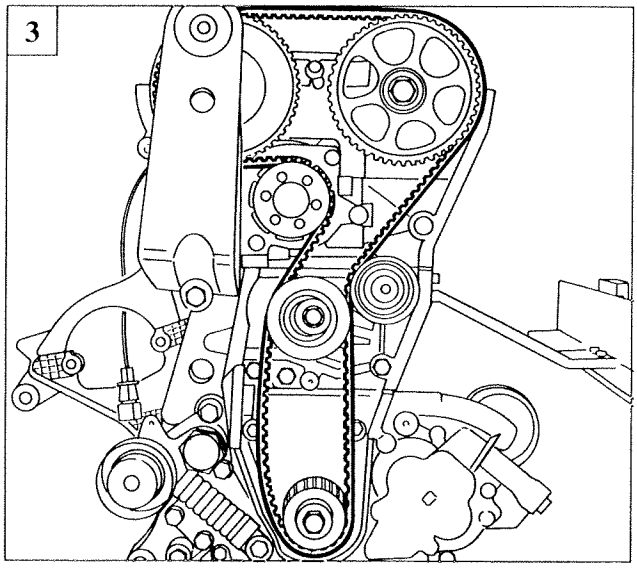

PW039L601

TIMING ADJUSTMENT

1. Fit tool 1860815000 for manual rotation of the crankshaft, then position tool 1895879000 to identify TDC on cylinder no. 1 and turn the crankshaft until the gauge reaches TDC.

Timing gear retaining bolt thread is left-handed.

NOTE *Camshaft timing has been adjusted previously and the appropriate tools positioned.*

2. Fit mount plate together with belt tensioner and fit fixed tensioner by tightening the retaining bolt to the specified torque. If the bolt head is notched, remove the tensioner using tool 1852159000.

TENSIONING TIMING BELT

3. Fit toothed belt, respecting following installation order:

- Crankshaft gear
- Fixed guide pulley
- Exhaust end camshaft pulley
- Intake end camshaft pulley
- Automatic tensioner
- Coolant pump

An arrow on the timing belt indicates engine rotation direction. The three reference marks on the belt are used during production.

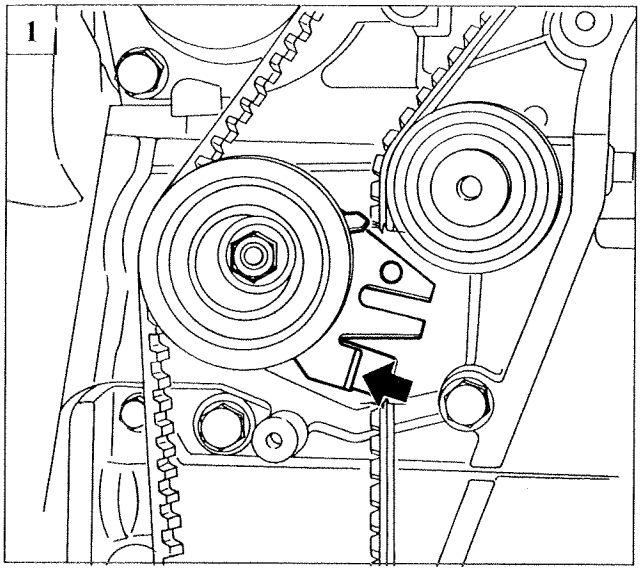

PW039L602

1. Apply a force to the automatic tensioner tab using a screwdriver so that tensioner is moved to position of maximum tension. Then tighten tensioner retaining nut to mount.

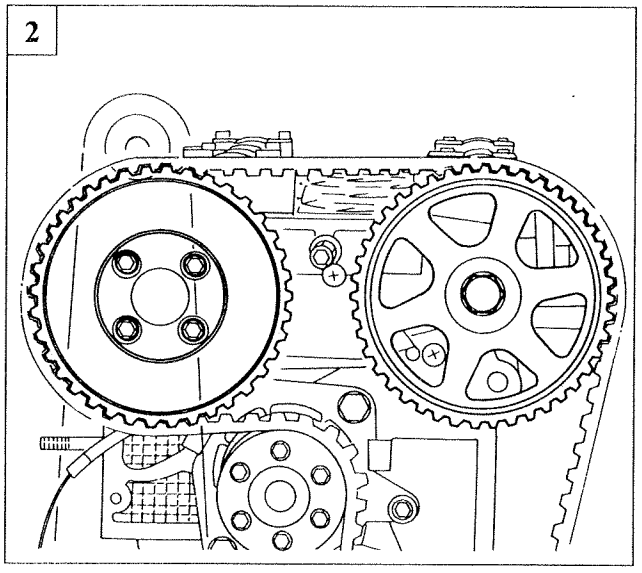

PW039L604

2. Tighten exhaust end timing pulley to a torque of 12 daNm using reaction wrench 1860831000 and intake end timing pulley to a torque of 0.9 daNm

Remove tools positioned for timing adjustment and to retain camshafts. Then turn crankshaft through two turns in its direction of rotation.

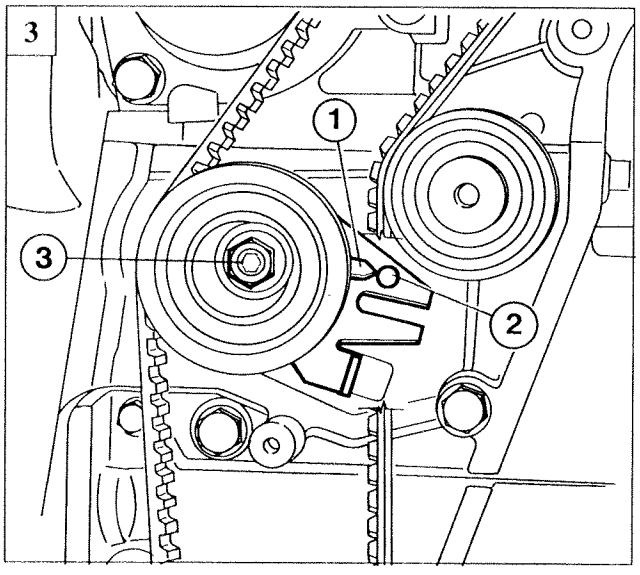

PW039L603

2.5 daNm

3. Loosen tensioner retaining nut and align mobile indicator on tensioner (1) with fixed reference (2), then tighten tensioner retaining nut to specified torque.

To tension auxiliary control belt on vehicle, refer to section 10 "Removing- refitting power unit" in manual for vehicle fitted with this engine

PART	Thread	Tightening torques daNm	ENGINE 1998 20V	ENGINE 2446 20V

ENGINE

Flanged bolt retaining main bearing caps to engine block	M 12 × 1.25	2.5 + 100°	●	●
Oil sump retaining screw to engine block	M 8	1.5	●	●
	M 6	0.9		
Nut retaining fixed belt tensioner to cylinder head	M 8	2.5	●	●
Flanged bolt retaining camshaft caps to cylinder head	M 7 × 1	1.5	●	●
Flanged screw retaining cylinder head to engine block	M 10 × 1.25	4+90°+90°+90°	●	●
Bolt retaining timing belt guard and cover guards	M 6	0.9	●	●
Cylinder head cover retaining bolt	M 6	0.9	●	●
Bolt retaining drive shaft connection mount to engine block	M 10 × 1.25	5	●	●
Nut, inlet manifold to cylinder head	M 8	2.5	●	●
Flanged screw retaining connecting rod caps	M 9 × 1	2.5+60°	●	●
Self-locking screw retaining flywheel to crankshaft	M 12 × 1.25	16	●	●
Flanged screw retaining timing drive gear to crankshaft (*)	M 16 × 1.5 left	36	●	●
Auxiliary drive pulley retaining bolt	M 8	2.5	●	●
Bolt retaining camshaft driven gear to shaft	M 12 × 1.25	12	●	●
Flanged screw retaining auxiliary mount to engine block	M 8	2.5	●	●
	M 10 × 1.25	5		
Screw with tapered safety washer retaining oil pump to engine block	M 6	0.9	●	●
Bolt retaining chain drive gear to oil pump drive	M 10 × 1.25 left	7	●	●
Bolt retaining oil pump case to crankshaft cap	M 6	0.9	●	●

PART	Thread	Tightening torques	ENGINE	
		daNm	1998 20V	2446 20V

ENGINE

Flanged self-locking nut retaining coolant pump to cylinder head	M 8	2.5	●	●
Spark plugs	M14 × 1.25	2.7	●	●

1840206000 Tool for removing front counter-rotating shaft bearing (use with 1840207814)
1850132000 Wrench for removing intake manifold fastenings
1850184000 Spark plug removal wrench
1852154000 Special wrench for knurled-headed bolts used to refit/remove cylinder head from engine block
1852159000 Tool for timing belt fixed tensioner
1852161000 Tool for removing timing variator on camshaft
1860183000 Tool for piston ring removal/refitting
1860313000 Drift for press-fitting oil seal on valve guide
1860395000 Drift for removing valve guide
1860454000 Drift for press-fitting oil rings on valve guide
1860470000 Cylinder head support tool
1860758000 Oil filter removing tool
1860790000 Extractor for half-cones, cups, springs and valves (use with 1860788000, 1860877000, 1860787000 and 1860786000)
1860812000 Valve guide installation bush
1860813000 Installer for fitting oil seal to valve guide
1860815000 Plate for turning crankshaft
1860816000 Drift for fitting oil pump gasket
1860817000 Crankshaft cover locating tool
1860818000 Camshaft timing adjustment tools for 2000 20V version
1860819000 Camshaft timing adjustment tools for 2400 24V version
1860821000 Tool for removing bush from small end
1860822000 Oil pump timing adjustment tool
1860824000 Tool for fitting exhaust camshaft sealing ring
1860831000 Reaction wrench for exhaust camshaft pulley
1860834000 Oil sump removal wrench
1860835000 Oil seal removal tools on valve guide
1860844000 Tool for fitting timing end camshaft sealing ring
1860846000 Flywheel retaining tool
1860856000 Wrench for intake pulley
1860942000 Angle wrench for angular tightening
1860961000 Tools for adjusting camshaft timing for 1998 20V 1996 range version
1861001039 Engine mounting brackets
1890385000 Valve guide grinding machine
1895868000 Tool for testing valve seal under compression (use with tool 1860490000)
1895879000 Gauge for measuring TDC.