4F01SV

SERVICE MANUAL COMPOSITION

At present, April 1998, the **Marea-Marea Weekend 1st volume manual** is composed of the sections listed below:

Print N°	Sections	Page Nos.	Comments
506.763 With binder (VI/1996)	**00**	1 ÷ 110	Introduction - Technical data
	10	1 ÷ 50	1370-12V engine fuel system
		1 ÷ 69	1581-16V engine fuel system
		1 ÷ 53	1747-16V engine fuel system
		1 ÷ 48	1998-20V engine fuel system
		1 ÷ 24	2387 TD engine fuel system
		1 ÷ 27	Removing-refitting 1370-12V power unit
		1 ÷ 29	Removing-refitting 1581-16V power unit
		1 ÷ 27	Removing-refitting 1747-16V power unit
		1 ÷ 17	Removing-refitting 1998-20V power unit
		1 ÷ 35	Removing-refitting 2387 TD power unit
	18	1 ÷ 15	Removing and refitting Composition and operation
	21-27	1 ÷ 77	Removing and refitting gearbox and diff.
		1 ÷ 69	Composition and operation AISIN automatic transmission
	33	1 ÷ 54	Removing and refitting brakes - Anti-lock brakes
	41	1 ÷ 24	Removing and refitting steering & power st.
	44	1 ÷ 29	Removing and refitting suspension
506.763/02 (VIII/1996)	**00**	44	Technical data
	10	1 ÷ 32	1910 TD - 100 engine fuel system
		3	Removing-refitting 2387 TD engine
		1 ÷ 30	Removing-refitting 1910 TD - 100 engine
	18	6	Clutch
	21-27	22	Removing-refitting gearbox and differential
	33	4	Anti-lock brakes
	41	2	Power assisted steering pump 1910 TD

Cont' ☞

Copyright by Fiat Auto

4F03SV

Print N°	Sections	Page Nos.	Comments
506.763/03 (I/1997)	00	6	Introduction - Technical data
	10	1 ÷ 34	1910 TD-75 engine fuel system
		4	Removing-refitting 1910 TD - 100 engine
		1 ÷ 24	Removing-refitting 1910 TD - 75 engine
	41	6	Steering and power assisted steering
506.763/04 (II/1997)	00	1 ÷ 51	Planned maintenance operations
	10	18/1÷18/2	Instructions for dismantling connector for 1747 16v engine anti-evaporation fuel system pipe rapid attachment
506.763/05 (IV/1997)	00	24	Introduction - Technical data
	10	16	1910 TD - 100 engine fuel system
		2	2387 TD engine fuel system
		4	Removing-refitting 1370 12v engine
		2	Removing-refitting 1581 16v engine
		4	Removing-refitting 1747 16v engine
		4	Removing-refitting 1998 20v engine
		4	Removing-refitting 1910 TD - 100 engine
		5	Removing-refitting 1910 TD - 75 engine
		2	Removing-refitting 2387 TD engine
	21-24	2	Composition and operation AISIN automatic transmission
	44	2	Front suspension
506.763/07 (X/1997)	00	20	Introduction - Technical data
	10	1	1370 engine fuel system
	10	4	1581 16V engine fuel system
	10	2	1910 TD 75 engine fuel system
	10	2	2387 TD engine

Cont' ☞

4F04SV

Print N°	Sections	Page Nos.	Comments
506.763/08 (IV/1998)	**00**	31 ÷ 32 45 ÷ 46	Update: Technical data
	33	29 ÷ 30	Update: Adjusting load proportioning valve
		30/1 ÷ 30/2	Update: Handbrake

Copyright by Fiat Auto

4F01SV

SERVICE MANUAL COMPOSITION

At present, February 1997, the **Marea-Marea Weekend manual 1st volume** is composed of the following sections:

Print N°	Sections	Page Nos.	Comments
506.763 With binder (VI/1996)	**00**	1 ÷ 110	Introduction - Technical data
	10	1 ÷ 50	1370-12V engine fuel system
		1 ÷ 69	1581-16V engine fuel system
		1 ÷ 53	1747-16V engine fuel system
		1 ÷ 48	1998-20V engine fuel system
		1 ÷ 24	2387 TD engine fuel system
		1 ÷ 27	Removing-refitting 1370-12V power unit
		1 ÷ 29	Removing-refitting 1581-16V power unit
		1 ÷ 27	Removing-refitting 1747-16V power unit
		1 ÷ 17	Removing-refitting 1998-20V power unit
		1 ÷ 35	Removing-refitting 2387 TD power unit
	18	1 ÷ 15	Removing and refitting Composition and operation
	21-27	1 ÷ 77	Removing and refitting gearbox and diff.
		1 ÷ 69	Composition and operation of AISIN automatic transmission
	33	1 ÷ 54	Removing and refitting braking system - Anti-lock brakes
	41	1 ÷ 24	Removing-refitting steering & power steering
	44	1 ÷ 29	Removing and refitting suspension
506.763/02 (VIII/1996)	**00**	44	Technical data
	10	1 ÷ 32	1910 TD - 100 engine fuel system
		3	Removing-refitting 2387 TD engine
		1 ÷ 30	Removing-refitting 1910 TD - 100 engine
	18	6	Clutch
	21-27	22	Removing-refitting gearbox and differential
	33	4	Anti-lock brakes
	41	2	1910 TD power steering pump

Cont' ☞

Copyright by Fiat Auto

4F02SV

Print N°	Sections	Page Nos.	Comments
506.763/03 (I/1997)	**00**	6	Introduction - Technical data
	10	1 ÷ 34	1910 TD-75 engine fuel system
		4	Removing-refitting 1910 TD - 100 engine
		1 ÷ 24	Removing-refitting 1910 TD - 75 engine
	41	6	Steering and power assisted steering
506.763/04 (II/1997)	**00**	1 ÷ 51	Planned maintenance operations
	10	18/1÷18/2	Instructions for removing the 1747 16v engine fuel anti-evaporation system rapid attachment pipe connector.

Copyright by Fiat Auto

4F01SV

SERVICE MANUAL COMPOSITION

At present, January 1997, the **Marea-Marea Weekend manual 1st volume** is composed of the following sections:

Print No.	Sections	Page Nos.	Comments
506.763 With binder (VI/1996)	**00**	1 ÷ 110	Introduction - Technical data
	10	1 ÷ 50	1370-12V engine fuel system
		1 ÷ 69	1581-16V engine fuel system
		1 ÷ 53	1747-16V engine fuel system
		1 ÷ 48	1998-20V engine fuel system
		1 ÷ 24	2387 TD engine fuel system
		1 ÷ 27	Removing-refitting 1370-12V power unit
		1 ÷ 29	Removing-refitting 1581-16V power unit
		1 ÷ 27	Removing-refitting 1747-16V power unit
		1 ÷ 17	Removing-refitting 1998-20V power unit
		1 ÷ 35	Removing-refitting 2387 TD power unit
	18	1 ÷ 15	Removing and refitting Composition and operation
	21-27	1 ÷ 77	Removing and refitting gearbox and diff.
		1 ÷ 69	Composition and operation of AISIN auto. trans.
	33	1 ÷ 54	Removing and refitting brakes - Anti-lock brakes
	41	1 ÷ 24	Removing-refitting steering & power steering
	44	1 ÷ 29	Removing and refitting suspension
506.763/02 (VIII/1996)	**00**	44	Technical data
	10	1 ÷ 32	1910 TD - 100 engine fuel system
		3	Removing-refitting 2387 TD engine
		1 ÷ 30	Removing-refitting 1910 TD - 100 engine
	18	6	Clutch
	21-27	22	Removing-refitting gearbox and differential
	33	4	Anti-lock brakes
	41	2	1910 TD power steering pump

Copyright by Fiat Auto

4F02SV

Print No.	Sections	Page Nos.	Comments
506.763/03 (I/1997)	**00**	6	Introduction - Technical data
	10	1 ÷ 34	1910 TD -75 engine fuel system
		4	Removing-refitting 1910 TD - 100 engine
		1 ÷ 24	Removing-refitting 1910 TD - 75 engine
	41	6	Steering and power assisted steering

Copyright by Fiat Auto

4F01SV

WORKSHOP MANUAL COMPOSITION

To date, June 1996, the **Marea-Marea Weekend Volume 1** manual comprises the following sections:

Publication no.	Sections	Number of pages	Notes
506.763 With binder (VI/1996)	**00**	1 - 110	Introduction - Technical data
	10	1 - 50	Fuel system 1370-12V engine
		1 - 69	Fuel system 1581-16V engine
		1 - 60	Fuel system 1747-16V engine
		1 - 48	Fuel system 1998-20V engine
		1 - 24	Fuel system 2387 TD engine
		1 - 27	Removing-refitting 1370-12V engine
		1 - 29	Removing-refitting 1581-16V engine
		1 - 27	Removing-refitting 1747-16V engine
		1 - 17	Removing-refitting 1998-20V engine
		1 - 35	Removing-refitting 2387 TD engine
	18	1 - 15	Removal and refitting Description and operation
	21-27	1 - 77	Removing/refitting gearbox and differential
		1 - 69	Description and operation AISIN automatic transmission
	33	1 - 54	Removing and refitting brakes - Anti-lock braking system
	41	1 - 24	Removing/refitting steering & power steering
	44	1 - 29	Removing and refitting suspension

Copyright Fiat Auto

This manual contains the main instructions concerning the repair and maintenance of the **Fiat Marea and Fiat Marea Weekend.**
The manual is divided into sections distinguished by two-digit numbers which correspond to the spare parts microfiches and the repair time schedule.
The **INTRODUCTION AND TECHNICAL DATA (00.)** Section has the dual function of presenting the model and supporting the rest of the manual. This Section comprises technical data tables and specific information relating to the other sections in the manual.

The remaining sections (10. - 18. ecc.) contain descriptions relating to the intervention procedures.

In this manual, graphic representations and symbols are used instead of descriptions of mechanical parts, operations or methods of intervention.

Example:

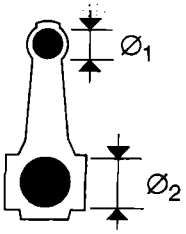

Con rod small end diameter

Big end bearing seat

Tighten to torque

ENGINES *Section 10 describes the operations for the removal and refitting of the engines, operations on the car and the fuel system, lubricating system and cooling system.*

The overhaul procedures for the individual engines are contained in sections with the following publication numbers:

Engine	Publication no.	Order no.
1370 12V	504.589/19	604.89.774
1581 16V	504.589/20	604.89.781
1747 16V	504.589/18	604.89.192
1998 20V	504.589/22	604.89.795
1910 TD	504.593/13	604.44.220
2387 TD	504.593/14	604.44.311

The first 4 sections are included in the Petrol Engine Overhaul Manual Volume 3, while the last four are included in the Diesel Engine Overhaul Manual Volum 2.

GEARBOXES *Section 21-27 describes the operations for the removal and refitting of the various gearboxes. The procedures for the bench overhaul of the various mechanical gearboxes are published in separate sections with the following publication numbers:*

505.023/08 Included in the Gearbox Overhaul Manual
505.023/03 Included in the Gearbox Overhaul Manual
505.023/18 Included in the Gearbox Overhaul Manual 2nd volume

THIS PUBLICATION IS LOOSE-LEAF SO THAT MODEL UPDATES CAN BE ADDED.

When using chemical products, closely follow the accident prevention instructions on the safety leaflet which the supplier must give to the user (in Italy in accordance with D.M. no. 46/1992)

Copyright Fiat Auto

The **Fiat Marea** is a 5-door saloon with monocoque body, transverse-mounted engine and front-wheel drive.

It is made with different engines.

The engines are with 4 or 5 cylinders in line, clockwise rotation, and positioned transversally at the front.

The following engines are fitted, depending on the version:

1370 cm³ four cylinders in line, 12 valves, running on unleaded petrol and delivering a power of 59 kW (80 bhp) at 6000 rpm.

1581 cm³ four cylinders in line, 16 valves, running on unleaded petrol and delivering a power of 76 kW (103 bhp) at 5700 rpm.

1747 cm³ four cylinders in line, 16 valves, running on unleaded petrol and delivering a power of 83 kW (113 bhp) at 5800 rpm.

1998 cm³ five cylinders in line, 20 valves, running on unleaded petrol and delivering a power of 108 kW (147 bhp) at 6100 rpm.

1910 TD cm³ four cylinders in line, 8 indirect injection valves, running on diesel and delivering a power of 55 kW (75 bhp) at 4200 rpm.

1910 TD cm³ four cylinders in line, 8 indirect injection valves, running on diesel and delivering a power of 74 kW (100 bhp) at 4200 rpm.

2387 TD cm³ five cylinders in line, 20 indirect injection valves, running on diesel and delivering a power of 91 kW (124 bhp) at 4000 rpm.

The **Fiat Marea Weekend** is a 5-door estate with monocoque body, tranverse-mounted engine and front-wheel drive.

It is produced with 7 different engines.

The engines are the same as those fitted to the **Fiat Marea**.

	Remove Disconnect
	Refit Connect
	Dismantling Disassembly
	Fitting Reassembly
	Tighten to torque
	Tighten to torque plus angle
	Fully tighten
	Stake nut
	Adjustment Regulation
	Visual check Check
	Warning
	Lubricate Damp
	Replacement Original parts
	Bleed the braking system
	Surface to be machined After machining
	Interference Force fit
	Dimension to be measured Measurement – Check Thickness - Clearance
	Rolling torque

	Inlet
	Exhaust
	Operation
	Tolerance Weight difference
	Preload
	Rotation
	Compression ratio
	Selection Classes
>	Oversized O'sized to .... Maximum
<	Undersized U'sized to .... Idling
	Rpm
	Ratio
	Pressure
	Temperature
	Temperature <0°C Cold Winter
	Temperature >0°C Hot Summer
	Windscreen wiper with pump washer fluid
	Rear window wiper with pump washer fluid
	Engine

Copyright Fiat Auto

This manual describes the maintenance operations and normal working procedures carried out in the workshop.
It contains the specific **WARNINGS** AND **SAFETY INSTRUCTIONS**to be carried out to ensure the safety of the vehicle and that its safety characteristics are maintained, and especially to ensure that operators work safety with no personal risks.

The warnings given are the most important and significant. However, they cannot cover all the risks associated with the operating methods with which repair interventions can be carried out and the relevant possible consequences.

Any person wishing to carry out maintenance procedures and using tools recommended by Fiat Auto must nevertheless make sure that the safety of persons and the vehicle is not put in jeopardy.

IN EACH COUNTRY, HOWEVER, IT IS NECESSARY TO OBSERVE THE CURRENT SAFETY INSTRUCTIONS CONCERNING WORKSHOPS.
ALWAYS REFER TO THE SPECIAL SIGNS DISPLAYED IN THE WORKSHOP.

The words **WARNING** and **ATTENTION** indicate the procedures to be followed with particular care to prevent accidents to staff or damage to the car's components:

WARNING: used when insufficient care could cause damage to persons.

ATTENTION: used when insufficient care could cause damage to the vehicle or parts of it.

GENERAL WARNINGS

All the operations must be carried out with the maximum attention and care to avoid damage to the vehicle and persons.

- The use of special tools is indicated for some procedures. These tools are essential for working safely and to avoid causing damage to the parts involved in the procedure.

- If necessary, mark all electrical wires and pipes to avoid reconnection errors.

- To detach parts which are stuck to each other, use an aluminium or lead hammer for ferrous materials, and a wooden or resin hammer for light alloy parts.

- Protect adequately with adhesive tape or rags all parts of the engine which, left uncovered after dismantling, present entry passages for dust or foreign bodies.

Copyright Fiat Auto

- During refitting, lubricate the parts, where necessary, to prevent seizure or stiffness during the initial operating period.
- When refitting, it is essential to observe the tightening torques and any other adjustment data.
- When refitting, it is essential to reposition correctly and carefully wiring, piping and heat shields.
- During reassembly, replace seals, oil sealing rings, spring washers, safety plates, self-locking nuts and all parts that may be damaged.

- Assemblies or parts which are removed must be replaced using only **ORIGINAL SPARE PARTS**: only in this way can the interchangeability and perfect operation of the various components be ensured.

Safety supports

- If it is necessary **to raise the vehicle**, use a suitable hydraulic jack which meets current requirements, and position the specific safety supports on the support points indicated in this manual.
- Ensure that the car CANNOT IN ANY way slide off the supports and fall while you are working. Make sure that the jacks and safety supports have been fitted correctly.
- Apply the handbrake and lock the rear wheels to prevent the car sliding off the safety supports.
- If necessary **remove the engine**, gearbox and other heavy units, and check that the lifting hooks have been fitted correctly. Do not go under raised components.

Protection of fittings

- Remove or cover the interior fittings of the car (upholstery, instruments, carpets).
- Cover glass, instruments, upholstery and carpets with heat-resistant materials before undertaking welding operations.

Protection of external components

- When external components are removed (bonnet, boot, mouldings, trim pieces), the surfaces of the bodywork must be protected to prevent scoring, using appropriate equipment or cloths, protective tape or other materials.

PROTECTING THE ENVIRONMENT

- NEVER discharge the liquids contained in the vehicle (engine oil, gearbox oil, brake fluid, etc.) in the sewerage network or other environments, but comply with current regulations concerning correct disposal.
- DO NOT discharge refrigerant from the air conditioning system into the open air, as it could be dangerous to the environment. Use only the special equipment to drain the system.
- Do not burn used products (e.g. tyres, plastic parts, etc.).
- Do not abandon batteries or other components containing chemicals in the environment; instead scrap them correctly.

Chemicals: regarding the use of chemicals, closely follow the legislation in each country.

OPERATIONS IN THE ENGINE COMPARTMENT

The engine compartment contains several moving parts, parts at high temperature and high-voltage cables which could be dangerous.

The instructions below should be followed closely:

- **Do not touch hot surfaces**
- **Do not smoke and/or use naked flames**
- **Do not work on moving components**
- **Do not wear scarves, ties or rings while working**

Engine oil

- Do not dispose of oil in the sewereage network or other environments, but conform to current regulations concerning correct disposal of waste oil.
- Engine oil is harmful to skin: reduce the contact of oil with the skin to a minimum; in the case of contact wash with soap and water.

Coolant

- When the engine is hot, the fluid in the cooling system is under pressure. To avoid leaks of boiling coolant, do not open the cap until the engine is cold.
- When pouring coolant, take care not to pour it on electrical or painted parts. If coolant is spilled, clean it off immediately.

Copyright Fiat Auto

Brake fluid

- Avoid leakage of brake fluid on painted surfaces, as the paint could be damaged; if the fluid is accidntally spilled onto paint, remove immediately with water.

- Cover pipe connections to prevent leakage of fluids.

- Before proceeding with refitting, make sure that dust and other impurities have been cleaned off all the parts.

SAFETY SYSTEM WITH AIR BAG AND/OR PRETENSIONERS

Some versions are fitted with a safety system comprising an AIR BAG cushion located on the steering wheel and another on the passenger's side of the dashboard.
In addition, there may be seat belt pretensioners on the front seats.

WARNING

These devices contain a PYROTECHNIC CHARGE:
there are therefore particular provisions concerning their correct handling; these instructions are described in detail in this manual: see "Section 55 - Electrical system".

- The maintenance, dismantling or replacement of these components requires particular care and the use of specific methods and equipment, requiring the exclusive intervention of specially trained staff.

- Particular attention should also be given to operations on compnents located NEAR the above-mentioned devices.

BODYWORK

Protective clothing
Make sure that the following are used, depending on the operations to be carried out:

1. *Work cap*
2. *Ear defenders*
3. *Welding gloves*
4. *Gloves*
5. *Protective shoes*
6. *Protective visor*
7. *Boiler suit*
8. *Dust mask*
9. *Protective goggles*

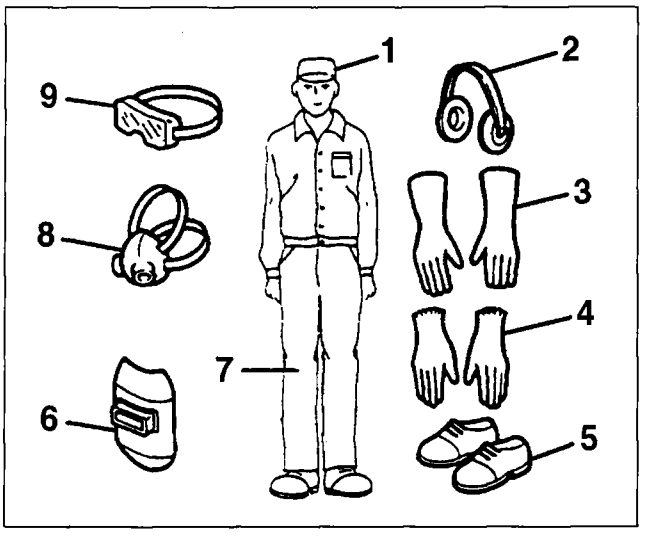

P4F08PV01

When welding

- Make sure to disconnect the battery before starting any repair work.
- If welding has to be carried out near the fuel tank, the fuel vapour separator or the fuel vapour filter, remove the latter from their seatings.
- Plug open pipe connections for fuel, fuel vapours and brake fluid pipes when the connections are disconnected.
- Remove electronic control units before carrying out electric-arc welding on the vehicle.

Working environment

- The environment must be well ventilated and lit, to ensure the safety of operators.
- As paints and sealants, if heated, can emit toxic gases, use a saw or pneumatic chisel in preference to an oxyacetylene torch for cutting and removing damaged metal panels.
- To remove paint from the metal panels, use a band sander or rotary brush.
- Use an appropriate extractor hood to contain dust.

Flammable materials

- Before using these materials, make sure that you have disconnected the battery.

Vehicle body straightener

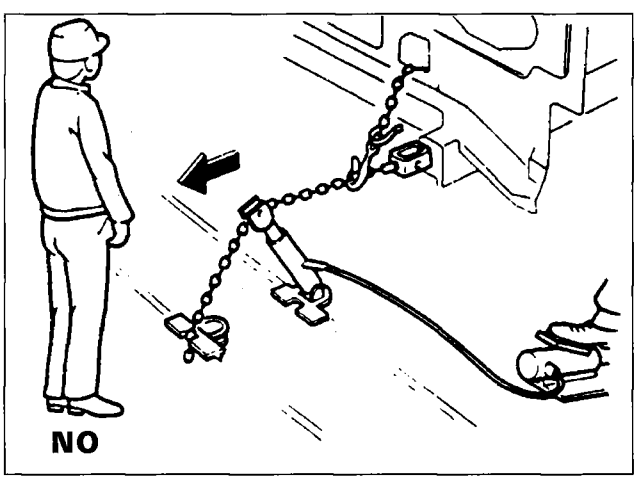

P4F09PV01

- Make sure that the straightener is used correctly in accordance with the equipment Manufacturer's Instructions Manual.
- During straightening of the damaged body shell, never stand in front of the straightener in the direction of exerting the traction force.

AIR CONDITIONER

- The coolant which accidentally leaks out of the air conditioning system or the emptying/filling device may become toxic if it is very close to naked flames or in the presence of certain metals (for example magnesium or aluminium) in the form of fine particles or powder. **It is therefore appropriate to work in the absence of naked flames and in ventilated environments with the extraction system switched on.**
- Avoid prolonged contact with the skin of fluid at the evaporation stage as the low temperature (approx. -25° C) can cause "scalding" because of excessive cold. **It is therefore appropriate to use leather or thick fabric gloves.**
- It is also essential to protect the eyes from contact with fluid at low temperature. **Always wear protective goggles.**
- Discharging fluid in the open air constitutes a danger to the environment.

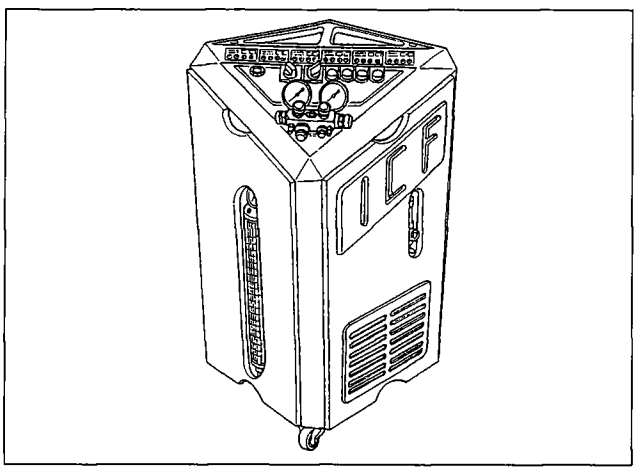

P4F10PV01

To empty the system, only use the equipment indicated in the manual.

- The fluid is stored under pressure in metal cylinders; never expose the cylinders to sun rays for prolonged periods: the increase in temperature increases the pressure, which could exceed the safety limit. Never leave the charging station cylinder completely full for prolonged periods. Never overturn the cylinder during pouring.

ELECTRICAL SYSTEM

Before undertaking any activity to electrical components, adopt and closely follow the precautions below:

- Remove rings, wrist watches and other metal objects.
- Disconnect the battery whenever wiring has to be removed or when delicate operations have to be carried out on the electrical system.
- Do not fast charge the battery, except after disconnecting the earth cable, so as not to damage the alternator diodes.
- Never try to turn the engine with the battery's earth cable loose, in order not to cause serious damage to the wiring.
- When working on the car's electrical system, never pull wires or wiring using force, as the wires could be inadvertently disconnected from the connectors or terminals.
- Disconnect all the control units and electronic devices when carrying out arc welding on the body shell.
- When replacing fuses, make sure that the new fuse is of the correct rating. Do not use fuses of a higher or lower rating.

BE CAREFUL: ELECTRIC ARCS:	even though the voltage of the electrical system is only 12V, the battery can cause high currents in the case of short circuits, causing arcs or sparks which can cause danger to the operator or start a fire.
BE CAREFUL: HIGH VOLTAGES:	the electronic ignition system generatores voltages of 20,000 V and above, which could be very dangerous to persons. Work very cautiously on or near such components.
BE CAREFUL: FIRES:	do not smoke when working near the battery or components which heat up during use (e.g. halogen bulbs), or inside the engine compartment when the engine is still hot. ALSO take the utmost care to avoid burns or damage to tools or components.

Copyright Fiat Auto

SYMBOLS

PLATES are fitted to some components of the vehicle with appropriate symbols for drawing the operators' attention to certain precautions or behaviour which is recommended or even required mandatorily.

The following table gives these plates with the component concerned and the meaning of the symbol:

DANGERS:

SYMBOL	COMPONENT	MEANING
P4F12PV01	Battery	Corrosive liquid
P4F12PV02	Battery	Protect your eyes
P4F12PV03	Battery	Explosion
P4F12PV04	Electric fan	Can also start with the engine off
P4F12PV06	Coolant reservoir	Do not remove cap when engine is hot
P4F12PV06	Ignition coil	High voltage
P4F12PV07	Belts and pulleys	Moving parts: do not approach
P4F12PV08	Air conditioner pipe	Gas under pressure: do not disconnect

NOT PERMITTED:

SYMBOL	COMPONENT	MEANING
P4F13PV01	Battery	DO NOT expose to naked flames
P4F13PV02	Heat shields Belts - Pulleys Electric fans	DO NOT bring the hands close
P4F13PV03	Jack (supplied with car)	DO NOT use for repairs

WARNINGS:

SYMBOL	COMPONENT	MEANING
P4F13PV04	Engine oil	Use only specified oil
P4F13PV05	Power steering	DO NOT exceed the maximum level in the reservoir Use only the specified fluid
P4F13PV06	Brake fluid	DO NOT exceed the maximum level in the reservoir Use only the specified fluid
P4F13PV07	Catalytic converter	Do not park the vehicle or do not place the catalytic converter on flammable surfaces
P4F13PV08	Windscreen wiper	DO NOT exceed the maximum level in the reservoir Use only the specified fluid

Copyright Fiat Auto

Index

00.

	page
INTRODUCTION	
- Car exterior	1
- Identification data	2
- Weights	4
- Performance - Fuel consumption	6
- Dimensions	8
- Capacities	10
- Characteristics of Fiat Lubricant products	11
TECHNICAL DATA	
ENGINE 1370 *12V* 1747 *16V* 1747 *16V* 1998 *20V*	
- Characteristics	12
- Typical curves	13
- Cylinder block/crankcase, crankshaft and associated components	14
- Auxiliary shft	19
- Cylinder head assembly and valve gear components	20
- Counter-balance shaft	25
- Lubrication	26
- Cooling system - Fuel system	29
- Fuel system	30
ENGINE 1910 *TD* 1187 *TD*	
- Characteristics	34
- Typical curves	35
- Cylinder block/crankcase, crankshaft and associated components	36
- Counter balance shafts	43
- Cylinder head assembly and valve gear components	40
- Lubrication	44
- Cooling system - Fuel system	46
- Fuel system	47
- Supercharging	51
CLUTCH	52
GEARBOX AND DIFFERENTIAL	55
AUTOMATIC GEARBOX - DIFFERENTIAL	57
BRAKING SYSTEM	58
STEERING	61
WHEELS	62
FRONT SUSPENSION	64-67
REAR SUSPENSION	66-69
ELECTRICAL EQUIPMENT	70
- Starting	72
- Recharging	76
- Electronic injection/ignition	78
SPECIAL TOOLS	82
TIGHTENING TORQUES	94

Copyright by Fiat Auto

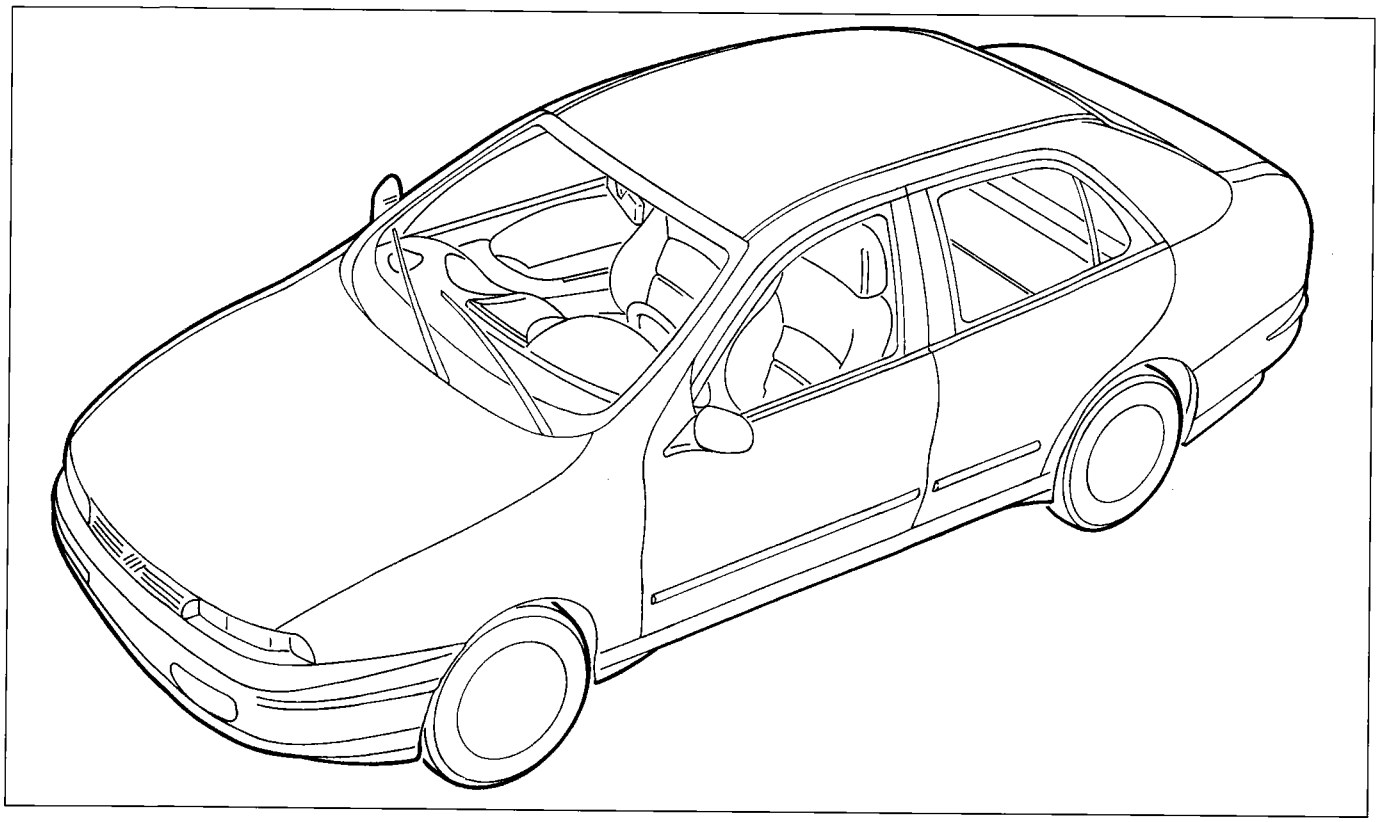

Marea 3/4 front view

P4F001A01

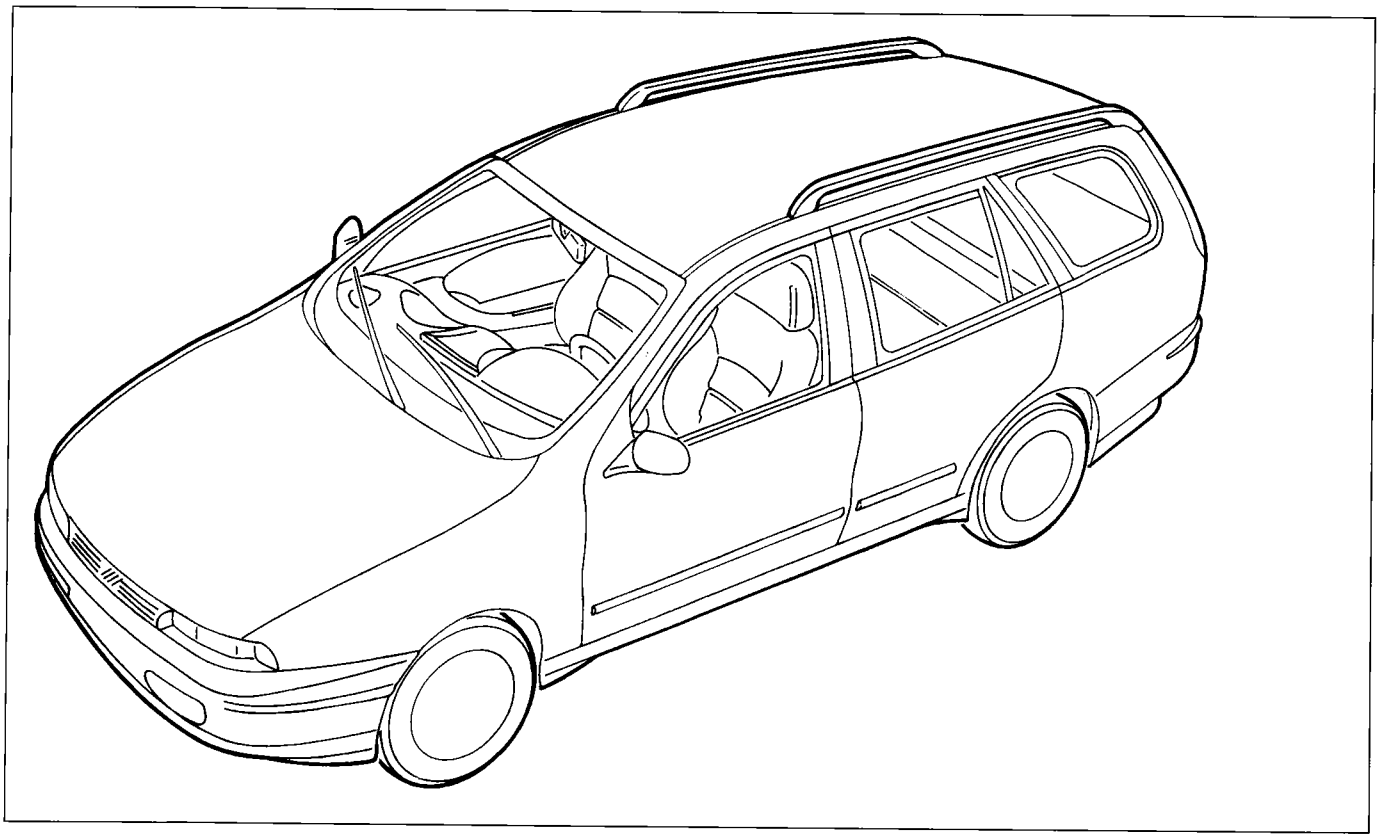

P4F001A02

Marea Weekend 3/4 front view

Copyright by Fiat Auto

	CHASSIS	ENGINE	VERSION	MAREA	MAREA WEEKEND	GEARBOX	
						1 3 5 / 2 4 R	
1370 12V	ZFA 185 000	182 A3.000	185 AX A1A 00	●		●	
			185 BX A1A 04		●		
1581 16V		182 A4.000	185 AX B1A 01	●		●	
			185 AX B1A 01B(▲)	●			
			185 AX B1A 01C(■)	●			
			185 BX B1A 05		●		
			185 BX B1A 05B(▲)		●		
			185 BX B1A 05C(▲)		●		
			185 AX B11 08	●			●
			185 BX B11 12		●		
1747 16V		182 A2.000	185 AX C1A 02	●		●	
			185 AX C1A 02B(▲)	●			
			185 AX C1A 02C(■)	●			
			185 BX C1A 06		●		
			185 BX C1A 06B(▲)		●		
			185 BX C1A 06C(■)		●		
1998 20V		182 A1.000	185 AX D1A 03	●		●	
			185 AX D1A 03B(■)	●			
			185 BX D1A 07		●		
			185 BX D1A 07B(■)		●		
1910 TD 75		182 A8.000	185 AX F1A 10	●		●	
			185 AX F1A 14		●		
1910 TD 100		182 A7.000	185 AX E1A 09	●		●	
			185 BX E1A 13		●		
2387 TD		185 A2.000	185 BX G1A 11	●		●	
			185 BX G1A 15		●		

(▲) Versions for specific markets (France)

(■) Voluntary for Germany

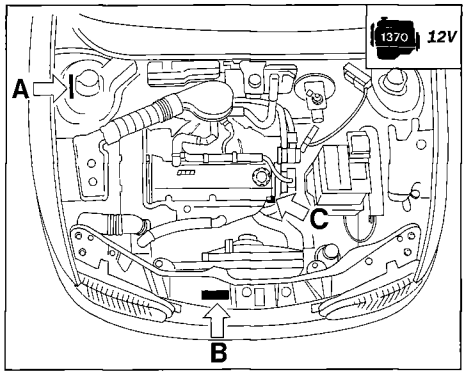

P4F002A01

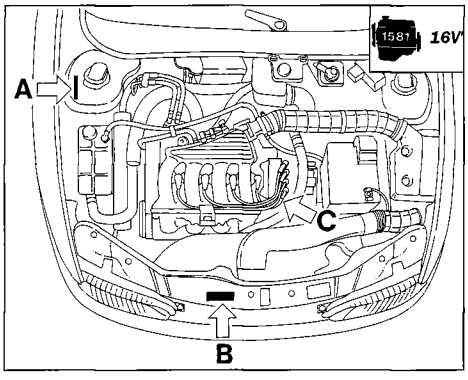

P4F002A02

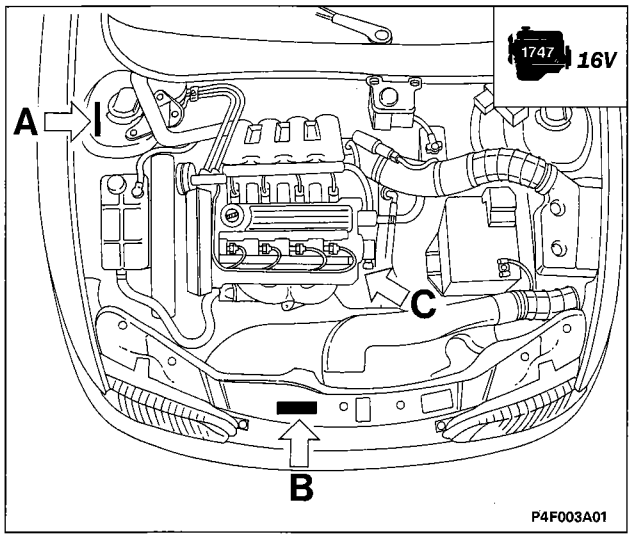

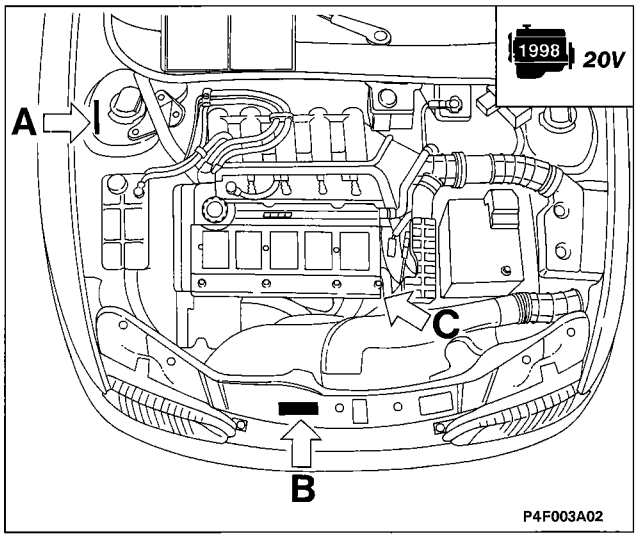

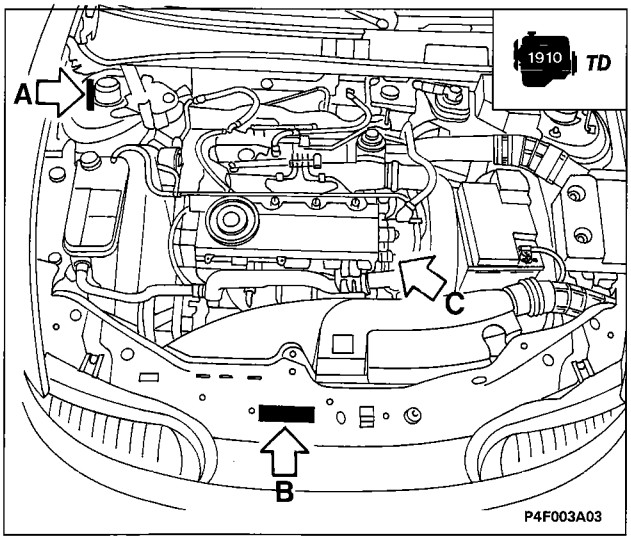

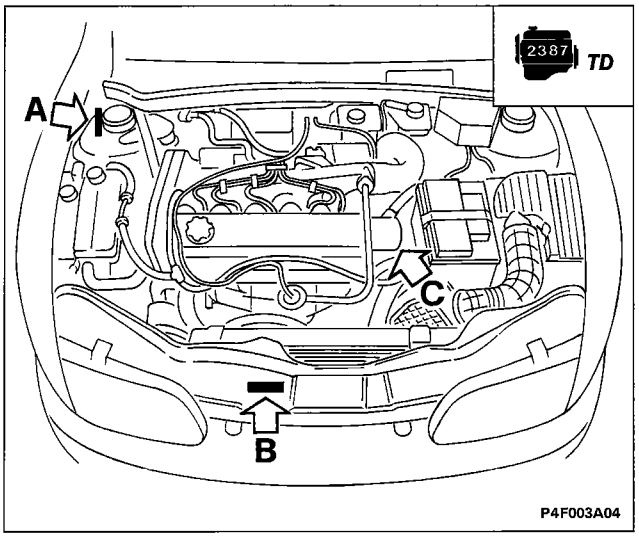

A. **Vehicle type identification code and chassis manufacture number**

B. **V.I.N. Plate**
(EEC regulations)

C. Engine **type** and **number**

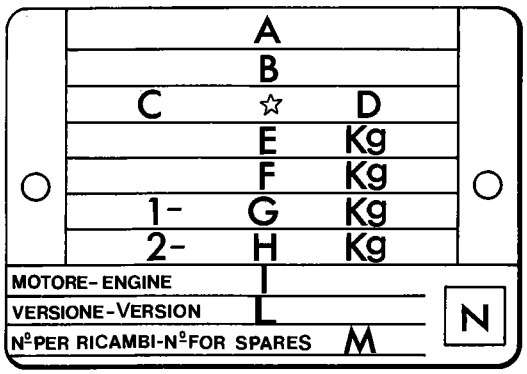

F4F003A01

A. Name of manufacturer
B. Homologation number
C. Vehicle type identification code
D. Chassis manufacture number
E. Maximum authorized weight of vehicle fully laden
F. Maximum authorized weight of vehicle fully laden plus tow
G. Maximum authorized weight on first axle (front)
H. Maximum authorized weight on second axle (rear)
I. Engine type
L. Bodywork version code
M. Spares number
N. Correct value of smoke coefficient (only for diesel engines)

Copyright by Fiat Auto

WEIGHTS (in kg)

ENGINE TYPE	12V	16V	16V C.A.	16V	20V
Marea	1085	1140	1165	1195	1255
Marea Weekend	1145	1200	1225	1255	1315
Marea +590 = (575)* (240, 225*)	1675	1730	1755	1785	1830
Marea Weekend +595 = (580)* (245, 225*)	1740	1795	1820	1850	1895
Maximum permissible loads on the axles ■	1000	1000	1000	1000	1000
	1000	1000	1000	1000	1000
Maximum permissible load on the roof	80	80	80	80	80
Load on the tow hook (trailer with braking system)	70	70	70	70	70
Without braking system	400	400	400	400	400
With braking system	1200	1200	1200	1200	1300

■ Loads which must never be exceeded

(*) Specific values for 1998 20v version

NOTE FOR VERSIONS WITH ACCESSORIES: If special equipment is fitted (non standard air conditioner, sun roof, trailer towing device, etc.), then the empty weight increases and the carrying capacity may therefore decrease in relation to the maximum permissible loads.

WEIGHTS (in kg)

ENGINE TYPE	TD 75	TD 100	TD
Marea	1185	1190	1295
Marea Weekend	1245	1250	1355
Marea +590 = 240	1775	1780	1885
Marea Weekend +595 = 245	1840	1845	1950
Maximum permissible loads on the axles ■	1000	1000	1000
	1000	1000	1000
Maximum permissible load on the roof	80	80	80
Load on the tow hook (trailer with braking system)	70	70	70
Without braking system	400	400	400
With braking system	1300	1300	1400

■ Loads which must never be exceeded

NOTE FOR VERSIONS WITH ACCESSORIES: In the presence of special equipment (non standard air conditioner, sun roof, trailer towing device etc.), the empty weight increases and therefore the carrying capacity may decrease, in relation to the maximum permissible loads.

Copyright by Fiat Auto

ENGINE TYPE			1370 12V	1581 16V	1581 16V C.A.	1747 16V	1998 20V
Speed kph (average load)		1	45	46	MAX 187 (185)*	49	56
		2	81	80		85	87
		3	118	124		125	129
		4	156	173		164	169
		5	172 (170)*	187 (185)*		195 (193)*	207 (205)*
(*) For Marea Weekend version		R	46	46		49	51
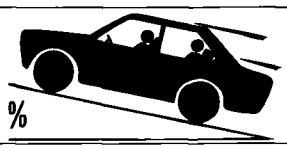 % Pendenza fully laden		Marea	34	36	32	38	39
		Marea Weekend	31	33	30	35	36
Fuel consumption directive 80/1268/CEE (*) (litres/100 km)	Urban cycle (A)	Marea	9,2	9,7(9,6)●	11,1	9,9(10)●	11,1
		Marea Weekend	9,4	9,7(9,6)●	11,1	10,1(10,2)●	11,1
	Constant speed 90 kph (B)	Marea	5,4	5,7(5,5)●	5,9	5,9(5,6)●	7,0
		Marea Weekend	5,5	5,9(5,7)●	6,1	6,0(5,7)●	7,2
	Constant speed 120 kph (C)	Marea	7,1	7,5(7,2)●	7,7	7,6(7,1)●	8,6
		Marea Weekend	7,2	7,8(7,5)●	8,0	7,8(7,3)●	8,8
	Average consumption (CCMC proposal) $\frac{A + B + C}{3}$	Marea	7,2	7,6(7,4)●	8,2	7,8(7,6)●	8,9
		Marea Weekend	7,4	7,8(7,6)●	8,4	7,9(7,7)●	9,0
Fuel consumption directive 93/116/CE (litres/100 km)	Urban	Marea	11,6	11,3	13,8	11,5(11,2)●	14,2
		Marea Weekend	11,9	11,5	14,1	11,8(11,5)●	14,3
	Extra-urban	Marea	6,1	6,6(6,5)●	8,3	6,6(6,3)●	7,3
		Marea Weekend	6,3	6,6(6,5)●	8,5	6,8(6,5)●	7,4
	Combined	Marea	8,1	8,3(8,2)●	10,3	8,4(8,1)●	9,8
		Marea Weekend	8,4	8,4(8,3)●	10,6	8,6(8,3)●	9,9
CO_2 exhaust emissions (g/km)		Marea	193	197(195)●	246	199(192)●	234
		Marea Weekend	199	200(198)●	251	205(198)●	237

The fuel consumption figures according to directive 93/116/CE have been defined in the course of homologation tests involving
- an urban cycle which includes a cold start followed by a varied urban cycle simulation.
- an extra-urban cycle which includes frequent acceleration in all gears simulating normal out of town usage. The speed varies between 0 and 120 kph.
- The average combined consumption includes 37% of the urban cycle and 63% of the extra-urban cycle.

The type of journey, traffic conditions, driving styles, atmospheric conditions, trim level/equipment/accessories, whether a roof rack is fitted, the presence of special equipment and the general state of the vehicle can lead to fuel consumption figures which differ from those obtained through the above mentioned procedures.
The CO_2 exhaust emissions (in g/km) are measured during the average combined cycle

(●) Versions for specific markets (France) (*) See specific figures at the foot of the next page

ENGINE TYPE			TD 75	TD 100	TD
Speed kph (average load)		1	36	36	36
		2	62	62	61
		3	96	96	101
		4	135	135	141
		5	167 (165)*	180 (179)*	195 (193)*
(*) For Marea Weekend version		R	36	36	34
% Maximum climable gradient fully laden		*Marea*	37	40	41
		Marea Weekend	34	37	38
Fuel consumption directive 80/1268/CEE (litres/100 km)	Urban cycle (A)	*Marea*	7,6	7,6	8,1
		Marea Weekend	7,9	7,9	8,4
	Constant speed 90 kph (B)	*Marea*	4,5	4,5	5,2
		Marea Weekend	4,6	4,6	5,4
	Constant speed 120 kph (C)	*Marea*	6,5	6,5	7,0
		Marea Weekend	6,6	6,6	7,1
	Average consumption (CCMC proposal) $\frac{A + B + C}{3}$	*Marea*	6,2	6,2	6,8
		Marea Weekend	6,4	6,4	6,9
Fuel consumption directive 93/116/CE (*) (litres/100 km)	Urban	*Marea*	8,5	8,7	10,2
		Marea Weekend	8,7	8,9	10,3
	Extra-urban	*Marea*	5,1	5,4	6,0
		Marea Weekend	5,3	5,6	6,1
	Combined	*Marea*	6,4	6,7	7,5
		Marea Weekend	6,5	6,8	7,7
CO_2 exhaust emissions (g/km)		*Marea*	169	176	199
		Marea Weekend	173	180	203

The fuel consumption figures according to directive 80/1268/CEE have been defined in the course of official tests and in accordance with procedures established by legal regulations. In particular, the bench tests measure simulated urban cycle figures whilst consumption at constant speeds of 90 and 120 kph are measured directly on a flat, dry road and in equivalent bench tests.

(*) See specific figures at the foot of page **6**

00.0

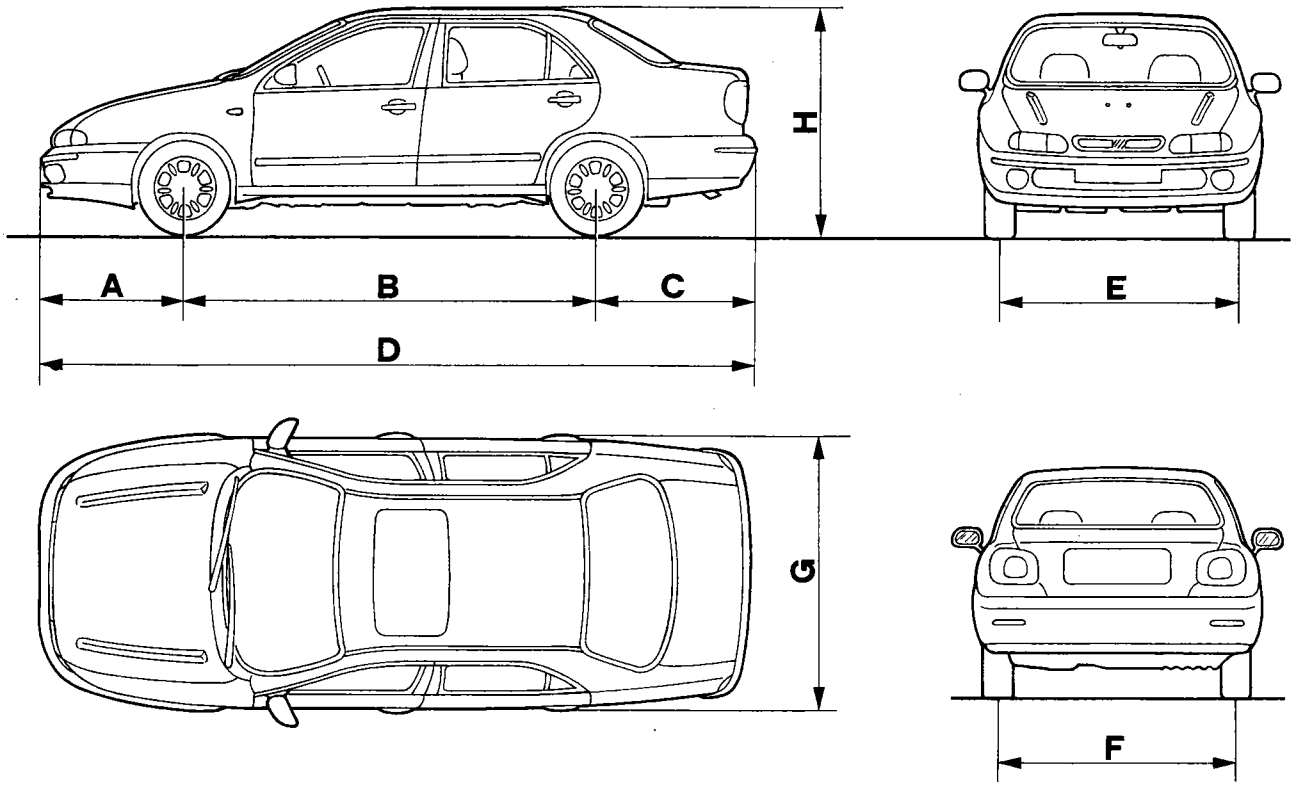

Volume of luggage compartment (VDA standards): 430 dm³
The height refers to an unladen car

P4F008A01

Engine type	DIMENSIONS (mm)							
	A	B	C	D	E	F	G	H
12V	883	2540	955	4378	1473,5	1444,5	1741	1420
16V	883	2540	955	4378	1473,5 (1461,5)*	1444,5 (1432,5)*	1741	1420
16V C.A.	883	2540	955	4378	1461,5	1432,5	1741	1420
16V	883	2540	955	4378	1461,5	1432,5	1741	1420
20V	883	2540	955	4378	1461,5	1432,5	1741	1415
TD 75	883	2540	955	4378	1473,5	1444,5	1741	1420
TD 100	883	2540	955	4378	1473,5 (1461,5)*	1444,5 (1432,5)*	1741	1420
TD	883	2540	955	4378	1461,5	1432,5	1741	1415

(*) With 185/65 R14 86H tyres

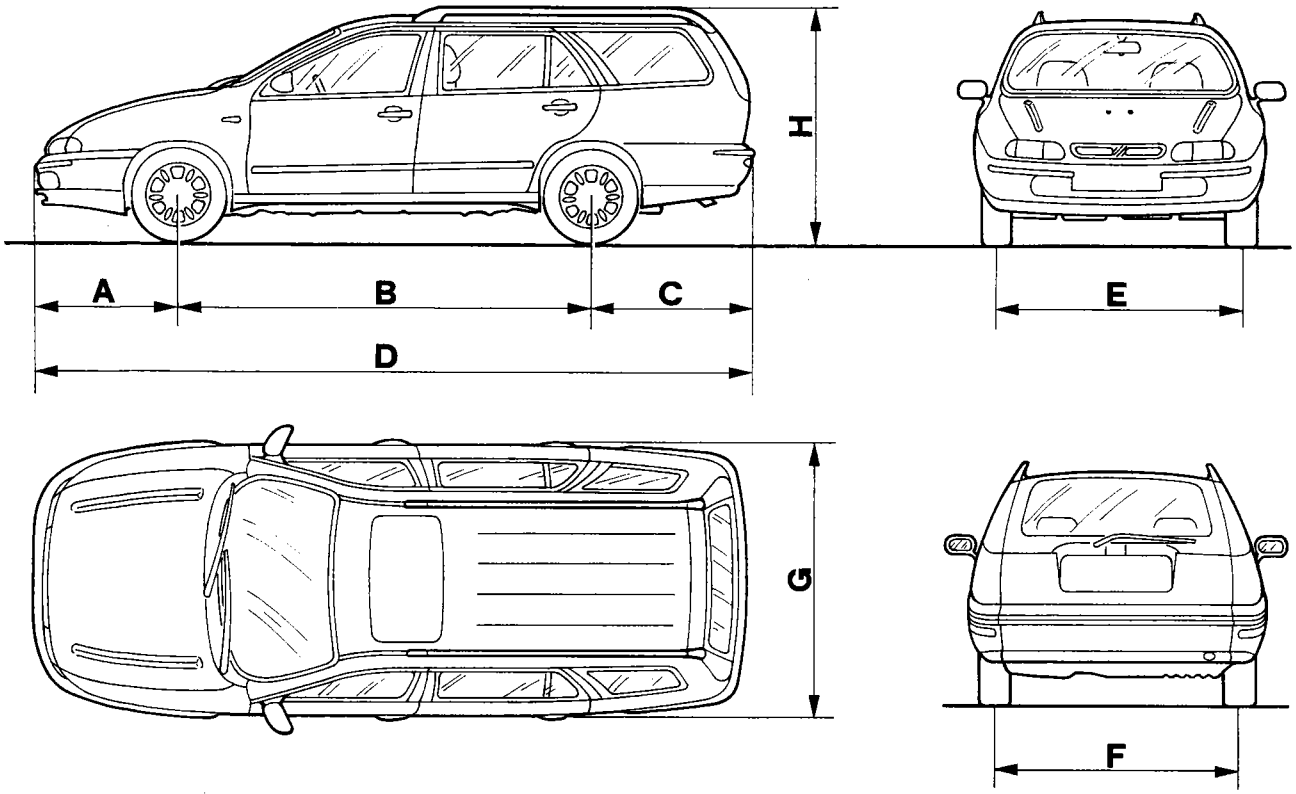

Volume of luggage compartment (VDA standards):
- with rear seat in normal usage position: 500 dm³
- with rear seat folded over: 1540 dm³

Engine type	DIMENSIONS (mm)							
	A	B	C	D	E	F	G	H
1370 12V	883	2540	1061	4484	1473,5	1444,5	1741	1500
1581 16V	883	2540	1061	4484	1473,5 (1461,5)*	1444,5 (1432,5)*	1741	1500
1581 16V C.A.	883	2540	1061	4484	1461,5	1432,5	1741	1500
1581 16V	883	2540	1061	4484	1461,5	1432,5	1741	1500
1998 20V	883	2540	1061	4484	1461,5	1432,5	1741	1495
1910 TD 75	883	2540	1061	4484	1473,5	1444,5	1741	1500
1581 TD 100	883	2540	1061	4484	1473,5 (1461,5)*	1444,5 (1432,5)*	1741	1500
2387 TD	883	2540	1061	4484	1461,5	1432,5	1741	1495

(*) With 185/65 R14 86H tyres

Copyright by Fiat Auto

Capacities	Unit		Quantity dm³(l)	Quantity (kg)
Petrol ⩾ O.R. 95 Unleaded		1370-1581-1747-1998	63	–
Diesel		1910 TD-2387 TD	63	–
50% + (▲)	Total capacity of cooling system	1370	6(5,6■)	–
		1581	7(6,4■)	–
		1747	6,7(6,2■)	–
		1910 TD 75	6,55(6,8■)	–
		1910 TD 100	6,3(6,55■)	–
		1998	7,35(7,2■)	–
		2387 TD	6,5(6,5■)	–
Petrol engines: SELENIA 20K (SAE 10 W/40)	Total capacity	1370	4,3	3,8
		1581	4,5	4
		1747	4,6	4,1
		1998	5,5	4,7
		1910 TD 75	4,7	4,2
		1910 TD 100	5	4,35
		2387 TD	5,8	5,1
Diesel engines SELENIA Turbo Diesel (SAE 15 W/40)	Partial capacity (periodic replacement)	1370	4,1(3,9●)	3,7(3,5●)
		1581	3,8(3,5●)	3,4(3,1●)
		1747	4,3(3,9●)	3,85(3,5●)
		1998	5(4,5●)	4,45(4●)
		1910 TD	4,5(4,2●)	4(3,75●)
		2387 TD	5,3(5●)	4,7(4,4●)
a = TUTELA ZC 75 Synth		1370-1747-1910 TD	1,7	1,5
		1581-1998 2387 TD a	2	1,8
b = TUTELA GI/2		1581 b	4,3	3,9
a = TUTELA GI/A	a	a	–	0,8
b = TUTELA MRM2	b	b	–	0,003
TUTELA TOP 4 (270°C)	Total capacity	w/out ABS	0,40	–
		with ABS	0,45	–
+ AREXONS		3%	5	–
	~ - 10°C	50%		
	~ - 20°C	100%	6,8	–

(▲) Distilled water (■) Engine sump only (■) For versions with air conditioning

Service News

Copyright by Fiat Auto

10/97

Fiat Auto S.p.A
D.M.C. - M.P.S. - Servizi Post Vendita
Tecnologie Assistenziali

Various models

models: Fiat Bravo-Fiat Brava - Fiat Marea - Fiat barchetta - Coupé Fiat

00

15.97

0010 T 120 AA **CHANGING ENGINE OIL**

Service literature update with new oil capacity figures

Cancels and replaces the subject in question published in Service News 4/97 through the variation of the figures for the Fiat Bravo TD, Fiat Brava TD and Fiat Marea TD

TYPE OF PROBLEM

The oil capacity figures in the "Owner's Handbook" and the Service Manuals are not consistent with actual capacities of the engine.

OPERATIONS IN THE NETWORK

When changing the engine oil stick to the figures given below which update the corresponding ones in the Service Manual and the Owner's Handbook.
Provide the Customer with appropriate information on the subject, as necessary.

Model/version	Engine sump, filter and pipes (1st filling)		Engine sump		Engine sump and oil filter	
	dm³	Kg	dm³	Kg	dm³	Kg
Fiat Bravo 1.6	4,5	4,0	3,5	3,1	3,8	3,4
Fiat Brava 1.6	4,5	4,0	3,5	3,1	3,8	3,4
Fiat Marea 1.6	4,5	4,0	3,5	3,1	3,8	3,4
Fiat Bravo 1.8	4,6	4,1	3,9	3,5	4,3	3,85
Fiat Brava 1.8	4,6	4,1	3,9	3,5	4,3	3,85
Fiat Marea 1.8	4,6	4,1	3,9	3,5	4,3	3,85
Fiat barchetta	4,7	4,2	3,7	3,3	4,0	3,6
Coupé Fiat 1.8	5,0	4,5	4,0	3,6	4,4	3,9

CARTA RICICLATA 100% RECYCLED PAPER 100%

IF14L7

Model/version	Engine sump, filter and pipes (1st filling)		Engine sump		Engine sump and oil filter	
	dm³	Kg	dm³	Kg	dm³	Kg
Fiat Bravo TD 75 and TD 100	5	4,35	4,2	3,75	4,5	4,0
Fiat Brava TD 75 and TD 100	5	4,35	4,2	3,75	4,5	4,0
Fiat Marea TD 75	4,7	4,2	4,2	3,75	4,5	4,0
Fiat Marea TD 100	5	4,35	4,2	3,75	4,5	4,0
Fiat Marea TD 125	5,8	5,1	5,0	4,4	5,3	4,7

CARTA RICICLATA 100% RECYCLED PAPER 100%

Service News

Copyright by Fiat Auto 4/97

FIAT

Fiat Auto S.p.A
D.M.C. - M.P.S. - Servizi Post Vendita
Tecnologie Assistenziali

Various models

models: Fiat Bravo-Fiat Brava - Fiat Marea - Fiat barchetta - Coupé Fiat

00

15.97

0010 T 120 AA **CHANGING ENGINE OIL**

service literature update with new oil figures.

TYPE OF PROBLEM

The oil figures given in the "Owner's Handbooks" and the Service Manuals are not consistent with the actual engine capacities

OPERATIONS IN THE NETWORK

When changing the engine oil, refer to the figures given below which update the corresponding figures given in the Service Manual and the Owner's Handbook.

Please provide the Customer with suitable information on this subject, as appropriate.

Model/version	Engine sump, filter and pipes (1st filling)		Engine sump		Engine sump and oil filter	
	dm³	Kg	dm³	Kg	dm³	Kg
Fiat Bravo 1.6	4,5	4,0	3,5	3,1	3,8	3,4
Fiat Brava 1.6	4,5	4,0	3,5	3,1	3,8	3,4
Fiat Marea 1.6	4,5	4,0	3,5	3,1	3,8	3,4
Fiat Bravo 1.8	4,6	4,1	3,9	3,5	4,3	3,85
Fiat Brava 1.8	4,6	4,1	3,9	3,5	4,3	3,85
Fiat Marea 1.8	4,6	4,1	3,9	3,5	4,3	3,85
Fiat barchetta	4,7	4,2	3,7	3,3	4,0	3,6
Coupé Fiat 1.8	5,0	4,5	4,0	3,6	4,4	3,9

IF11D7

Model/version	Engine sump, filter and pipes (1st filling)		Engine sump		Engine sump and oil filter	
	dm³	Kg	dm³	Kg	dm³	Kg
Fiat Bravo TD 75 and TD 100	4,7	4,2	4,2	3,75	4,5	4,0
Fiat Brava TD 75 and TD 100	4,7	4,2	4,2	3,75	4,5	4,0
Fiat Marea TD 75 and TD 100	4,7	4,2	4,2	3,75	4,5	4,0
Fiat Marea TD 125	5,9	5,2	5,0	4,4	5,3	4,7

Name of product	Description International designation	Application
SELENIA 20K	Semi-synthetic multigrade engine oil grade SAE 10W40. Exceeds specifications ACEA A3-96/CCMC G5 and API SH	Temperature - 25°C ÷ 40°C
SELENIA Turbo Diesel SAE 15 W/40	Multigrade, mineral or semisynthetic engine oil grade SAE 15W40. Exceeds specifications ACEA B3-96/CCMC PD2 and API CD	Temperature - 15°C ÷ 40°C (*)
TUTELA ZC75 SYNTH	SAE 75W EP oil. Satisfies standards MIL-L-2105 and API GL4	Manual gearboxes and differentials
TUTELA W 90/MDA	SAE 80 W/90 EP oil for normal and self-locking differentials. Satisfies standards MIL–L–2105 D and API GL5	Hypoid differentials Self-locking differentials Steering boxes
TUTELA GI/A	"DEXRON II" type oil for hydraulic power steering.	Hydraulic power steering
TUTELA GI/2	"DEXRON II" type oil for automatic transmissions	Automatic gearboxes
TUTELA MRM2	Water-repellant, lithium soap based grease containing molybdenum disulphide, consistency NLGI = 2	Constant velocity joints
TUTELA MR3	Lithium soap based grease, consistency NLGI= 3	Wheel hub bearings, st. rod, various comps.
TUTELA TOP 4 (270 °C)	Synthetic fluid, F.M.V.S.S. n° 116 DOT 4 ISO 4925, CUNA NC 956-01	Hydraulic brakes and hyd. op. clutches
K 854	Lithium soap based grease, consistency NLGI = 000, containing molybdenum disulphide	Rack and pinion steering boxes
SP 349	Special grease compatible with brake fluid	Load proportioning valve Load proportioning valve rod bush
Arexons DP1	Mix. of alcohol, H20 & surf. act. agents CUNA NC 956-11	To be used neat or diluted in windscreen washer systems
Paraflu[11]	Mono-ethylene glycol based anti-freeze for cooling system, CUNA NC 596 - 16	Cooling circuits Percentage to be used 50% up to - 35°C
Diesel Mix Arexons	Additive for diesel with protective action for diesel engines	To be mixed with diesel fuel (25 cc per 10 litres)

(*) For temperatures below -15°C use SAE 10W40 grade oils

CHARACTERISTICS

	1370 12V	1581 16V	1747 16V	1998 20V
Cycle	OTTO 4 stroke			
Timing	single overhead cam	twin overhead cam		
Type of fuel system	integrated electronic injection/ignition			
Number of cylinders	4			5
Cylinder liner (bore) mm	82	86,4	82	82
Stroke mm	64,87	67,4	82,7	75,65
Capacity cc	1370	1581	1747	1998
Compression ratio	9,85±0,15	10,15±0,15	10,3±0,15	10±0,15
Max. power CEE kW (CV)	59 (80)	76 (103)	83 (113)	108 (147)
Max. power CEE rpm	6000	5750	5800	6100
Max. torque CEE daNm (kgm)	11,2 (11,4)	14,4 (14,7)	15,4 (15,7)	18,6 (19)
Max. torque CEE rpm	2750	4000	4400	4500

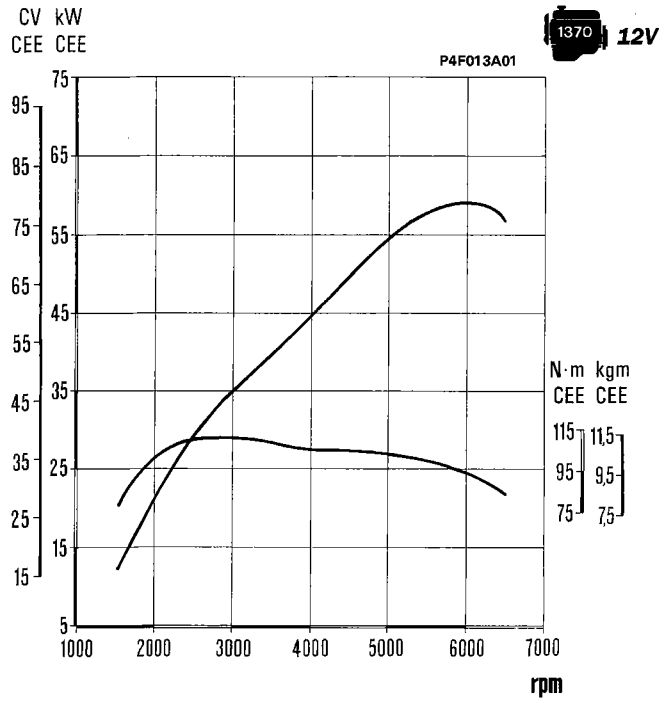

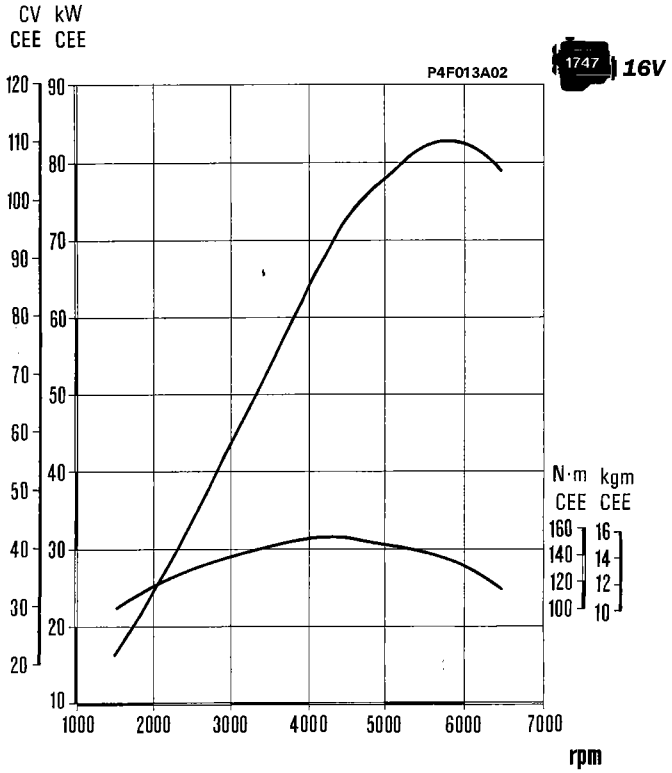

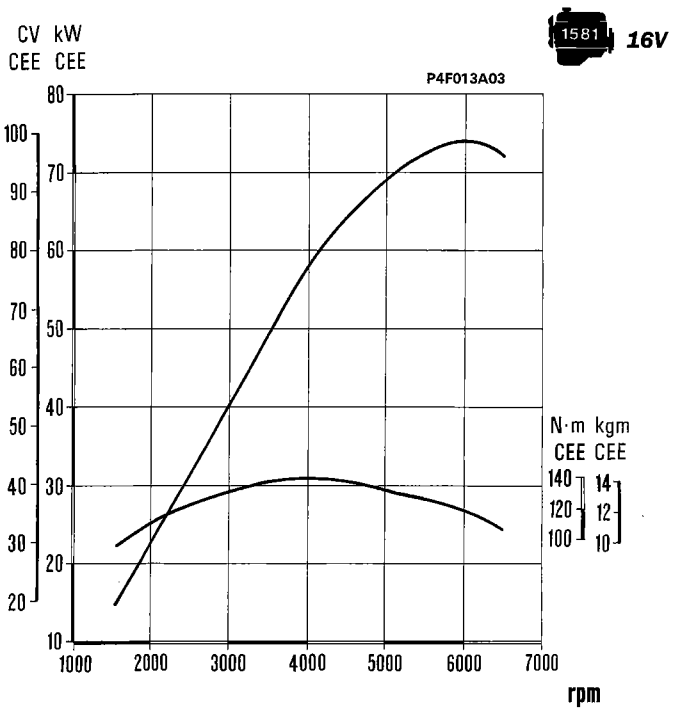

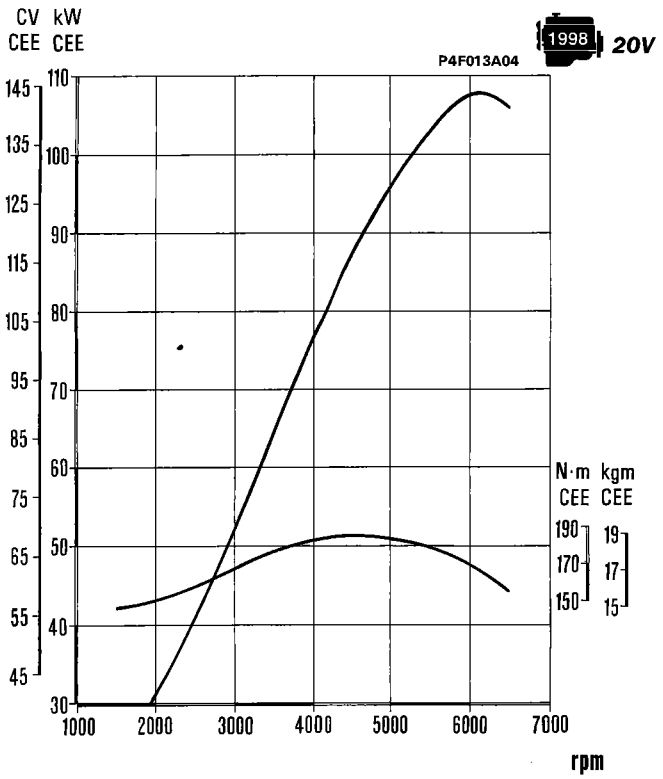

Engine power curves obtained by eec method

The power curves illustrated can be obtained with the engine overhauled and run in, without a fan and with a silencer and air filter fitted at sea level.

Copyright by Fiat Auto

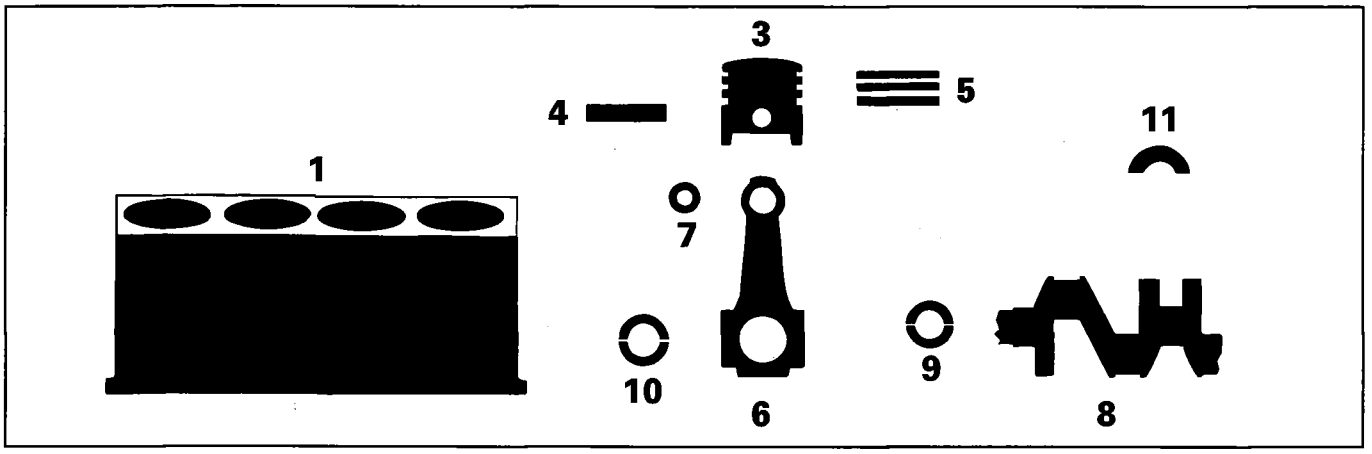

		1370 12V	1581 16V	1747 16V	1998 20V
DESCRIPTION		Values in mm			
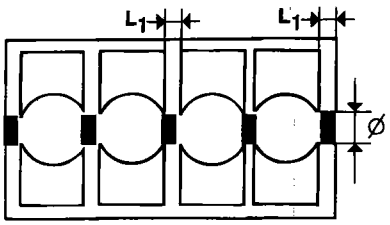 Main bearing supports	L	21,72÷21,80	-	21,72÷21,80	
	L1	-	22,14÷22,20	-	
	Ø	56,705÷56,718	54,507÷54,520	56,705÷56,718	63,705÷63,718
1 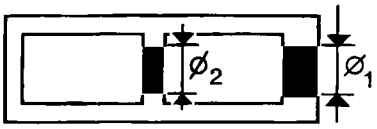	Ø1	-	38,700÷38,730	-	-
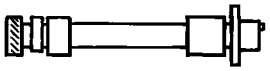 Auxiliary shaft bush housings	Ø2	-	35,036÷35,066	-	-
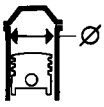 Cylinder bore Ø	A	82,000÷82,010	86,400÷86,410	82,000÷82,010	
	B	82,010÷82,020	86,410÷86,420	82,010÷82,020	
	C	82,020÷82,030	86,420÷86,430	82,020÷82,030	

DESCRIPTION		1370 12V	1581 16V	1747 16V	1998 20V
		Values in mm			
3 Piston	X	12,5	13,2	12,5	
	Ø A	81,952÷81,962	86,352÷86,362	81,952÷81,962	
	Ø B	81,959÷81,971	86,359÷86,371	81,959÷81,971	
	Ø C	81,968÷81,978	86,368÷86,378	81,968÷81,978	
	Ø FIAT >	0,4			
3	Difference in weight between pistons	±5 g			
3-1	Piston Cylinder bore Ø A	0,038 ÷ 0,058			
	Ø B	0,039 ÷ 0,061			
	Ø C	0,042 ÷ 0,062			
3	Gudgeon pin housing Ø	20,002÷20,007	21,997÷22,001	20,002÷20,007	
4 Gudgeon pin	Ø	19,996÷20,000	21,990÷21,995	19,996÷20,000	
	Ø FIAT >	0,2			
4-3	Gudgeon pin - Housing	0,002 ÷ 0,011			
3	Piston ring grooves 1	1,540÷1,560	1,525÷1,545	1,540÷1,560	1,520÷1,540
	2	1,530÷1,550	1,510÷1,530	1,530÷1,550	1,510÷1,530
	3	3,020÷3,040	3,010÷3,030	3,020÷3,040	3,010÷3,030

Copyright by Fiat Auto

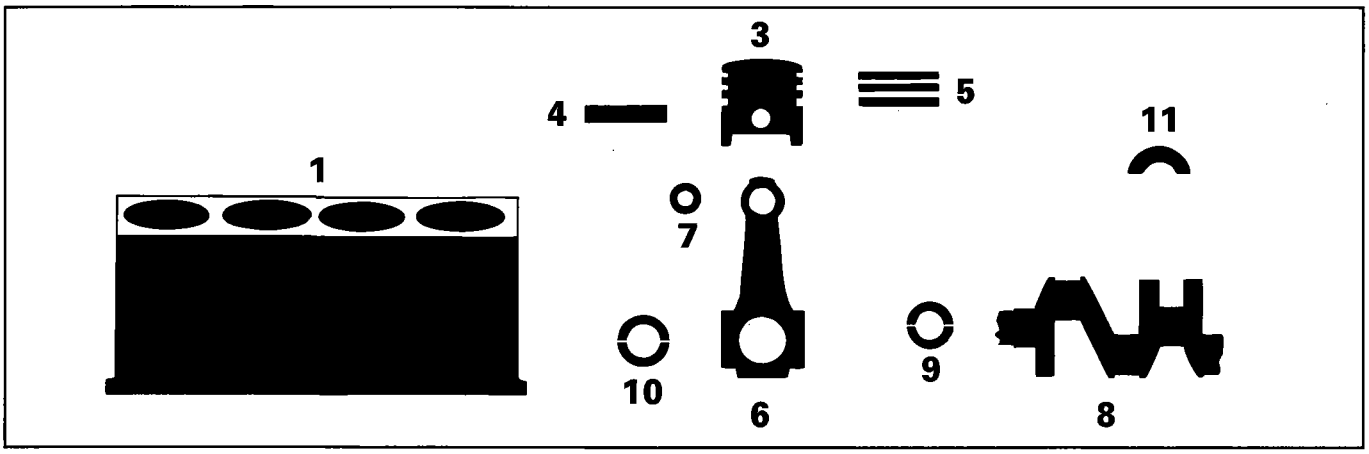

DESCRIPTION		1370 12V	1581 16V	1747 16V	1998 20V
		Values in mm			
5 Piston rings	1	1,470÷1,490		1,475÷1,490	
	2	1,475÷1,490	1,470÷1,490	1,475÷1,490	
	3	2,935÷2,945		2,975÷2,990	
	Ø FIAT >	0,4			
5-3 Piston rings Piston ring grooves	1	0,050÷0,090	0,035÷0,075	0,050÷0,085	0,030÷0,065
	2	0,040÷0,075	0,020÷0,060	0,040÷0,075	0,020÷0,055
	3	0,075÷0,105	0,065÷0,095	0,030÷0,065	0,020÷0,055
5-1 Opening at end of piston rings in cylinder bore	1	0,250÷0,500	0,200÷0,450	0,300÷0,500	
	2	0,300÷0,500	0,250÷0,500	0,300÷0,500	
	3	0,400÷1,400	0,400÷1,400	0,250÷0,450	0,250÷0,500
6 Small end bush or pin housing	Ø1	22,939÷22,972	23,939÷23,972	22,939÷22,972	
6 Big end bearing housing	Ø2	44,000÷44,012	48,630÷48,646	53,897÷53,909	51,354÷51,366

DESCRIPTION			1370 12V	1581 16V	1747 16V	1998 20V
			Values in mm			
7	Small end bush	Ø1	23,007÷23,027	24,016÷24,041	23,007÷23,027	
		Ø2	20,006÷20,012	22,004÷22,010	20,006÷20,012	
4-7	Gudgeon pin Small end bush		0,006÷0,016	0,009÷0,020	0,006÷0,020	
7-6	Small end bush Bush housing		0,035÷0,088	0,044÷0,102	0,035÷0,088	
8	Main journals	Ø1 1	52,994÷53,000	50,790÷50,800	52,994÷53,000	59,994÷60,000
		Ø1 2	52,988÷52,994	50,780÷50,790	52,988÷52,994	59,988÷59,994
		Ø1 3	52,982÷52,988	-	52,982÷52,988	59,982÷59,988
	Crank pins	Ø2 A	40,884÷40,890	45,513÷45,523	50,799÷50,805	48,238÷48,244
		Ø2 B	40,878÷40,884	45,503÷45,513	50,793÷50,799	48,232÷48,238
		Ø2 C	40,872÷40,878	-	50,787÷50,793	48,226÷48232
		L	-	26,975÷27,025	-	
		L1	26,575÷26,625	-	26,575÷26,625	
9	Crankshaft bearings	L 1	1,836÷1,840	1,840÷1,844	1,836÷1,840	
		L 2	1,839÷1,843	1,845÷1,849	1,839÷1,843	
		L 3	1,842÷1,846	-	1,842÷1846	
		Ø FIAT <	0,254 - 0,508			
9-8	Crankshaft bearing - Main journals		0,025÷0,052	0,019÷0,050	0,025÷0,052	

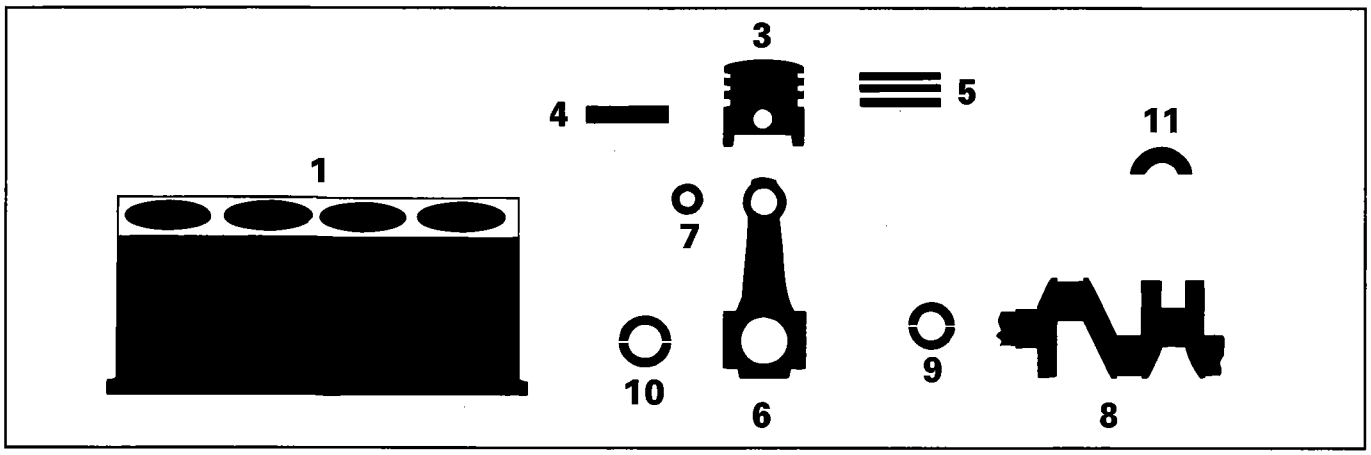

DESCRIPTION			1370 12V	1581 16V	1747 16V	1998 20V
			Values in mm			
10	Big end bearings	L A	1,536÷1,540	1,535÷1,541	1,527÷1,531	1,536÷1,540
		L B	1,539÷1,543	1,540÷1,546	1,530÷1,534	1,539÷1,543
		L C	1,542÷1,546	-	1,533÷1,537	1,542÷1,546
		Ø FIAT <	0,254 - 0,508			
10–8	Big end bearings - Main journals		0,030÷0,056	0,025÷0,063	0,030÷0,056	
11	Thrust washers	S	2,342÷2,358	2,310÷2,360	2,342÷2,358	
		S FIAT >	0,127			
11–8	Crankshaft end float		0,059÷0,161	0,055÷0,265	0,059÷0,161	

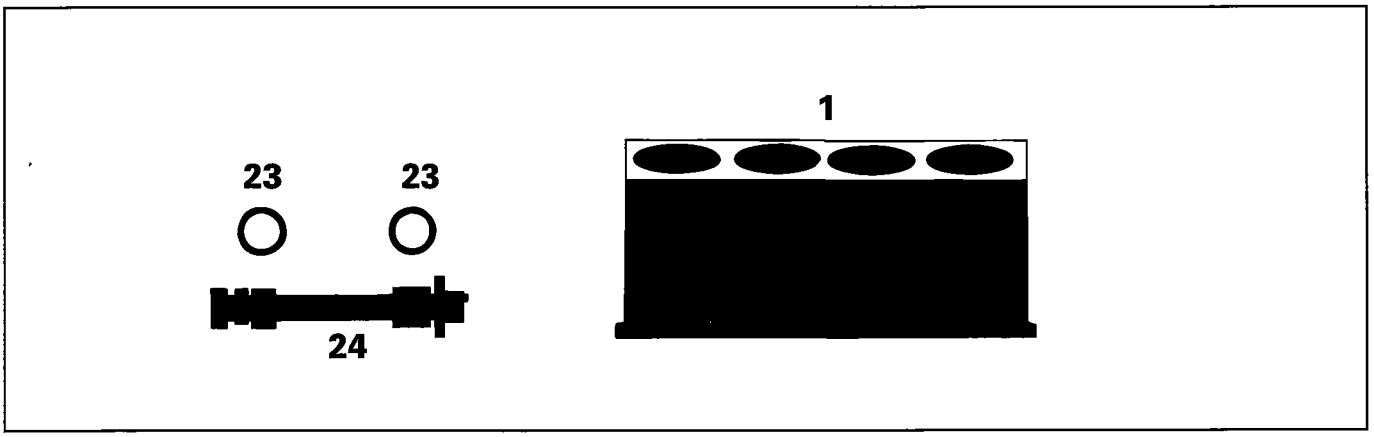

DESCRIPTION		Values in mm
23 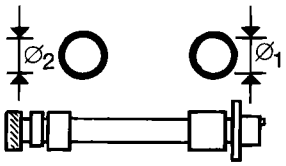 Bushes for auxiliary shaft in housing	Ø1	35,664 ÷ 35,684
	Ø2	32,000 ÷ 32,020
24 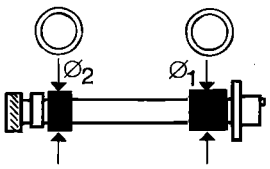 Auxiliary shaft bearings	Ø1	35,593 ÷ 35,618
	Ø2	31,940 ÷ 31,960
23-1	Bushes for shaft Cylinder block seats	must be an interference fit
24-23	Shaft bushes Bushes Ø1	0,046 ÷ 0,091
	Ø2	0,040 ÷ 0,080

Copyright by Fiat Auto

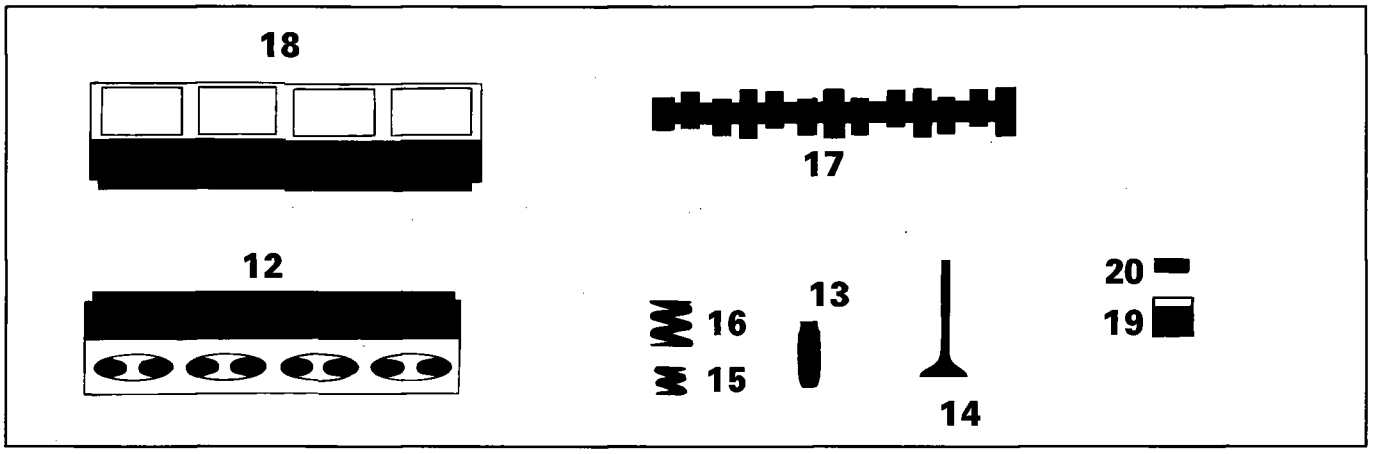

DESCRIPTION		1370 12V	1581 16V	1747 16V	1998 20V
		Values in mm			
Camshaft supports in cylinder head (12b, 1370 12V)	Ø	26,045÷26,070	-	26,045÷26,070	
Camshaft supports in cylinder head (12c, 1747 16V, 1998 20V)	L (*)	19,100÷19,150	-	19,100÷19,150	
12 — Valve guide bore in cylinder head	Ø	12,950 ÷ 12,977			
12 — Valve seat	α	45° ± 5′			
	α	45° ± 5′			
	L	about 2			
Volume of combustion chamber in cylinder head	cm^3	-	37,5	39	39

(*) Measurement of cap

DESCRIPTION			1370 12V	1581 16V	1747 16V	1998 20V
			Values in mm			
12	Tap. housing in cyl. head	Ø	14,000÷14,027	-	33,000÷33,025	
13	Valve guide	Ø1	7,022 ÷ 7,040			
		Ø2	13,010 ÷ 13,030			
		Ø2 FIAT >	0,05 - 0,10 - 0,25			
13-12	Valve guide / Bore in cylinder head		0,033 ÷ 0,080			
14	Valve	Ø1	6,982÷7,000		6,975÷6,990	
		Ø2	30,200÷34,500		33,400÷37,700	29,900÷30,200
		α	45°30′ ± 5′			
		Ø1	6,982÷7,000	6,974÷6,992	6,960÷6,975	
		Ø2	34,500÷35,700	29,750÷30,050	27,900÷28,200	25,900÷26,200
		α	45°30′ ± 5′			
14-13	Valve / Valve guide		0,022÷0,058		0,032÷0,065	
			0,022÷0,058	0,030÷0,066	0,047÷0,080	
15	Internal valve spring	P1	-		9,61÷10,6 daN	11,08÷12,07daN
		H1	-		29,5	29,5
		P2	-		20,11÷22,07daN	21,58÷23,54daN
		H2	-		20	20
16	External valve spring	P1	33,35÷37,28 daN	23,54÷25,7 daN	27,07÷29,43 daN	
		H1	37	32	34	
		P2	55,42÷60,53 daN	46÷49,93 daN	48,46÷52,38 daN	
		H2	28,1	23,5	24,5	

Copyright by Fiat Auto

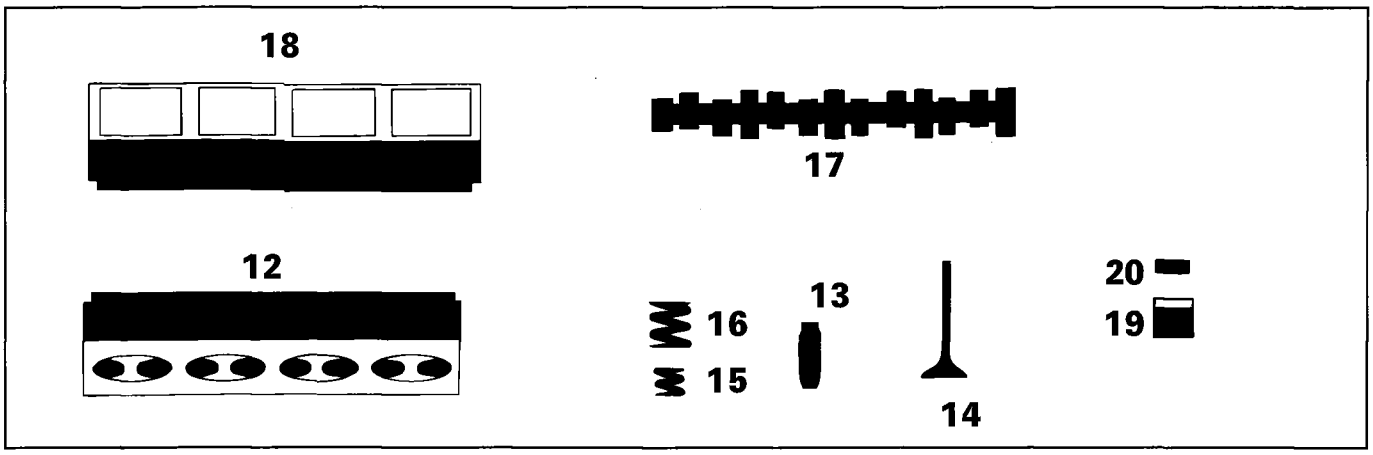

DESCRIPTION		1370 12V	1581 16V	1747 16V	1998 20V
		Values in mm			
Camshaft bearings 1581 16V — 17a	Ø1	-	29,944÷29,960	-	
	Ø2	-	52,400÷52,415	-	
	Ø3	-	52,800÷52,815	-	
1370 12V 1747 16V — 17b	Ø4	-	53,200÷53,215	-	
	Ø5	-	53,600÷53,615	-	
1998 20V — 17c	Ø	26,000÷26,015	-	26,000÷26,015	
	L	19,250÷19,330	-	19,250÷19,330	
17a 17b — Cam lift		8,9	9	7,5	9
		8,9	8,5	7,5	8
12b-c 17b-c — Camshaft bearings Cylinder head supports	radial	0,030÷0,070	-	0,030÷0,070	
	axial	0,100÷0,230	-	0,100 ÷ 0,230	

DESCRIPTION		1370 12V	1581 16V	1747 16V	1998 20V
		Values in mm			
18 Camshaft bearings in camshaft housing	Ø1	–	29,989÷30,014		–
	Ø2	–	52,445÷52,470		–
	Ø3	–	52,845÷52,870		–
	Ø4	–	53,245÷53,270		–
	Ø5	–	53,645÷53,670		–
18 Tappet housings	Ø	–	30,000÷33,025		–
17-18 Camshaft bearings Camshaft housing supports		–	0,030÷0,070		–
19 Tappet	Ø	13,972÷13,984	32,959÷32,975		
19-12 Tappet Housing in cylinder head		0,016÷0,055	–		0,025 ÷ 0,066
19-18 Tappet - Housing in camshaft housing		–	0,025÷0,066		–
17-20 clearance for timing check		0,45			
		0,45			
17-20 operational clearance		Hydraulic tappets			

TIMING DIAGRAMS

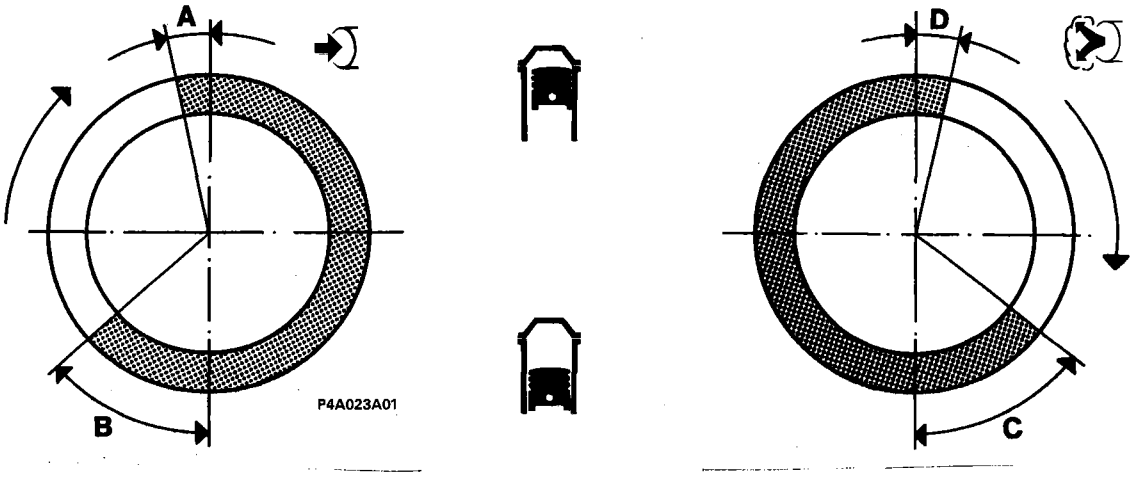

Timing angles

			1370 12V	1581 16V	1747 16V	1998 20V
A	Inlet	opens before TDC	3°	0°	0°	9° (*) after TDC
B	Inlet	closes after BDC	30°	39°	27°	49° (*)
C	Exhaust	opens before BDC	34°	31°	29°	27°
D	Exhaust	closes after TDC	2°	3°	2° before TDC	2°

(*) With phase transformer on:
A - opens BTDC = 9°
B - closes ABDC = 31°

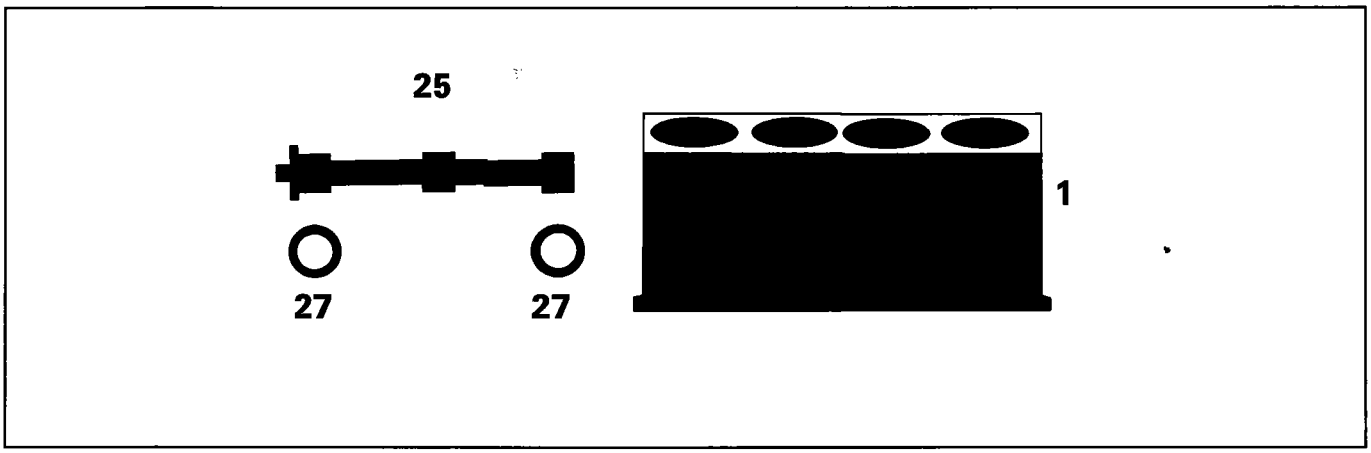

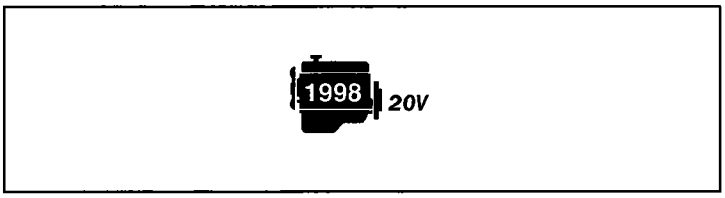

DESCRIPTION		Values in mm
25 Counter-balance shaft operation		through oil pump driven gear
27 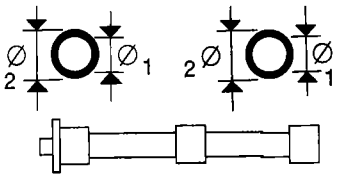 Ball bearings for counter-balance shaft	Ø1	19,900 ÷ 20,000
	Ø2	46,989 ÷ 47,000
25 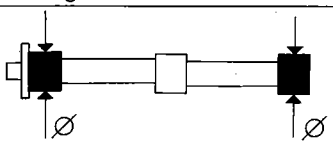 Counter-balance shaft bearings	Ø	19,980 ÷ 19,993
1 Bearing seats in cylinder block	Ø	46,975 ÷ 47,000
27-1 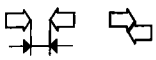	Ball bearings Cylinder block seats	+0,011 ÷ – 0,025
25-27 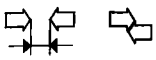	Shaft bushes Ball bearings	+0,020 ÷ – 0,003

Copyright by Fiat Auto

		12V	16V
LUBRICATION - Description		Values in mm	
Engine lubrication system		forced circulation via lobe gear pump with cartridge filter in series	
Oil pump		lobe gears	
Pump operated		through crankshaft	
Oil pressure relief valve		incorporated in crankshaft front cover	
between pump casing housing and driven gear		0,080 ÷ 0,186	
between the upper side of the gears and the pump cover		0,025 ÷ 0,061	0,025 ÷ 0,070
Full flow filter		cartridge	
Insufficient oil pressure sender unit		electrical	
Operating pressure at a temperature of 100°C		idling 1 bar at 4000 rpm 4 bar	idling 1,5 bar at 4000 rpm 4 bar
Oil pressure relief valve spring	P_1	6,28 ÷ 7,03 daN	
	H_1	36	

	1581 16V
LUBRICATION – Description	Values in mm
Engine lubrication system	forced circulation via geared pump with cartridge oil filter in series
Oil pump: type	gears
Pump operated	through auxiliary shaft
Oil pressure relief valve	incorporated in oil pump
Full flow filter	cartridge
Insufficient oil pressure sender unit	electrical
between the edge of the gears and the pump cover	0,110 ÷ 0,180
between the upper side of the gears and the pump cover	0,040 ÷ 0,106
Ø1 Ø2 Ø1–Ø2	0,015 ÷ 0,048
Ø1 Ø2 Ø1–Ø2	0,016 ÷ 0,048
between the drive gear and the driven gear	0,30
bar Operating pressure at a temperature of 100°C	idling > 1 bar at 4000 rpm > 4,5 bar
P1	6,52 ÷ 6,82 daN
H1	22,5
P2	6,92 ÷ 7,21 daN
H2	21

		1998 20V
LUBRICATION		Values in mm
Engine lubrication system		forced circulation, via geared pump with cartridge oil filter in series
Oil pump		geared, located in the crankshaft front cover
Pump operated		through chain operated by the crankshaft
Oil pressure relief valve		incorporated in crankshaft front cover
Full flow filter		cartridge
Insufficient oil pressure sender unit		electrical
between the edge of the gears and the pump casing		0,110 ÷ 0,180
between the upper edge of the gears and the pump cover		0,016 ÷ 0,086
between the drive gear and the driven gear		0,30
Operating pressure at a temperature of 100°C		idling 1 bar at 4000 rpm 4 bar
Oil pressure relief valve spring	P_1	11,73 ÷ 12,51
	H_1	35

COOLING SYSTEM

		1370 12V	1581 16V	1747 16V	1998 20V
Cooling circuit		coolant circulation via centrifugal pump, radiator, expansion tank and electric fan operated by thermostatic switch			
Water pump operation		through belt			
Thermal switch to engage fan (*)	1st stage	90° ÷ 94°C			
	2nd stage	95° ÷ 99°C (●)			
	stop 1st stage	85° ÷ 89°C			
	stop 2nd stage	90° ÷ 94°C (●)			
Engine coolant thermostat	opening	81° ÷ 85°C			
	max opening	101°÷105°C	99°÷103°C	98°÷102°C	101°÷105°C
	valve travel	9,5 mm		⩾7,5 mm	9,5 mm
Fitting clearance between impeller vanes and pump casing		-	0,3÷1,1 mm	-	-
Pressure for checking rad. water tightness		0,98 bar			
Pressure for checking calibration of exhaust spring on expansion tank		0,98 bar			

(●) For versions with air conditioning
(*) For the 1747 16v version the electric fan is operated by the control unit

FUEL SYSTEM

Type	Bosch Monomotronic SPI integrated electronic injection/ ignition	Weber-Marelli I.A.W. MPI integrated electronic injection/ ignition	HITACHIe-MPI integrated electronic injection/ ignition	Bosch Motronic MPI integrated electronic injection/ignition
Pump	Electrical, immersed in tank			
Capacity	⩾120 l/h			
Fuel pressure regulator setting	1 bar	3 bar		

CHECKING IDLE CONCENTRATION OF POLLUTANT EMISSIONS	CO (%)	HC (p.p.m.)	CO_2 (%)
Upstream of the catalytic converter	0,4 ÷ 1	⩽600	⩾12
Downstream of the catalytic converter	⩽0,35	⩽90	⩾13

Copyright by Fiat Auto

INTEGRATED ELECTRONIC INJECTION/IGNITION SYSTEM COMPONENTS	1370 12V
Electronic control unit	Bosch 0.261.203.868 Bosch 0.261.204.543 (*)
Butterfly casing	Bosch 0.438.201.523
TDC and rpm sensor	Bosch 0.281.002.102
Fuel vapour solenoid valve	Bosch 0.280.142.300
Detonation sensor	Bosch 0.261.231.007
Coolant temperature sensor	Bosch 0.280.130.026
Electric fuel pump	Bosch 0.580.453.514
Lambda sensor	Bosch 0.258.003.805
Fuel filter	Bosch

(*) From chassis n° 13101

1581 16V

INTEGRATED ELECTRONIC INJECTION/IGNITION SYSTEM COMPONENTS

Electronic control unit	Manual gearbox	I.A.W.–1AF.15	I.A.W.–1AF.1G (●)
	Auto. transmission	I.A.W.–1AF.25	I.A.W.–1AF.2G (□)
Absolute pressure sender unit (barometric capsule)		M. Marelli PRT 03/02	
Fuel vapour solenoid valve		SIEMENS EC1	
Butterfly casing		M. Marelli 54 CFA 26	
Idle adjustment actuator		M. Marelli B02 M. Marelli B25/00 (□)	
Injector		M. Marelli IWP 001	
Air temperature sender unit		JAEGER ATS-04	
Fuel pressure regulator		M. Marelli RPM 40	
Coolant temperature sender unit		JAEGER 401930-01	
TDC and rpm sensor		JAEGER CVM 01	
Butterfly valve position sensor (potentiometer)		M. Marelli PF 1C	
Twin relay supplying electric fuel pump and injection/ignition control unit		BITRON NDRS 240 113	
Electric fuel pump		MARWALL MSS 071/03	
Lambda sensor		NTK 0ZA112-A1	
Fuel filter		Bosch A.450.024.262	
Timing sensor		JAEGER SFA 200	
Ignition coils		COOPER BAE 920 A	

(●) From chassis no. 19295
(□) From chassis no. 34376

INTEGRATED ELECTRONIC INJECTION/IGNITION SYSTEM COMPONENTS	1747 16V
Electronic control unit	HITACHI MFI-009
Air flow meter (hot wire)	HITACHI GE 109381
Injector	HITACHI GL 212264
Fuel pressure regulator	RPM 40/3 bar
Coolant temperature sensor	Bosch 0.280.130.055
Electric fuel pump	WALBRO MSS 071/01
Lambda sensor	NTK 0ZA112-A3
Fuel filter	G.M. 25121074
Idle actuator	HITACHI GL 326716
Butterfly valve position sensor (potentiometer)	HITACHI GL 326686
Fuel vapour solenoid valve	BOSCH 0.280.142.300
Power module	HITACHI GE 107765 oppure HITACHI GE 108958
TDC and rpm sensor	HITACHI GE 108835
Detonation sensor	NGK KNE 03
Timing sensor	Bosch B.232.070.023
Butterfly casing	HITACHI GL 007817

INTEGRATED ELECTRONIC INJECTION/IGNITION SYSTEM COMPONENTS	1998 20V
Injection/ignition system electronic control unit	Bosch 0.261.204.381
Butterfly casing	–
Fuel pressure regulator	Bosch 0.280.160.515
Injector	Bosch 0.280.150.443
Idle adjustment actuator	Bosch 0.280.140.553
Electric fuel pump	Bosch 0.580.453.408
Air flow meter	Bosch 0.280.217.111
Fuel filter	Bosch A.450.024.262
Butterfly valve position sensor (potentiometer)	Bosch 0.280.122.001
Coolant temperature sensor	Bosch 0.280.130.026
Lambda sensor	Bosch 0.258.003.772
Fuel vapour solenoid valve	Bosch 0.280.142.300
Detonation sensor	Bosch 0.261.231.095
Hall effect injection timing sensor	Bosch 0.232.101.026
Intake air temperarture sender unit	Bosch 0.280.130.073
TDC and rpm sensor	Bosch 0.281.002.102

Copyright by Fiat Auto

CHARACTERISTICS

		1910 TD 75	1910 TD 100	2387 TD
	Cycle	Diesel 4 stroke		
	Timing	single overhead camshaft		
	Engine balancing	–		through 1 counter-bal. shaft
	Type of fuel system	Indirect injection		
	Number of cylinders	4 in line		5 in line
	Cylinder liner (bore) mm	82		
	Stroke mm	90,4		
	Capacity cc	1910		2387
	Compression ratio	20,7 ± 0,5		
Max power	kW (CEE) (CV) (CEE)	55 (75)	74 (100)	91 (124)
	rpm	4200	4200	4000
Max torque	daNm (CEE) (kgm) (CEE)	14,7 (15)	20 (20,4)	26,5 (27)
	rpm	2750	2250	2000

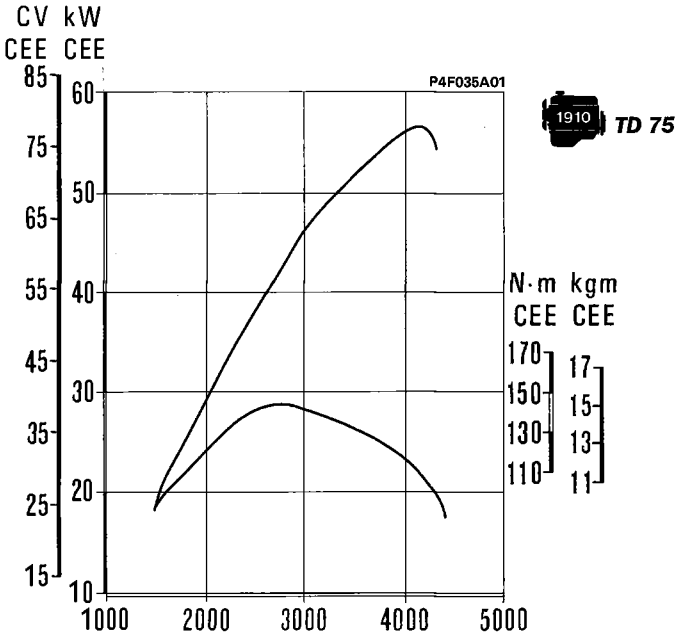

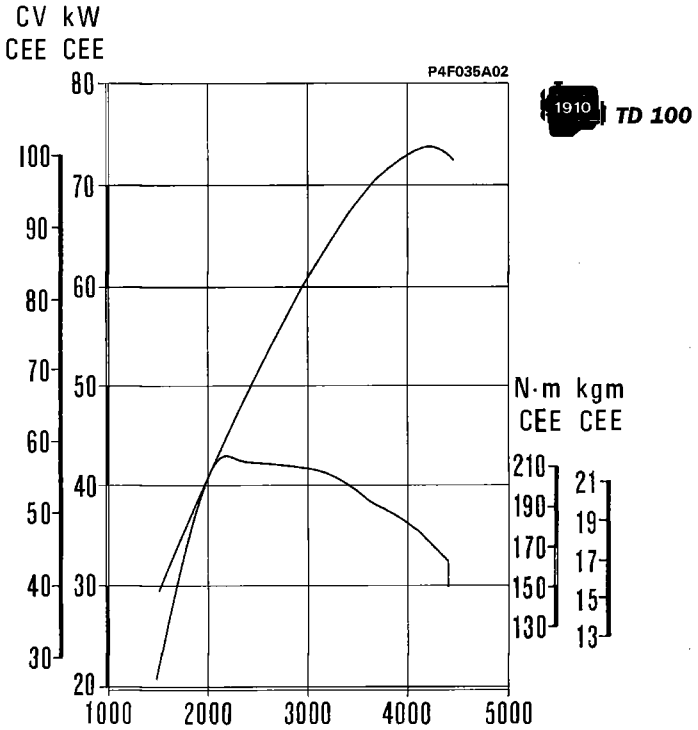

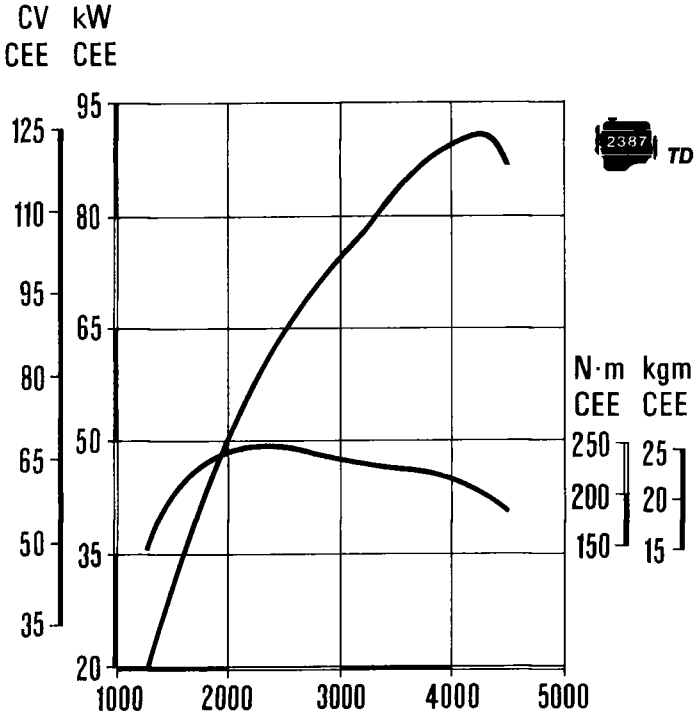

Test bench cycles of overhauled engines

During the bench test of the overhauled engine it is not advisable to run the engine at maximum speed, but to stick to the data given in the table; complete the running in of the engine in the vehicle.

Test speed (rpm)	Time in minutes	Load on the brakes
800÷1000	10′	no load
1500	10′	no load
2000	10′	no load

Engine power curves obtained by EEC method

The power curves illustrated, can be obtained with the engine overhauled and run in, without a fan, with an exhaust silencer and air filter fitted, at sea level.

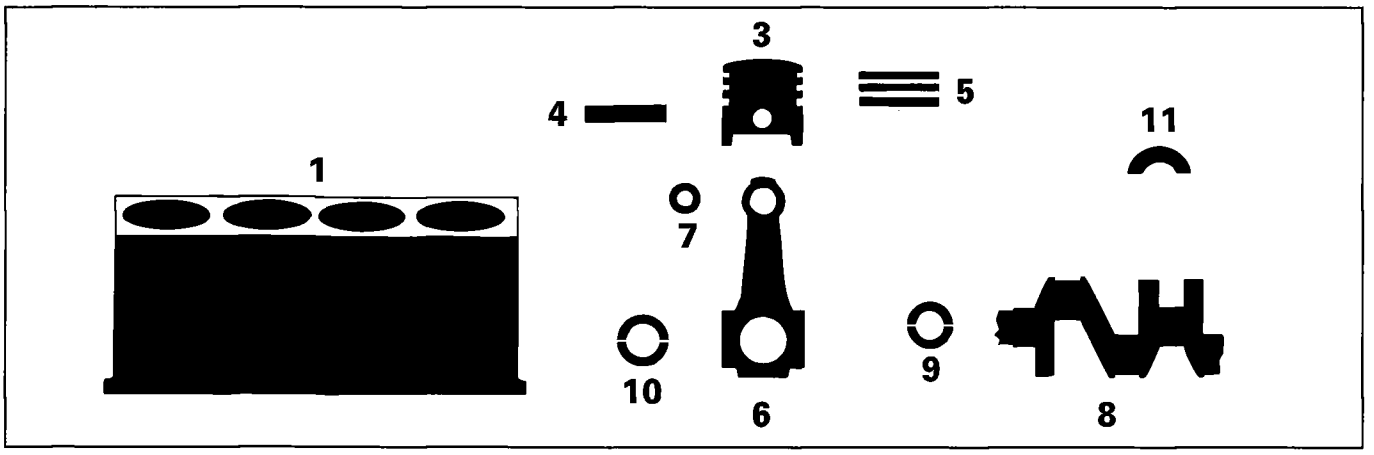

DESCRIPTION			1910 TD	2387 TD
			Values in mm	
1 Main bearing supports	L		21,720 ÷ 21,800	
	Ø		56,705 ÷ 56,718	63,705 ÷ 63,718
Cylinder bore	Ø	A	82,000 ÷ 82,010	
		B	82,010 ÷ 82,020	
		C	82,020 ÷ 82,030	
3 Piston	X		10	
	Ø	A	81,930 ÷ 81,940	
		C	81,940 ÷ 81,950	
		E	81,950 ÷ 81,960	
	Ø FIAT		0,4	
3-1	Piston projection		0,637 ÷ 1,162	
3	Diff. in weight between pistons		± 5 g	
3-1	Piston Cylinder bore		0,060 ÷ 0,080	

DESCRIPTION			1910 TD	2387 TD
			Values in mm	
3	Gudgeon pin housing	Ø	25,991 ÷ 25,996	
3	Piston ring grooves	1	2,675 ÷ 2,705 (*)	
		2	2,010 ÷ 2,030	
		3	3,020 ÷ 3,040	
4	Gudgeon pin	Ø	25,982 ÷ 25,987	
		Ø FIAT >	0,2	
4-3	Gudgeon pin - Housing		0,004 ÷ 0,014	
5	Piston rings	1	2,575 ÷ 2,595 (**)	
		2	1,970 ÷ 1,990	
		3	2,975 ÷ 3,010	
		Ø FIAT >	0,4	
5-3	Piston rings Piston ring grooves	1	0,080 ÷ 0,130 (**)	
		2	0,020 ÷ 0,060	
		3	0,010 ÷ 0,065	
5-1	Opening at end of piston rings in cylinder bore	1	0,200 ÷ 0,400	
		2	0,250 ÷ 0,500	
		3	0,250 ÷ 0,500	

(*) Measured at the 79 mm diameter

(**) Measured 1.5 mm from the outside edge

Copyright by Fiat Auto

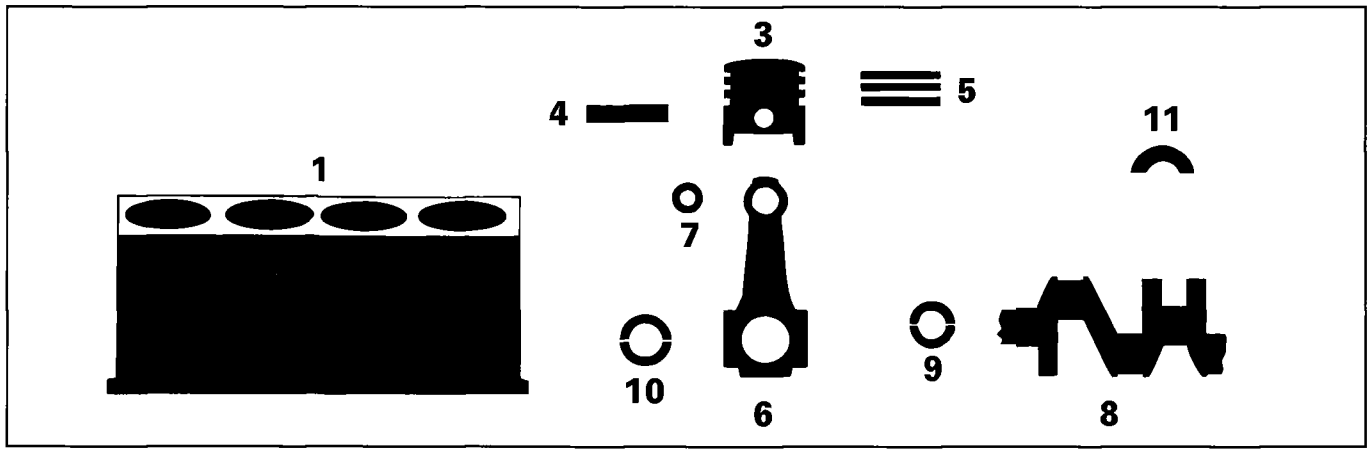

DESCRIPTION			1910 TD	2387 TD
			Values in mm	
6	Small end bush or pin housing	Ø1	28,939 ÷ 28,972	
	Big end bearing housing	Ø2	53,897 ÷ 53,909	
6	Difference in weight between con rods		± 2,5 g	
7	Small end bush	Ø1	29,018 ÷ 29,038	
		Ø2	26,006 ÷ 26,012	
4-7	Gudgeon pin Small end bush		0,019 ÷ 0,030	
7-6	Small end bush Bush housing		0,046 ÷ 0,099	
8	Main journals	Ø1 A	52,994 ÷ 53,000	59,994 ÷ 60,000
		Ø1 B	52,988 ÷ 52,994	59,988 ÷ 59,994
		Ø1 C	52,982 ÷ 52,988	59,982 ÷ 59,988
	Crank pins	Ø2 A	50,799 ÷ 50,805	
		Ø2 B	50,793 ÷ 50,799	
		Ø2 C	50,787 ÷ 50,793	
		L	26,575 ÷ 26,625	

			1910 TD	2387 TD
DESCRIPTION			Values in mm	
9	Crankshaft bearings	L A	1,836 ÷ 1,840	
		L B	1,839 ÷ 1,843	
		L C	1,842 ÷ 1,846	
		Ø FIAT <	0,254 - 0,508	
9–8	Crankshaft bearing - Main journals		0,025 ÷ 0,052	
10	Big end bearings	L A	1,527 ÷ 1,531	
		L B	1,530 ÷ 1,534	
		L C	1,533 - 1,537	
		Ø FIAT <	0,254 - 0,508	
10–8	Big end bearings - Main journals		0,030 ÷ 0,056	
11	Thrust washers	S	2,342 ÷ 2,358	
		S FIAT >	0,127	
11–8	Crankshaft end float		0,059 ÷ 0,179	

Copyright by Fiat Auto

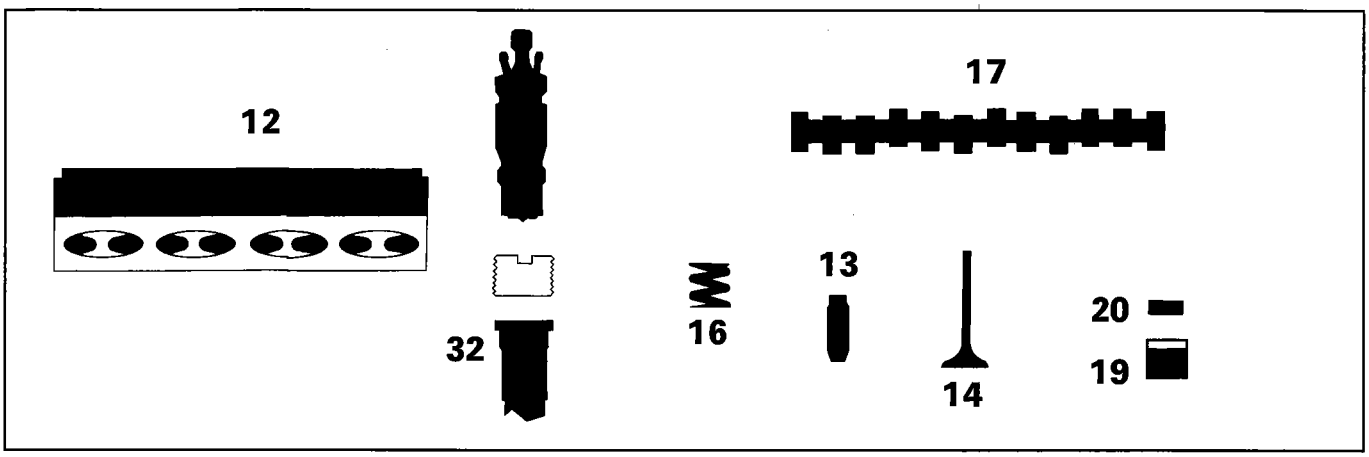

DESCRIPTION		1910 TD	2387 TD
		Values in mm	
Valve guide bore in cylinder head	Ø	13,950 ÷ 13,977	
Valve seats	α (intake)	45° ± 5′	
	α (exhaust)	45° ± 5′	
	L	about 2,7	
Camshaft supports (12)	Ø	26,045 ÷ 19,070	
	L (*)	19,100 ÷ 19,150	
Tappet housing	Ø	37,000 ÷ 37,025	
Valve guide (13)	$Ø_1$	8,022 ÷ 8,040	
	$Ø_2$	14,010 ÷ 14,030	
	$Ø_2$ FIAT >	0,05 - 0,10 - 0,25	

(*) Front cap measurement

DESCRIPTION			1910 TD	2387 TD
			Values in mm	
13-12	Valve guide Bore in cylinder head		0,033 ÷ 0,080	
14	Valve	Ø1	7,974 ÷ 7,992	
		Ø2	37,30 ÷ 37,60	
		α	45°30′ ± 7′	
		Ø1	7,974 ÷ 7,992	
		Ø2	30,90 ÷ 31,20	
		α	45°30′ ± 7′	
14-13	Valve - Valve guide		0,030 ÷ 0,066	
16	Valve spring	P1	36,7 ÷ 39,6 daN	
		H1	36	
		P2	56 ÷ 61 daN	
		H2	26,5	
17	Camshaft bearings	Ø	26,000 ÷ 26,015	
		L	19,250 ÷ 19,330	
17-12		radial	0,030 ÷ 0,070	
		axial	0,100 ÷ 0,230	
17	Cam lift		8,5	
			8,5	
19	Tappet	Ø	36,975 ÷ 36,995	
19-12	Tappet - Cylinder head		0,005 ÷ 0,050	

Copyright by Fiat Auto

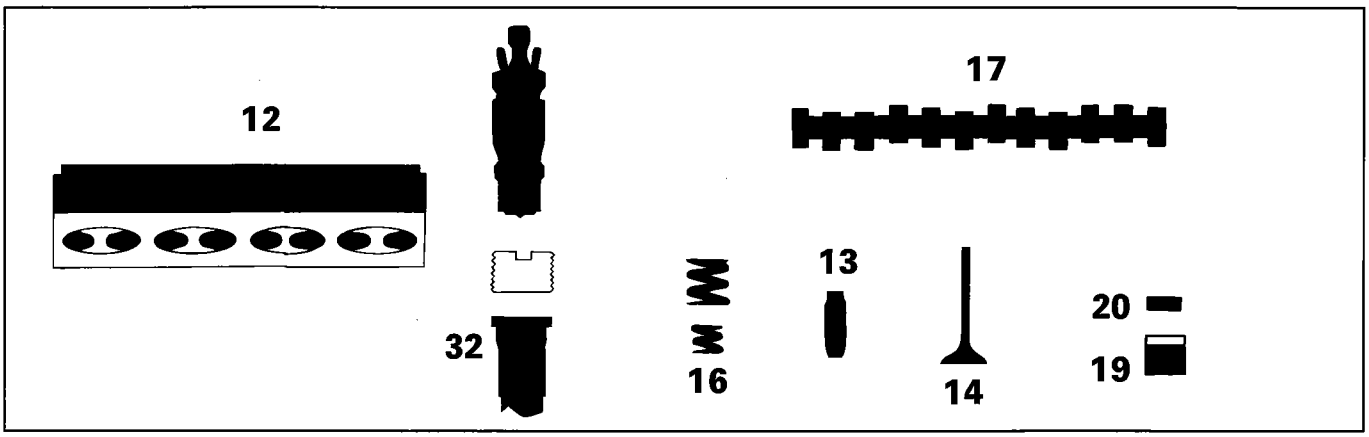

	1910 TD	2387 TD
DESCRIPTION	Values in mm	
20 Shim S (0,05)	3,25 ÷ 4,70	
17-20 clearance for timing check	0,50	0,50
17-20 operational clearance	0,30 ± 0,05	0,35 ± 0,05
32-12 Variation between ante-chamber plane and cylinder head plane	- 0,150 ÷ -0,300	

TIMING DIAGRAMS

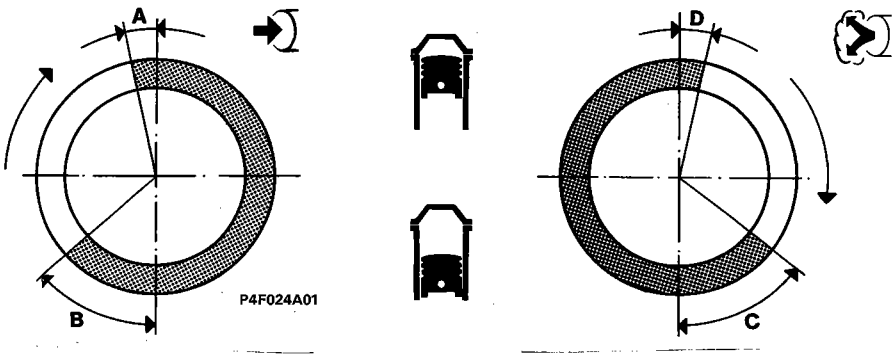

Timing angles	A	Inlet	opens before TDC	6°
	B		closes after BDC	26°
	C	Exhaust	opens before BDC	26°
	D		closes after TDC	6°

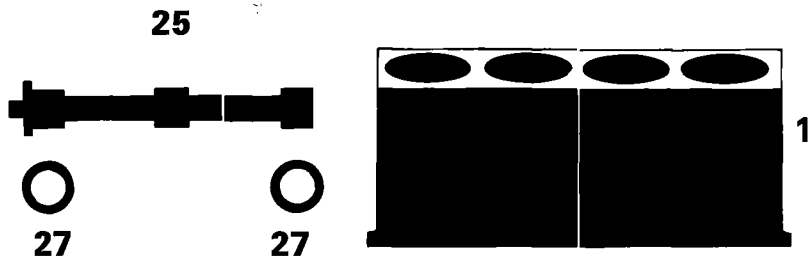

2387 TD

DESCRIPTION			Values in mm
25	Counter balance shafts		n° 1
	Shaft operated		through oil pump driven gear
27	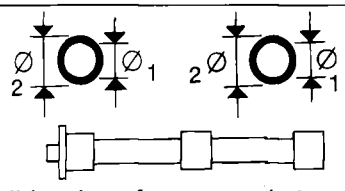 Ball bearings for counter balance shafts	Ø1	19,900 ÷ 20,000
		Ø2	46,989 ÷ 47,000
25	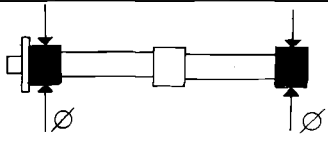 Counter balance shaft bearings	Ø	19,980 ÷ 19,993
1	Bearing seats in cylinder block	Ø	46,975 ÷ 47,000
27-1	Ball bearings Cylinder block seats		+0,011 ÷ – 0,025
25-27	Shaft bearings Ball bearings		+0,020 ÷ – 0,003

Copyright by Fiat Auto

	1910 TD
LUBRICATION	Values in mm
Engine lubrication system	forced circulation via lobe gear pump with cartridge filter in series
Oil pump	lobe gears
Pump operated	through crankshaft
Oil pressure relief valve	incorporated in the crankshaft front cover
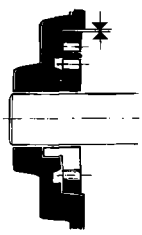 between pump casing housing and driven gear	0,080÷0,186
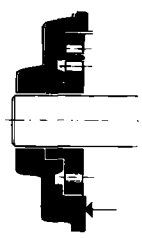 between the upper side of the gears and the pump cover	0,025÷0,056
Full flow filter	cartridge
Insufficient oil pressure sender unit	electrical
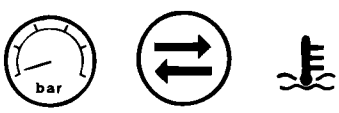 Operating pressure at a temperature of 100°C	idling > 2 bar at 4000 rpm > 5,5 bar
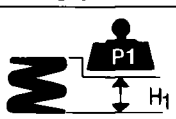 P_1	6,27÷7,06 daN
Oil pressure relief valve spring H_1	36

	2387 TD
LUBRICATION	Values in mm
Engine lubrication system	forced feed, via geared pump with cartridge filter in series
Oil pump	geared, located in the crankshaft front cover
Pump operated	through chain driven by the crankshaft
Oil pressure relief valve	incorporated in the crankshaft front cover
between the edge of the gears and the pump casing	0,110 ÷ 0,180
between the upper side of the gears and the pump cover	0,016 ÷ 0,086
Full flow filter	cartridge
Insufficient oil pressure sender unit	electrical
between drive gear and driven gear	0,30
Operating pressure at a temperature of 100°C	when idling > 2 bar at 4000 rpm > 5,5 bar
Oil pressure relief valve spring — P_1	11,73 ÷ 12,51 daN
Oil pressure relief valve spring — H_1	35

COOLING SYSTEM

		1910 TD 75	1910 TD 100	2387 TD
Cooling circuit		coolant circulation via centrifugal pump, radiator and two speed electrical fan operated by thermostatic switch		
Water pump operation		through belt		
Thermal switch to engage fan		1st speed		2nd speed
		86°÷90°C		90°÷94°C
	stop	81°÷85°C		85°÷89°C
Engine coolant thermostat	opening	78°÷82°C		
	max opening	86°÷90°C		
	valve travel	⩾7,5 mm		
Fitting clearance between impeller vanes and pump casing		0,53÷1,37 mm		–
Pressure for checking rad. water tightness		0,78 bar		
Pressure for checking calibration of exhaust spring on expansion tank cap		0,78 bar		

FUEL SYSTEM

Firing order	1 - 3 - 4 - 2		1 - 2 - 4 - 5 - 3
Rotary type injection pump	Bosch VER-679	Lucas DPC-FT09	Bosch VER-560
Nozzle holder type	Bosch KCA 30S 41	LCD-011R02AA1 (*) LCR-67342	Bosch VER SV 0.216.138
Nozzle type	Bosch DN 0 SD 321	Lucas RDN-SDC6888D	Bosch DN 12 SD 290
Injector setting pressure	150÷158 bar	143÷150 bar (●) 138÷150 bar (●●)	150÷158 bar
Injection pump timing: pumping piston travel for cylinder n° 1 at TDC (compression stroke)	0,92 mm	Electronic adjustment	0,75 mm
Engine idle speed	830÷870 rpm		
Maximum free running engine speed rpm	5000÷5100	4920÷5020	5050÷5150

(*) Specific for instrument injector fitted on cylinder n° 1
(●) New injector
(●●) Injector already bedded in

DATA FOR CHECKING BOSCH INJECTION PUMP TYPE VE R 679

GENERAL TEST CONDITIONS

- Test oil: ISO 4113
- Temperature of test oil: 45° ± 1°C (reflux outlet ●)
- Pump entry pressure: 0,35 bar
- Rotation: clockwise

SPECIFIC TEST CONDITIONS

- Bosch injectors 1.688.901.022
- Injectors: Bosch 1.688.901.922 (DNO SD 1510) set at 130 ÷ 133 bar
- Piping: 2x6x450 mm.

Type of check		Adjustment lever position	Rotation speed rpm	Advance check mm	Transfer pressure bar	Capacity per element mm³/cycle	Max discr. btwn ind. flow rates mm³/cycle	Reduction of total travel mm
Advance	1	Max	1000	2,4÷3,8	5,4÷6,4	–	–	–
	2	Max	1500	5,1÷6,3	6,8÷7,8	–	–	–
	3	Max	2100	8,2÷9,6	8,3÷9,3	–	–	–
Capacity	4	Max	600	–	–	39,3÷43,9	–	–
	5	Max	1000	–	–	40,3÷44,9	–	–
	6	Max	1500	–	–	41÷45	⩽2,5	–
	7	Max	2100	–	–	41,3÷45,9	–	–
	8	Max	2400	–	–	26,2÷36,2	–	–
	9	Max	2600	–	–	8,4÷18,4	–	–
	10	Max	2800	–	–	⩽3	–	–
Starting (enrichment)	11	Max	100	–	–	50÷80	–	–
End of enrichment	12	Max	400	–	–	52÷72	–	–
	13	Max	525	–	–	55÷65	–	–
Reflux cap. (●)	14	Max	600	–	–	15÷31 l/h	–	–
	15	Max	2100	–	–	20÷50 l/h	–	–
Idling	16	Min	425	–	–	10,3÷18,3	⩽2,5	–
Residual flow rate	17	Min	500	–	–	⩽3	–	–
Stop (●●)	18	Min	425	–	–	⩽3	–	–
Delay device (LFB)	19	1500	–	–	P. MAX (0,2±0,1)	Q. MAX (10±1)	–	–
	20	1500	–	–	–	–	–	0,7÷0,9

Fixed advance (after engine TDC) = 0,92±0,005 mm
Electrical stop control : minimum operating voltage 8 V. Rated voltage 11÷13 V

Maximum free running engine speed : 5050±50 rpm.
Engine idle speed: 850±20 rpm.
(●) Fuel return from the pump to the tank.
(●●) To be carried out with the electrical stop control switched off.

Copyright by Fiat Auto

LUCAS FT09 INJECTION PUMP TEST DATA FOR 1910 TD 100 ENGINE

GENERAL TEST CONDITIONS
- Test oil: ISO 4113 (SHELL S-9365)
- Temperature of test oil: 40° ± 1°C
- Injectors ISO 9008-025A
- Injector setting 130÷133 bar
- Injectors RDNOSDC 6876
- Fuel supply pressure. 0.1 bar
- Direction of rotation. clockwise (seen from control side)
- Injection piping: 2,5×6×330 mm
- Max free running engine speed: 5000±50 rpm
- Engine idle speed 850±20 rpm
- Fitting: 0±1° with cyl. n° 1 at TDC

Type of check or adjustment	Op N°	Adjustment lever position	Rotation speed rpm	Average capacity per cyl. mm³/cycle	Advance check α°	Max. discr. btwn flow rates mm³/cycle	Operations or checks to be carried out
Filling and bleeding	1	Max	0	–	–	–	Fill the pump with test fluid through the connector on the cover
Electrical supply	2	Max	0	–	–	–	With supply stablized at 11V the control unit and the interface
Advance instrument setting	3	Max	0	–	0	–	Adjust acting on the potentiometer located on the reader
Hydraulic continuity check	4	Max	1000	–	–	–	Let the pump run for 3 minutes checking that thereis no air in the fluid
Let oil reach op. temp.	5	Max	2000	–	–	–	Stabilize the temp. at 40÷40.5 °C (pump outlet)
Dynamic fitting	6	Max	1500	–	6°	–	Supercharging pressure 1 bar Act on variable pick-up
Max free running check	7	Max	2530	19±4	–	4	Supercharging pressure 1 bar
Regulator intervention check	8	Max	2330	405±4	–	4	Supercharging pressure 1 bar
Max flow rate check	9	Max	2100	56,5±2	7,5±0,5	4	Supercharging pressure 1 bar
Max flow rate check	10	Max	1250	55,4±2	4,5±0,5	4	Supercharging pressure 1 bar
Supercharging operation start	11	Max	750	40,2±2,5	1,5±0,5	4	Supply pressure 0,15 bar
Supercharging gradient	12	Max	750	Q12-Q11 =11±2	0	4	Supercharging pressure 0,45 bar

Type of check or adjustment	Op. N°	Adjustment lever position	Rotation speed rpm	Av. capacity per cyl. mm³/-cycle	Advance check α°	Max. discr. btwn flow rates mm³/cycle	Ops. or checks to be carried out
Max capacity check	13	Max	750	55,0±3	0	–	Supercharging pressure 1 bar
Max capacity check	14	Max	450	35,0±4	0	–	Supercharging pressure 0 bar
Max capacity check	15	Max	100	42,0±8	0	–	Supercharging pressure 0 bar
Idle setting	16	Min	450	6,5±2	0	4	Pull specific levers
Idle check when cold	17	Min	450	12,0±2	0	4	Release specific levers
Regulator status	18	Min	400	(Q16+9)±4	0	4	Levers pulled
Anti-stall capacity	19	Min	450	4,5±1,3	0	4	Pull STOP levers
Recirculation capacity	20	Max	2100	10÷40 l/h	0	–	Supercharging pressure 1 bar
Supply stop	21	Max	400	≤3,0	0	–	Remove the supply to the electrostop

Copyright by Fiat Auto

DATA FOR CHECKING BOSCH INJECTION PUMP TYPE VE R 560

GENERAL TEST CONDITIONS
- Test oil: ISO 4113
- Temperature of test oil: 45°±1°C (reflux outlet ●)
- Pump entry pressure: 0,35 bar
- Rotation - clockwise

SPECIFIC TEST CONDITIONS
- Bosch injectors 1.688.901.022
- Injectors: Bosch 1.688.901.922 (DNO SD 1510) set at 130÷133 bar
- Piping: 2×6×450 mm
- Control panel type HM5-1-1

Type of check	Rotation speed rpm	Advance check mm	Uist voltage mV	Capacity per element mm³/cycle	Max. disc. btwn ind. flow rates mm³/cycle	Duty cyle TV%
Advance	500	4,8÷6,8	3000	–	–	0
	1250	6,6÷8,2	3000	–	–	0
	2250	⩽ 3,0	1850	–	–	100
	2250	9,4÷10,2	3000	–	–	0
Capacity	100	–	3290	48÷64	–	100
	400	–	1850	3,7÷8,3	⩽ 3	100
	500	–	3000	50,7÷55,3	–	0
	1250	–	2310	33÷36	⩽ 3	0
	2250	–	3000	61,4÷65,4	–	0
Reflux capacity (●)	2250	–	3000	20÷50 l/h	–	0
Stop (●●)	1000	–	3000	⩽ 3	–	0

Fixed advance = 0,75±0,05 mm after T.D.C.
Electrical stop control: minimum operating voltage 8V. Rated voltage 11÷13V
(●) Fuel return from the pump to the tank.
(●●) To be carried out with the electrical stop control switched off.

SUPERCHARGING Turbocharger operated by exhaust gases with waste-gate valve and air-to-air exchanger (intercooler)

	1910 TD	2387 TD
Turbocharger type	Garrett GT 15	IHI VL6
Maximum supercharging pressure	1,05 bar	

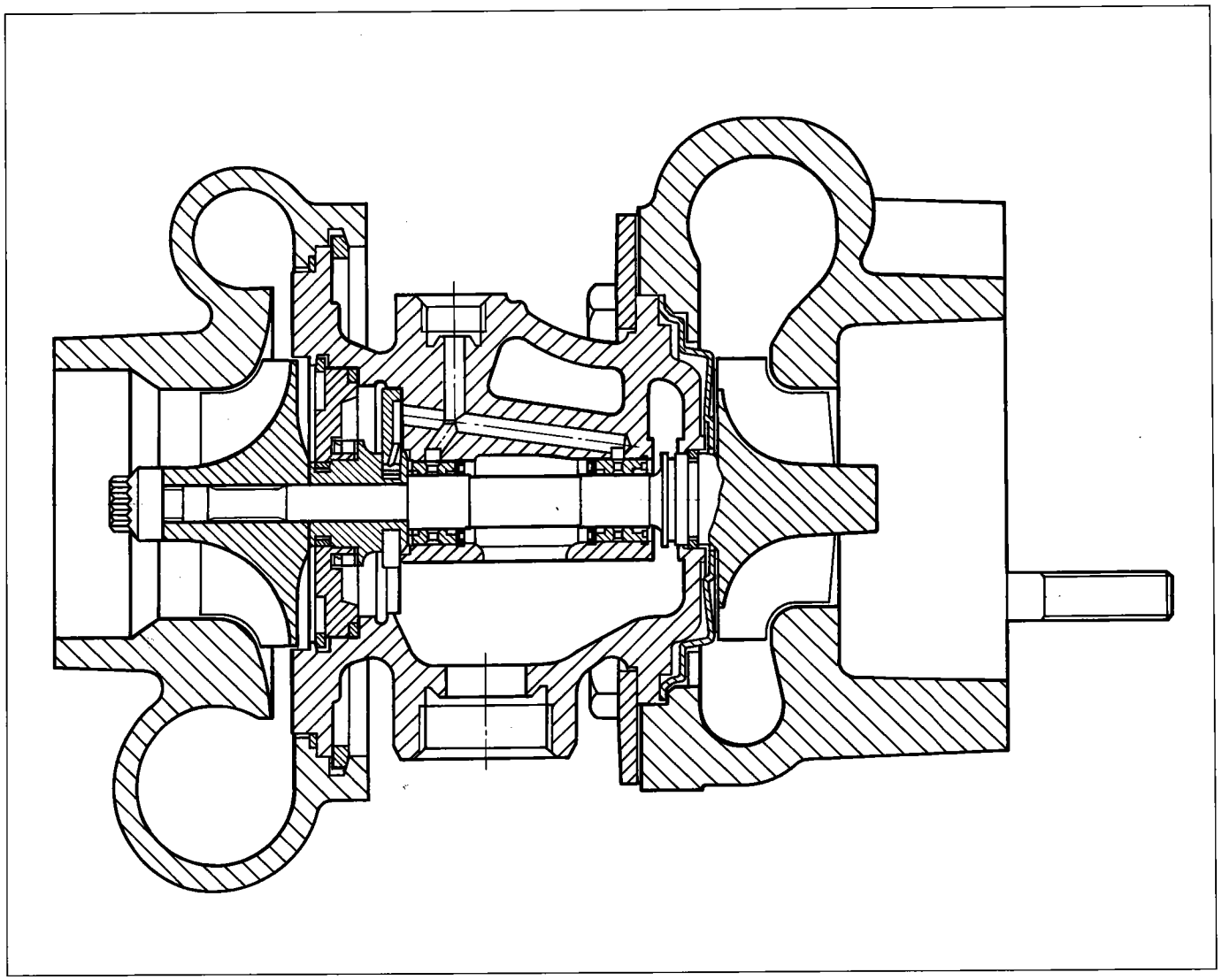

P4A046A01

CROSS SECTION OF TURBOCHARGER

Copyright by Fiat Auto

		1370 12V	1581 16V	1747 16V	1910 TD	1998 20 v	2387 TD
		Values in mm					
Type		dry, single plate with bearing					
Operating mechanism		diaphragm spring					
Spring loading	daN	360	400	500	485	600	
Lining	Ø1	190	200	215	215	228,6	
	Ø2	130	137	145	145	155	
Distance between pedal in end of travel position and rest position		163				136	
Clutch release		mechanical				hydraulic	
Clutch pump operation	Ø	–				16,05 (3/4")	
Operating cylinder	Ø	–				25,4 (1")	

		1370 12V	1581 16V	1747 16V	1998 20V
		1 3 5 / 2 4 R			
	Type	C.514.5.13	C.513.5.13	C.510.5.17	C.510.5.21
GEARBOX					
Synchronizers	spring ring (Porsche type)	–			
	baulk ring type	1 3 5 / 2 4			
Gears	straight toothed	R			
	helical toothed	1 3 5 / 2 4			
Gear ratios	1	3,909			3,545
	2	2,158	2,238		
	3	1,480	1,444	1,520 (1,444) ●	1,520
	4	1,121	1,029	1,156 (1,029) ●	1,156
	5	0,902	0,872 (0,838) ●	0,946 (0,872) ●	0,919
	R	3,818	3,909		

(●) For specific markets

		1370 12V	1581 16V	1747 16V	1998 20V
DIFFERENTIAL					
Ratio crown wheel & pinion reduction		4,071 (14,57)	3,823 (17/65) (3,765)●	3,562 (16/57) (3,353)●	3,562 (16/57)
Ratio at the wheels	1	15,914	14,944 (14,717)●	13,924 (13,107)●	12,627
	2	8,786	8,556 (8,426)●	7,972 (7,504)●	7,972
	3	6,025	5,520 (5,437)●	5,414 (4,842)●	5,414
	4	4,564	3,934 (3,874)●	4,118 (3,450)●	4,118
	5	3,672	3,334 (3,155)●	3,370 (2,924)●	3,273
	R	15,543	14,944 (14,717)●	13,924 (13,107)●	13,924
Differential internal casing bearing		conical roller bearings			
Adjustment of bearing pre-loading		by shims			
Thickness of shims (FIAT)	mm 0,05	–	1,70÷2,60		
	mm 0,10	2,00 ÷ 3,00	–		
Interference to obtain exact bearing pre-loading	mm	bearings not pre-loaded = 0,12 bearings pre-loaded (350 daN) = 0,08			
Clrnce between planet & satellite gears	mm	⩽ 0,10			
Adjustment of clrnce btwn planet/sat. gears		no adjustment is carried out	by shims	no adjustment is carried out	
Thickness of shims (FIAT)	mm 0,05		0,80 ÷ 1,25	–	

(●) For specific markets

		1910 TD 75	1910 TD 100	2387 TD
		1 3 5 / 2 4 R		
	Type	C.510.5.17		C.530.5.31
GEARBOX				
Synchronizers	spring ring (Porsche type)	–		
	baulk ring type	1 3 5 / 2 4		
Gears	straight toothed	R		
	helical toothed	1 3 5 / 2 4		
Gear ratios	1	3,909		3,800
	2	2,238		2,235
	3	1,444		1,360
	4	1,029		0,971
	5	0,838	0,767	0,763
	R	3,909		3,545
	Ratio crown wheel and pinion reduction	3,353 (17/57)		3,176 (17/54)

DIFFERENTIAL

		1910 TD 75	1910 TD 100	2387 TD
Ratio at the wheels	1	13,107		12,069
	2	7,504		7,098
	3	4,842		4,319
	4	3,450		3,084
	5	2,810	2,572	2,423
	R	13,107		11,259
Differential internal casing bearing		conical roller bearings		
Adjustment of bearing pre-loading		by shims		
Thickness of shims	mm 0,05	1,70÷2,60		1,25÷1,60
Bearing rolling torque		–		0,10÷0,14
Interference to obtain exact bearing pre-loading	mm	Bearings not pre-loaded = 0,12 bearings pre-loaded (350 daN) = 0,08		–
Clearance between planet & sat. gears	mm	⩽ 0,10		0,10÷0,20
Adjustment of clrnce btwn planet/sat. gears		no adjustment is carried out		by shims
Thickness of shims	(0,05) mm	–		1,8÷2,2

AISIN AUTOMATIC TRANSMISSION

ENGINE TYPE	1581 16v
Gears	❷ ❷ ❷ ❹ ❷
Gear ratios — ❷ ○ ○ ○ ○	2,807
Gear ratios — ○ ❷ ○ ○ ○	1,479
Gear ratios — ○ ○ ❷ ○ ○	1,000
Gear ratios — ○ ○ ○ ❹ ○	0,735
Gear ratios — ○ ○ ○ ○ ❷	2,769
Idler ratio	1,019 (54/53)
Torque converter ⌀ mm	216
X Ratio (multiplication) engine torque	2,150
Quantity of oil — total, with gearbox, converter, radiator and pipes empty	6 litres (5,4 kg)
Quantity of oil — replacement only	4,3 litres (3,9 kg)
GI/2	

DIFFERENTIAL

Crown wheel and pinion reduction	3,505 (82/23)
Final drive ratio	3,633 (54/53×82/23)
Ratio at the wheels — ❷ ○ ○ ○ ○	10,197
Ratio at the wheels — ○ ❷ ○ ○ ○	5,373
Ratio at the wheels — ○ ○ ❷ ○ ○	3,633
Ratio at the wheels — ○ ○ ○ ❹ ○	2,670
Ratio at the wheels — ○ ○ ○ ○ ❷	10,059

Copyright by Fiat Auto

			1370 12V, 1581 16V, 1910 TD 75	(*) 1581 16V, 1910 16V, 1910 TD 100
FRONT BRAKES			Values in mm	
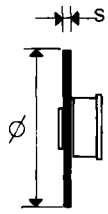	Disc	ø	257	
		s	11,80 ÷ 12,10	19,80 ÷ 20,10
		s	11,10	18,55
		s < allowed	10,20	18,20
	Brake pads	s < allowed	1,5	
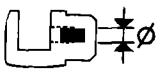	Caliper	ø	54	
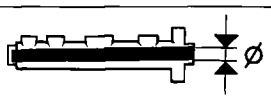	Master cylinder (pump)	ø	22,225 (7/8")	
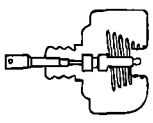	Brake servo		Iso-Vac 8" pneumatic vacuum servo acting on all four wheels	
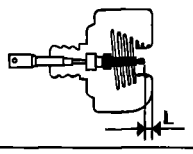	Distance of hydralic piston push rod from master cylinder support plate	L	22,45 ÷ 22,65	

(*) For version with auto. trans.

REAR BRAKES				
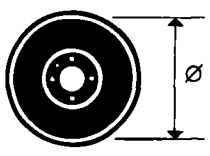	Drum	ø	203,10÷203,40	
		ø	204,10	
		ø > allowed	204,70	
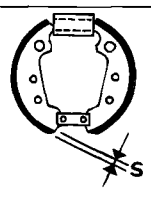	Shoes	s < allowed	1,5	
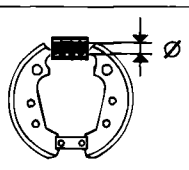	Wheel cylinders	ø	22,00	
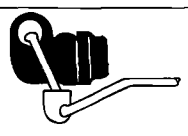	Reduction ratio	Pressure regulators	0,36	–
		Load proportioning valves	–	0,36

FRONT BRAKES

			1370 12V	1581 16V / 1747 16V / 1910 TD
			Values in mm	
Disc		Ø	257	
	s		19,80 ÷ 20,10	
	s		18,55	
	s	allowed	18,20	
Brake pads	s	allowed	1,5	
Caliper		Ø	54	
Master cylinder (pump)		Ø	22,225 (7/8")	
Servo brake			Iso-Vac 8" pneumatic vacuum servo acting on all four wheels	
Distance of hydraulic piston push rod from master cylinder support plate		L	22,45 ÷ 22,65	

REAR BRAKES

Drum	Ø		203,10÷203,40	228,30÷228,60
	Ø		204,10	229,30
	Ø	allowed	204,70	230,00
Shoes	s	allowed	1,5	
Wheel cylinders		Ø	22,00	
Load proportioning valve			acting on rear wheels	
		Ratio (reduction)	0,36	

Copyright by Fiat Auto

			1998 20V	2387 TD
FRONT BRAKES			Values in mm	
Disc		Ø	283,800÷284,200	
	s		21,800÷22,100	
			20,55	
		allowed	20,20	
Brake pads	s	allowed	1,5	
Caliper		Ø	54	
Master cylinder (pump)		Ø	23,81 (15/16")	
Servo brake			ISO-VAC 8"+7" pneumatic vacuum servo acting on all four wheels	
Distance of hydraulic piston push rod from master cylinder support plate		L	22,45 ÷ 22,65	

REAR BRAKES

Disc		Ø	240	
	s		10,80 ÷ 11,10	
			10,10	
		allowed	9,20	
Brake pads	s	allowed	1,5	
Caliper		Ø	34	
Load proportioning valve			acting on rear wheels	
Ratio (reduction)			0,36	

ENGINE TYPE	1370 12V 1581 16V 1747 16V 1910 TD	1998 20v	2387 TD
Type	rack and pinion power assisted		
Ratio — no. of turns lock to lock	3	2,9	2,8
Ratio — rack travel	142 ±1,5 mm	137 ±1,5 mm	132 ±1,5 mm
Turning circle (Ø)	10,7	11,1	11,5
Steering angle — outer wheel α_1	31° ± 30′		
Steering angle — inner wheel α_2	38° ± 30′		
Steering col.	with 2 universal joints		

ENGINE TYPE	Pressed steel wheel rim	Pressed steel light alloy	Radial, tubeless type ture	Tyre inflation pressure in bar – Front average load	Front heavy load	Rear average load	Rear heavy load
1370 12V	5½J×14"– 37	6J×15"– 43	175/70 R14 84T 195/55 R15 84V	2,1 bar	2,2 bar	2,3 bar	2,5 bar
1581 16V	5½J×14"– 37 5½J×14"– 43	6J×15"– 43	175/70 R14 84H 185/65 R14 86H 195/55 R15 84V	2,1 bar	2,2 bar	2,3 bar	2,5 bar
1581 16V c.a.	5½J×14"– 43	6J×15"– 43	185/65 R14 86H 195/55 R15 84V	2,1 bar	2,2 bar	2,3 bar	2,5 bar
1747 16V	5½J×14"– 43	6J×15"– 43	185/65 R14 86H 195/55 R15 84V	2,1 bar	2,2 bar	2,3 bar	2,5 bar
1998 20V	-	6J×15"– 49	195/55 R15 84V	2,3 bar	2,5 bar	2,3 bar	2,5 bar
1910 TD 75	5½J×14"– 37	6J×15"– 43	175/70 R14 84T 195/55 R15 84V	2,1 bar	2,2 bar	2,3 bar	2,5 bar
1910 TD 100	5½J×14"– 37 5½J×14"– 37 5½J×14"– 43 5½J×14"– 43	6J×15"– 43	175/70 R14 84T (●) 175/70 R14 84H (■) 185/65 R14 86T (■) 185/65 R14 86H (■)(▲) 195/55 R15 84V	2,1 bar	2,2 bar	2,3 bar	2,5 bar
2387 TD	-	5½×15"– 46	195/55 R15 84V	2,4 bar	2,5 bar	2,3 bar	2,5 bar
SPARE WHEEL (*)	4B×15"– 35	5½×14"– 43 (▲)	185/65 R14 86H (▲) 125/80 R15 95M	4,2 bar			

For the Marea Weekend with a commercial load (1 person + 500 Kg) the inflation pressure for the front tyres is 2.3 bar for all versions excluding those fitted with the 1998 and 2387 TD engine for which it is 2.5 bar, whilst the inflation pressure for the rear tyres is 3 bar irrespectively for all versions.

(*) Speed limit: 80 km/h
(■) Special tyres for the Marea version
(■) Special tyres for the Marea Weekend
(▲) For the TAXI version

Service News

Copyright by Fiat Auto

2/97

Fiat Auto S.p.A
D.M.C. - M.P.S. - Servizi Post Vendita
Assistenza Tecnica

Fiat Marea

version: all versions

44

05.97

4450 A 401 AA **REAR WHEEL TOE IN**

correction of toe in value given in the Service Manual

OPERATIONS IN THE NETWORK

As a correction to the information given on page 63 of Section 00.44 of the Service Manual, Print no. 506.761, we wish to point out that the exact value of the rear wheel toe in is as follows

+ 2 ± 2mm rather than - 4+0

Please be so kind as to make a note, by hand, of the correct figures in the above mentioned publication

WHEEL GEOMETRY

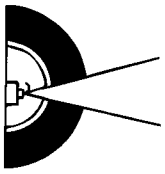

		unladen car (■)
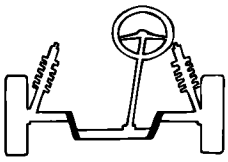 Front suspension	camber (**) 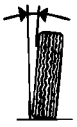	– 36′ 24″ ± 30′
	caster (**) 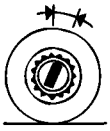	1° 57′ ± 30′
	toe in 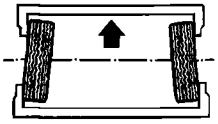	-1 ÷ 1 mm
	front wheel offset ▲	0°
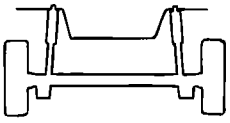 Rear suspension	camber (**)	– 0° 45′ ± 30′
	toe in (**) 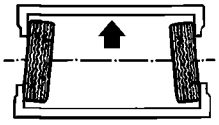	2 ± 2 mm
	rear wheel thrust angle ▲	0°

(**) Angles cannot be adjusted
(■) With tyres inflated to the correct pressure and vehicle in running order with 5 litres of fuel

(▲) Angular values which cannot be adjusted, used for the correct alignment of the vehicle

00.44

Front suspension independent, Mac Pherson type with lower transverse track control arms anchored to an auxiliary cross member. Offset coil springs and hydraulic, telescopic, double acting shock absorbers. Stabilizer bar connected to the telescopic damper.

Coil springs

ENGINE TYPE		1370 12V	1581 16V	1747 16V	1998 20V
Diameter of wire	mm	12,3±0,05	12,5±0,05 (12,7±0,05)* (12,9±0,05)**	12,7 ± 0,05 (12,9±0,05)*	12,9 ± 0,05
Number of turns		3,75			
Direction of coil		clockwise			
Height of spring released	mm	434	437 (436)* (434)**	436 (434)*	434
Height of spring under a load of: 290 ÷ 353 daN	mm	182	–	–	–
Height of spring under a load of: 312 ÷ 380 daN (330 ÷ 402 daN)* (347 ÷ 423 daN)**	mm	–	182	–	–
Height of spring under a load of: 330 ÷ 402 daN (347 ÷ 423 daN)*	mm	–	–	182	–
Height of spring under a load of: 347 ÷ 423 daN	mm	–	–	–	182
The springs are subdivided into two categories, identifiable by a mark					
yellow (1) for those under a load of: 321,8 daN	height of mm	>182	–	–	–
yellow (1) for those under a load of: 346,3 daNm (366 daN)* (405 daN)**	height of mm	–	>182	–	–
yellow (1) for those under a load of: 366 daN (405 daN)*	height of mm	–	–	>182	–
yellow (1) for those under a load of: 405 daN	height of mm	–	–	–	>182
green (1) for those under a load of: 321,8 daN	height of mm	⩽182	–	–	–
green (1) for those under a load of: 346,3 daNm (366 daN)* (405 daN)**	height of mm	–	⩽182	–	–
green (1) for those under a load of: 366 daN (405 daN)*	height of mm	–	–	⩽182	–
green (1) for those under a load of: 405 daN	height of mm	–	–	–	⩽182

(1) Springs of the same category must be fitted
(*) For vehicles with air conditioning or automatic transmission.
(**) For vehicles with air conditioning and automatic transmission.

Shock absorbers

Type		hydraulic, telescopic, double acting	
Open (start of damping action)	mm	508 ± 2,5	501 ± 2,5
Closed (metal against metal)	mm	361 ± 2,5	354 ± 2,5
Travel	mm	147	

Stabilizer bar

Diameter of stabilizer bar	mm	18

Coil springs

			1910 TD	2387 TD
Diameter of wire		mm	12,9±0,05	12,2±0,05
Number of turns			3,75	
Direction of coil			clockwise	
Height of spring released		mm	434	436
Height of spring under a load of:	347 ± 423 daN	mm	182	-
	374 ± 474 daN	mm	-	182
The springs are subdivided into two categories, identifiable by a mark				
yellow (1) for those under a load of:	405 daN	height of mm	>182	-
	405 daN	height of mm	-	>182
green (1) for those under a load of:	405 daN	height of mm	⩽182	-
	405 daN	height of mm	-	⩽182

(1) Springs of the same category must be fitted.

Shock absorbers

Type: telescopic, double acting		low pressure gas
Open (start of damping action)	mm	508 ± 2,5
Closed (metal against metal)	mm	361 ± 2,5
Travel	mm	147

Stabilizer bar

Diameter of stabilizer bar	mm	17	19

Copyright by Fiat Auto

00.21-27

Rear suspension independent with cast iron spheroid track control arms. Coil springs and shock absorbers with vulcanized bushes. Anti-roll torsion bar. Rigid H auxiliary frame made up of a transverse tubular element and two pressed side members connected to it.

Coil spring

ENGINE TYPE	1370 12V	1581 16V	1747 16V	1998 20V	1910 TD	2387 TD
Diameter of wire mm	12±0,05					
Number of turns	5					
Direction of coil	clockwise					
Height of spring released mm	308,8					
Height of spring under a load of: 268 ÷ 403 daN mm	184					
The springs are subdivided into two categories, identifiable by a mark						
yellow (1) for those under a load of: 335,5 daN height of mm	>184					
green (1) for those under a load of: 335,5 daN height of mm	⩽184					

(1) Springs of the same category must be fitted.

Shock absorbers

Type: telescopic, double acting	low pressure gas
Open (start of damping action) mm	320 ± 2
Closed (metal against metal) mm	223 ± 2
Travel mm	97

Stabilizer bar

Diameter of stabilizer bar mm	17	19	17	19

Front suspension independent, Mac Pherson type with steel track control arms anchored to an auxiliary cross member. Offset coil springs and double acting telescopic shock absorbers. Anti-roll torsion bar.

Coil springs

ENGINE TYPE			1370 12V	1581 16V	1747 16V	1998 20V
Diameter of wire		mm	12,3±0,05	12,7±0,05 (12,9±0,05)*	12,7 ± 0,05 (12,9±0,05)**	13,1 ± 0,05
Number of turns			3,75			
Direction of coil			clockwise			
Height of spring released		mm	434	436 (434)*	436 (434)**	432
Height of spring under a load of:	290 ÷ 253 daN	mm	182	–	–	–
	330 ÷ 402 daN (347 ÷ 423 daN)*	mm	–	182	–	–
	330 ÷ 402 daN (347 ÷ 423 daN)**	mm	–	–	182	–
	364 ÷ 445 daN	mm	–	–	–	182
The springs are subdivided into two categories, identifiable by a mark						
yellow (1) for those under a load of:	321,8 daN	height of mm	>182	–	–	–
	366 daNm (405 daN)*	height of mm	–	>182	–	–
	366 daN (405 daN)*	height of mm	–	–	>182	–
	405 daN	height of mm	–	–	–	>182
green (1) for those under a load of:	321,8 daN	height of mm	⩽182	–	–	–
	366 daNm (405 daN)*	height of mm	–	⩽182	–	–
	366 daN (405 daN)*	height of mm	–	–	⩽182	–
	405 daN	height of mm	–	–	–	⩽182

(1) Springs of the same category must be fitted
(*) For vehicles with automatic transmission and air conditioning
(**) For vehicles with air conditioning

Shock absorbers

Type: telescopic, double acting		low pressure gas	
Open (start of damping action)	mm	508 ± 2,5	501 ± 2,5
Closed (metal against metal)	mm	361 ± 2,5	354 ± 2,5
Travel	mm	147	

Stabilizer bar

Diameter of stabilizer bar	mm	16	17

Copyright by Fiat Auto

Coil springs

			1910 TD	2387 TD
Diameter of wire		mm	12,9±0,05	13,2±0,05
Number of turns			3,75	
Direction of coil			clockwise	
Height of spring released		mm	434	436
Height of spring under a load of:	347 ± 423 daN	mm	182	-
	374 ± 474 daN	mm	-	182
The springs are subdivided into two categories, identifiable by a mark				
yellow (1) for those under a load of:	405 daN	height of mm	>182	-
	405 daN	height of mm	-	>182
green (1) for those under a load of:	405 daN	height of mm	⩽182	-
	405 daN	height of mm	-	⩽182

(1) Springs of the same category must be fitted.

Shock absorbers

Type: telescopic, double acting		low pressure gas
Open (start of damping action)	mm	508 ± 2,5
Closed (metal against metal)	mm	361 ± 2,5
Travel	mm	147

Stabilizer bar

Diameter of stabilizer bar	mm	17	19

Rear suspension independent with track control arms anchored to an auxiliary cross member. Variable flexibility coil springs and stabilizer bar. Gas shock absorbers with low friction coefficient lower bushes.

ENGINE TYPE	370 12V	581 16V	1747 16V	1998 20V	1910 TD	2387 TD

Coil spring

Diameter of wire		mm	12,7±0,05
Number of turns			5
Direction of coil			clockwise
Height of spring released		mm	307
Height of spring under a load of:	324 ÷ 490 daN	mm	184
The springs are subdivided into two categories, identifiable by a mark			
yellow (1) for those under a load of:	407 daN	height of mm	>184
green (1) for those under a load of:	407 daN	height of mm	⩽184

(1) Springs of the same category must be fitted.

Shock absorbers

Type		gas, telescopic, double acting			
Open (start of damping action)	mm	320 ± 2			
Closed (metal against metal)	mm	222 ± 2	223 ± 2	222 ± 2	223 ± 2
Travel	mm	98	97	98	97

Stabilizer bar

Diameter of stabilizer bar	mm	17	19	17	19

	1370 12V	1581 16V	1747 16V	1998 20V
STARTER MOTOR	M. Marelli E80E-12v-0,9 kW	M. Marelli E80E-12v-1KW M. Marelli (*) M70R-12v-1,4 KW (with reduction gear)	M. Marelli M70R-12V-1,4kW (with reduction gear)	
ALTERNATOR	M. Marelli A115I-14V-38/65A M. Marelli A127IR-14V-50/85A (●)	M. Marelli A115I-14V-40/75A M. Marelli A127IR-14V-50/85A(●)		M. Marelli A127IR-14V-50/85A
VOLTAGE REGULATOR	BUILT IN ELECTRONIC			
BATTERY	12V-40Ah-200A	12V-50Ah-250A 12V-60Ah-380A(▲)	12V-50Ah-250A	
IGNITION SYSTEM	Bosch Monomotronic SPI integrated electronic injection/ignition system	Weber-Marelli I.A.W. MPI integrated electronic injection/ignition	HITACHI MPI integrated electronic injection/ignition	Bosch Motronic MPI integrated electronic injection/ignition
IGNITION COIL	Bosch 0.221.503.407	M. Marelli BAE 920 A	HITACHI CM14 - 301	Bosch 0.221.504.006
SPARK PLUGS	NGK BKR 6EKC GOLDEN LODGE 2HLDR CHAMPION RC7BNC FIAT 7GBMSR		NGK BKR 6EKC CHAMPION RC7BMC GOLDEN LODGE 2HLDR FIAT 7GBMSR	FIAT 7GBMSR CHAMPION RC7BMC

(●) For vehicles equipped with air conditioning
(*) North European versions
(▲) For TAXI version only

	1910 TD 75	1910 TD 100	2387 TD
STARTER MOTOR	M. Marelli E 95RL - 12V - 2,2 kW (with reduction gear)		
ALTERNATOR	M. Marelli A115I-14V-38/65A M. Marelli A127IR-14V-50/85A (●)		M. Marelli A115I-14V-40/75A M. Marelli A127IR-14V-50/85A (●)
VOLTAGE REGULATOR	Built in electronic		
BATTERY	12V-60Ah-380A	12V-60Ah-380A 12V-70Ah-450A(▲)	12V-70Ah-450A
PRE-HEATING ELECTRONIC CONTROL UNIT	SIPEA 2904 BITRON 151405.01	BOSCH 0.281.003.004	BOSCH 0.281.003.010
INJECTION ADVANCE ELECTRONIC CONTROL UNIT	–	LUCAS 41000087-101	BOSCH 0.281.001.517
EGR ELECTRONIC CONTROL UNIT	M. Marelli MCR 108	–	–
HEATER PLUGS	BERU 0.100.226.249		

(●) For vehicles equipped with air conditioning
(▲) For TAXI version only

STARTER MOTOR		1370 12V	1581 16V
Type		M. Marelli E80 E-12V-0,9 kW	M. Marelli E80 E-12V-1 kW
Voltage	V	12	
Nominal power	kW	0,9	1
Rotation, pinion side		clockwise	
No. of poles		4	
Field coil		series winding	
Engagement		free wheel	
Operation		solenoid	
End float of armature shaft	mm	0,1 ÷ 0,5	0,1 ÷ 0,45
Data for bench test			
Operating test (*):			
current	A	180	200
speed	rpm	1720	2200
voltage	V	9,5	9,8 ÷ 10
torque developed	daNm	0,37	0,38
Engagement test (*):			
current	A	324	440
voltage	V	7,1	7,6
torque developed	daNm	⩾0,97	⩾1,25
Free running test (*):			
current	A	40	44 ÷ 48
voltage	V	11,4	11,4 ÷ 11,5
speed	rpm	8500 ÷ 9000	11400 ÷ 12300
Relay			
Winding resistance (*)	pull in Ω	0,30 ÷ 0,32	0,32
	hold in Ω	1,2 ÷ 1,3	1,9
Lubrication			
Internal splines and shaft bushes		VS+ SAE 10 W	
Sleeve and intermediate disc		TUTELA MR3	

(*) Data obtained at an ambient temperature of 20°C.

NOTE *When overhauling, it is not advisable to undercut the insulator between the commutator bars*

Wiring diagrams for starter motors

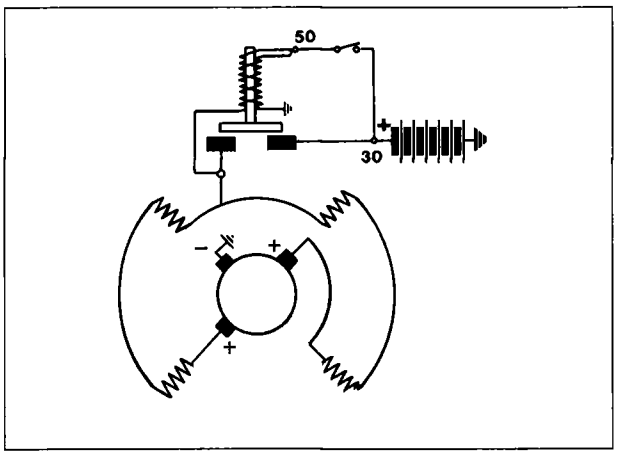

P4F073A01

M. Marelli E80E - 12V - 0,9 kW

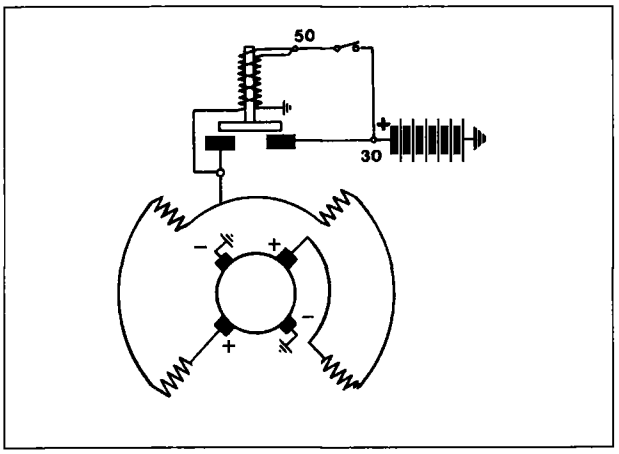

P4F073A02

M. Marelli E80E - 12V - 1 kW

STARTER MOTOR

		(●) 1581 16V, 1747 16V, 1998 20V	1910 TD, 2387 TD
Type		M. Marelli M70R-12V-1,4 kW (with reduction gear)	M. Marelli E95RL-12V-2,2 kW
Voltage	V	12	
Nominal power	kW	1,4	2,2
Rotation, pinion side		clockwise	
No. of poles		4	
Field coil		series	series - parallel
Engagement		free wheel	
Operation		solenoid	
End float of armature shaft	mm	0,1 ÷ 0,5	0,15 ÷ 0,45
Data for bench test			
Operating test (*):			
current	A	360 ÷ 380	600
speed	rpm	1150	1400
voltage	V	8,15	7,9
torque developed	daNm	1,30	1,6
Engagement test (*):			
current	A	680 ÷ 700	1110 ÷ 1150
voltage	V	4,9	4,4 ÷ 4,6
torque developed	daNm	3,11	⩾3,9
Free running test (*):			
current	A	60 ÷ 80	120 ÷ 140
voltage	V	4,9	11
speed	rpm	4040	4500 ÷ 4750
Relay			
Winding resistance (*)	pull in Ω	0,33 ÷ 0,37	0,23 ÷ 0,27
	hold in Ω	1,13 ÷ 1,27	0,93 ÷ 1,07
Lubrication			
Internal splines and shaft bushes		VS+ SAE 10 W	
Sleeve and intermediate disc		TUTELA MR3	

(*) Data obtained at an ambient temperature of 20°C.
(●) Northern European version only
NOTE *When overhauling it is not necessary to under the insulator between the commutator bars*

STARTER MOTOR WIRING DIAGRAMS AND TYPICAL CURVES

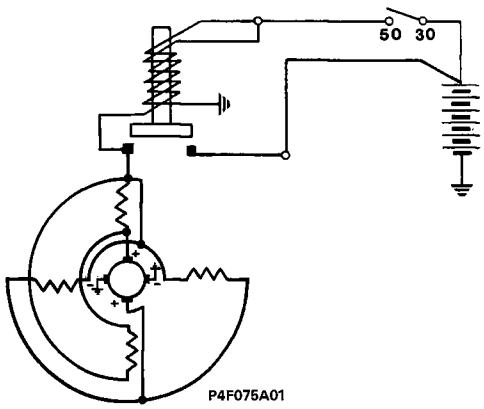

Starter motor wiring diagram M70R - 12V - 1,4 kW (with epicyclic reduction gear)

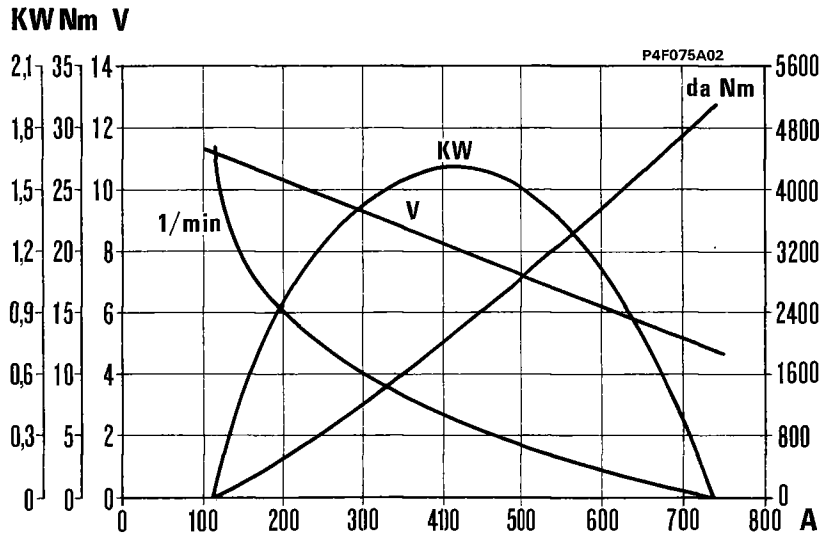

Typical curves for starter motor M. Marelli M70R 12V - 1,4 kW (with epicyclic reduction gear)

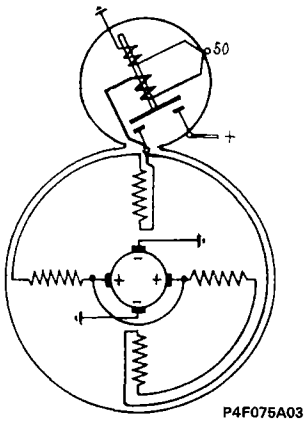

Starter motor wiring diagram M. Marelli E95RL - 12V - 2,2 kW

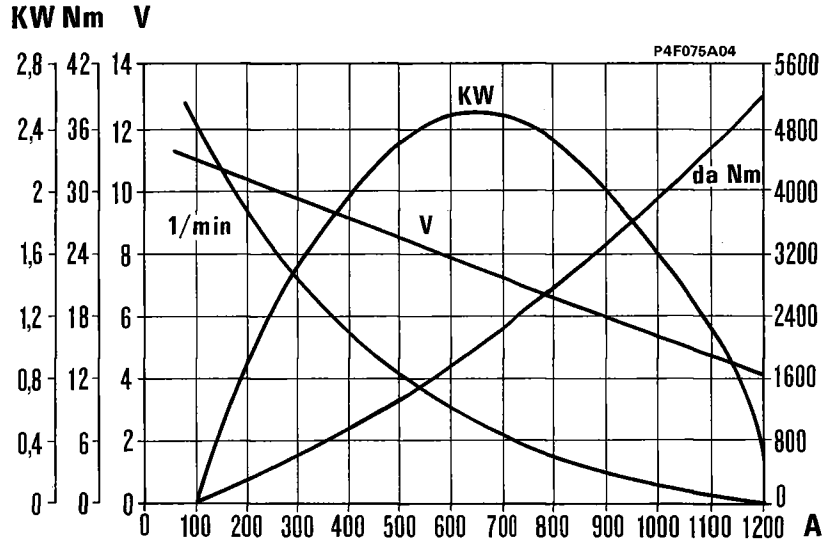

Typical curves for starter motor M. Marelli E95RL - 12V - 2,2 kW

Copyright by Fiat Auto

	1370 12V	1370 12V 1910 TD [illegible] 16V 2387 TD 2387 16V	1998 20V 1910 TD (●) 1581 16V (●) 2387 TD (●) [illegible] 16V (●)

ALTERNATOR

Type		M.Marelli A115I-14V-38/65A	M.Marelli A115I-14V-40/75A	M.Marelli A127IR-14V-50/85A
Nominal voltage	V	14		
Maximum current	A	65	75	85
Nominal current at 1800 rpm	rpm	38	40	50
Nominal current at 6000 rpm	A	65	75	85
Field winding resistance between the slip rings (*)	Ω	2,66 ÷ 2,94		2,47 ÷ 2,73
Direction of rotation (seen from control side)		clockwise		
Diode rectifiers		bridge		

(*) Data obtained at an ambient temperature of 20°C.
(●) For vehicles equipped with air conditioning

VOLTAGE REGULATOR		Built in electronic	
Type		RTM 151 A	RTM 151 B
Alternator speed for test	rpm	7000	
Thermal stabilization current	A	-	
Test current	A	-	
Regulation voltage (*)	V	14,3 ÷ 14,6	

(*) Data obtained at an ambient temperature of 23°C.

Print no. 506.763

Wiring diagram for alternators

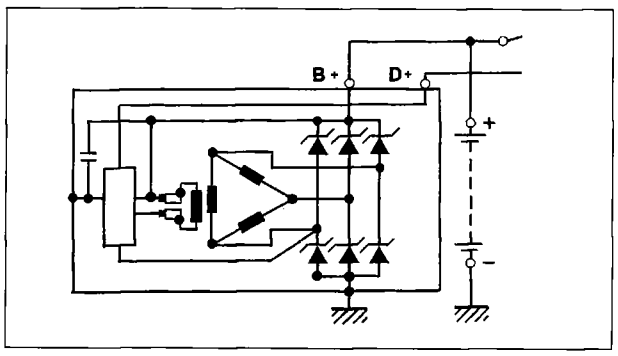

P4F077A01

M. Marelli A115I - 14V - 38/65A
M. Marelli A115I - 14V - 40/75A
M. Marelli A127IR - 14V - 40/85A

Typical curves for voltage regulators

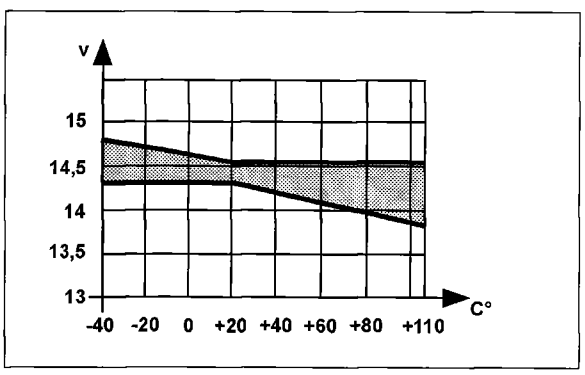

P4F077A02

M. Marelli RTM 151 A

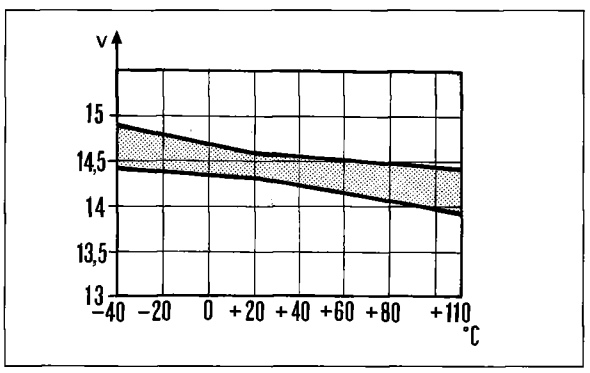

P4F077A03

M. Marelli RTM 151 B

CONTROL MODULE FOR INTEGRATED ELECTRONIC INJECTION/IGNITION

1370 12V

Type	Bosch 0.261.203.868 Bosch 0.261.204.543 (*)
Firing order	1 – 3 – 4 – 2

(*) From chassis n° 13101

IGNITION COIL WITH 4 HIGH TENSION SOCKETS

Make		Bosch
Type		0.221.503.407
Ohmic resistance of primary winding at 20°C	Ω	0,45 ÷ 0,55
Ohmic resistance of secondary winding at 20°C	Ω	12000 ÷ 14600

TDC AND RPM SENSOR

Make and type		Bosch 0.281.002.102
Sensor winding resistance at 20° C	Ω	486 ÷ 594
Distance (gap) between sensor and crankshaft pulley tooth	mm	0,8 ÷ 1,5

ADVANCE ON ENGINE

With engine idling (850 ± 50 rpm)	7° ± 2°

SPARK PLUGS

Make and type		NGK BKR6EKC GOLDEN LODGE 2HLDR CHAMPION RC8BYC (●)
Thread		M 14×1,25
Electrode gap	mm	0,8

(●) Excluding cold countries

INTEGRATED ELECTRONIC INJECTION/IGNITION SYSTEM	1581 16V
Type	I.A.W. M.P.I WEBER - MARELLI
Firing order	1-3-4-2

INJECTION/IGNITION CONTROL UNIT

Make and type	versions with manual gearbox	I.A.W. - 1AF.15	I.A.W. - 1AF - 1G (●)
	versions with automatic transmission	I.A.W. - 1AF.25 (●)	I.A.W. - 1AF - 2G (●)

(■) From chassis n° 19295 (■) From chassis n° 34376

IGNITION COIL WITH 4 HIGH TENSION SOCKETS

Make		M. Marelli
Type		BAE 920 A
Ohmic resistance of primary winding at 20°C	Ω	0,580
Ohmic resistance of secondary winding at 20°C	Ω	9100

SPARK PLUGS

Make and type		NGK BKR6EKC GOLDEN LODGE 2HLDR CHAMPION RC8BYC (▲)
Thread		M 14 x 1,25
Electrode gap	mm	0,8

(▲) Excluding cold countries

TDC AND RPM SENSOR

Make		JAEGER
Type		CVM 01
Sensor winding resistance	Ω	575 ÷ 750
Distance (gap) between sensor and crankshaft pulley teeth	mm	0,5÷1,5

ADVANCE ON ENGINE

With engine idling 850 ± 50 rpm	8°

INTEGRATED ELECTRONIC INJECTION/IGNITION SYSTEM

1747 16V

Make	HITACHI MFI-009
Firing order	1 – 3 – 4 – 2

IGNITION COIL (1 PER SPARK PLUG)

Make		HITACHI
Type		CM14-301
Ohmic resistance of primary winding at 20°C	Ω	0,495 ÷ 0,605
Ohmic resistance of secondary winding at 20°C	Ω	-

RPM AND TDC SENSOR

Make and type		HITACHI GE 108835
Sensor winding resistance	Ω	513 ÷ 627
Distance (gap) between sensor and crankshaft pulley tooth	mm	0,4 ÷ 1,2

DETONATION SENSOR

Make and type	NGK KNE-03

CYLINDER RECOGNITION AND TIMING SENSOR

Make and type	Bosch B 232.070.023

ADVANCE ON ENGINE

With engine idling (850±50 rpm)	9° ± 1°

SPARK PLUGS

Make and type		NGK BKR6EKC Golden Lodge 2HLDR Champion RC8BYC (●)
Thread		M 14×1,25
Electrode gap	mm	0,8

(●) Excluding cold countries

INTEGRATED ELECTRONIC INJECTION/IGNITINO SYSTEM	1998 20V
Make	Bosch 0.261.204.381
Firing order	1 – 2 – 4 – 5 - 3

IGNITION COIL (1 PER SPARK PLUG)

Make		Bosch
Type		0.221.504.006
Ohmic resistance of primary winding at 20°C	Ω	0,4
Ohmic resistance of secondary winding at 20°C	Ω	8500

TDC AND RPM SENSOR

Make and type		Bosch 0.281.002.102
Sensor winding resistance at 20 °C	Ω	774 ÷ 946
Distance (gap) between sensor and crankshaft pulley tooth	mm	0,8 ÷ 1,5

DETONATION SENSOR

Make	Bosch
Type	0.261.231.095

SPARK PLUGS

Make and type		FIAT 7GBMSR CHAMPION RC7BMC
Thread		M 14×1,25
Electrode gap	mm	0,8

Copyright by Fiat Auto

Tool number	DESCRIPTION OF TOOL	ENGINE TYPE					
		1370 12V	1581 16V	1747 16V	1998 20V	1910 TD	2387 TD
1840206000	Tool for removing counter-balance shaft front bearing (to be used with 1840207814)						●
1850132000	Spanner (13 mm), with 1/2" socket for removing inlet manifold fixings				●		
1842128000	Tool for removing injection pump pulley						●
1850184000	Spanner for removing and refitting spark plugs	●	●	●	●		
1852128000	Tool for removing and refitting injectors					●	●
1852138000	Spanner for adjusting injector pipe pressure connectors					●	●
1852154000	Spanner, 1/2" socket, for cylinder head fixing bolts	●		●	●	●	●
1852157000	Spanner, 1/2" socket, for cylinder head fixing bolts		●				
1852159000	Spanner for removing-refitting belt tensioner				●		●
1852160000	Tool for removing-refitting ante-chamber fixing bush						●
1852161000	Spanner for phase transformer				●		
1852162000	Spanner for alternator pulley				●		
1860054000	Drift (⌀ 22 mm) for removing and refitting gudgeon pin bush		●				
1860183000	Pliers (⌀ 75-110 mm) for removing and refitting piston circlips	●	●	●	●	●	●
1860224000	Tool for fitting oil seal on camshaft						●
1860251000	Drift for removing gudgeon pin from piston		●				
1860303000	Tool for fitting gudgeon pin circlips on piston		●				

Tool number	DESCRIPTION OF TOOL	ENGINE TYPE					
		1370 12V	1581 16V	1747 16V	1998 20V	1910 TD	2387 TD
1860313000	Drift for fitting oil seal on valve guide	●	●	●	●	●	●
1860395000	Drift for removing valve guide	●	●	●	●	●	●
1860443000	Lever to insert tappet retainer during valve clearance adjustment					●	●
1860443000	Tool for tensioning timing belt	●					
1860454000	Drift for fitting oil seal on valve guide		●	●			
1860460000	Drift for fitting valve guides		●				
1860470000	Support for cylinder head whilst overhauling	●	●	●	●	●	●
1860490000	Valve leakage test equipment 1895868000 retaining device (to be used with 1860470000)					●	
1860644000	Tool for removing and refitting valves (to be used with 1860877000 and 1860804000)	●					●
1860644000	Tool for removing and refitting valves					●	●
1860700000	Band (⌀ 60-125 mm) for fitting normal and oversize pistons in cylinders	●	●	●	●		
1860724000	Tool for retaining tappets whilst replacing shims					●	●
1860749000	Support for cylinder head whilst removing and refitting valves					●	
1860757000	Tool for removing cartridge oil filter					●	
1860758000	Tool for removing cartridge oil filter	●	●	●			●
1860765000	Tool for retaining toothed pullies and injection pump drive pulley		●				●
1860771000	Flywheel lock		●				

Copyright by Fiat Auto

Tool number	DESCRIPTION OF TOOL	ENGINE TYPE					
		1370 12V	1581 16V	1747 16V	1998 20V	1910 TD	2387 TD
1860790000	Lever for removing and refitting valves (to be used with 1860786000-1860787000-1860788000-1860789000)		●	●			
1860804000	Support for cylinder head whilst removing and refitting valves	●					
1860810000	Dummy heater plug for ante-chamber (to be used when fitting ante-chamber fixing bush)					●	●
1860812000	Tool for refitting valve guides			●	●	●	●
1860813000	Guide for fitting oil seal on valve guides	●	●	●	●		
1860814000	Guide for fitting oil seal on valve guide					●	●
1860815000	Adaptor for rotating crankshaft	●	●	●	●	●	●
1860816000	Drift for fitting oil pump gasket			●	●	●	●
1860817000	Tool for centering gasket on crankshaft	●		●	●	●	●
1860818000	Tools for camshaft timing				●		
1860821000	Tool for removing small end bush			●	●	●	●
1860822000	Tool for timing oil pump				●		●
1860824000	Tool for fitting camshaft gasket			●	●	●	●
1860831000	Spanner for rotating camshaft pullies	●				●	●
1860833000	Spanner for removing-refitting oil sump	●		●	●	●	●
1860834000	Spanner for removing-refitting oil sump	●		●	●	●	●
1860835000	Tool for extracting oil seal on valve guide	●	●	●	●	●	●

Tool number	DESCRIPTION OF TOOL	ENGINE TYPE					
		1370 12V	1581 16V	1747 16V	1998 20V	1910 TD	2387 TD
1860836000	Tool for locking rotation of crankshaft			●	●		
1860844000	Tool for fitting camshaft gasket, inlet side			●			
1860845000	Spanner for tensioning timing belt			●			
1860846000	Flywheel lock (operations at the bench)	●	●	●	●	●	●
1860848000	Spanner for camshaft pulley, exhaust side			●			
1860856000	Spanner for timing pulley, inlet side			●			
1860859000	Supports for removing-refitting power unit (to be used with 1860860000)	●	●	●	●	●	●
1860859001	Bracket for removing-refitting power unit (to be used with 1860859000 and 1860860000)	●					
1860859002	Adaptor for removing-refitting power unit (to be used with 1860859000 and 1860860000)				●	●	●
1860860000	Support for removing-refitting power unit	●	●	●	●	●	●
1860874000	Tools for camshaft timing		●				
1860875000	Tools for camshaft timing			●			
1860876000	Tool for tensioning timing belt		●				
1860877000	Tool for dismantling valves	●					
1860878000	Tool for fitting gasket for crankshaft front cover		●				
1860879000	Grip for tool for fitting crankshaft rear cover gasket		●				
1860880000	Tool for fitting gasket for crankshaft rear cover (to be used with 1860879000)		●				

Copyright by Fiat Auto

Tool number	DESCRIPTION OF TOOL	ENGINE TYPE					
		1370 12V	1581 16V	1747 16V	1998 20V	1910 TD	2387 TD
1860882000	Tool for fitting gasket for camshaft cover and auxiliary shaft cover		●				
1860883000	Pin for centering ante-chamber					●	●
1860884000	Spanner for removing-refitting combustion ante-chamber					●	●
1860885000	Spanner for rotating camshaft pullies		●				
1860886000	Tool for extracting injection pump pulley					●	
1860887000	Tool for positioning rpm sensor		●				
1860888000	Tool for extracting power steering pump support bearing				●		
1860892000	Tool for timing camshafts				●		
1860893000	Spanner for fuel pump cover	●	●	●	●		
1860895000	Vertical support for dial gauge for measuring T.D.C.		●				
1860896000	Graduated disc for engine timing		●				
1860898000	Flywheel lock (on vehicle)			●	●	●	●
1860899000	Tool for timing camshaft	●					
1860901000	Tool for positioning T.D.C.	●					
1860905000	Tool for determining T.D.C.					●	●
1860942000	Graduated disc for angular tightening of cylinder head fixing bolts	●	●	●	●	●	●
1860964000	Fork for rotating injection pump pulley					●	

Tool number	DESCRIPTION OF TOOL	ENGINE TYPE					
		1370 12V	1581 16V	1747 16V	1998 20V	1910 TD	2387 TD
1860965000	Pin for belt tensioner stop					●	
1860966000	Spanner for tensioning auxiliary shaft drive belt						●
1860967000	Spanner for removing-refitting lubrication connector					●	
1860968000	Lever for tensioning auxiliary shaft drive belt						●
1860969000	Connector for checking oil pressure					●	
1861001039	Pair of brackets for fixing engine to rotating stand				●	●	●
1861001041	Pair of brackets for fixing engine to rotating stand			●			
1861001042	Pair of brackets for fixing engine to rotating stand		●				
1865090000	Complete support for dial gauge for checking injection pump advance						●
1867019000	Drift for removing and refitting oil pump drive gear bush		●				
1867029000	Flywheel lock (at the bench)				●		●
1867030000	Flywheel lock (on vehicle)	●					
1870404000	Support for dial gauge for measuring cylinder liner/bore recesses and projections				●	●	
1890385000	Reamer for valve guide openings	●	●	●	●		
1895762000	Torque wrench for checking auxiliary shaft drive belt tension	●	●	●	●		
1895868000	Valve leakage test equipment	●	●	●	●	●	●
1895882000	Dial gauge for measurements (use a magnetic base 1870404000)						●

Copyright by Fiat Auto

Tool number	DESCRIPTION OF TOOL	ENGINE TYPE					
		1370 12V	1581 16V	1747 16V	1998 20V	1910 TD	2387 TD
1895890000	Fuel pump delivery pressure gauge with unions	●	●	●	●		

CLUTCH

1870081000	Guide pin for centering clutch disc					●	●
1870447000	Guide pin for centering clutch disc		●				
1875084000	Tool for removing clutch disc thrust bearing						●
1875086000	Guide pin for centering clutch disc	●		●	●		

GEARBOX - DIFFERENTIAL

1842133000	Tool for removing differential bearing and gearbox gears	●					
1842134000	Tool for removing gearbox gears and hubs	●					
1845028000	Tool for removing differential bearings	●					
1845057000	Tool for removing lay shaft 5th speed gear bush	●					
1845062000	Tool to remove front axle shaft constant velocity joint (to be used with 1**847**017001)		●	●	●	●	
1847017001	Earth (to be used with 1860**889**000)	●	●	●	●	●	●
1847017004	Plate for removing flanged shaft from planet gear (to be used with 1**847**017001)		●	●	●	●	
1847056000	Tool for removing differential output shafts	●					
1850132000	Spanner for bolts fixing differential casing cover				●		
1850113000	Spanner (12 mm) for gearbox oil drain plug	●	●	●	●	●	

Tool number	DESCRIPTION OF TOOL	ENGINE TYPE					
		1370 12V	1581 16V	1747 16V	1998 20V	1910 TD	2387 TD
1855035000	Spanner (19 mm) for removing and refitting gearbox	●	●	●	●	●	
1860691000	Drift for removing and refitting gear hardening ball plug	●					
1860851000	Cross member for removing-refitting gearbox	●	● (*)	●	●	●	●
1860851001	Transverse adaptor for removing-refitting gearbox (to be used with 1860851000)	●	● (*)	●	●	●	●
1860870000	Connector for checking line pressure		● (*)				
1860873000	Bracket for removing-refitting gearbox	●	● ● (*)	●	●		
1860889000	Two-way connector for earth	●	●	●	●	●	●
1870007000	Universal handle	●	●	●	●	●	
1870152000	Drift for fitting hubs and gears on main and lay shafts	●	●				
1870419000	Tool for fitting gasket for main shaft on bell housing (to be used with 1870007000)	●	●	●	●	●	
1870448000	Tool for fitting front bearing inner race		●	●	●	●	
1870469000	Tool for fitting differential bearing (to be used with 1870007000)	●					
1870478000	Tool for fitting 4th speed gear bush and rear bearing		●	●	●	●	
1870629000	Drift for fitting differential casing cover seal (to be used with 1870007000)	●					
1870630000	Drift for fitting differential casing seal (to be used with 1870007000)	●					
1870631000	Drift for fitting main and lay shaft bearings and gears	●					
1870632000	Drift for fitting bearings	●					

(*) Tools for Aisin automatic transmission

Copyright by Fiat Auto

Tool number	DESCRIPTION OF TOOL	ENGINE TYPE					
		1370 12V	1581 16V	1747 16V	1998 20V	1910 TD	2387 TD
1870633000	Drift for fitting clutch release shaft bush	●					
1871001014	Support for gearbox-differential unit whilst overhauling (to be fitted to 1861000000 or 1871000000)	●					
1874140005	Pair of tools for staking gearbox shaft nuts (to be used with 1874140001)	●					
1874541000	Tool for fitting differential bearing outer race				●		
1875016000	Drift for fitting seal on drive shaft flange		●	●	●	●	
1875017000	Tool for removing and refitting differential bearing races (to be used with 1840005003)		●	●	●	●	
1875088000	Drift for fitting main and lay shaft bearings	●					
1881124000	Pliers for adjusting main and lay shaft rear bearing circlips	●					
1895411000	Pipes and connectors (1/4") for checking automatic gearbox oil pressure		● (*)				
1895424000	Pressure gauge (0÷25 bar) for checking automatic gearbox oil pressure		● (*)				
1895655000	Tool for determining thickness of differential bearing adjustment shim (to be used with 1895884000)	●					

BRAKING SYSTEM

1856132000	Spanner (10-11 mm) for adjusting brake fluid pipe unions	●	●	●	●	●	●
1856133000	Spanner for adjusting rear brake caliper self-adjusting device				●		●
1872273000	Set of tools for retaining brake cylinder pistons whilst fitting shoes	●	●	●		●	
1895899000	Vacuum gauge with connectors for checking operation on vehicle of vacuum pump					●	●
1895873000	Tool for adjusting position of load proportioning valve	● (**)	●	●	●	●	

(*) Tools for Aisin automatic transmission
(**) Versions with ABS only

Tool number	DESCRIPTION OF TOOL	ENGINE TYPE					
		1370 12V	1581 16V	1747 16V	1998 20V	1910 TD	2387 TD
1881136000	Pliers to remove and refit rear brake shoes return springs	●	●	●		●	

STEERING

1847038000	Tool for removing steering track rod ends	●	●	●	●	●	●
1860888000	Tool for removing-refitting power steering pump support bearing				●		

SUSPENSION

1845028000	Tool for removing front hub bearing inner race from flange(to be used with 1840005003 and 1840005302)	●	●	●	●	●	●
1847014000	Percussion extractor for wheel hub caps	●	●	●	●	●	●
1874555000	Pneumatic tool for compressing suspension springs when removing shock absorber	●	●	●	●	●	●
1875055000	Drift for fitting front wheel hub bearings (to be used with 1870007000)	●	●	●	●	●	●
1875059000	Drift for fitting rear wheel hub caps	●	●	●	●	●	●

AUXILIARY UNITS

1860494000	Tool for removing air conditioning compressor electro-magnet coupling and pulley	●	●	●	●	●	●
1895655000	Plate for measuring air conditioning compressor electro--magnet coupling clearance	●	●	●	●	●	●

ELECTRICAL EQUIPMENT

1850167000	Spanner (13 mm) for adjusting starter motor fixing bolts			●			
1860893000	Tool for removing fuel level gauge ring nut	●	●	●	●		
1860897000	Tool for extracting radio	●	●	●	●	●	●

Copyright by Fiat Auto

00.A

Tool number	DESCRIPTION OF TOOL	ENGINE TYPE					
		12V	16V	16V	20V	TD	TD
1876044000	Tool for extracting cigar lighter base	●	●	●	●	●	●

BODYWORK

1860890000	Spanner for removing-refitting door hinges	●	●	●	●	●	●
1878034000	Tool for removing window opening handles	●	●	●	●	●	●
1878077000	Tool for removing door panel or fixing buttons	●	●	●	●	●	●
1878080000	Tool for positioning door check strap whilst fitting flexible retaining pin (to be used with 1878081000)	●	●	●	●	●	●
1878081000	Pliers for removing-refitting door check strap flexible pin (to be used with 1878080000 during fitting)	●	●	●	●	●	●

ORDINARY TOOLS

1840005000	Universal extrator	●	●	●	●	●	●
1840005003	Three arm bridge (complete with brackets)	●	●	●	●	●	●
1840005302	Brackets (2) for removal	●	●	●	●	●	●
1840206000	Percussion extractor (to be used with specific tools)	●	●	●	●	●	●
1846017000	Base for puller half-rings	●	●	●	●	●	●
1847017001	Percussion extractor (to be used with specific tools)	●	●	●	●	●	●
1861000000	Rotating stand for overhauling engine (also used for gearboxes and differentials)	●	●	●	●	●	●
1861000001	Pair of sections for brackets supporting the engine on rotating stand 1861000000	●	●	●	●	●	●
1870007000	Universal handle	●	●	●	●	●	●

Tool number	DESCRIPTION OF TOOL	ENGINE TYPE					
		1370 12V	1581 16V	16V	20V	1910 TD	2387 TD
1870404000	Support for measuring recesses and projections (to be used with 1895881000)	●	●	●	●	●	●
1871000000	Rotating column for overhauling gearboxes and differentials	●	●	●	●	●	●
1874140001	Pliers for staking nuts (to be used with specific tools)	●	●	●	●	●	●
1876048000	Tool for extracting MINI HYLOK CONTACT type terminals (MHF) ⌀ 2,15 mm	●	●	●	●	●	●
1881138000	Adjustable pliers for pipe restricting bands and tabs	●	●	●	●	●	●
1882002010	Tool panel to be fixed to wall or stand 1882003000 (with hooks)	●	●	●	●	●	●
1882003000	Stand to hold two tool panels	●	●	●	●	●	●
1882011000	Set of additional hooks (50) for tool panel	●	●	●	●	●	●
1895113000	Gauge (0,05-0,10...0,80 mm) for checking various clearances	●	●	●	●	●	●
1895881000	Dial gauge to be used with specific tools (measuring capacity mm 10; shank length mm 16,7)	●	●	●	●	●	●
1895882000	Dial gauge to be used with specific tools (measuring capacity mm 10; shank length mm 88)	●	●	●	●	●	●
1895884000	Dial gauge to be used with specific tools (measuring capacity mm 5; shank length mm 16,5)	●	●	●	●	●	●

Copyright by Fiat Auto

DESCRIPTION	Thread size	Tightening torques daNm	ENGINE TYPE 12V	16V	16V	20V	TD	TD
ENGINE								
Main bearing caps fixing, flanged bolt	M10	8		●				
	M12	2+100°	●		●	●	●	●
(Dust) shield fixing, bolt	M6	0,9	●		●	●	●	●
Sump oil drain plug	M14	2,5	●					
	M18	2			●	●	●	●
	M22	5		●				
Oil sump fixing, bolt	M6	0,9	●	●	●	●	●	●
	M8	2,5	●		●	●	●	●
Flywheel side and timing side cover fixing, bolt	M6	0,7		●				
		0,9	●		●	●	●	●
Timing belt shields fixing, bolt	M6	0,9	●	●	●	●	●	●
	M8	2,5		●				
	M10×1,25	5		●				
Cylinder head to crankcase fixing, bolt	M10×1,25	4+ 90°+90°	●	●				
Cylinder head to crankcase fixing, bolt	M10	4+ 90°+90°+90°			●	●		
Cylinder head to crankcase fixing, bolt	M12	6,5+ 90°+90°+90°						●
Cylinder head to crankcase fixing, bolt	M10	6,5+ 90°+90°+90°					●	
Engine support to crankcase fixing, bolt	M10	5				●		
	M10×1,25	7	●	●	●			
	M8	2,5		●				
Camshaft cap fixing, bolt and nut	M7	1,5	●		●	●	●	●
Tappet cover to cylinder head fixing, bolt	M6	0,9	●		●	●	●	●
Inlet manifold to cylinder head fixing, nut	M8	2,5	●		●		●	●
		3		●				
Exhaust manifold to cylinder head fixing, nut	M8	2,5	●		●	●	●	●
		3		●				
Flywheel to crankshaft fixing, bolt	M6	0,9	●		●	●		
Crankpin fixing, bolt	M8	2+40°	●					
	M8	2+60°			●	●	●	●

DESCRIPTION	Thread size	Tightening torques daNm	ENGINE TYPE 12V	16V	16V	20V	TD	TD
Engine flywheel fixing, bolt	M10	8,3		●				
	M12×1,25	16	●		●	●	●	●
Crankshaft gear fixing, bolt (*)	M16 left	36			●	●	●	●
Auxiliary pulley to crankshaft gear fixing, bolt	M8	2,5	●				●	●
		3,2			●			
Gear to camshaft fixing, bolt (inlet and/or exhaust)	M12	12	●	●	●	●	●	●
Butterfly casing to inlet manifold fixing, bolt	M6	0,9	●					
Accelerator bracket to inlet manifold fixing, bolt	M6	0,9	●					
Sensors to cylinder block/crankcase and cylinder head fixing, bolt	M6	0,9	↙		●	●	●	●
Detonation sensor to cylinder block/crankcase fixing, bolt	M8	2,5	●		●	●		
Coils support to cylinder head fixing, bolt	M6	0,9	●					
Connector mounting bracket to support for coils and inlet manifold fixing, bolt	M6	,9	●					
Oil pump to crankcase fixing, bolt	M6	0,9	●		●	●	●	●
	M8	2,5		●				
Oil dip stick fixing, nut and bolt	M6	0,9	●			●	●	●
Water pump fixing, bolt	M8	2,5	●	●	●	●	●	●
Water inlet pipe to cylinder head fixing, bolt	M6	0,9	●		●	●		
	M8	2,5	●	●				
	M10	5				●		
Thermostat to cylinder head fixing, bolt	M8	2,5	●	●	●	●		
Air conditioning compressor support to crankcase fixing, bolt	M10×1,25	5	●		●			
Alternator support to crankcase fixing, bolt	M8	2,5	●					
	M10×1,25	7	●					
	M10×1,25	5		●				

(*) The bolt should not be lubricated

Copyright by Fiat Auto

DESCRIPTION	Thread size	Tightening torques daNm	ENGINE TYPE 12V	16V	16V	20V	TD	TD
Lower bracket to alternator mounting and alternator fixing, nut	M10	5		●				
	M12	7	●		●	●	●	
Upper and lower bracket to crankcase fixing, flanged bolt	M10×1,25	5	●					
Upper alternator fixing, nut	M10×1,25	5	●					
Compressor to support fixing, bolt	M8	2,5	●	●		●		
	M8	3,2			●			
	M10	5				●	●	●
Auxiliary shaft automatic belt tensioner and alternator mounting to crankcase fixing, bolt	M8	2,5	●					
Auxiliary shaft fixed belt tensioner fixing, flanged bolt	M8	2,5					●	●
	M10	5	●		●			
Timing belt tensioner fixing, nut for bolt	M8	2,5	●	●	●			
Power steering pump fixing, bolt	M6	2,5	●	●	●		●	●
	M10×1,25	5		●				
Power steering pump pulley shield fixing, bolt	M6	0,9	●					
Pulley to power steering pump fixing, bolt	M6	0,9		●				
	M8	2,5	●		●	●	●	●
Water temperature sender unit fixed to cylinder head	M16×1,5 tapered	2,5	●		●	●	●	●
		3		●				
Oil pressure switched fixed to crankcase	M14×1,5	2,2	●		●	●	●	●
		3,2		●				
Water temperature sender unit	M12×1,5	2	●		●	●	●	●
		2,4		●				
Ignition coil to support fixing, bolt	M5	0,4	●					
	M6	0,9		●				
Spark plug	M14×1,25	2,7	●	●	●	●		
Oil temperature sender unit on sump	M14×1,5	2,2			●	●		
Crankcase timing tensioner support plate fixing, bolt	M8	2,5		●				
	M10×1,25	5						
Rpm sensor support to front cover fixing, bolt	M6	0,9		●				

DESCRIPTION	Thread size	Tightening torques daNm	ENGINE TYPE 12V	1eV	16V	20V	TD	TD
Auxiliary shaft cover to crankcase fixing, bolt	M6	1,1		●				
Engine breather to crankcase fixing, bolt	M8	2,5		●				
Tensioner bracket to engine support fixing, bolt (for versions with air conditioning)	M10×1,25	5		●		●		
Bearing to tensioner bracket fixing, nut (for versions with air conditioning)	M10	5		●				
Camshaft housing (inlet/exhaust) to cylinder head fixing, bolt	M8	1,5		●				
Inlet manifold to exhaust camshaft housing fixing, bolt	M7	1,5		●				
Connecting rod bolt, nut	M9×1	5,1		●				
Engine pulley fixing, nut	M20	19		●				
Coil holder bracket fixing, nut	M7	1,5		●				
Rpm sensor to support fixing, bolt	M6	0,9		●				
Timing tensioner bearing to cylinder head fixing, bolt	M12×1,25	8,7		●				
Oil pump shaft driven gear fixing, bolt	M10×1,25	8		●				
Alternator to mounting and bracket fixing, bolt	M12×1,25	8,5		●				
		9			●			
	M10×1,25	5		●				
		7			●			
Water pump - alternator tensioner bearing fixing, nut	M10	5		●				
Bearing mounting bracket to alternator mounting fixing, bolt	M10×1,25	5		●				
Power steering pump fixing, nut	M10×1,25	5		●				
Exhaust manifold to crankcase fixing, bolt	M8	2,5			●			

Copyright by Fiat Auto

00.

DESCRIPTION	Thread size	Tightening torques daNm	ENGINE TYPE 1370 12V	1581 16V	16V	20V	1910 TD	2387 TD
Bracket to engine support fixing, bolt	M8	2,5				●		
	M10×1,25	5				●		
Threaded, tapered plug	M16×1,5	2,5			●			
	M10×1,25	1			●			
Coils cover fixing, bolt	M5	0,5			●			
	M6	0,9			●	●		
Wiring support bracket fixing, bolt	M8	2,5			●			
Connecting rod support bracket fixing, bolt	M8	2,5			●			
	M10	5			●			
Fuel manifold fixing, bolt	M6	0,9			●			
Coils fixing bolt	M5	0,5			●			
	M6	0,9				●		
Oil pump element fixing, bolt	M7	1,5			●			
Oil dip stick holder extension fixing, bolt	M10×1,25	5			●			
Water-oil heat exchanger fixing connector	M20	3			●			
Rigid pipe to water manifold and water manifold to cylinder head fixing, bolt	M6	0,9			●			
Water manifold to cylinder head fixing, nut	M8	2,5			●			
Starter motor rear bracket fixing, bolt	M8	2,5			●			
Starter motor to bracket fixing, nut	M6	0,9			●			
Alternator/power steering mounting fixing, bolt	M8	3,2			●			
	M8 (*)	2,5 (*)			●			
	M10	7			●			
Alternator strut fixing, bolt	M8	2,5			●			
Drive shaft support fixing, bolt	M8	2,5			●			
	M10	7			●			
	M10	5				●		●

(*) Length 22 mm.

DESCRIPTION	Thread size	Tightening torques daNm	ENGINE TYPE 1370 12V	1581 16V	1747 16V	1998 20V	1910 TD	2387 TD
Oil level sender unit	M12×1,25	2			●	●	●	●
Automatic belt tensioner to alternator mounting fixing, bolt	M8	2,5				●	●	●
	M10	7				●	●	
Fixed belt tensioner to alternator mounting fixing, bolt	M8	2,5				●	●	
Fixed belt tensioner to air conditioning compressor support fixing, bolt	M10×1,25	5				●	↙	●
Belt tensioner to engine mounting fixing, bolt	M8	2,5				●		
	M10	5				●		
Connector under tappet cover fixing, bolt	M6	0,9				●		
Reaction bracket to duct and drive shaft support fixing, bolt	M8	2,5				●		
Inlet manifold bracket and wiring conduit fixing, nut	M8	2,5				●		
Flywheel damper to gear fixing, bolt	M8	2,5				●		
Timing belt tensioner fixing, bolt	M10	5				●	●	●
Inlet gear to phase transformer fixing, bolt	M6	0,9				●		
Pick up to cap fixing, bolt	M6	0,9				●	●	●
Heat exchanger connector, bolt	M20	3				●		
Water return pipe from heater to cylinder head fixing, bolt	M10×1,25	5				●		
Water supply pipe to crankcase fixing, bolt	M8×1,25	2,5				●		
Air conditioner shield fixing, bolt	M6	0,9				●		
Adjustment screw tightening, nut	M10	5				●		

Copyright by Fiat Auto

DESCRIPTION	Thread size	Tightening torques daNm	ENGINE TYPE 12V	16V	16V	20V	TD	TD
Reaction bracket to drive shaft fixing, bolt	M10×1,25	5				●	●	
Nut for bolt btwn sump and drive shaft support	M8	2,5				●	●	●
Power steering pump to connecting rod support fixing, bolt	M8	2,5				●		●
Power steering pulley to shaft fixing, bolt	M16	10				●		
Oil vapour separator to inlet manifold fixing, nut	M6	0,9					●	●
Auxiliary support to crankcase fixing, flanged bolt	M8	2,5					●	●
	M10	5					●	●
Injector fixing, ring nut	M35	12					●	●
Exhaust manifold reaction bracket to crankcase, fixing	M8	2,5					●	●
Injection pump to mounting, crankcase and inlet manifold fixing, bolt	M8	2,5					●	●
Reaction bracket to injection pump fixing, nut	M8	2,5					●	●
Injection pump gear fixing, nut	M14	5					●	●
Complete injector	M24	5,5					●	●
Fuel filter to inlet manifold fixing, nut	M8	2,5					●	●
Turbo-charger to exhaust manifold fixing, nut	M8	2,5					●	●
Exhaust manifold connector to turbo-charger fixing, nut	M8	2,5					●	●
Filler for fixing oil supply pipe to turbo-charger	M10	1,5					●	●
	M12							
Thermostatic valve fixing, connector	M20	3					●	●

DESCRIPTION	Thread size	Tightening torques daNm	ENGINE TYPE 1370 12V	1581 16V	1747 16V	1998 20V	TD	2387 TD
Complete jet to crankcase fixing, bolt	M6	0,9					●	●
Water outlet front filler to cylinder head fixing, bolt	M6	0,9					●	●
Thermostat to water outlet filler from cylinder head fixing, bolt	M7	1,5					●	●
Upper and lower alternator reaaction brackets fixing, bolt	M10×1,25	5					●	●
Air vacuum pump to cylinder head fixing, bolt	M8	2,5					●	●
EGR valve to exhaust manifold fixing, nut	M8	2,5					●	●
Pipe to EGR valve fixing, bolt	M8	2,5					●	●
Pipe to exhaust or inlet manifold fixing, nut	M6	0,9					●	●
Air pressure switch	M12	2					●	●
Heater plug	M12	1,5					●	●
Reaction bracket to exhaust manifold fixing, nut	M8	2,5						●

Copyright by Fiat Auto

DESCRIPTION	Thread size	Tightening torques daNm

ENGINE EXHAUST

Bracket connecting half brackets support front pipe to bracket anchored to differential support fixing, bolt	M8	2,5
Front section to catalytic converter fixing, bolt with unlosable flexible washer	M8	2,5
Bracket with mounting to differential side support fixing, bolt	M8	2,5
Front section of exhaust pipe to manifold fixing, nut for flange	M8	3,2
Front pipe supporting half bracket fixing, nut with metal insert	M8	2,5
Bracket to cylinder block/crankcase fixing, nut with unlosable tapered washer	M8	2,5
Rear pipe to catalytic converter fixing, nut	M10×1,25	4,2
Bracket to floor for supporting first rear silencer fixing, bolt	M8	2,8
Rear exhaust pipe final mounting bracket to floor fixing, bolt	M8	2,8
Bracket to silentbloc fixing, bolt	M10	3

POWER UNIT MOUNTING

Support to gearbox-differential fixing, bolt	M12×1,25	8,5
Engine to bodyshell, engine and gearbox side fixing, bolt	M8	3,5
Bracket to gearbox-differential side fixing, bolt (1370 engine)	M10×1,25	4,5
Bracket to gearbox-differential side fixing, bolt (1370 engine)	M12×1,25	9
Connecting rod support to bodyshell fixing, bolt (1747 - 1998 engines)	M8	3,8

DESCRIPTION	Thread size	Tightening torques daNm
Connecting rod support to bodyshell fixing, tapered bolt (1747 - 1998 engines)	M8	2,8
Mounting to support - engine side fixing, nut (1370 engine)	M10×1,25	4,5
Mounting to engine side support fixing, nut (1998 engine)	M12×1,25	8
Support to gearbox fixing, bolt with flange (1370 engine)	M10×1,25	5
Differential support to gearbox fixing, nut (all versions with C510 gearbox)	M12×1,25	8
Reaction rod to bracket and engine support fixing, bolt (1747 - 1998 engines)	M10×1,25	5
Mounting to engine side support fixing, bolt (1581 engine)	M12×1,25	8
Support to engine sump, differential side, fixing, bolt (1747 - 1998 engines)	M12×1,25	8
Brace to differential side support fixing, bolt (1747 - 1998 engines)	M12×1,25	8
Differential side flexible mounting to cross member fixing, bolt	M8	4
Bracket to gearbox (gearbox side) fixing, bolt (1998 engine)	M10×1,25	5
Bracket to gearbox (gearbox side) fixing, bolt (1581 -1747 engines)	M10×1,25	5
Anti-bending strut to crankcase fixing, bolt (1581 engine)	M10×1,25	5
Anti-bending strut bracket to differential side support and strut joined to bracket fixing, bolt (1581 engine)	M8	2,8

PEDALS ASSEMBLY

Accelerator pedal to pedals assembly fixing, nut	M6	0,44
Brake and clutch pedals complete support to bodyshell fixing, nut	M8	1,5
Pedals assembly to dashboard fixing, bolt with wide flange	M8	2,6

Copyright by Fiat Auto

DESCRIPTION	Thread size	Tightening torque daNm
Clutch cable to gearbox fixing and adjusting, nut	M6	0,44
Brake and clutch pedals hinged pin to pedals assembly fixing, nut	M8	3,2

EXTERNAL GEARBOX CONTROLS

Gear lever support to floor panel fixing, bolt	M6	0,74
Lower selector and engagement rod to gear lever fixing, bolt	M8	2,8
Intermediate idler pin fixing, nut	M8	1,7
Spherical heads to levers fixing, nut	M8	1,7
Selector idler to gearbox fixing, nut for bolt	M8	1,7
Reverse gear inhibitor to gearbox fixing, bolt	M8	1,7
Spherical heads to selector lever fixing, nut	M8	1,7
Reaction bracket to gearbox fixing, bolt	M8	2,7
Gearbox control to support fixing, nut	M6	0,74
Handbrake mounting and gear lever to bodyshell fixing, bolt	M8	3,5

GEARBOX AND DIFFERENTIAL

Speed control rod position spring fixing, nut	M14×1,5	3
Plate to gearbox casing fixing, bolt	M8	2,5
Gearbox casing cover and plate fixing, bolt	M8	2,5

DESCRIPTION	Thread size	Tightening torques daNm
Cover to gearbox casing support fixing, bolt	M6	1
Gearbox casing to bell housing fixing, bolt	M8	2,5
Reverse gear shaft fixing, bolt	M8	3,4
5th speed gear main and lay shaft fixing, ring nut	M20×1,5	11,8
Gear selector forks fixing, bolt	M6	1,8
Lever to gear selector and engagement shaft fixing, bolt	M8	2,5
Support for reverse gear control lever fixing, bolt	M6	1
Bush for gear control shaft fixing, bolt	M6	1
Front drive shaft reduction ring gear fixing, bolt	M10×1,25	8,8
Differential casing to gearbox casing retaining flange fixing, bolt	M10×1,25	4,9
	M8	2,5
Speedometer mounting fixing, bolt	M6	1,2
Tapered, threaded gearbox oil drain plug	M22×1,5	4,6
Tapered, threaded gearbox oil filler plug	M22×1,5	4,6
Right differential shaft support fixing, bolt	M6	1
Threaded, tapered plug for 1st - 2nd speed rod on gearbox casing	M18×1,5	2
Support for gear selector lever fixing, bolt	M8	1,5
Switch for reversing light	M14×1,25	3

Copyright by Fiat Auto

DESCRIPTION	Thread size	Tightening torques daNm
BRAKING SYSTEM		
Brake back plate to suspension arm fixing, bolt with unlosable flexible washer	M8	2,4
Front brake caliper fixing, bolt	M10x1,25	5,7
Front brake caliper to steering knuckle fixing, bolt with unlosable tapered wahser (1998 20V only)	M12×1,25	10,5
Front brake disc, rear brake disc, rear brake drum fixing, bolt (with wheel centering function)	M8	1,2
Complete bracket for braking system fixing, bolt with unlosable tapered washer	M8	2,5
Flexible pipe to front brake caliper, connector	M10	1,4
Bleed screw on front brake caliper	M8	0,6
Bleed screw on rear brake caliper	M7	0,6
Flexible pipe to rear brake calilper, connector (versions with rear disc brakes only)	M10	1,4
Cylinder to rear brake back plate fixing, bolt (all versions with rear drum brakes)	M6	0,8
Bleed screw on rear drum brake cylinder	M8	0,65
Connector for brake pump (version with ABS)	M10	1,4
Male connector for pipes with inflated ends for fixing rigid pipe	M10	1,4
Load proportioning valve to bracket fixing, bolt with flange	M6	1
Load proportioning valve spring retaining bracket to rear stabilizer bar fixing, nut with polyammide ring for bolt	M6	0,6
Load proportioning valve adjustment lever, bolt	M8	2
Rear brake caliper to plate fixing, bolt (versions with rear disc brakes only)	M10×1,25	5,7

DESCRIPTION	Thread size	Tightening torques daNm

HANDBRAKE

Bolt fo supporting handbrake and gear lever to bodyshell	M8	2,8
Bolt for supporting handbrake and gear lever to bodyshell	M8	1,5
Handbrake lever mounting bracket to plate fixing, bolt	M8	2,8
Handbrake cable sliding plate to floor panel fixing, bolt	M6	0,85
Handbrake cable reaction bracket to floor panel fixing, bolt	M8	4
Handbrake support to front cross member fixing, nut for b olt (1998 20v version only)	M8	2,5
Handbrake lever complete support fixing, nut	M8	1,8

POWER ASSISTED STEERING AND STEERING

Power assisted steering bracket fixing, nuts and bolts	M6	0,5
	M8	15
Filler for return connector from power steering to reservoir	M12x1.25	2
Casing to cross member fixing, bolt with flange	M10×1,25	7
Filler for pump/power steering supply connector on power assisted steering	M14x1,5	3
Casing rod to steering knuckles fixing, nut	M10x1,25	4
Filler for pump/power steering supply connector on pump	M12	3,6
Universal joint fork fixing, bolt with unlosable tapered washer	M8	2
Steering wheel to steering column fixing, nut	M16x1,5	5
Steering column support fixing, bolts with tapered edges and unlosable washers	M8	2,2
AIR BAG module to steering wheel fixing, bolt with unlosable washer	M6	0,74

Copyright by Fiat Auto

DESCRIPTION	Thread size	Tightening torques daNm
Reinforcement strut to steering colum support fixing, bolt with tapered edges and unlosable washers	M8	2,2
Reinforcement strut to pedals assembly fixing, nut	M8	2,2

FRONT SUSPENSION

Front cross member to bodyshell rear fixing, bolt for nut	M10×1,25	8
	M12×1,25	12
Front cross member to bodyshell front fixing, bolt with wide flange	M12×1,25	12
Track control arm to cross member front and rear U bolts outer fixing, bolt with flat tapered washer	M10×1,25	7,5
Track control arm to cross member front and rear U bolts inner fixing, bolt with flat tapered washer	M10×1,25	7,5
Upper shock absorber to mounting fixing, flanged nut	M12×1,25	10
Upper shock absorber mounting to bodyshell fixing, bolt with wide flange	M8	3,2
Shock absorber to steering knuckle fixing, nut	M10×1,25	7
	M12×1,25	10
Track control arm joint to steering knuckle fixing, nut for bolt	M10×1,25	7
Stabilizer bar supporting U bolt to cross member fixing, bolt with tapered, flat, unlosable washer	M8	4
Connecting rod to shock absorber and to stabilizer bar fixing, nut	M10×1,25	7
Front wheel hubs to joint fixing, nut	M22×1,5	7+55°
	M24×1,5	7+62°
Wheel bolts/nuts	M12×1,25	8,6

REAR SUSPENSION

Front flexible mounting to rear frame and bodyshell fixing, bolt with wide flange	M12×1,25	12
Rear flexible mounting to bodyshell fixing, bolt with wide flange	M12×1,25	12

DESCRIPTION	Thread size	Tightening torques daNm
Rear suspension track control arm to frame fixing, nut for bolt	M16×1,5	15
Lower shock absorber to suspension fixing, nut for bolt	M12×1,25	8,8
Upper shock absorber to support fixing, bolt	M10×1,25	6
Rear hub fixing stub axle, nut	M22×1,5	28
Stabilizer bar to rear suspension arm fixing, bolt	M10×1,25	5,6
Stabilizer bar supporting U bolts to rear suspension arm fixing, bolt	M8	3
Wheel bolts/nuts	M12×1,25	8,6

AIR CONDITIONING

Inlet and outlet ducts for drier filter, evaporator, compressor and condenser fixing, bolts	M6	0,55
Air conditioning pipe brackets fixing, bolts	M6	0,55
3 stage pressure switch fixing	M10	0,8

ELECTRICAL EQUIPMENT

Earth to bodyshell fixing, bolt	M8	2,4

BODYWORK

Door side fixed hinges fixing, bolt	M10×1,25	4,5
Belt adjuster to upper section of centre pillar fixing, bolt	7/16	2
Lock striker fixing, bolt	M8	2
Moving hinges to fixed hinges fixing, bolt	M6	1,5

Copyright by Fiat Auto

DESCRIPTION	Thread size	Tightening torques daNm
Seat belt reels fixing, bolt	7/16"	4

AIR BAG SYSTEM

Air bag control unit fixing, bolt	M6	0,8
Driver's module to steering wheel fixing, bolt	M6	0,74
Passenger module to dashboard cross member fixing, bolt	M6	0,7

ABS

Control unit mounting bracket to bodyshell fixing, bolt with tapered edges	M8	2,4
Sensors to front and rear wheels fixing, bolts	M6	0,65
Rear ABS sensor cables mounting bracket fixing, nut	M8	2

page

Planned Maintenance Programme 1

The Planned Maintenance Programme whose operations are described later on is the one in force at the time of printing and replaces and cancels the one in volume 1 of the Manual.

Copyright by Fiat Auto

PLANNED MAINTENANCE PROGRAMME

N°	OPERATION	THOUSANDS OF KM									PAGE
		20	40	60	80	100	120	140	160	180	
1	Check tyre condition and wear	●	●	●	●	●	●	●	●	●	1
3	Check operation of front disc brake pad wear sensor	●	●	●	●	●	●	●	●	●	2
3	Check condition of rear disc brake pads		●		●		●		●		2
3	Check condition and wear of rear drum brakes			●			●			●	2
25	Visually inspect condition of: exterior and protection, underbody, pipes (exhaust, fuel supply, braking system), rubber elements (boots, hoses, bushes, etc.)	●	●	●	●	●	●	●	●	●	3
3	Check tension and, if necessary, adjust various drive belts (excluding engines fitted with automatic tensioners)	●									3
7	Visually inspect condition of trapezoid and/or various Poly-V drive belts		●		●		●		●		6
3	Check/adjust clutch pedal travel or height (excluding hydraulically operated versions)		●		●		●		●		7
3	Check/adjust handbrake lever travel		●		●		●		●		8
10	Check/adjust tappet clearance (1910 TD and 2387 TD diesel versions)	●	●		●		●		●		8
11	Checking exhaust gas emissions/diesel fumes		●		●		●		●		10
13	Check operation of anti-evaporation system				●				●		13
13	Replace fuel filter (petrol engines)		●		●		●		●		13
14	Replace fuel filter (diesel engines)	●	●	●	●	●	●	●	●	●	14
13	Replace air filter cartridge (petrol engines)		●		●		●		●		15
13	Replace air filter cartridge (diesel engines)	●	●	●	●	●	●	●	●	●	15
13	Check/top up fluid levels (engine cooling, braking system, power steering, windscreen washer, battery, etc.)	●	●	●	●	●	●	●	●	●	17
13	Replace timing belt						●				21
13	Replace spark plugs, check leads		●		●		●		●		44
25	Check operation of engine control systems (using diagnostic socket)		●		●		●		●		46
25	Check gearbox and differential oil level (only for version with manual gearbox)				●				●		47
22	Checking automatic gearbox oil level	●	●	●	●	●	●	●	●	●	47
23	Change engine oil (or every 18 months) (every 10,000 Km for diesel engines)	●	●	●	●	●	●	●	●	●	48
24	Replace engine oil filter (or every 10,000 km for diesel engines)	●	●	●	●	●	●	●	●	●	48
25	Change brake fluid (every 24 months)			●			●			●	50
26	Replace pollen filter (or every 12 months)	●	●	●	●	●	●	●	●	●	51

Copyright by Fiat Auto

Foreword

The maintenance operations consist of checking and restoring the efficiency of certain vehicle components subject to wear which may deteriorate during normal usage conditions.
This section describes the operations which should be carried out on the vehicle at the intervals set out in the Planned Maintenance Programme (on the previous page). Each operation is described indpendently, on account of which there is no pre-defined ideal operating cycle to be repeated at each interval.
It is therefore necessary to ensure that those operations which require the same components to be dismantled are carried out at the same intervals in order to maximum the efficiency of the repair times.
If, when carrying out each operation, the need arises to carry out additional replacements or further repairs not envisaged in the Planned Maintenance Programme, prior approval must be obtained first from the Customer.

PLANNED MAINTENANCE OPERATIONS

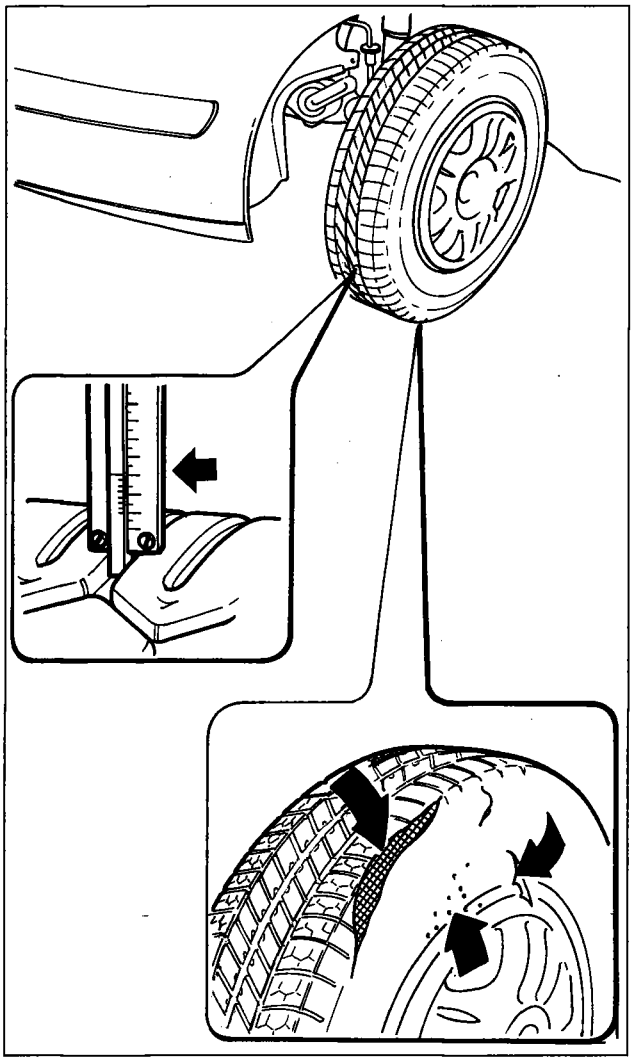

P4F01BA01

1 CHECK CONDITION OF TYRES AND WEAR

Check the condition of the tyres making sure, in particular, that there are no signs of ageing on the tread and the tyre walls, that the tyres are not excessively/unevenly worn, that there are no abrasions/burrs, porousness or cuts.

Check the depth of the tread using a special gauge, taking the measurement at the intersection between the transverse and longitudinal splining (at several points on the circumference). The minimum permissible depth is 1.6 mm. The difference between the depths of tread ont he same tyre should not exceed 2 mm. The difference between the depths of tread on different tyres on the same axle should not exceed 5 mm.

If the tread wear is uneven, check the tyre inflation pressure and inform the Customer of the possible need to balance the wheels.

Copyright by Fiat Auto

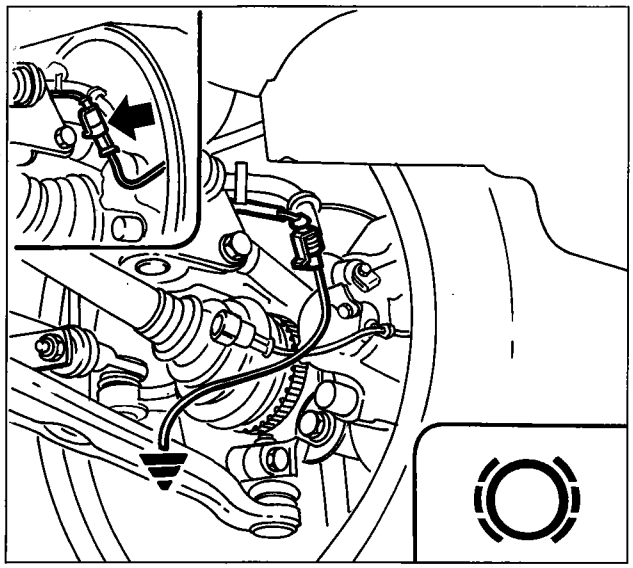

P4F02BA01

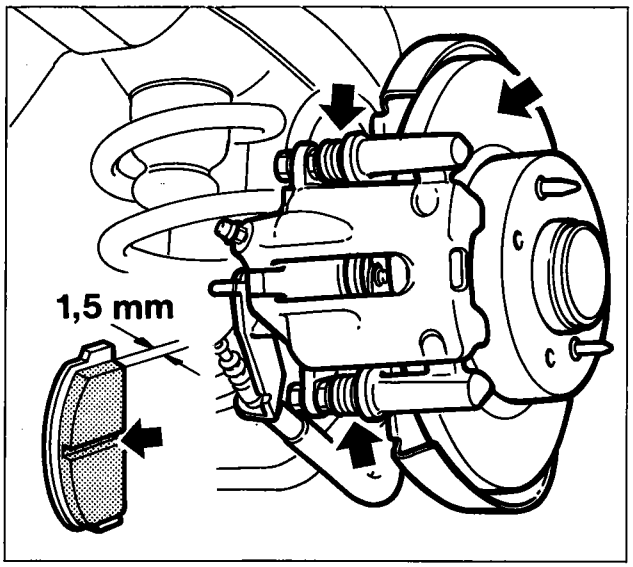

P4F02BA02

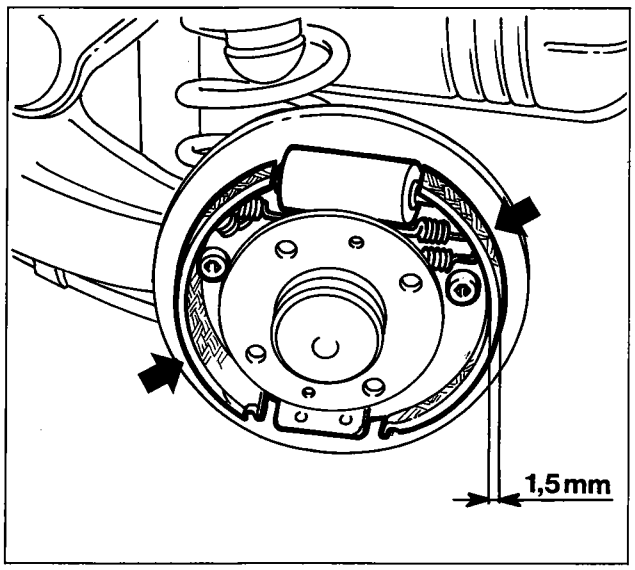

P4F02BA03

2 CHECK OPERATION OF FRONT DISC BRAKE PAD WEAR SENSOR

Disconnect the connector for the front disc brake pad wear sensor, place the terminal for the wiring side coupling to earth and check that the relevant light in the instrument panel comes on.

3 CHECK CONDITION OF REAR DISC BRAKE PADS (Marea 1998 20v - 2387 TD)

Remove one of the rear wheels and check the thickness of the pad through the slit in the brake caliper; the minimum permissible thickness is 1.5 mm. Check that the surfaces of the pads are evenly worn. Visually inspect the condition of the working surfaces of the brake discs (for wear or deep grooves). Notify the Customer of the need to replace or regrind (in the case of a brake disc) one of the components which has been checked.

4 CHECK CONDITION AND WEAR OF REAR DRUM BRAKES

With one of the rear wheels removed, remove the brake drum. Check the thickness of the brake linings: the minimum permissible thickness is 1.5 mm. Also check that there is no fouling from oil or grease. Check the efficiency of the shoe return device and the automatic recovery of the clearance between the drum and the shoes. Check the efficiency of the wheel cylinders (sliding of pistons, condition of dust boots). Check the condition of the brake drum work surfaces (for wear or grooves). Notify the Customer of the need to replace or skim (in the case of brake drums) one of the components which has been checked.
If there is an inspection window in the brake drum it is possible to check the thickness of the brake linings withouthaving to remove the actual drum.

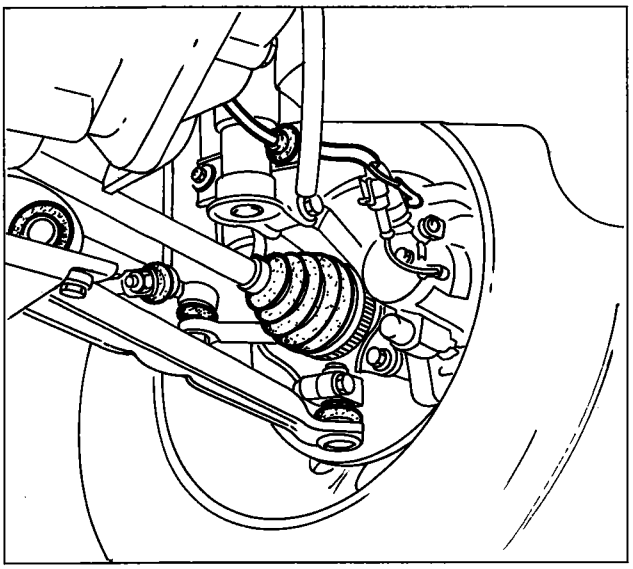

P4F03BA01

5 VISUALLY INSPECT CONDITION OF: PIPES, RUBBER ELEMENTS, BRAKING AND FUEL SYSTEM FLEXIBLE PIPES

Position the vehicle on a lift. Visually inspect:

- for the presence of any fluid leaks from the following systems: lubrication, fuel, engine cooling, braking and power assisted steering;
- the condition of rubber elements: bushes, flexible (support) mountings and (protective) boots; check that the collars retaining the pipes and bushes have not loosened.

Check that the wires and cables for the retaining brackets in the engine compartment are correctly positioned.

Also check for possible interference of the flexible brake pipes in maximum steering conditions.

6 CHECK TENSION AND, IF NECESSARY, ADJUST VARIOUS DRIVE BELTS

The tension of the various drive belts is checked using tool 1895762000. Engines fitted with automatic tensionsers are exempt from this check.

Marea 1581 16v

Check that the tension values for the alternator drive belt and the power steering drive belt measured using the special tool correspond to the recommended figures, given in the table at the foot of this paragraph. If the tension values are not correct, loosen the bolt (1) and rotate the tensioner further via the special hexagonal opening, then tighten the bolt once again and check the tension of the alternator drive belt. To adjust the power steering pump drive belt, regulate the adjustment screw and the lock nut (2).

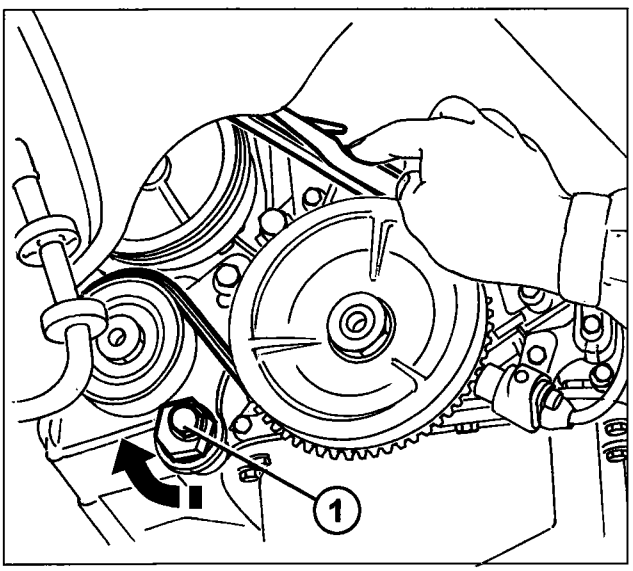

P4F03BA02

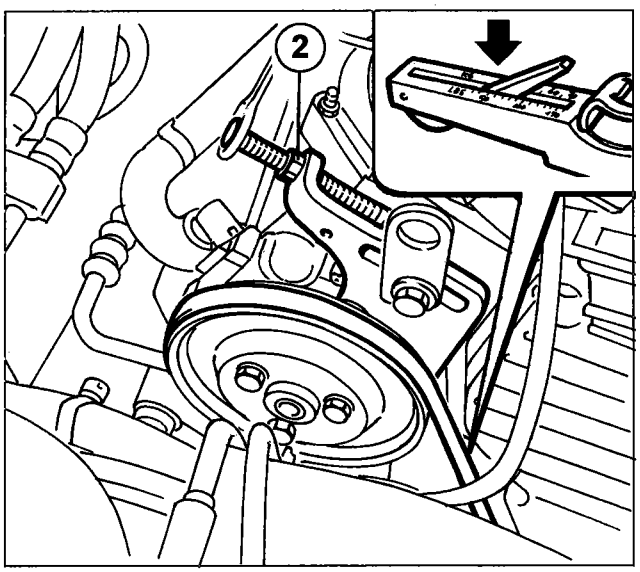

P4F03BA03

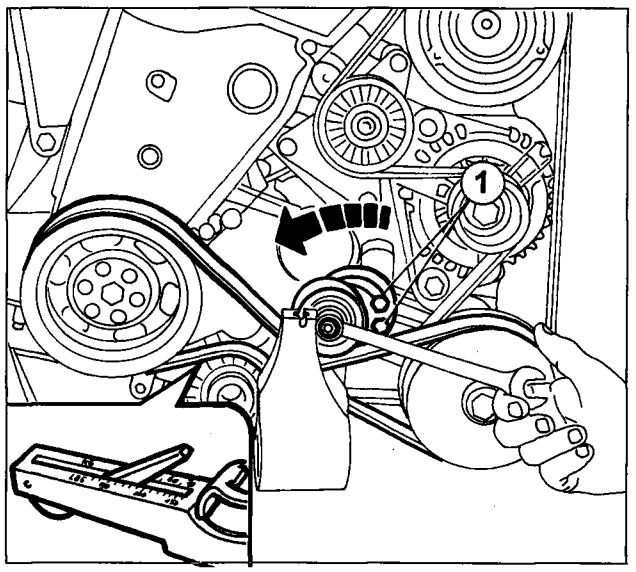

P4F04BA01

Marea 1998 20v

Check that then tension values for the alternator/air conditioning compressor drive belt and the power steering drive belt measured using the special tool, correspond to the recommended figures, given in the table overleaf. If the tension values for the adjustment of the power steering belt are not correct, regulate the centre tensioner screw, with the fixing bolts (1) slack, then tension and lock the bolts (1).

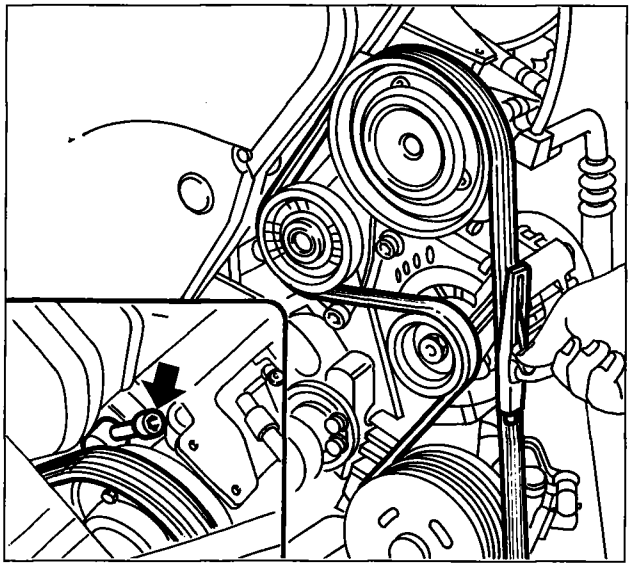

P4F04BA02

To adjust the tension of the alternator/air conditioning compressor drive belt, regulate the special adjustment screw, removing the compressor cover if necessary.

Tension values for used belts

BELT SECTION			TENSION daN
AV 10	TYPE A	Not pre-run in	20 ÷ 29
	TYPES B and C	Not pre-run in	25 ÷ 35
AV 11	TYPES B and C	Not pre-run in	25 ÷ 35
AV 13	TYPE A	Not pre-run in	30 ÷ 40
	TYPES B and C	Not pre-run in	32 ÷ 43
POLY-V	3 ribs		23 ÷ 30
	4 ribs		30 ÷ 41
	5 ribs		38 ÷ 53
	6 ribs		45 ÷ 62
	7 ribs		54 ÷ 74

Tension values for new belts

BELT SECTION		TENSION daN
AV 10	TYPE A	30 ÷ 40
	TYPE B and C	40 ÷ 55
AV 11	TYPE B and C	40 ÷ 55
AV 13	TYPE A	45 ÷ 55
	TYPE B and C	50 ÷ 65
POLY-V	3 ribs	36 ÷ 45
	4 ribs	48 ÷ 60
	5 ribs	60 ÷ 75
	6 ribs	72 ÷ 90
	7 ribs	84 ÷ 105

Poly-V type belts

In order to determine the number of ribs on the poly-v belt in question it is necessary to count the number of teeth (or points) from 3 - 7 on the actual belt, as illustrated in the diagram below.

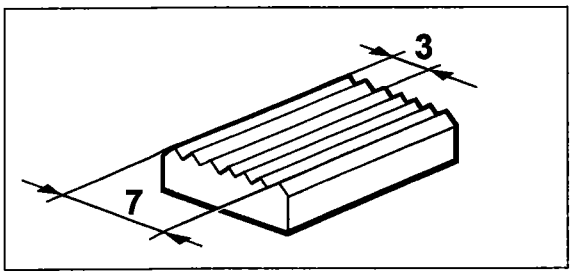

P4F05BA03

Trapezoid type belts

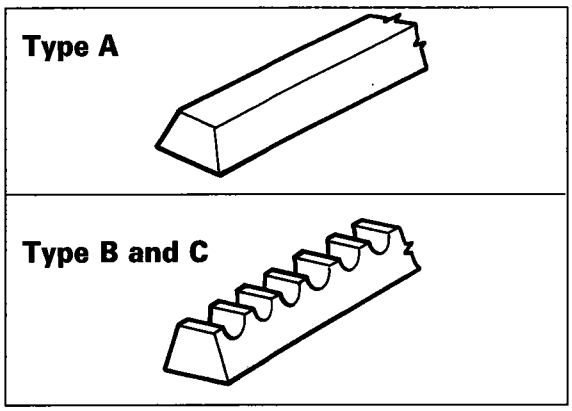

P4F05BA01

In order to determine whether the trapezoid belt in question is type AV 10 - AV 11 - etc., it is necessary to measure distance "**X**" on the back of the belt; if the figure is 10 mm then the belt is a type AV 10, if it is 11 mm then it is type AV 11 and so on.

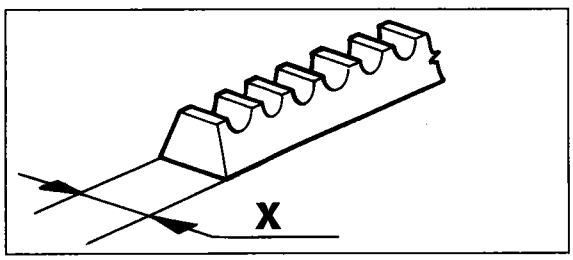

P4F05BA02

Copyright by Fiat Auto

00.

7 VISUALLY INSPECT CONDITION OF TRAPEZOID AND/OR VARIOUS POLY-V DRIVE BELTS

- Disconnect the negative battery lead, remove the right front wheel, then remove the wheel arch liner to gain access to the auxiliary shaft drive belts.
- Insert an adjustment spanner in the nut or bolt fixing the damper flywheel (1), rotate the crankshaft and check the condition of the auxiliary shaft drive belts along the entire perimeter.

Check the condition of the belts, checking in particular that there are no: cracks, cuts, surface wear of the material (which would appear smooth and shiny), dry or hard sections with a consequent loss of grip.
Also check that the belts have not come into contact with oil or solvents which could adversely affect the elasticity of the rubber or the adhesion properties.
If one of the above faults is found, inform the Customer of the need to replace the belts.

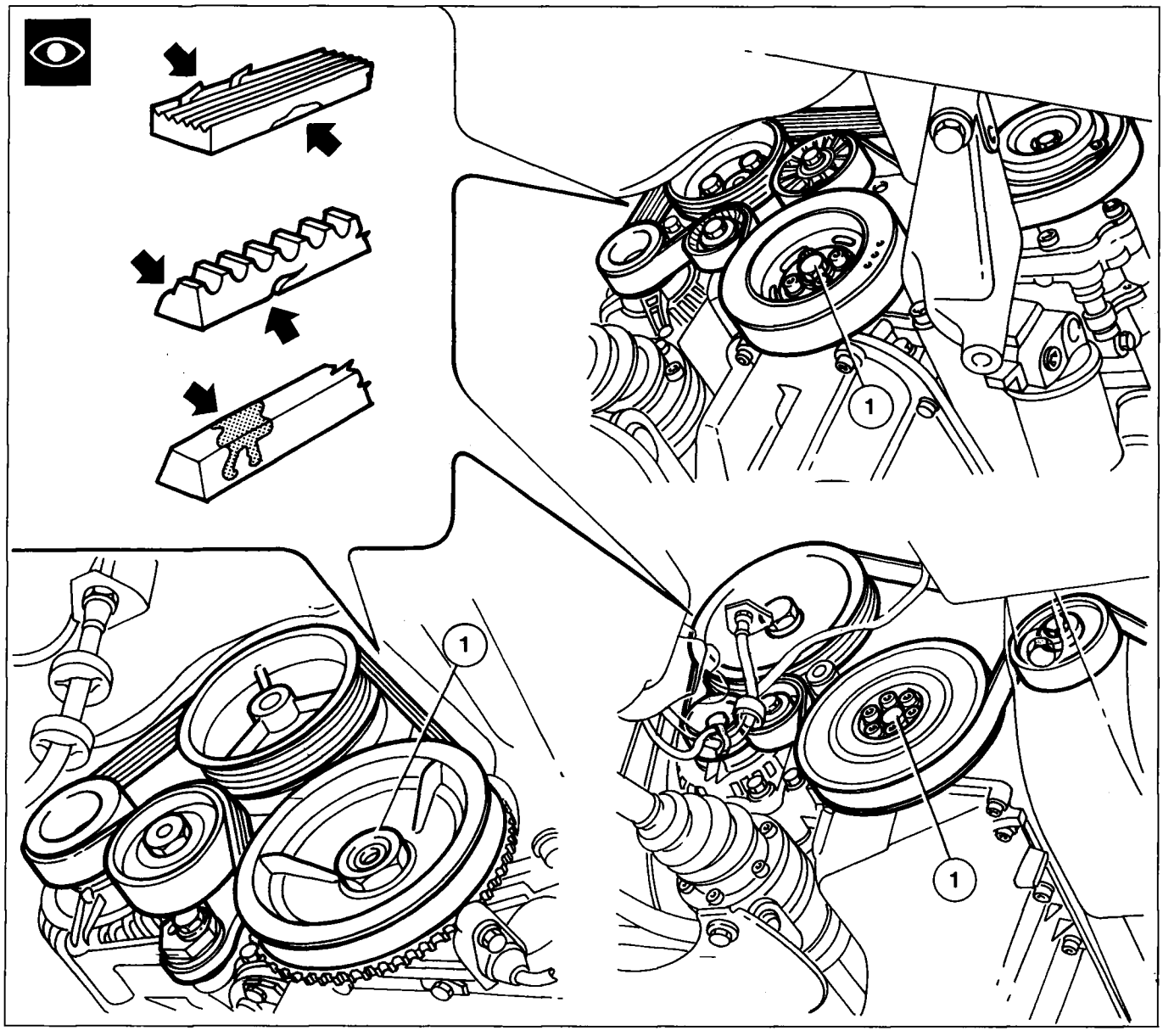

P4F06BA01

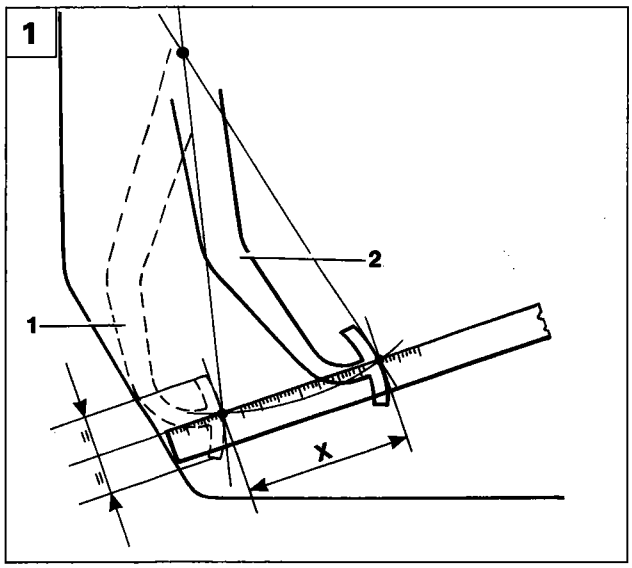

P4F07BA01

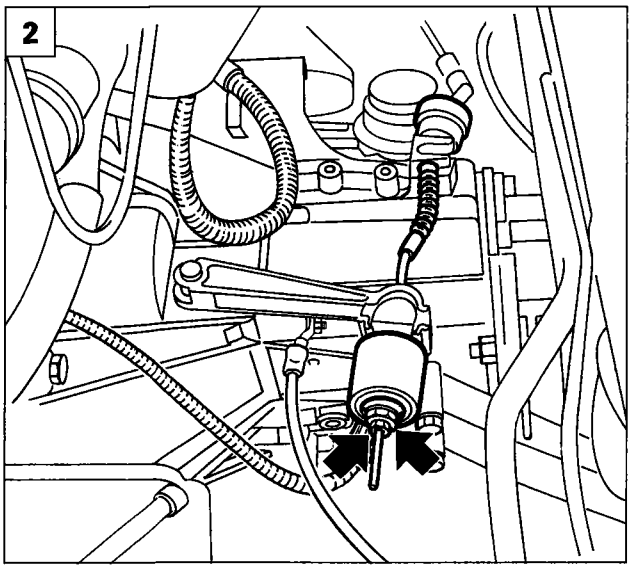

P4F07BA02

8 CHECK, ADJUST CLUTCH PEDAL TRAVEL OR HEIGHT

This check should only be carried out on vehicles with mechanical release devices (1370 12v - 1581 16v - 1747 16v - 1910 TD). The 1998 20v and 2387 TD versions have a hydraulic release device fitted.

1. Measure the clutch pedal travel:
   1. Pedal in end of travel position
   2. Pedal in rest position
   X. Pedal travel:
   155 ± 10 mm (1370 12y)
   170 ± 10 mm (1581 16v - 1747 16v - 1910 TD)
2. In order to adjust the clutch pedal in the rest position it is necessary:
   - to let the clutch operating mechanism bed in fully depressing the pedal 2 or 3 times;
   - to check that the travel "X" corresponds to the recommended figure. The travel is measured using a rule corresponding to the pedal centre line and is equivalent to the distance between the pedal in the end of travel position (pedal in contact with the bodyshell) and the pedal in the rest position;
   - any adjustments to the travel are carried out via the nut and lock nut for the clutch cable, gearbox side.

NOTE *There should be no obstructions in the area under the pedals preventing the total travel of the pedals: take care, in particular, that any mats are lying flat and not interfering with the pedals.*

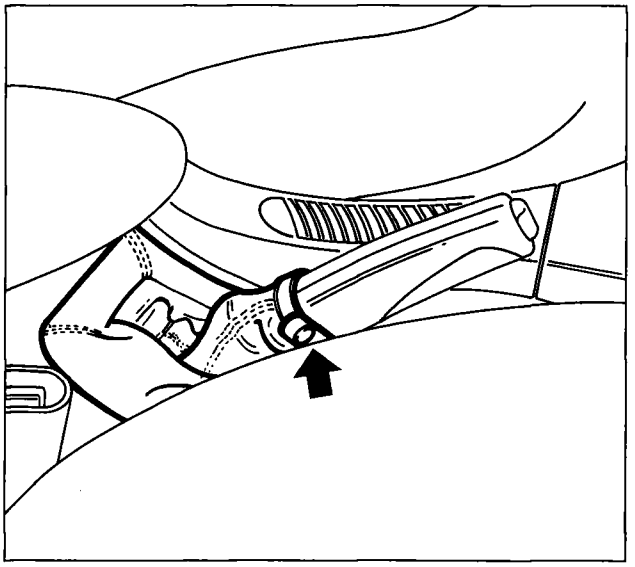

P4F08BA01

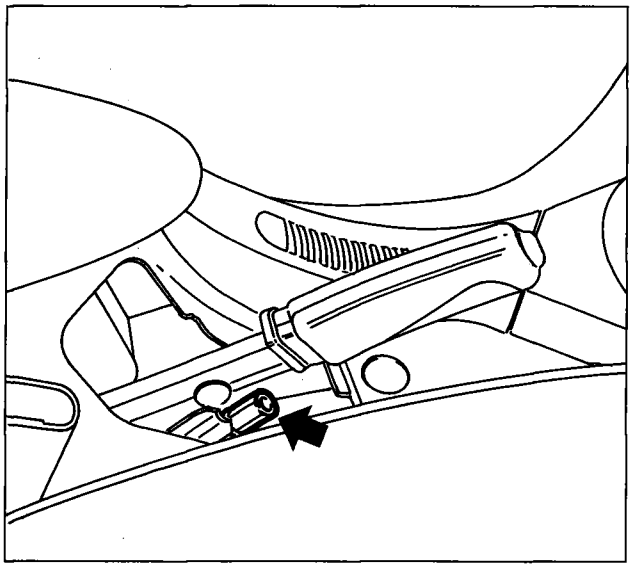

P4F08BA02

9 CHECK/ADJUST HANDBRAKE LEVER TRAVEL

Operate the handbrake lever several times and check that the travel of the toothed sector is equivalent to 5 notches.

If this is not the case, proceed with the adjustment as follows:

- remove the protective boot for the control lever;
- regulate the adjustment nut shown, tightening or loosening it in order to increase or decrease the handbrake cable travel;
- check that the lever travel is equivalent to 5 notches of the toothed sector.

When the adjustment has been carried out, the control lever travel should not exceed 5 notches of the toothed sector.

With the handbrake lever in the rest position the rear wheels should rotate freely; if this is not the case, repeat the adjustment.

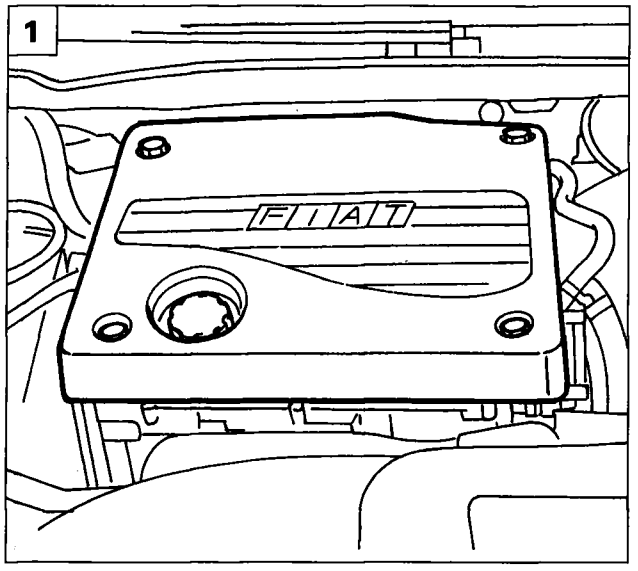

P4F01EX01

10 CHECK/ADJUST TAPPET CLEARANCE

The following components must be removed in order to check and, if necessary, adjust the tappet clearance.

Marea 1910 TD

1. Remove the upper engine protection.

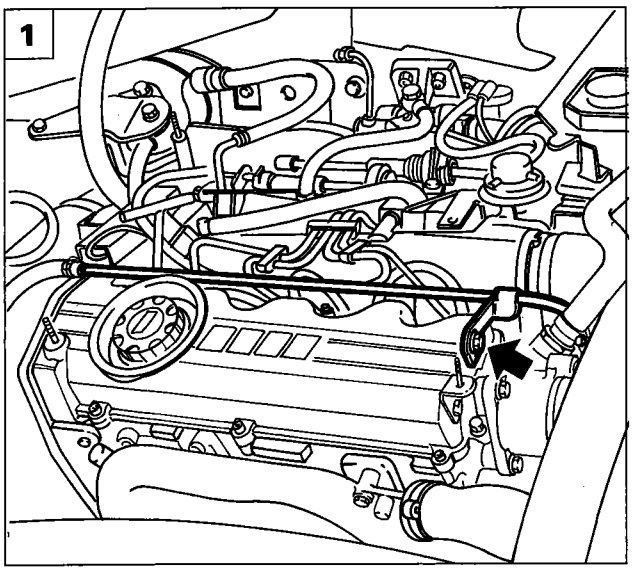

P4F09BA01

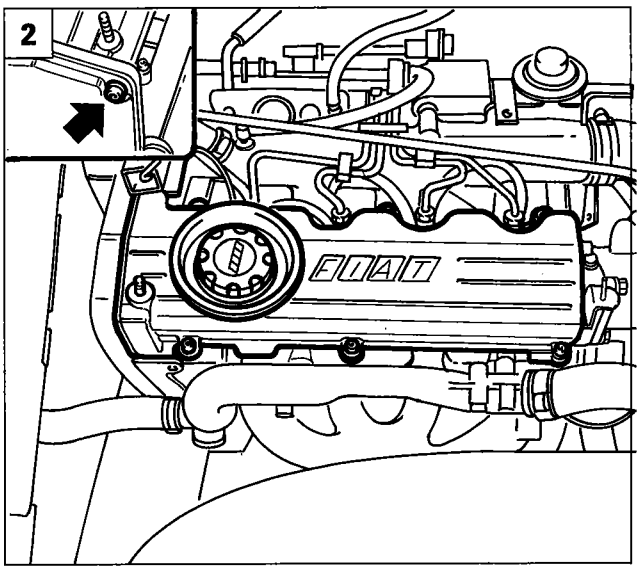

P4F09BA02

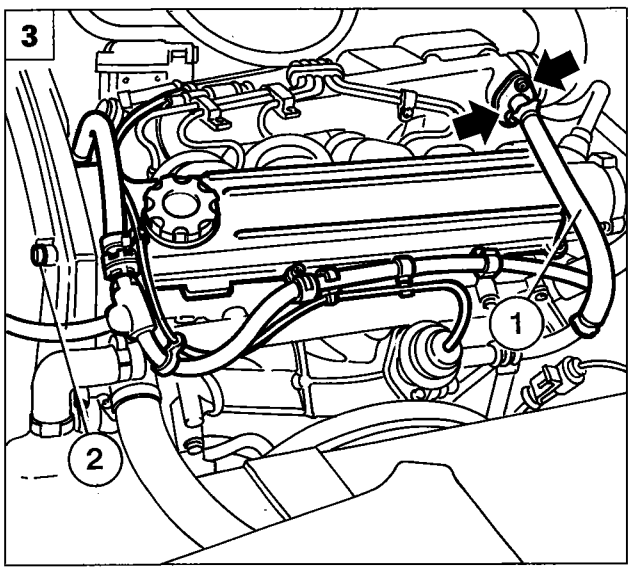

P4F09BA03

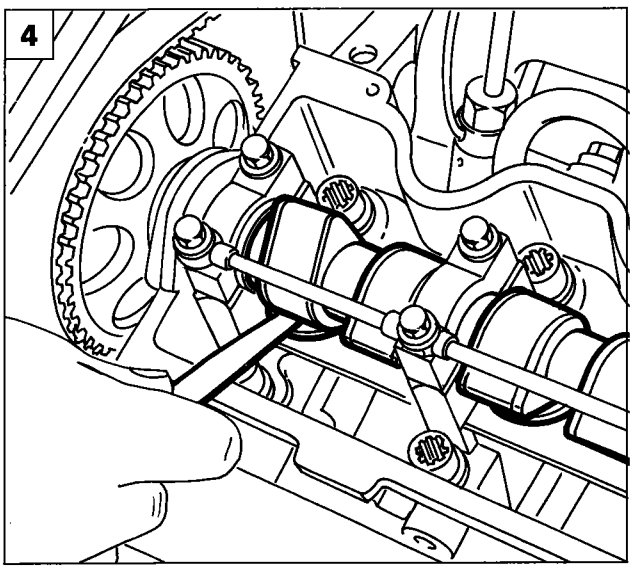

P4F09BA04

1. Disconnect the rigid engine coolant pipe using tool 1860967000 to undo the connector at the cylinder head; also undo the bolt shown and position the pipe at the side.
2. Undo the bolts fixing the tappet cover and remove it, taking care to disconnect the oil vapour recovery pipe and the bolt shown in the inset fixing the timing belt cover to the tappet cover. Then proceed with checking the tappet clearance.

Marea 2387 TD

3. Disconnect the pipe (1) connected to the EGR valve, release the engine cooling system pipes from the retaining bands on the tappet cover. Loosen the bolt (2) fixing the timing belt cover, then undo the bolts fixing the tappet cover and remove it.

Checking tappet clearance and adjusting, if necessary

4. Rotate the camshaft so that the inlet and exhaust valves are in the closed position. With the engine cold, check that the clearance between the cam recess radius and the tappet are within the recommended values using a feeler gauge:

Engine type	1910 TD 2387 TD
Inlet Exhaust	0.35 ± 0.05 mm

Copyright by Fiat Auto

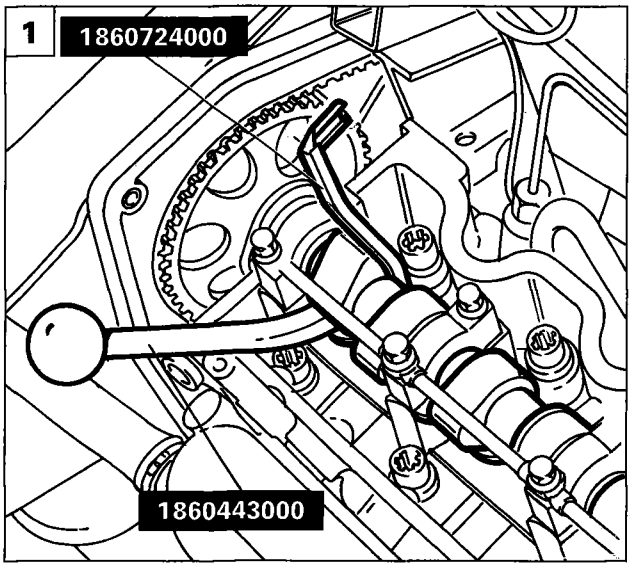

P4F10BA01

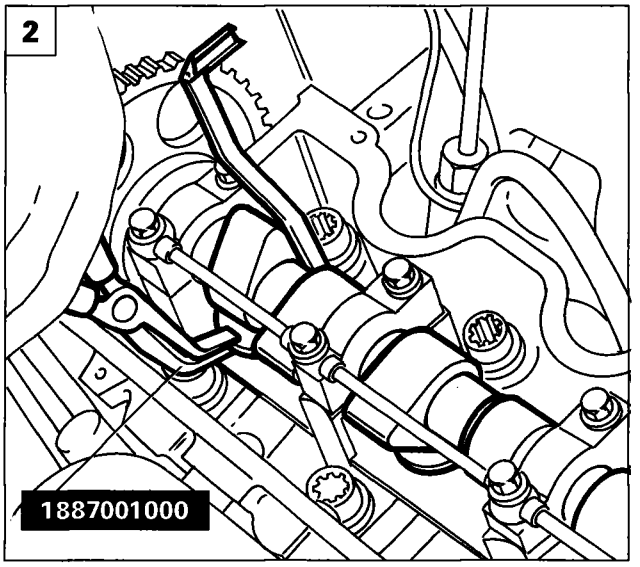

P4F10BA02

If the tappet clearance does not correspond to the recommended figures, proceed as follows:

1. Using pressure lever 1860443000, lower the cup for the tappet concerned and insert tool 1860724000 for retaining the tappets positioning the notches in such a way as to facilitate the subsequent extraction of the shim to be replaced.
2. Lift up the shim to be replaced, working as appropriate, then remove it using pliers 1887001000.

NOTE *Replace the shim removed with another one of the appropriate size to restore the correct valve clearance. Carry out the same operation for the other shim for the pair of valves being adjusted.*

11 CHECK EXHAUST GAS EMISSIONS (petrol engines)

The electronic injection/ignition systems used are capable of automatically controlling the advance, the carbon monoxide (CO) content and the idle air flow rate, therefore no manual adjustment operations are required. However, a check on the content of the exhaust gases downstream of the catalyzer can provide useful indications on the injection/ignition system operating conditions and the engine and catalyzer parameters.

The concentration of carbon monoxide (CO), unburnt hydrocarbons (HC) and the value λ, is measured with the catalyzer at operating temperature (300 - 350 °C) (we recommend driving hard along a section of road for around 5 to 10 minutes to ensure that the catalyzer reaches operating temperature), then insert a suitably calibrated tester sensor at least 30 cm into the end of the exhaust pipe as shown in the diagram overleaf.

If the shape of the end section of the exhaust pipe is such that the sensor cannot be fully introduced, add a special extension pipe ensuring the seal in the join area.

1. Check that the concentration of CO and the value λ during idling and accelerated idle, correspond to the figures recommended in the government circular:

Engine measurement during idling: CO limit ≤0.5% vol.

Measurement for accelerated idle (2000 - 2500 rpm): CO limit ≤0.3% vol.

Lambda = 1 ± 0.03

If the values are not within the limits set out in the government circular, the Customer must be notified of the need to check:

- that the Lambda sensor is working properly using the Fiat/Lancia tester;
- for the presence of air penetration in the area surrounding the Lambda sensor housing;
- the injection system, particularly the wear of the spark plugs.

2. If the HC figure is more than 90 p.p.m., the cause of the problem should be sought in the engine timing or the decreased efficiency of the catalyzer.

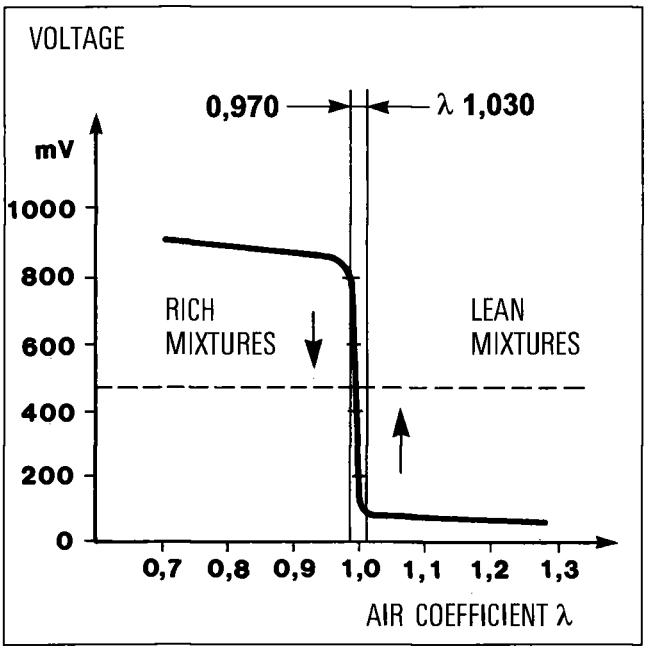

P4F11BA01

Factor λ is obtained from the ratio between the quantity of intake air and the theoretical quantity of air required to burn all the fuel injected.

To achieve an optimum mixture the quantity of fuel injected must be as close as possible to the theoretical quantity required to be completely burnt in relation to the quantity of air drawn in by the engine. In this case the Lambda factor is equal to 1 (ideal mixture) and the CO content is within the legal limits. With $\lambda \geqslant 1$ (lean mixture), excess air, the CO tends to assume low values: with $\lambda \leqslant 1$ (rich-mixture), lack of air, the CO values tend to be high.

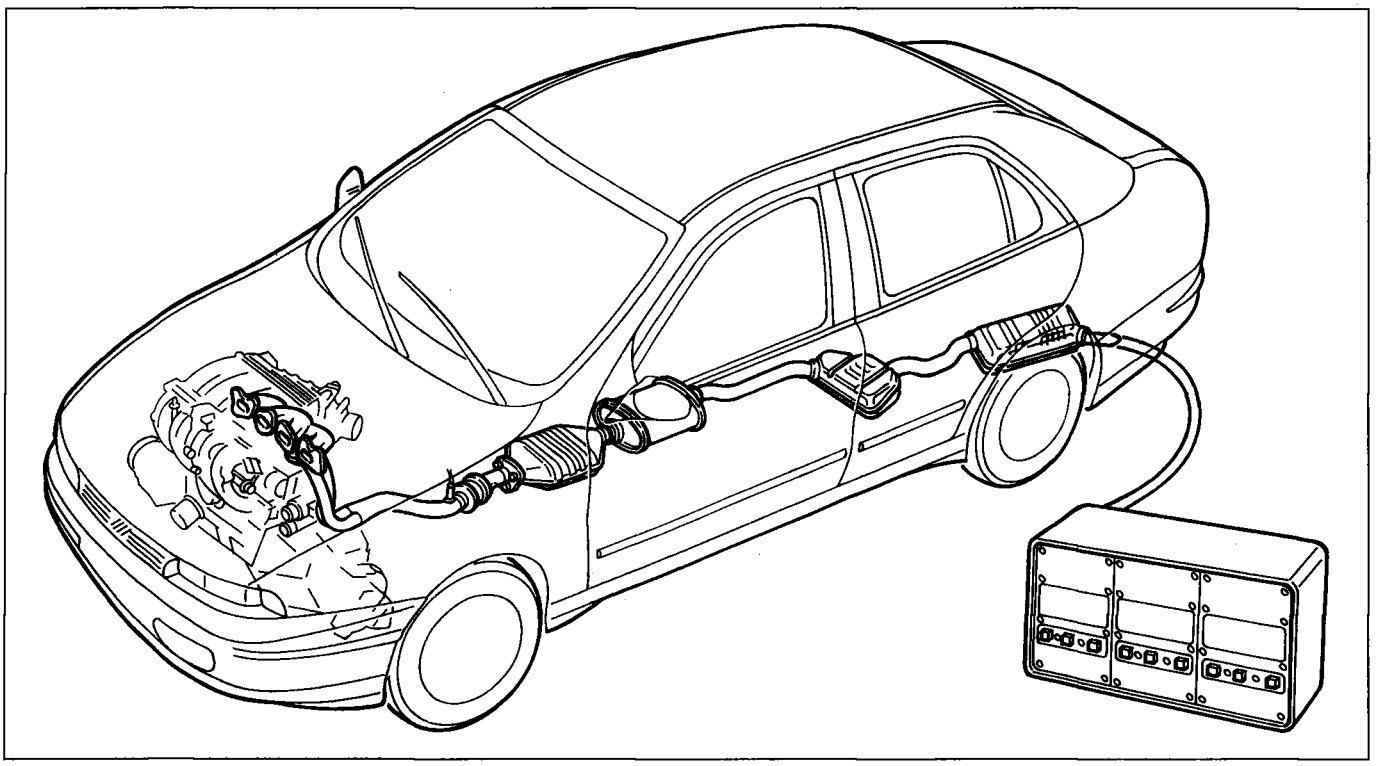

P4F11BA02

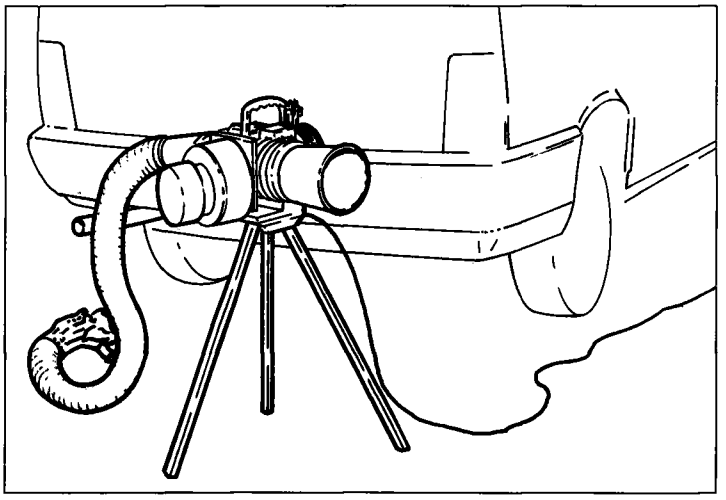

P4F12BA01

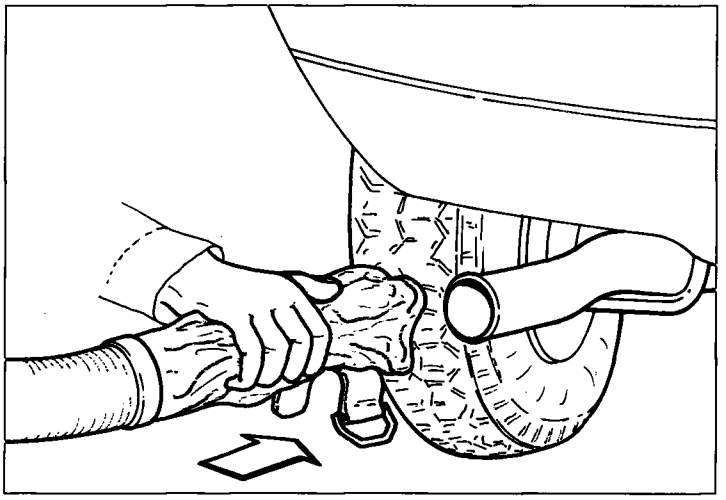

P4F12BA02

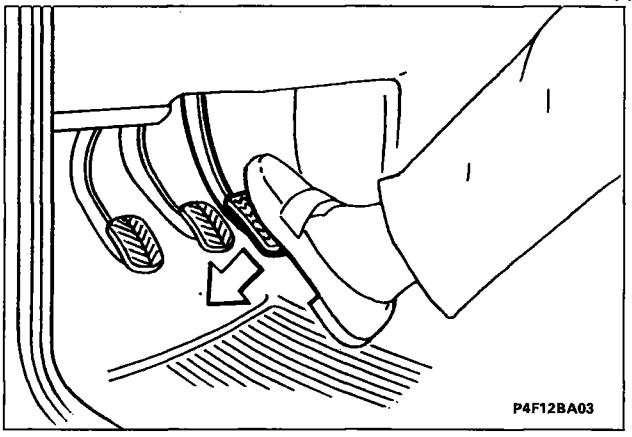

P4F12BA03

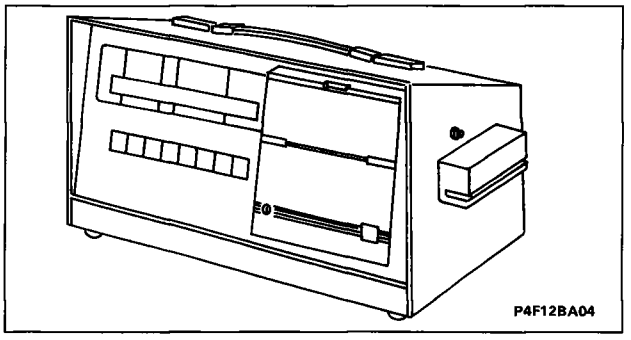

P4F12BA04

11 CHECKING EXHAUST GAS EMISSIONS (diesel engines using opacity meter)

Start up the engine and let is reach operating temperature (radiator cooling fan comes on twice).
Place the opacity meter measuring unit in a stable position near the vehicle exhaust pipe (the opacity meter exhaust must be positioned against the wind).

Connect the measuring unit flexible pipe with the vehicle exhaust pipe.

Carry out the equipment connections and adjustments in accordance with the Manufacturers' instructions.

Fully depress the accelerator three times in quick succession so that the engine revs limiter speed is reached.

Carry out measurements for five subsequent full accelerations.
Make a note of the maximum values reached.
To obtain the figure for the test, calculate the arithmetical average of the three closest values.
If there is more than one suitable trio, select the one which gives the highest average value.

Compare the values with the limit given on the plate on the vehicle conforming with the EEC directive.

Where figures are not avaible, apply the following limits from directive 92/55/EEC:

Naturally aspirated diesel engine:
K = 2,5 m^{-1}

Diesel engine with turbocharger:
K = 3 m^{-1}

If the figure for the exhaust fumes is more than 70%, notify the Customer of the need to carry out a series of tests on: the condition of the air filter, injection pump timing and flow rate, valve clearance and timing, injector calibration and cleanliness, compression ratio.

12 CHECK ANTI-EVAPORATION SYSTEM

The anti-evaporation system prevents the petrol vapours, which form in the tank and the fuel system, from being discharged into the atmosphere and and consequently releasing the light hydrocarbons (HC) which they contain, producing a pollutant effect.

It is therefore necessary to check that the anti-evaporation system pipes are correctly positioned in the engine compartment; also check their condition, making sure that there are no signs of cracks, cuts or leaks and that they are correctly fixed and not interfering with other components. Check the condition of the active charcoal filter. Position the vehicle on a lift and check the condition of the pipes under the floor of the vehicle.

13 REPLACE FUEL FILTER (petrol engines)

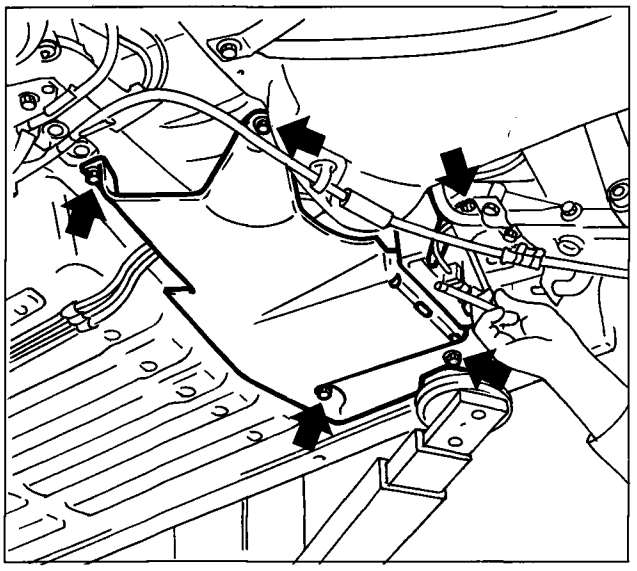

P4F13BA01

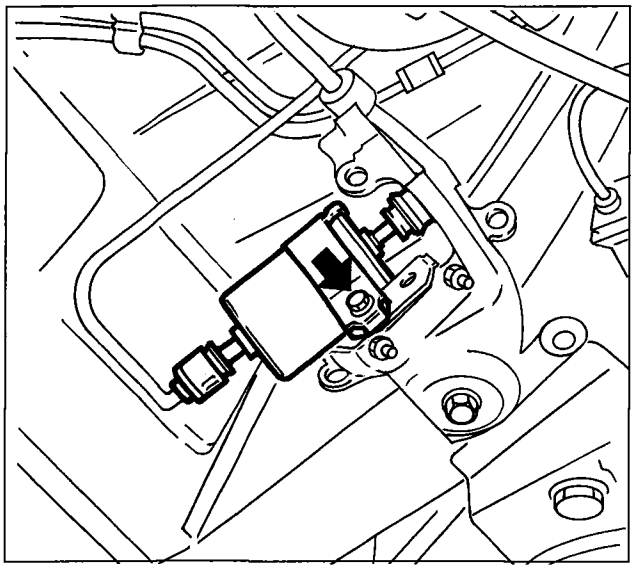

P4F13BA02

Proceed with removing the fuel filter by carrying out the following operations:

- Raise the vehicle;
- undo the bolts shown in the diagram and remove the protective shield.
- disconnect the rapid fuel inlet and outlet connectors from the filter acting on the retaining bands and collecting the fuel which comes out during this operation in a suitable container.
- undo the fixing bolt and remove the filter.

NOTE *The filter should NEVER BEFITTED THE WRONG WAY ROUND, or else it has to be replaced (even after working in the wrong position for a short period). The arrow on the outer casing indicates the direction in which the fuel should flow.*
After replacing the filter, start up the engine and check that there are no leaks of fuel from the seals.

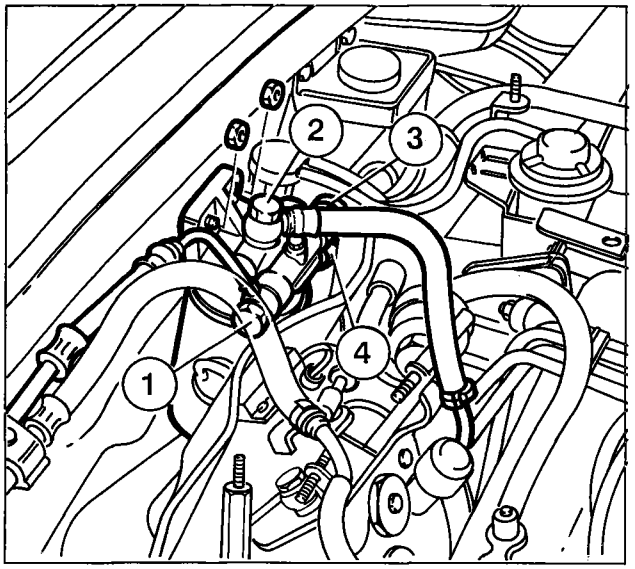

Marea 1910 TD

P4F14BA01

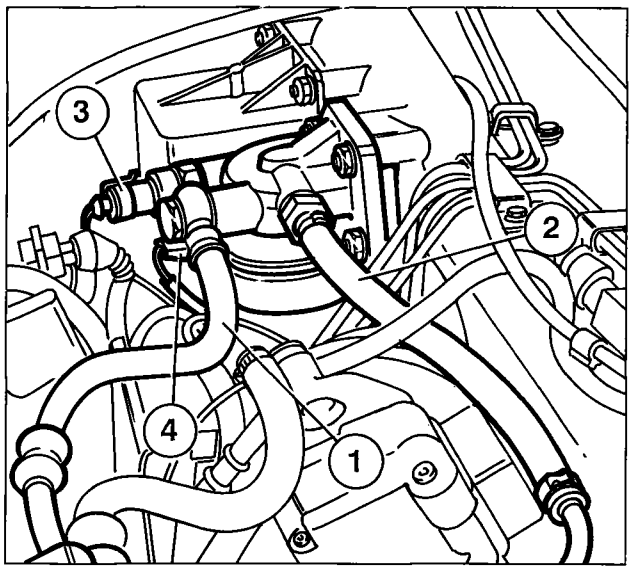

Marea 2387 TD

P4F14BA02

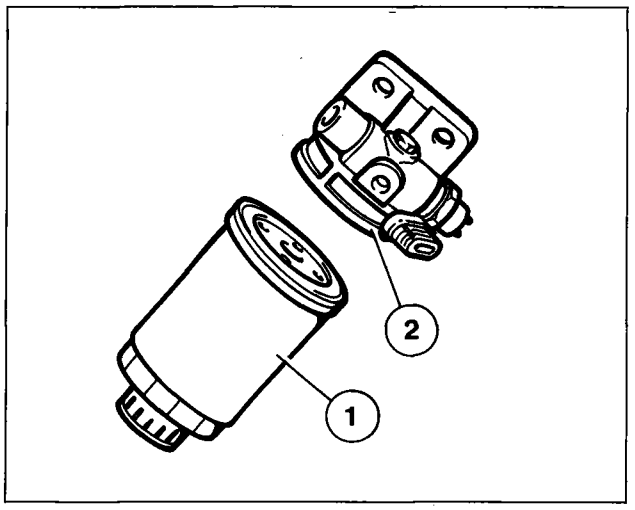

P4F14BA03

14 REPLACE FUEL FILTER (diesel engines)

To replace the fuel filter, after having disconnected the negative battery lead, proceed as follows:

- Disconnect the connector (1) for the fuel supply pipe from the tank from the filter;
- Disconnect the connector (2) for the fuel supply pipe tothe injection pump from the filter;
- Disconnect the electrical connection (3) from the fuel pre-heating device sensor;
- Disconnect the electrical connection (4) supplying the fuel pre-heating device;
- Undo the nuts fixing the partition between the passenger and engine compartments and remove the complete fuel filter.
- At the bench, undo the fuel cartridge (1) with the seal from the support (2).

When refitting the fuel filter, proceed as follows:

- lubricate the cartridge rubber seal;
- fill the filter cartridge with diesel fuel (in order to shorten the self-bleeding time);
- tighten the cartridge in contact with the support;
- close the cartridge by 3/4 of a turn (to achieve a tightening torque of 1.3 - 1.6 daNm).

15 16 REPLACE AIR FILTER CARTRIDGE

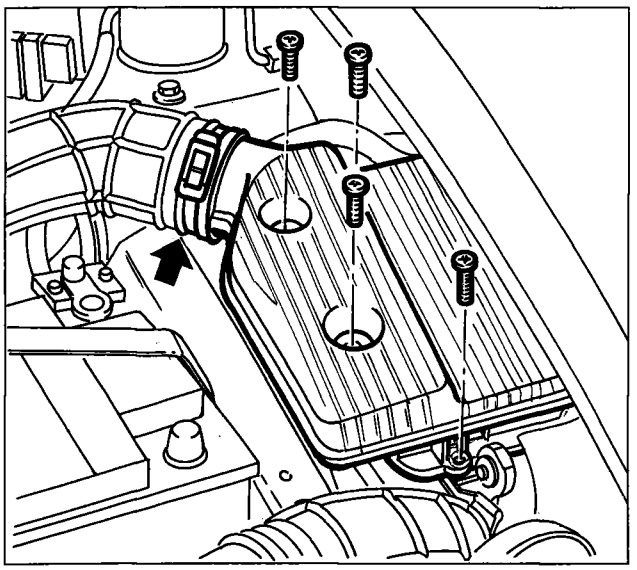

P4F15BA01

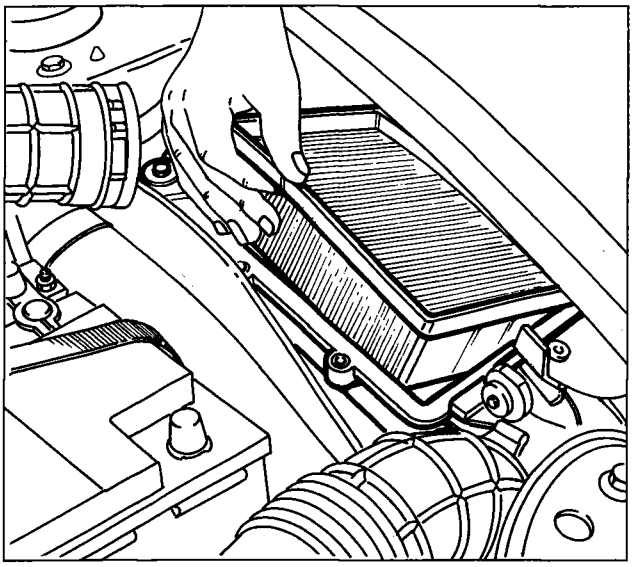

P4F15BA02

Undo the bolts fixing the air filter cover. Lift up the cover and extract the filter element; to facilitate this last operation, releasethe retaining band for the connecting hose to the butterfly casing.

Any cleaning operation could damage the filter and risk adversely affecting the operation of the engine fuel system.

Clean the air filter cartridge container carefully, replace the filter, then refit the cover and fix it using the appropriate bolts.

NOTE *If the filter which has been removed has traces of oil, check for possible penetration throughout the entire air circuit.*

NOTE *If the vehicle is used on dusty roads, replace the air filter more often.*
If the Customer asks, provide them with suitable information concerning the optimum maintenance frequencies depending on the specific usage of the vehicle.

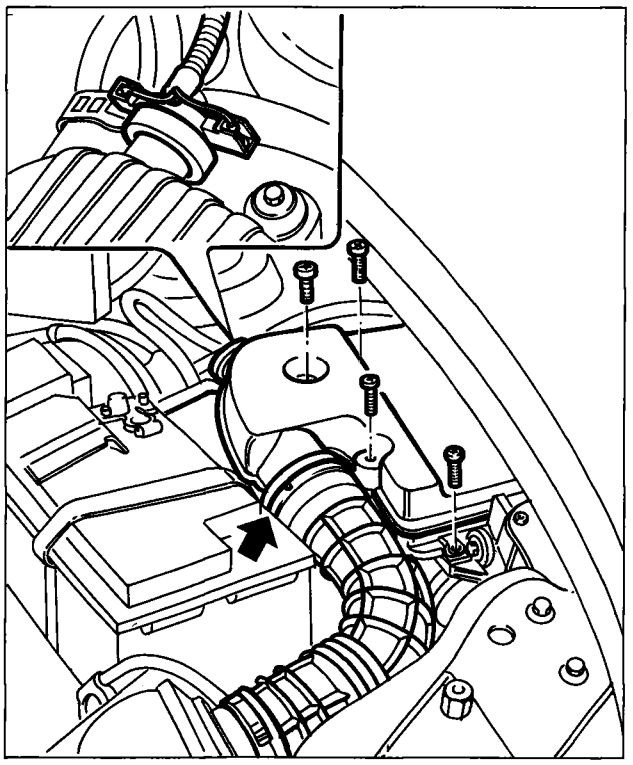

P4F16BA01

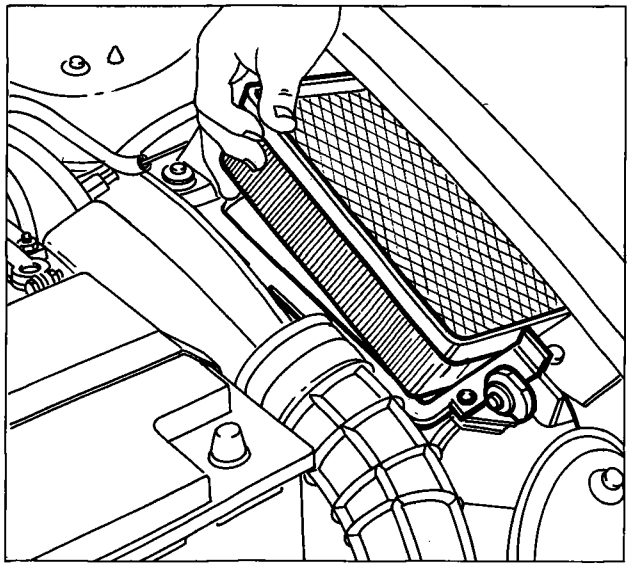

P4F16BA02

Marea 2387 TD

The Marea 2387 TD is equipped with a device warning that the air filter is blocked. In certain usage conditions (driving behind other vehicles in heavy rain/snow) the filter may become temporarily obstructed; if this is the case, the warning light in the dashboard will come on.

To gain access to the air filter the electrical connector for the blockage warning device must be disconnected from the air filter container cover, shown in the inset, the fixing bolts undone, the hose connected to it released and the actual cover removed.

If the warning light comes on at a slightly lower mileage than recommended for replacing the filter, then remove the filter and replace it; if this is not the case, then check the condition of the filter and, if necessary, notify the Customer of the need to replace the actual filter prematurely.

Thoroughly clean the air filter cartridge container, replace the filter, refit the cover and connect the hose and connector disconnected during the dismantling.

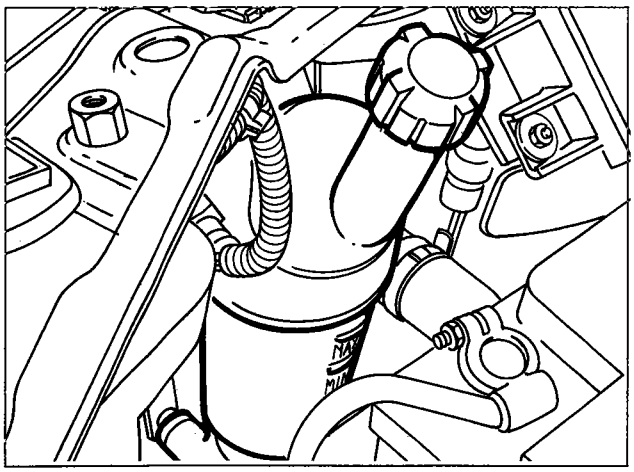

P4F17BA01

1370 12v - 1581 16v

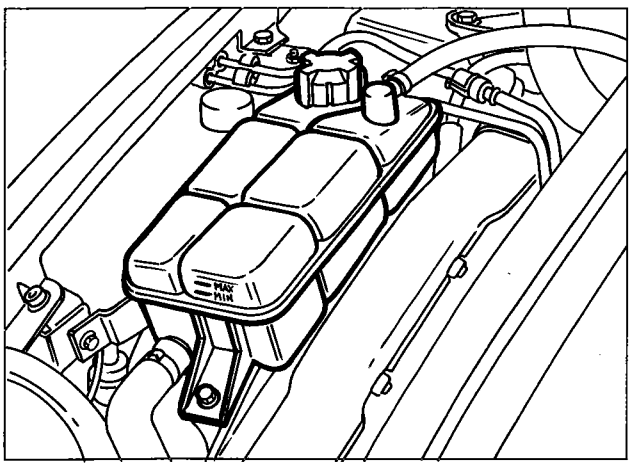

P4F17BA02

1747 16v - 1998 20v - 1910 TD - 2387 TD

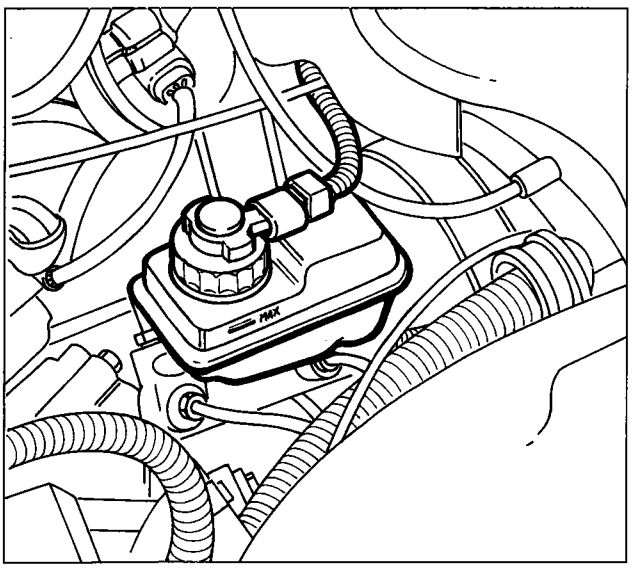

P4F17BA03

17 TOP UP FLUID LEVELS

Engine coolant

Do not remove the radiator cap when the engine is very hot as there is a danger of being scalded.

The fluid level should be checked with the engine cold and it should not be below the MIN level on the tank.

If the level is too low, slowly pour a mixture of 50% distilled water and Fiat Lubrificanti Paraflu 11 through the filler.

NOTE *The addition of "Paraflu Formula Europa" to Paraflu 11 used originally means that it is not possible to check the efficiency of the anti-freeze using the regular test equipment. "Paraflu Formula Europa" is already mixed which means that water does not have to be added.*

Brake fluid level

The brake fluid level is checked with the vehicle on a flat surface.

Check that the level of the fluid in the tank corresponds to the MAX reference on the tank.

It is normal for the brake fluid level to decrease over a period of time because this indicates that the brake pads are working properly.

The level of the brake fluid should not exceed the MAX level in the tank.

Check the operation of the warning light in the instrument panel: when the cover of the tank is pressed (with the ignition in the ON position) the warning light (!) should come on.

Copyright by Fiat Auto

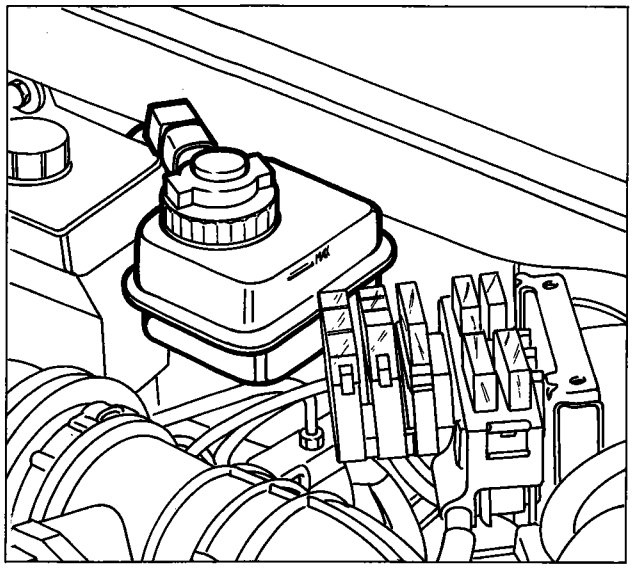

P4F18BA01

If fluid has to be added, use only DOT4 classification. Tutela TOP 4 270°C, which is used initially, is particularly recommended.

Avoid the brake fluid, which is particularly corrosive, from coming into contact with the paintwork. If it does, wash immediately with water.

The symbol ⊚, present on the container, identifies synthetic type brake fluids, distinguishing them from mineral types. The use of mineral type fluids irreparably damages the rubber seals in the braking system.

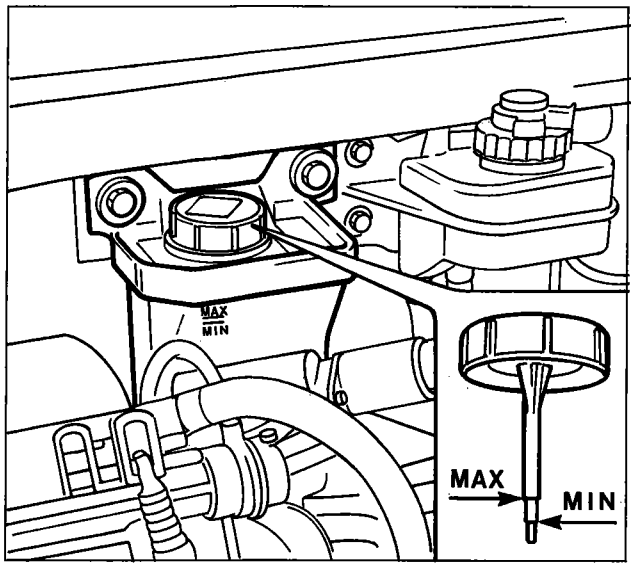

P4F18BA02

Power steering fluid level

Check that, with the vehicle on a flat surface and the engine cold, the fluid level is between the MIN and MAX references on the dip stick in the tank cap or on the actual tank.

In order to carry out the check, clean the dip stick, fully tighten the cap, undo it and check the level.

When the fluid is hot it may exceed the MAX level.

If necessary, add fluid, making sure that it has the same characteristics as the fluid already present in the system.

Start up the engine and wait until the level of the fluid in the tank stabilizes.

With the engine running and the vehicle stationary, turn the steering wheel completely to the right and to the left several times.

Top up until the level corresponds to the MAX reference, then retighten the cap.

Avoid power steering fluid coming into contact with the hot parts of the engine as it is inflammable.

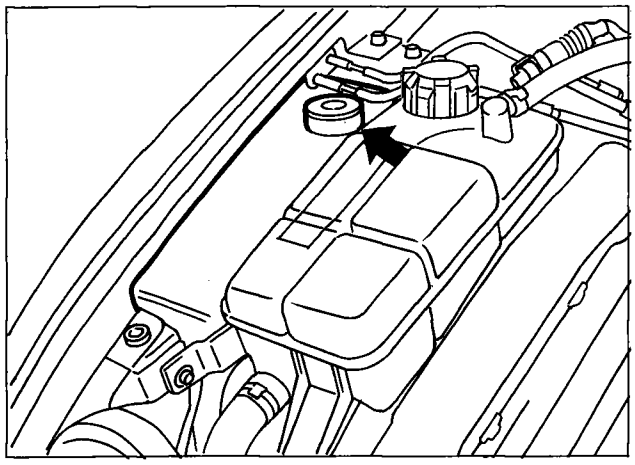

P4F19BA01

Marea 1370 12v

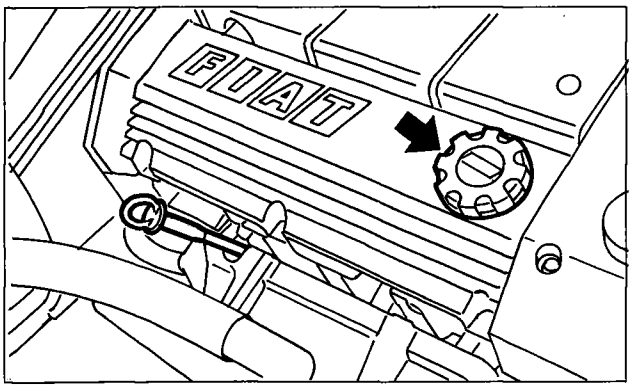

P4F19BA02

Marea 1581 16v

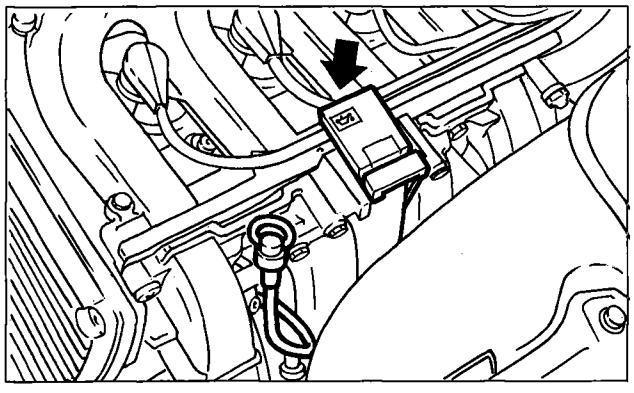

P4F19BA03

Marea 1747 16v

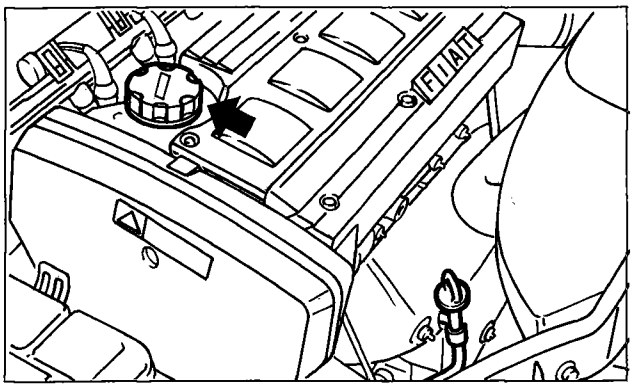

P4F19BA04

Windscreen/rearscreen and headlamps washer fluid level

In order to add fluid, lift up the cap, lift up the filter and pour a mixture of water and Arexons DPI fluid in the following percentages:

- 30% Arexons DP1 and 70% water in summer;
- 50% Arexons DP1 and 50% water in winter.

In the case of temperatures below -20 °C, use undiluted Arexons DP1.

Versions with headlamp washers are fitted with a dip stick, indicating the amount of fluid in the windscreen washer reservoir: 5 litres - 3 litres - 1 litre.

Engine oil level

The engine oil level is checked with the vehicle on a flat surface and the engine cold, or at least 10 minutes after the engine has been switched off.

The oil level should be between the MIN and MAX marks on the dip stick. The gap between the MIN and MAX levels corresonds to around 1 litre of oil.

If the level of the oil is too close to or actually below the MIN reference, add oil through the filler until the MAX reference is reached.

The level of the oil should never exceed the MAX reference because this could cause excessive evaporation of the actual oil and a loss in pressure.

When topping up with oil take great care to avoid accidentally spilling engine oil in the alternator ventilation slits which could cause serious damage to the alternator and also represents a fire hazard.

Do not add oil with different characteristics from the oil already in the engine. Only the use of semi-synthetic oil guarantees the maintenance plan intervals.

After having added oil, before checking the level, let the engine run for a few seconds and wait for several minutes after it has been switched off.

Copyright by Fiat Auto

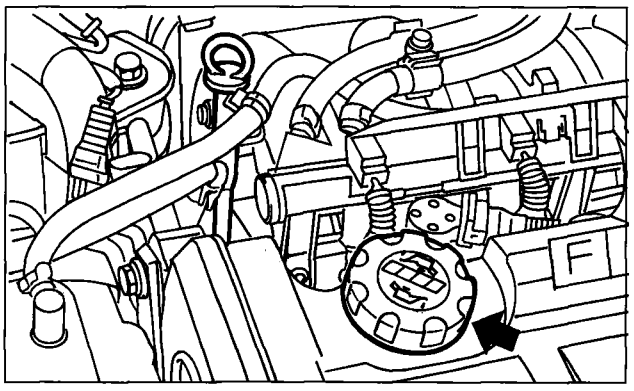

P4F20BA01

Marea 1998 20v

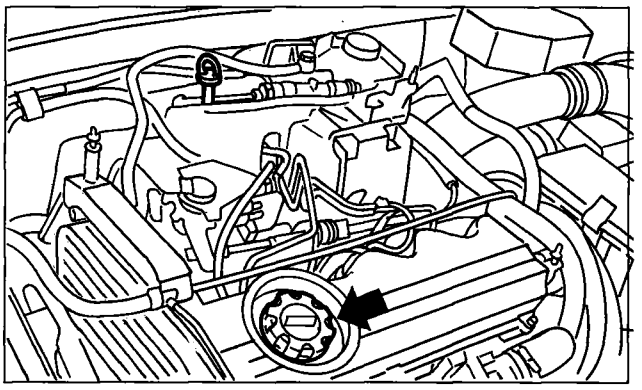

P4F20BA02

Marea 1910 TD

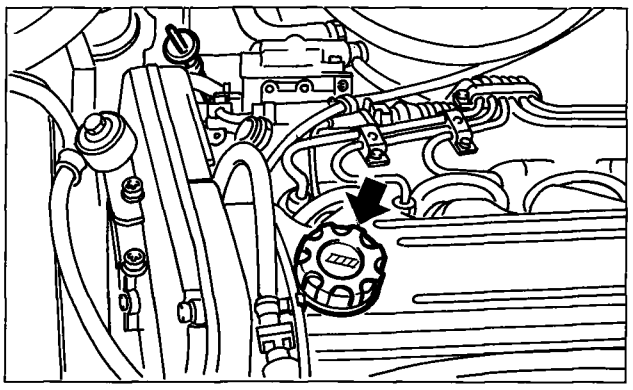

P4F20BA03

Marea 2387 TD

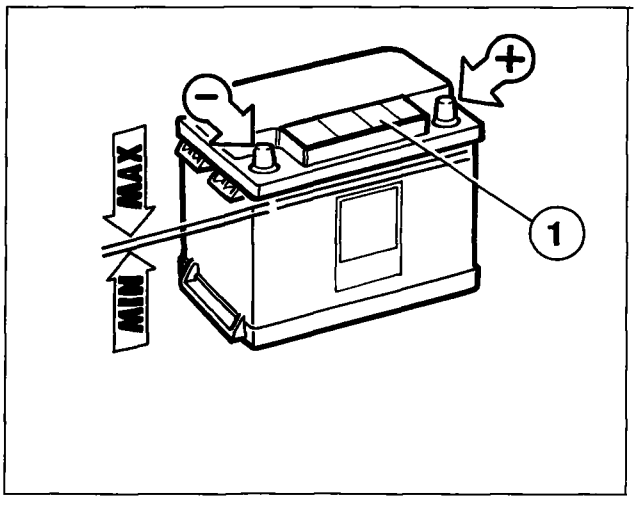

P4F20BA04

Battery fluid level

The battery is the "reduced maintenance" type: in normal usage conditions it does not require topping up with distilled water.

The level of the battery fluid (electrolyte), with the vehicle on a flat surface, should be between the references on the battery. If the level is below the MIN mark, lift up the protective cover (1) and top up using distilled water.

The fluid contained in the battery is poisonous and corrosive. Avoid contact with the skin and eyes. Keep naked flames and possible sources of sparks away from the battery as there is a danger of explosion and fire.

The state of charge of the battery should be checked, preferably at the beginning of the cold season, to avoid the possibility of the electrolyte freezing.
This check should be carried out more often if the vehicle is mainly used for short journies, or if it is fitted with consumers which permanently absorb power with the ignition switched off, above all if they have been fitted in the after market.

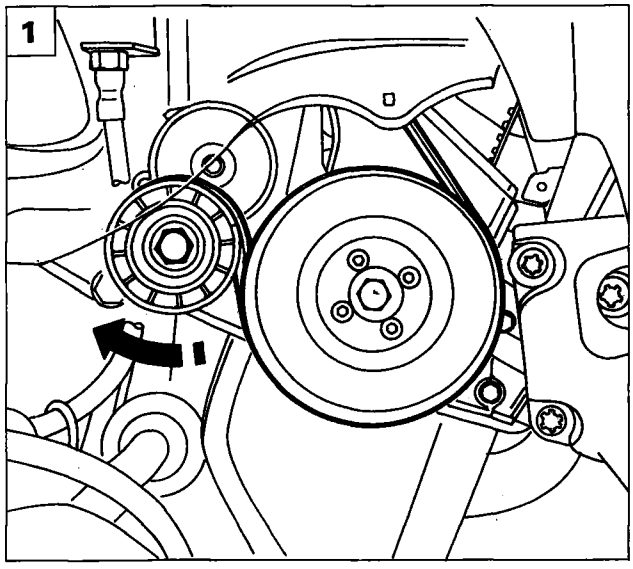

P4F21BA01

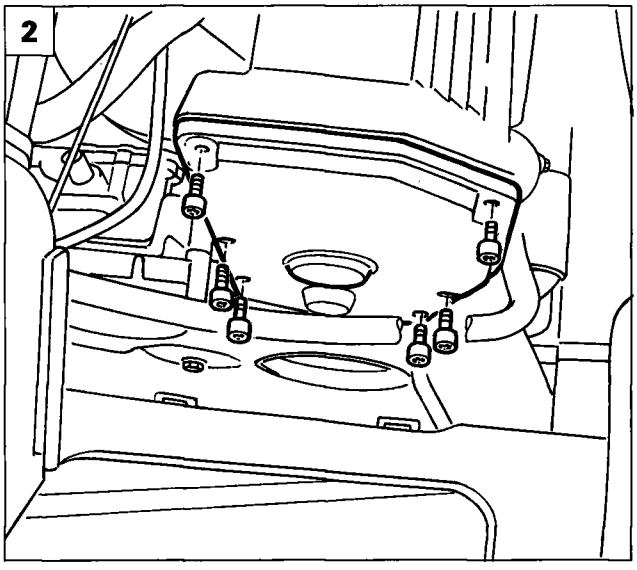

P4F21BA02

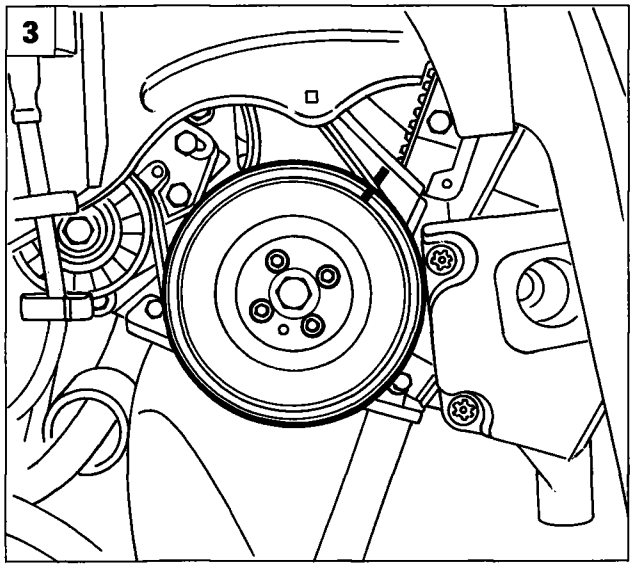

P4F21BA03

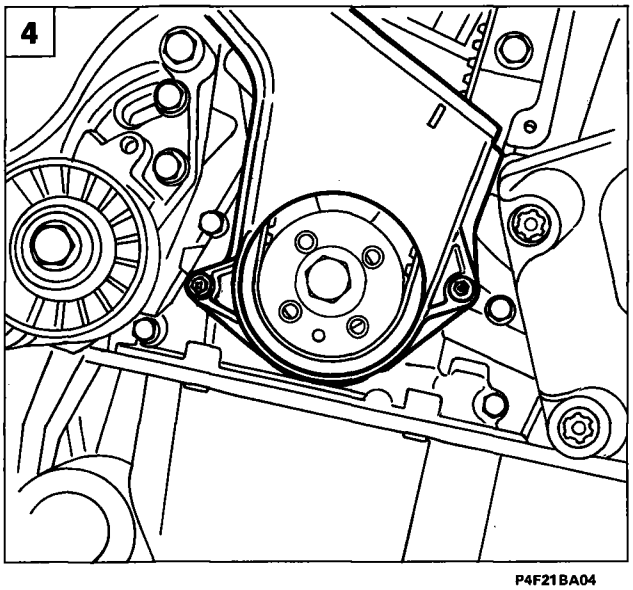

P4F21BA04

18 REPLACE TIMING DRIVE BELT

Marea 1370 12v

Position the vehicle on a lift, then:

- disconnect the negative battery lead;
- remove the right front wheel;
- remove the right wheel arch liner to gain access to the auxiliary shaft drive belt.

1. Loosen the tension of the auxiliary shaft drive belt acting on the centre automatic tensioning device nut to release the spring inside the device. Then remove the belt from the damper flywheel leaving it fitted on the power steering pump pulley; in this way the upper power steering pump shield does not have to be removed.

2. Remove the upper shield for the timing drive belt after having removed the coolant pipe support.

3. Loosen the bolts fixing the damper flywheel, then rotate the latter until the reference on it coincides with the reference on the shield underneath. Then remove the damper flywheel.

4. Remove the lower shield for the timing drive belt.

Copyright by Fiat Auto

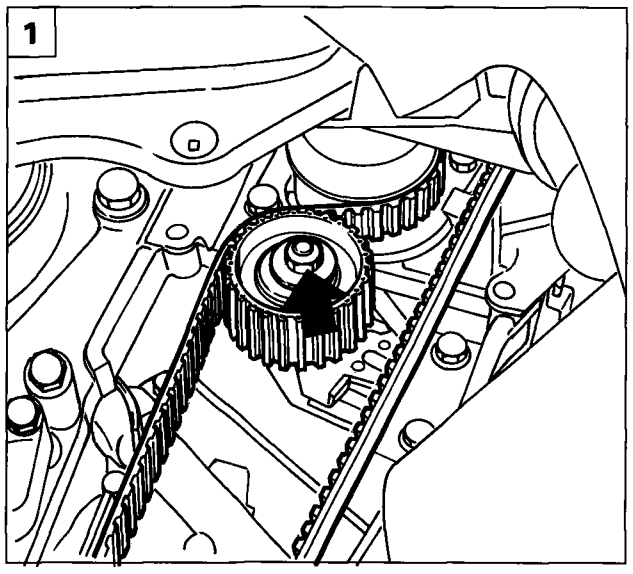

P4F22BA01

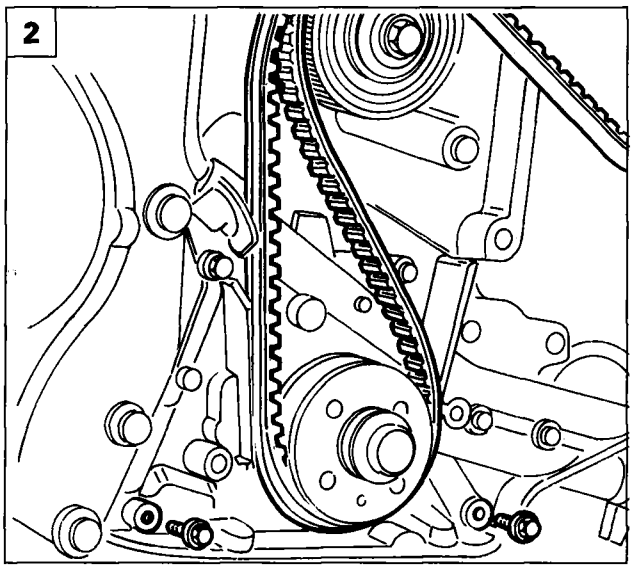

P4F22BA02

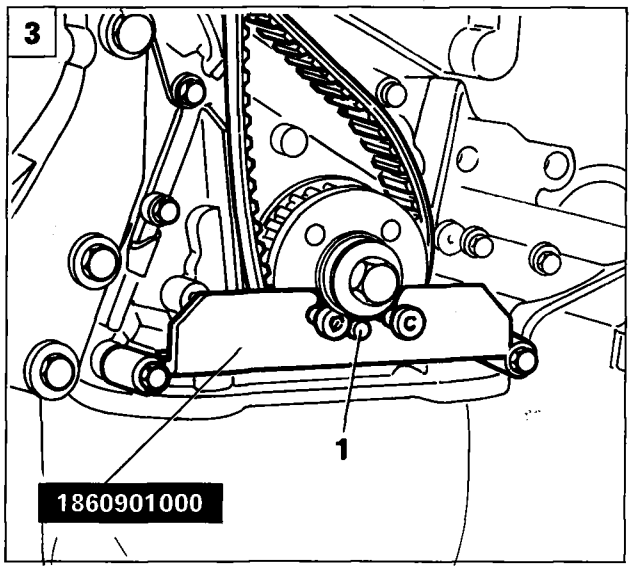

P4F22BA03

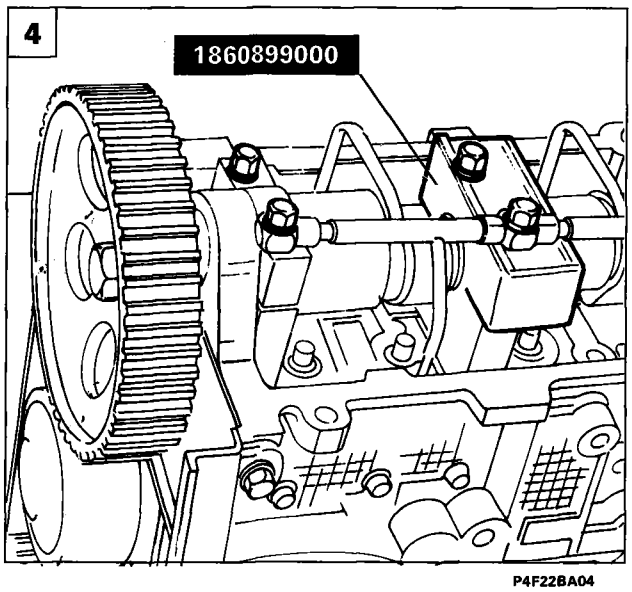

P4F22BA04

1. Loosen the automatic tensioner bolt, releasing the belt pressure, then remove it.

Fitting the timing drive belt

2. After having removed the tappet cover, loosen the bolt fixing the camshaft drive pulley using spanner 1860831000; fit the toothed belt on the crankshaft gear and remove the two bolts illustrated fixing the oil pump to the crankcase.
3. Place tool 1860901000 in position, ensuring that the opening (1) in the tool coincides with the dowel on the crankshaft gear; under these circumstances cylinder no. 1 is at T.D.C.
4. Remove the fixing bolts for the 1st - 2nd - 3rd and 4th exhaust side timing caps, loosen the inlet side one, lift up the lubrication duct, remove the 2nd cap and place tool 1860899000 for timing the camshaft in the housing, then tighten all the caps to a pre-torque of 1 daNm.

Take great care when lifting up the lubrication duct to avoid distorting or breaking the actual duct.

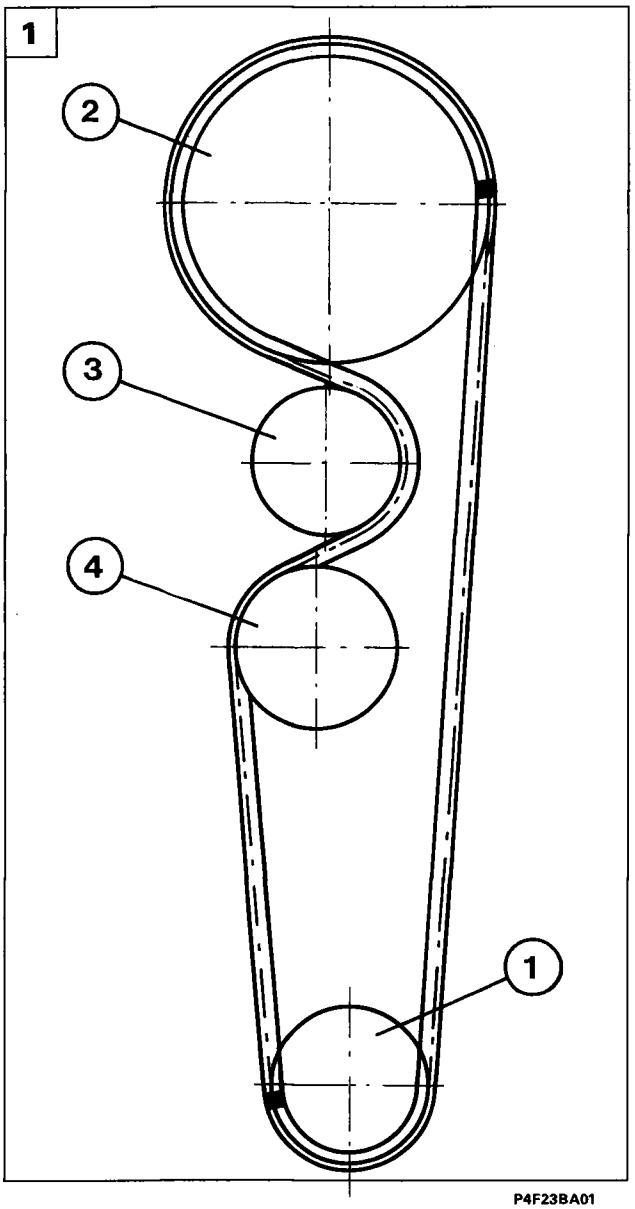

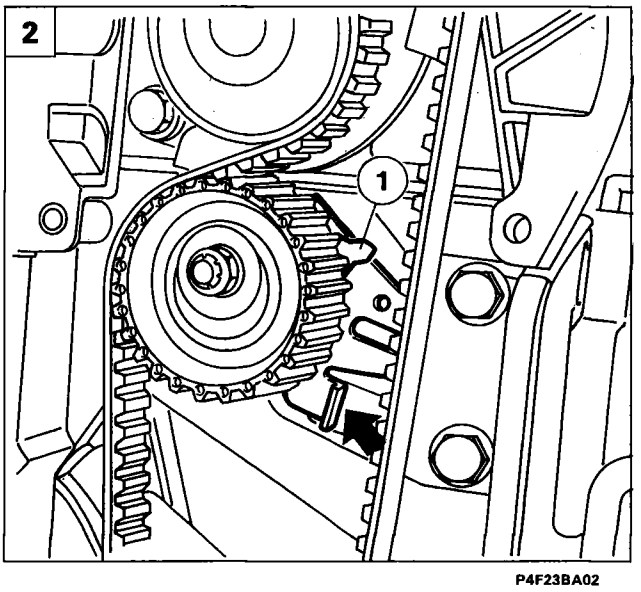

1. Complete the refitting of the timing drive belt observing the following order:

   1 crankshaft drive pinion (1);
   2 camshaft drive pulley (2);
   3 water pump pulley (3);
   4 automatic tensioner (4).

NOTE *The belt should be fitted avoiding bending it at acute angles in order not to adversely affect the structure of the actual belt.*
The belt should also be fitted with the arrows on it pointing in the direction of rotation of the engine.

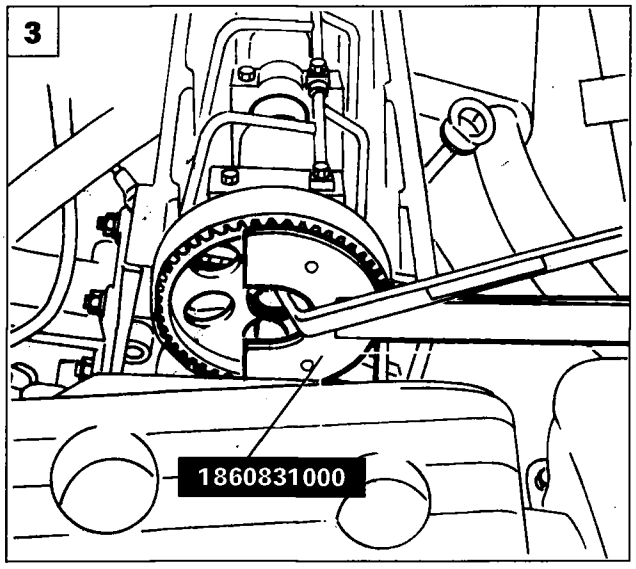

Tensioning the timing drive belt

2. Using tool 1860443000, act at the point shown by the arrow and position the moving reference (1) on the tensioner in the maximum tension position, then lock the tensioner fixing nut.

3. Tighten the bolt fixing the camshaft drive pulley to the camshaft to a torque of 11.3 daNm using spanner 1860831000.

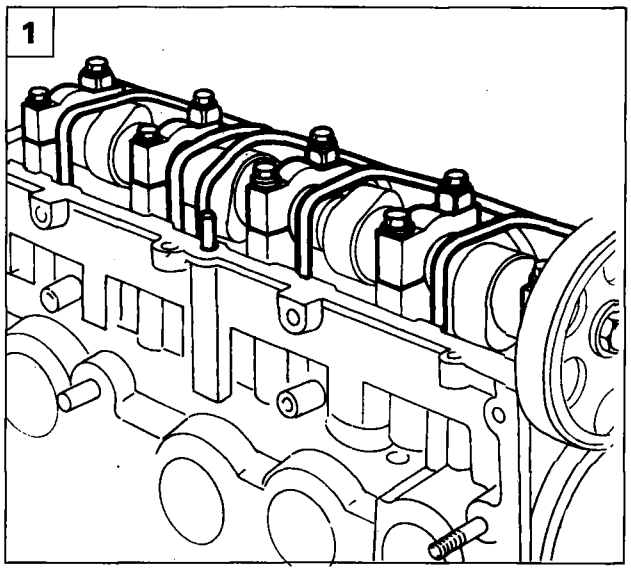

P4F24BA01

1. Remove tool 1860899000 and refit the 2nd cap.
   In order to carry out this operation it is necessary to remove the bolts fixing the 1st 2nd - 3rd - 4th exhaust side caps, loosen the inlet side caps, slightly raise the lubrication duct, remove the tool and place the cap in position, tightening all the cap fixing bolts to the recommended torque.

Take great care when lifting up the lubrication duct to avoid distorting or breaking the actual duct.

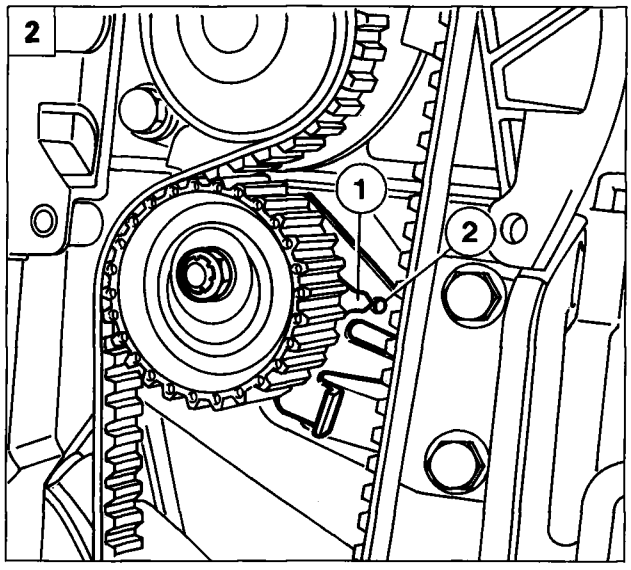

P4F24BA02

2. Remove tool 1860901000 positioned previously on the timing gear, rotating the crankshaft through two revolutions in its direction of rotation. Loosen the nut fixing the tensioner, ensure that the moving reference (1) coincides with the fixed reference (2), then lock the tensioner fixing nut and tighten it to the recommended torque.

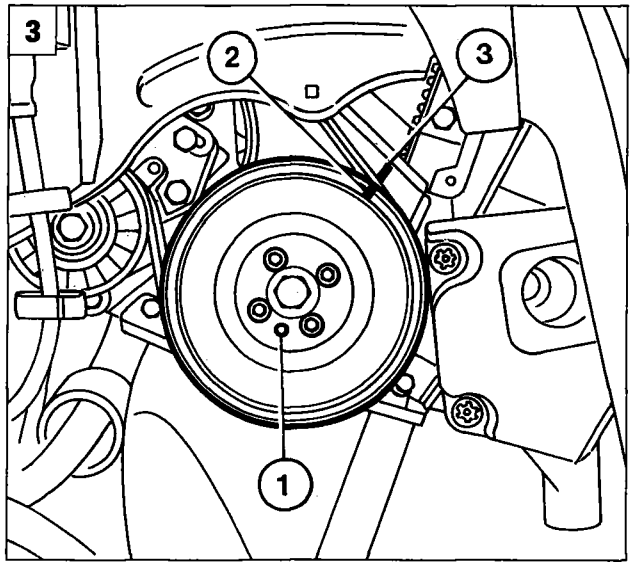

P4F24BA03

3. Refit the components previously removed, taking care to refit the auxiliary shaft drive pulley with the opening in the pulley itself inserted in the dowel (1) on the crankshaft pinion and also checking the engine timing by checking that the reference (2) on the pulley corresponds with the reference (3) on the timing belt shield.

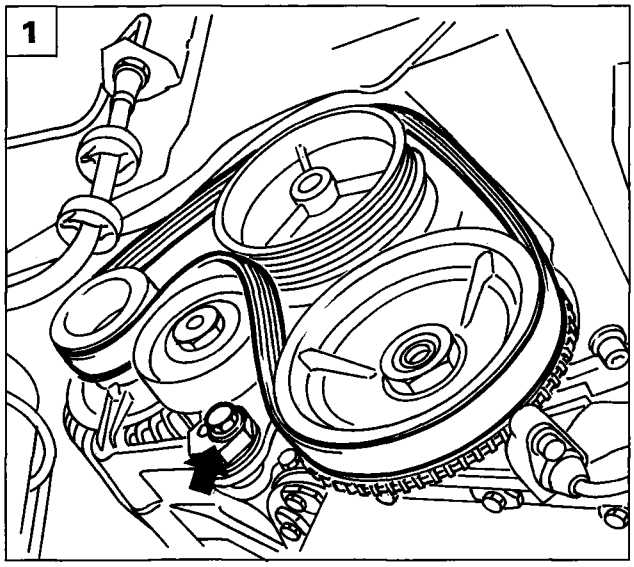

P4F25BA01

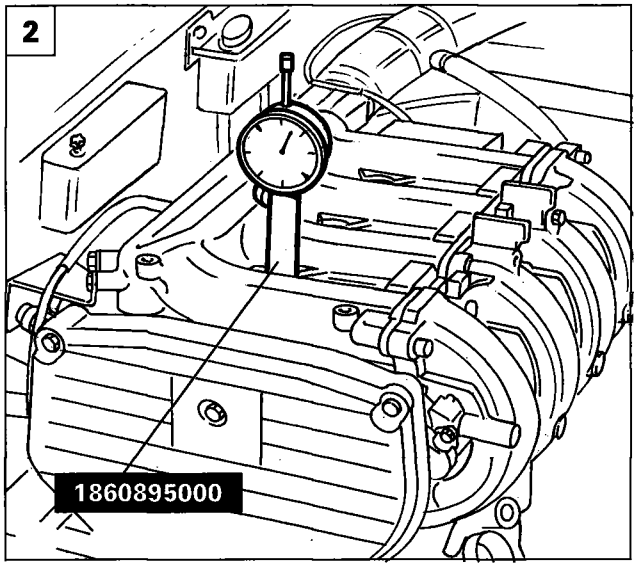

P4F25BA02

P4F25BA03

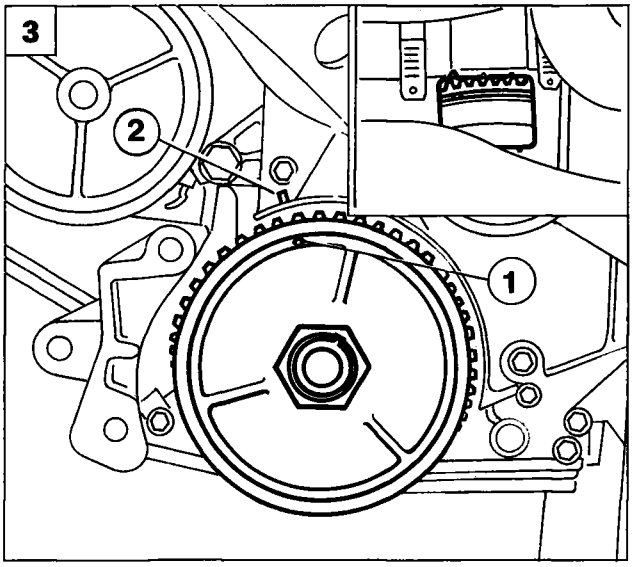

P4F25BA04

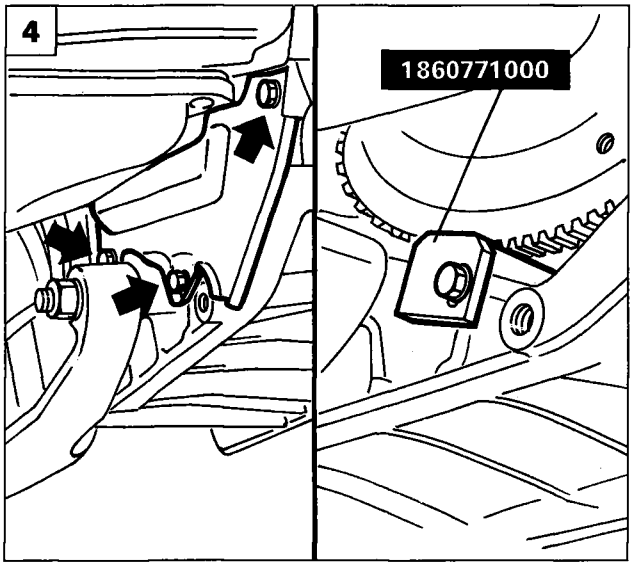

P4F25BA06

Marea 1581 16v

Position the vehicle on a lift, then:

- disconnect the negative battery lead;
- remove the right front wheel;
- remove the right wheel arch liner.

1. To gain access to the timing drive belt it is necessary to remove the alternator drive belt from the damper flywheel. In order to do this, act on the tensioner fixing bolt shown in the diagram.
2. After having removed the air intake pipe near the upper part of the timing belt shield, remove the spark plugs and position the dial gauge by cylinder n° 1, using support 1860895000; rotate the crankshaft until T.D.C. is identified.
3. Check that the reference (1) on the damper flywheel is in line with the reference (2) on the lower timing belt shield. Also check that the reference on the flywheel coincides with the reference on the bell housing, as shown in the inset.
4. Remove the lower protective cover for the flywheel from the bell housing, then position the flywheel lock 1860771000 and remove the damper flywheel. Then undo the upper and lower bolts fixing the timing belt shield and remove it.

Copyright by Fiat Auto

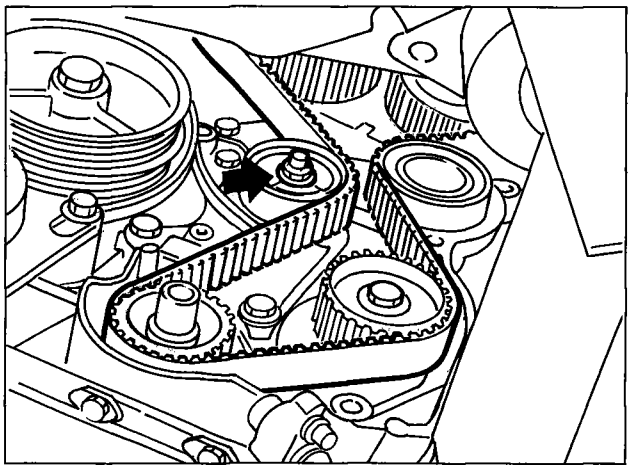

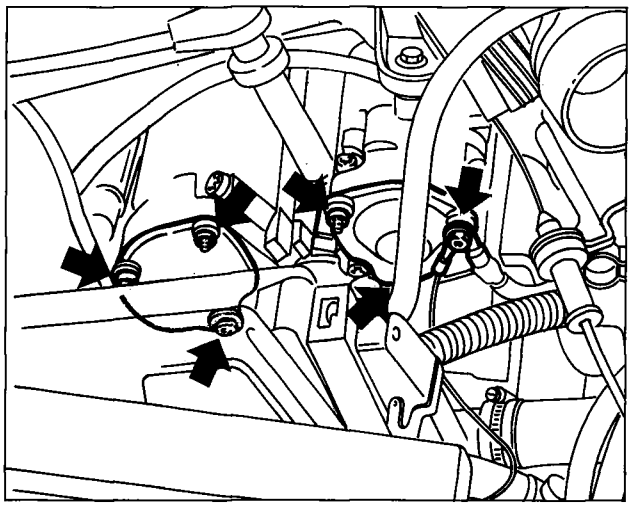

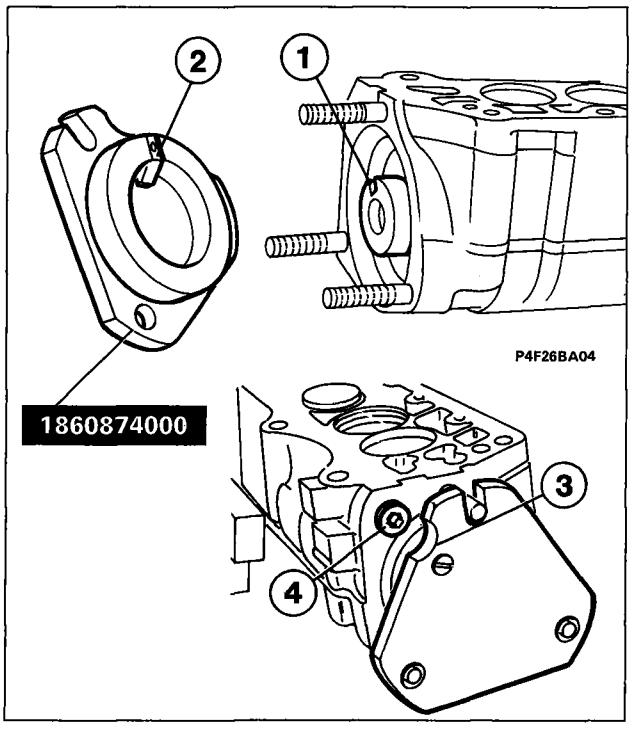

P4F26BA05

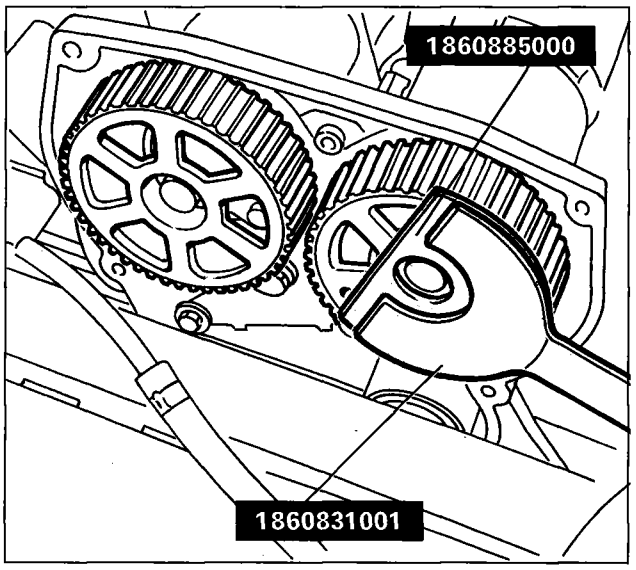

P4F26BA02

1. Loosen the nut fixing the automatic belt tensioner in order to release the belt tension, then remove the actual belt.

Timing at "0"

2. Loosen the bolts fixing the camshaft pullies using tool 1860885000 fitted on support 1860831001.

3. Remove the ignition coils acting on the mounting bracket fixing nuts, after having disconnected the supply connectors. Then remove the rear covers for the camshafts, as shown in the diagram.

4. Position tools 1860874000 for timing the camshafts ensuring that the housing (1) for the shaft coincides with the element (2) on the tools; make sure that the element engages with the housing and fix the tool to the camshaft housing by the covers removed previously. Repeat the operation both for the inlet side camshaft and the exhaust side camshaft.

If the tools do not fit perfectly and it is necessary to rotate the camshafts, align the pistons so that none of them are at T.D.C. thereby avoiding problems with the valves.

Tools 1860874000 for timing the shafts only differ from one another throught the reference housing (3) in the angle at the bottom which should correspond with the plug (4) in the camshaft housing.

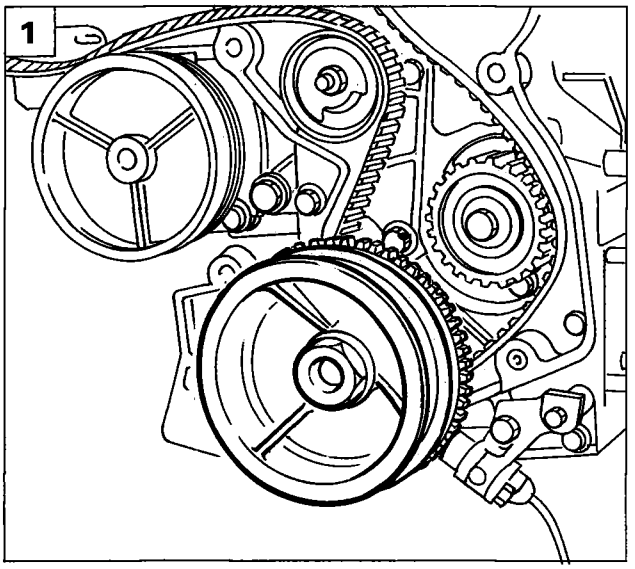

P4F27BA01

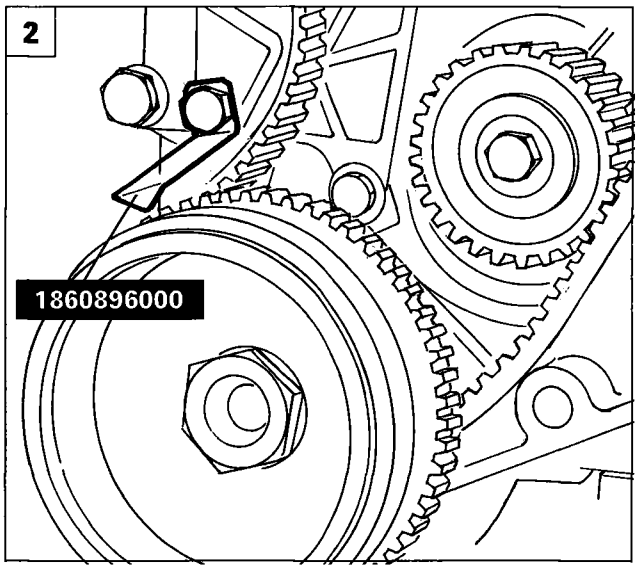

P4F27BA02

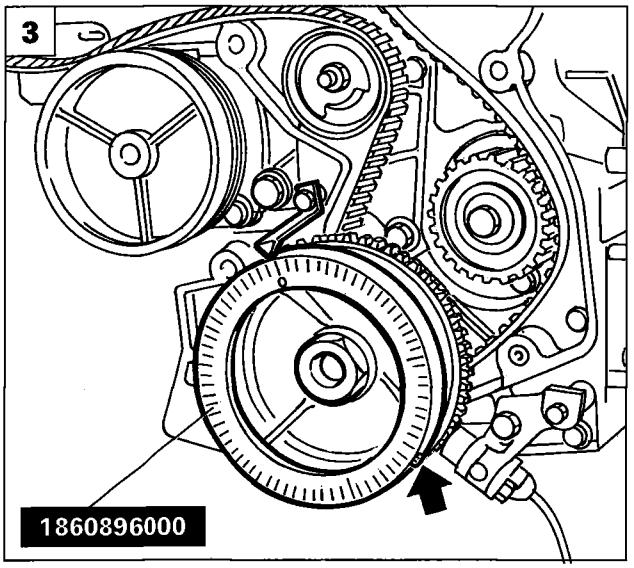

P4F27BA03

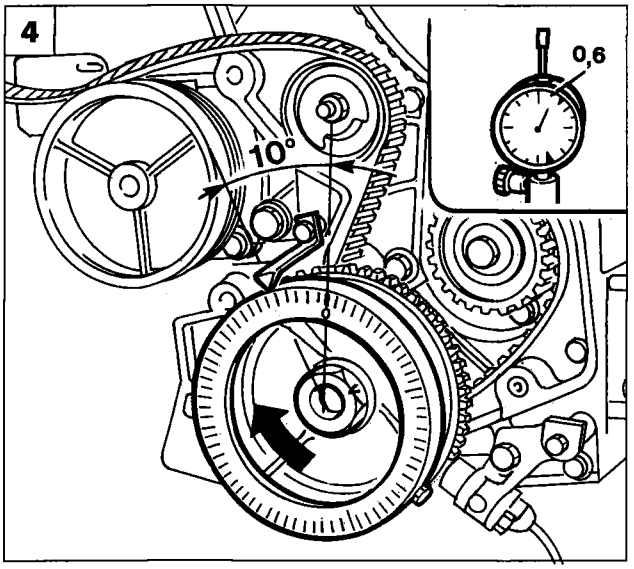

P4F27BA04

1. Only fit the timing drive belt on the crankshaft. With flywheel lock 1860771000 fitted, fit the damper flywheel and tighten the fixing nut to a torque of 22 daNm, then remove the flywheel lock.

2. Remove the auxiliary shaft belt tensioning device, acting on the fixings to allow the tool for timing at "0" to be fitted. Re-check that cylinder no. 1 is at T.D.C., using the dial gauge, then using the timing belt shield fixing bolt, fix the fixed reference shown in the diagram in the bolt housing.

3. Fit the support base for the graduated disc 1860896000 on the auxiliary shaft drive pulley and fix it to the actual pulley using a bolt. Then fit the graduated disc to the support base ensuring that the "0" on the disc coincides with the fixed reference positioned previously.

4. Rotate the crankshaft in its normal direction of rotation through 10°,using a special spanner on the damper flywheel fixing nut; measure the axial movement of the piston on the dial gauge (for example 0.6 mm).

Copyright by Fiat Auto

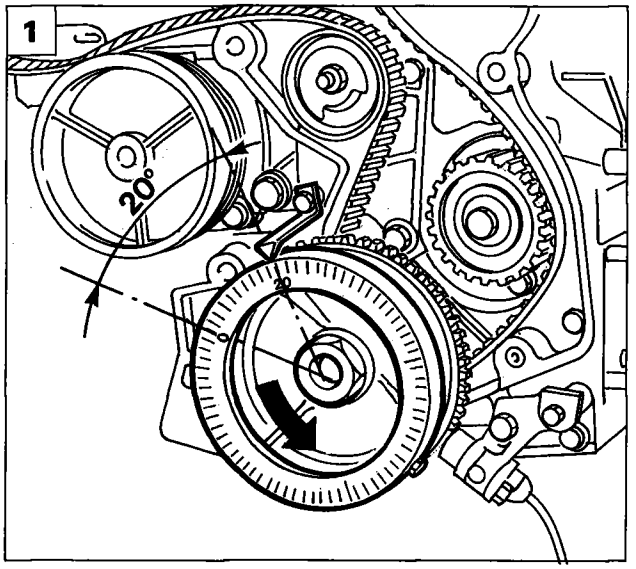

P4F28BA01

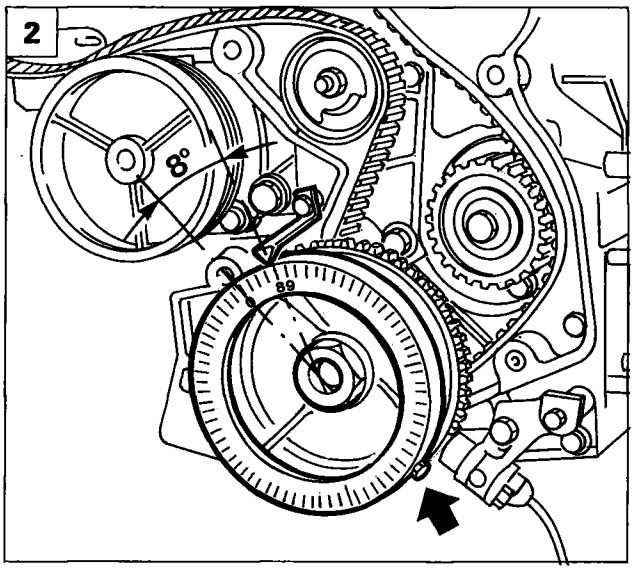

P4F28BA02

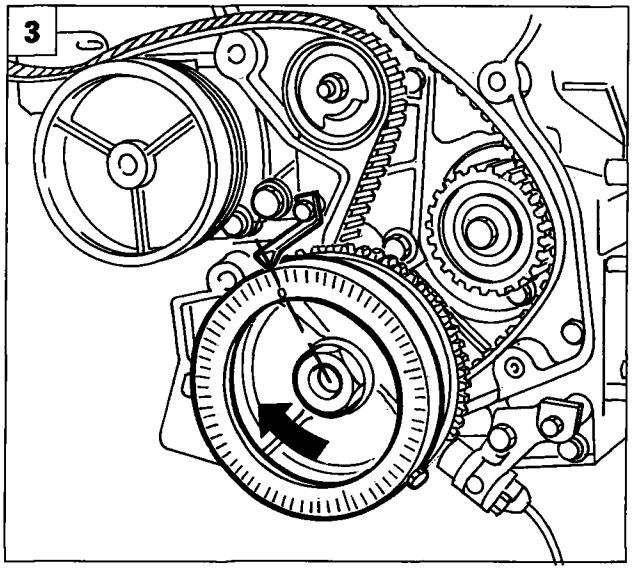

P4F28BA03

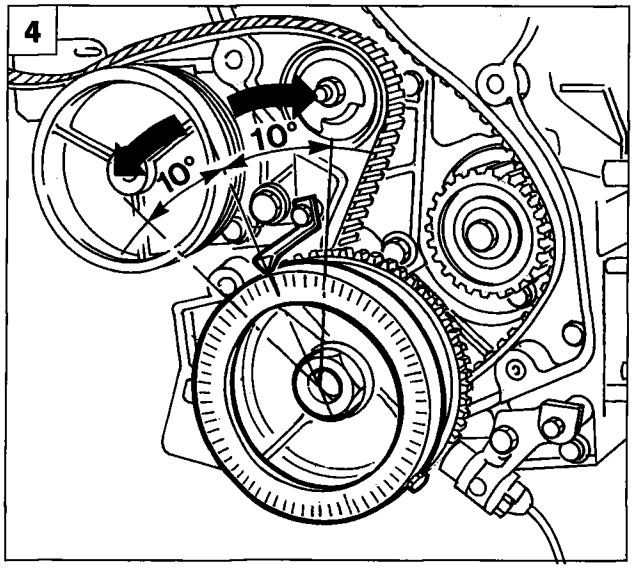

P4F28BA04

1. Rotate the crankshaft in the opposite direction to its normal direction of rotation through around 20° in relation to the fixed reference. Rotate the crankshaft again in its normal direction of rotation until the same axial movement measured previously (0.6 mm) appears on the dial gauge.
2. Read the angular value on the graduated disc corresponding to the previous axial movement (for example 8°). Calculate the arithmetical average of the angular value of the crankshaft set at the beginning of the procedure (10°) and the current value (8°), then release the graduated disc from the base, position it in relation to the fixed reference, without rotating the crankshaft, at the value obtained from the arithmetical average (for example 9° = the average of 10° and 8°), then lock the graduated disc again.
3. Rotate the crankshaft pulley in a clockwise direction until the "0'" on the graduated disc coincides with the fixed reference.
4. Rotate the crankshaft 10° in a clockwise direction and an anti-clockwise direction checking on the dial gauge that the value for the clockwise rotation of the crankshaft is the same as the one for the anti-clockwise rotation.

If the readings on the dial gauge after the check for point 4 are not the same, repeat the procedure described on the previous pages.

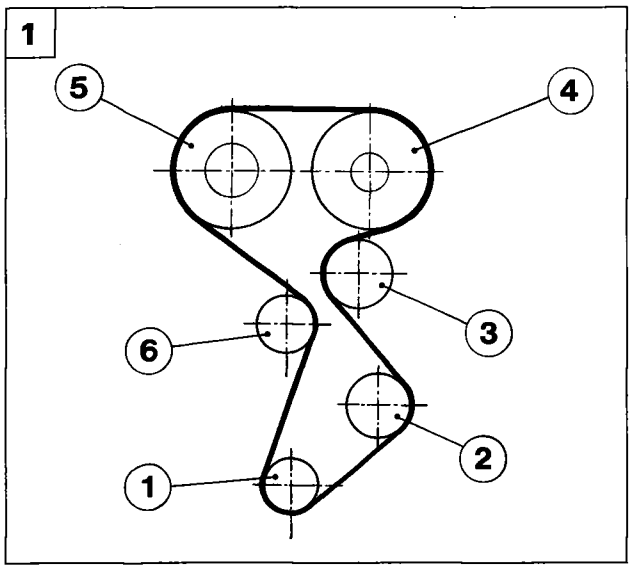

P4F29BA01

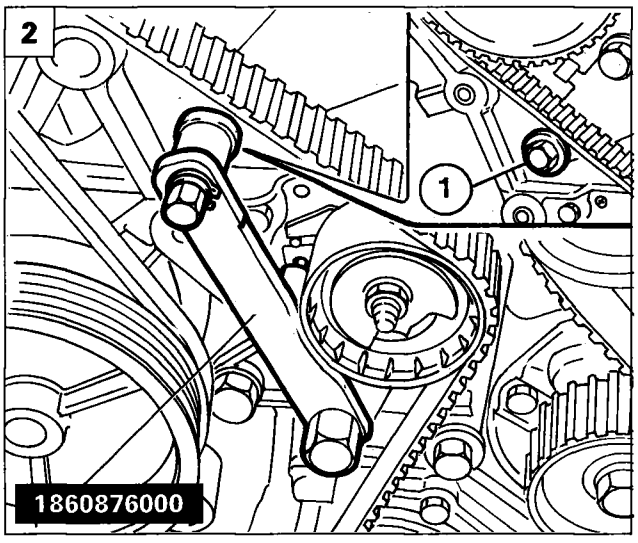

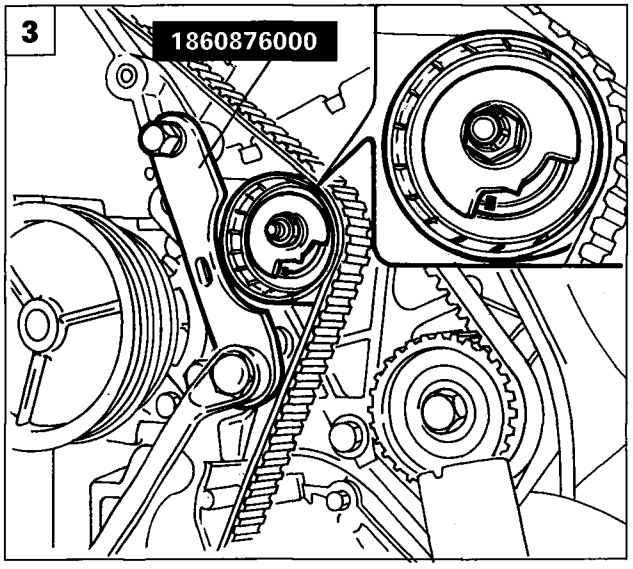

P4F29BA03

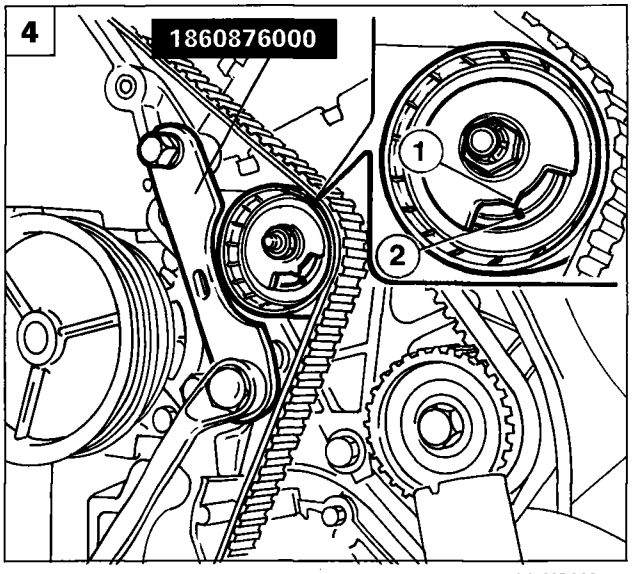

P4F29BA04

Tensioning the timing belt

1. Complete the fitting of the timing belt observing the following order: 1. Crankshaft gear (already fitted) - 2. Oil pump gear - 3. Fixed pulley - 4. Timing pulley, inlet side - 5. Timing pulley, exhaust side - 6. Automatic tensioner.

Fit the belt with the camshaft pullies rotated towards the right in order to recover the necessary clearance so that the belt fits perfectly on the actual pullies, ensuring the correct tension for the section of belt already fitted.

2. Remove the bolt (1) to allow the positioning of tool 1860876000 for tensioning the timing belt.
3. Acting on tool 1860876000, place the belt tensioner in the maximum tension position, then lock the tensioner nut. Remove the dial gauge and tighten the camshaft pullies to a torque of 11.5 daNm using tool 1860885000 on support 1860831001.
4. Remove tools 1860874000; rotate the crankshaft through two revolutions in its direction of rotation, loosen the nut locking the tensioner and, working with a special spanner on the belt tensioner, position reference (1) in line with reference (2), then tighten the belt tensioner lock nut to a torque of 2.3 daNm.
   As a further check, refit the dial gauge, determine T.D.C. and check that tools 1860874000 fit on the camshafts, then refit the components removed previously.

Copyright by Fiat Auto

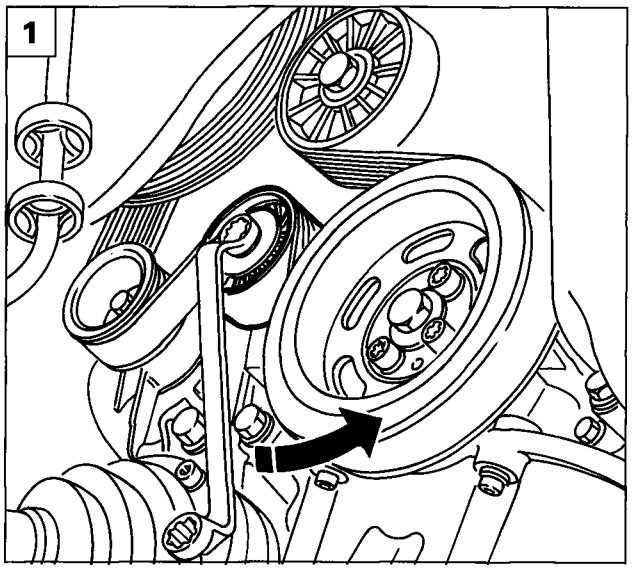

P4F30BA01

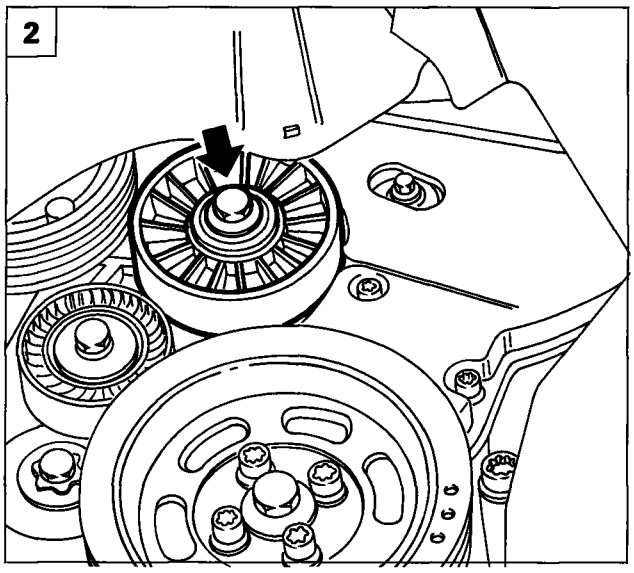

P4F30BA02

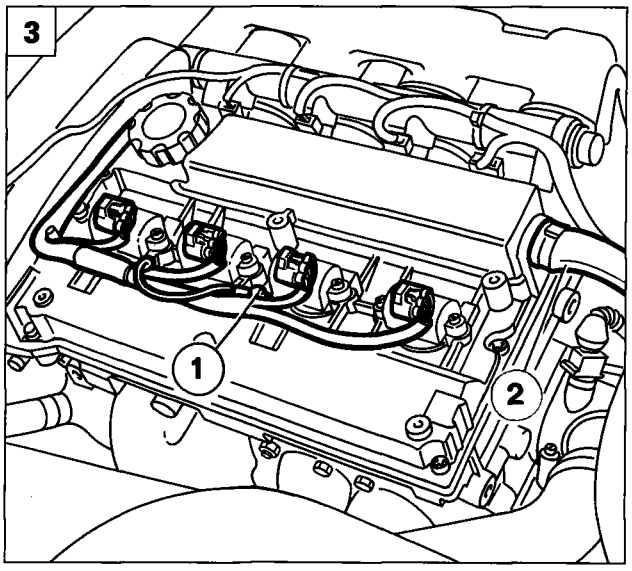

P4F30BA03

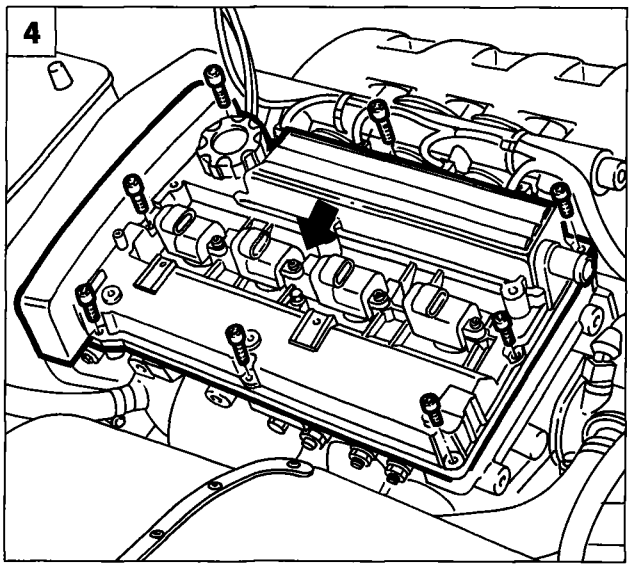

P4F30BA04

Marea 1747 16v

Position the vehicle on a lift, then:

- disconnect the negative battery lead;
- remove the right front wheel;
- remove the right wheel arch liner.

1. Loosen the tension for theauxiliary shaft drive belt acting in an anti-clockwise direction on the automatic tensioning device to release the spring inside the actual device; then remove the belt.
2. Remove the fixed pulley for the auxiliary shaft drive belt, then undo the upper and lower bolts fixing the timing belt shield and remove it.
3. Remove the cover for the ignition coils, disconnect the connections from the coils, the earth cable (1) and the oil vapour recovery pipe (2) from the cylinder head cover.
4. Disconnect the connection from the air conditioning compressor, release the cable and remove the cylinder head cover acting on the fixing bolts shown in the diagram.

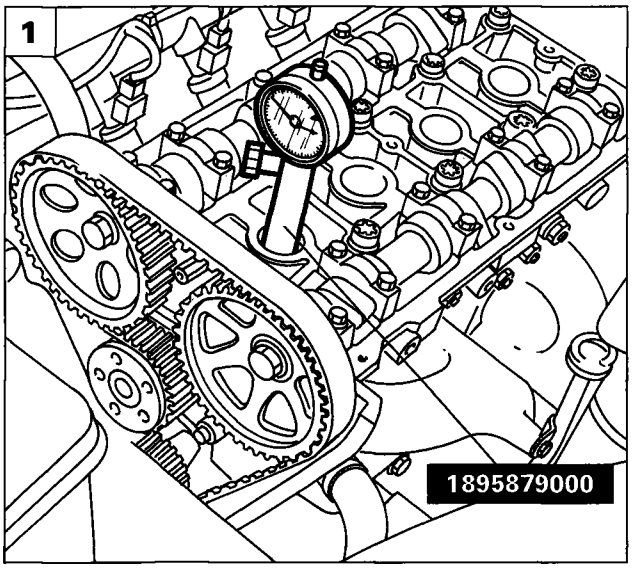

P4F31BA01

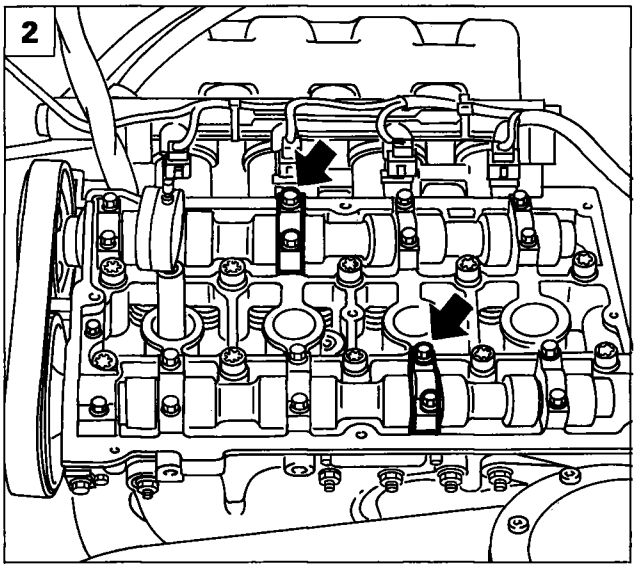

P4F31BA02

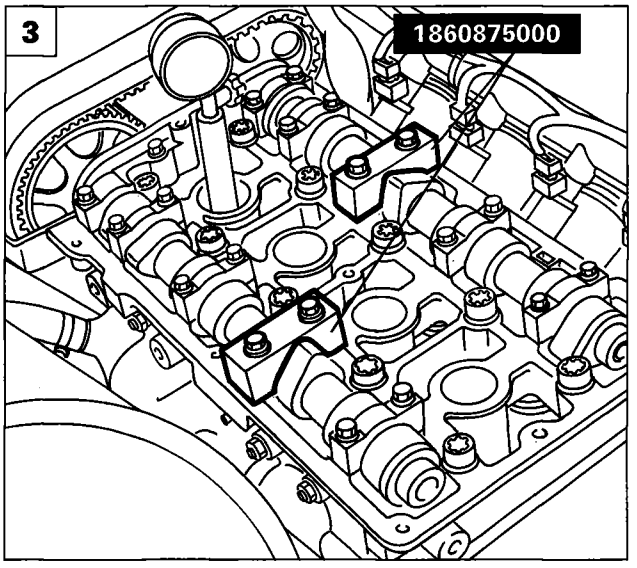

P4F31BA03

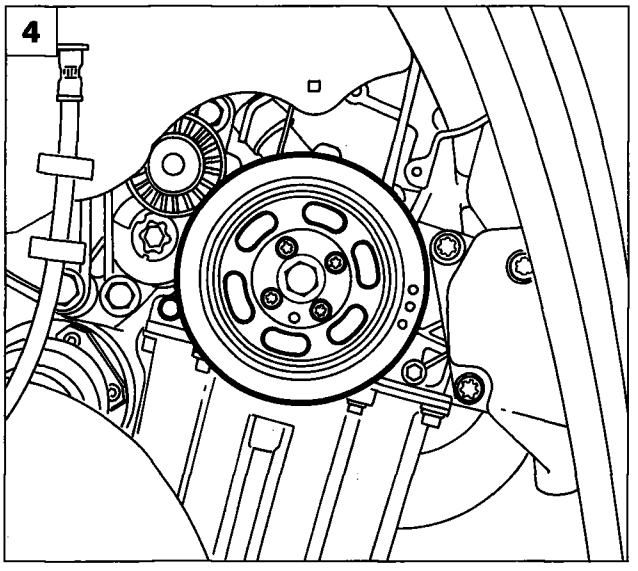

P4F31BA04

1. Remove the spark plugs using a spanner spanner. Position the dial gauge by cylinder n° 1 using support 1895879000, rotate the crankshaft until T.D.C. is determined.

2. Remove the 2nd inlet side camshaft fixing cap and the 3rd exhaust side camshaft fixing cap, as shown in the diagram.

When the camshaft caps are removed they must be marked so that they can be refitted in the correct position. If this is not the case, problems could arise with the reliability of the camshafts.

3. Position and fix the pair of tools 1860875000 by the caps removed previously.

The pair of tools 1860875000 should exactly follow the profile of the camshaft cams.

4. Remove the gearbox lower protective shield and position flywheel lock 1860898000. Then remove the damper flywheel (auxiliary shaft drive pulley).

Copyright by Fiat Auto

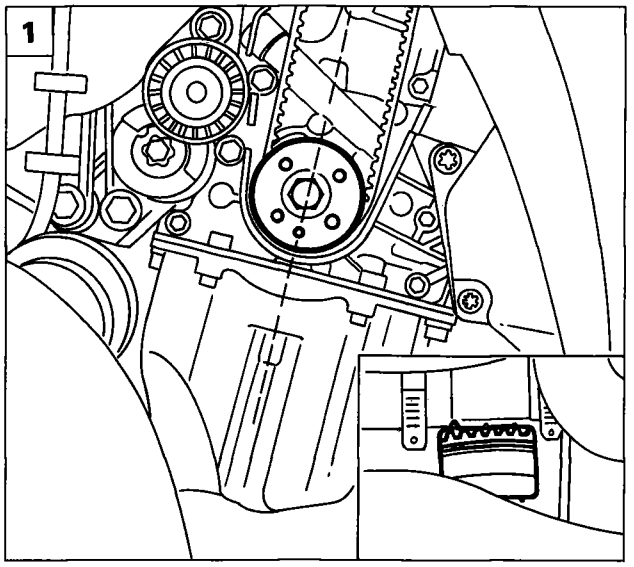

P4F32BA01

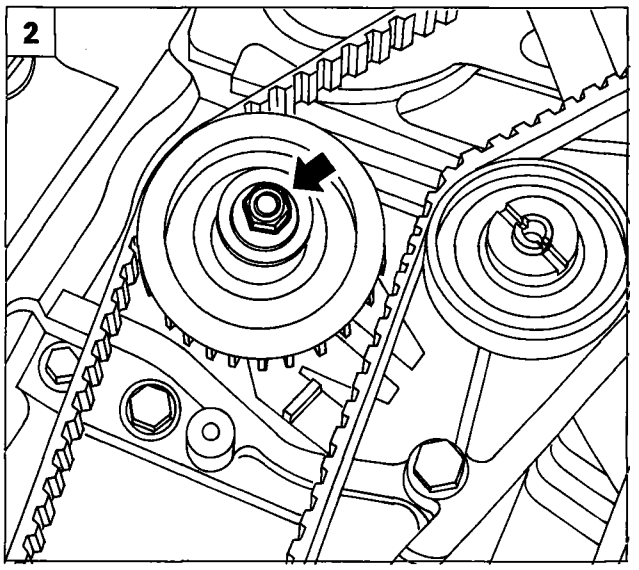

P4F32BA02

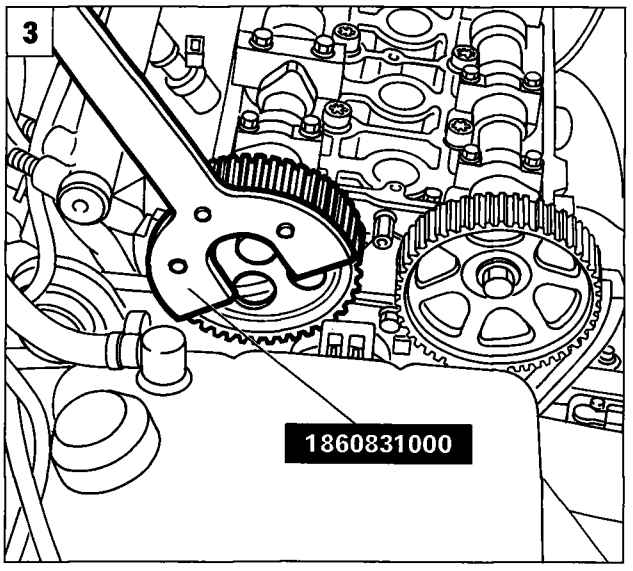

P4F32BA03

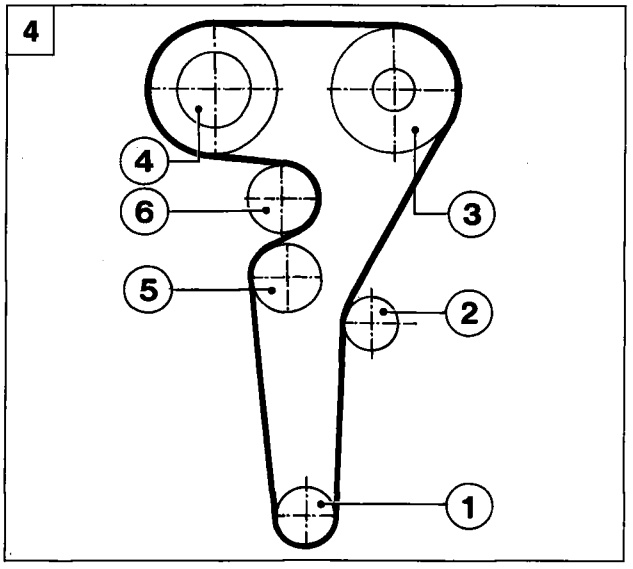

P4F32BA04

1. Check that the centering dowel on the timing drive gear is in line with the engine. Also remove the inspection cover on the bell housing and check that the reference on the flywheel coincides with the reference on the bell housing itself.

2. Loosen the tension for the timing belt acting on the nut shown in the diagram, then release the actual belt.

Fitting the timing belt

3. To facilitate the positioning of the timing belt, loosen the inlet side camshaft pulley and exhaust side camshaft pulley fixing bolt using tool 1860831000. These pullies have slots, allowing the correct matching of the belt/pulley.

4. Fit the belt observing the following order: 1. Crankshaft drive pinion - 2. Fixed pulley - 3. Camshaft pulley, exhaust side - 4. Camshaft pulley, inlet side - 5. Automatic tensioner pulley - 6. Water pump pulley.

NOTE *The belt should be fitted avoiding bending it at acute angles in order not to adversely affect the structure of the actual belt.*

Fit the belt so that the arrow is pointing in the direction of rotation of the engine. The belt has three references used in production for fitting.

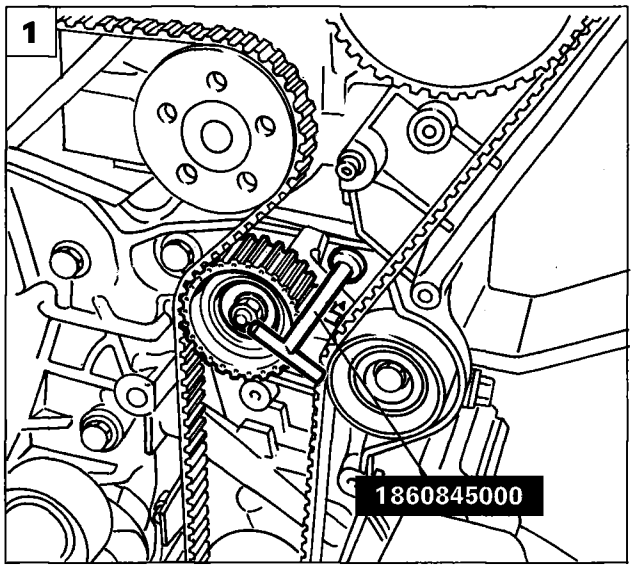

P4F33BA01

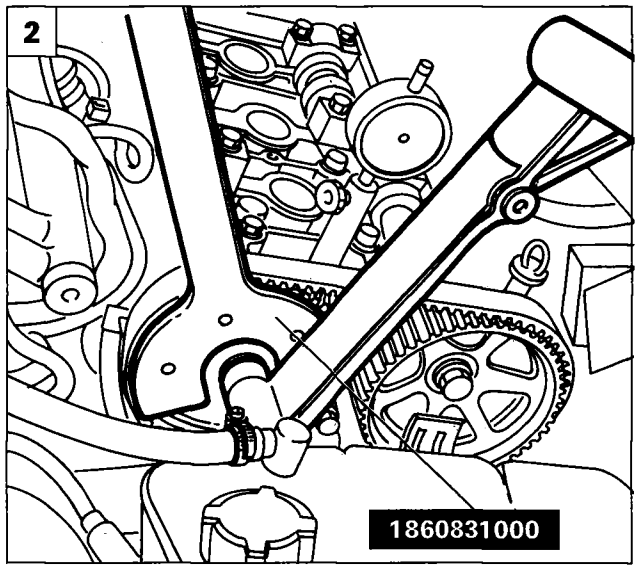

P4F33BA02

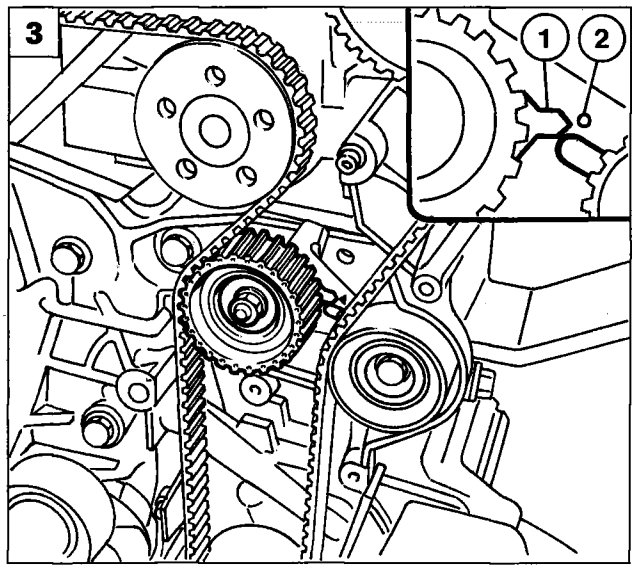

P4F33BA03

Tensioning the timing belt

1. Introduce tool 1860845000 in the opening in the automatic tensioner support; rotate the tool so that force is exerted on the automatic tensioner until it is in the maximum tensioner position, then tighten the nut fixing the tensioner to the support.
2. Tighten the inlet side and exhaust side camshaft pullies to a torque of 11.8 daNm using tool 1860831000.
3. Remove the pair of tools 1860875000 and replace the camshaft caps (marked during the removal) in the correct position and tighten them to a torque of 1.5 daNm. Remove the flywheel lock 1860898000, then rotate the crankshaft through two revolutions in its direction of rotation.

Loosen the nut fixing the belt tensioner and, using tool 1860845000, make sure that the moving reference (1) for the belt tensioner coincides with the fixed reference (2) on the crankcase. Tighten the nut fixing the belt tensioner to a torque of 2.5 daNm and then proceed with refitting the components removed previously.

Copyright by Fiat Auto

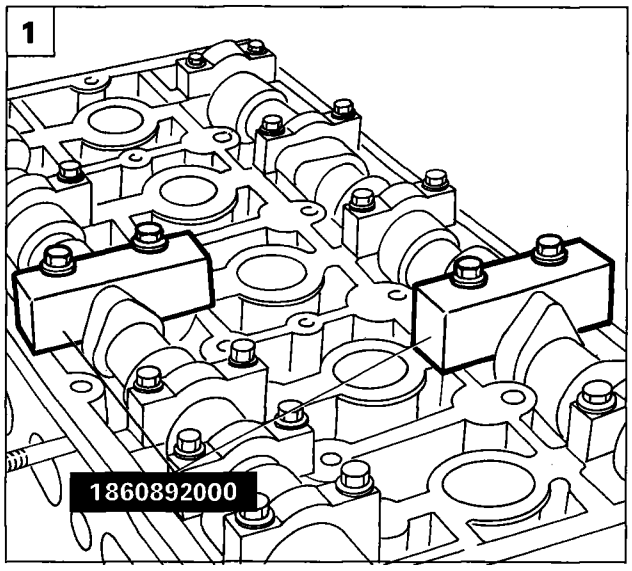

P4F34BA01

Marea 1998 20v

The timing drive belt cannot be removed-refitted on the vehicle because there is insufficient space between the timing belt cover and the bodyshell to carry out the operation. The belt must be replaced with the engine at the bench; refer to the engine overhaul manual for this version for a more detailed description of the procedure.

1. The timing of the camshafts takes place by positioning tools 1860892000 in place of the 2nd cap for the exhaust side cylinder and the 3rd cap for the inlet side cylinder.

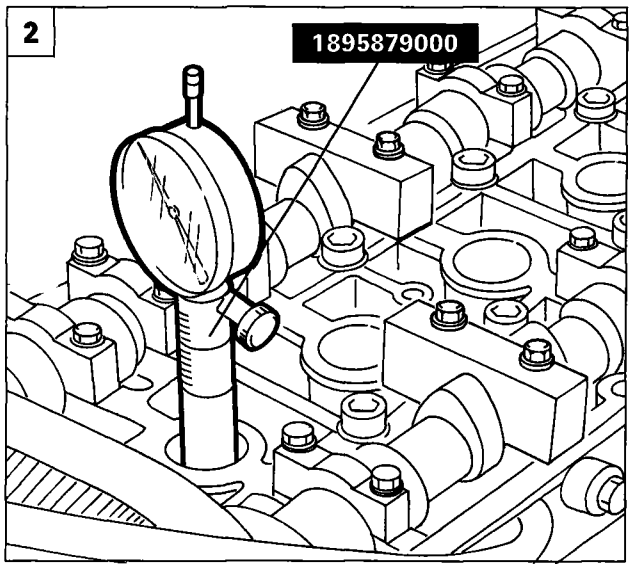

P4F34BA02

NOTE *The letters "A" and "S" on tools 1860892000 indicate "Aspirazione and Scarico" (Inlet and Exhaust). Make sure, when fitting, that the profileon the tools is perfectly in line with the profile of the camshaft cams.*

2. To determine T.D.C. for cylinder n° 1, position a dial gauge supported by tool 1895879000 tightened in place of the spark plug for the first cylinder. Rotate the crankshaft until T.D.C. is reached, as shown on the dial gauge. In this condition the reference on the crankshaft gear should coincide with the reference on the oil pump cover.

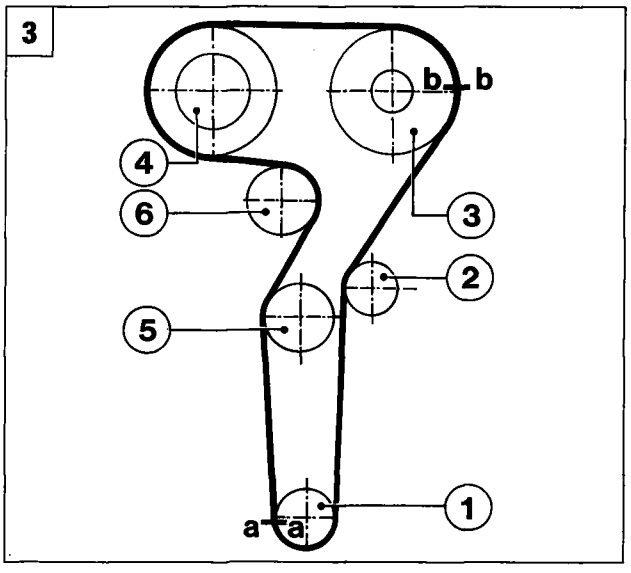

P4F34BA03

3. With the camshaft pullies slack, fit the belt observing the following order: 1. Crankshaft gear - 2. Fixed pulley - 3. - Camshaft pulley, exhaust side - 4. - Camshaft pulley, inlet side - 5. Automatic tensioner - 6. Water pump.

There is an arrow on the belt which indicates the direction of rotation of the engine. There are also references used in production for fitting.

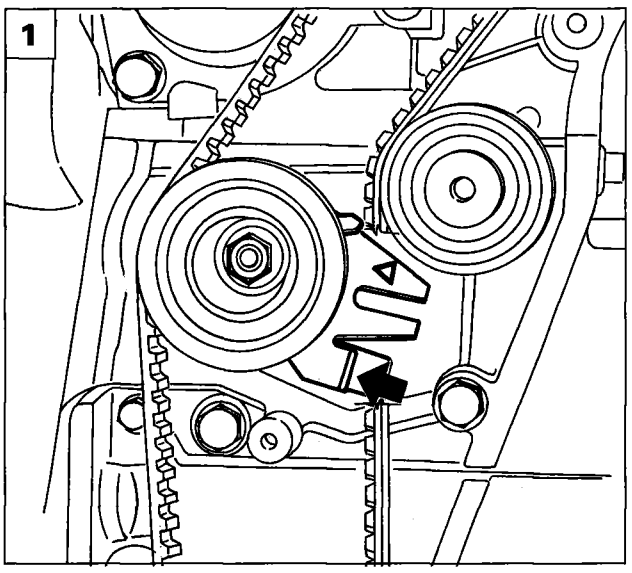

P4F35BA01

1. Using a screwdriver, apply force to the automatic tensioner tab so that the tensioner is placed in the maximum tension position, then tighten the nut fixing the tensioner to the support.

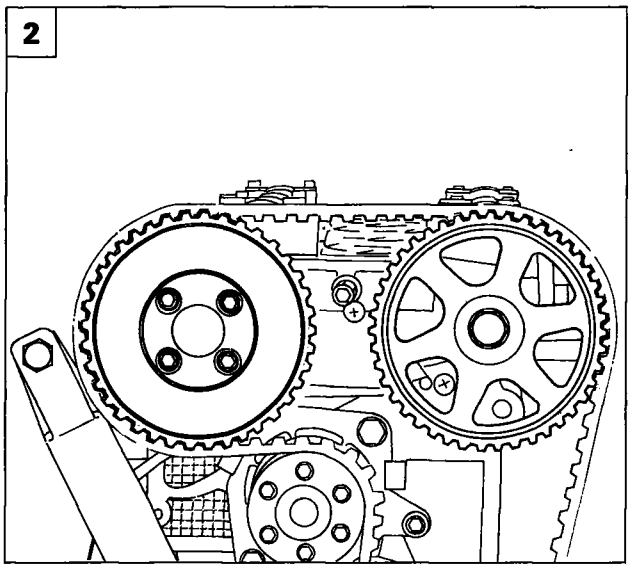

P4F35BA02

2. Using spanner 1860831000, tighten the exhaust and inlet side pullies to the recommended torques.
   Remove the tools positioned for timing and locking the camshafts and rotate the crankshaft through two revolutions in its direction of rotation.

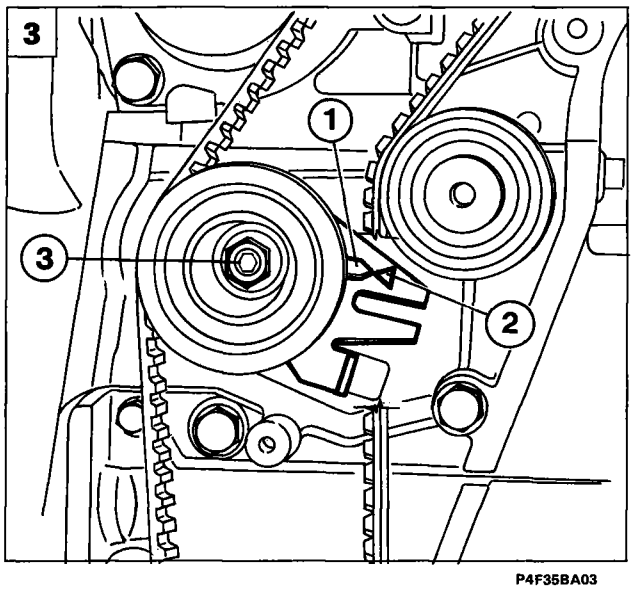

P4F35BA03

3. Loosen the nut fixing the tensioner and ensure that the moving reference on the tensioner (1) coincides with the fixed reference (2), then tighten the nut (3) fixing the tensioner to torque and proceed with refitting the components removed previously.

Copyright by Fiat Auto

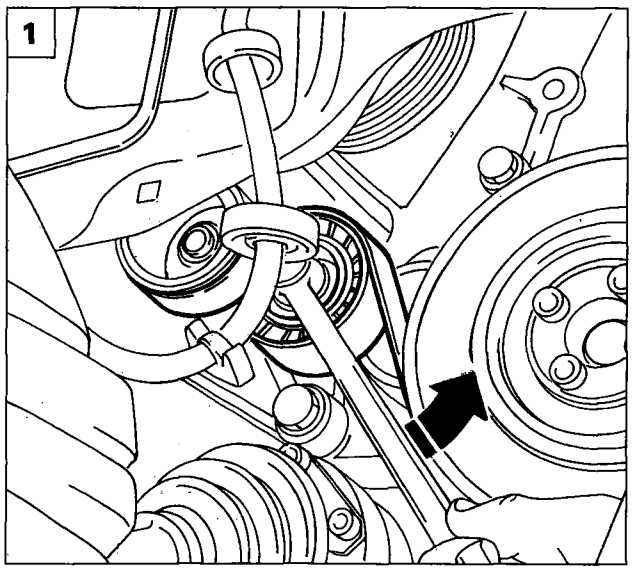

P4F12EX02

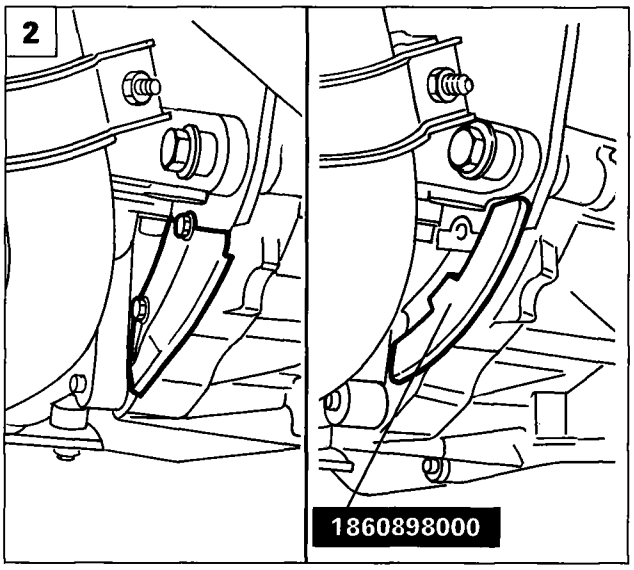

P4F13EX04 P4F13EX03

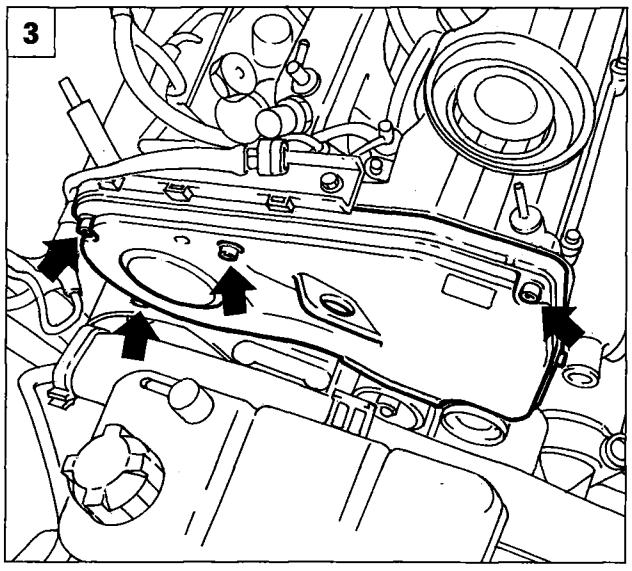

P4F14EX04

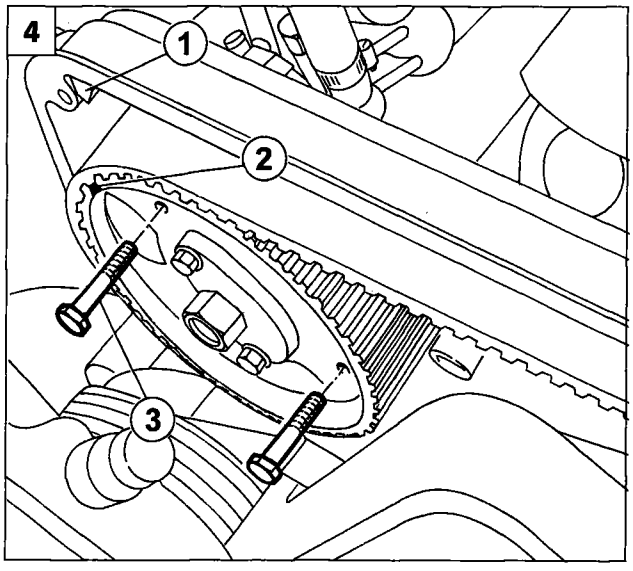

P4F12GX04

Marea 1910 TD 75 and 100

Position the vehicle on a lift, then:

- disconnect the negative battery lead;
- remove the right front wheel;
- remove the right wheel arch liner.

1. Rotate the auxiliary shaft belt tensioning device in the direction shown by the arrow, release the belt tension and remove it.
2. Remove the lower shield for the engine compartment, undo the bolts for the gearbox shield and position the flywheel lock 1860898000. Then remove the damper flywheel (auxiliary shaft drive pulley).
3. Remove the lower shield for the timing drive belt; remove the connecting rod complete with mounting bracket near the timing belt upper shield, then remove the timing belt as well.
4. For the 1910 TD 75 version, check that the injection pump timing is correct, making sure that the references (1) and (2) illustrated are in line, then lock the pulley in position using the service bolts (3) inserted in the special openings in the actual pulley.

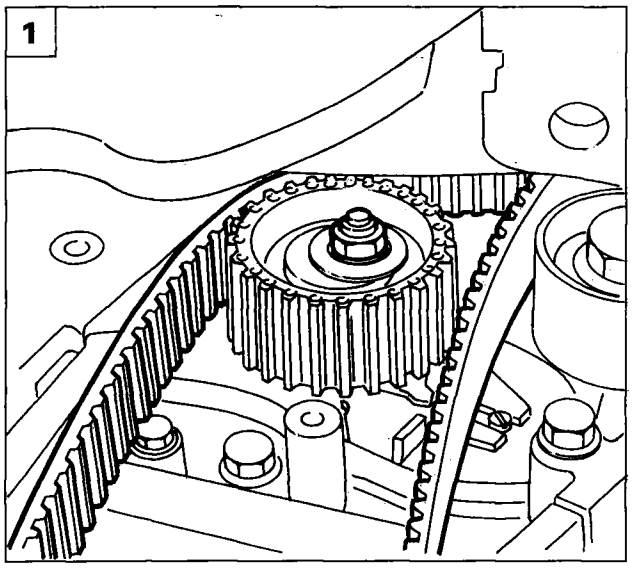

P4F17FX01

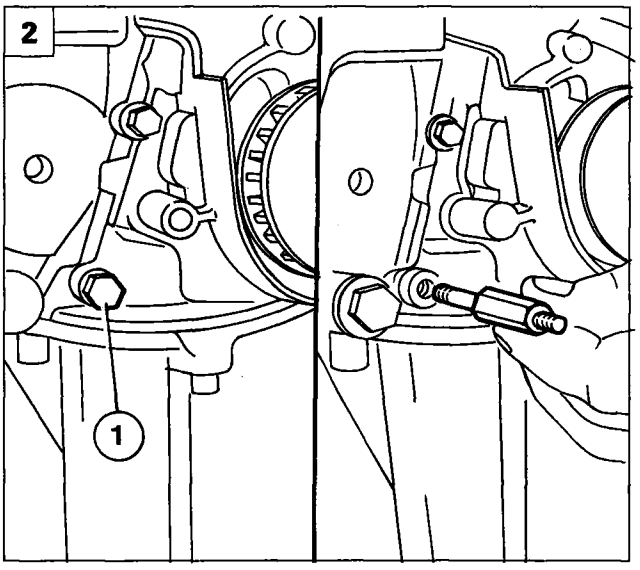

P4F15EX01

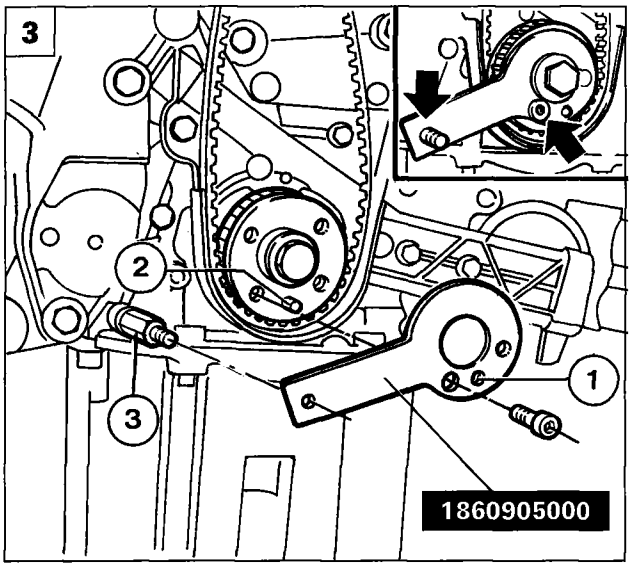

P4F15EX03

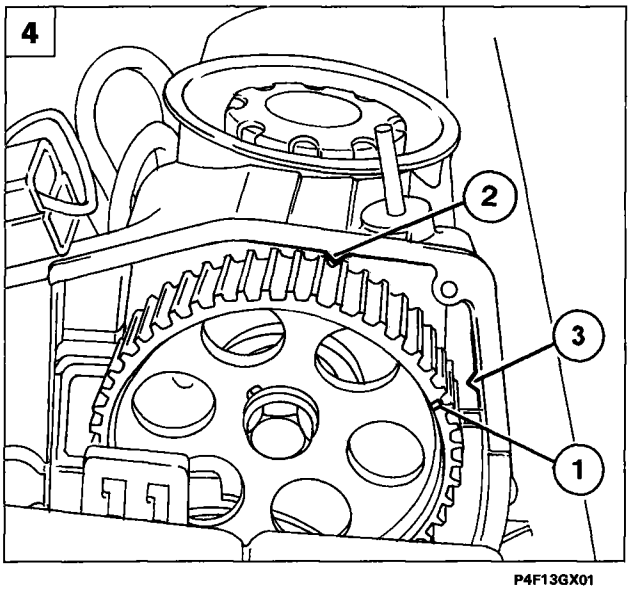

P4F13GX01

1. Loosen the nut illustrated for the tensioning device, release the belt tension, then remove the belt.

Refitting and tensioning the timing belt

2. Remove the bolt (1) illustrated fixing the oil pump; position the pin for tool 1860905000 in place of the bolt. Then fit the timing belt on the crankshaft drive gear only.
3. Position tool 1860905000 on the crankshaft gear and the pin (3); rotate the crankshaft through small movements until the dowel (2) matches with the opening (1). In this position the first cylidner is at T.D.C.
4. Using tool 1860831000, rotate the camshaft pulley until the following alignments are achieved:
   - up to engine n° 416499
     the reference (1) on the pulley should move 7 teeth (in a clockwise direction) in relation to the reference (2) on the tappet cover.
   - from engine n° 416450
     the reference (1) on the pulley should be aligned with the reference (3) on the tappet cover.

NOTE *The timing is correct when, with piston n° 1 at T.D.C., the reference (1) is in the position shown in the diagram (for engines up to n° 416449 the exact position of the reference can vary ± 3° engine or ½ point).*

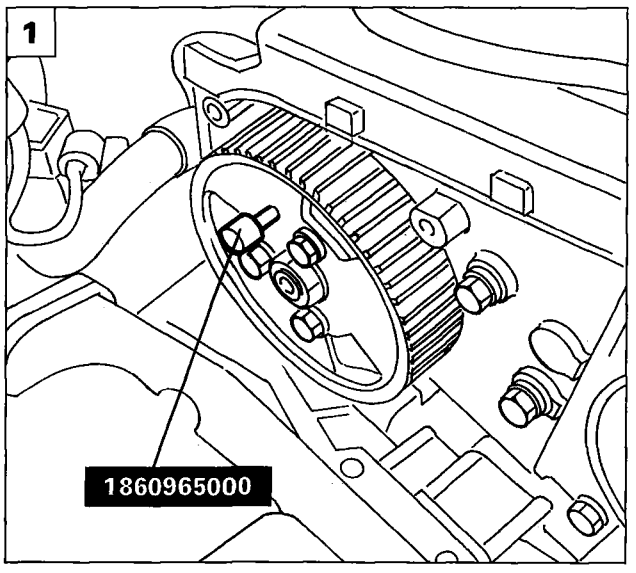

P4F16EX02

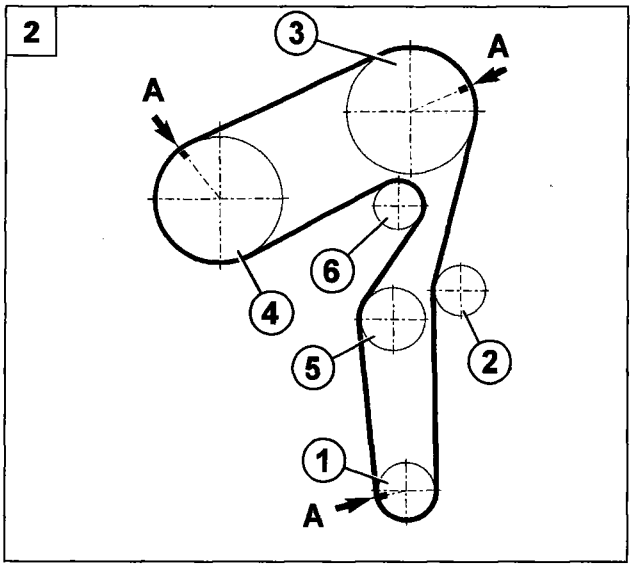

P4F14GX01

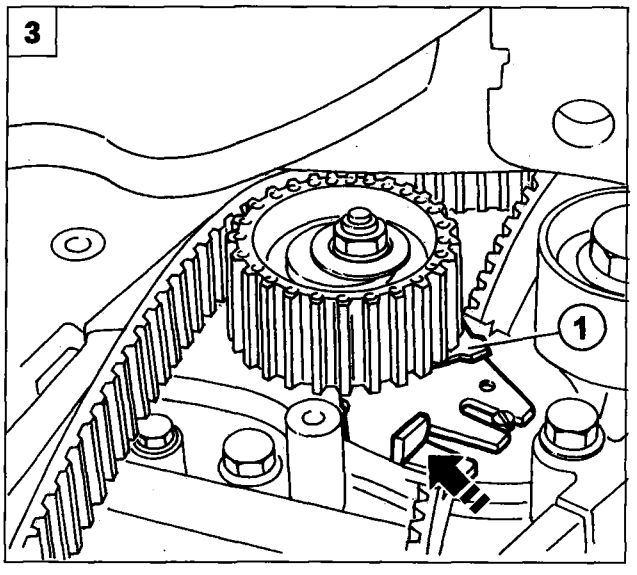

P4F14GX02

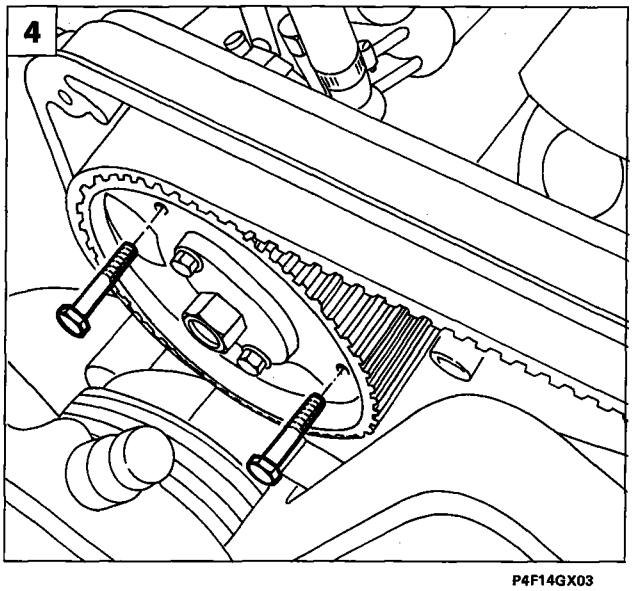

P4F14GX03

1. For the 1910 TD 100 version, loosen the bolts fixing the injection pump pulley and rotate it until pin 1860965000 can be inserted at the point illustrated.

2. Complete the fitting of the timing belt observing the following order:

   1. Crankshaft gear
   2. Fixed pulley
   3. Timing pulley
   4. Injection pump pulley
   5. Automatic tensioner
   6. Water pump

For all the pre and post modification engines, the fitting and timing of the new belts should be carried out following the alignment of the transverse references (A) on the back of the timing belt and the respective references on the pullies.

NOTE *Fit the belt so that the arrow is pointing in the direction of rotation of the engine.*

3. Exert force at the point shoen on the automatic tensioner placing the moving reference (1) for the tensioner in the maximum tension position, then lock the belt tensioner fixing nut.

4. For the 1910 TD 75 version, release the injection pump pulley by undoing the bolts positioned previously.

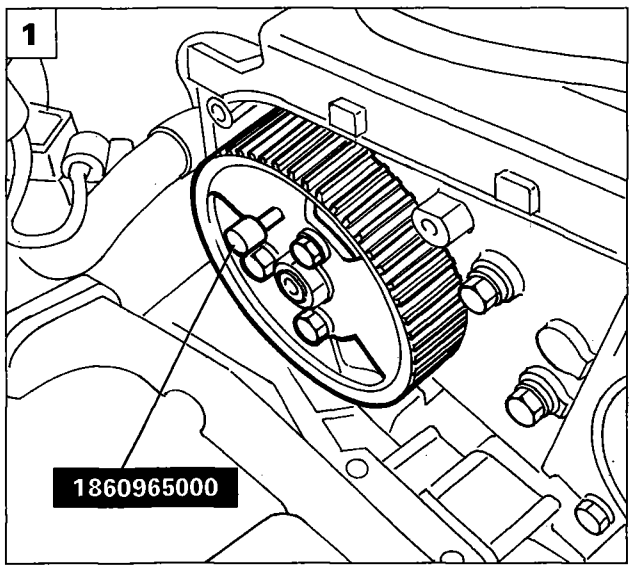

P4F17EX02

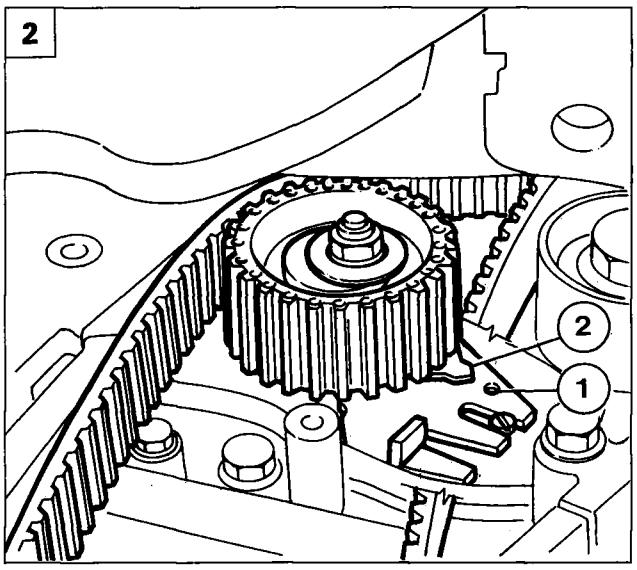

P4F18FX03

1. For the 1910 TD 100 version, fix the injection pump pulley tightening the fixing bolts to the recommended torque and remove pin 1860965000 from the housing.

2. Rotate the crankshaft through two revolutions in its direction of rotation, release the nut fixing the tensioner and ensure that the fixed reference (1) on the tensioner support coincides with the moving reference (2) on the belt tensioner. Lock and then tighten the tensioner nut to the recommended torque. Proceed with refitting the components removed previously reversing the order carried out for the operations described until now.

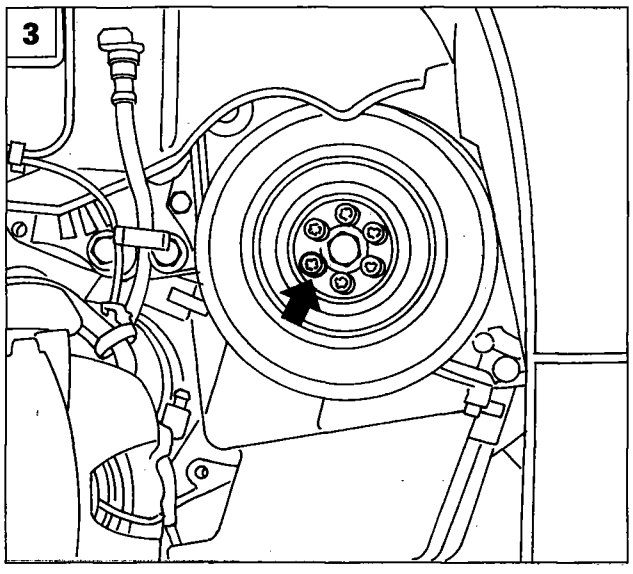

P4F12FX05

Marea 2387 TD

Position the vehicle on a lift, then:

- disconnect the negative battery lead;
- remove the right front wheel;
- remove the right wheel arch liner.

3. Undo the fixing bolt illustrated to allow the subsequent positioning of the tool for tensioning the belt.

Copyright by Fiat Auto

00.

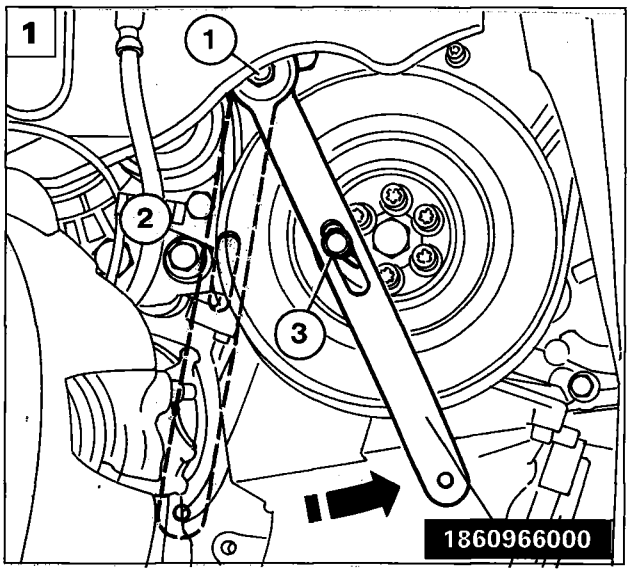

P4F12FX06

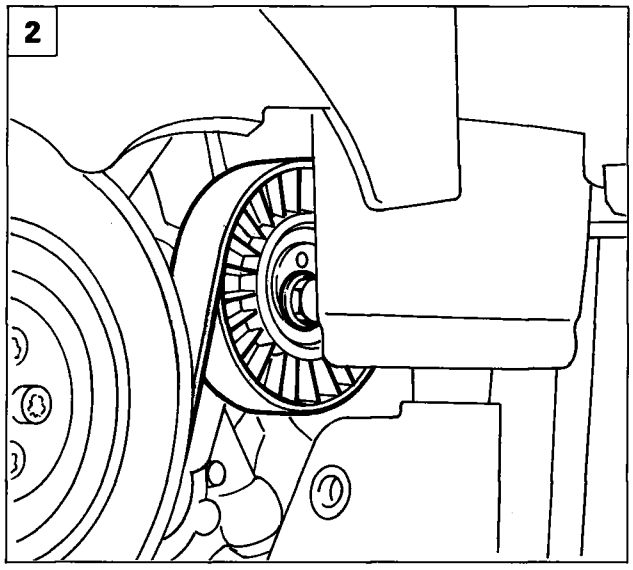

P4F13FX01

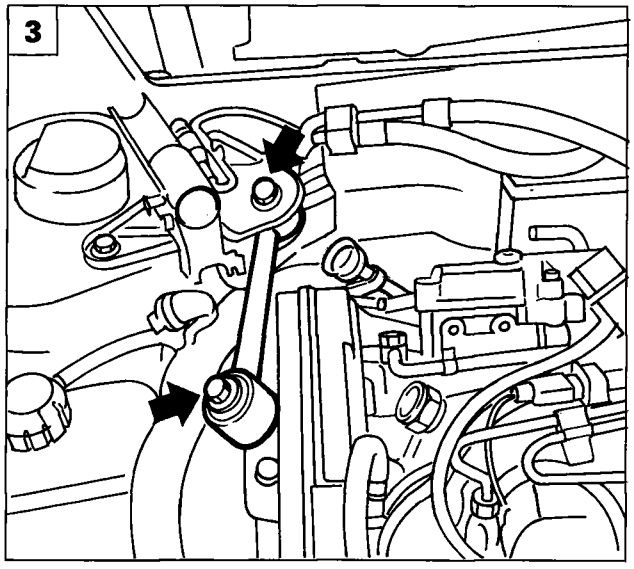

P4F06FX01

1. Using spanner 1860966000, loosen the tension of the belt rotating the automatic tensioner nut (1) in an anti-clockwise direction so that the slot (2) in the spanner coincides with the opening (3) in the pulley, then lock the tool inposition using a service bolt.
2. Loosen the tension of the moving pulley acting on the fixing bolt, then release the auxiliary shaft drive belt.
3. Remove the connecting rod from the mounting bracket acting on the fixing bolts shown in the diagram.
4. Remove the upper shield for the timing drive belt.
5. Remove the lower shield from the gearbox and position the flywheel lock 1860898000, then remove the auxiliary shaft drive pulley and lastly the flywheel lock.

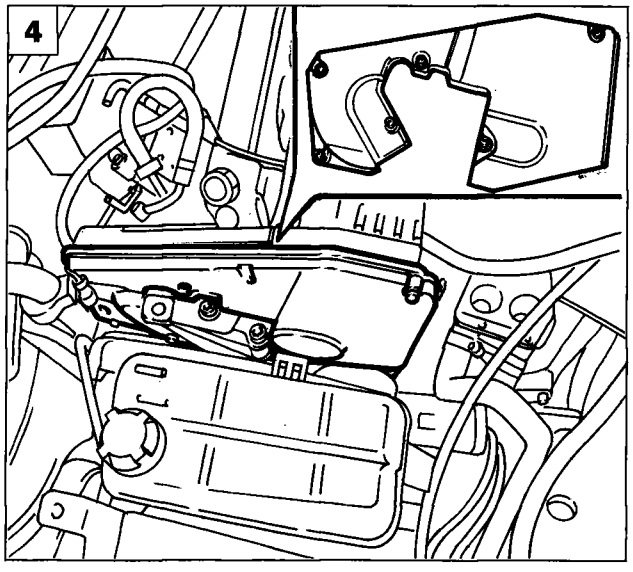

P4F14FX03

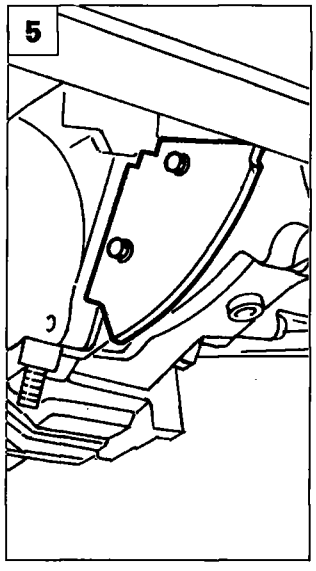

P4F14FX04

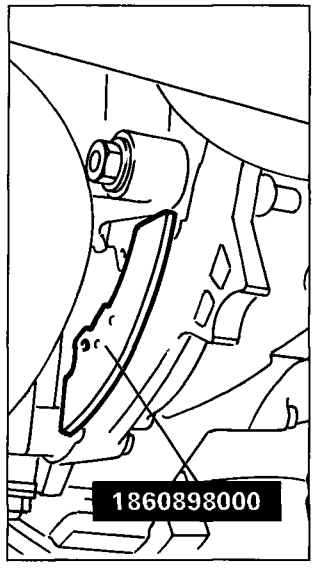

P4F15FX01

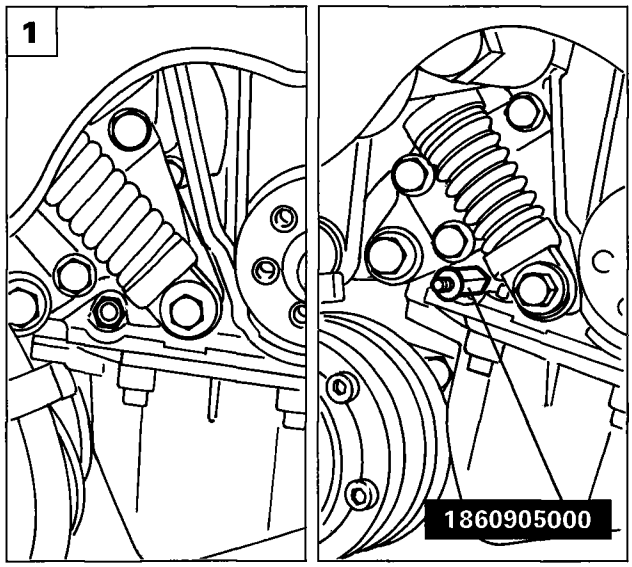

P4F15FX03 P4F15FX04

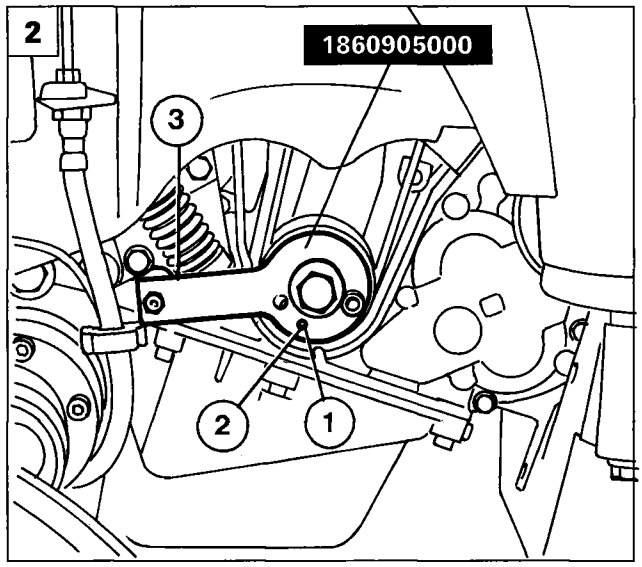

P4F15FX05

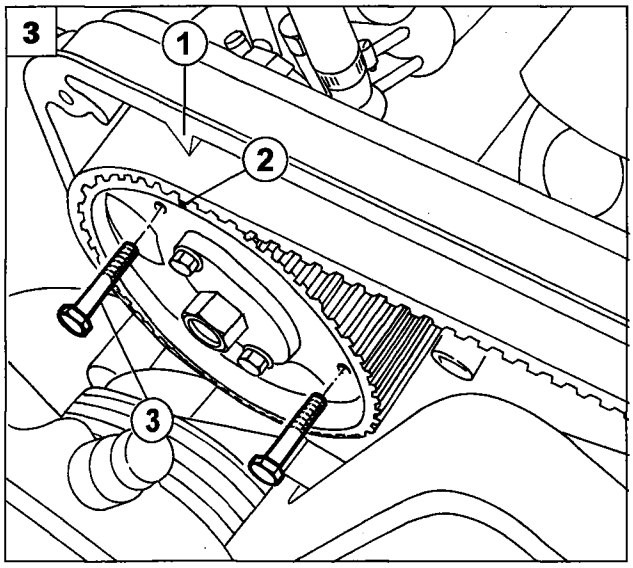

P4F15FX06

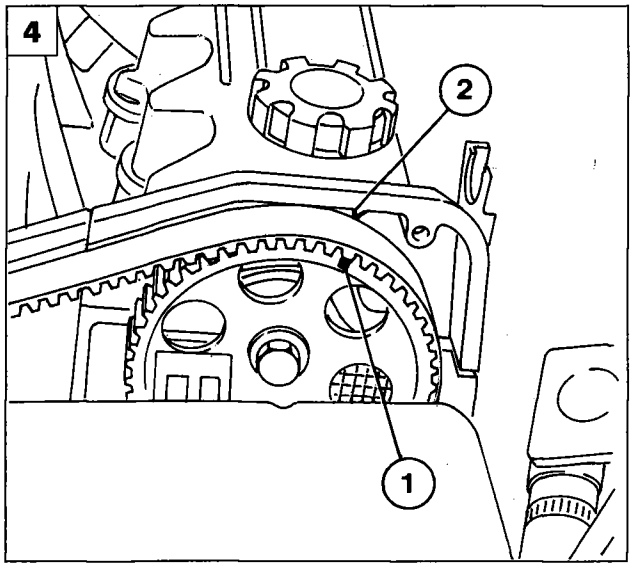

P4F16FX01

1. Remove the bolt illustrated fixing the oil pump; position the pin for tool 1860905000 in place of the bolt removed.
2. Position tool 1860905000 on the crankshaft gear and the pin (3); rotate the crankshaft using small movements until the centering dowel (2) matches with the opening (1). In this position the first cylinder is at T.D.C.
3. Check that the injection pump timing is correct by making sure that the references (1) and (2) illustrated are aligned, then lock the pulley in position using the bolts (3) inserted in the special openings in the actual pulley.
4. Check that the reference (1) for the camshaft pulley is aligned with the reference (2) on the tappet cover.

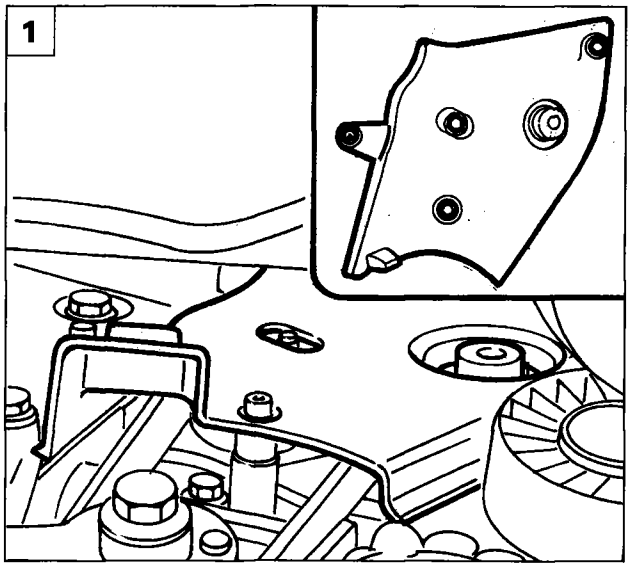

P4F16FX03

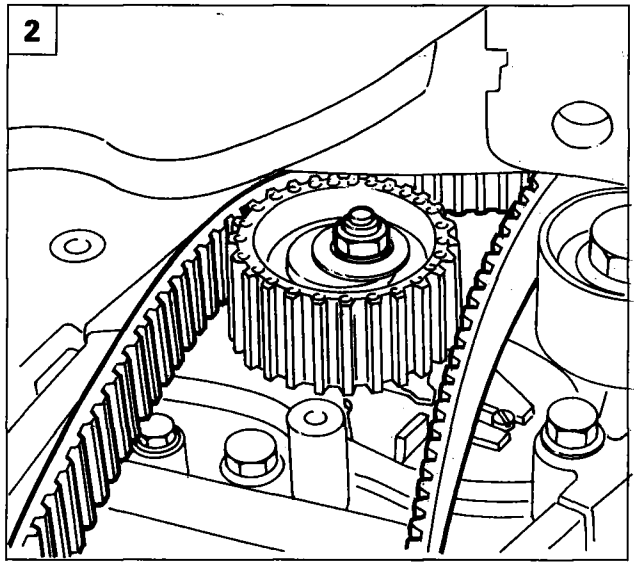

P4F17FX01

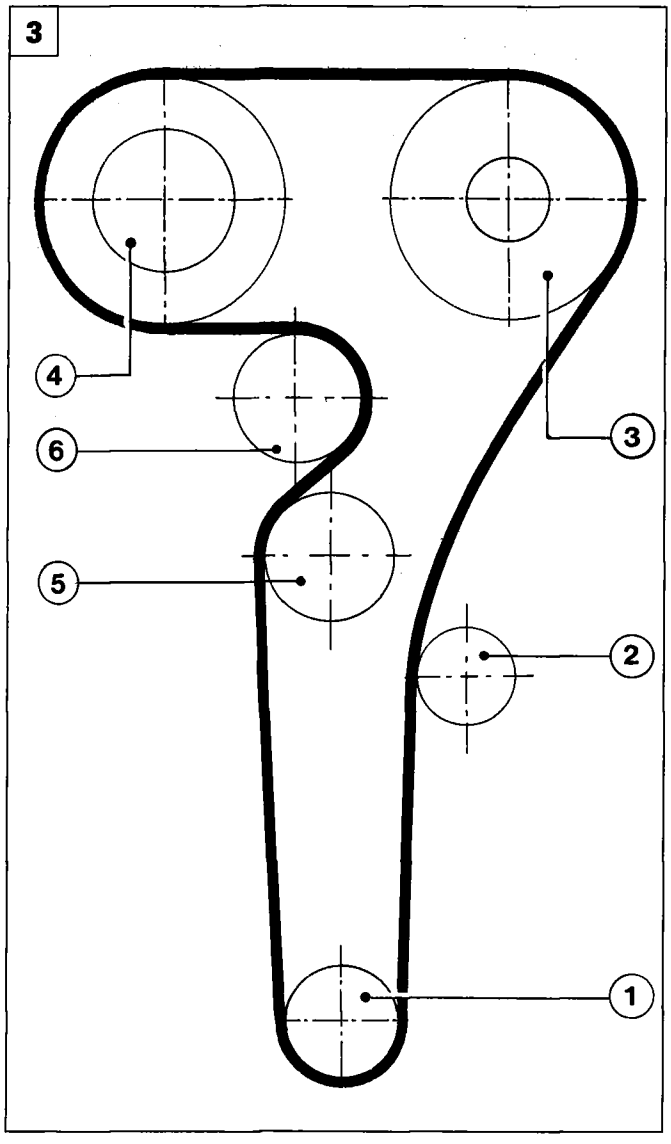

P4F15CX02

1. Working with a spanner cut to the appropriate size, remove the fixed pulley for the auxiliary shaft belt, then remove the lower shield for the timing belt underneath. Also remove the support for the connecting rod undoing the fixing bolts.

2. Loosen the belt tensioner nut, remove the belt from the injection pump and timing pullies, raise the lift, position the flywheel lock 1860898000, remove tool 1860905000 previously positioned to determine T.D.C., then remove the timing belt.

Refitting and tensioning the timing drive belt

3. Fit the toothed belt on the crankshaft gear, remove the flywheel lock positioned previously and fit tool 1860905000 for determining T.D.C.; complete the fitting of the timing belt observing the following order:

   1. Crankshaft gear
   2. Fixed pulley
   3. Timing pulley
   4. Injection pump pulley
   5. Automatic tensioner
   6. Water pump

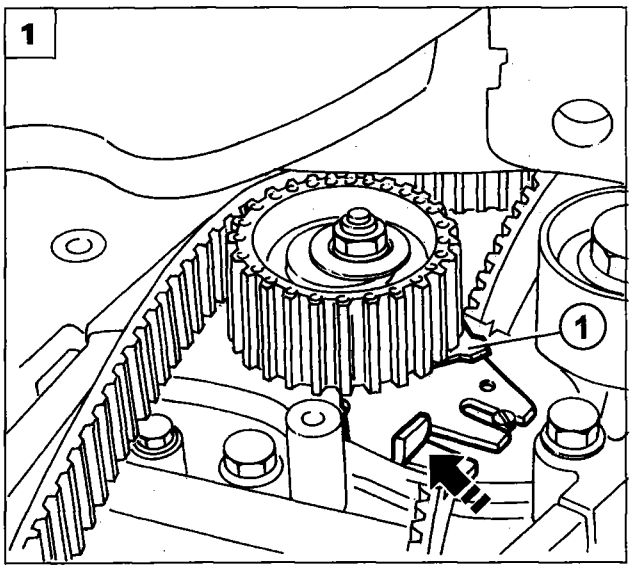

P4F14GX02

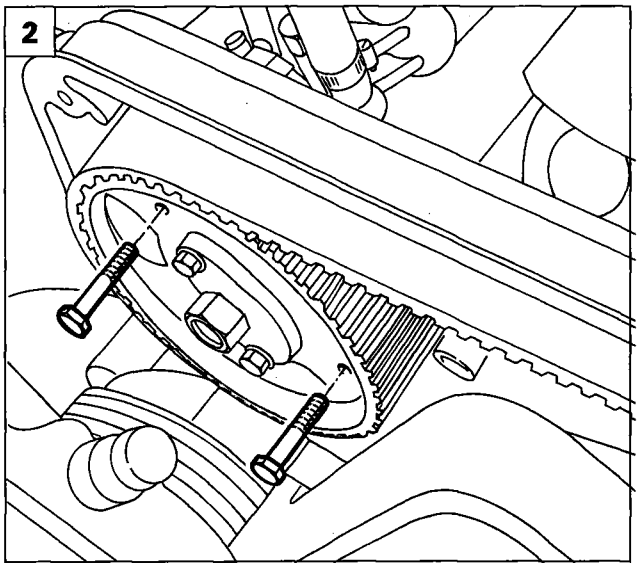

P4F18FX02

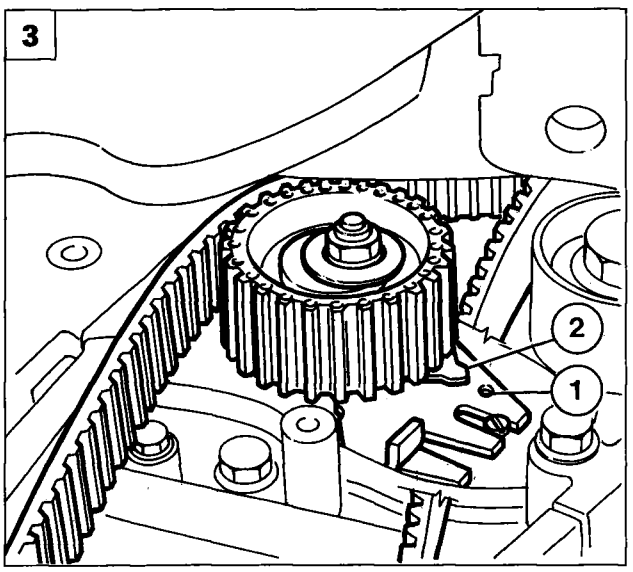

P4F18FX03

1. Exert force at the point shown on the automatic tensioner placing the moving reference (1) for the tensioner in the maximum tension position.

2. Release the injection pump drive pulley by undoing the two bolts positioned previously.

3. Rotate the crankshaft through two revolutions in its direction of rotation, release the nut fixing the tensioner and ensure that the fixed reference (1) on the tensioner support coincides with the moving reference (2) on the belt tensioner. Lock and then tighten the tensioner nut to the recommended torque. Proceed with refitting the components previously removed when removing the actual belt.

4. To refit the auxiliary shaft drive belt, place tool 1860968000 on the moving pulley (not locked) in line with the appropriate openings, rotate the lever and tension the belt. Lock the bolt fixing the moving pulley in this position. Undo the bolt securing spanner 1860966000 (shown in the inset), then reposition the bolt fixing the auxiliary shaft pulley. The automatic tensioner pre-loaded spring ensures the correct tension for the belt.

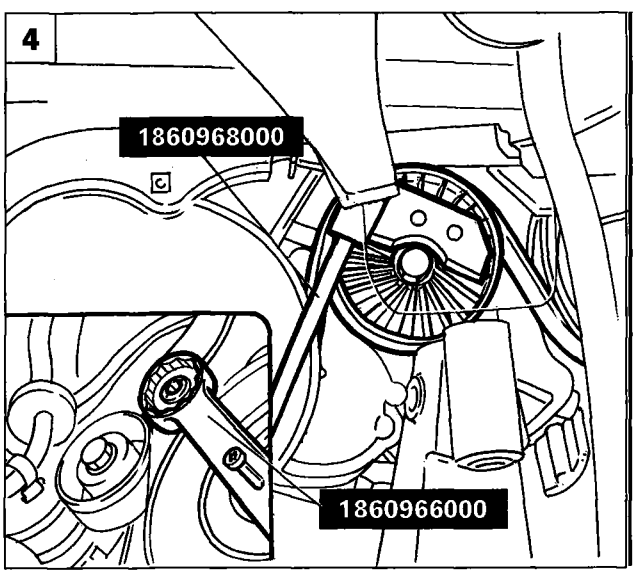

P4F13FX05

00.

19 REPLACE SPARK PLUGS AND CHECK LEADS

The cleanliness the condition of the spark plugs are critical for the efficiency of the engine and for containing pollutant emissions. The following types of spark plug are fitted:

	Spark plug type
1370 12v 1581 16v	Champion RC8BYC Golden Lodge 2HLDR NGK BKR6EKC
1747 16v	Fiat 7GBMSR Champion RC7BMC Golden Lodge 2HLDR NGK BKR6EKC
1998 20v	Fiat 7GBMSR Champion RC7BMC

Only use recommended type spark plugs: if the heat rating is insufficient or not guaranteed for the correct period, problems can arise.

Also check the condition of the supply cables making sure that there are no cuts, cracks or restrictions along the entire length.

NOTE *Carry out the following operations with the engine cold.*

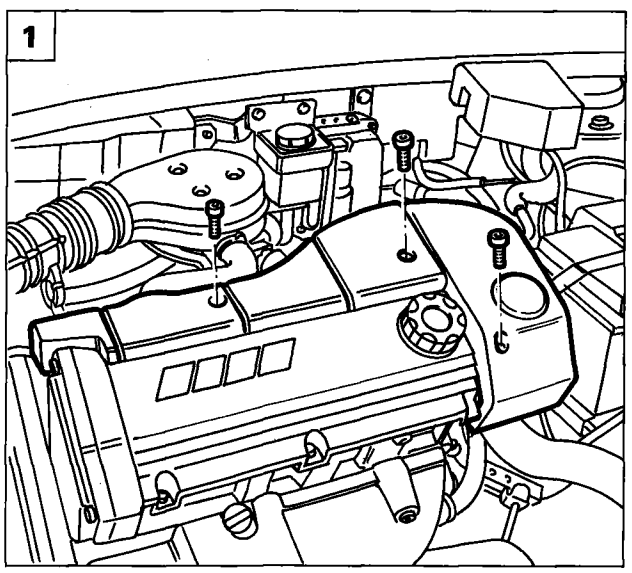

P4F44BA01

Marea 1370 12v

1. Remove the cylinder head shield shown in the diagram.

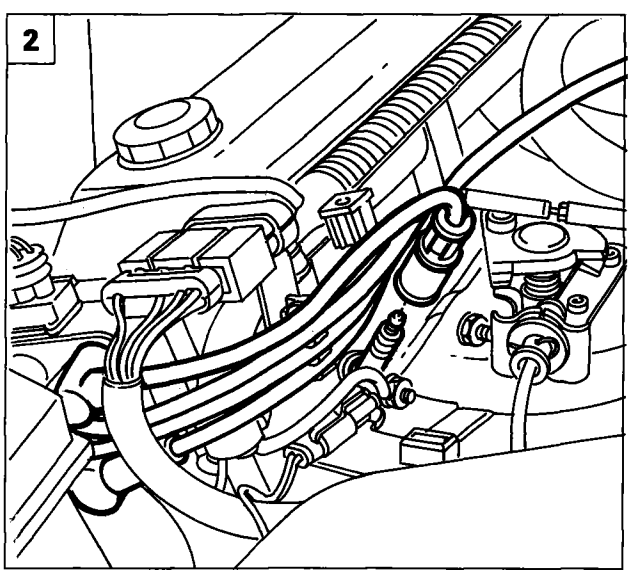

P4F44BA02

2. Disconnect the H.T. leads from the spark plugs taking great care when extracting the boots and remove and replace the spark plugs using an appropriate spanner.

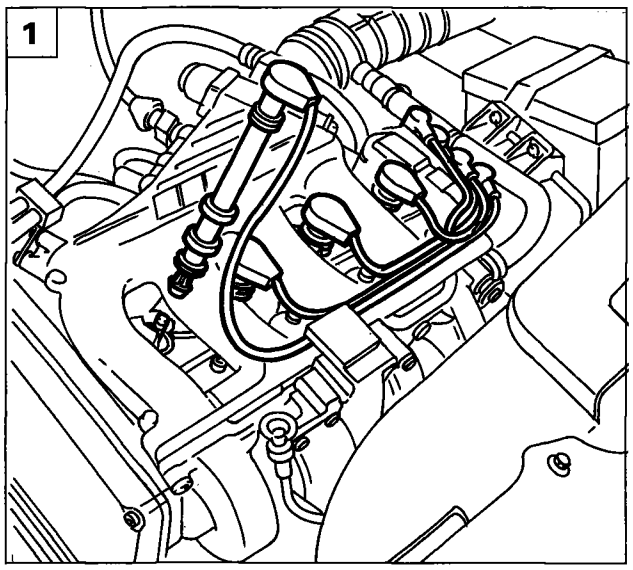

P4F45BA01

Marea 1581 16v

1. Disconnect the H.T. leads from the spark plugs taking great care when extracting the boots and remove and replace the spark plugs using an appropriate spanner.

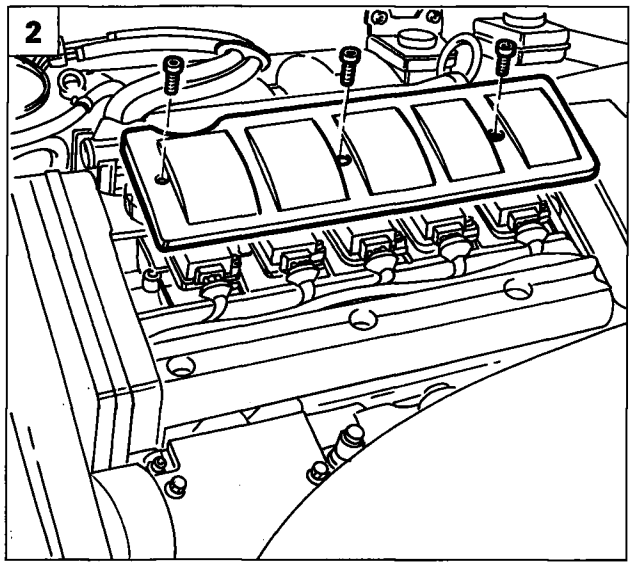

P4F45BA02

Marea 1747 16v - 1998 20v

2. Remove the cover for the ignition coils, then disconnect the supply connectors.

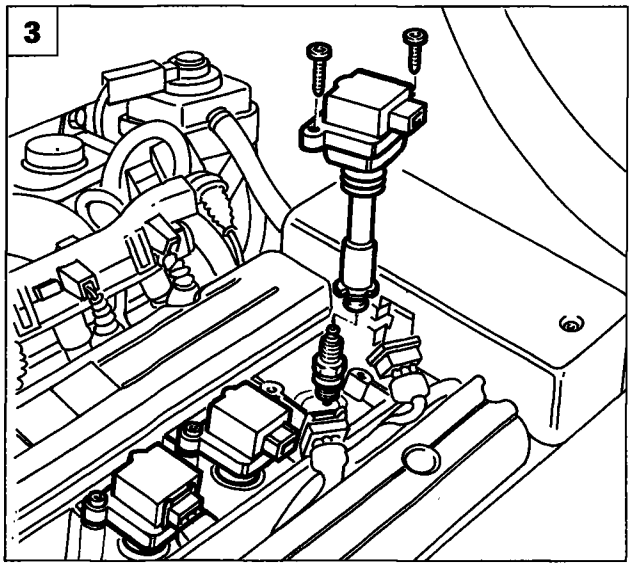

P4F45BA03

3. Remove the ignition coils acting on the on the fixing bolts; undo the spark plugs using a special spanner and proceed with their replacement.

Copyright by Fiat Auto

00.

20 CHECK OPERATION OF ENGINE CONTROL SYSTEMS (using autodiagnostic socket)

A complete electronic fault diagnosis of the injection/ignition system is carried out by connecting the Fiat/Lancia Tester or SDC or Examiner to the diagnostic socket.

The system is also equipped with an autodiagnostic function which recognizes, memorizes and signals any failures.

If a fault is detected and confirmed it is permanently memorized and the relevant sensor is excluded from the system until it is repaired.

When a fault is detected and confirmed the warning light in the dashboard usually comes on: when the fault is repaired the light goes out.

Working with the Fiat/Lancia Tester or SDC or Examiner it is possible to carry out a complete system fault diagnosis which consists of three stages:

1. display of a series of functional parameters,
2. display of the errors or their cancelling;
3. activation of certain actuators (active diagnosis).

Unlike the Fiat/Lancia Tester, the SDC and Examiner equipment use a "touch screen" type display which is easy to use and can display several parameters simultaneously; a single CD ROM, which can be periodically updated, makes it possible to carry out fault diagnosis for electronic systems on all Group vehicle models. Also, if connected to a printer, the results of the fault diagnosis can be certified. In addition to the diagnostic functions these pieces of equipment have powerful integrated measuring instruments.

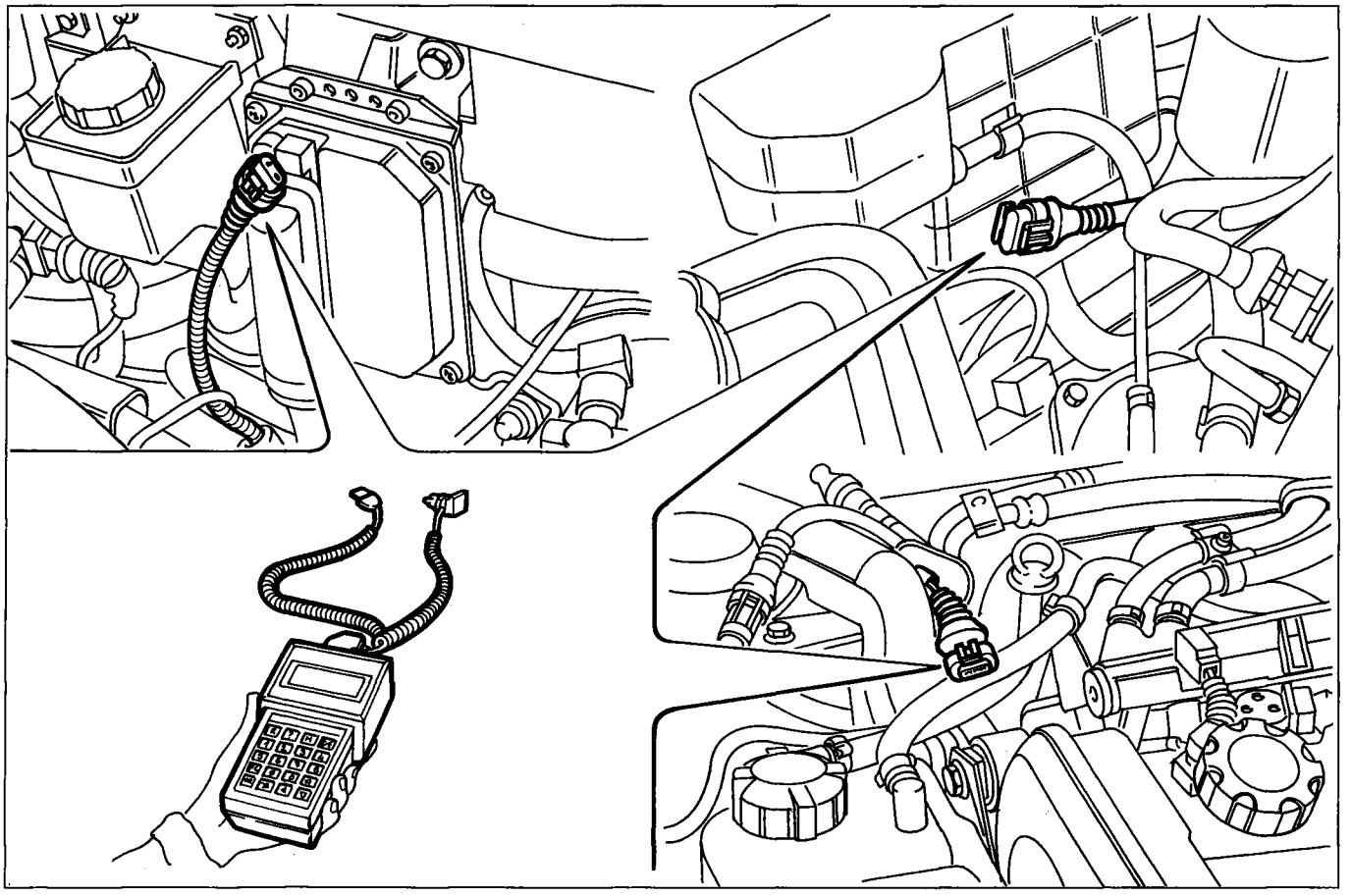

P4F46BA01

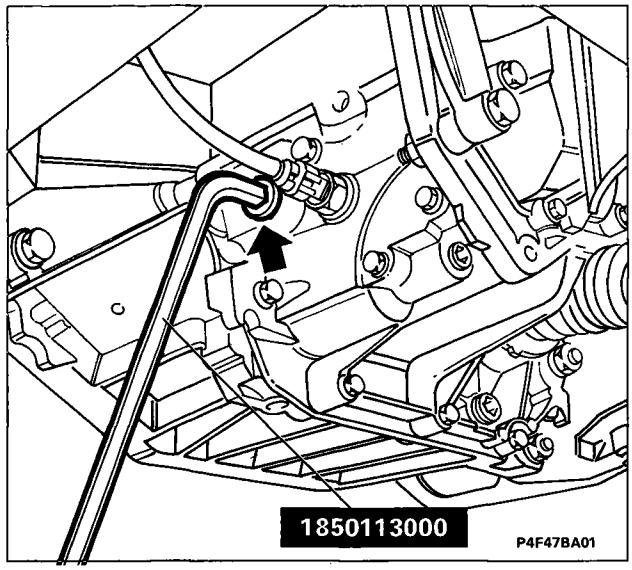

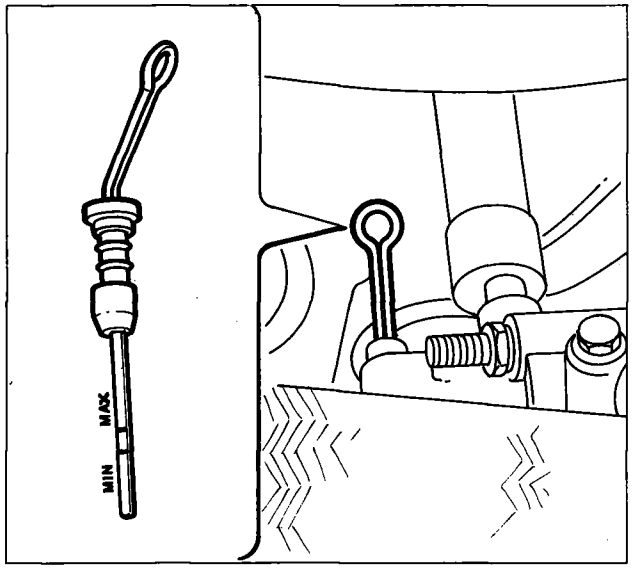

P4F47BA02

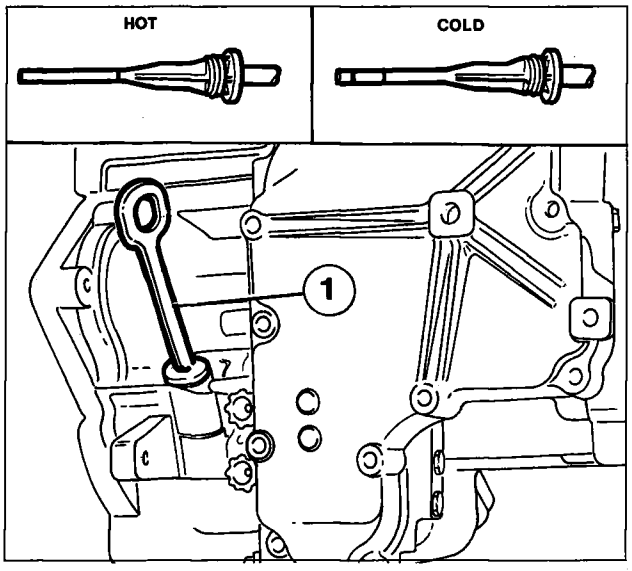

P4F47BA03

CHECK GEARBOX/DIFFERENTIAL OIL LEVEL

Position the vehicle on a lift. Undo the filler plug and check that the level of the oil is below the lower edgeof the opening.

If necessary, top up until the correct level is restored.
Retighten the filler plug tightening to a torque of 4.6 daNm.

Marea 2387 TD

The gearbox for the Marea 2387 TD is fitted with a dip stick at the rear of the engine which is accessible from the lower part of the vehicle; check that the gearbox oil level is between the MIN and MAX references on the dip stick.

CHECK AUTOMATIC GEARBOX OIL LEVEL (Marea 1581 16v)

NOTE *The gearbox oil level should be checked with the engine and the gearbox at normal operating temperature (gearbox oil temperature: 70 - 80°C), on account of which the vehicle must be driven for a suitable length of time before the check.*

Proceed with checking the gearbox oil level by carrying out the following operations:

- park the vehicle on a flat surface and apply the handbrake;
- with the engine idling, gently move the selector lever from position P to position 1, then return it to P;
- extract the oil dip stick (1) and clean it again; re-insert it completely in its housing.
- extract the dip stick once again and check that the level of the oil is between the two references on the side of the dip stick marked HOT.

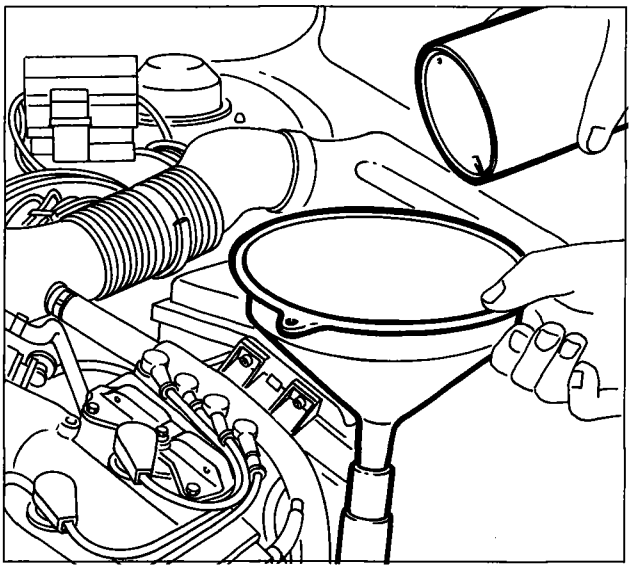

P4F39AB02

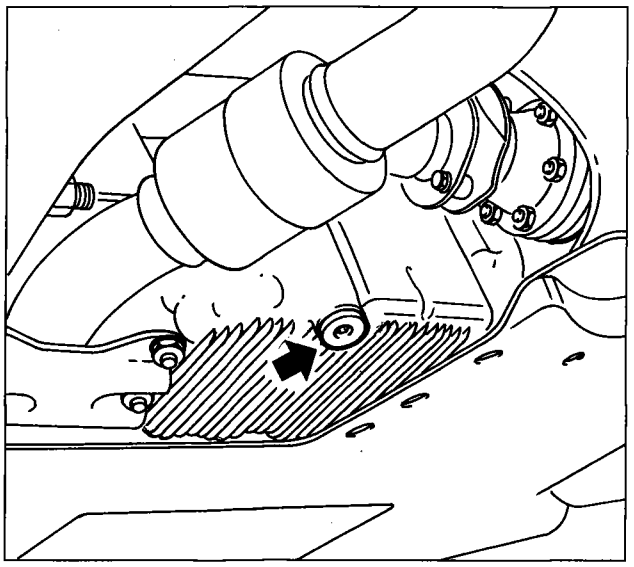

P4F48BA01

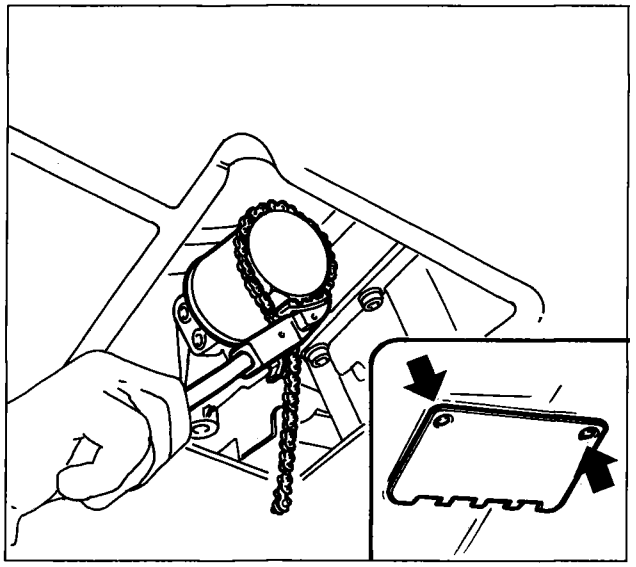

P4F48BA02

If the check is carried out at low gearbox oil temperatures, check that the level of the oil is within the reference on the side of the dip stick marked COLD. If possible, check the oil level again at the correct temperature (70 - 80 °C).

If the oil level is low, notify the Customer of any leaks or seepage and the need to solve these problems. To refill, extract the dip stick and, using a clean container in order not to contaminate the oil, introduce the appropriate amount of gearbox oil. The re-check the level using the dip stick and check that there are no leaks from the drain plug.

Recommended gearbox oil: TUTELA GI/2
Periodic replacement: 3 litres (2.7 kg)

CHANGE ENGINE OIL AND FILTER

21 21

- With the engine hot, remove the oil filler plug;
- remove the engine oil dip stick.

When the engine is hot, work very carefully inside the engine compartment as there is a danger of scalding. Remember that when the engine is hot the electric fan could come on with the risk of injury.

- Raise the vehicle, remove the lower engine compartment shield and undo the drain plug and let the oil drain completely into a suitable container.

Take great care when removing the drain plug as the oil could be very hot.

- Working from underneath the vehicle with a special tool, release the oil filter and remove it;

NOTE *For the 1747 16v and 1998 20v versions, it is not necessary to remove the lower engine shield because the drain plug is accessible from the rear of the engine and the oil filter can be reached by removing the special flap on the engine compartment lower shield.*

- clean the drain plug and tighten it with the seal, to the recommended torque;
- lubricate the seal for the new filter with oil and tighten it fully by hand.

- lower the vehicle, introduce the recommended type of oil in the quantities stated;
- check that the oil level is correct using the dip stick;
- reposition the oil filler plug, let the engine idle for around 2 minutes, switch off the engine and wait for several minutes, then check the level of the oil and make sure there are no leaks.

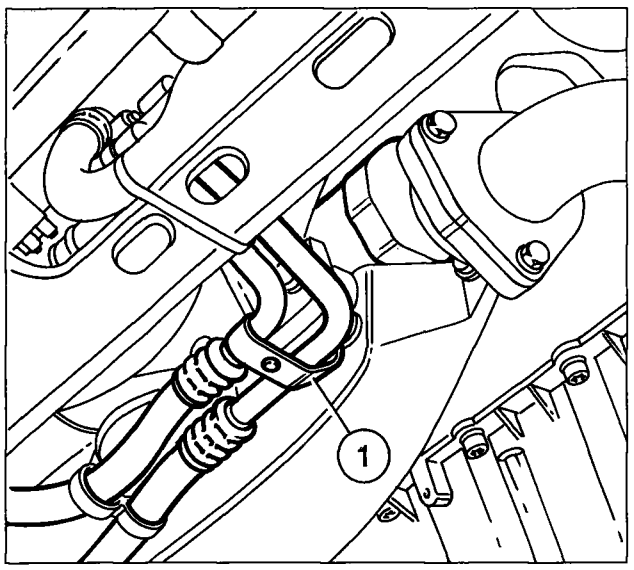

P4F49BA01

Marea 2387 TD

On the 2387 TD version, to replace the engine oil filter, after having removed the lower engine compartment shield it is necessary to release the bracket (1) in order to move aside the pipes illustrated and allow the replacement of the actual filter.

NOTE

If the vehicle is mainly used in one of the following particularly harsh conditions:

- towing a trailer or caravan
- dusty roads
- short, repeated journies (less than 7-8 km) at sub-zero temperatures
- engine often idling or driving long distances at low speeds

notify the Customer of the need to change the oil more often than indicated in the Planned Maintenance Programme.

The engine oil used and the oil filter replaced contain substances which are dangerous to the environment. The used oil and filters should be deposited in special containers and then disposed of in accordance with the laws in force.

Copyright by Fiat Auto

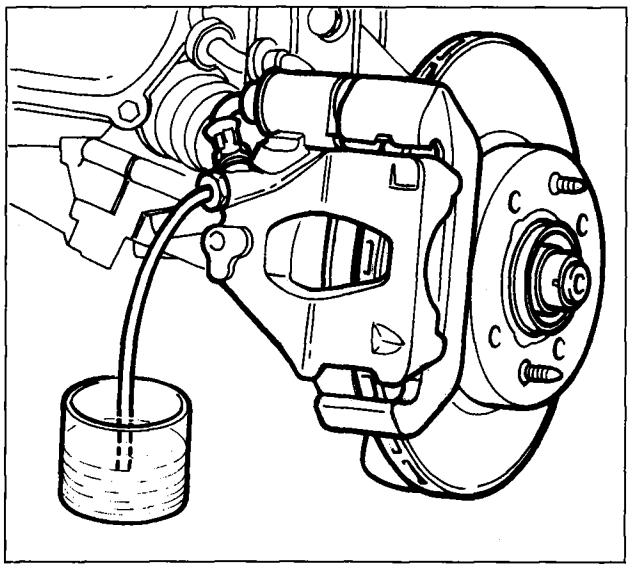

P4F50BA01

25 CHANGE BRAKE FLUID

The brake fluid is hygroscopic, i.e. it absorbs humidity. To avoid problems with braking, the brake fluid should be changed every two years, irrespective of the mileage.

- Raise the vehicle and, if necessary, remove the wheels; connect a flexible pipe to the bleed screws on the brake calipers (for the rear drum brakes to the bleed screw on the wheel cylinders), loosen them and, acting on the control pedal, drain the fluid into a suitable container.
- remove the plug from the brake fluid reservoir and (simultaneously to the operation of draining the oil fluid) introduce the recommended fluid into the system. Continue to introduce the new fluid until it comes out of the bleed screws, then tighten them.

Avoid the brake fluid, which is extremely corrosive, coming into contact with the paintwork. If it does, wash immediately with water.
The symbol (O), present on the container, identifies synthetic types of brake fluid, distinguishing them from mineral types. The use of mineral type fluids irreparably damages the rubber seals in the braking system.

- Bleed the system keeping the flexible pipe connected to the bleed screw and the opposite end immersed in a transparent container filled with the same fluid as the circuit;
- loosen the bleed screw and, at the same time, press the brake pedal letting it return slowly; repeat this operation until any air bubbles finish coming out;
- with the pedal fully depressed, tighten the bleed screw and remove the pipe. Carry out this operation separately for each wheel starting at the rear (the furthest from the brake fluid reservoir).

During the bleeding operation keep the level of the fluid in the reservoir above the MIN reference.
Do not reuse the hydraulic fluid drained during the bleeding procedure.

- Restore the level of the fluid in the reservoir and refit the cap; lastly, check the efficiency of the braking system.

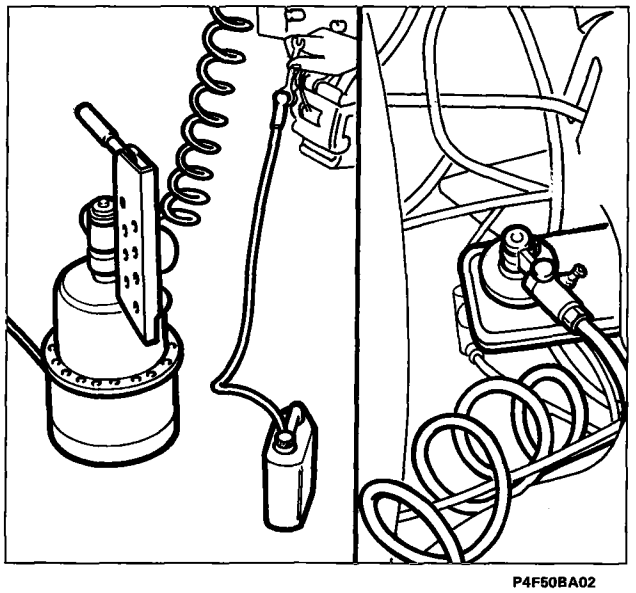
P4F50BA02

The bleeding operation can be carried out using the "Jollyfren" equipment. This equipment allows the hydraulic system to be bled quickly. The bleeding action is carried out simultaneously for both wheels by a single operator representing a considerable time saving.

NOTE *For versions with a hydraulic clutch (Marea 1998 20v and 2387 TD) it is necessary to drain the fluid in the circuit by connecting a flexible pipe to the clutch operating cylinder bleed screw, loosen it and, acting on the control pedal, drain the fluid into a suitable container. Proceed with bleeding the hydraulic clutch circuit in the same way as described for the braking circuit, using the clutch pedal instead.*

26 REPLACE THE POLLEN FILTER

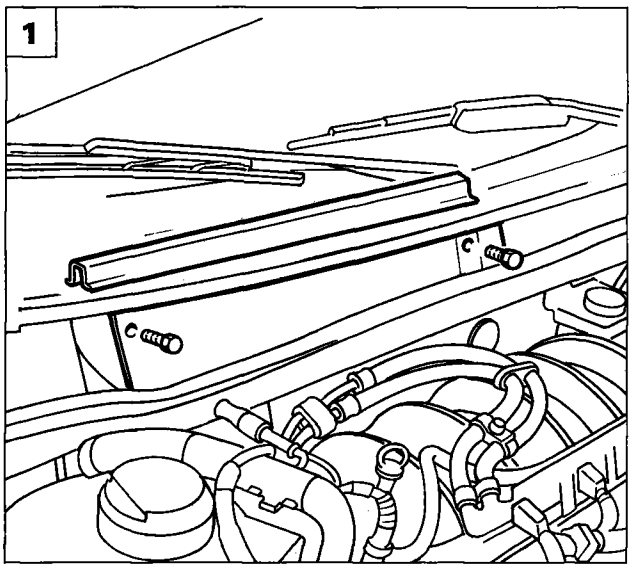

P4F51BA01

1. To gain access to the pollen filter it is necessary to lift up the trim shown in the diagram, then undo the bolts shown and remove the pollen filter access flap.

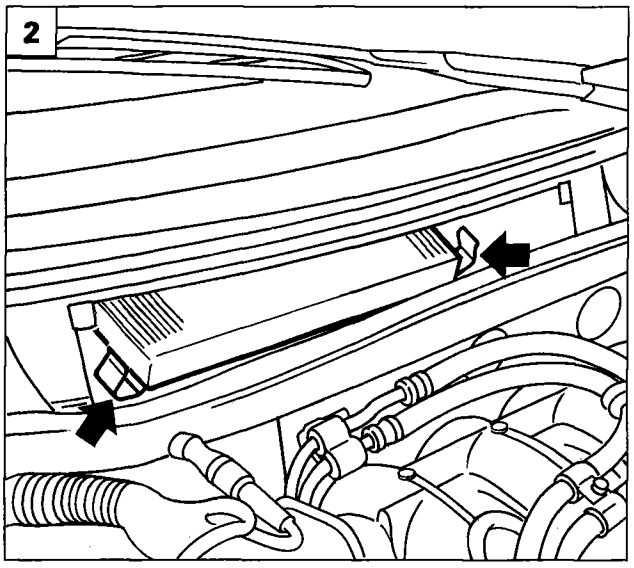

P4F51BA02

2. Release the side retaining springs in the pollen filter housing, extract it and proceed with the replacing.

NOTE *Failure to replace the filter can considerably reduce the efficiency of the climate control system.*
If the vehicle is often used in dusty or strongly polluted areas, advise the Customer of the need to replace the filter element more often; it should be especially replaced if a decrease in the flow rate of the air introduced into the passenger compartment is noticed.

Copyright by Fiat Auto

page

REMOVING-REFITTING

- Removing-refitting power unit 1

REPLACING AUXILIARY BELT

- Removing-refitting auxiliary belt 10
- Auxiliary component belt fitted on vehicle for air conditioned versions 11

REPLACING TIMING BELT

- Replacing timing belt 12

REPLACING COOLANT PUMP

- Replacing coolant pump 16

REMOVING-REFITTING CYLINDER HEAD

- Removing-refitting cylinder head 17

REMOVING-REFITTING RADIATOR

- Removing-refitting radiator 23
- Radiator filling procedure for heated versions 25
- Radiator filling procedure for air-conditioned versions 27

Copyright Fiat Auto

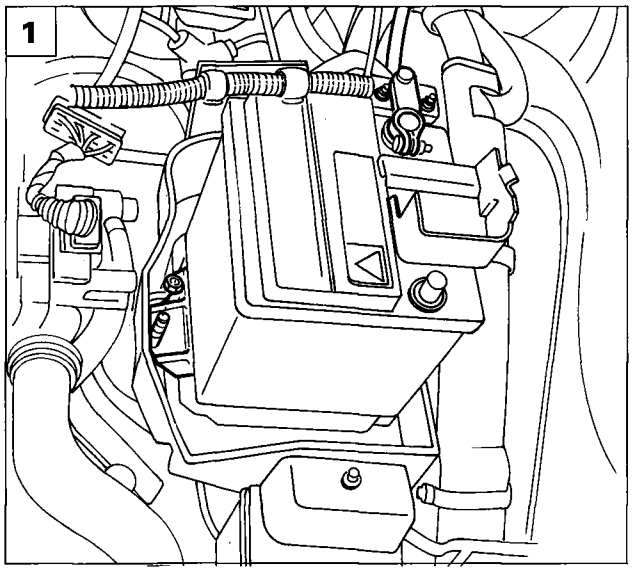

P4F01AX01

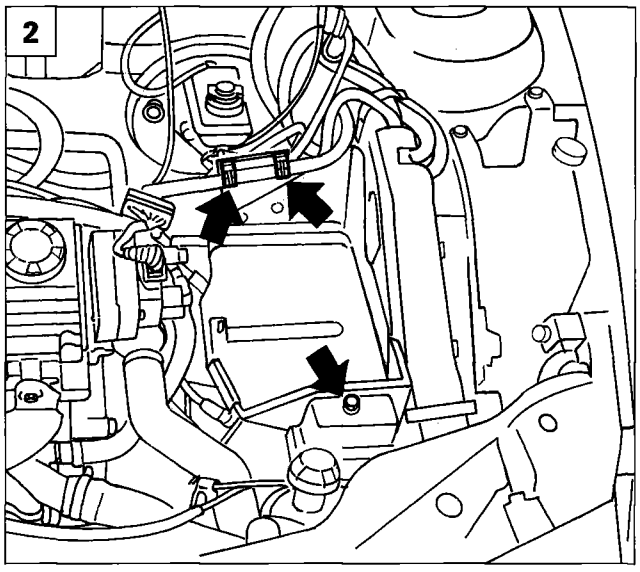

P4F01AX02

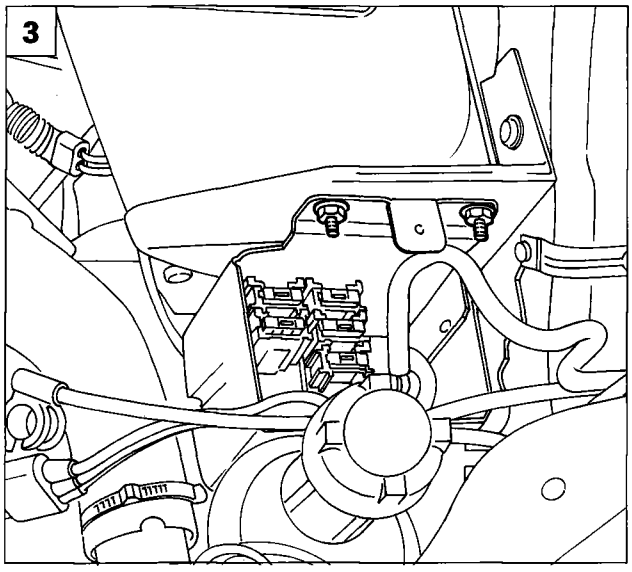

P4F01AX03

REMOVING-REFITTING POWER UNIT

Position the vehicle on a lift, remove the front wheels and then proceed as follows:

1. Disconnect the battery negative lead, lift the positive terminal protective cover and disconnect the lead; unscrew the nut retaining the battery to the case and remove from engine bay.
2. Release electrical leads shown in figure from retaining clip, then unscrew relay carrier box cover retaining screw.
3. Remove the nuts retaining the relay carrier box to the battery case, then place the box to one side.
4. Remove the screws retaining the battery case to the body.
5. Undo nuts retaining leads shown in figure to batteryr positive terminal.

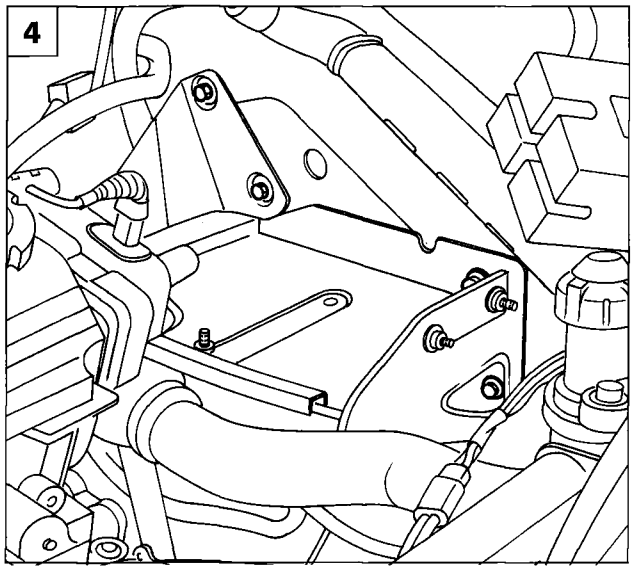

P4F01AX04

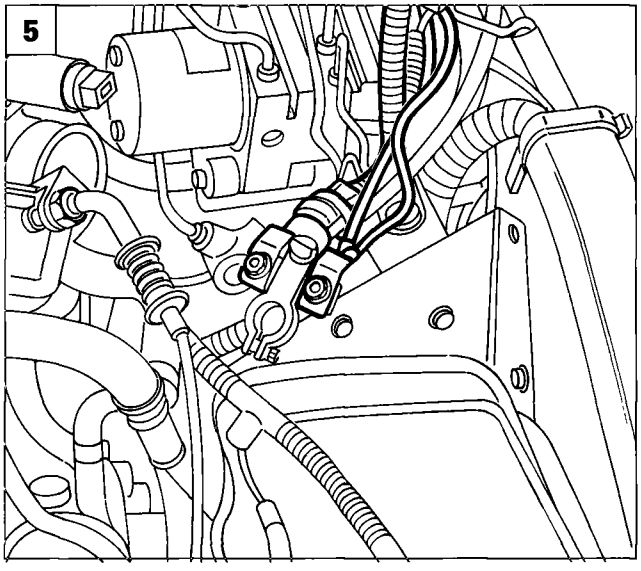

P4F01AX05

Copyright Fiat Auto

10.

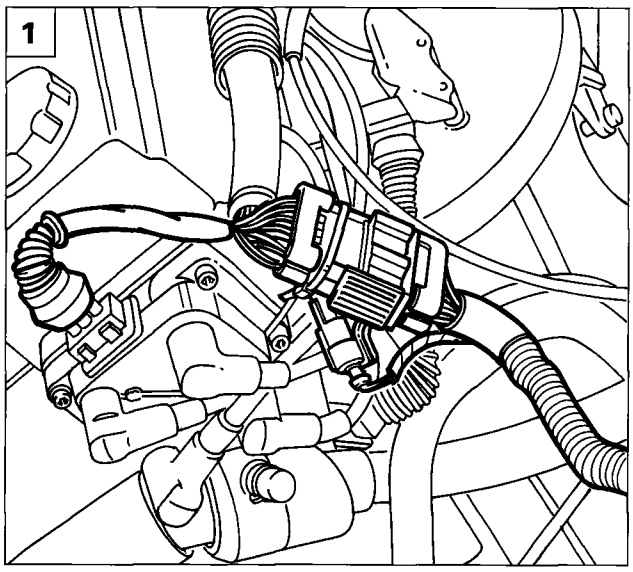

P4F02AX01

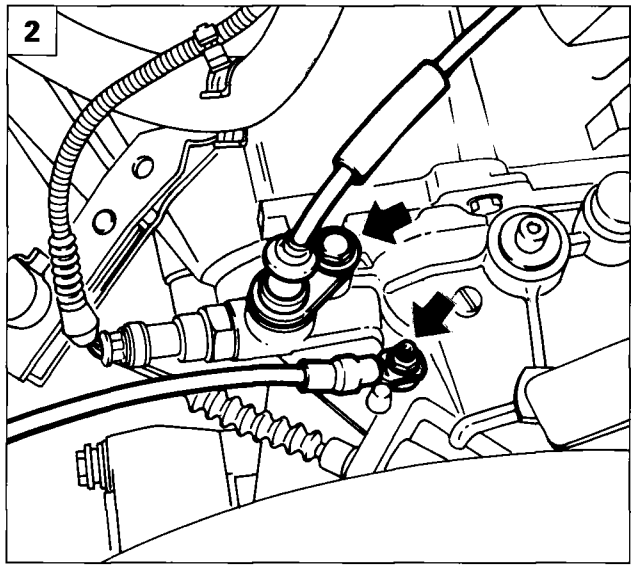

P4F02AX02

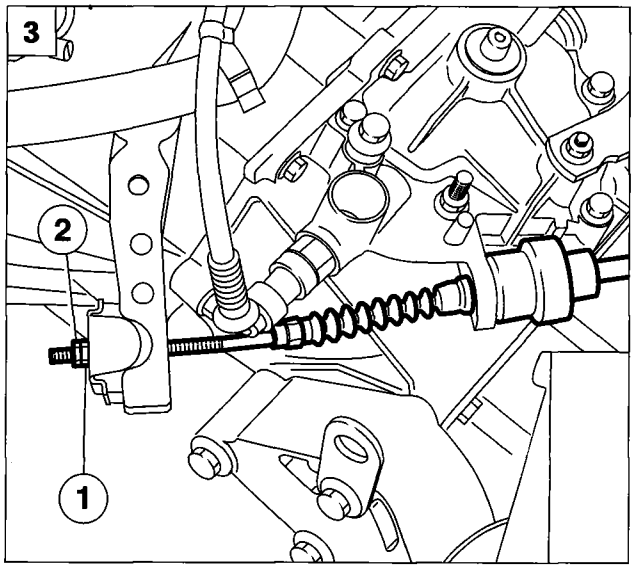

P4F02AX03

1. Disconnect both injection lead/front lead joints shown in the figure.
2. Disconnect reverse inhibition lead from gearbox by undoing the screw shown in the figure and the earth cable.
3. Undo nut (1) and lock-nut (2) to disconnect the clutch cable from the control lever.
4. Disconnect the gear lever by undoing the nut shown in the figure.
5. Disconnect the gear selection cable head, raise the retaining fork shown in the figure and place the assembly to one side in the engine bay.

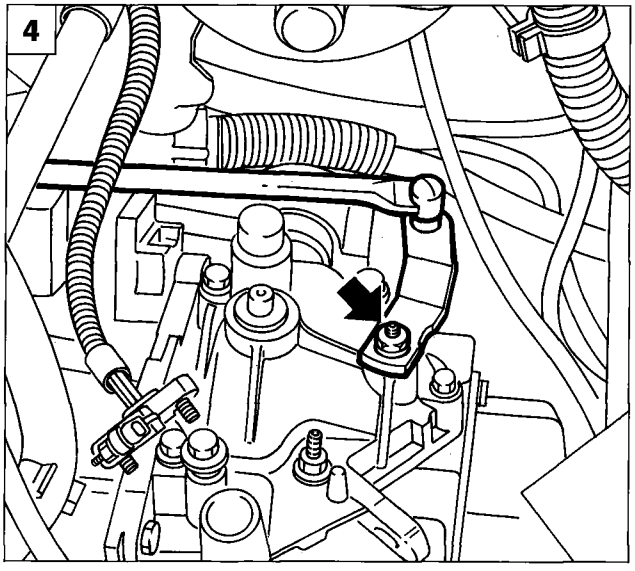

P4F02AX04

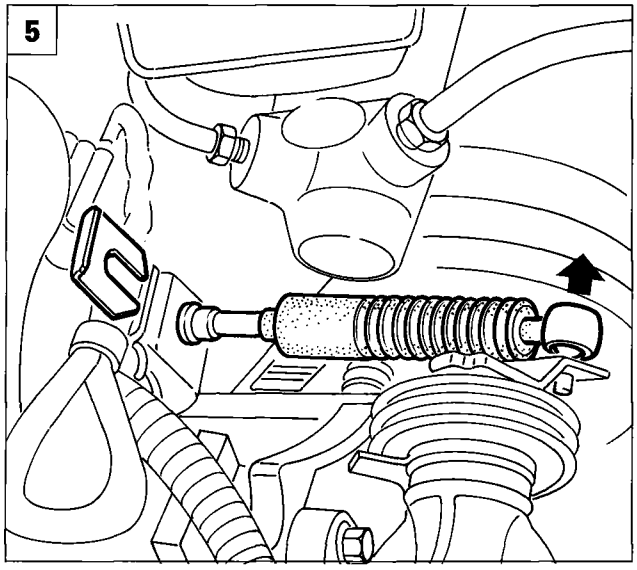

P4F02AX05

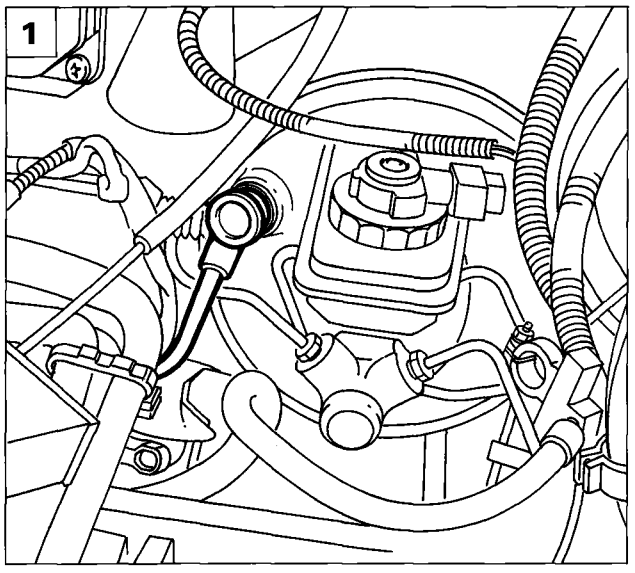

P4F03AX01

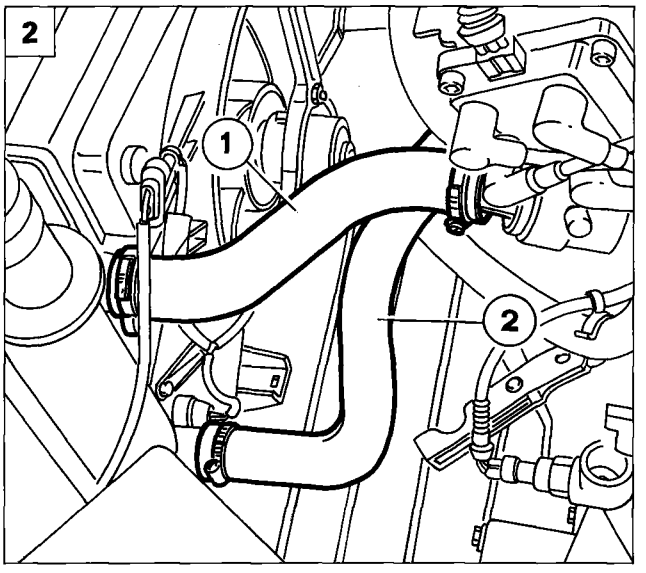

P4F03AX02

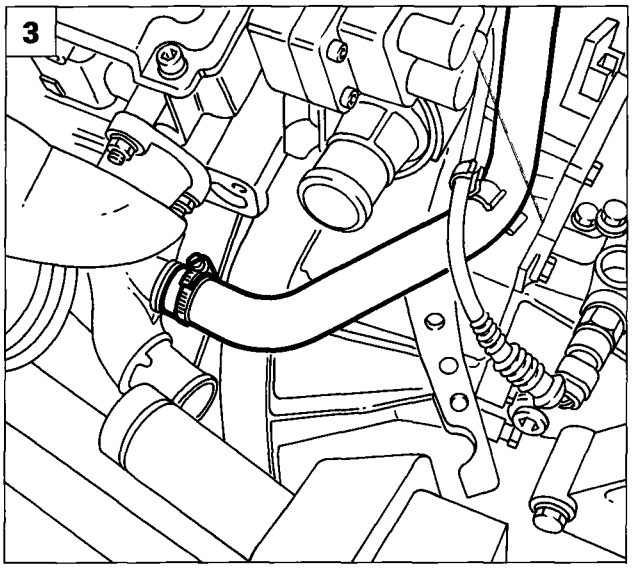

P4F03AX03

1. Disconnect the vacuum pipe from the brake servo.
2. Disconnect sleeve (2) by undoing retaining clips and drain coolant. Then disconnect sleeve (1).
3. Disconnect coolant return sleeve from heater shown in figure.
4. Disconnect sleeve delivering coolant to heater shown in figure.
5. Disconnect connections (1) supplying engine cooling fan and then unscrew screws retaining fan to radiant unit and remove fan.

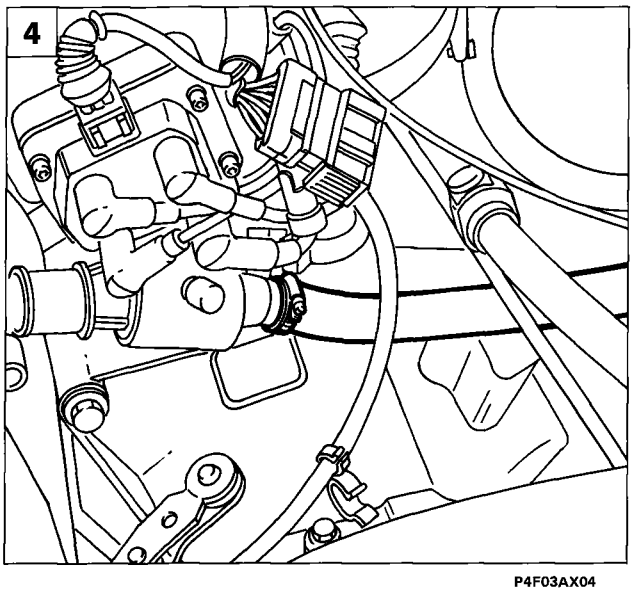

P4F03AX04

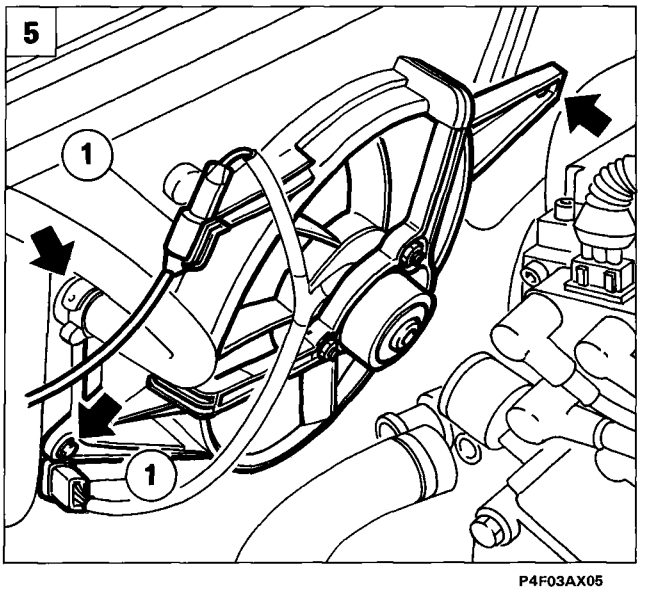

P4F03AX05

10.

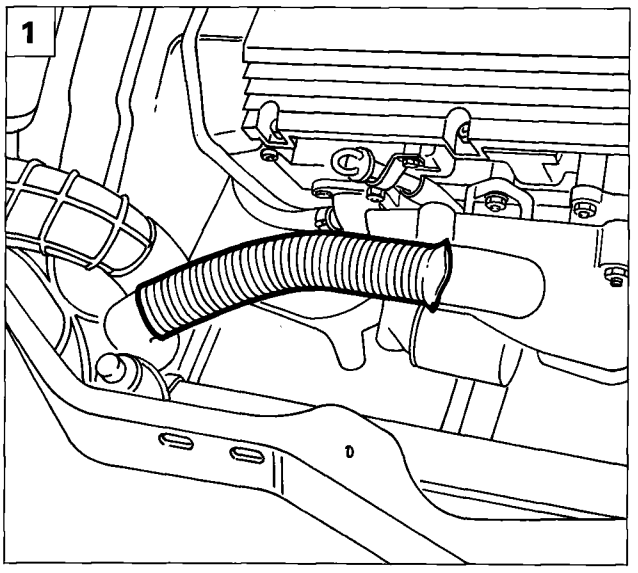

P4F04AX01

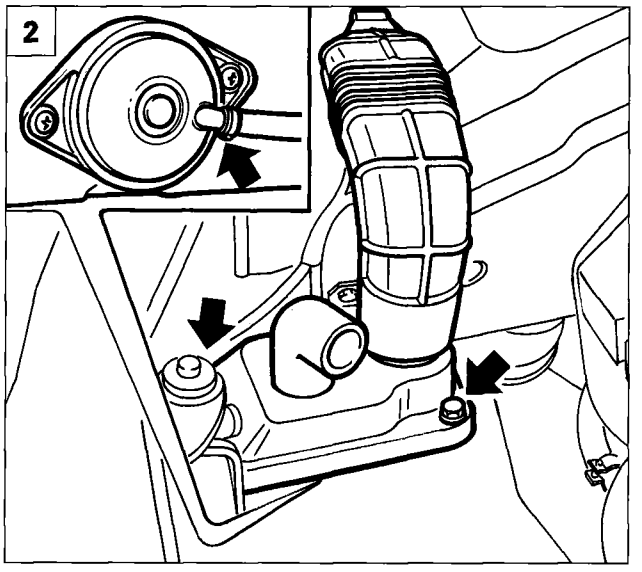

P4F04AX02

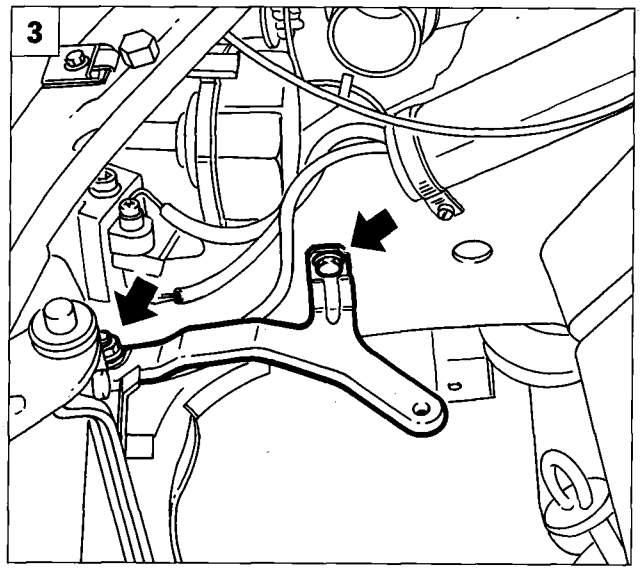

P4F04AX03

1. Disconnect the air intake line shown in the figure.
2. Remove the line shown in the figure, unscrew the screws retaining the thermostatically-controlled air intake, disconnect the underlying vacuum pipe and then remove the air intake assembly from the vehicle.
3. To facilitate removal of the power unit from the engine bay, remove the thermostatically-controlled air intake bracket by undoing the bolts shown in the figure.
4. Remove the pipe carrying air to the butterfly valve case.
5. Disconnect the fuel outlet and inlet lines and the vacuum pipe (1) from the butterfly valve case.

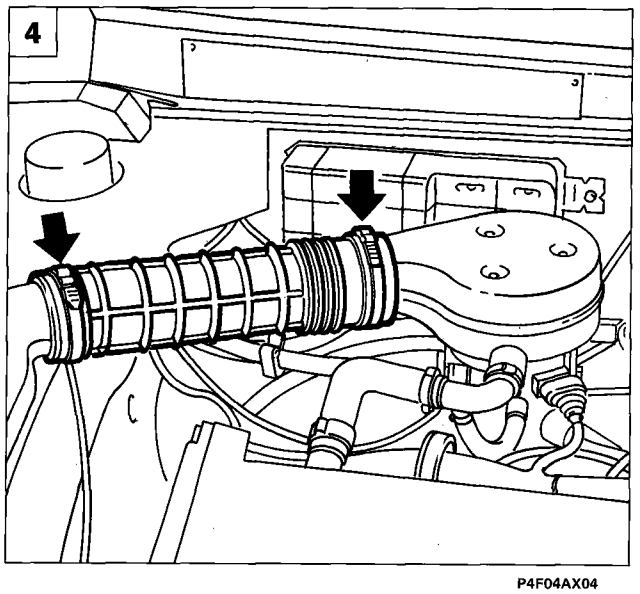

P4F04AX04

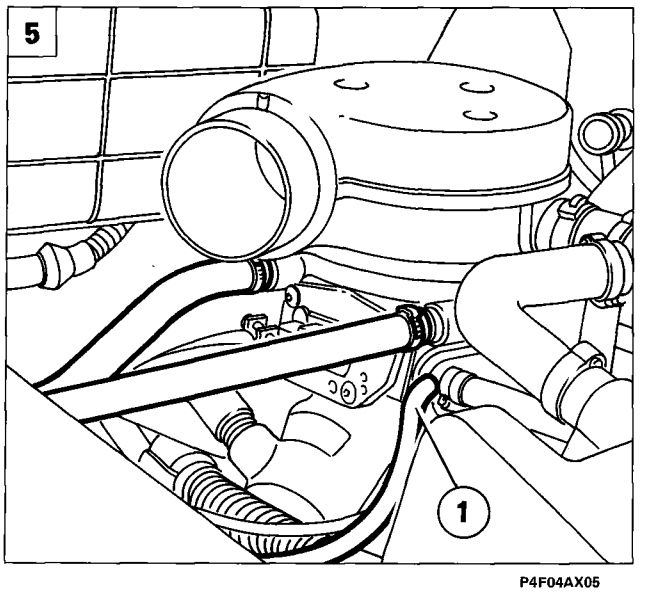

P4F04AX05

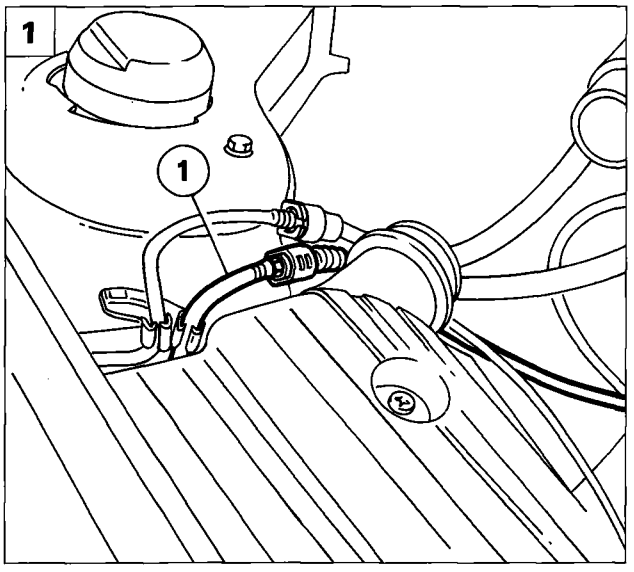

P4F05AX01

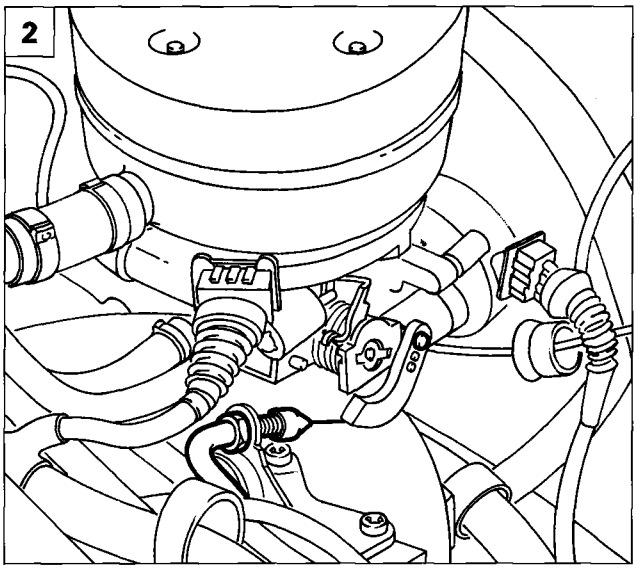

P4F05AX02

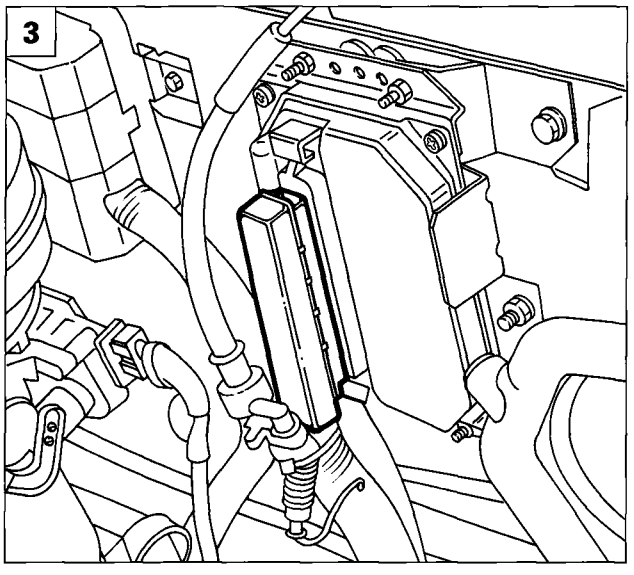

P4F05AX03

1. Disconnect fuel vapour recovery pipe (1).
2. Disconnect accelerator cable from butterfly valve case.
3. Disconnect connector shown in figure from i.e. ECU.
4. Undo screw shown in figure to remove relay carrier bracket cover; then disconnect connectors from relays and power module.
5. Lift the vehicle, arrange a suitable component underneath and then undo the cap shown in the figure to drain the gear oil.

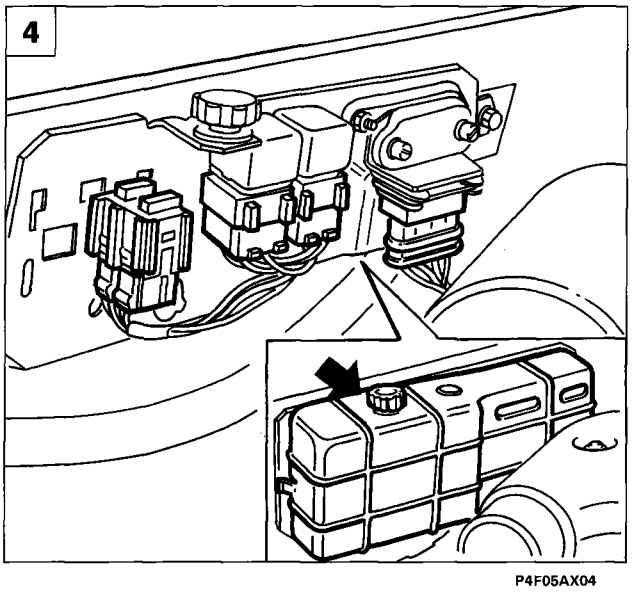

P4F05AX04

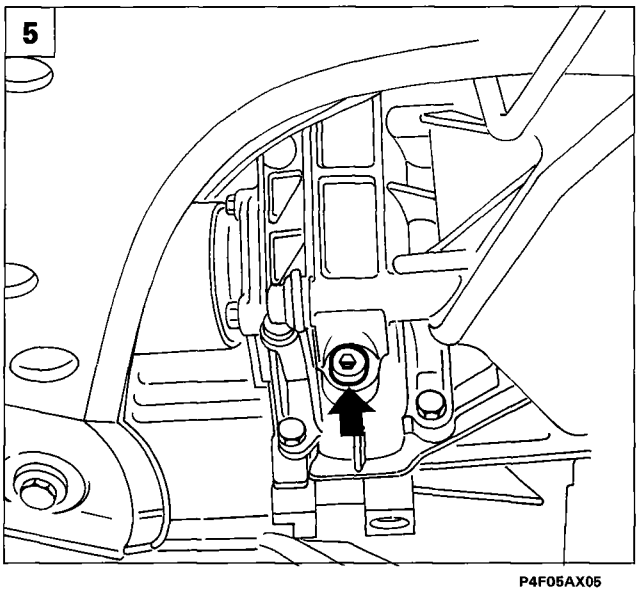

P4F05AX05

10.

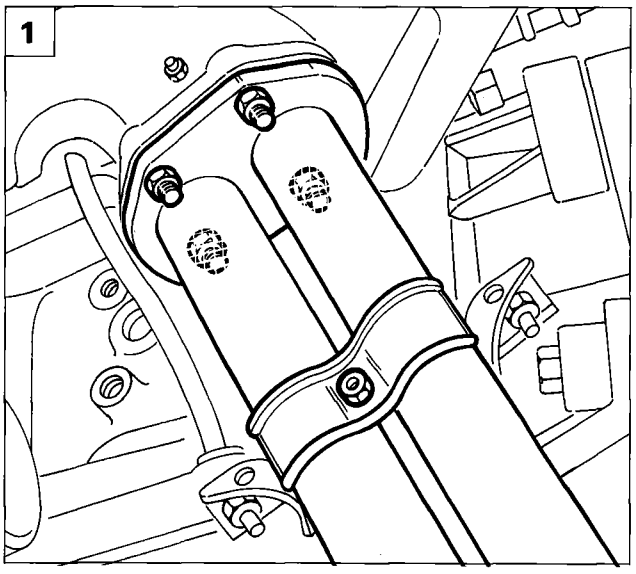

P4F06AX01

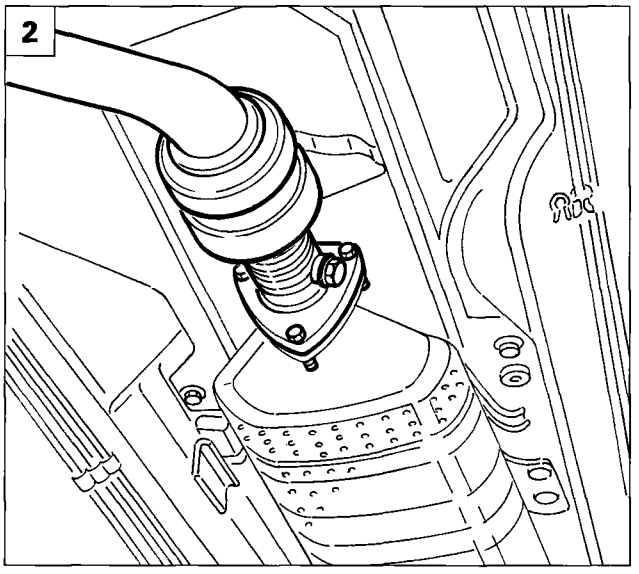

P4F06AX02

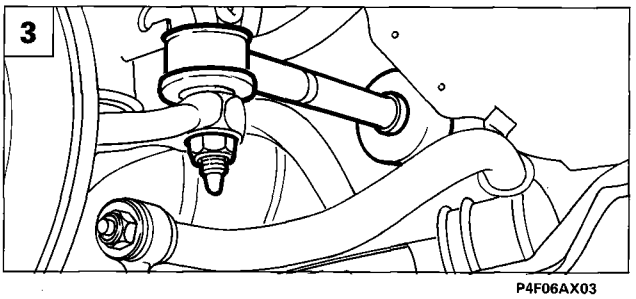

P4F06AX03

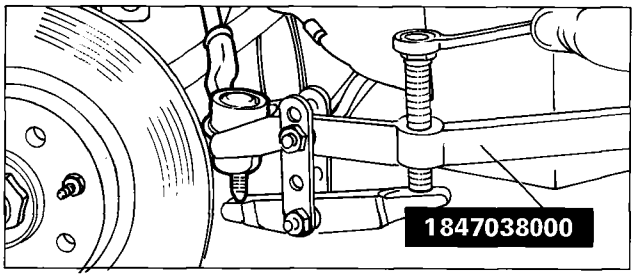

P4F06AX04

1. Remove nuts retaining first exhaust pipe section to manifold.
2. Unscrew the bolts fastening first exhaust pipe section to catalytic converter, disconnect the lambda probe connector and then remove the piping.
3. Remove the nut retaining the steering link head to the pillar (gearbox end), then remove the head using extractor 1847038000.
4. Remove the bolts retaining the damper to the pillar (gearbox end), then turn pillar forward to release brake pipes from fastenings on damper.
5. Remove plastic guard shown in figure from right wheel arch by undoing screws (1) and retaining stud (2). Then disconnect steering link head from pillar and bolts retaining damper to pillar (timing end), as described for gearbox end.

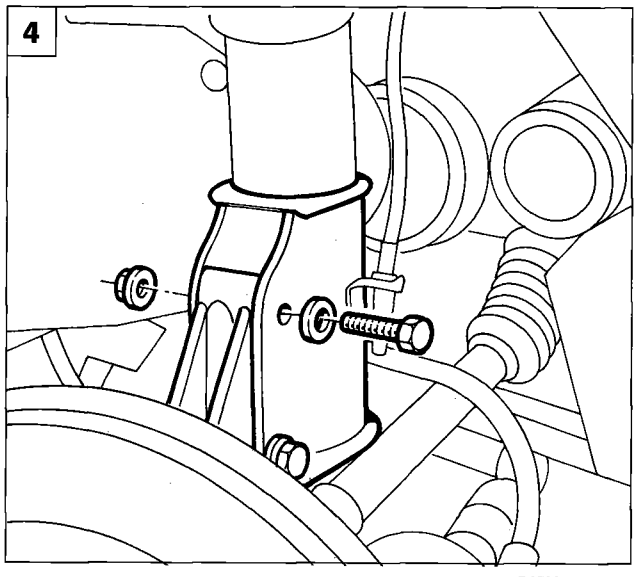

P4F06AX05

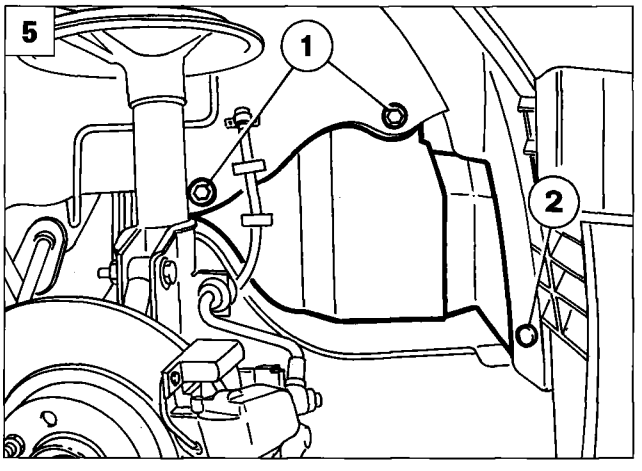

P4F06AX06

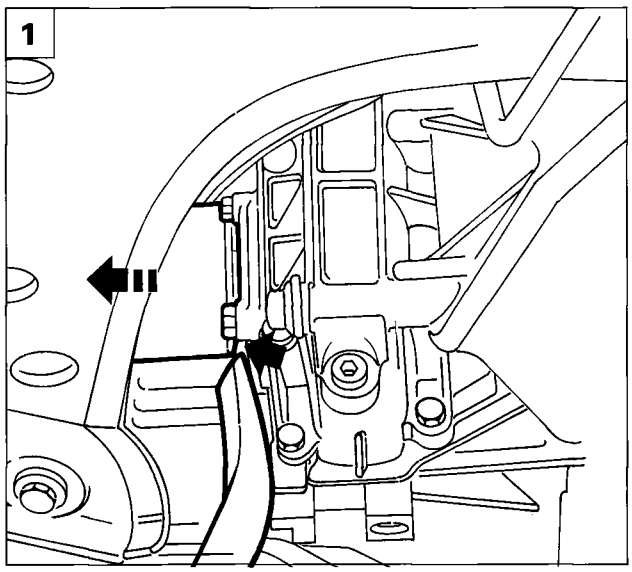

P4F07AX01

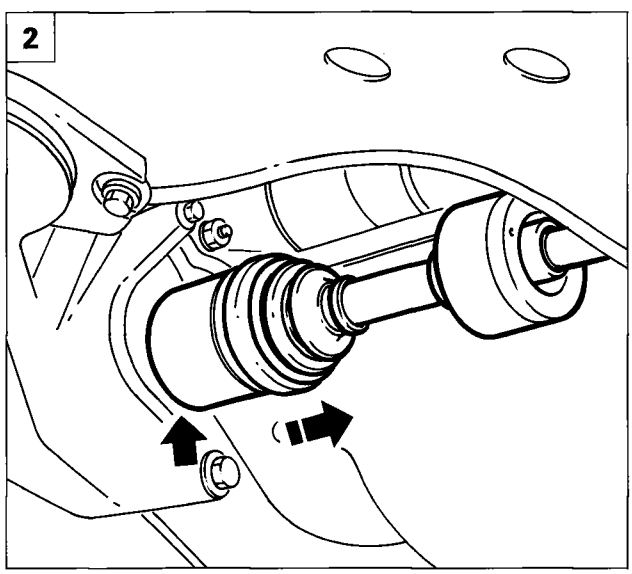

P4F07AX02

1. Disconnect the gearbox end half-axle from the differential by applying leverage to the fitting point. Then move half-axle out of working area.
2. Disconnect timing end half-axle by applying leverage to fitting point. Then move half-axle out of working area.
3. Position power unit support tool 1860860000 on hydraulic jack and secure to power unit at points shown in box using tools 1860859000 and adaptor 1860859001. To position adaptor 1860859001 remove gearbox retaining screw (1).

The hydraulic jack should have a capacity of at least 1000 kg and be high enough to allow the power unit to be taken out from below. For this purpose, note maximum possible lift height and minimum possible jack height.

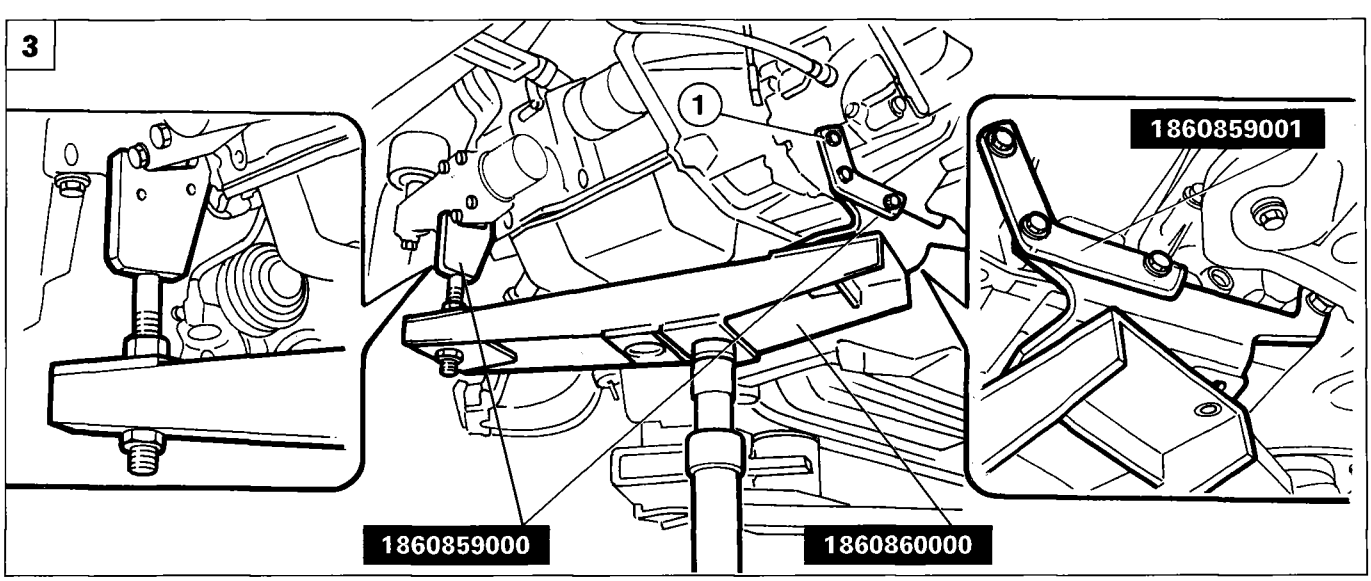

P4F07AX03

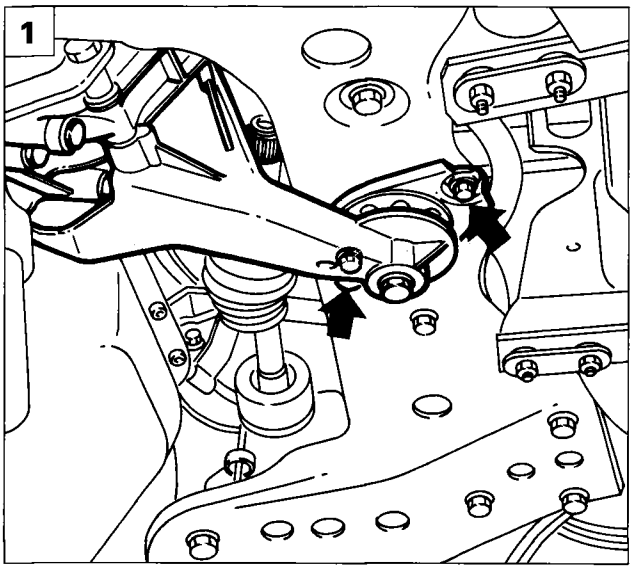

P4F08AX01

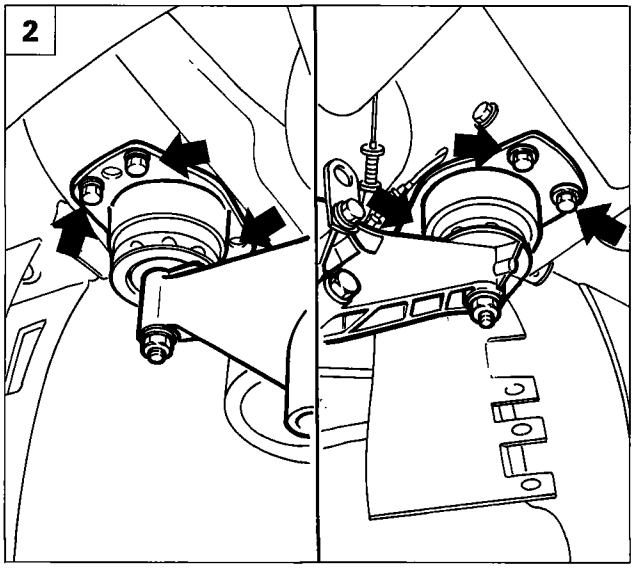

P4F08AX02

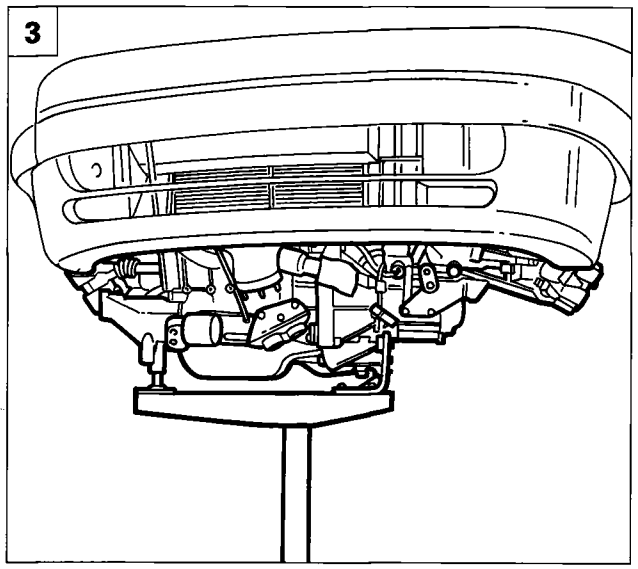

P4F08AX03

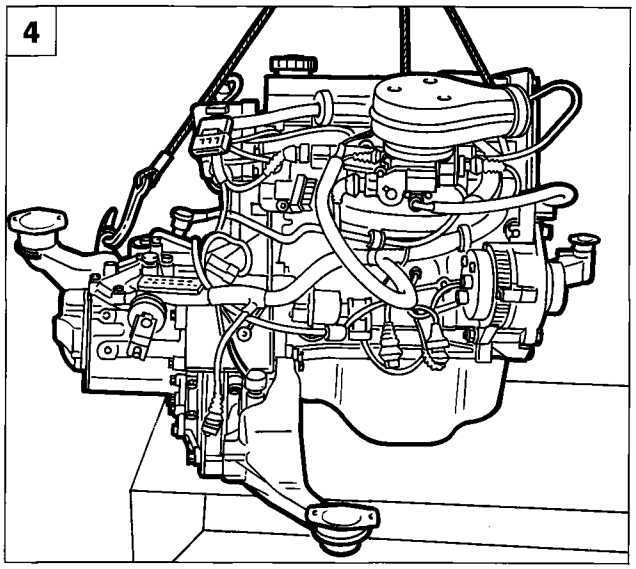

P4F08AX04

1. Remove the bolt retaining the central power unit mount to the front beam.
2. Remove the nuts retaining the side power unit mounts to the body.
3. Lower the hydraulic jack and remove the power unit from below the vehicle.

Lower the hydraulic jack gradually and check the power unit is properly positioned and balanced on the mount.

4. Position the power unit on a platform using a hydraulic lift.

Do not move the power unit installed on the hydraulic jack. To move the power unit, use a hydraulic jack fitted with tool 1860592000 after releasing from support tool.

NOTE *To refit the power unit, reverse the removal instructions.*

- *Prepare the engine bay to refit the power unit. Take care to reconnect all electrical leads, pipes etc. in order to avoid any possible hitches;*
- *Take great care not to damage individual components when the power unit is fitted*
- *When fitting the coolant lines, align groove on rubber hose with ridge on associated rigid sleeve. When filling the cooling system, refer to section on "Removing-refitting radiator".*

First secure engine end mount by tightening retaining bolts to the body by the specified torque. Then secure gearbox end mount and lastly the central differential end mount. Ensure that the power unit mounting points are properly secured.

Clutch pedal height

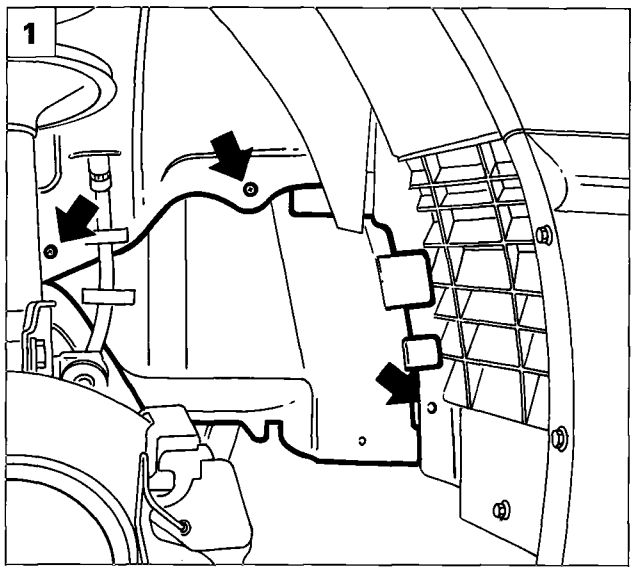

P4F10AX01

REMOVING - REFITTING AUXILIARY BELT

Position the vehicle on a lift, disconnect the battery negative terminal, remove the right front wheel and then proceed as follows:

1. Remove the right front wheel arch lining in order to gain access to the auxiliary component drive belt.

Check the condition and efficiency of the auxiliary component drive belt. In particular, check for cracks, tears, surface wear (smooth or shiny in appearance) and dry or hard parts with consequent loss of grip. Replace belt if even one of the above defects is present.

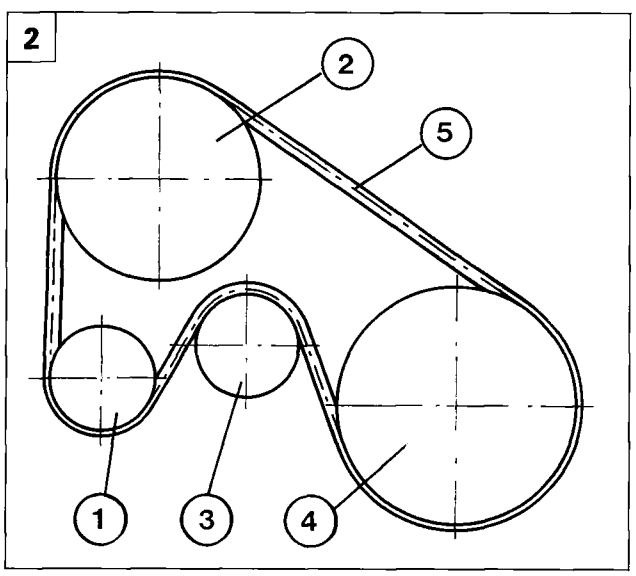

P4F10AX02

2. View of auxiliary component belt fitted on vehicle

   1. Alternator
   2. Power steering
   3. Automatic tensioner
   4. Of crankshaft pulley
   5. Auxiliary component belt

Prevent the belt coming into contact with oil or solvents which could affect the elasticity of the rubber with consequent loss in grip.

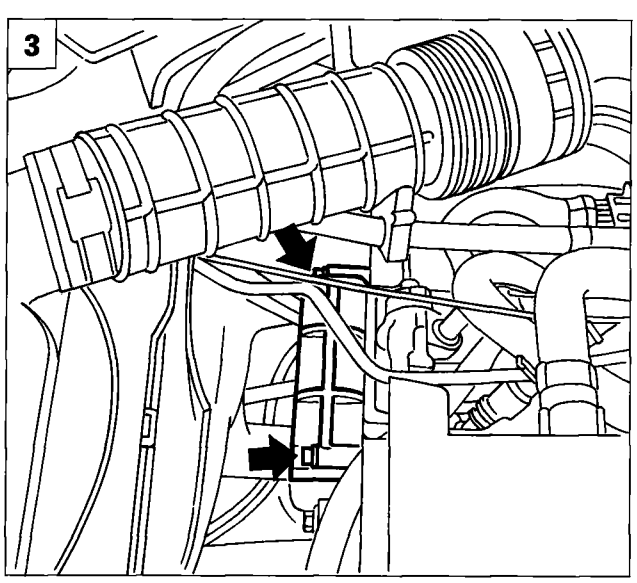

P4F10AX03

3. Remove top power steering pump cover.

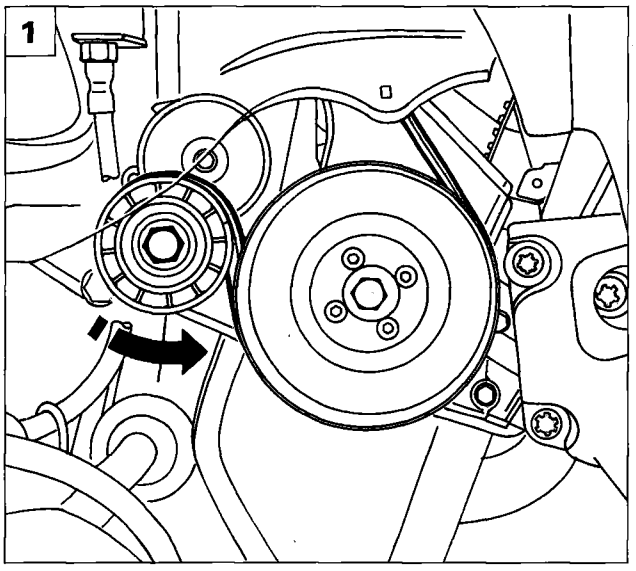

P4F11AX01

1. Slacken belt tension by undoing central automatic tensioner nut in order to unload device internal spring.

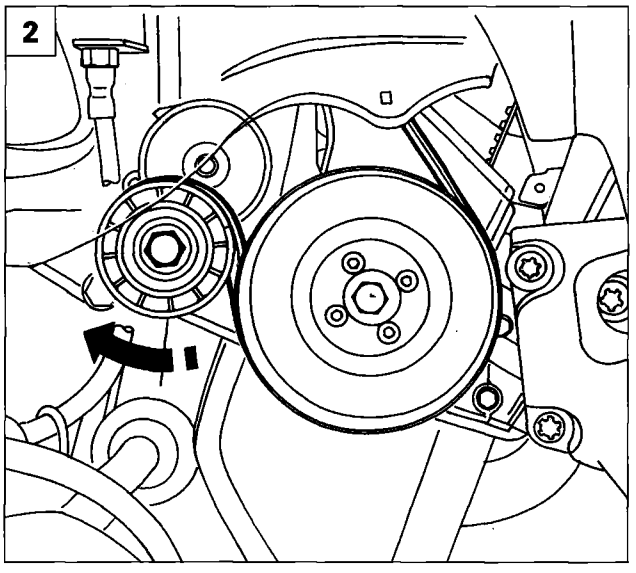

P4F11AX02

Refitting

2. Fit the new belt on the pulleys described previously, then restore belt tension by releasing the automatic tensioner.

The preloaded automatic tensioner spring will ensure correct belt tension once crankshaft has turned through a few revolutions.

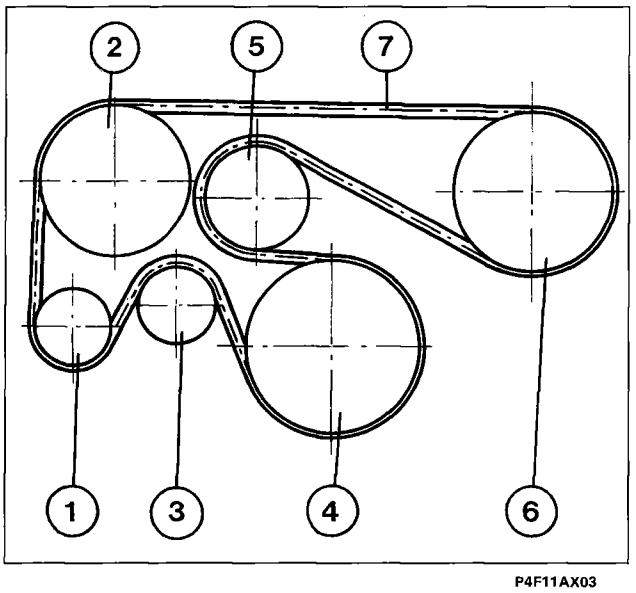

P4F11AX03

AUXILIARY DRIVE BELT FITTED ON VEHICLE FOR AIR CONDITIONED VERSIONS

1. Alternator
2. Power steering
3. Automatic tensioner
4. Of crankshaft pulley
5. Fixed guide pulley
6. Air conditioner compressor pulley
7. Auxiliary component belt

Copyright Fiat Auto

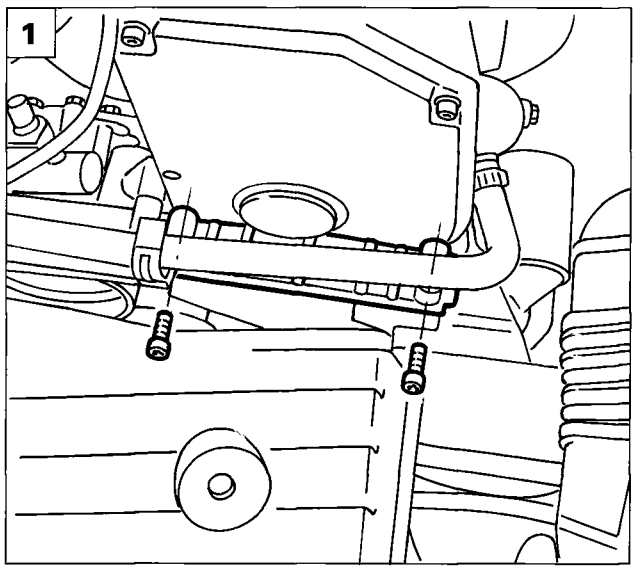

P4F12AX01

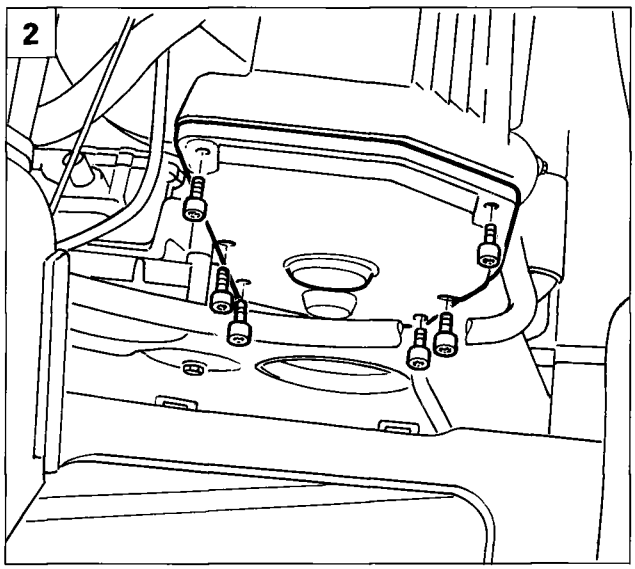

P4F12AX02

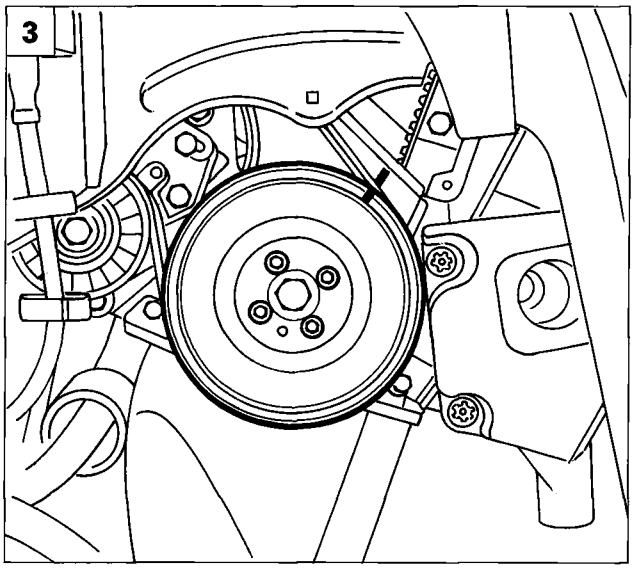

P4F12AX03

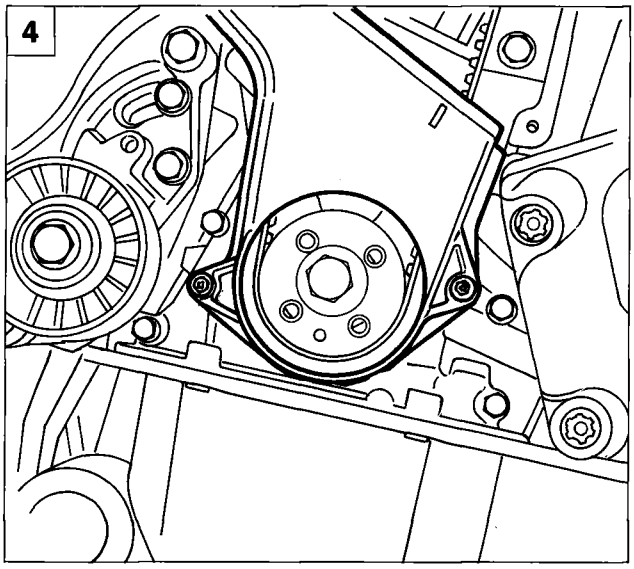

P4F12AX04

REPLACING TIMING BELT

Before removing the timing belt, remove the auxiliary belt as described previously

1. Disconnect the coolant line mount from the top camshaft guard.
2. Disconnect upper timing belt guard.
3. Loosen the auxiliary drive pulley retaining screws, then turn the pulley to the timing position as shown in the figure and remove the pulley by undoing the fastenings.
4. Disconnect the lower timing belt guard.

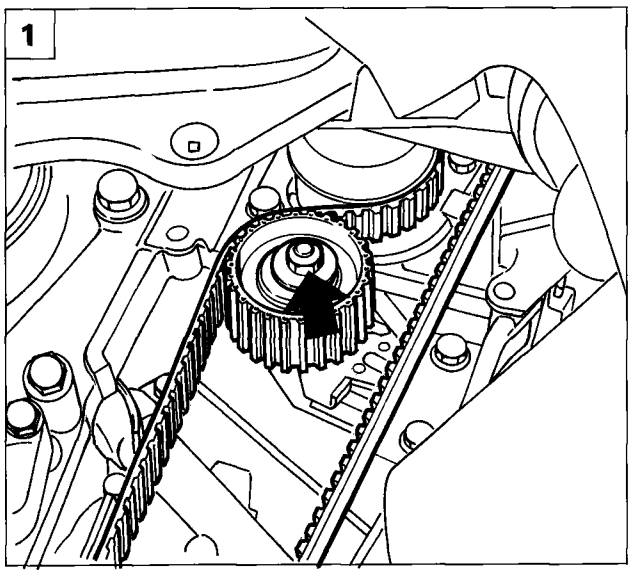

P4F13AX01

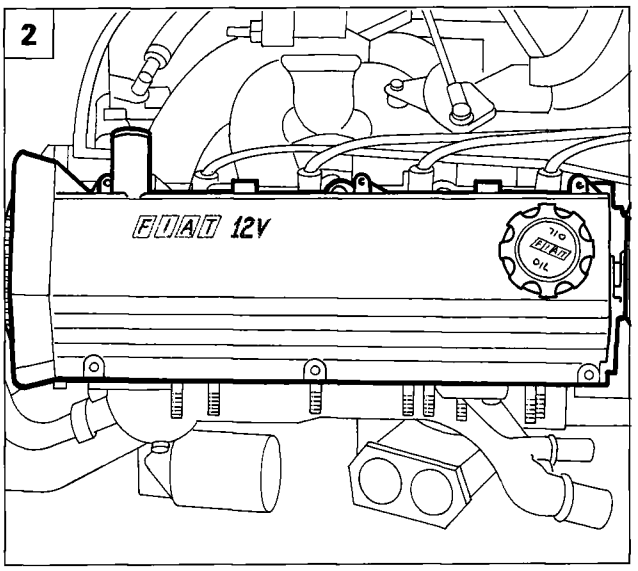

P4F13AX02

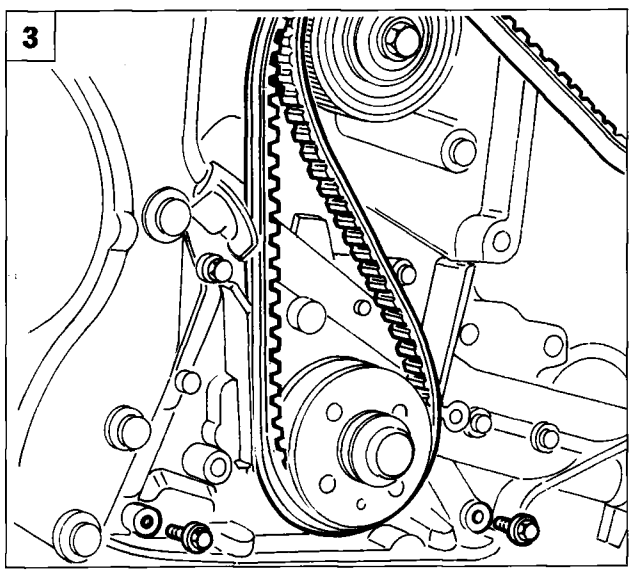

P4F13AX03

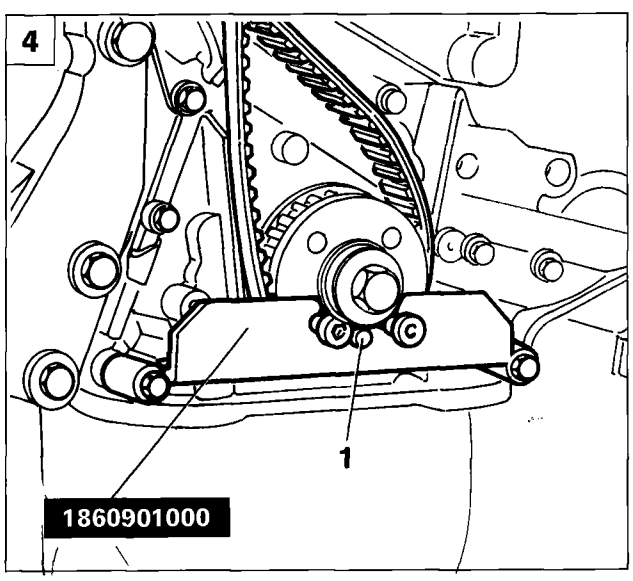

P4F13AX04

1. Loosen the automatic tensioner screw to release belt tension and then remove the belt.

Fitting timing belt

2. Remove the cam cover.

3. Loosen the camshaft pulley retaining bolt using tool 1860831000. Fit the toothed belt on the crankshaft gear and remove the two bolts shown, which retain the oil pump to the crankcase.

4. Position tool 1860901000 and ensure hole (1) of the tool is aligned with the dowel on the crankshaft gear. The 1st cylinder is at TDC in this position.

Copyright Fiat Auto

10.

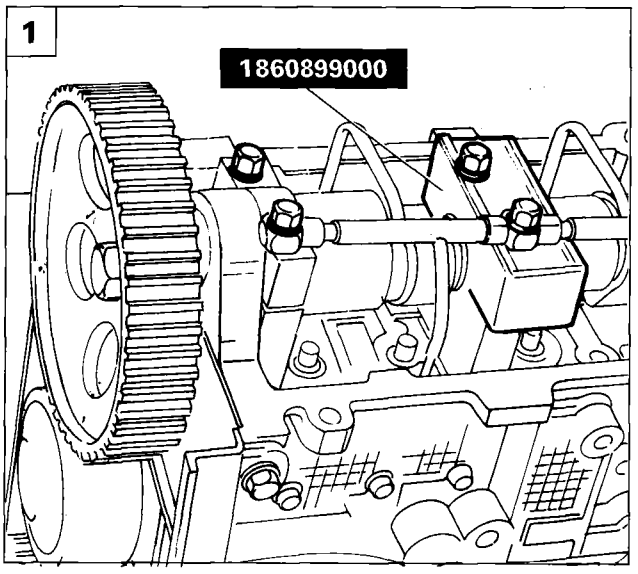

P4F14AX01

1. Remove bolts retaining 1st - 2nd - 3rd - 4th cap on the exhaust side. Loosen the intake side bolts, lift the lubrication duct, remove the 2nd cap and replace with timing adjustment tool 1860899000. Then tighten all caps provisionally to a torque of 1 daNm.

Take care to avoid deforming or breaking the lubrication duct when raising.

2. Finish fitting the toothed belt as follows:

- Crankshaft drive pulley (1)
- Timing pulley (2)
- Coolant pump (3)
- Automatic tensioner (4)

NOTE *Take care not to kink the belt when fitting because this could damage the belt material. Fit the belt so that the arrow on the belt points in the direction of engine rotation.*

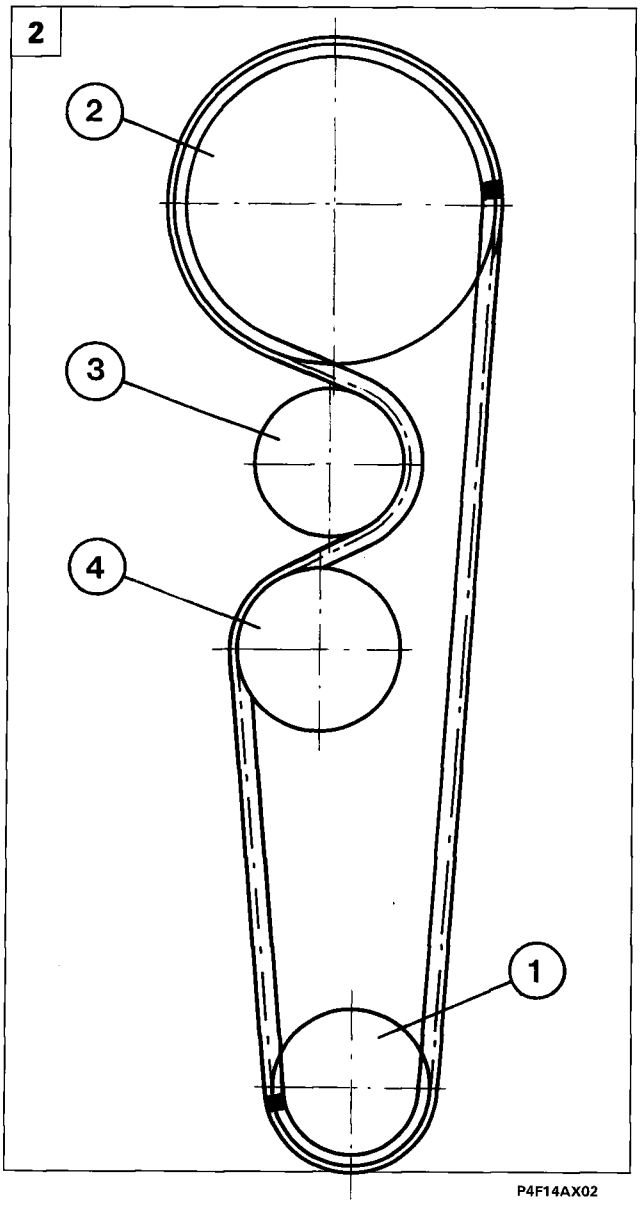

P4F14AX02

Tensioning timing belt

3. Use tool 1860443000 to exert a force at the point indicated by the arrow and move mobile indicator (1) on the belt tensioner to the position of maximum tension, then tighten tensioner retaining nut.

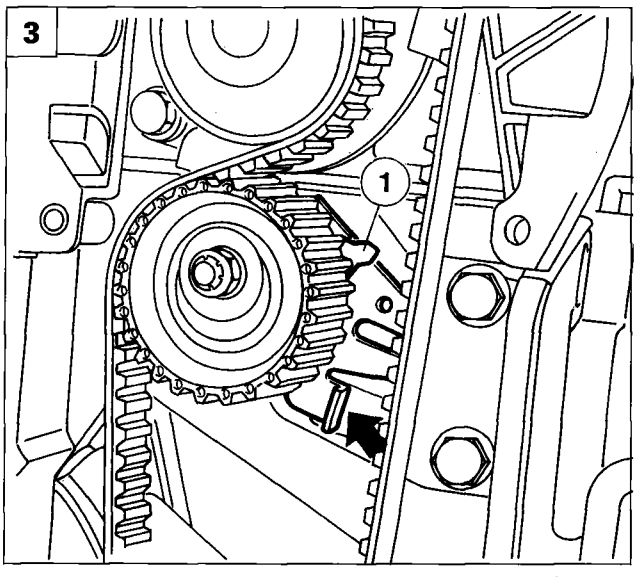

P4F14AX03

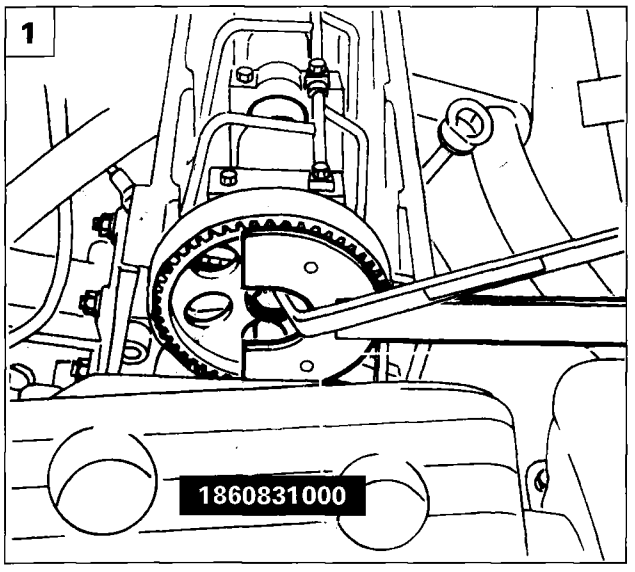

P4F15AX01

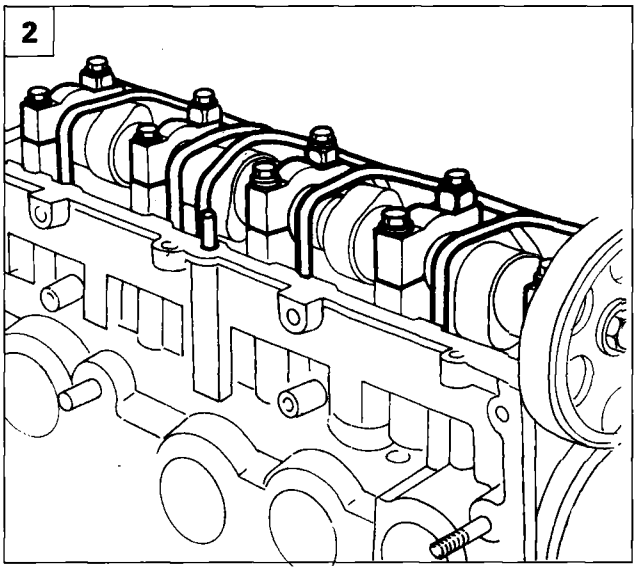

P4F15AX02

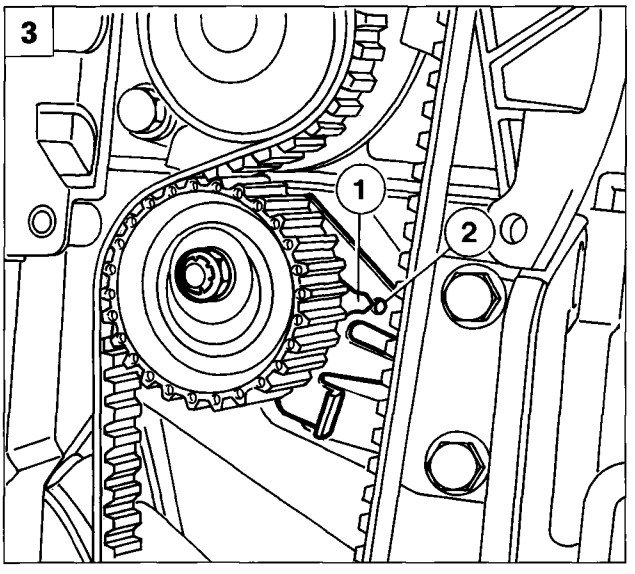

P4F15AX03

1. Tighten the pulley retaining bolt to the specified torque.
2. Remove tool 1860899000 and refit the 2nd cap in place.
   To carry out this operation, firstly remove retaining bolts of 1st- 2nd- 3rd and 4th cap on the exhaust side and loosen the intake side bolts. Slightly raise the lubrication duct, withdraw the tool and position the cap. Tighten all cap retaining bolts to the specied torque.

Take care to avoid deforming or breaking the lubrication duct during duct removal.

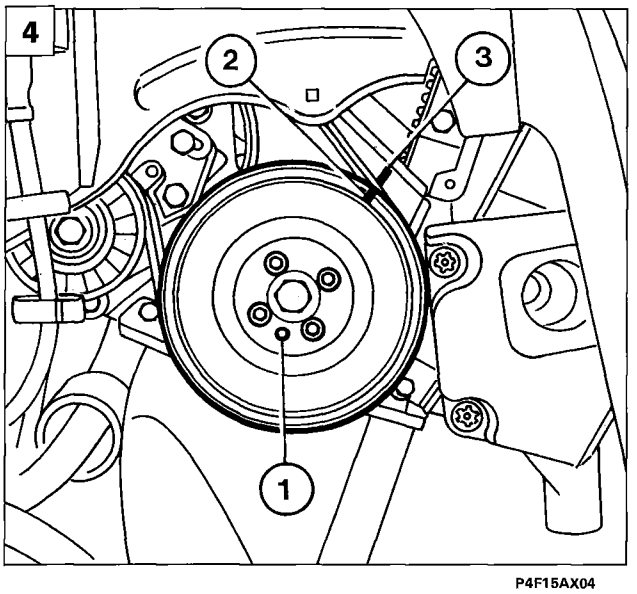

P4F15AX04

3. Remove tool 1860901000 previously positioned on the camshaft gear and turn the cranskshaft through two turns in its direction of rotation. Loosen the tensioner retaining nut and align mobile indicator (1) with the fixed reference (2). Then lock and tighten the tensioner retaining nut to the specified torque.
4. Refit the parts removed previously, taking care to refit crankshaft auxiliary drive pulley by positioning hole on pulley over dowel (1) on crankshaft pinion. Then check engine timing again and check that notch (2) on pulley is aligned with detent (3) on timing belt cover.

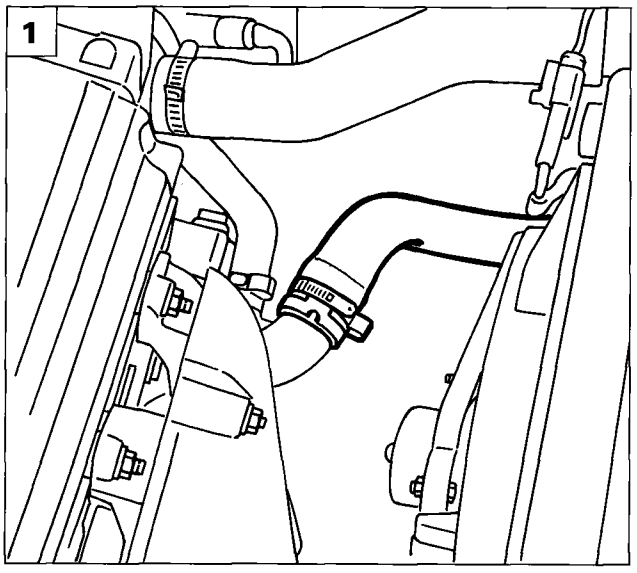

P4F16AX01

REPLACING COOLANT PUMP

Before removing the coolant pump, remove the auxiliary drive belt and timing belt as described previously

1. Drain the coolant pump by loosening the clip indicated and collecting the fluid in a suitable container for recovery.

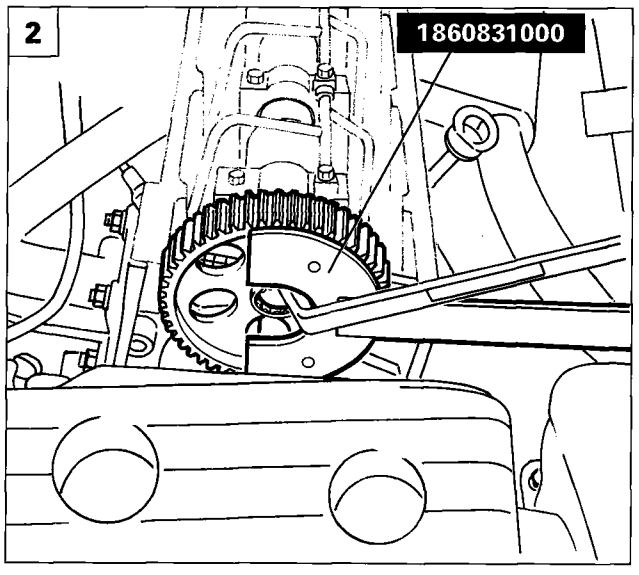

P4F16AX02

2. Use wrench 1860831000 to lock timing pulley, unscrew retaining screw and remove.

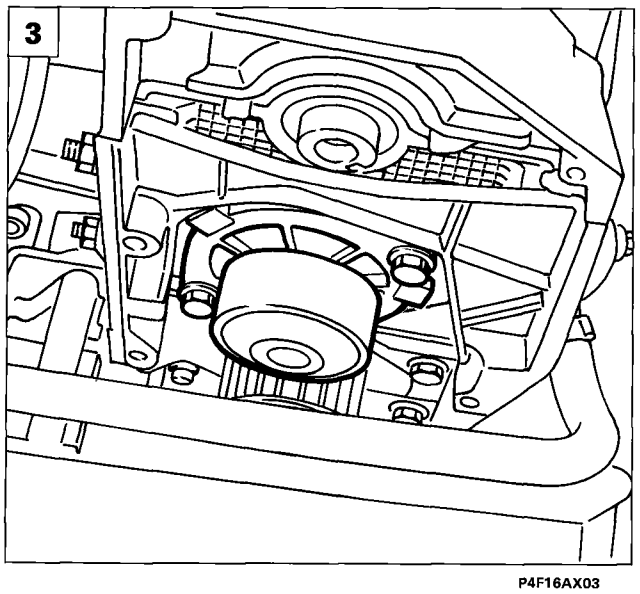

P4F16AX03

3. Remove coolant pump from cylinder head.

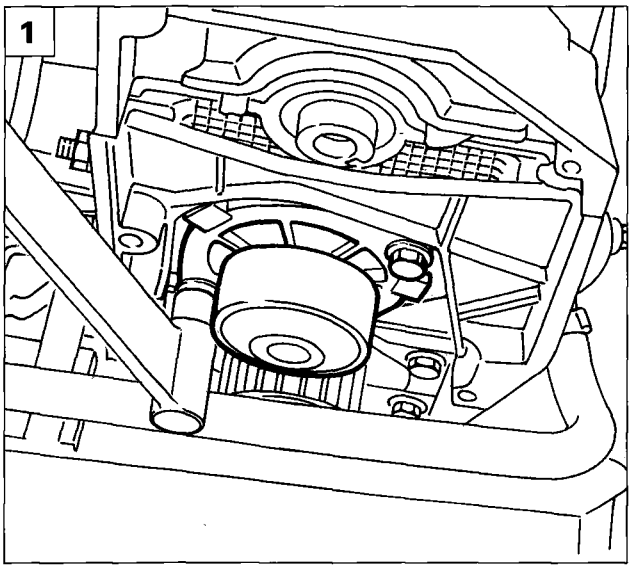

P4F17AX01

Refitting coolant pump

1. Reposition pump in its seat and tighten retaining screws to the specified torque.

Replace pump O-rings before refitting.

Refit the parts removed previously by reversing the removal procedure. Tension the timing and auxiliary belts as described previously.

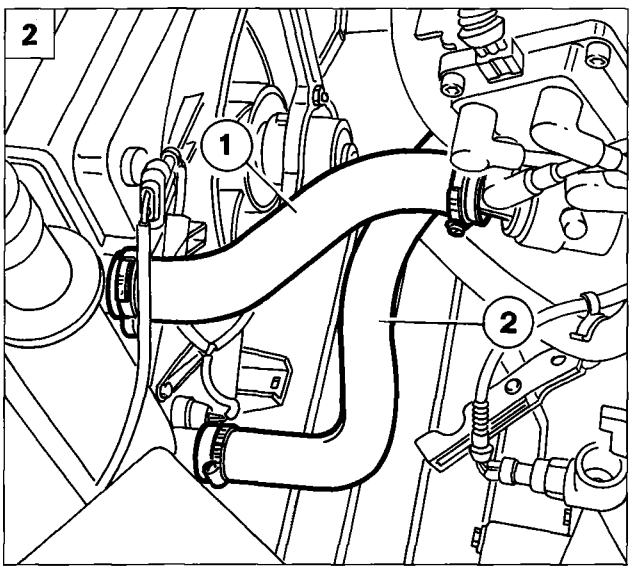

P4F17AX02

REMOVING - REFITTING CYLINDER HEAD

Disconnect battery negative lead, then proceed as follows.

2. Position a container to collect coolant and disconnect sleeve (1) by undoing retaining clip. Disconnect sleeve (2) connected to thermostat.

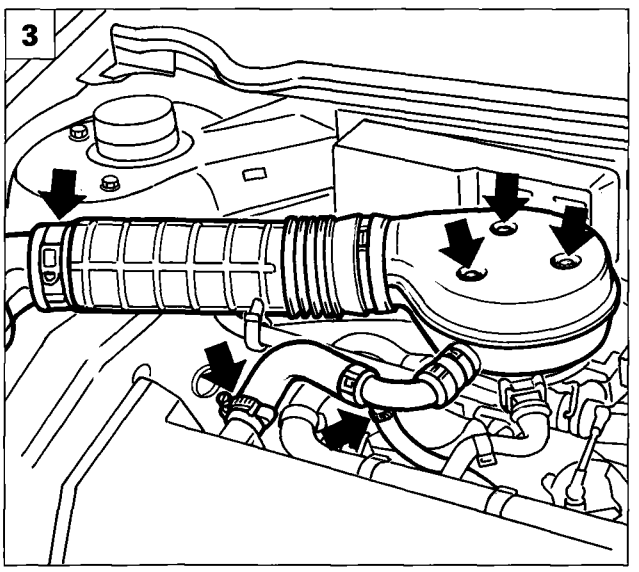

P4F17AX03

3. Remove air shroud to butterfly valve case at points indicated.

10.

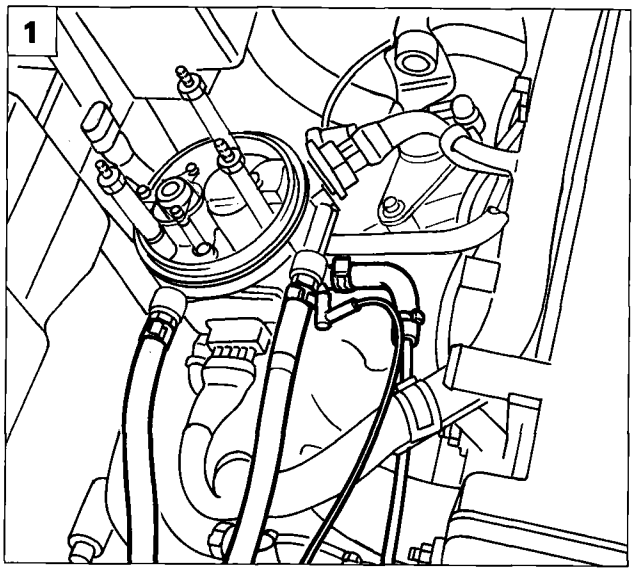

P4F18AX01

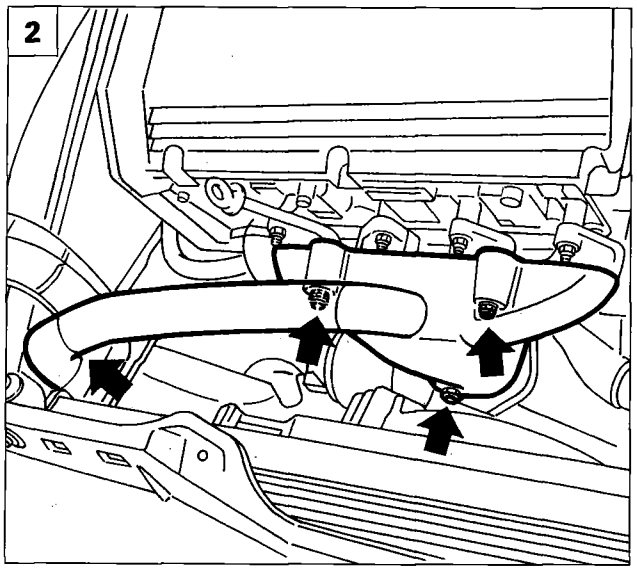

P4F18AX02

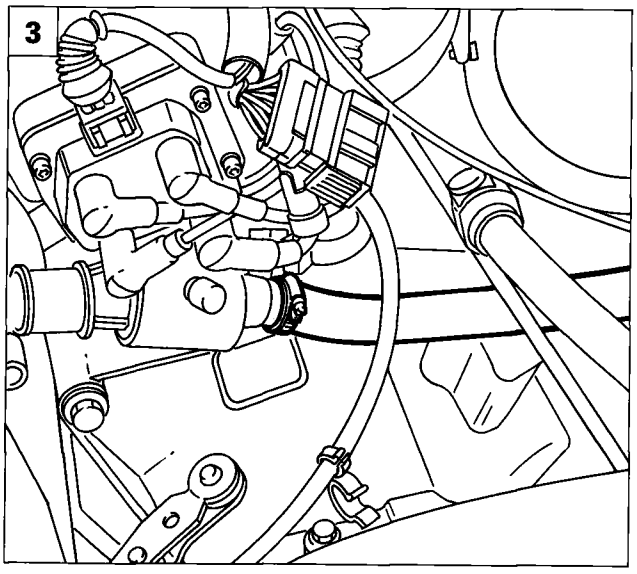

P4F18AX03

1. Disconnect fuel and evaporation control system lines.
2. Disconnect heat shield with warm air intake lines from exhaust manifold.
3. Disconnect coolant line from thermostat.
4. Disconnect accelerator cable from point indicated, then withdraw from seat.
5. Disconnect connections shown.

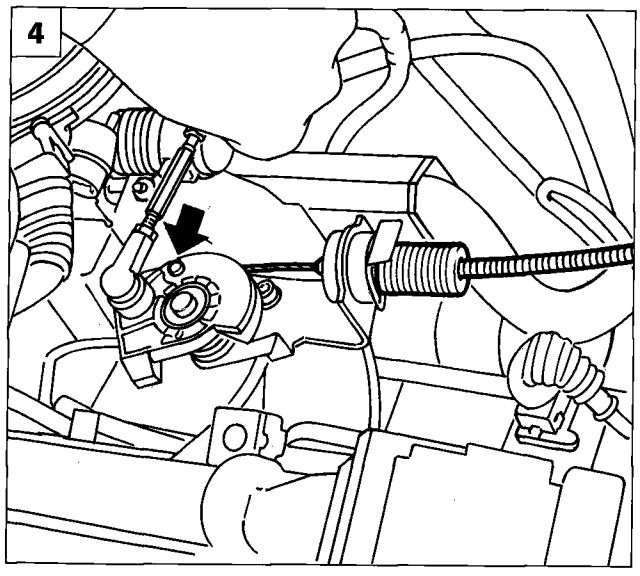

P4F18AX04

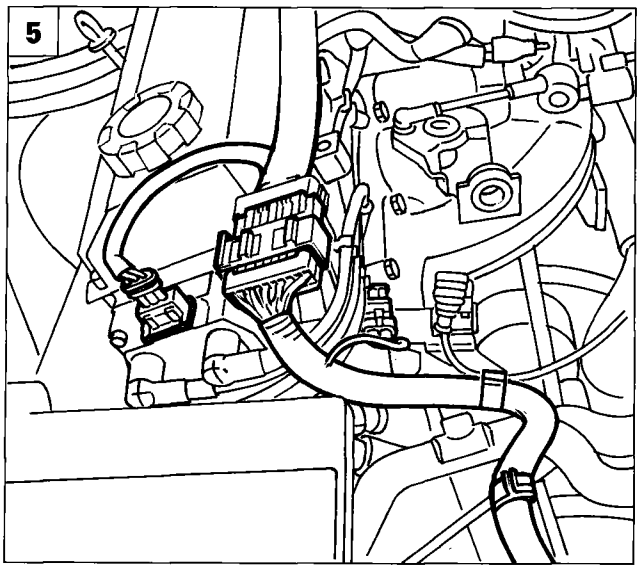

P4F18AX05

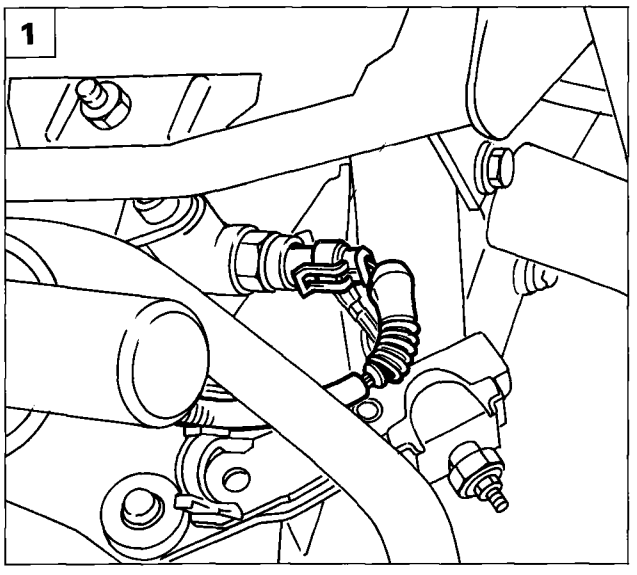

P4A19AX01

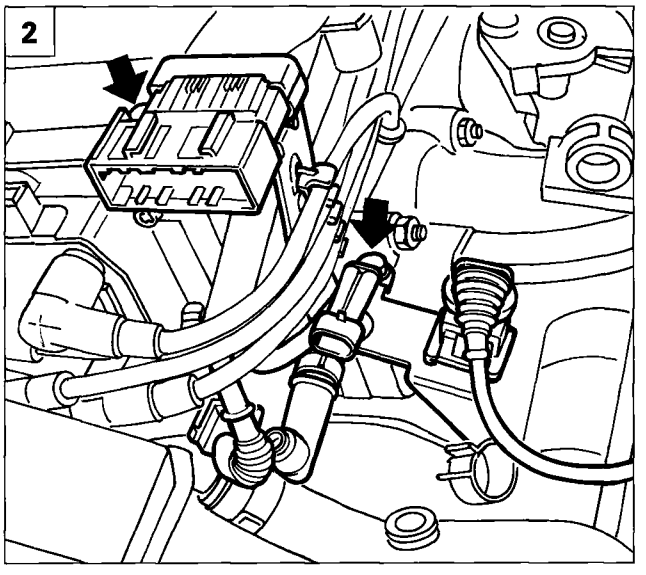

P4A19AX02

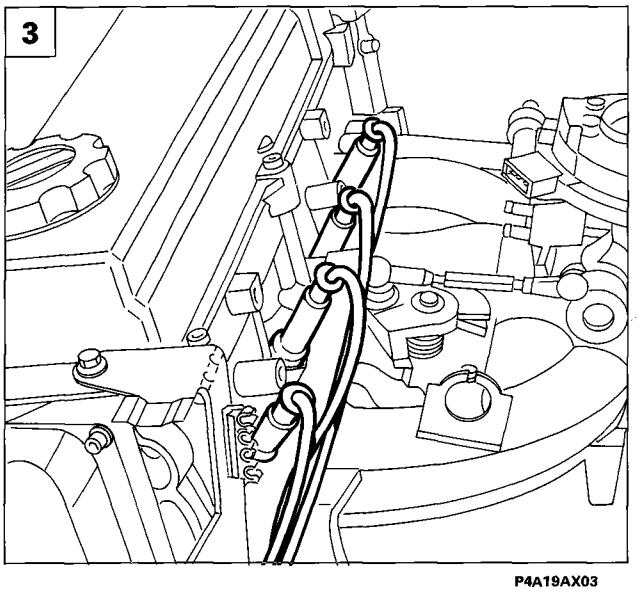

P4A19AX03

1. Disconnect reversing light switch connector.
2. Disconnect electrical connections from thermostat and unscrew screws fastening wiring bracket.
3. Disconnect spark plug leads and then move wiring bracket out of working area.
4. Disconnect connections shown located on injector turret.
5. Remove wiring channel and engine earth from their seats.

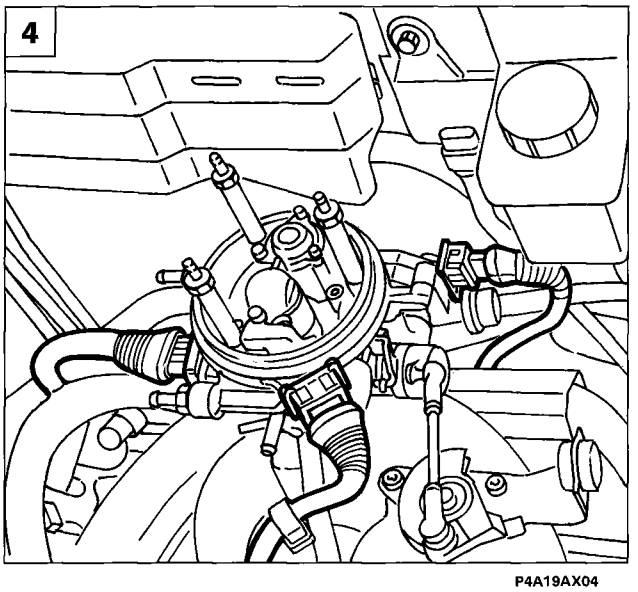

P4A19AX04

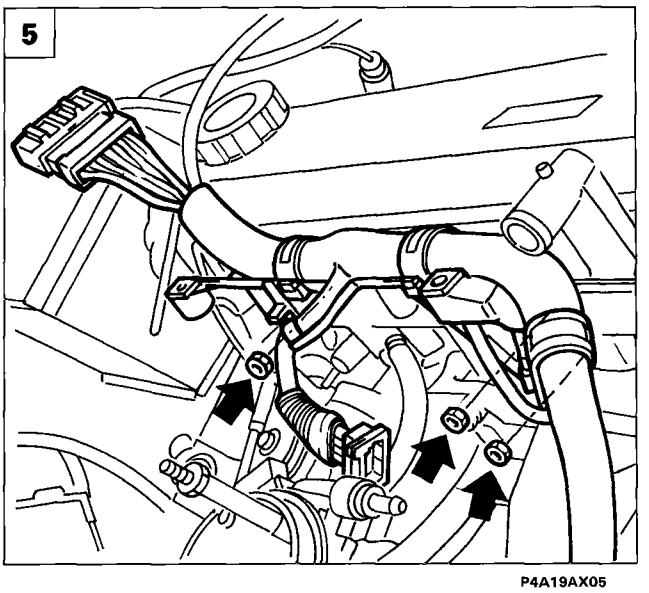

P4A19AX05

Copyright Fiat Auto

10.

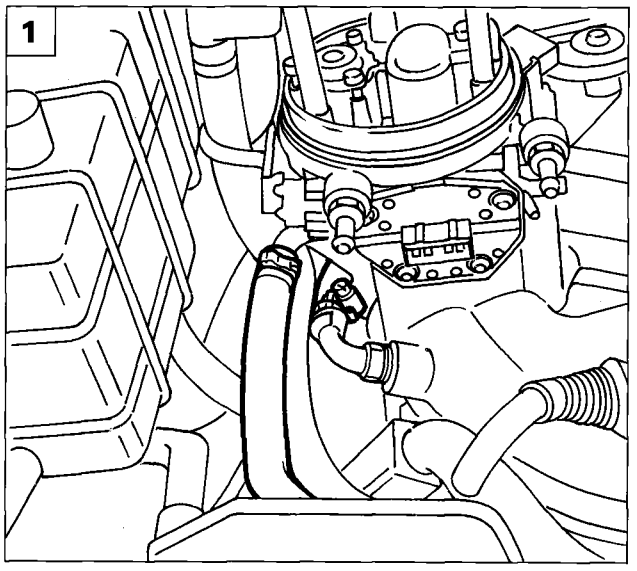

P4F20AX01

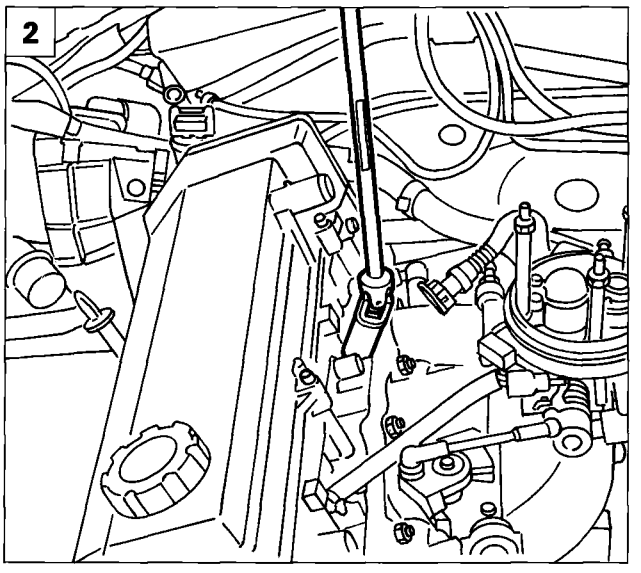

P4F20AX02

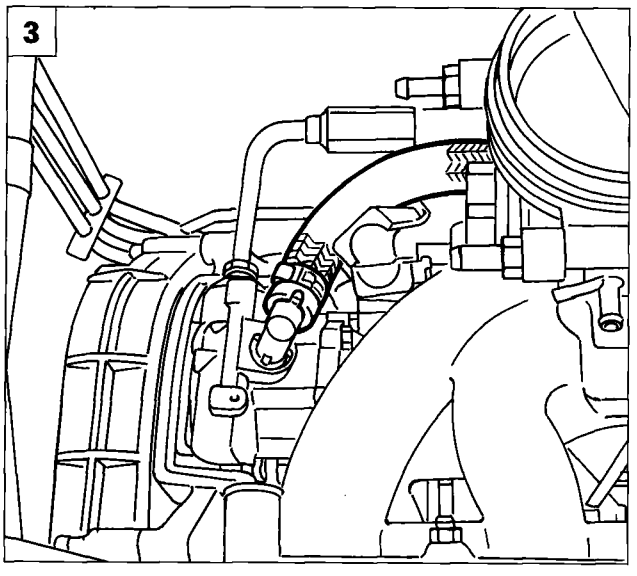

P4F20AX03

1. Disconnect coolant line from butterfly valve case and brake servo vacuum pipe.
2. Disconnect spark plugs.
3. Disconnect oil line from power steering so that engine electrical wiring can be removed more easily from the working area.
4. Move engine wiring out of the way by opening the channel shown by hand and placing outside working area.
5. Disconnect coolant line from thermostat.

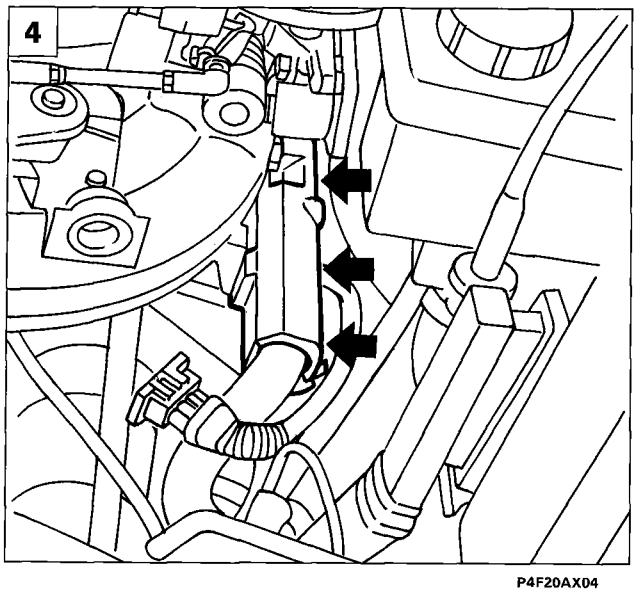

P4F20AX04

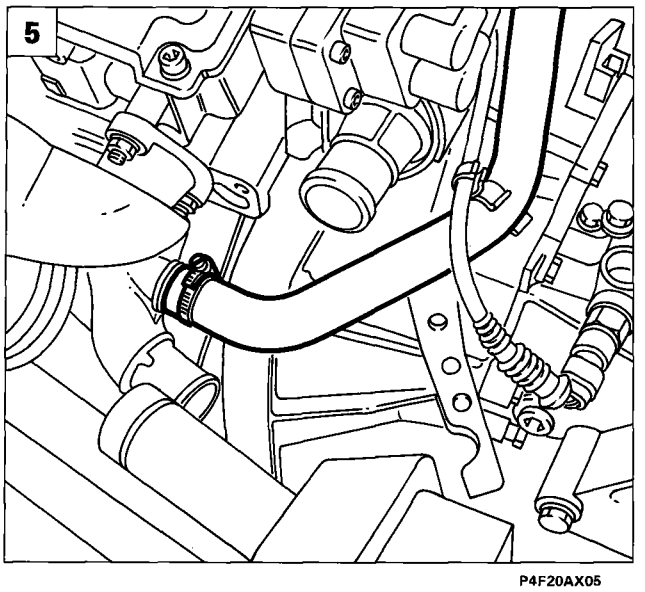

P4F20AX05

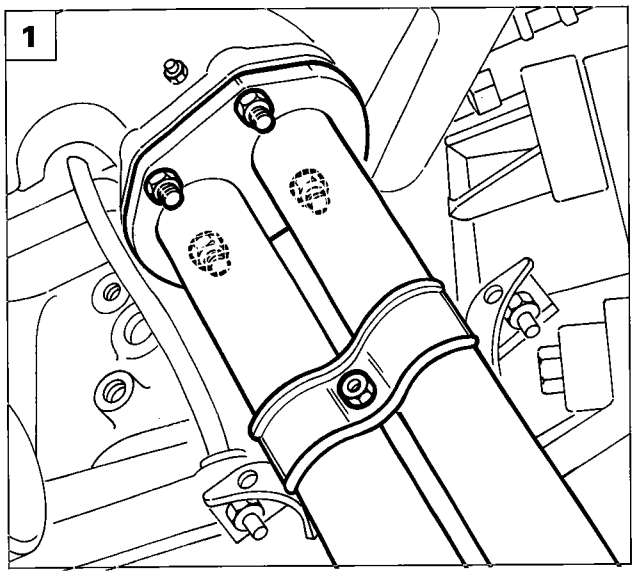

P4F21AX01

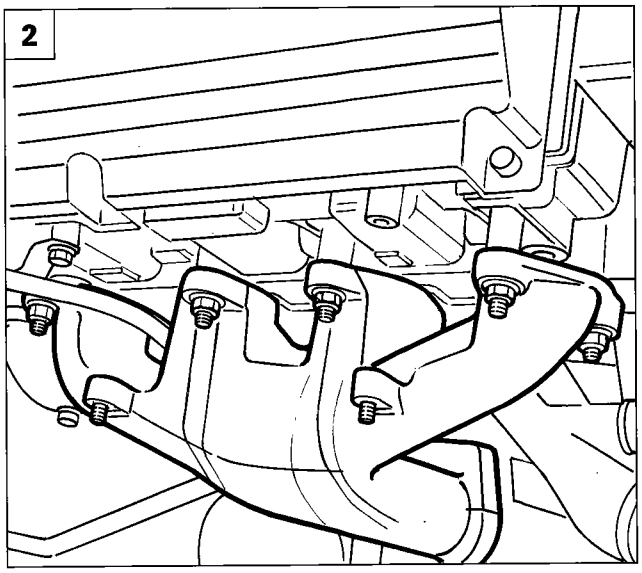

P4F21AX02

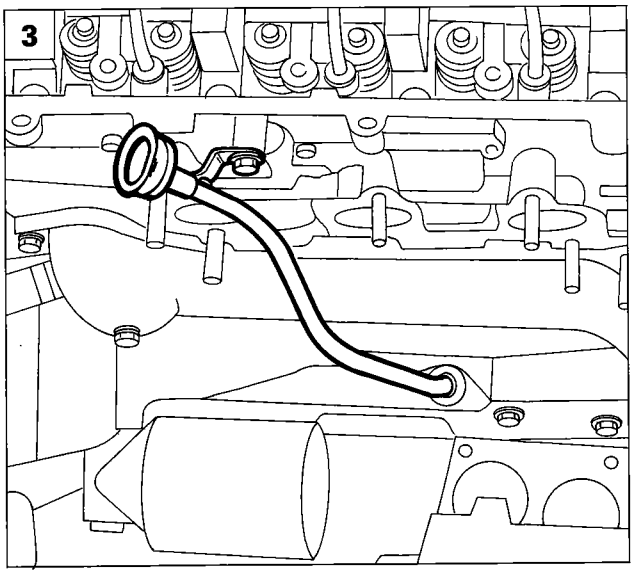

P4F21AX03

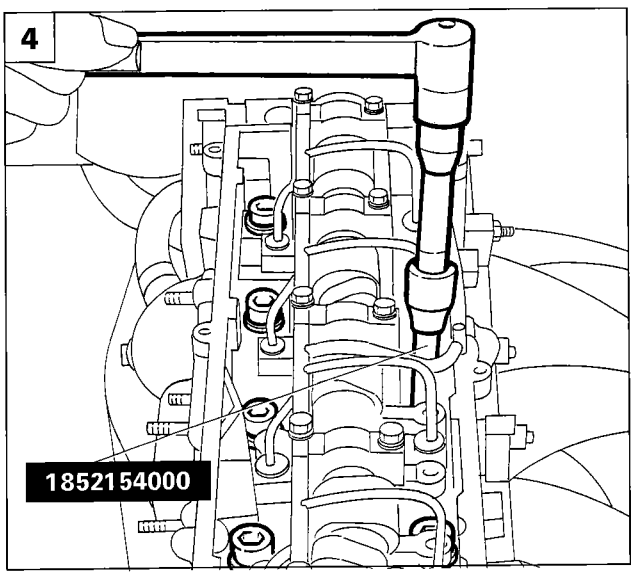

P4F21AX04

1. Disconnect exhaust pipe from fastenings as shown.
2. Disconnect exhaust manifold.

Remove the auxiliary belt and timing belt as described in previous paragraphs, then proceed as follows.

3. Remove oil dipstick.
4. Remove the cylinder head with intake manifold using wrench 1852154000.

Copyright Fiat Auto

10.

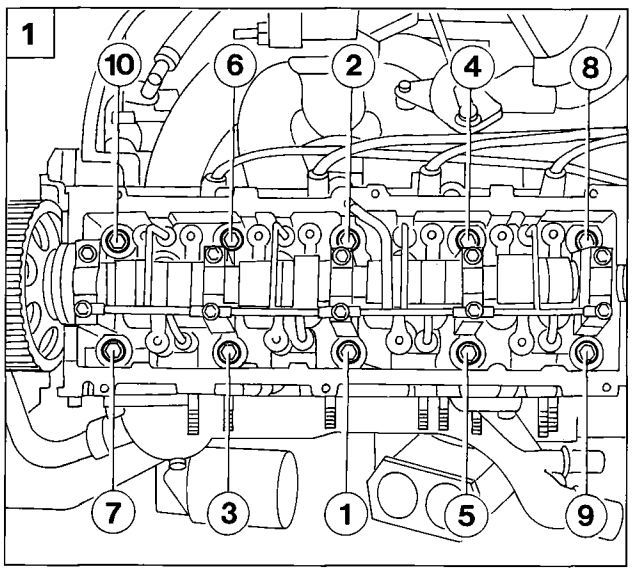

P4F22AX01

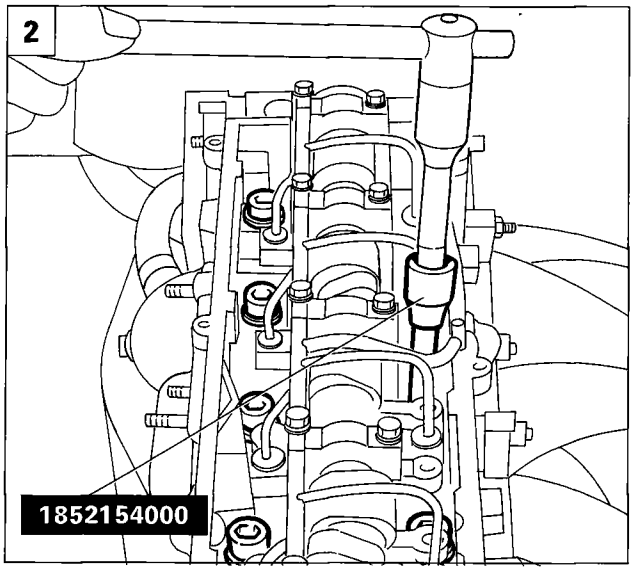

P4F22AX02

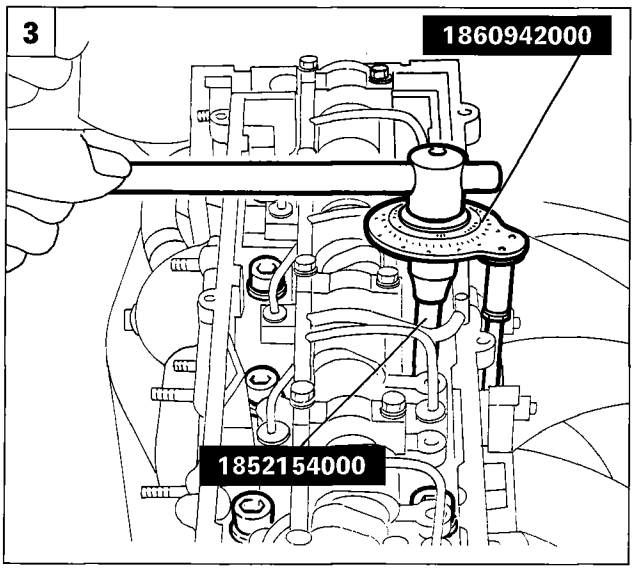

P4F22AX03

Refitting

1. Position cylinder head gasket with the wording "ALTO" facing the operator.The cylinder head gasket fitted in this case is ASTADUR type. This type of gasket is made from a special material which undergoes a process of polymerisation while the engine is running and therefore hardens considerably during use.
   The following precautions must be taken in order to ensure gasket polymerisation occurs:
   - keep the gasket sealed in its plastic bag and take out only shortly before fitting;
   - do not oil the gasket or contaminate with oil. Ensure cylinder head and crankcase surfaces are thoroughly clean.

Then fit the cylinder head and tighten retaining screws to a torque of 2 daNm. Observe the tightening pattern shown in the figure.

2. Use wrench 1852154000 to retighten retaining bolts to a torque of 4 daNm, following the same tightening order described previously.

3. Use wrench 1852154000 with angle wrench 1860942000 to tighten through a further angle of 180° in two different stages(90°+ 90°), following the same tightening pattern.

Refit the remaining parts by reversing disassembly instructions. Fit timing and auxiliary belts and tension as described in the previous paragraphs.

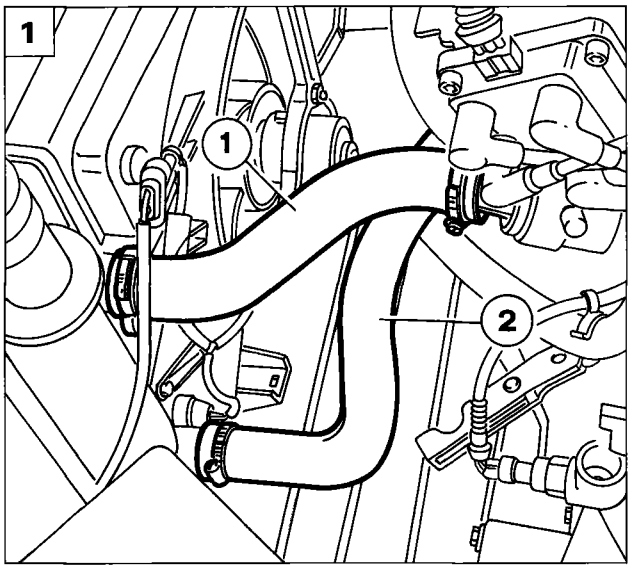

P4F23AX01

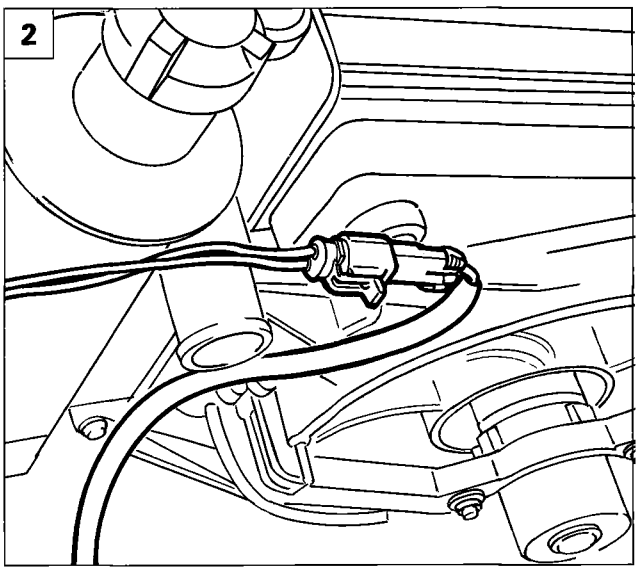

P4F23AX02

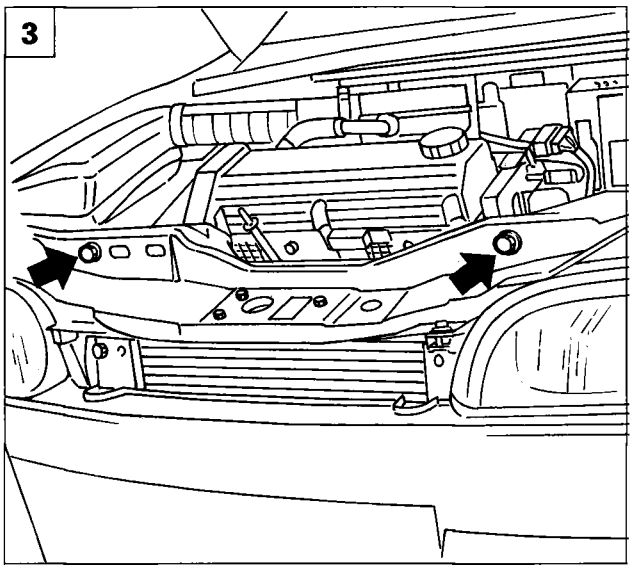

P4F23AX03

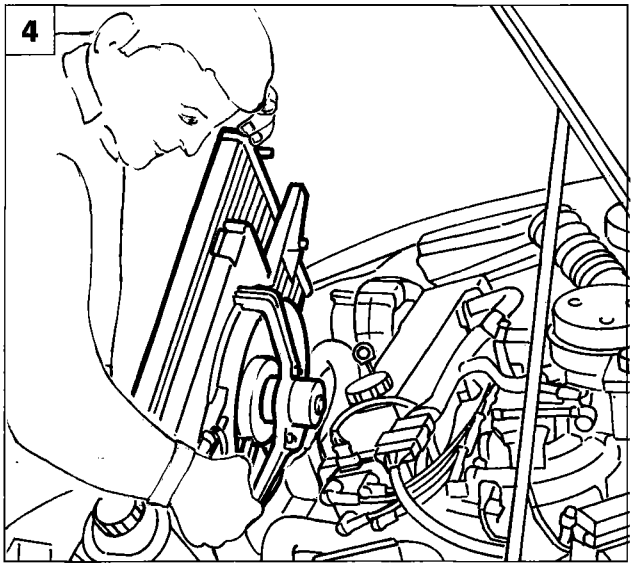

P4F23AX04

REMOVING - REFITTING RADIATOR

1. Position a suitable container to collect the coolant and disconnect sleeve (1) by undoing retaining clip. Disconnect sleeve (2) leading to thermostat.

2. Disconnect electrical connection to fan.

3. Unscrew screws fastening fan-radiator assembly to front beam.

4. Remove the fan-radiator assembly by removing from rubber base.

Removing - refitting radiator

10.

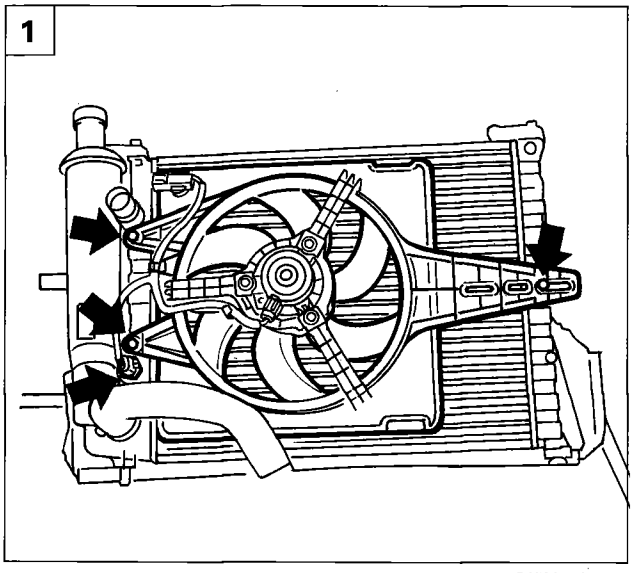

P4F24AX01

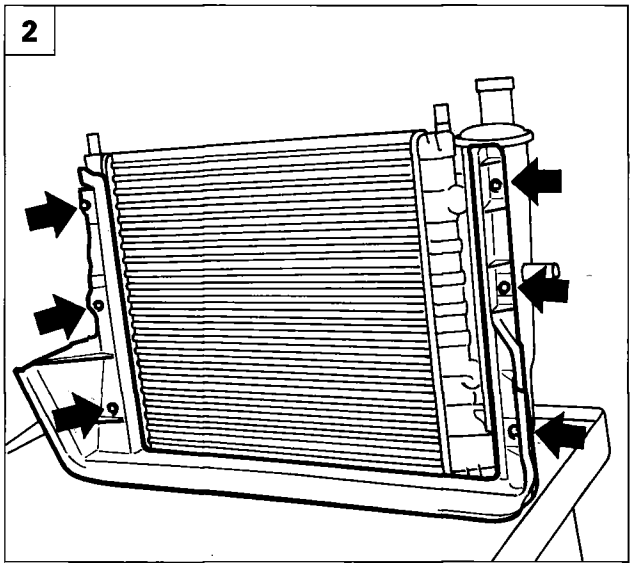

P4F24AX02

With the radiator assembly on the bench, remove the fan by disconnecting the fan thermal activation contact and unscrewing the fastenings shown (fig. 1). Then remove the air shroud (fastenings are shown in fig. 2).

Reverse removal instructions to refit

RADIATOR FILLING PROCEDURE FOR HEATED VERSIONS

- Ensure all cooling system components are completely empty before beginning filling procedure.
- Open the three bleed plugs (A - B - C) shown in the figure overleaf.
- Slowly pour in fluid (mixture consisting of 50% water and 50% paraflù), until the fluid emerges from bleed fitting (A) on the radiator, then tighten fitting.
- Continue to pour in fluid until it emerges from bleed fitting (B) located on heater sleeve, then tighten the fitting.
- Carry on filling until fluid emerges from bleed fitting (C) located on intake manifold outlet pipe. Check in expansion tank to see that fluid level is beyond the MAX level, then tighten bleed fitting (C).
- Start up engine and leave to idle.
- Loosen bleed fitting (C) and simultaneously increase the engine revs slightly to prevent any residual air emerging. Then tighten bleed fitting (C) as the fluid emerges. Repeat the same operation for bleed fitting (B).
- Pump accelerator pedal gradually and at intervals until revs rise to about 4000 rpm.
- Wait until the fan has come on at least twice.
- Turn off the engine and check that fluid level is between the MIN and MAX marks on the expansion tank (carry out operation with engine cold).
- Top up without exceeding the MAX mark, if required.

NOTE *If fluid boils during operation, stop filling in order to find the defective component and replace it. Then repeat filling operation.*

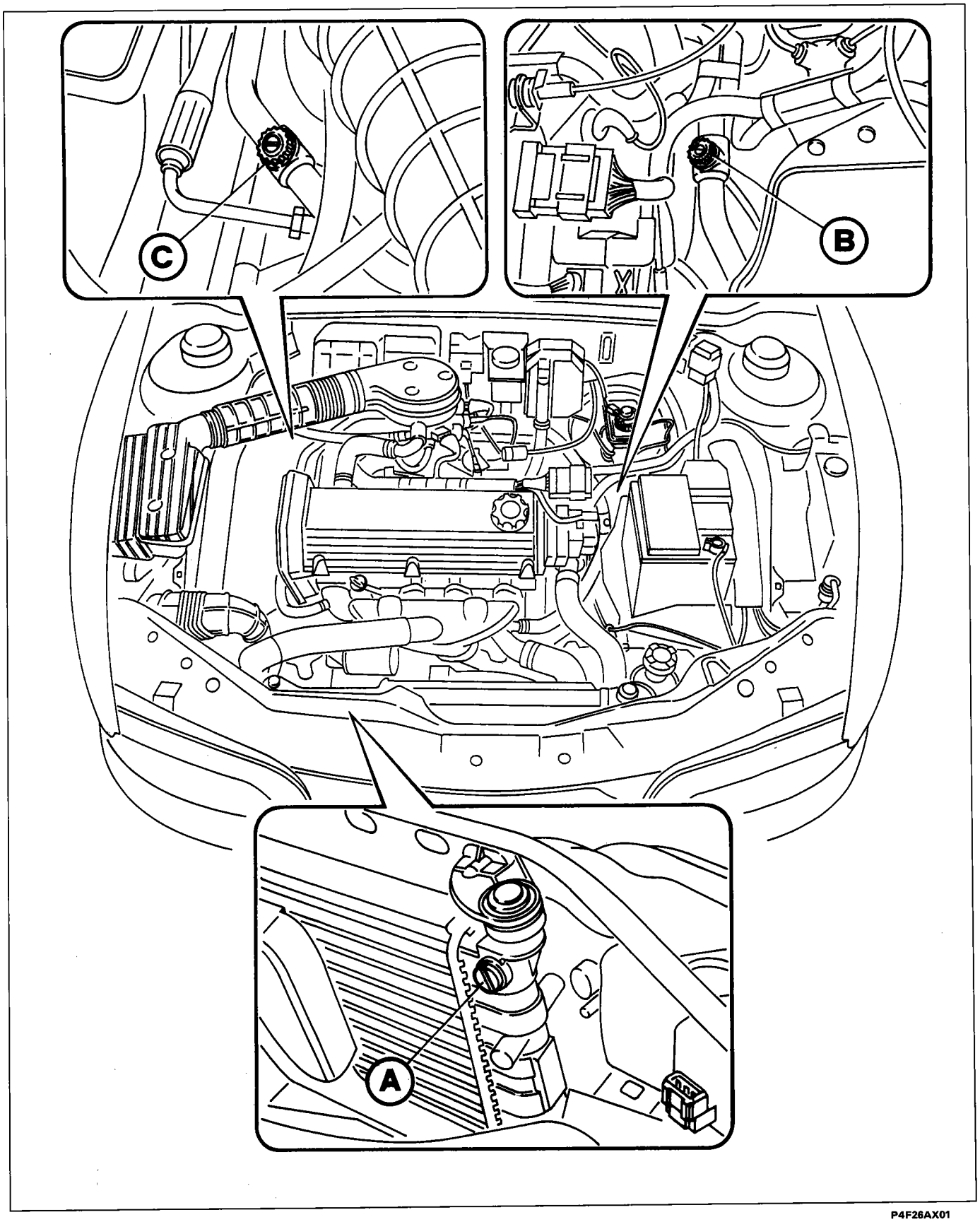

P4F26AX01

Copyright Fiat Auto

10.

RADIATOR FILLING PROCEDURE FOR AIR-CONDITIONED VERSIONS

- Ensure all cooling system components are completely empty before beginning filling procedure.
- Open bleed fittings (A-B-C-D) shown in the figure overleaf.
- Slowly pour in fluid (mixture consisting of 50% water and 50% paraflù), until the fluid emerges from bleed fittings (A) and (B) on the radiator, then tighten fittings.
- Continue to pour in fluid until it emerges from bleed fitting (C) located on heater sleeve, then close the fitting.
- Continue filling until fluid emerges from bleed fitting (D) on the intake manifold outlet pipe. Then tighten the fitting.
- Continue filling until the fluid reaches a level corresponding to the MAX mark shown on the expansion tank.
- Start up engine and leave to idle for 2 or 3 minutes.
- Pump the accelerator every 30 seconds to take engine speed gradually up to about 4000 rpm. Simultaneously pour coolant into the expansion tank without ever exceeding the MAX mark. Continue this operation until the cooling fan comes on for the first time.
- Wait until the fan has come on at least twice, then turn off the engine.
- Leave the engine to cool down and top up, if necessary, until the fluid level is between the MIN and MAX marks on the expansion tank.

NOTE *If the fluid boils during the operations described previously, stop the procedure in order to find the defective component and replace it. Then repeat the filling procedure.*

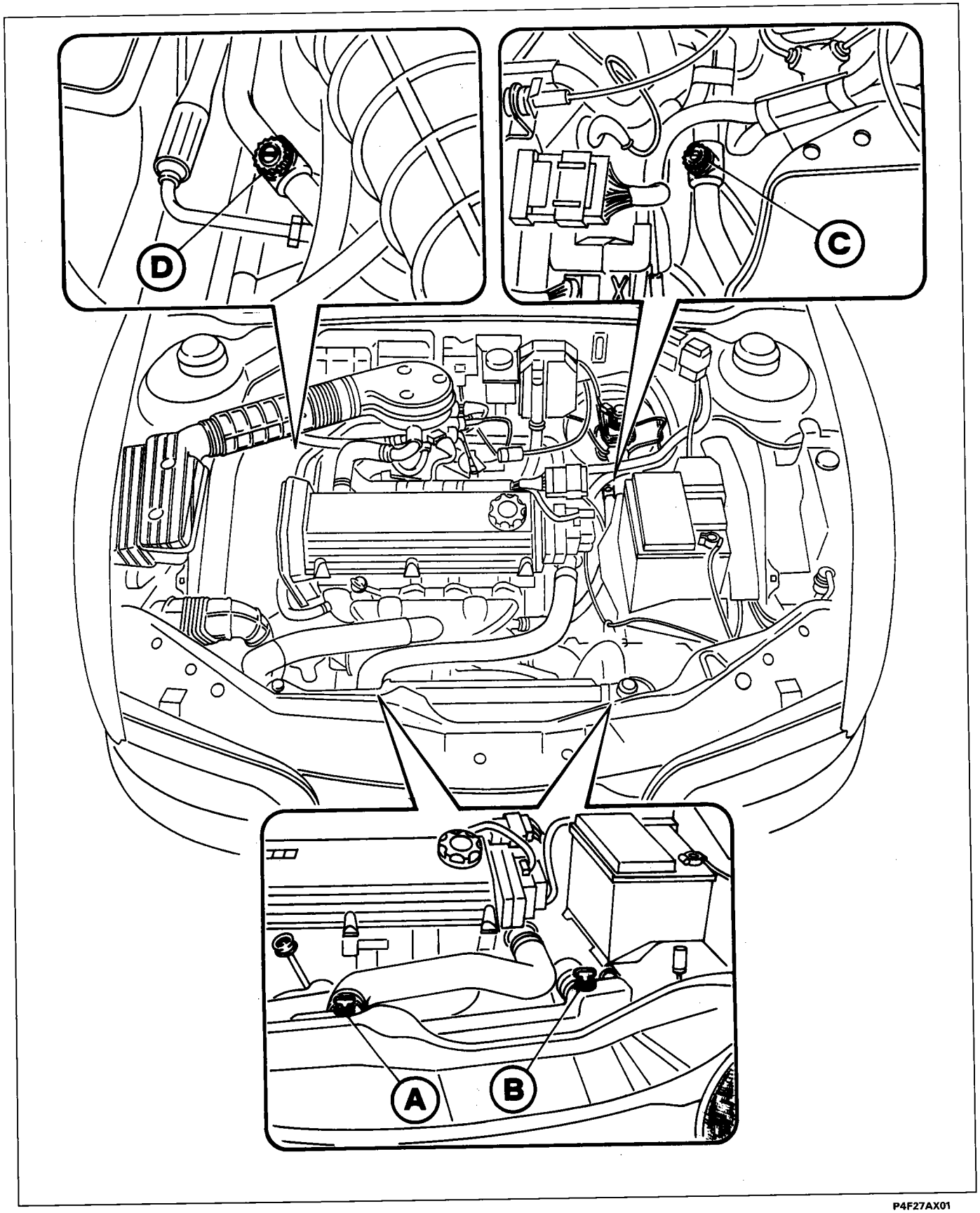

P4F27AX01

Copyright Fiat Auto

page

REMOVING-REFITTING

- Removing-refitting power unit 1

REPLACING AUXILIARY COMPONENT BELT

- Removing-refitting alternator-coolant pump drive belt 9
- Removing-refitting power, steering pump drive belt 10

REPLACING TIMING BELT

- Removing-refitting timing belt 11
- Adjusting timing to "0" 12
- Adjusting timing belt tension 16

REMOVING-REFITTING CYLINDER HEAD

- Removing-refitting cylinder head 18

REMOVING-REFITTING COOLANT PUMP

- Removing-refitting coolant pump 25

REMOVING-REFITTING RADIATOR

- Removing-refitting radiator 27
- Cooling system filling procedure (heated version) 28
- Cooling system filling procedure (version with a/c) 28

Copyright Fiat Auto

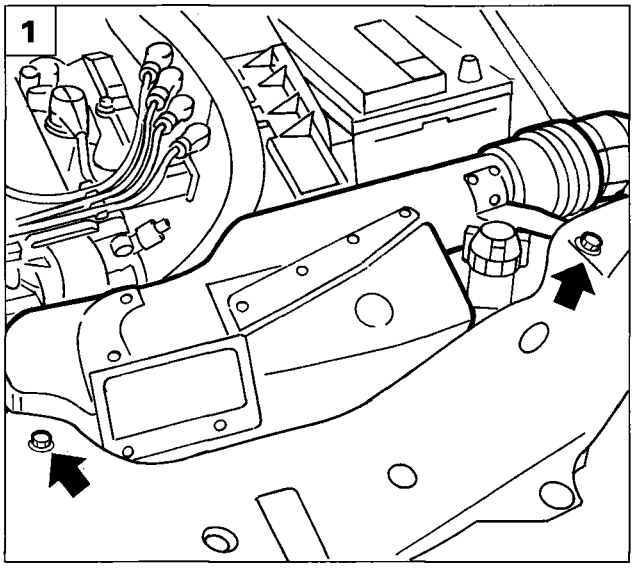

P4F01BX01

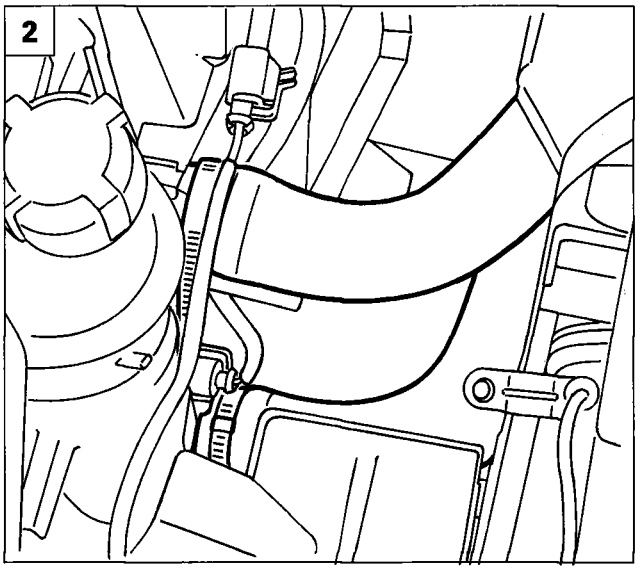

P4F01BX02

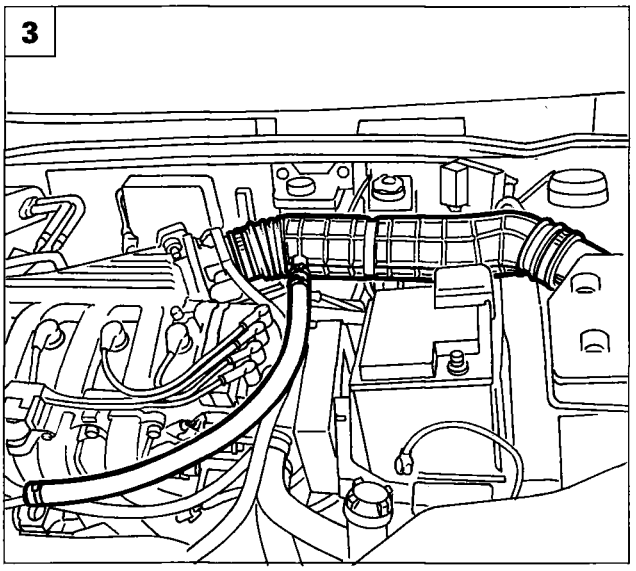

P4F01BX03

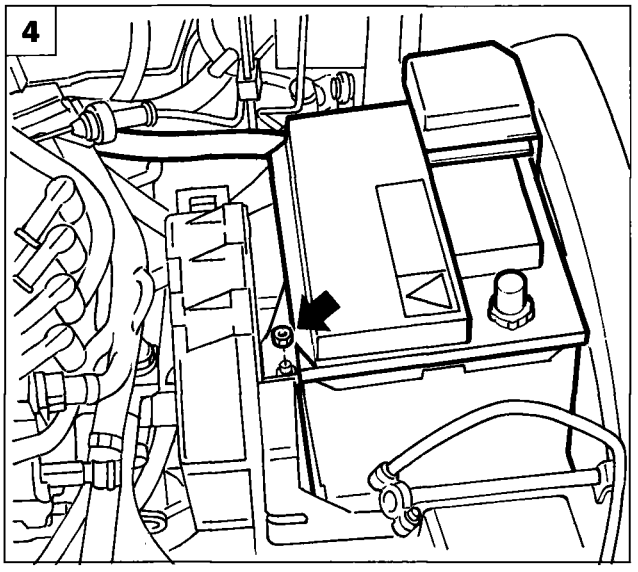

P4F01BX04

REMOVING-REFITTING POWER UNIT

Position vehicle on lift, remove front wheels and disconnect battery negative terminal, then proceed as follows:

1. Remove the air shroud by undoing the screws shown in the figure, which retain the unit to the front beam.
2. Position a suitable container to recover the coolant and remove sleeves shown in the figure, which carry coolant to and from the expansion tank.
3. Remove the air intake duct by undoing the clips shown in the figure, then remove from engine bay together with oil vapour recovery line.
4. Lift battery positive terminal protective cover and disconnect lead. Unscrew nut retaining battery to holder, then remove from engine bay with battery holder guard.

Copyright Fiat Auto

10.

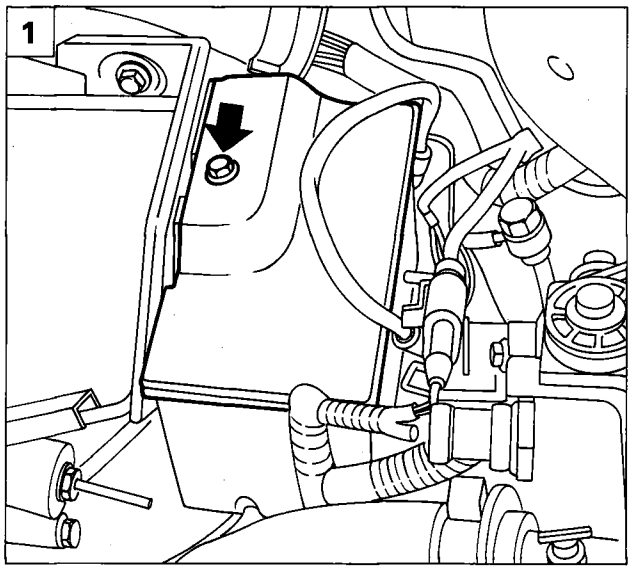

P4F02BX01

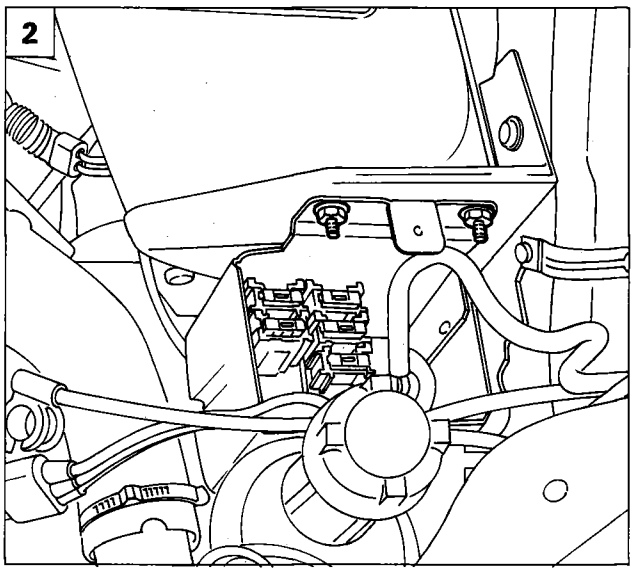

P4F02BX02

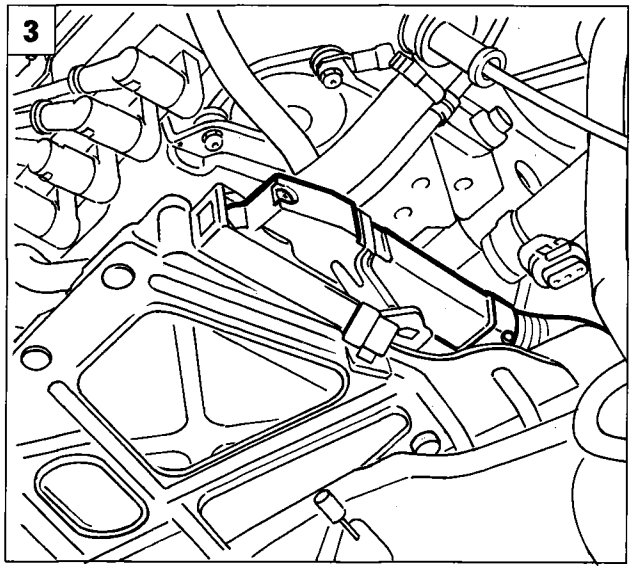

P4F02BX03

1. Remove cover of relay and fuse box by undoing screw indicated.
2. Remove nuts retaining relay and fuse box to battery holder, then place box to one side.
3. Disconnect i.e. ECU supply connector
4. Remove nuts retaining i.e. ECU support bracket, then remove the ECU from the engine bay. The nuts indicated also retain the starter motor supply wires and the joint between the front lead and the injection lead.
5. Remove screws (1) and loosen (2) retaining battery holder to body. Before removing the holder, disconnect the underlying retaining clip.

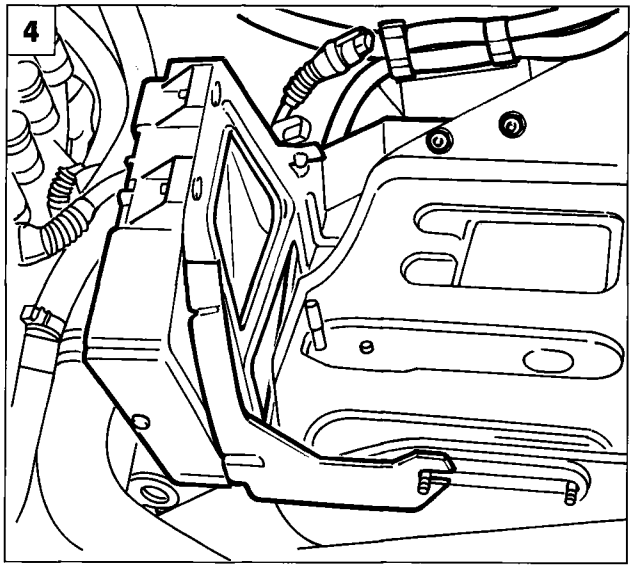

P4F02BX04

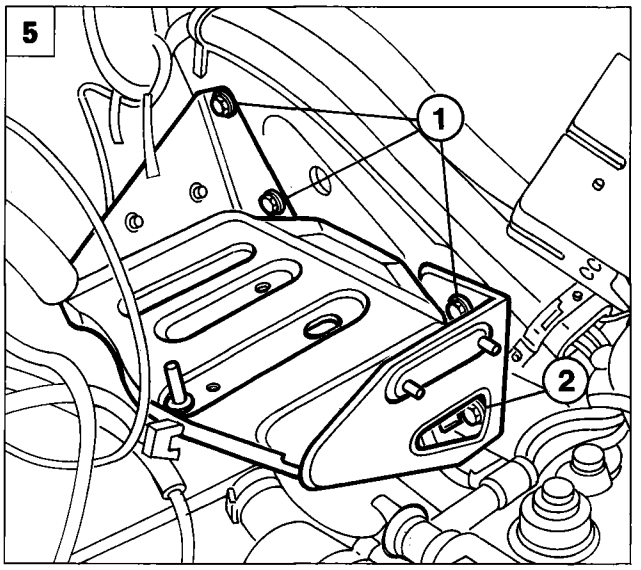

P4F02BX05

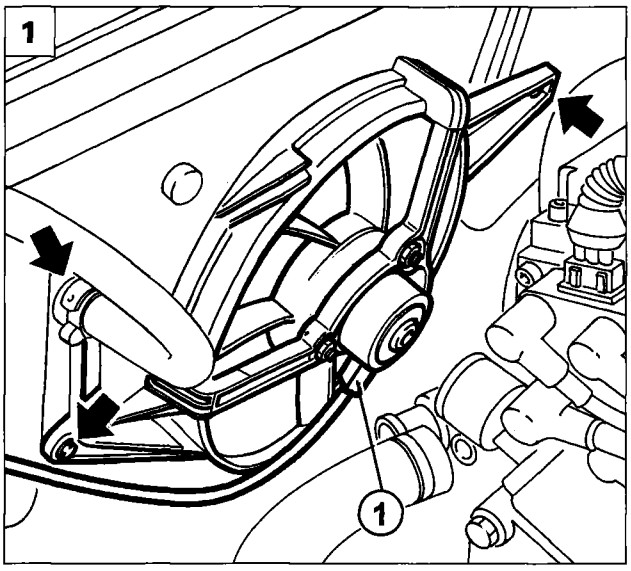

P4F03BX01

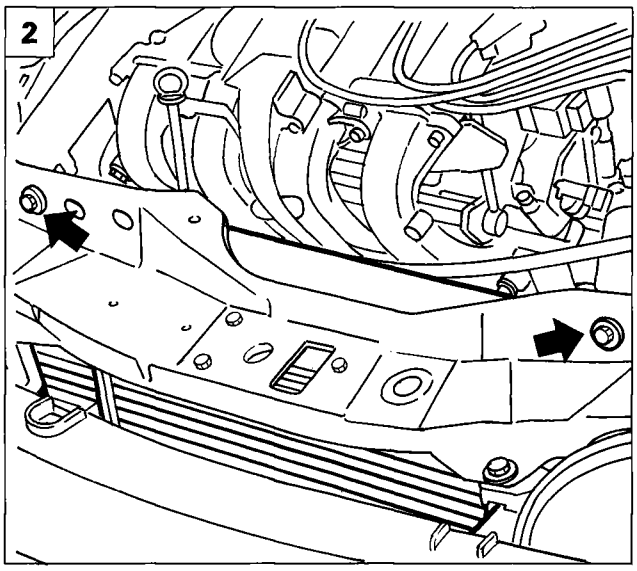

P4F03BX02

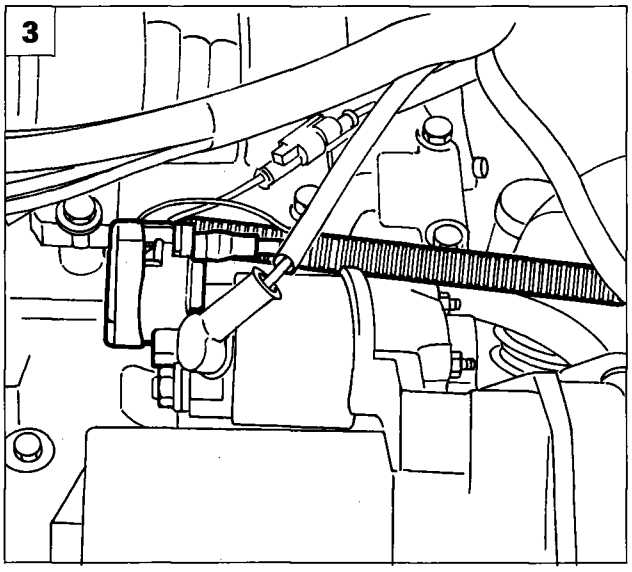

P4F03BX03

1. Remove the fan by undoing the retaining clips. Take care to disconnect the supply connections.
2. Remove the screws indicated in the figure, which retain the radiator to the front beam. Then remove the radiator from the engine bay by lifting upwards.
3. Lift protective cover, then remove starter motor supply lead.
4. Disconnect connectors for the joint between front leads and injection leads.
5. Undo screw shown in figure to remove relay carrier bracket protective cover. Disconnect connectors from relays and absolute pressure sender unit.

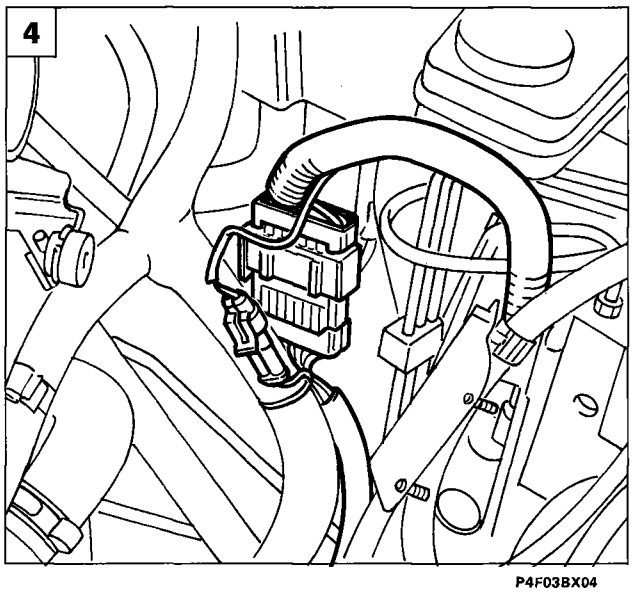

P4F03BX04

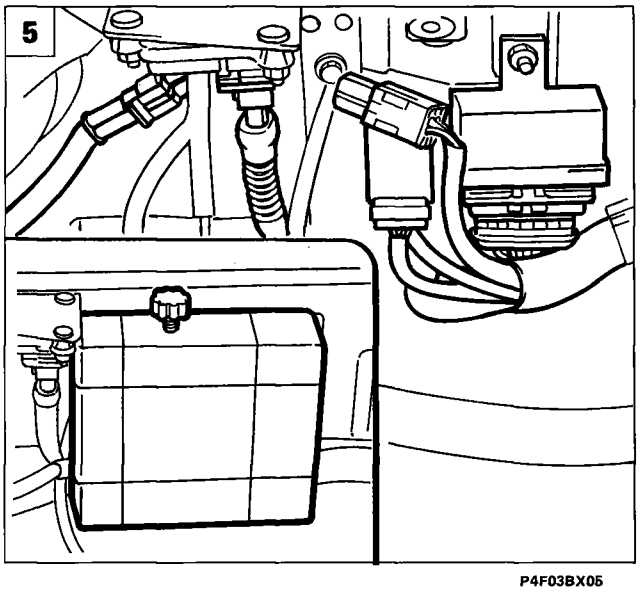

P4F03BX05

10.

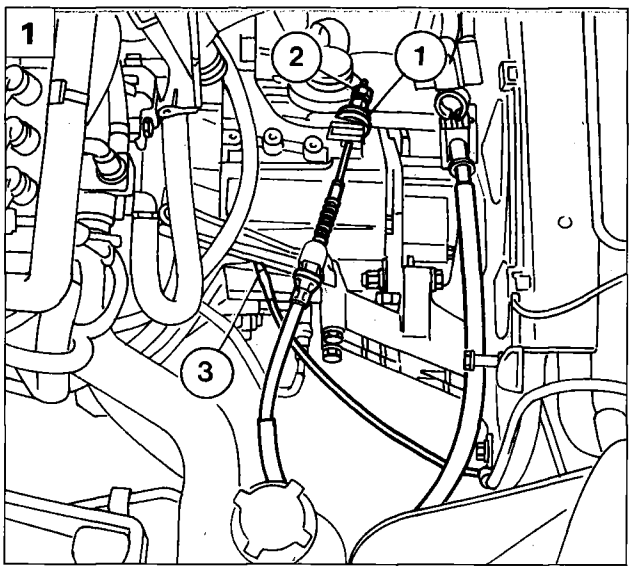

P4F03CX01

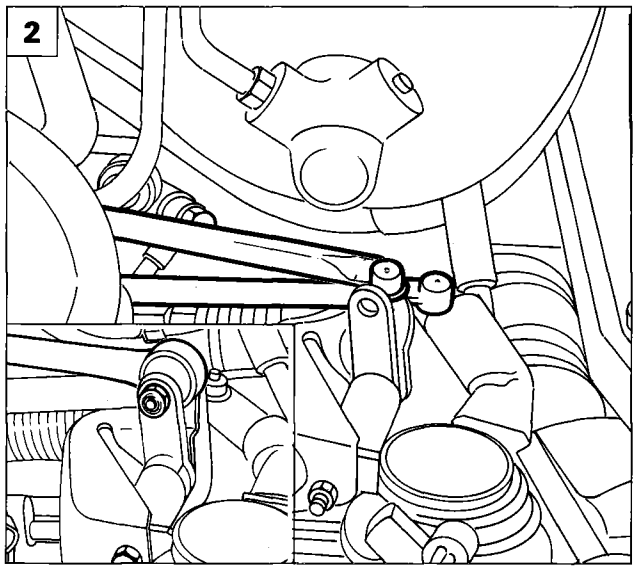

P4F04CX05 P4F04CX02

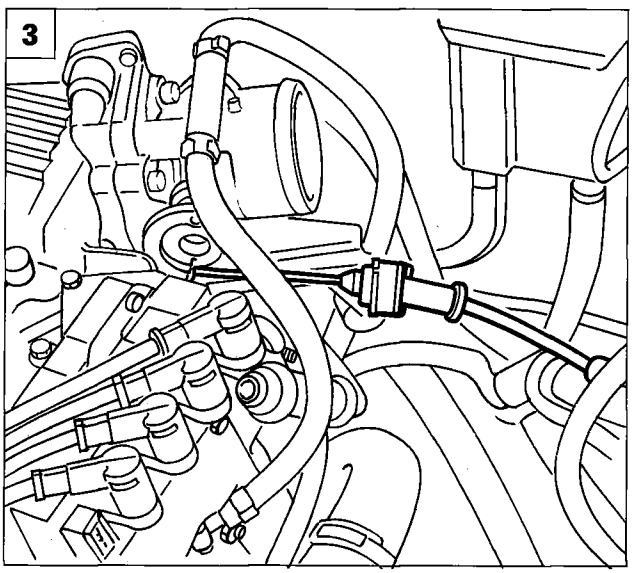

P4F04BX03

1. Disconnect the clutch cable by undoing nut (1) and lock-nut (2) shown in figure. Also disconnect earth lead (3) from gearbox.
2. Disconnect reaction link shown in box and gear selection/engagement levers from gearbox.
3. Disconnect accelerator cable.
4. Disconnect input and output pipes from heater. Disconnect at points shown in figure.
5. Disconnect fuel input and outlet lines evaporation control system line and absolute pressure sender unit pipe from intake manifold. Remove support bracket (1) to facilitate fuel line removal.

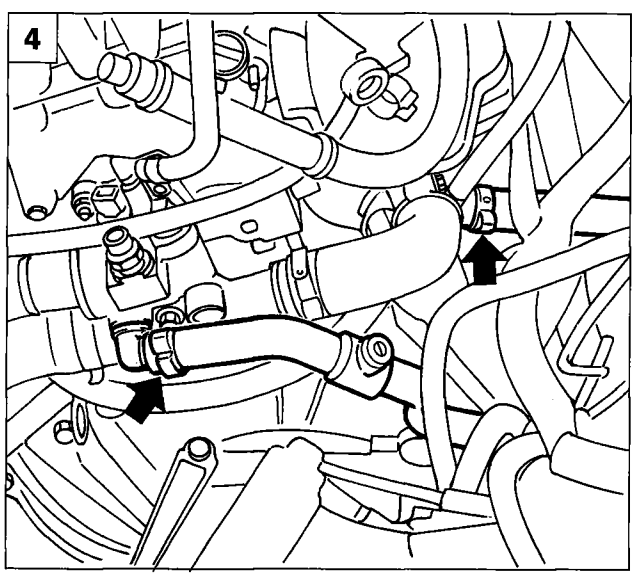

P4F04BX04

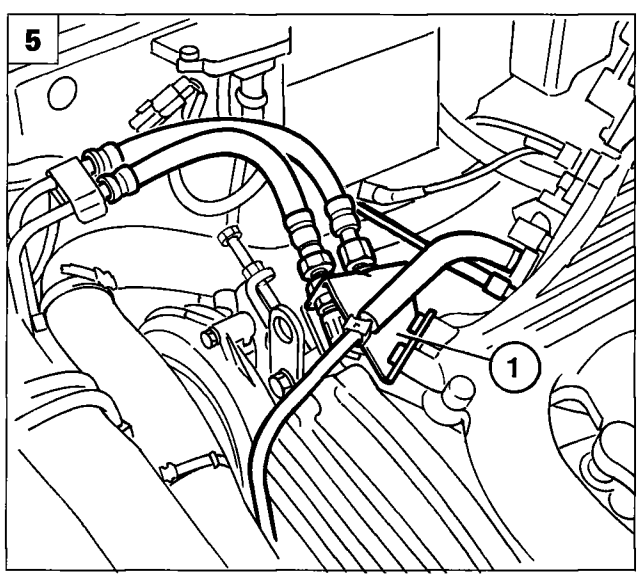

P4F04BX05

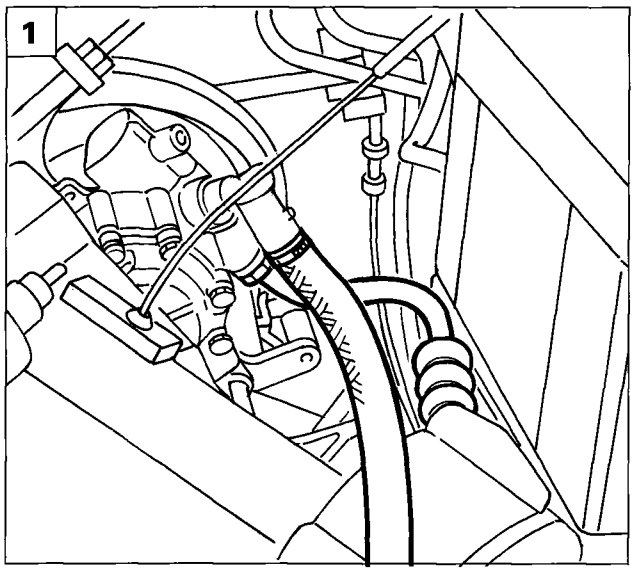

P4F05BX01

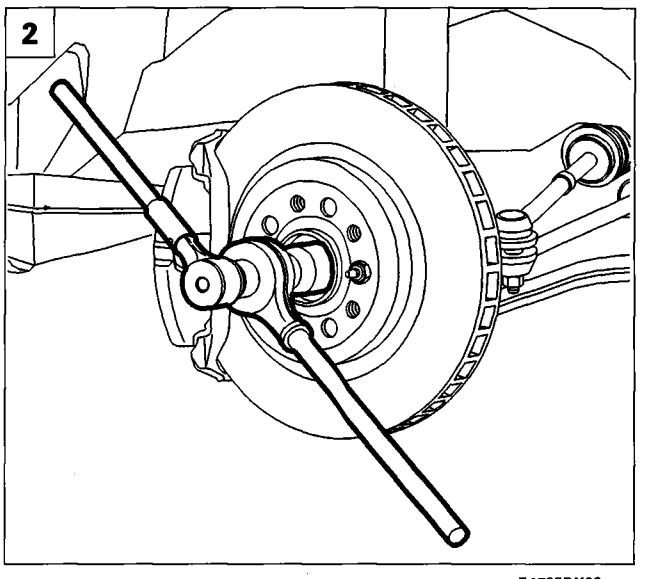

P4F05BX02

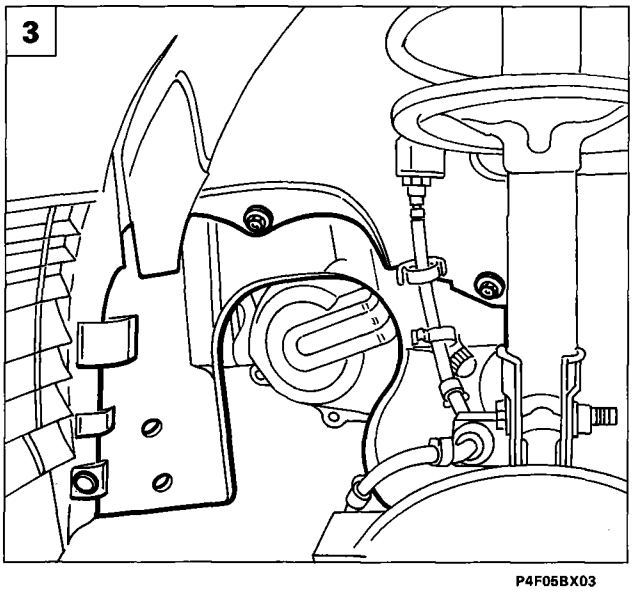

P4F05BX03

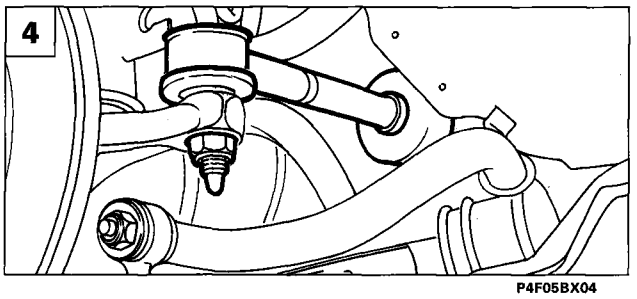

P4F05BX04

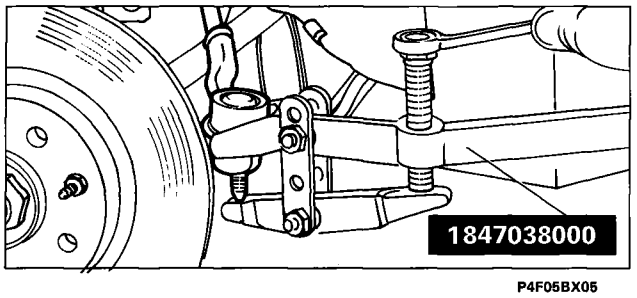

P4F05BX05

1. Drain power steering fluid, then disconnect fluid intake from reservoir and pressure delivery line from power steering pump. Arrange a suitable container below the vehicle to recover remaining fluid.

2. Unstake and then remove wheel hub retaining nut (gearbox end and timing end).

3. Remove gearbox end wheelarch plastic protection by undoing screws and retaining studs shown in the figure. Disconnect brake pad wear sensor connection to remove protection.

4. Remove nut retaining steering link head to pillar, then remove from pillar arm by means of extractor 1847038000 (repeat the operation for both heads).

10.

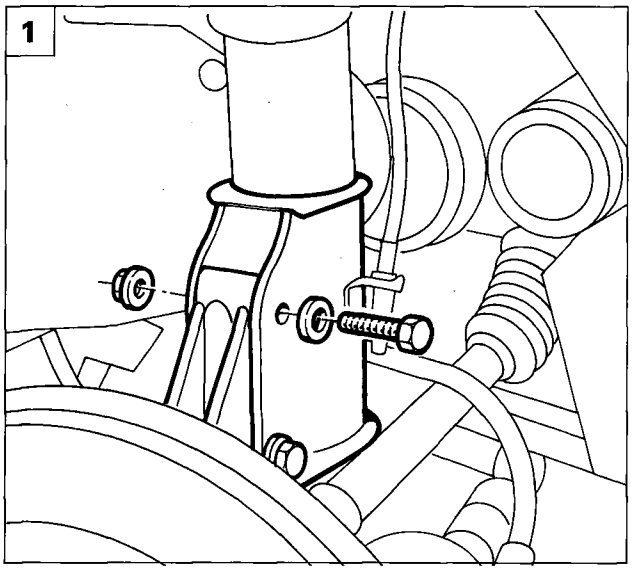

P4F06BX01

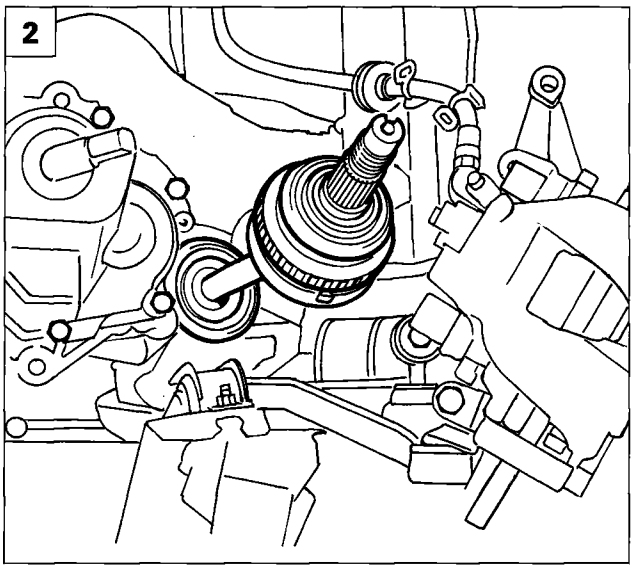

P4F06BX02

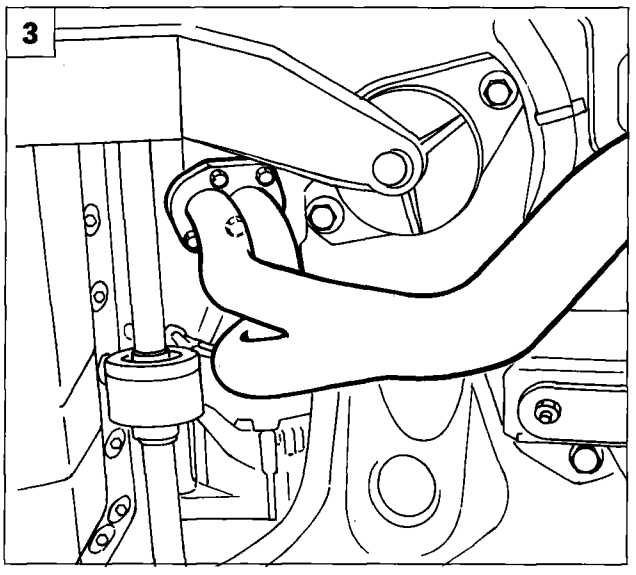

P4F06BX03

1. Remove bolts retaining pillar (gearbox end and timing end) to damper.
2. Turn pillar to remove half-axle from wheel hub (repeat the operation for both half-axles).
3. Remove nuts retaining first exhaust pipe section to exhaust manifold.
4. Disconnect lambda probe electrical connection by unscrewing screws retaining first exhaust pipe section to catalytic converter, then remove the pipe.
5. Remove bolts indicated in figure from gearbox bell housing so that tool can be positioned in order to remove the power unit.

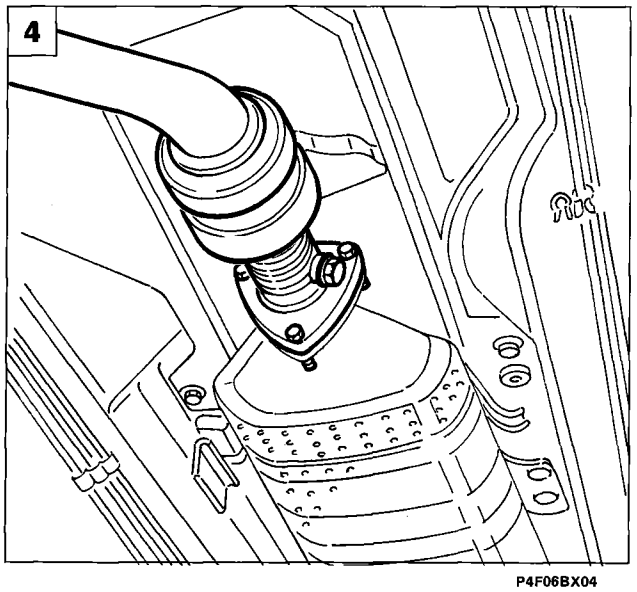

P4F06BX04

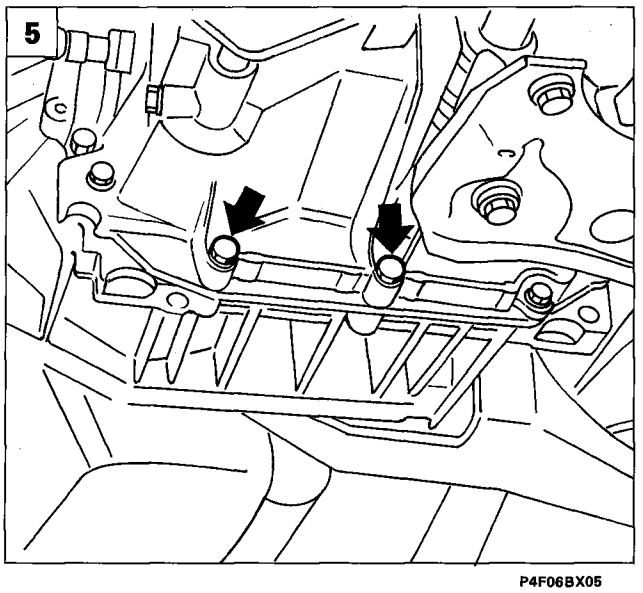

P4F06BX05

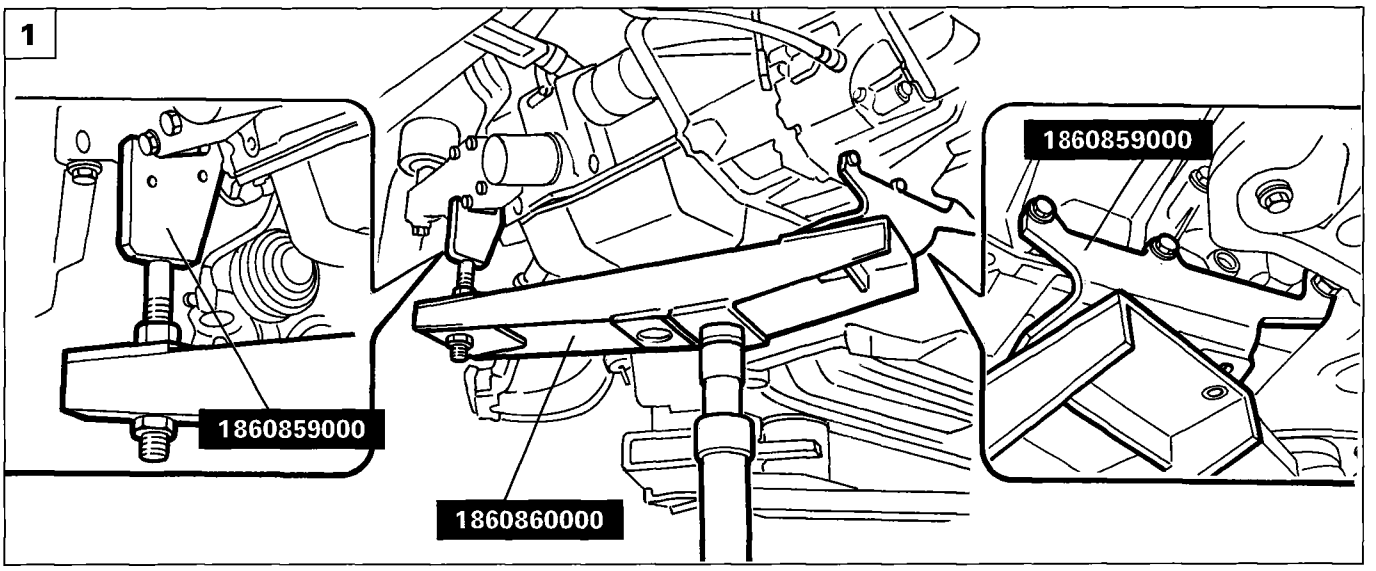

P4F07BX01

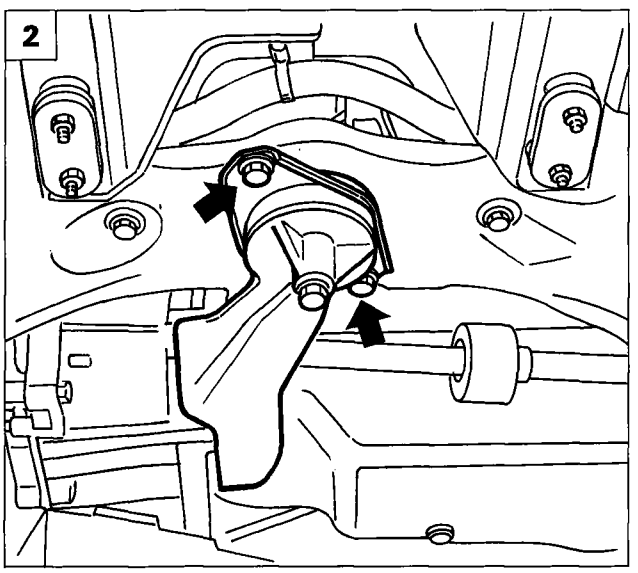

P4F07BX02

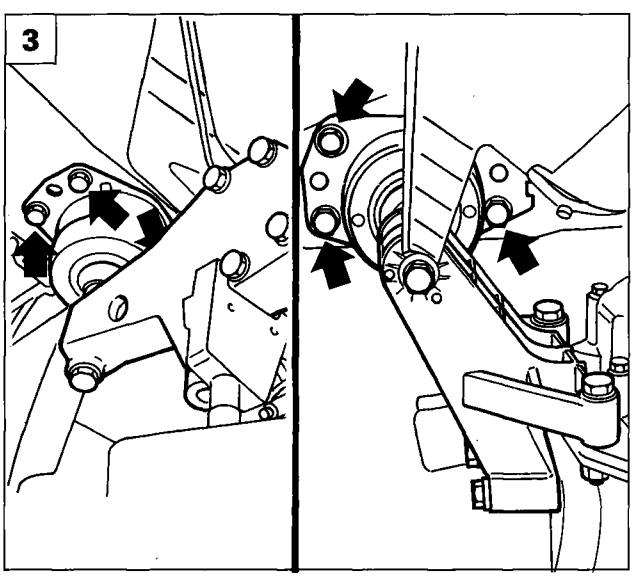

P4F07BX03

1. Position engine support tool 1860860000 on the hydraulic jack and fasten to power unit using tools 1860859000 at the points shown in the figure.

The hydraulic jack should be designed to carry at least 1000 kg and be high enough to allow the power unit to be removed from below. It is therefore necessary to consider maximum possible lift height and minimum possible hydraulic jack height.

2. Remove bolts retaining central power unit mount.

3. Remove bolts retaining side engine mounts to body.

10.

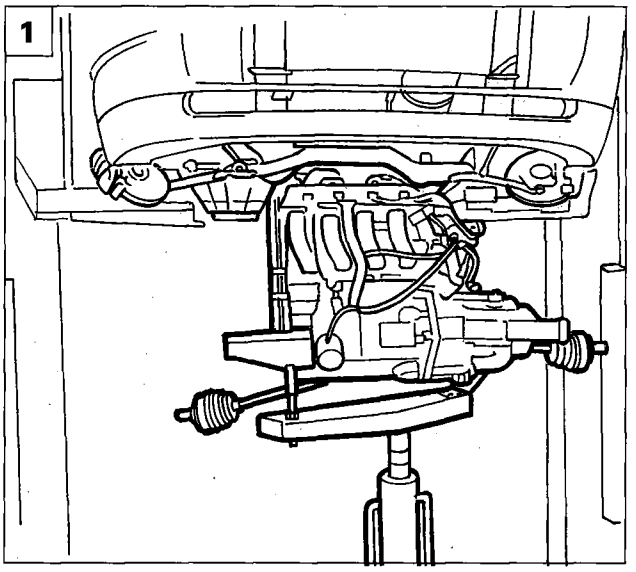

P4F08BX01

1. Lower the hydraulic jack and remove power unit from lower part of vehicle.

Lower hydraulic jack gradually and check power unit is properly positioned and balanced on the support tool.

2. Position power unit on a platform using a hydraulic lift.

Do not move the power unit when fitted on hydraulic jack. Use a hydraulic lift fitted with tools 1860592000 to move the power unit after releasing from support tool.

NOTE *To refit the power unit, simply reverse order of removal instructions.*

- *Prepare the engine bay to fit the power unit. Take care to connect all electrical leads, pipes etc. in order to avoid any possible hitches;*
- *Take great care not to damage individual components when the power unit is fitted*
- *When fitting the coolant lines, align groove on rubber hose with ridge on associated rigid sleeve. When filling the cooling system, refer to section on "Removing-refitting radiator".*

First secure engine end mount by tightening retaining bolts to the body by the specified torque. Then secure gearbox end mount and lastly the central differential end mount. Ensure that the power unit mounting points are properly secured.

Clutch pedal height.

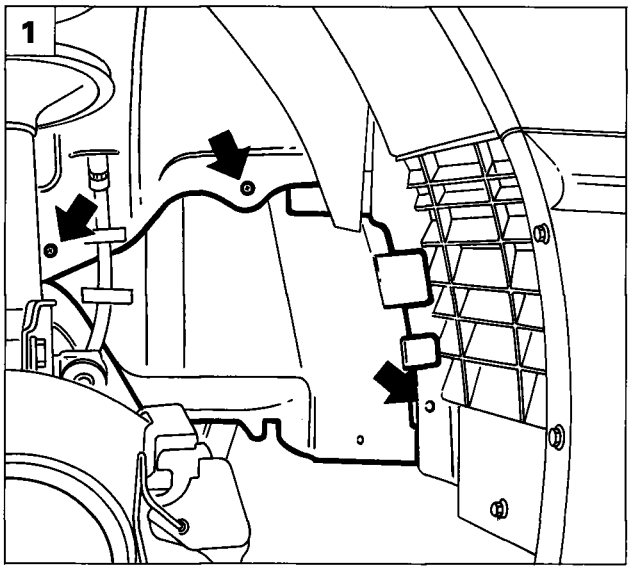

P4F09BX04

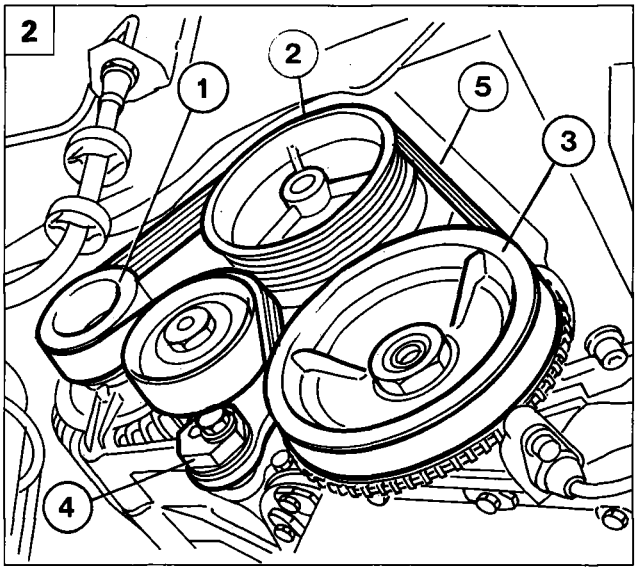

P4F09BX02

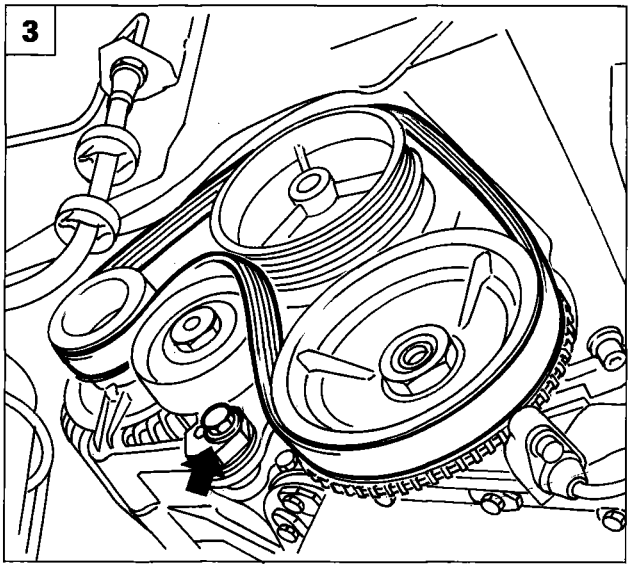

P4F09BX03

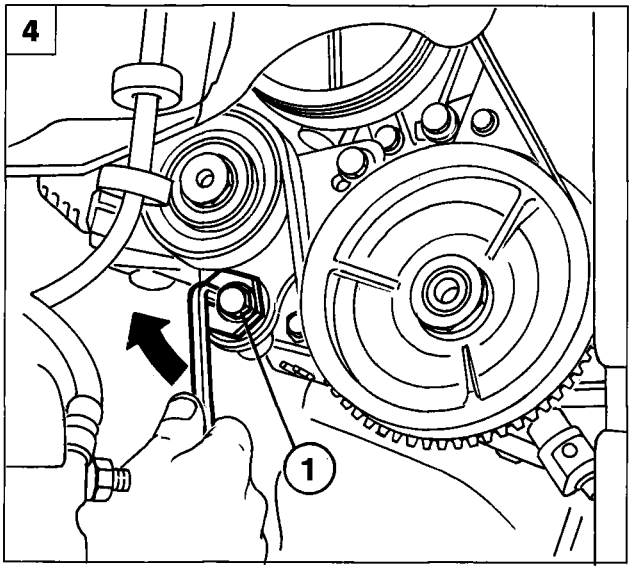

P4F09BX04

REMOVING-REFITTING ALTERNATOR - COOLANT PUMP DRIVE BELT

1. Remove the right front wheel arch lining in order to gain access to the auxiliary component drive belt.

Check the condition and efficiency of the auxiliary component drive belt. In particular, check for cracks, tears, surface wear (smooth or shiny in appearance) and dry or hard parts with consequent loss of grip. Replace belt if even one of the above defects is present.

2. View of alternator - coolant pump drive belt:
   1. Alternator
   2. Coolant pumpt
   3. Of crankshaft pulley
   4. Tensioning device
   5. Alternator - coolant pump drive belt

Prevent the belt coming into contact with oil or solvents which could affect the elasticity of the rubber with consequent loss in grip.

3. Loosen lower alternator fastening bolt.

Refitting

4. Fit the new bolt and turn the tensioning device by means of the hexagonal hole on the device itself. Then tighten screw (1).

10.

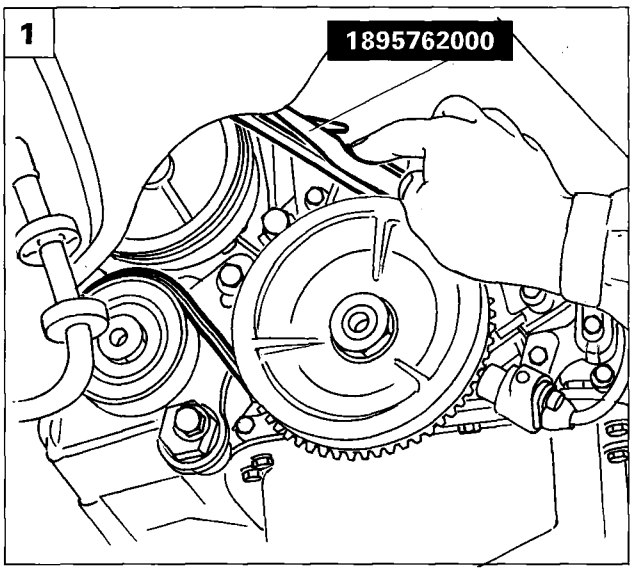

P4F10BX01

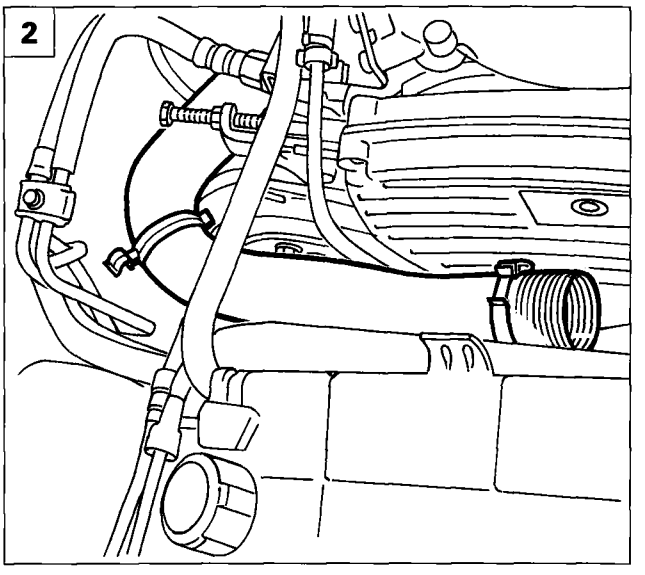

P4F10BX02

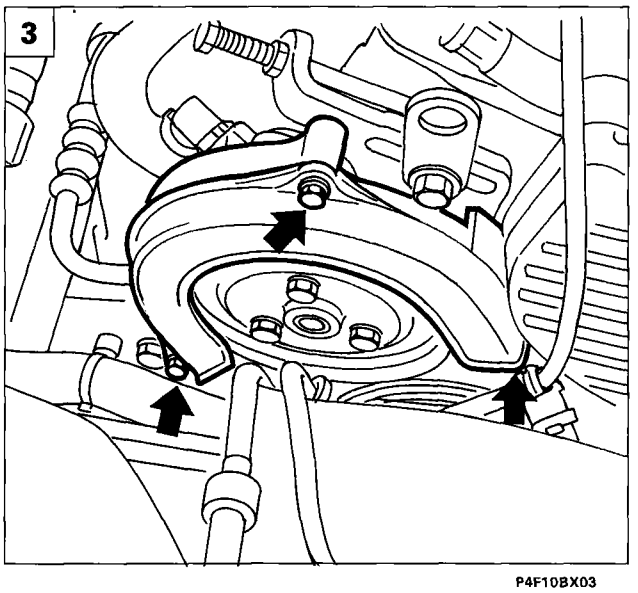

P4F10BX03

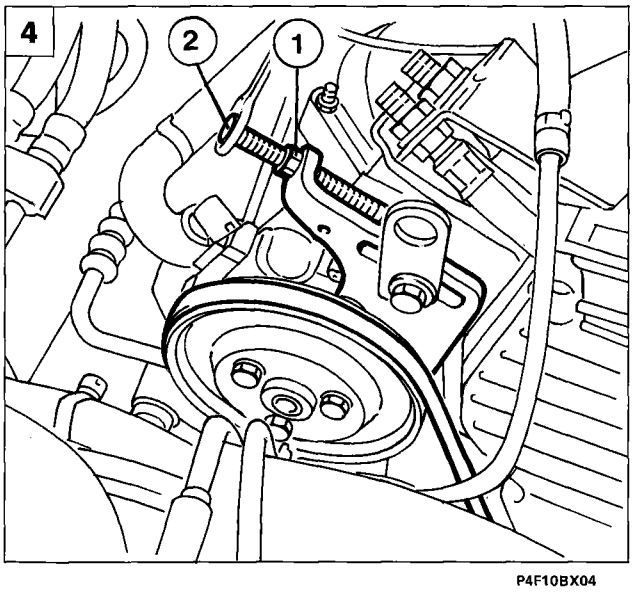

P4F10BX04

1. Within 30 minutes of fitting a new belt, use tool 1895762000 to check that belt tension is between 52 - 67 daN. Otherwise, adjust tensioning device and check tension again.

REMOVING-REFITTING POWER STEERING PUMP DRIVE BELT

Before removing the power steering pump drive belt, remove the alternator - coolant pump drive belt as described in the previous section.

2. Remove the air intake line shown in the figure.
3. Remove the power steering pump case.
4. Slacken belt tension by adjusting retaining nut (1) and adjustment screw (2). Then prise belt off control pulley.

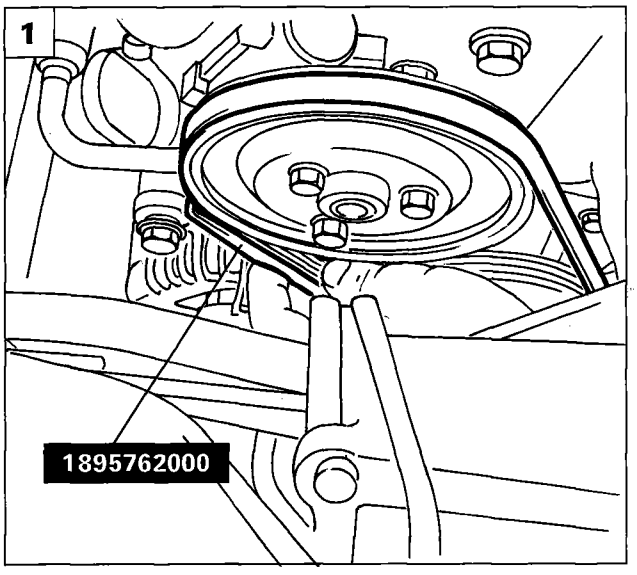

P4F11BX01

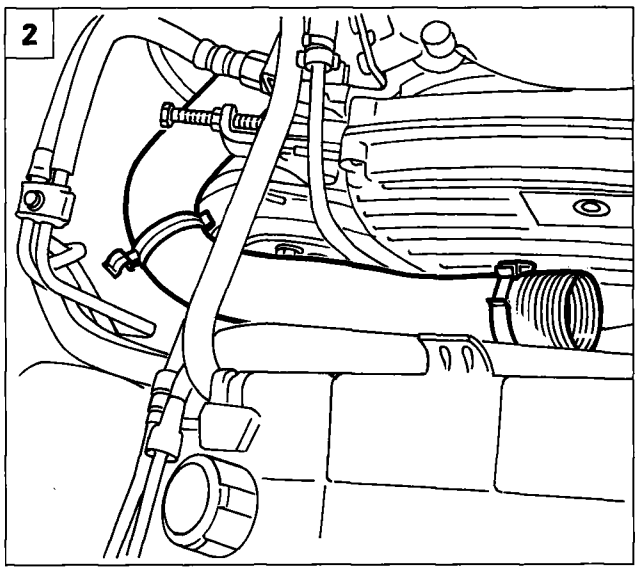

P4F11BX02

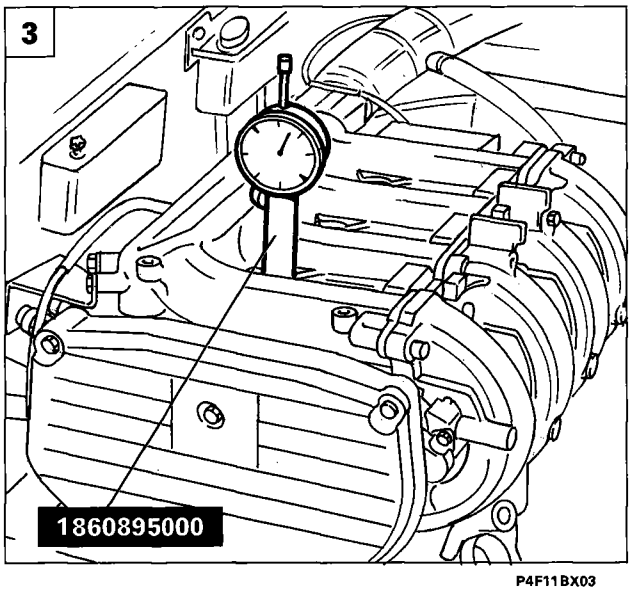

P4F11BX03

P4F11BX05

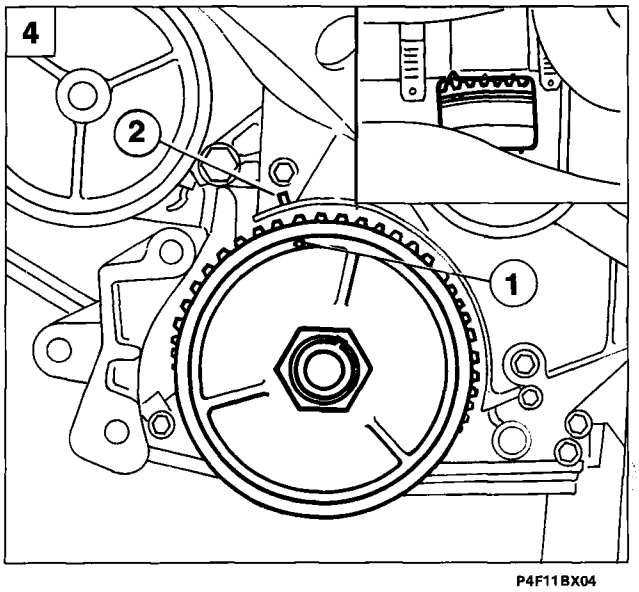

P4F11BX04

Refitting

1. Tension power steering pump drive belt by adjusting regulation screw: use tool 1895762000 to check tension is between 32 - 45 daN within 30 minutes of fitting the new belt.

REMOVING-REFITTING TIMING BELT

Before removing the timing belt, remove the auxiliary belt as described previously

2. Remove the air intake line shown in the figure.
3. Remove the spark plugs and position the gauge against cylinder no. 1 using mount 1860895000. Turn the crankshaft to record t.d.c.
4. Check that notch (1) on the alternator belt drive pulley on the crankshaft, is aligned with the reference mark (2) located on the lower timing belt guard. Check that notch on flywheel is aligned with the reference mark on the bell housing, as shown in the box.

Copyright Fiat Auto

10.

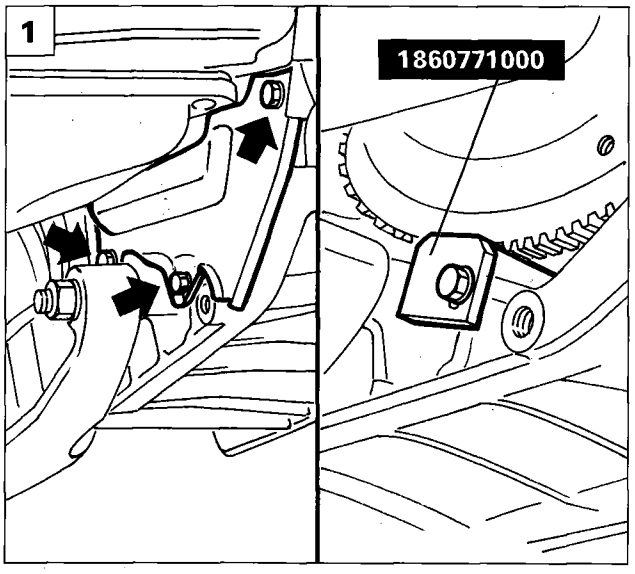

P4F12BX01

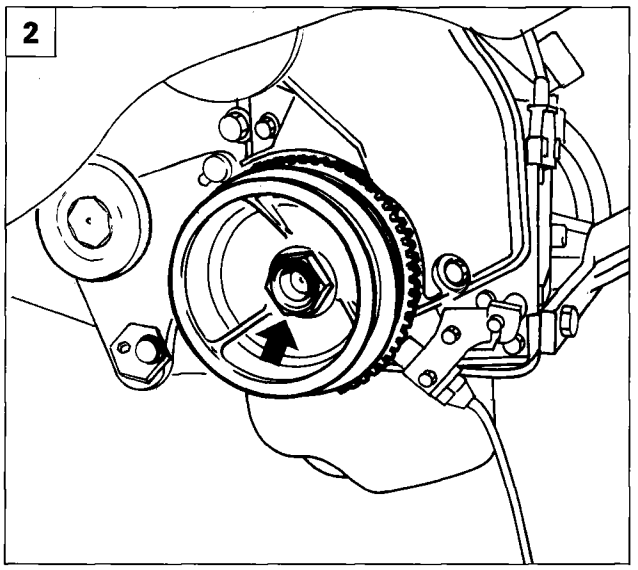

P4F12BX02

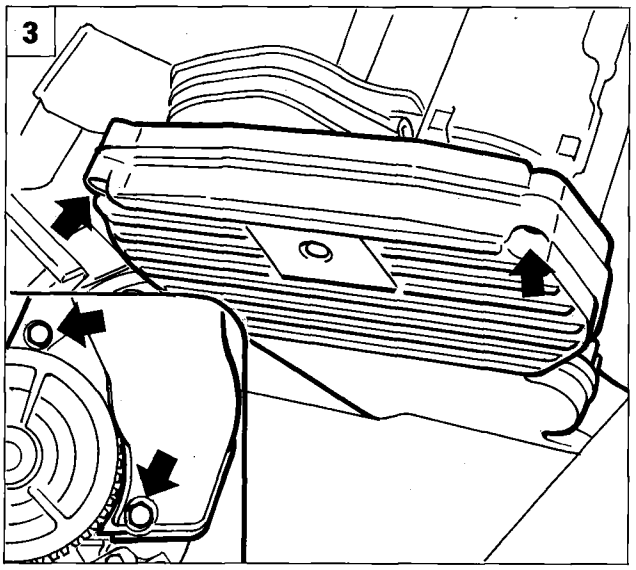

P4F12BX03

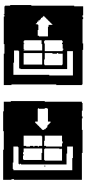

1. Remove lower flywheel protection case from bell housing, then position flywheel retainer 1860771000.
2. Remove alternator belt drive pulley on crankshaft.
3. Remove timing belt cover. Lower fastenings are shown in the box.
4. Loosen automatic belt tensioner fastening nut in order to release belt tension. Then remove the belt.

ADJUSTING TIMING TO "0"

5. Loosen camshaft pulley retaining bolts using tool 1860885000 fitted to mount 1860831001 as a reaction tool.

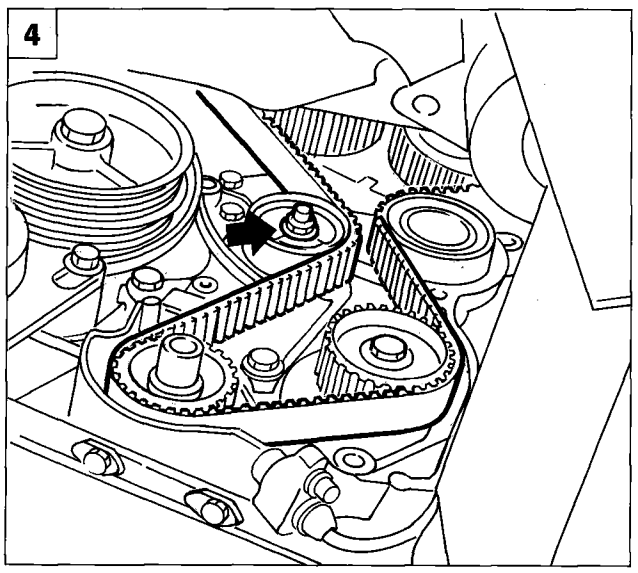

P4F12BX04

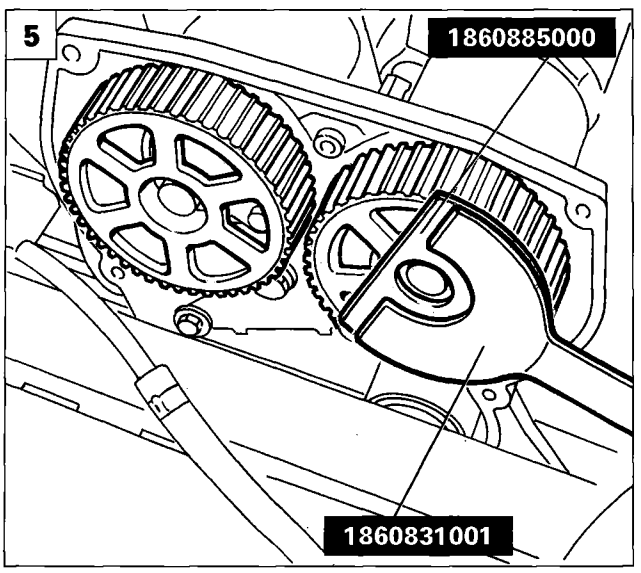

P4F12BX05

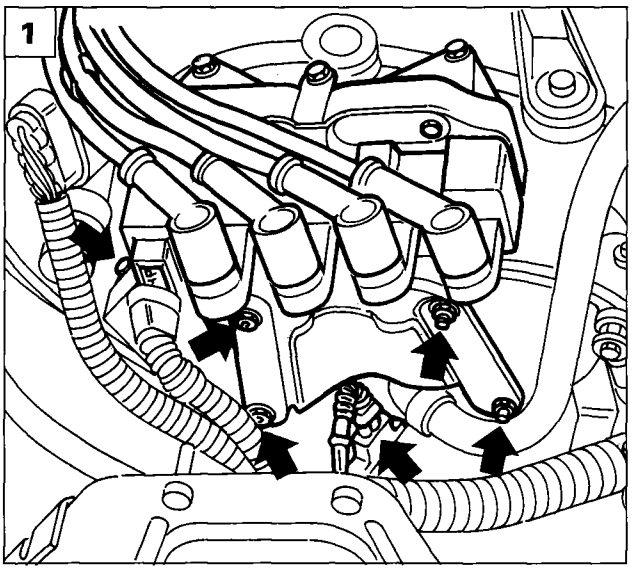

P4F13BX01

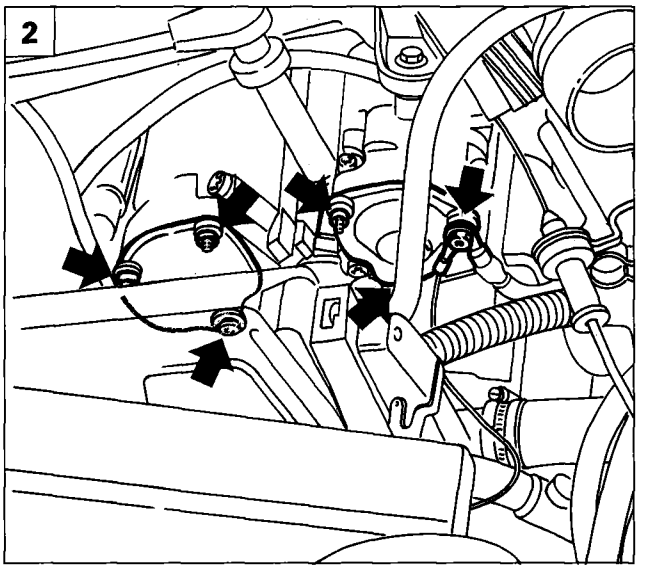

P4F13BX02

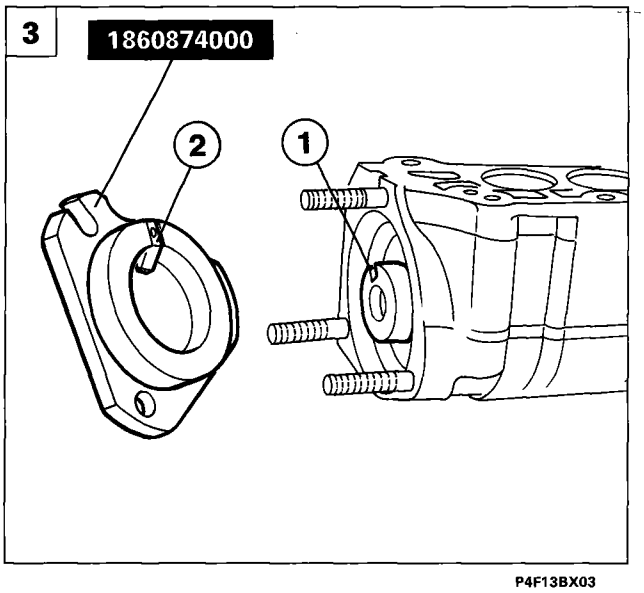

P4F13BX03

1. Disconnect connections shown in figure, then remove ignition coils by undoing support bracket retaining nuts.

2. Remove rear camshaft covers by undoing retaining nuts and disconnecting associated earth leads.

3-4. Position tools 1860874000 for camshaft timing adjustment. Align shaft seat (1) with key (2) on the tools. Fit key into the seat and fasten tool to the cylinder head by the covers removed previously. Repeat the operation for both intake and exhaust end camshafts.

If the tools do not fit perfectly and camshafts require rotation, align pistons so that none are set to t.d.c. in order to prevent valves sticking.

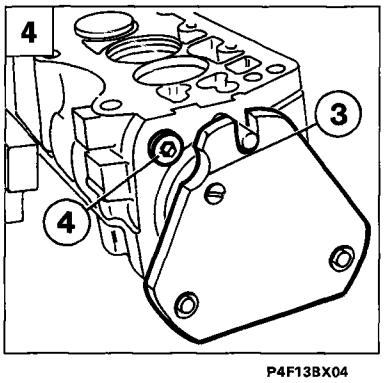

P4F13BX04

Shaft timing tools 1860874000 differ only in the reference seat (3) marked on the lower corner. This should be aligned with the cap (4) located on the cylinder head extension.

10.

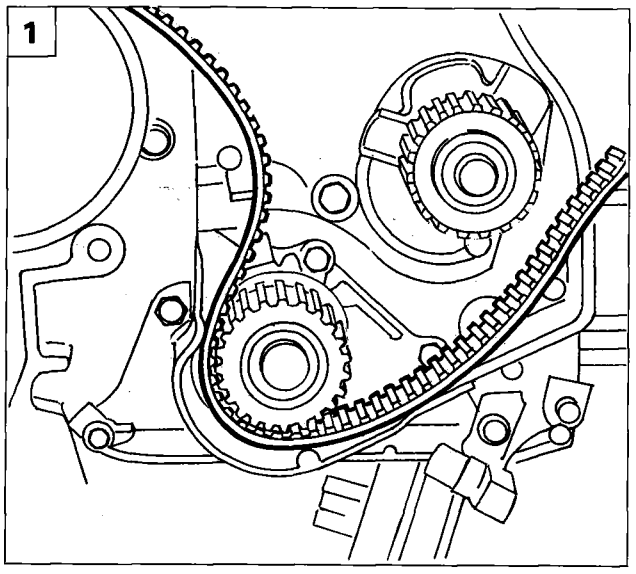

P4F14BX01

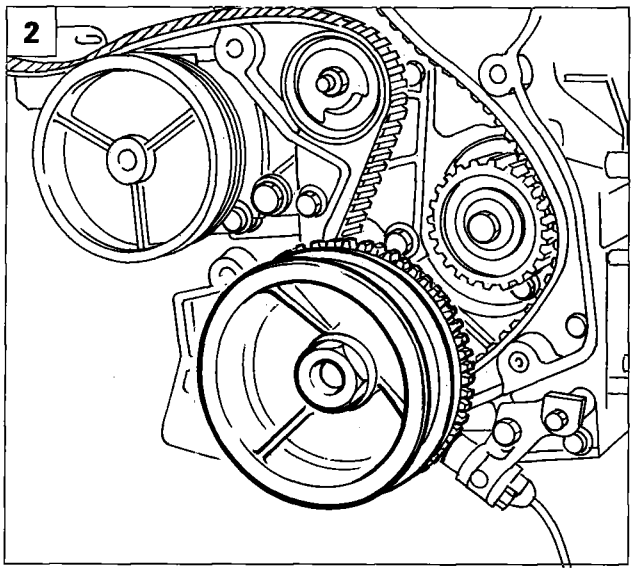

P4F14BX02

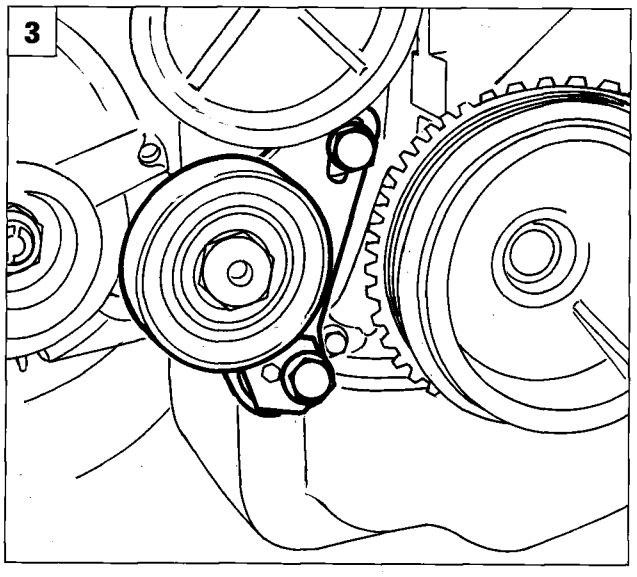

P4F14BX03

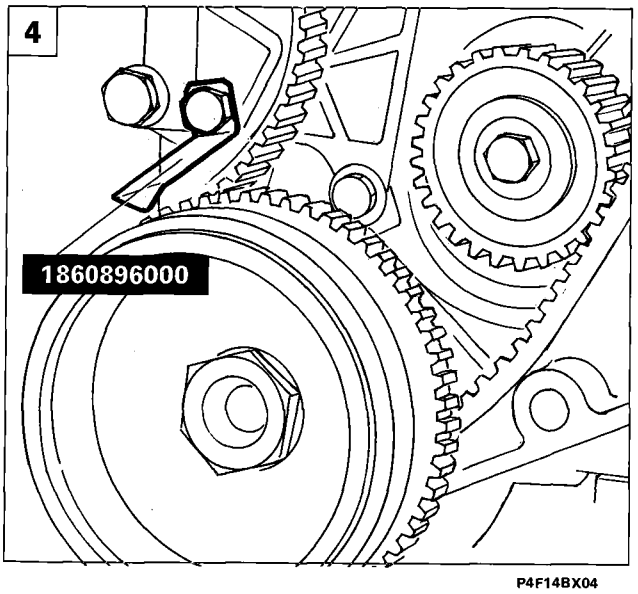

P4F14BX04

1. Fit timing belt onto crankshaft pinion.
2. With flywheel retainer 1860771000 fitted, fit auxiliary component drive pulley to the crankshaft and tighten retaining nut to a torque of 22 daNm. Then remove flywheel retainer.
3. Remove auxiliary component drive belt tensioner by undoing fastenings in order to allow tool to be secured so that timing can be set to "0".
4. Use gauge to recheck that cylinder no. 1 is at t.d.c. The use timing belt cover retaining screw to secure fixed indicator shown in the figure into screw seat.

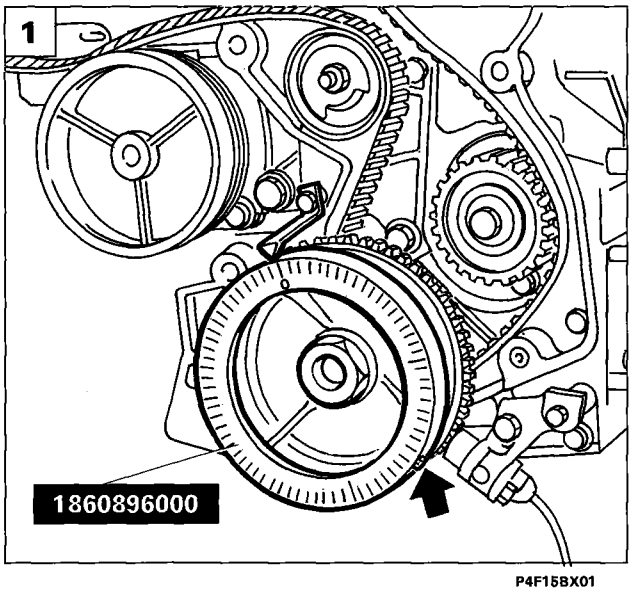

P4F15BX01

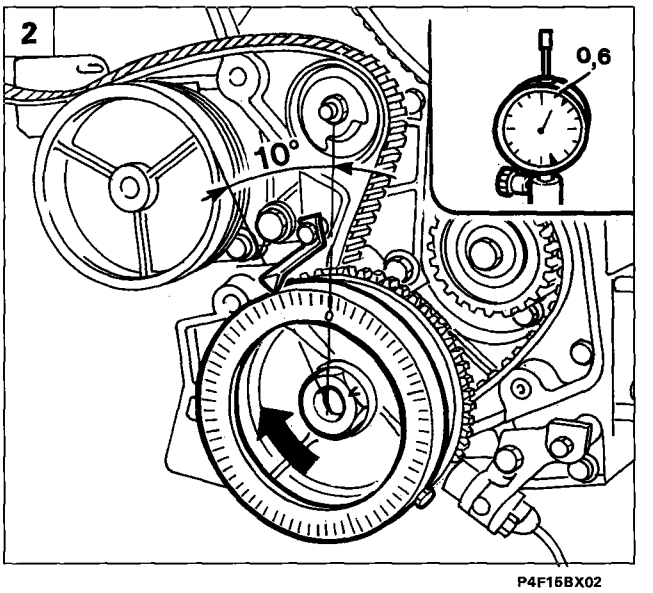

P4F15BX02

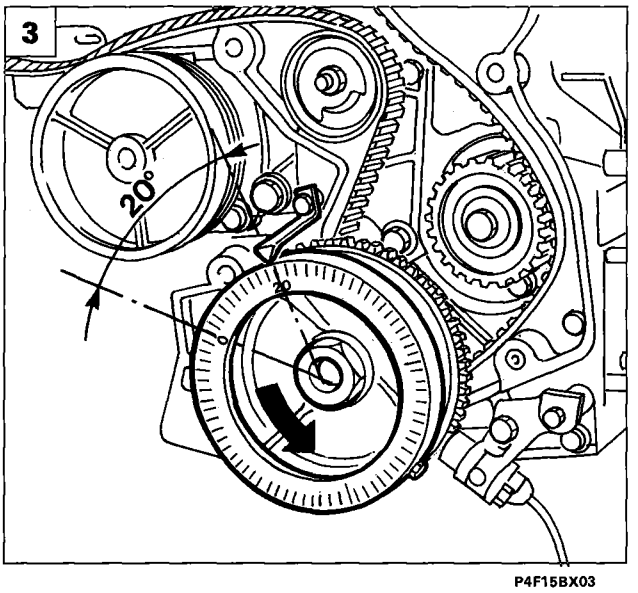

P4F15BX03

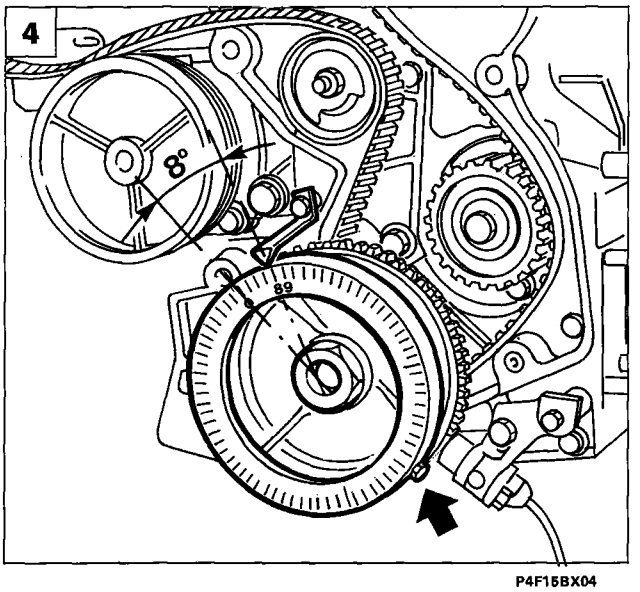

P4F15BX04

1. Fit support base of graduated disc 1860896000 onto auxiliary component drive pulley and secure to pulley using a screw. Then fit graduated disc onto its support base so that "0" on disc is aligned with the fixed pointer positioned previously.
2. Turn the crankshaft through about 10° in its normal dirction of rotation by applying a wrench to the auxiliary component drive pulley retaining nut. Measure piston axial displacement off gauge (e.g. 0.6 mm).
3. Turn the crankshaft against its direction of normal rotation by about 20° in relation to the fixed pointer. Turn crankshaft back through its normal direction of rotation until gauge shows the same axial displacement measured previously (e.g. 0.6 mm).
4. Read angular value corresponding to previous axial displacement (e.g. 8°) off the graduated disc. Take the arithmetic mean of the crankshaft angle set at the beginning of the procedure (10°) and the current value (8°). Then release the graduated disc from its base, locate at setting obtained by taking the arithmetic mean (e.g. 9° = mean of 10° and 8°) in relation to the fixed pointer without turning the crankshaft. Then tighten graduated disc again.

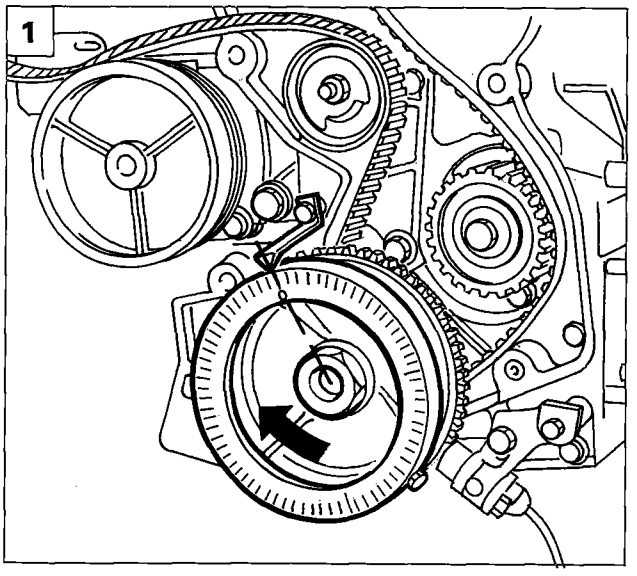

P4F16BX01

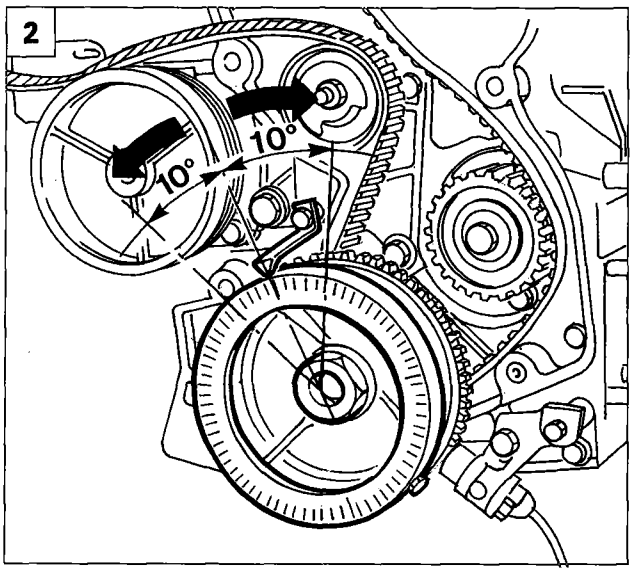

P4F16BX02

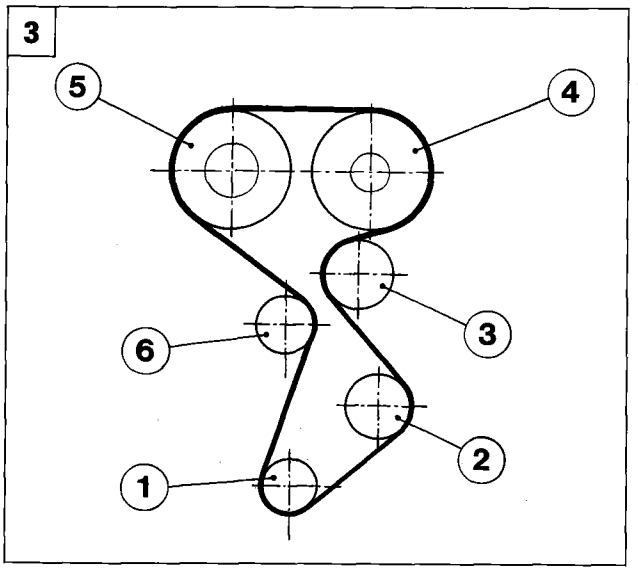

P4F16BX03

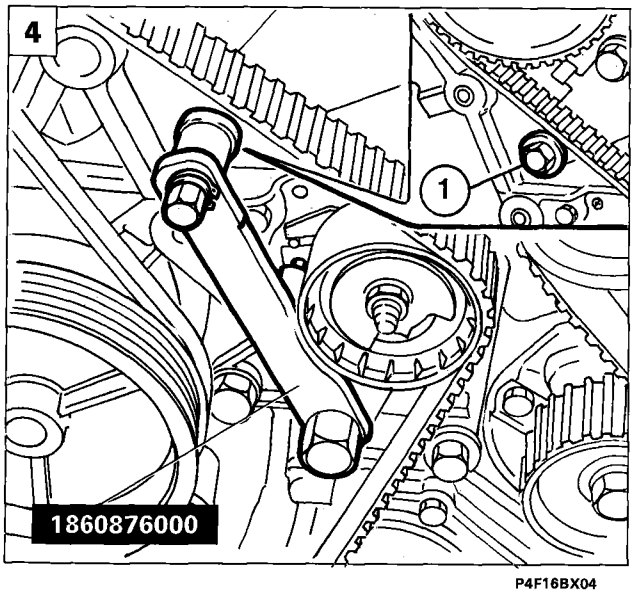

P4F16BX04

1. Turn the crankshaft pulley clockwise until "0" on graduated disc is aligned with fixed pointer.
2. Turn crankshaft through 10° clockwise and clockwise. Check on gauge that value measured when the crankshaft is turned clockwise is the same as that measured during anticlockwise rotation.

If the gauge readings after the checks carried out under point 2 are not the same, repeat the procedure on the previous pages again.

ADJUSTING TIMING BELT TENSION

3. Finish fitting the toothed belt by following these instructions in order:
   1. Crankshaft gear (already fitted)
   2. Oil pump gear
   3. Fixed guide pulley
   4. Intake end timing pulley
   5. Exhaust end timing pulley
   6. Automatic tensioner gear.

Fit belt with the belt with the camshaft pulleys turned to the right in order to take up sufficient play to fit the belt on the pulleys properly. Ensure that tension of fitted belt section is correct.

4. Remove screw (1) shown in figure in order to allow positioning of camshaft drive belt tensioning tool 1860876000.

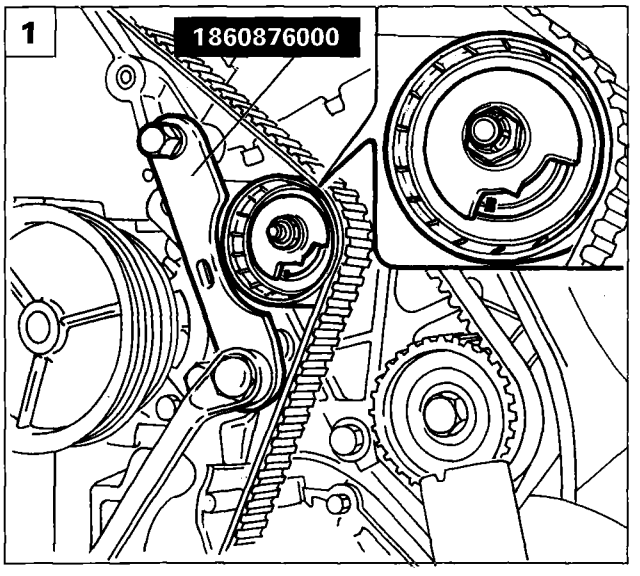

P4F17BX01

1. Adjust tensioning tool until belt tensioner is as taut as possible. Then tighten tensioner nut.

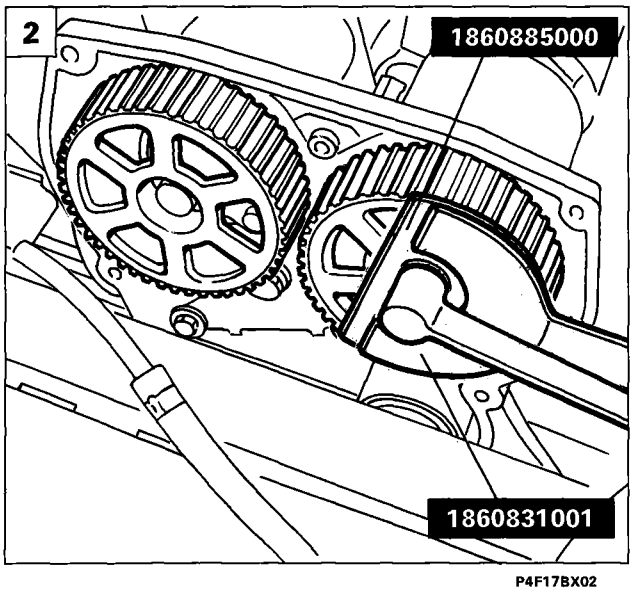

P4F17BX02

2. Remove dial gauge, then tighten camshaft drive pulleys to a torque of 11.5 daNm. Use tool 1860885000 fitted to mount 1860831001 as a reaction tool.

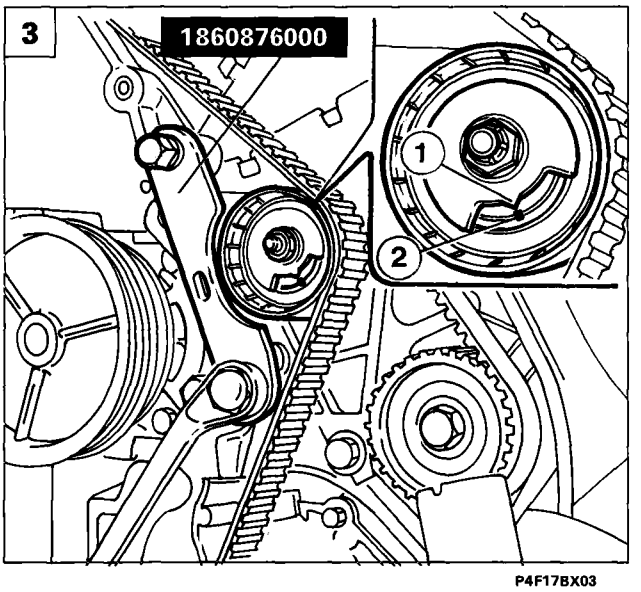

P4F17BX03

3. Remove tools 1860874000 for adjusting camshaft timing. Remove flywheel retainer and turn crankshaft through two turns in its direction of rotation. Loosen tensioner retaining nut and adjust belt tensioner nut to move pointer (1) until it is aligned with pointer (2). Then tighten belt tensioner nut to a torque of 2.3 daNm.

Refitting

As a further check, refit the gauge, measure t.d.c. and check that tools 1860874000 fit onto the timing shaft. Then refit shaft covers and parts removed previously.

10.

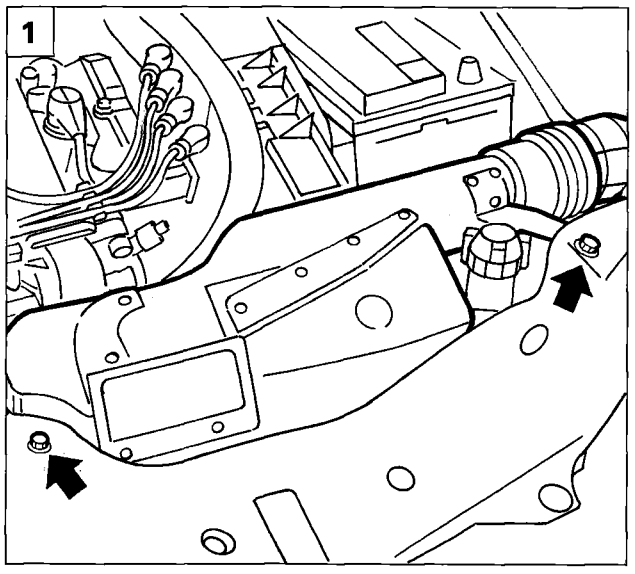

P4F01BX01

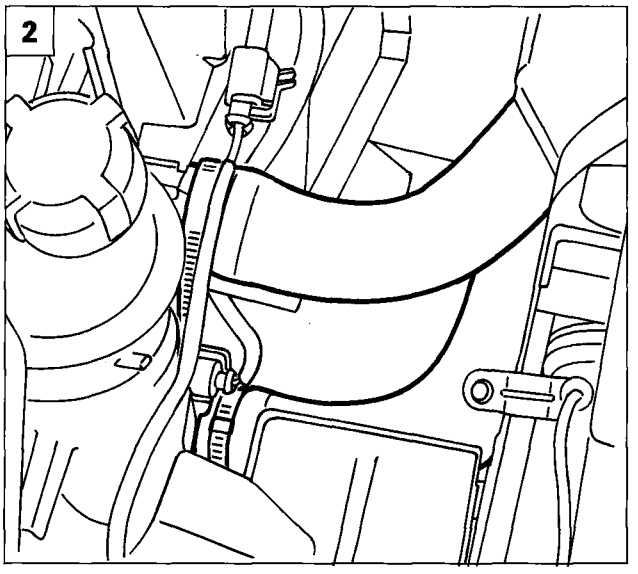

P4F01BX02

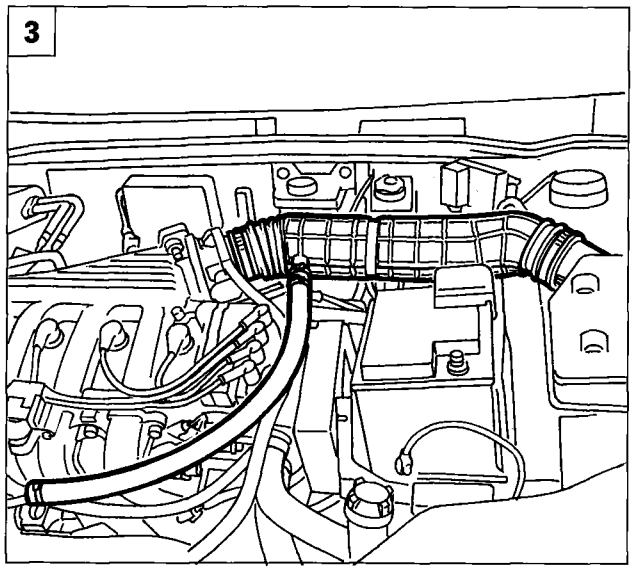

REMOVING-REFITTING CYLINDER HEAD

1. Remove air intake shroud by undoing screws shown in figure.
2. Position a suitable container in order to recover the coolant and remove the two input and output sleeves shown in the figure, which carry coolant to and from the expansion tank.
3. Remove air intake duct by undoing clips shown. Then remove from engine bay with oil vapour recovery line.
4. Lift battery positive terminal protective cover and disconnect the lead. Unscrew bolt retaining battery to holder and then remove from engine bay.
5. Remove cover of relay and fuse box.

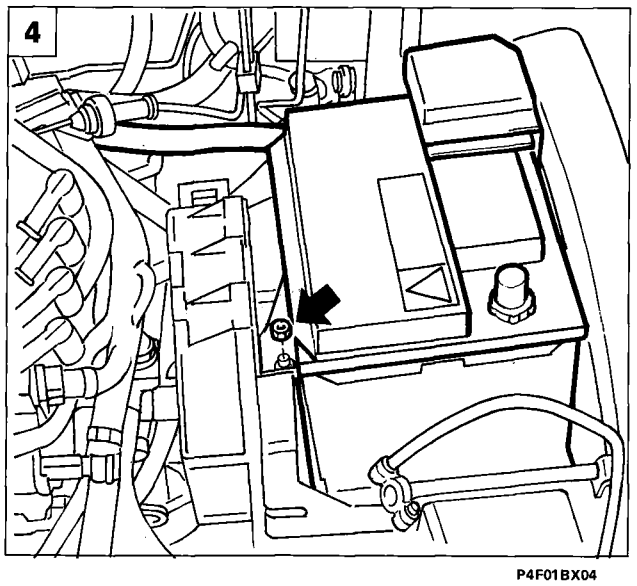

P4F01BX04

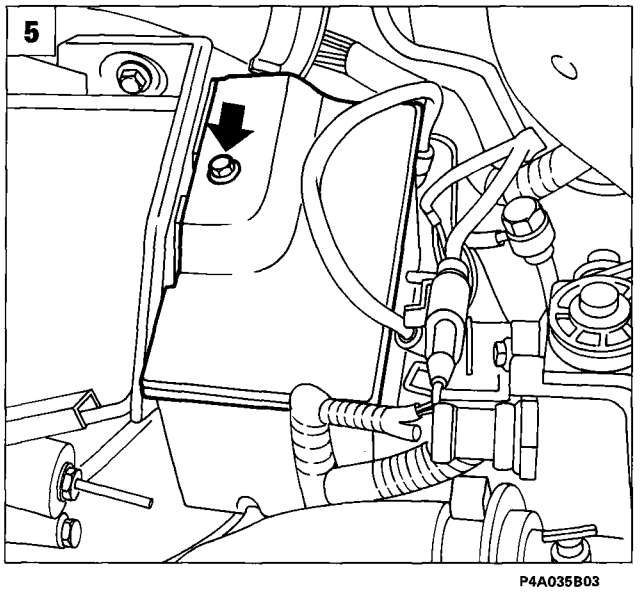

P4A035B03

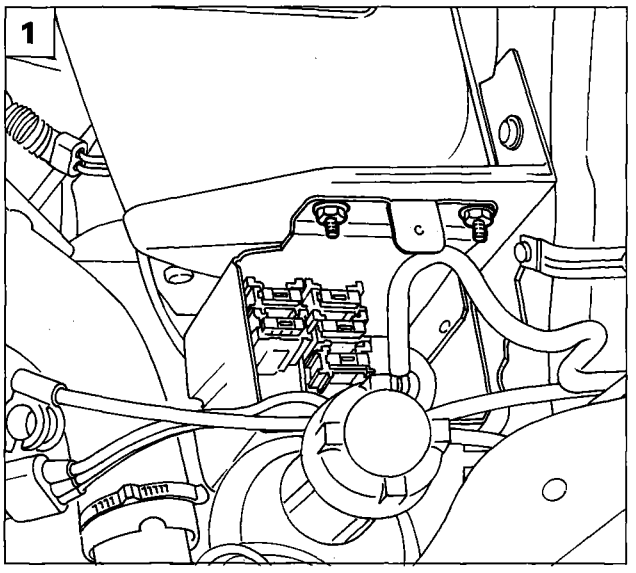

P4F19BX01

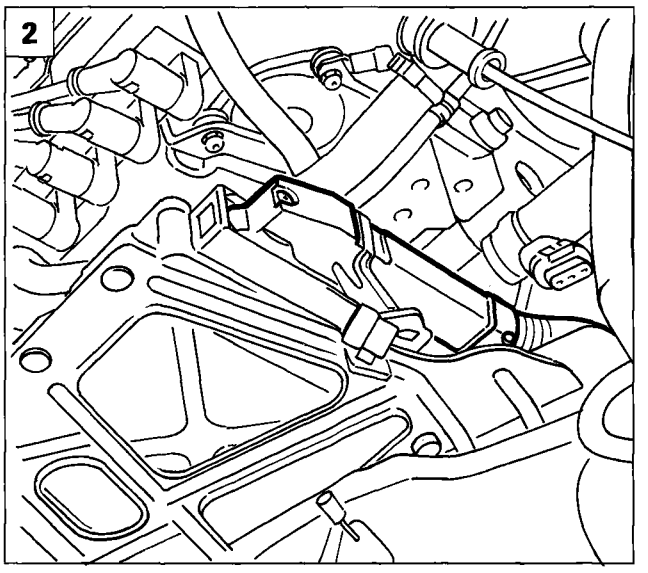

P4F19BX02

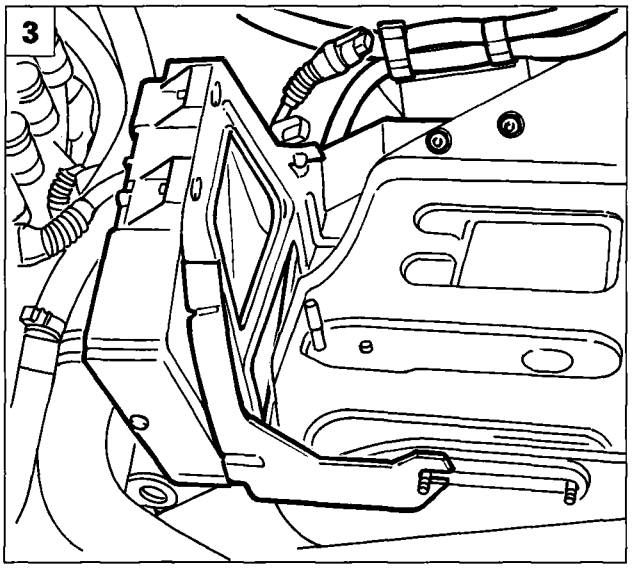

P4F19BX03

1. Remove nuts securing relay and fuse box to battery holder. Then position box to one side.
2. Disconnect i.e. ECU supply lead
3. Remove nuts retaining i.e. ECU support bracket, then remove ECU from engine bay. The nuts indiated also fasten the starter motor electrical wiring and joint between front lead and injection lead.
4. Disconnect accelerator control cable.
5. Disconnect fuel delivery and return line, evaporation control system line and absolute pressure sender unit line from the intake manifold. Remove support bracket (1) to facilitate fuel line removal.

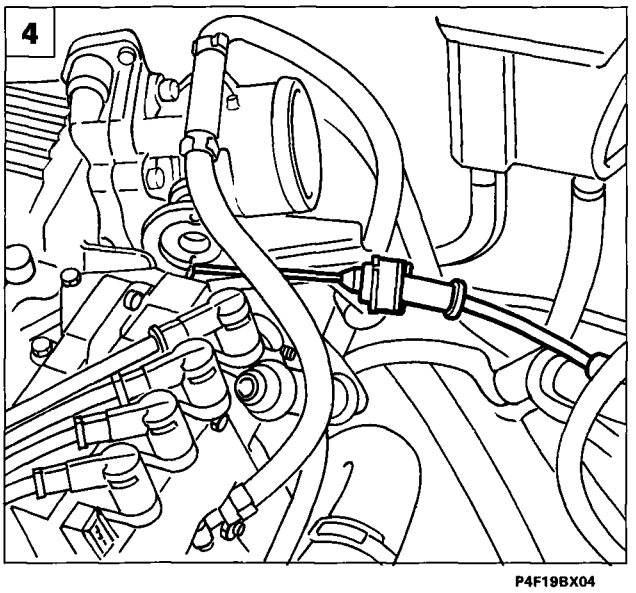

P4F19BX04

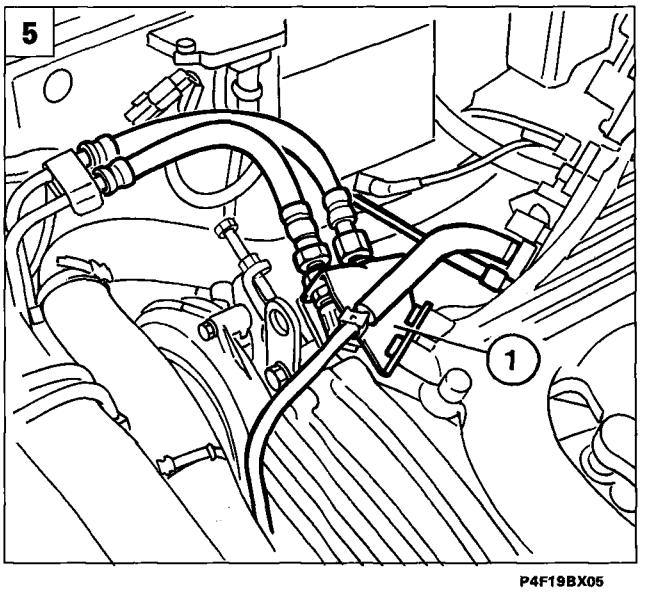

P4F19BX05

10.

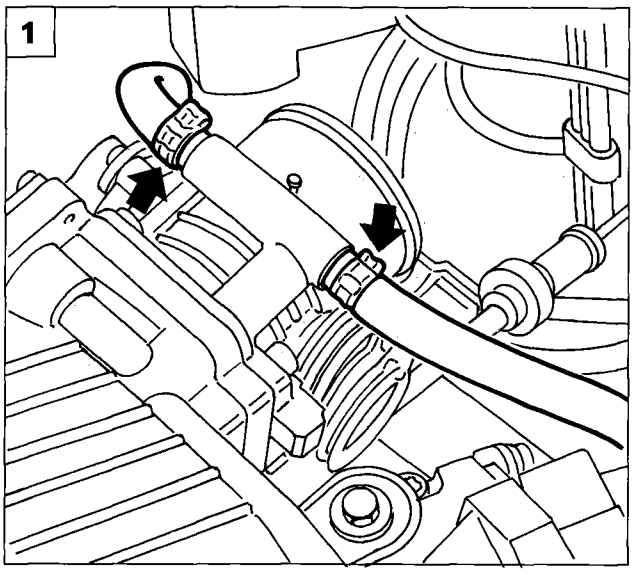

P4F20BX01

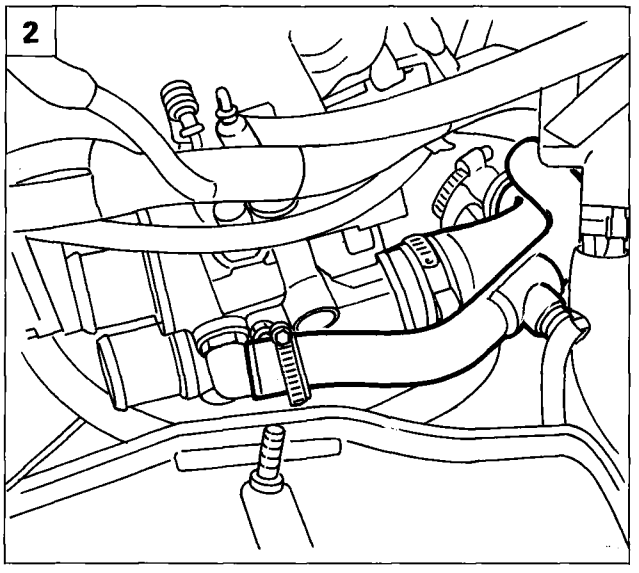

P4A20CX02

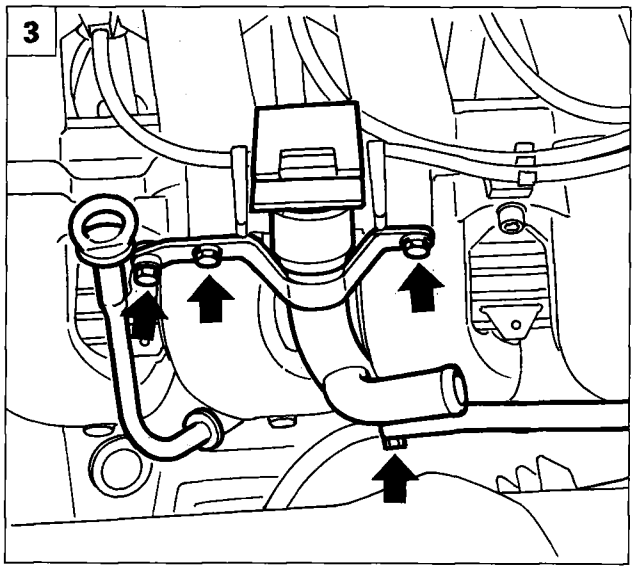

P4A20CX03

1. Remove butterfly valve case cooling lines.
2. Disconnect lines shown in figure.
3. Remove engine oil dipstick and top-up fitting by undoing screws shown in figure. Also remove oil vapour recovery line shown.
4. Remove injector supply connection and ignition coil supply lead.
5. Disconnect connections shown in figure from thermostat.

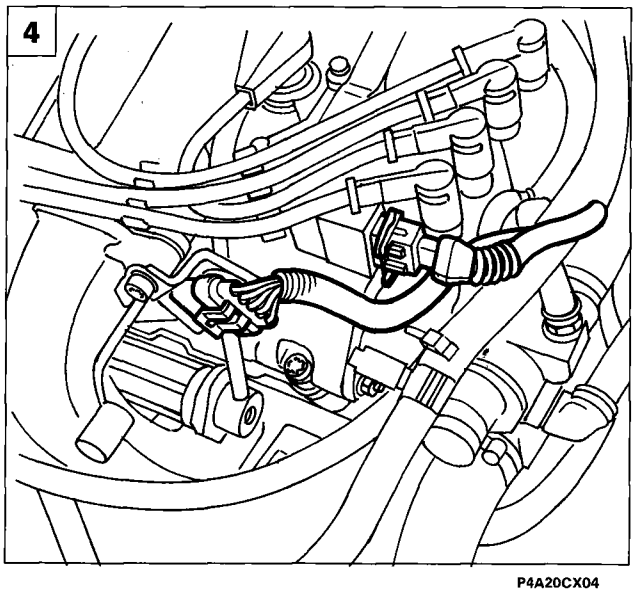

P4A20CX04

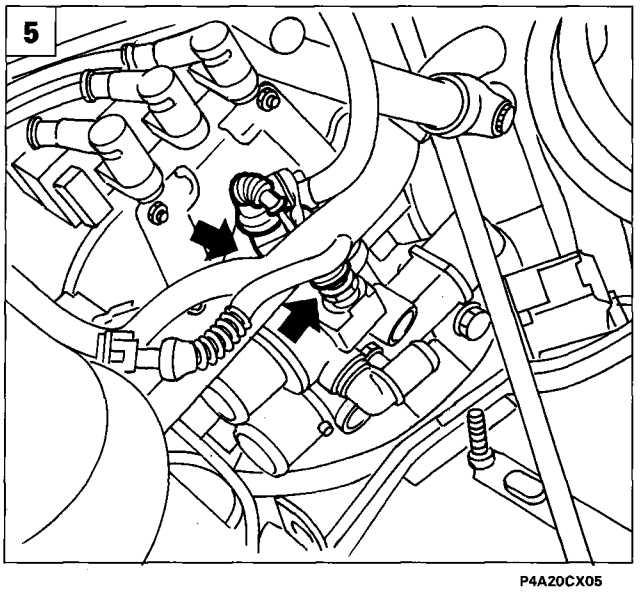

P4A20CX05

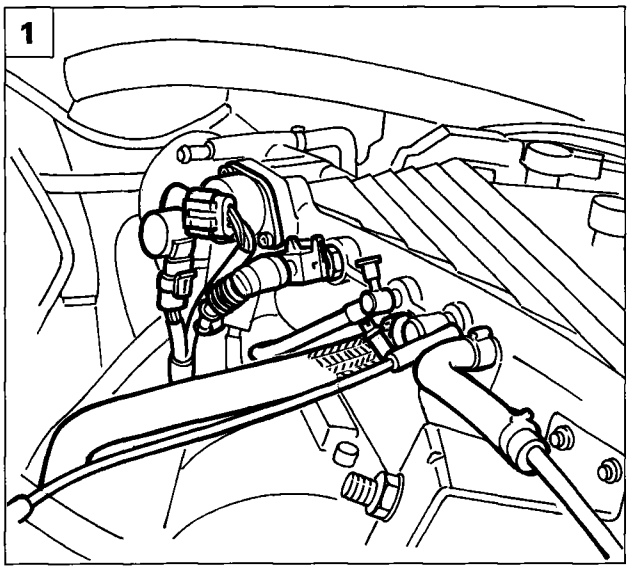

P4A21CX01

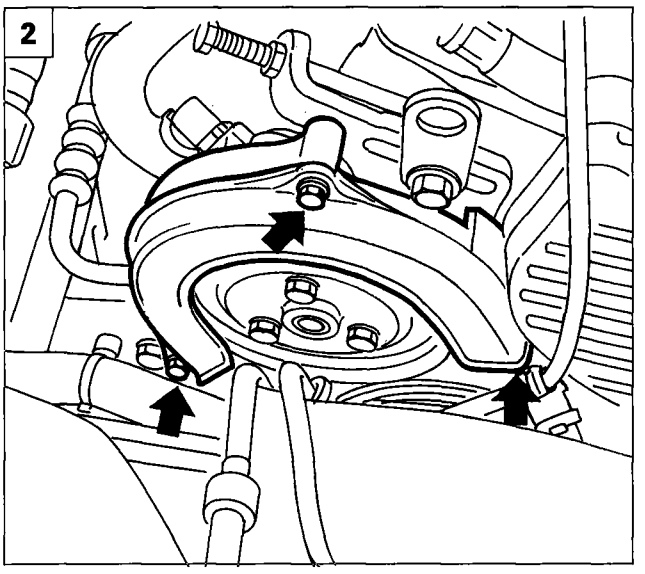

P4A10CX03

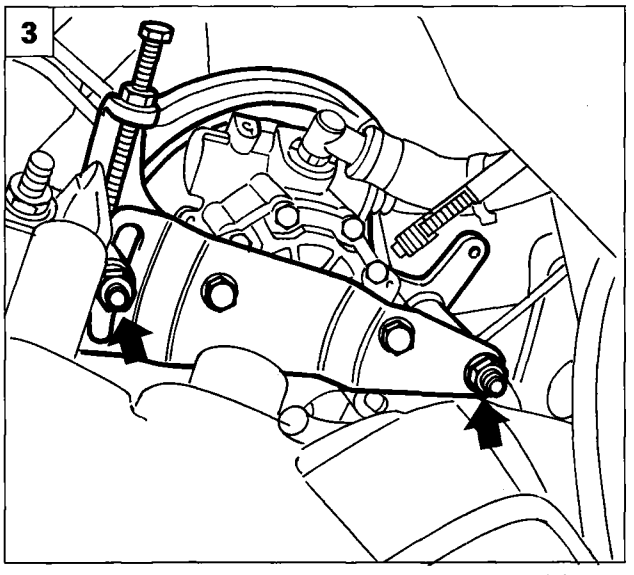

P4A21CX02

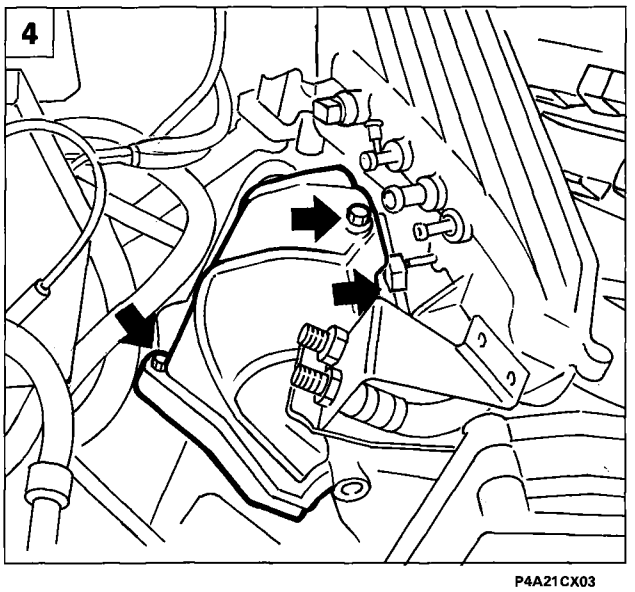

P4A21CX03

1. Disconnect idle speed actuator, air temperature sensor and throttle potentiometer connections from intake manifold. Also remove brake servo vacuum line and fuel vapour recovery lines.

2. Remove power steering pump drive belt cover.

3. Loosen tension of power steering pump drive belt, then remove pump fastenings and place to one side without disconnecting lines.

4. Remove heat shield from exhaust manifold.

Remove alternator drive belt and timing belt as described in the previous section. If the cylinder head does not require attention, position tools 1860874000 for camshaft timing adjustment as described. Otherwise the above tools may be positioned subsequently at the bench. See engine overhaul manual.

10.

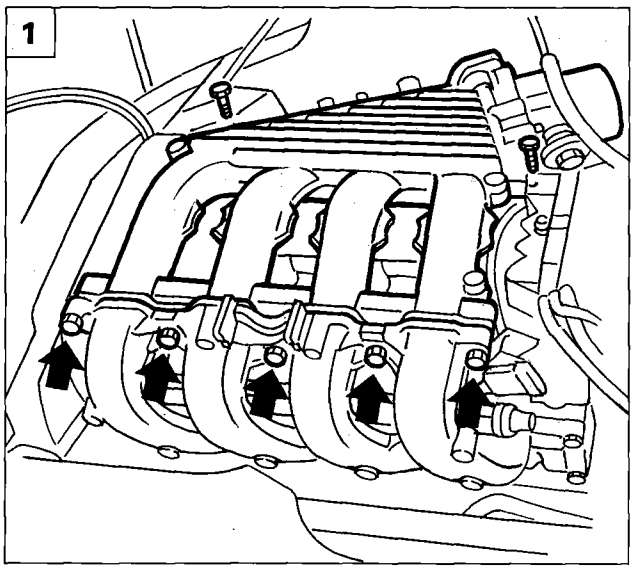

P4F22BX01

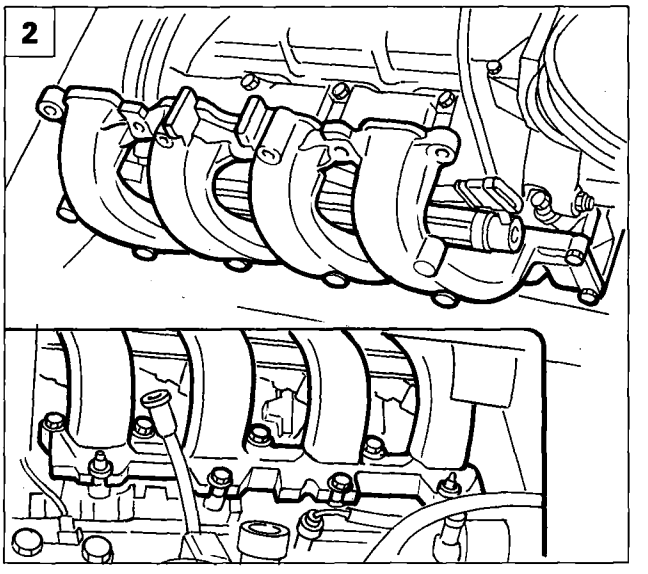

P4F22BX02

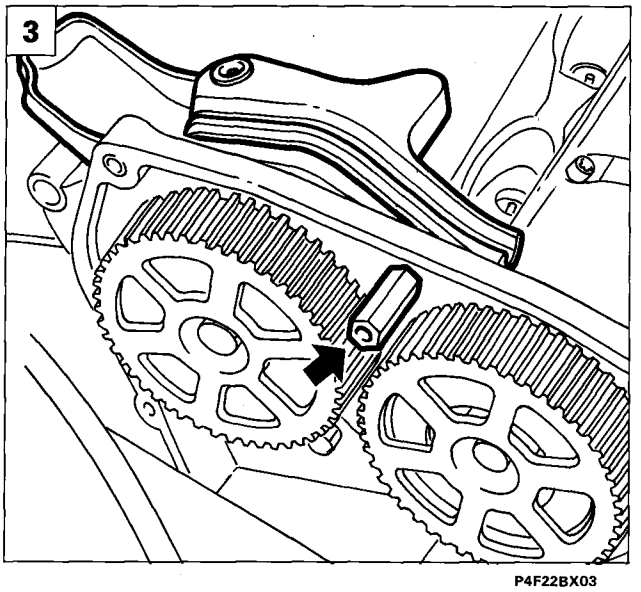

P4F22BX03

1. Remove intake casing by undoing fastenings shown.
2. Remove intake manifold by undoing fastenings indicated. Remove complete with fuel delivery manifold to injectors and the injectors themselves.
3. Remove fuel line plastic mount by undoing hexagonal screw shown in figure.
4. Remove camshaft pulleys, using tool 1860885000 fitted to base 1860831001 as a reaction tool.
5. Remove rear camshaft cover and fixed guide pulley by undoing at points shown in the figure.

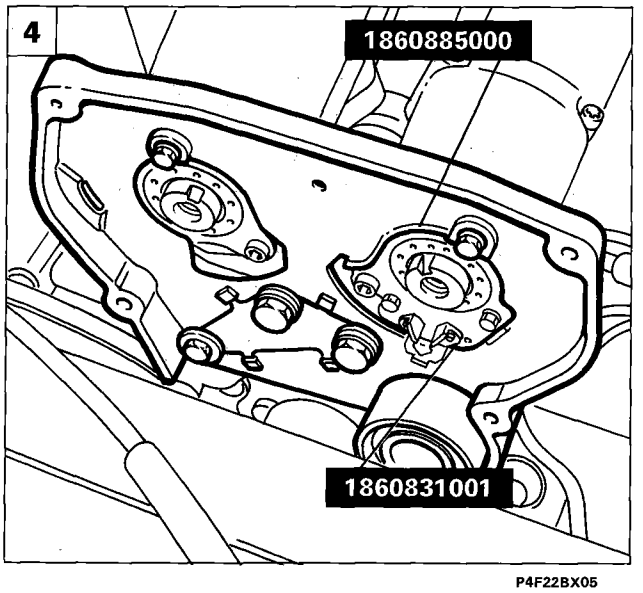

P4F22BX05

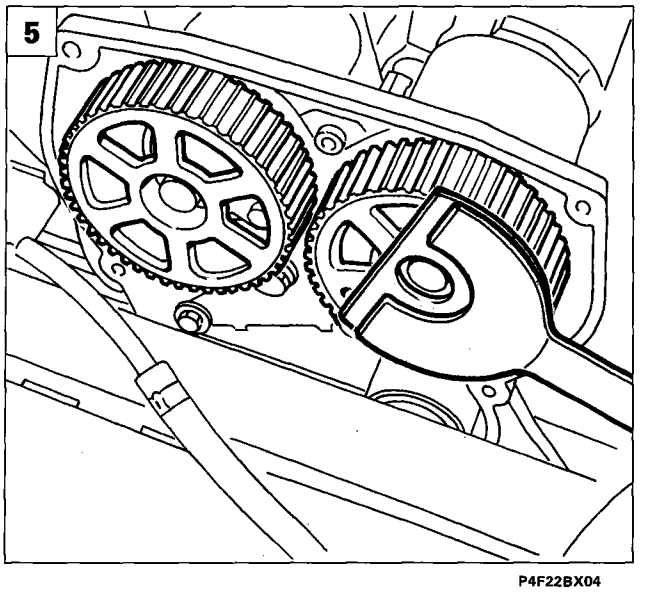

P4F22BX04

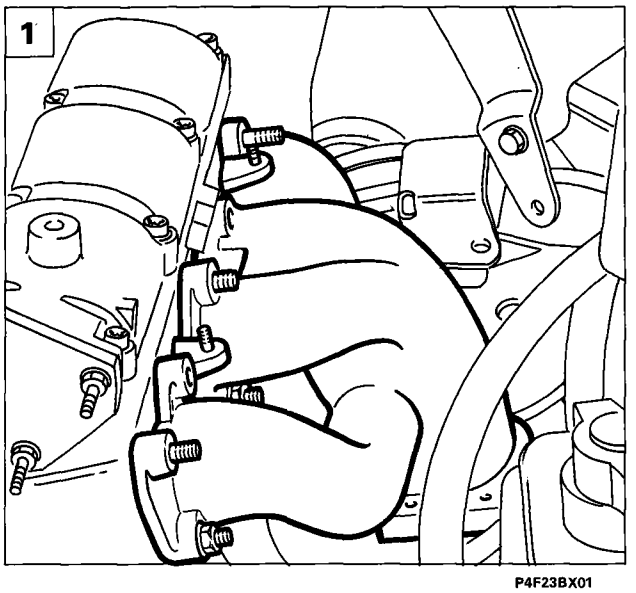

P4F23BX01

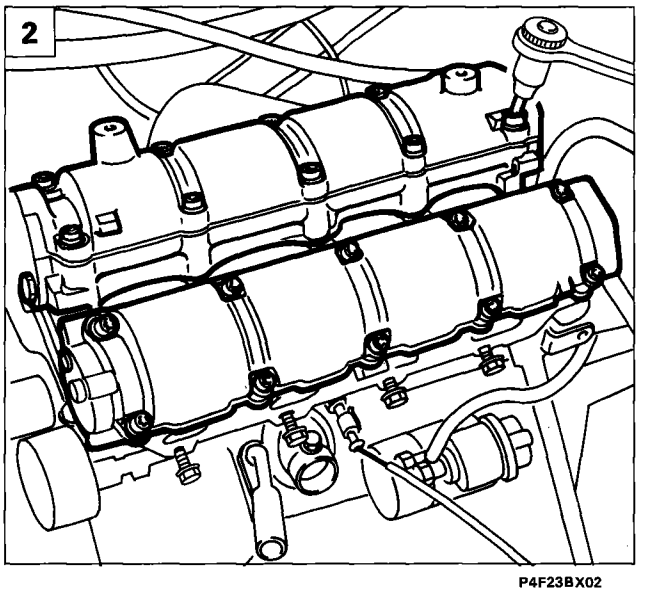

P4F23BX02

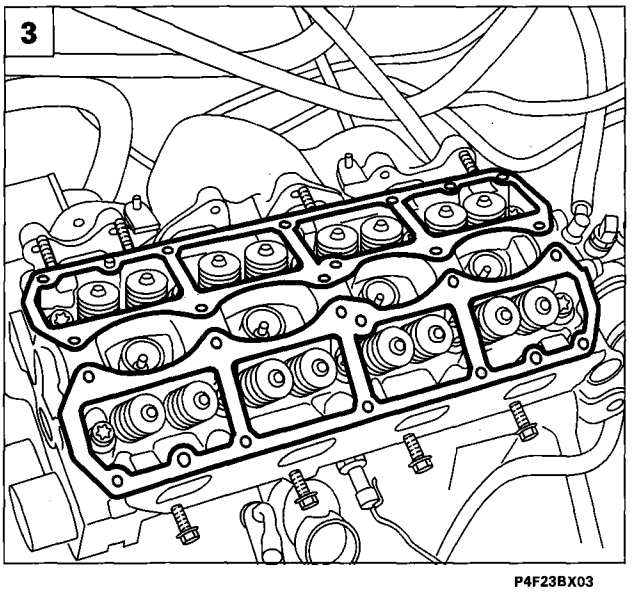

P4F23BX03

1. Remove fastenings securing exhaust manifold to cylinder head, then remove manifold from retaining studs.
2. Remove head extension.
3. Remove head extension gaskets.
4. Remove cylinder head retaining bolts using wrench 1852157000.

Refitting

5. Position cylinder head gasket with the wording "ALTO" facing the operator.

The cylinder head gasket is ASTADUR type. This type of gasket is made from a special material which undergoes a process of polymerisation while the engine is running and therefore hardens considerably during use.

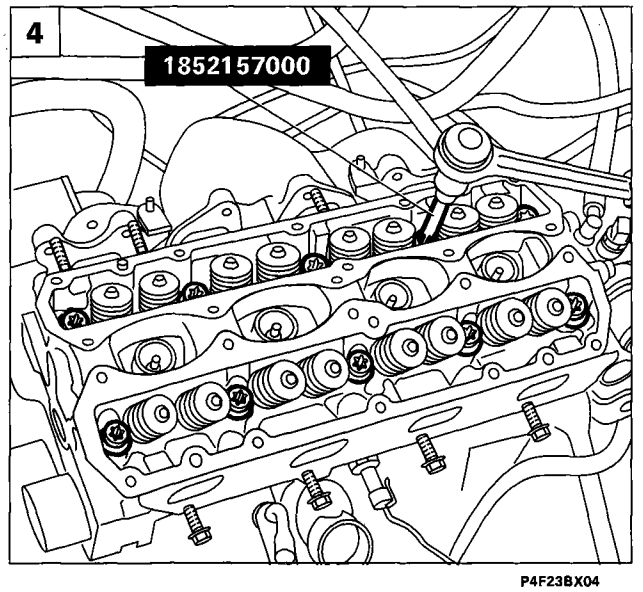

P4F23BX04

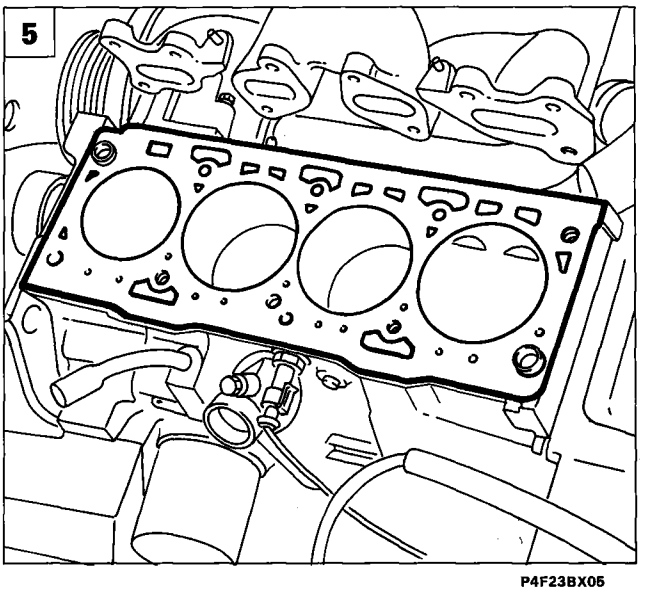

P4F23BX05

10.

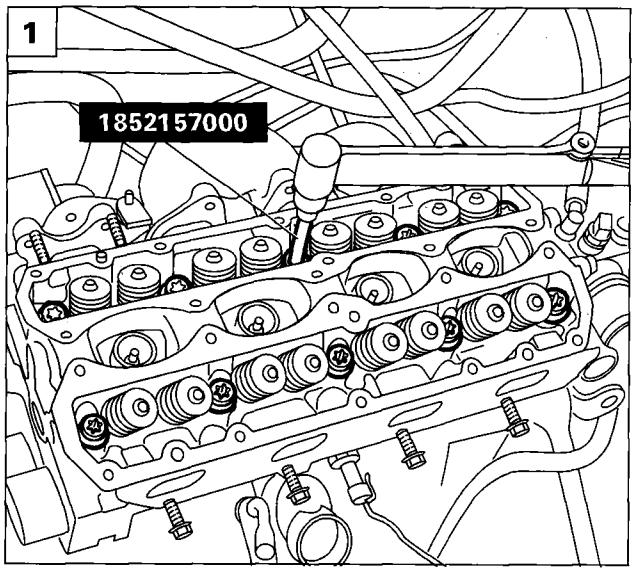

P4F24BX01

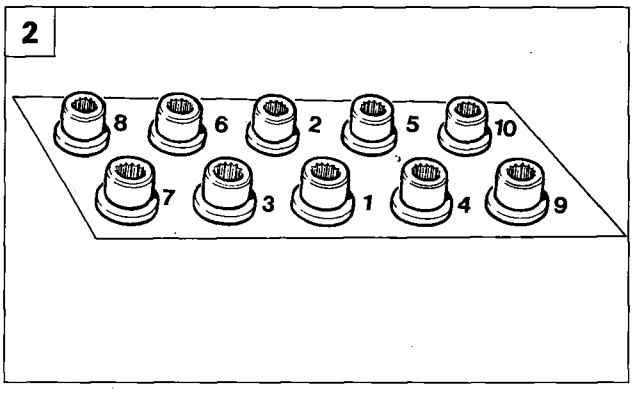

P4F24BX02

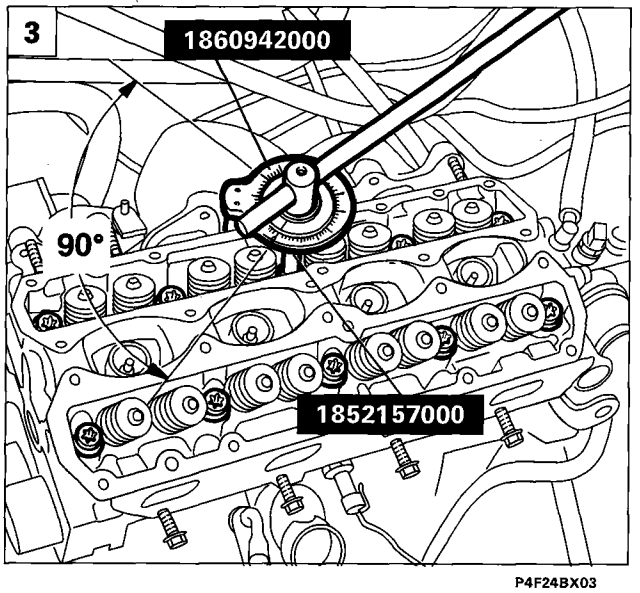

P4F24BX03

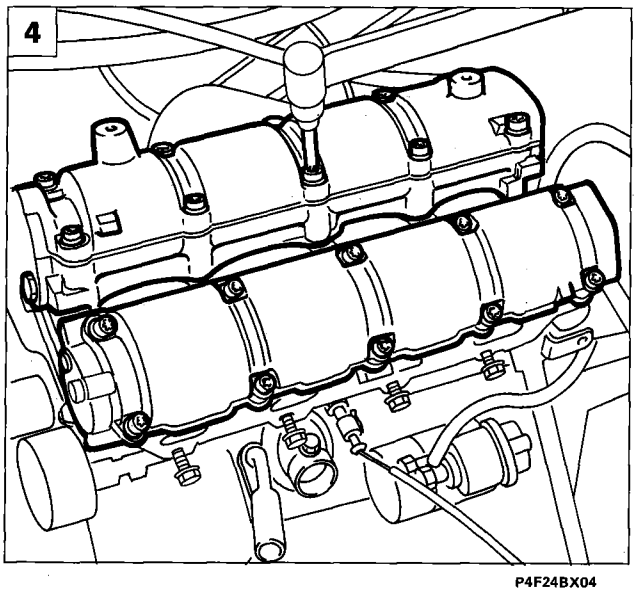

P4F24BX04

The following conditions must be satisfied in order to ensure polymerisation occurs:

- *keep the gasket sealed in its plastic bag;*
- *take out only shortly before fitting;*
- *do not oil the gasket or contaminate with oil. Ensure cylinder head and crankcase surfaces are thoroughly clean.*

1-2. Fit the cylinder head and use tool 1852157000 to tighten retaining screws to a torque of 2 daNm. Observe the tightening pattern shown in the figure. Then tighten bolts to a torque of 4 daNm, following the same pattern.

3. Use wrench 1852157000 with tool 1860942000 to tighten cylinder head bolts through a further angle of 180° in two different stages(90°+ 90°), following the same tightening pattern.

4. Fit cylinder head extensions and tighten bolts to specified torque.

Refit the remaining parts by reversing disassembly instructions. Fit timing and auxiliary belts and tension as described in the previous paragraphs.

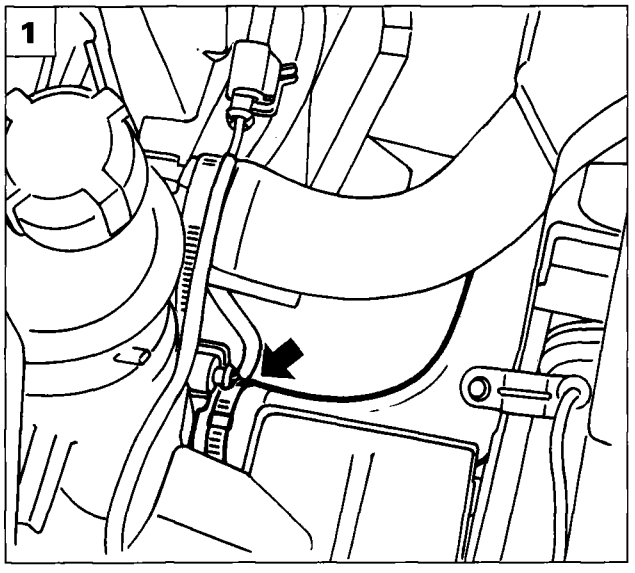

P4F25BX01

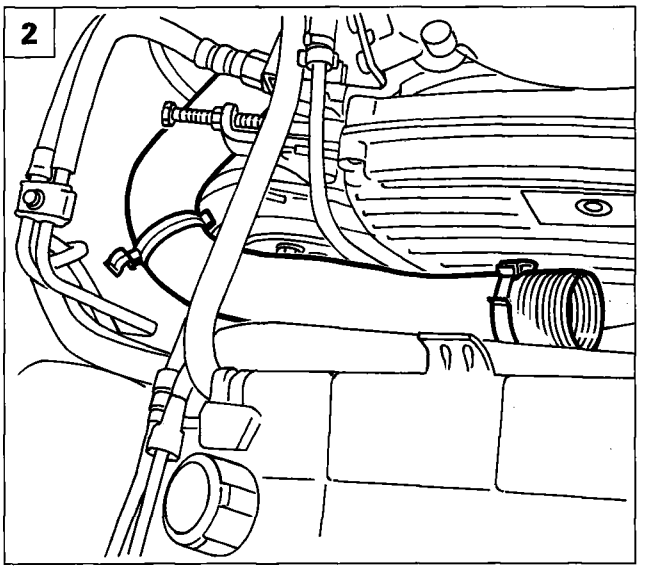

P4F25BX02

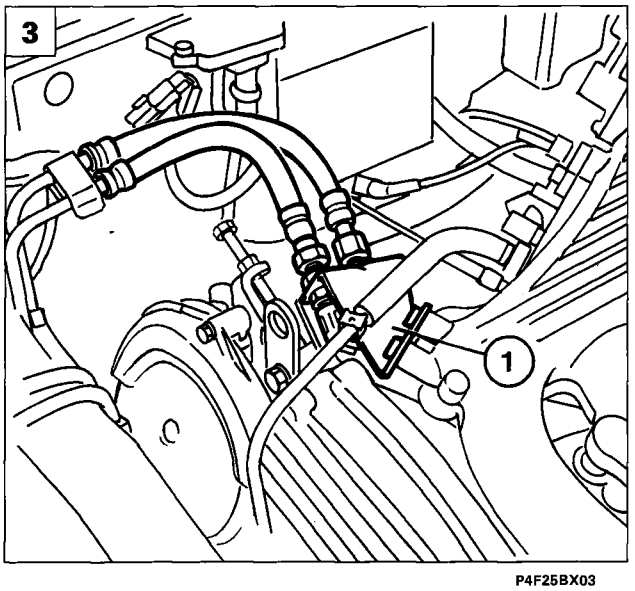

P4F25BX03

REMOVING-REFITTING COOLANT PUMP

1. Drain the coolant by removing lower radiator outlet line.

Remove alternator-coolant pump drive belt as described in previous sections.

2. Remove air intake line shown in figure.
3. Disconnect fuel delivery and return lines. Remove support bracket (1) to facilitate removal.
4. Remove power steering pump drive belt cover.
5. Slacken tension in power steering pump drive belt, then remove pump fastenings and place to one side without disconnecting pipes.

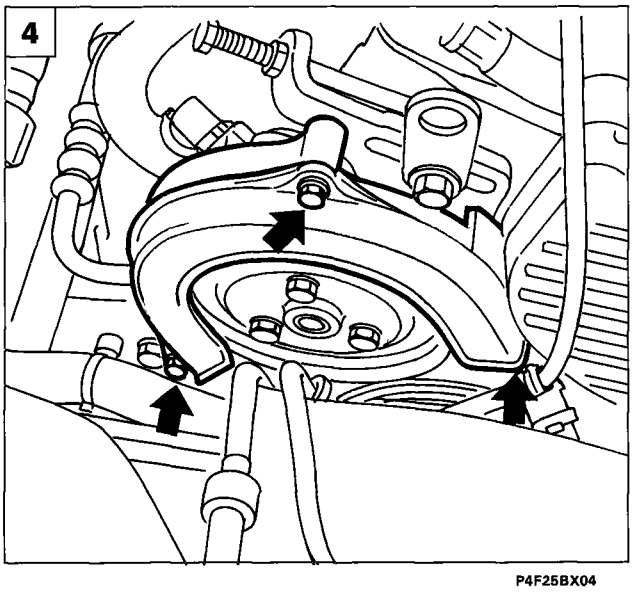

P4F25BX04

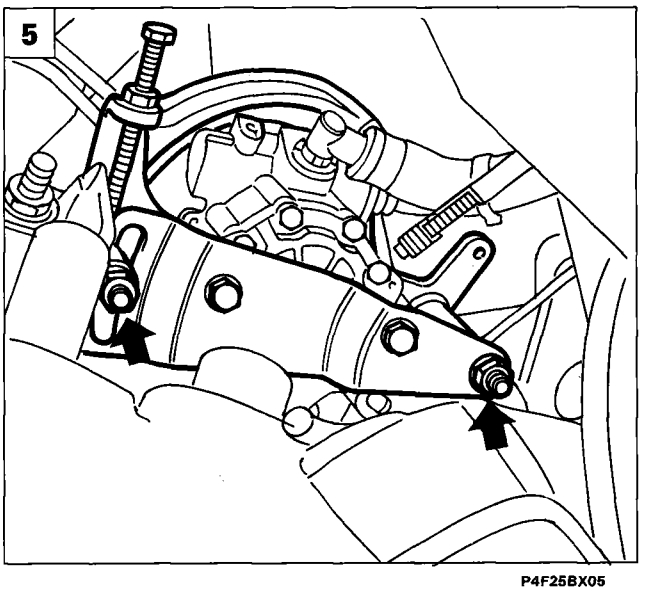

P4F25BX05

Copyright Fiat Auto

Removing-refitting coolant pump

10.

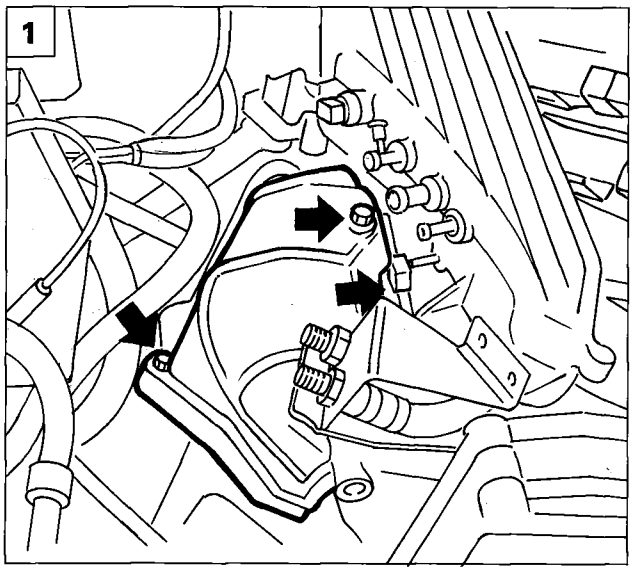

P4A21CX03

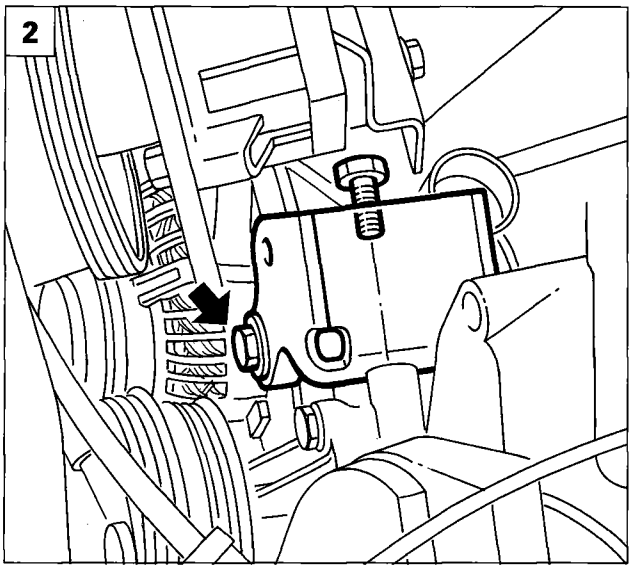

P4A26CX01

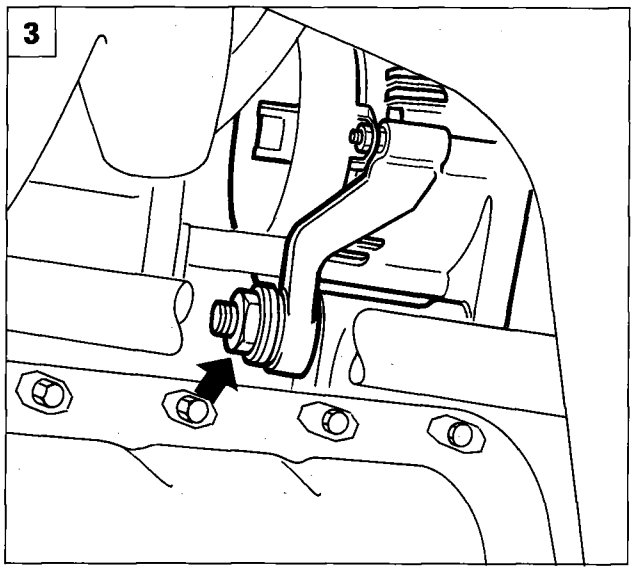

P4A26CX02

1. Remove heat shield from exhaust manifold.
2. Remove upper alternator retaining bracket.
3. Loosen lower alternator retaining bolt so that alternator can be turned to gain access to coolant pump fastening.
4. Remove delivery line for coolant under pressure from coolant pump.
5. Unscrew coolant pump fastenings and remove from engine bay.

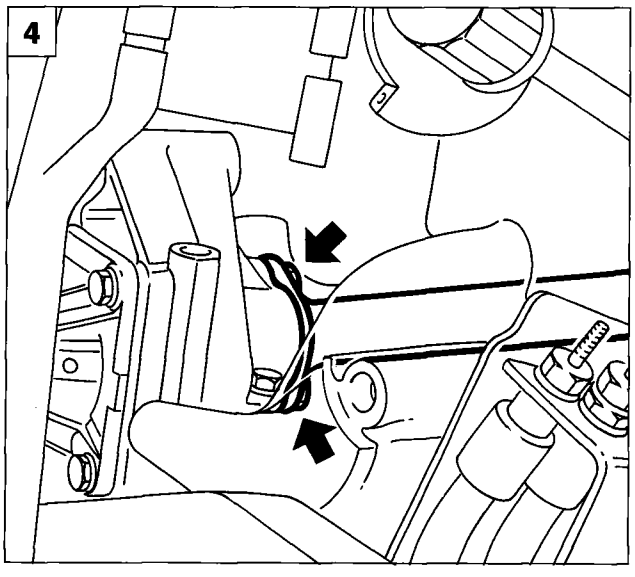

P4A26CX03

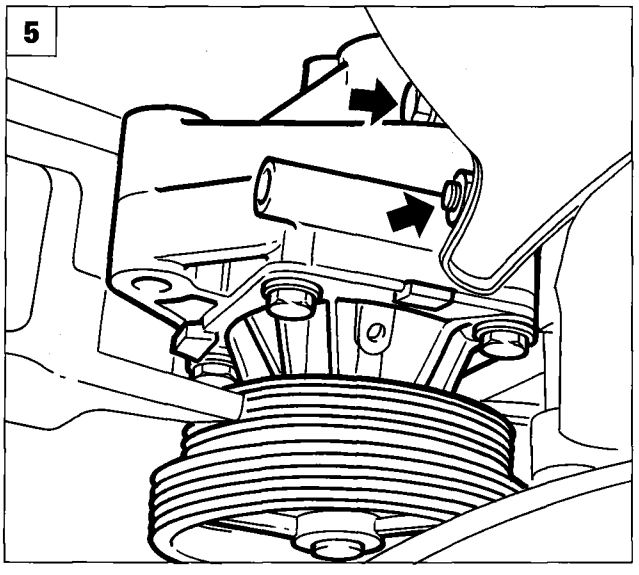

P4A26CX04

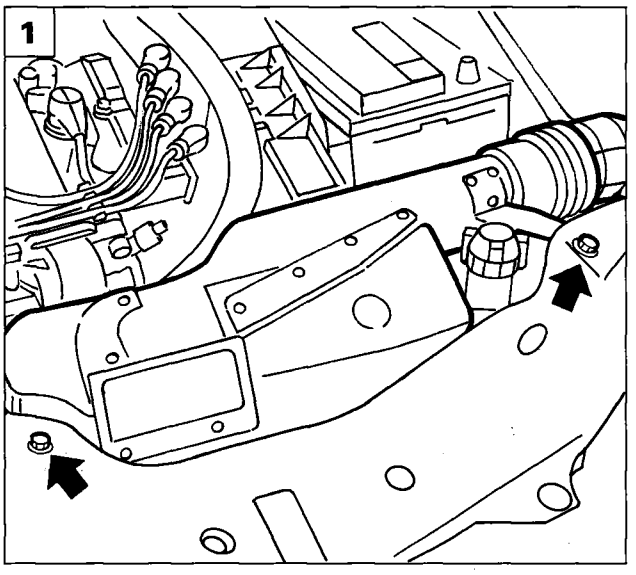

P4F27BX01

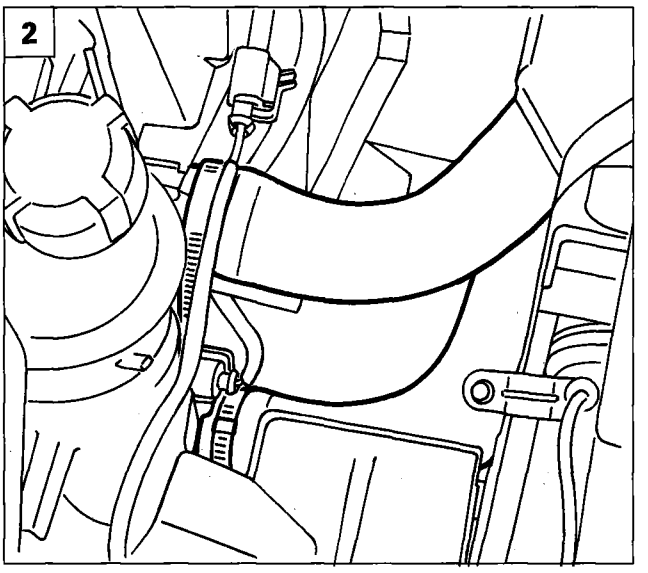

P4F27BX02

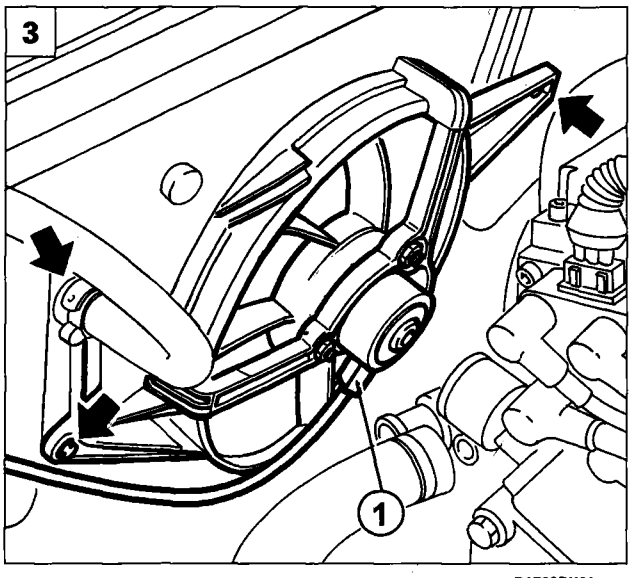

P4F03BX01

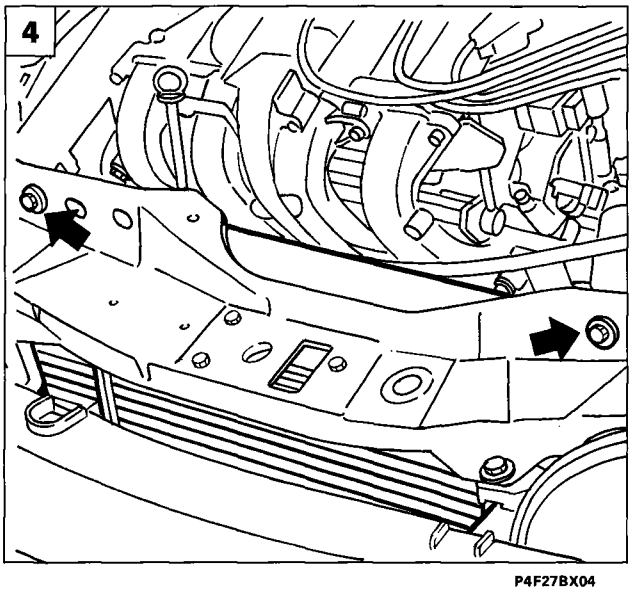

P4F27BX04

REMOVING-REFITTING RADIATOR

1. Disconnect battery negative lead, then remove air intake shroud by undoing bolts shown in figure.
2. Position a suitable container to collect coolant and remove the two sleeves shown in the figure, which carry coolant to and from the expansion tank.
3. Remove the fan by undoing the retaining screws. Take care to disconnect supply connections.
4. Remove bolts shown in figure, which secure radiator to front beam. Then lift the radiator up out of the engine bay.

10.

COOLING SYSTEM FILLING PROCEDURE (heated version)

- Ensure all cooling system components (engine, heater, radiator etc.) are completely empty before beginning filling procedure.
- Open the bleed fitting (A) on radiator and bleed fitting (B) on radiator outlet sleeve and pull sleeve (C) connecting thermostat - butterfly valve case from the side of the butterfly valve case.
- Slowly pour in fluid (mixture consisting of 50% water and 50% paraflù), until the fluid emerges from bleed fitting (A) on the radiator, then tighten fitting.
- Continue to pour in fluid until it emerges from bleed fitting (B) located on heater sleeve, (now level will be higher than MAX mark on built-in expansion tank). Then tighten fitting (B).
- Reconnect sleeve (C) between thermostat and butterfly valve case. Draw off any fluid above the MAX level mark.
- Start up engine and leave to idle.
- Return the engine to idle speed and unscrew bleed fitting (A) on the radiator (with care because the coolant is hot) to allow any residual air to escape)
- Gradually increase the engine speed until fluid emerges from bleed fitting (A). Then close the hole and allow engine speed to return to idling level.
- Wait until the fan has come on at least twice, and then turn off.
- The fluid level should settle between the MIN and MAX notches on the expansion tank. Top up if necessary, but do not exceed the MAX level.

NOTE *If the coolant boils during the operations described above, stop the procedure in order to find the defective component and replace it. Then repeat the filling procedure.*

COOLING SYSTEM FILLING PROCEDURE (version with a/c)

- Ensure all cooling system components (engine, heater, radiator etc.) are completely empty before beginning filling procedure.
- Open bleed fitting (A) on the radiator and bleed fitting (B) on the heater outlet sleeve.
- Disconnect sleeve (C); blow compressed air into the sleeve to empty the bleed pipes completely. Reconnect the sleeve when the operation is complete.
- Slowly pour in fluid (mixture consisting of 50% water and 50% paraflù), until the fluid emerges from bleed fitting (A) on the radiator, then tighten fitting.
- Continue to pour in fluid until it emerges from bleed fitting (B) located on heater sleeve, then close the fitting.
- Continue filling until the fluid reaches the MAX mark shown on the reservoir
- Start up engine and leave to idle for 2 or 3 minutes.
- Pump the accelerator every 30 seconds to take engine speed gradually up to 4000 rpm. Simultaneously pour coolant into the expansion tank: ensure the level does not exceed the MAX mark).
- Continue this procedure until the radiator cooling fan has come on at least twice.
- Leave the engine to cool until the coolant temperature is no higher than 25°C. Then top up to half way between the MAX and MIN marks indicated on the expansion tank.

NOTE *If the fluid boils during the operations described previously, stop the procedure in order to find the defective component and replace it. Then repeat the filling procedure.*

Engine cooling circuit bleed screw positions (heated and air conditioned version)

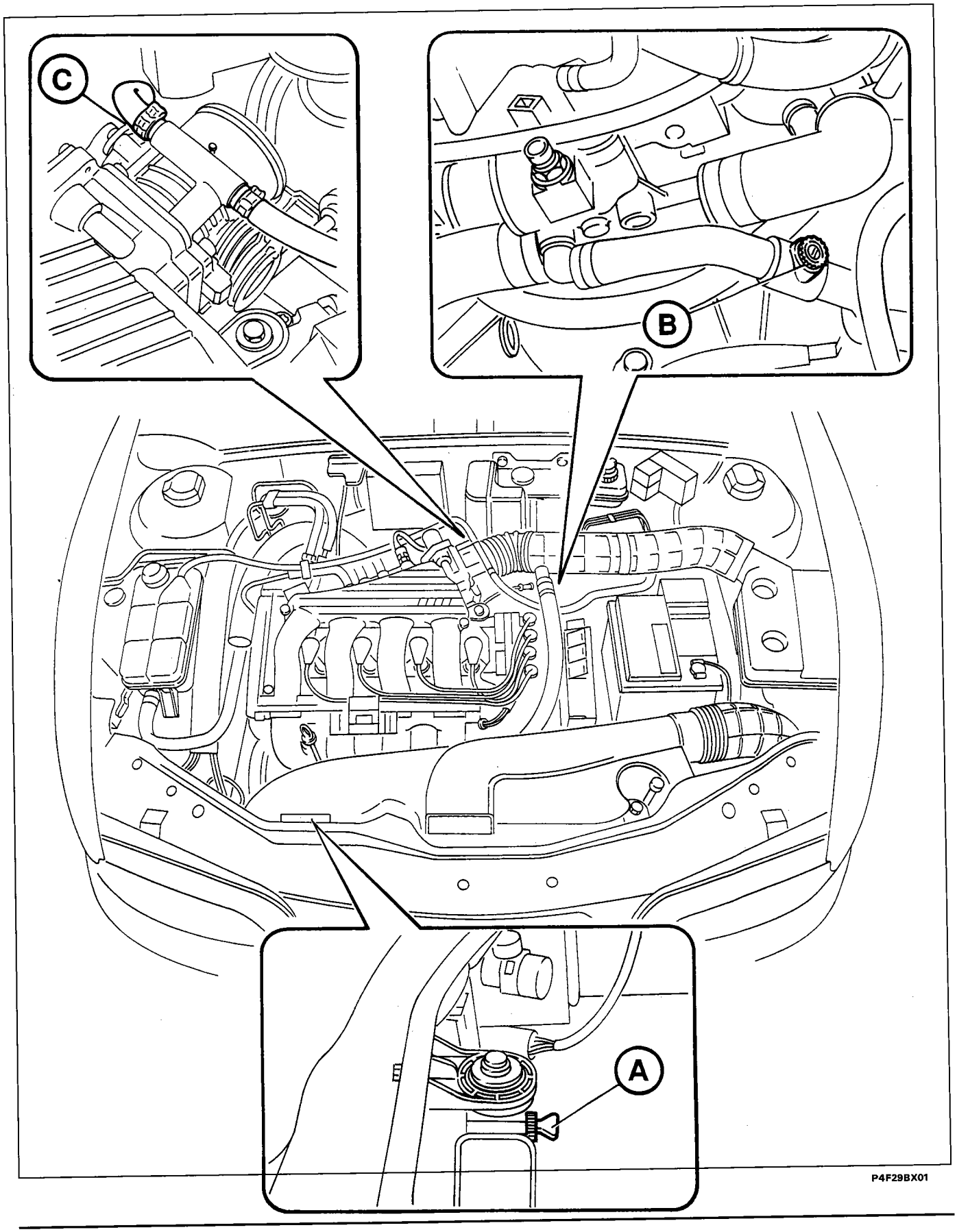

Copyright Fiat Auto

page

REMOVING-REFITTING

- Removing-refitting power unit 1

REPLACING AUXILIARY SHAFT BELT

- Removing-refitting auxiliary shaft drive belt 10

REPLACING TIMING BELT

- Removing-refitting timing drive belt 11

REMOVING-REFITTING CYLINDER HEAD

- Removing-refitting cylinder head 17

REMOVING-REFITTING WATER PUMP

- Removing-refitting water pump 22

REMOVING-REFITTING RADIATOR

- Removing-refitting radiator 23
- Procedure for filling the engine cooling circuit (versions with heater) 24
- Procedure for filling the engine cooling circuit (version with air conditioning) 26

Copyright by Fiat Auto

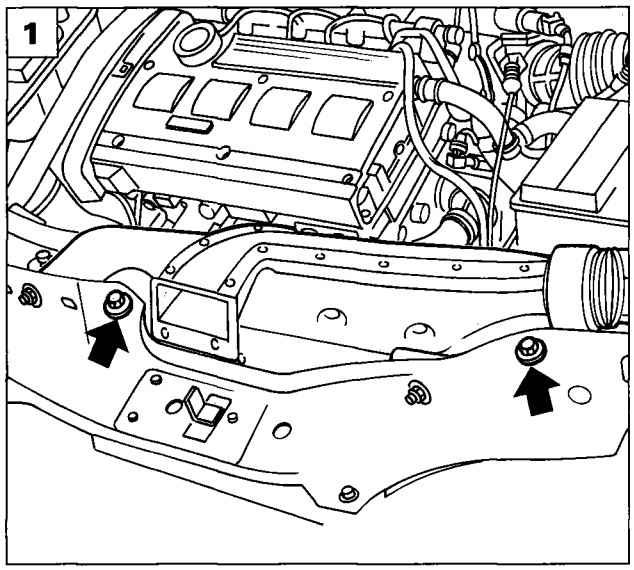

P4F01CX01

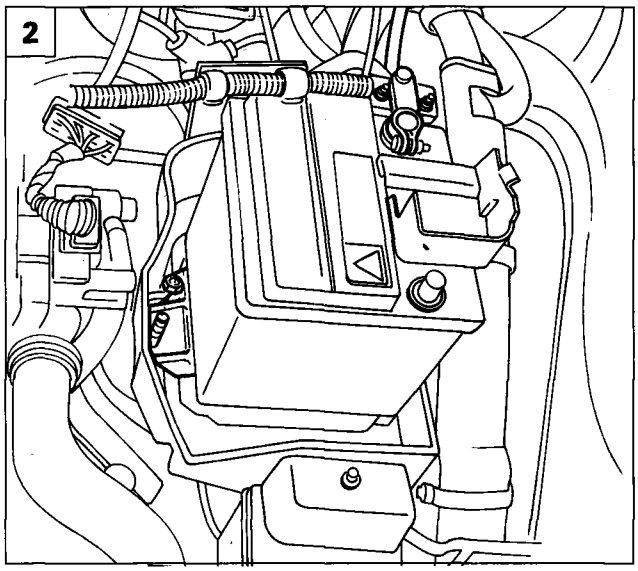

P4F01CX02

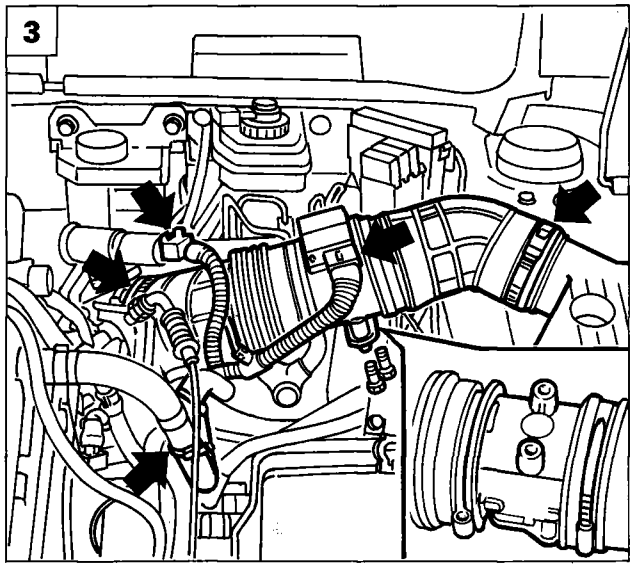

P4F01CX03

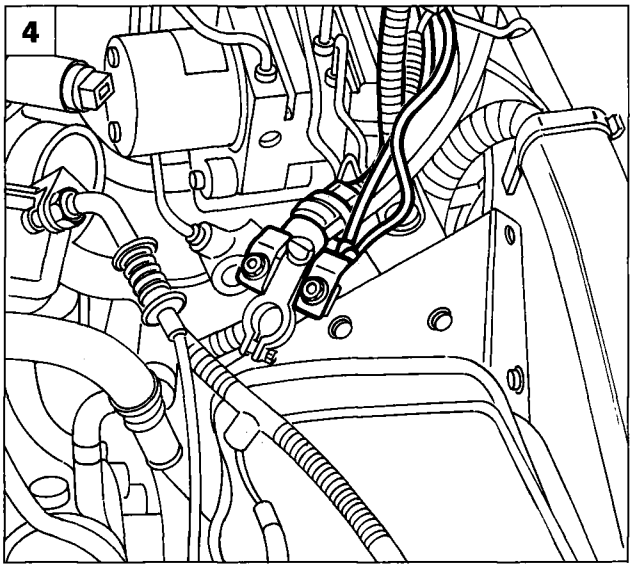

P4F01CX04

REMOVING-REFITTING POWER UNIT

Position the vehicle on a lift, disconnect the negative lead from the battery, remove the front wheels, then proceed as illustrated below:

1. Disconnect the air inlet duct acting on the bolts shown in the diagram which fix it to the front cross member.
2. Lift the protective cover for the positive pole, then disconnect the relevant cable; undo the nut fixing the battery to the drip tray and remove it from the engine compartment.
3. Remove the air inlet duct complete with flow meteracting on the bands shown in the diagram, taking care to disconnect the appropriate electrical connection.
4. Undo the nuts fixing the cables shown in the diagram to the positive battery terminal.

Copyright by Fiat Auto

10.

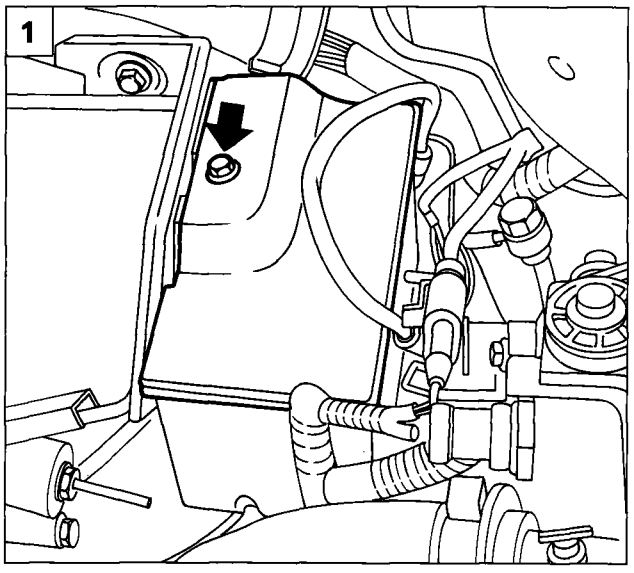

P4F02CX01

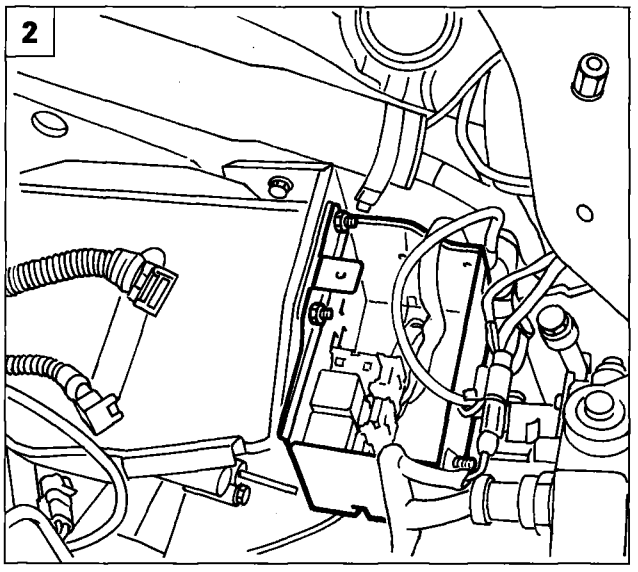

P4F02CX02

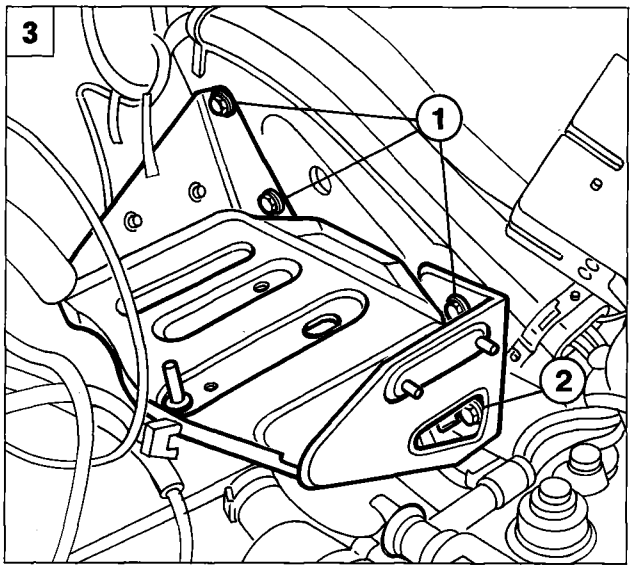

P4F02CX03

1. Remove the cover for the air conditioning relay and fuse box acting on the bolt shown.
2. Remove the nuts fixing the air conditioning relay and fuse box to the battery drip tray, then position the box to one side.
3. Remove the bolts (1) and loosen the bolt (2) fixing the battery drip tray to the bodyshell.
4. Disconnect the accelerator cable.
5. Disconnect the two injection cable/from cable couplings shown in the diagram.

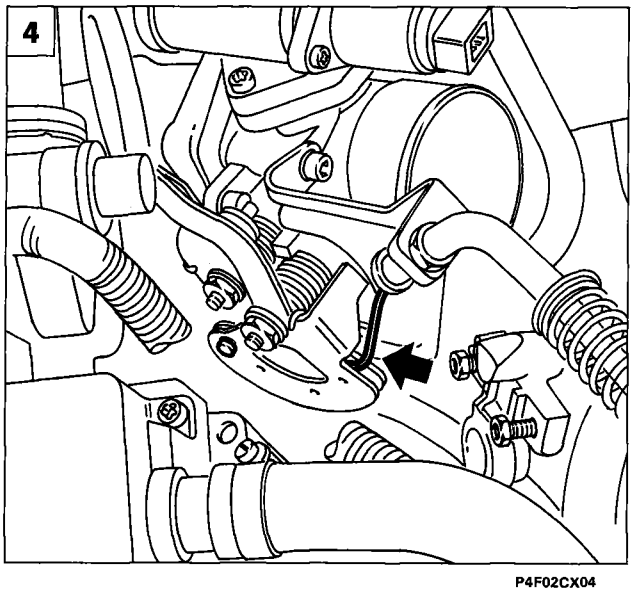

P4F02CX04

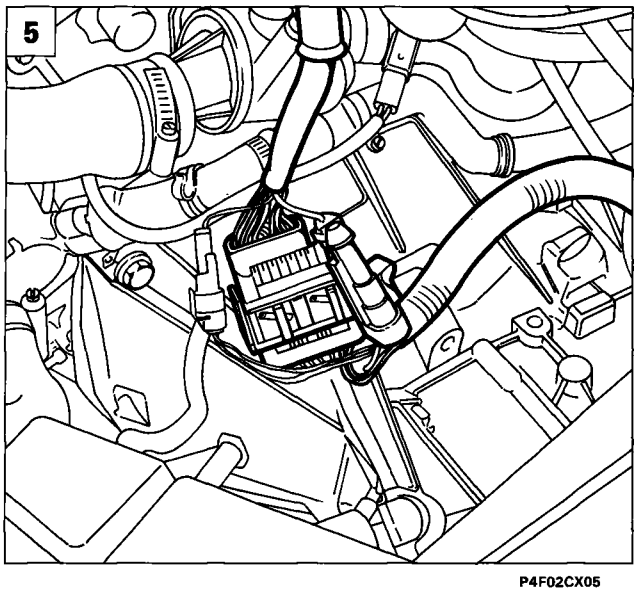

P4F02CX05

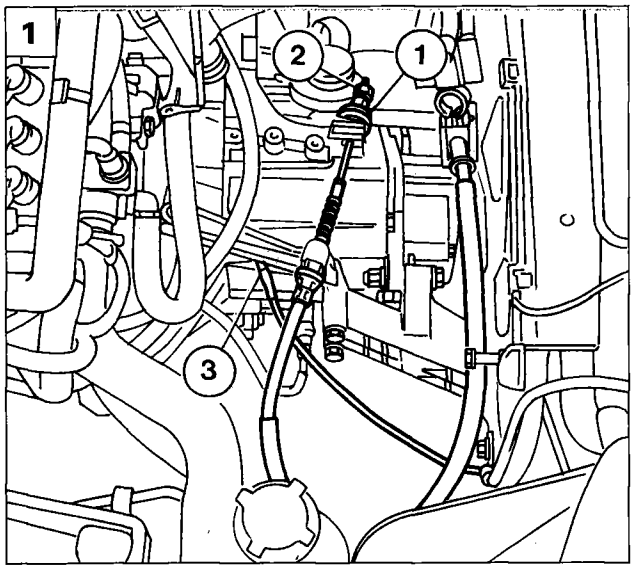

P4F03CX01

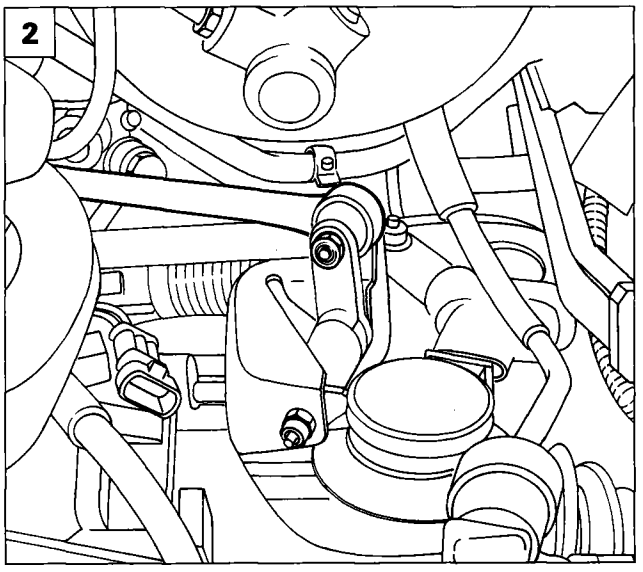

P4F03CX02

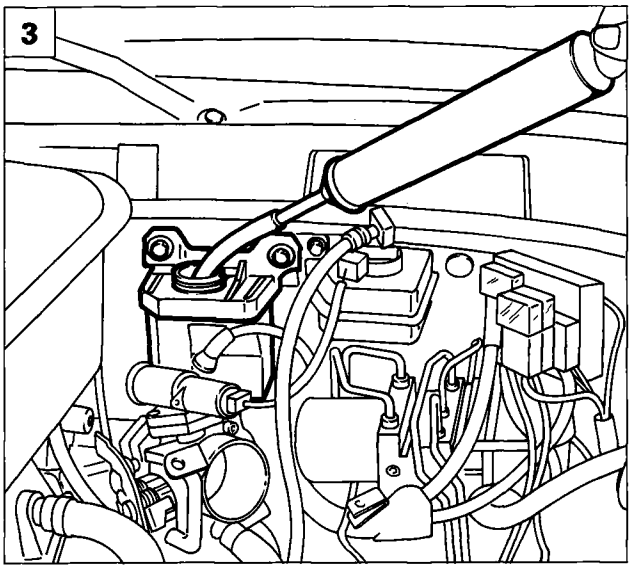

P4F03CX03

1. Disconnect the clutch cable acting on the nut (1) and the lock nut (2) shown in the diagram. Also disconnect the earth cable (3) from the gearbox.
2. Disconnect the upper gearbox control lever acting on the nut shown in the diagram.
3. Drain the power assisted steering fluid from the relevant reservoir.
4. Disconnect the connector (1), shown in the diagram, from the power steering box, taking care to place a container underneath which is suitable for collecting the residual fluid which remains inside the pipe.
5. Undo the bolts fixing the power steering fluid reservoir to the bulkhead between the engine compartment and the passenger compartment; temporarily fix the reservoir to the engine, as appropriate.

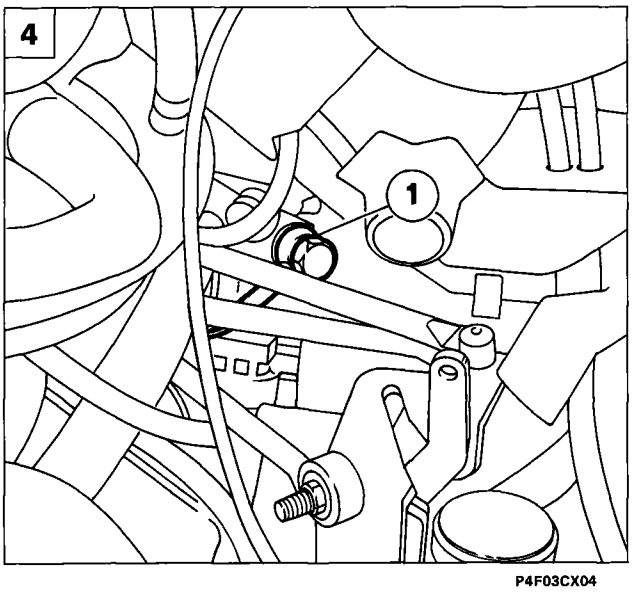

P4F03CX04

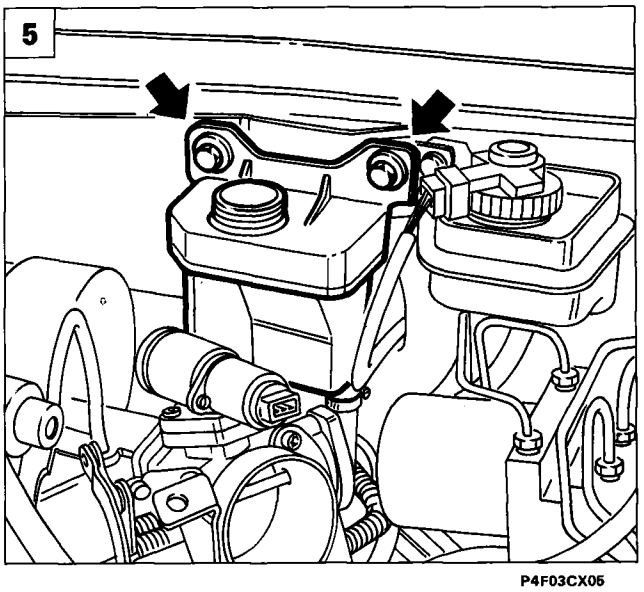

P4F03CX05

10.

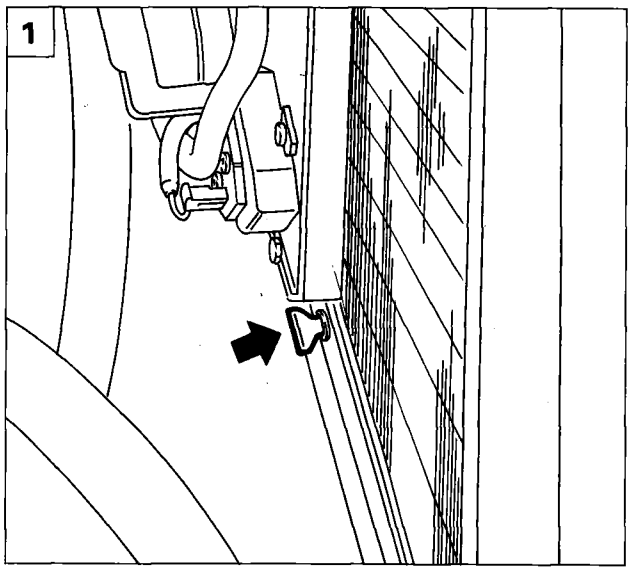

P4F04CX01

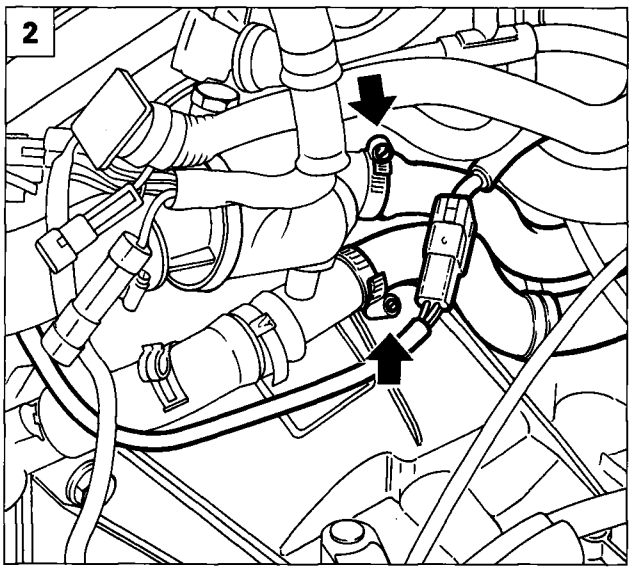

P4F04CX02

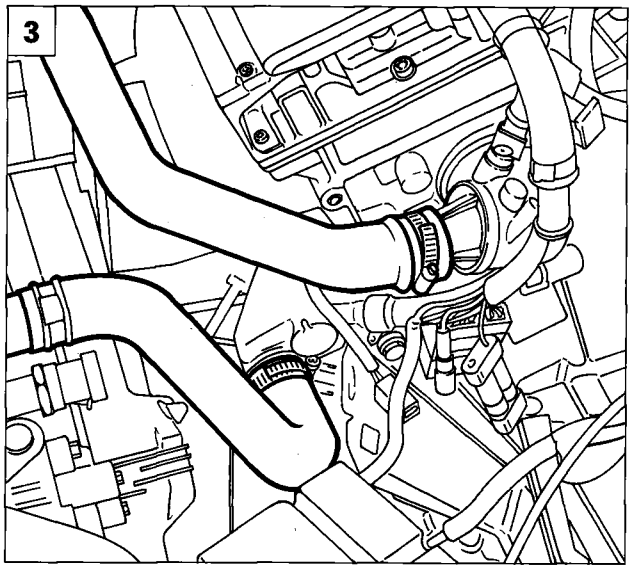

P4F04CX03

1. Place a suitable container underneath the radiator, then drain the coolant acting on the appropriate tap in the lower part of the radiator.
2. Disconnect the Lambda sensor connection and the coolant pipes shown in the diagram.
3. Disconnect the coolant pipes shown in the diagram, connecting the radiator and the engine.
4. Remove the electric fan acting on the appropriate fixing bolts taking care to disconnect the supply connections.
5. Disconnect the pipe shown in the diagram and remove the engine oil dip stick.

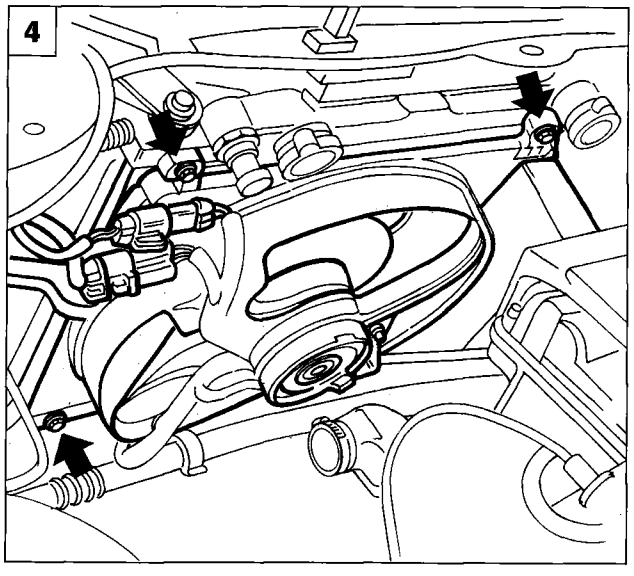

P4F04CX04

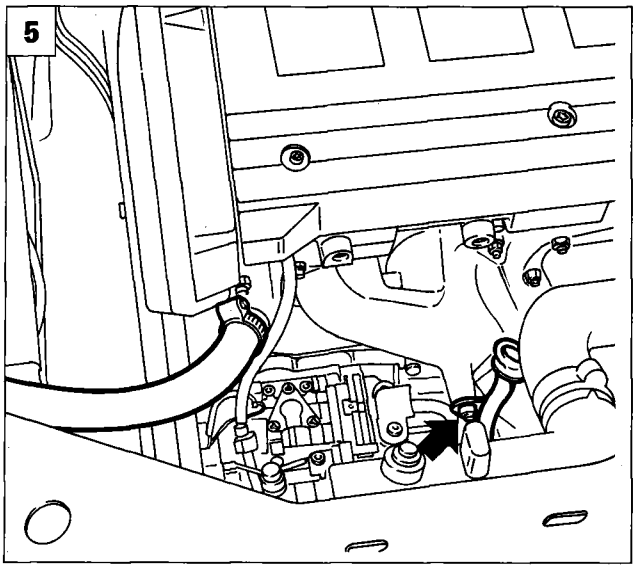

P4F04CX05

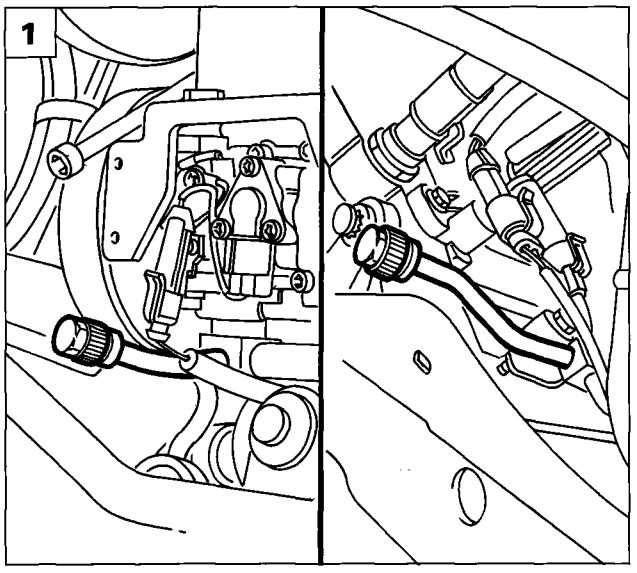

P4F05CX01

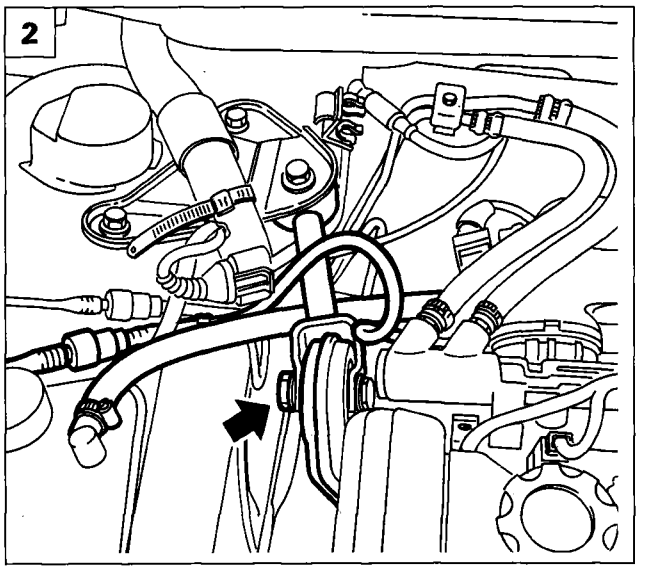

P4F05CX02

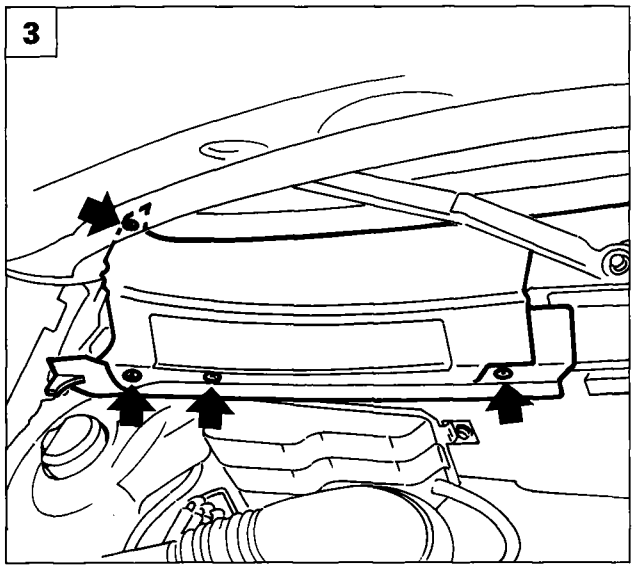

P4F05CX03

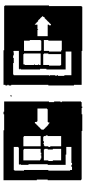

1. Drain the air conditioning system connecting the appropriate equipment to the needle valves shown in the diagram. Proceed as described in Section 50 - Auxiliary units in this manual.
2. Disconnect the coolant pipe and the anti-evaporation pipe shown, then remove the connecting rod.
3. Remove the plastic shield shown in the diagram, acting on the fixing bolts; in order to be able to remove it, the windscreen wiper blade has to be removed.
4. Disconnect the fuel supply and return pipes from the manifold at the points shown.
5. Working from inside the vehicle, remove the glove compartment.

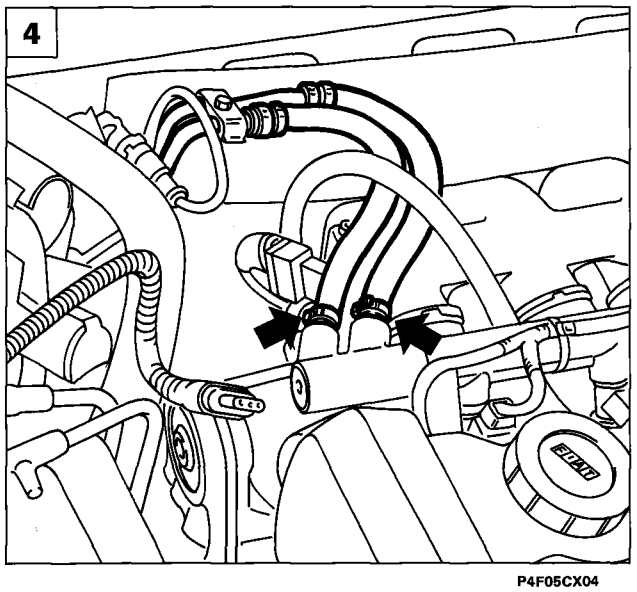

P4F05CX04

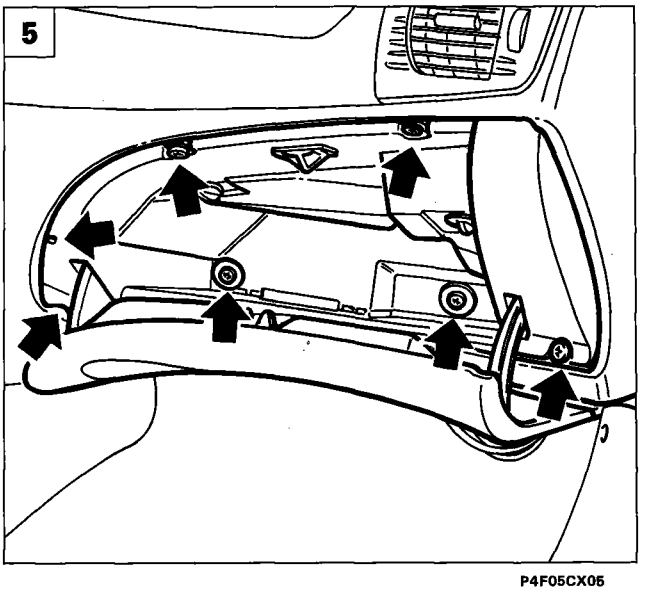

P4F05CX05

Copyright by Fiat Auto

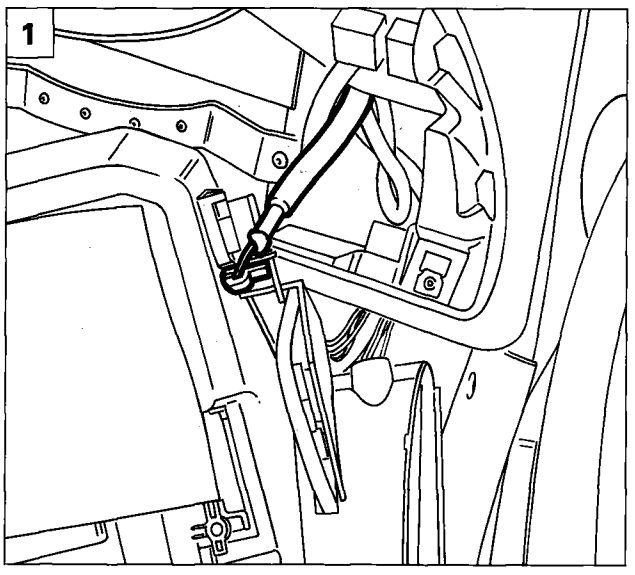

P4F06CX01

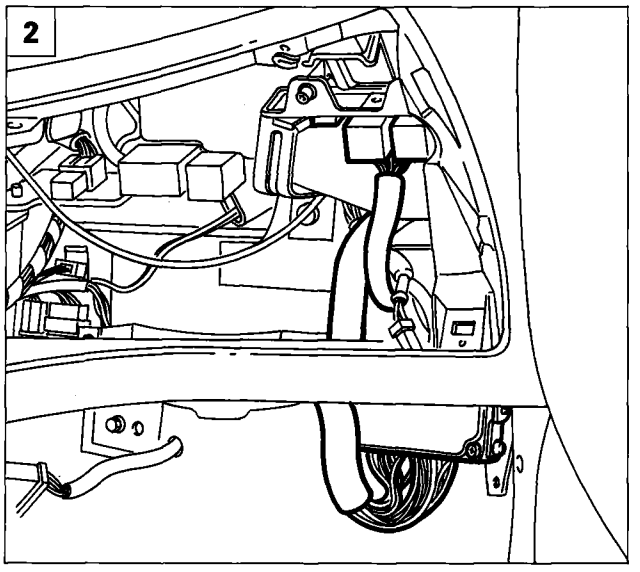

P4F06CX02

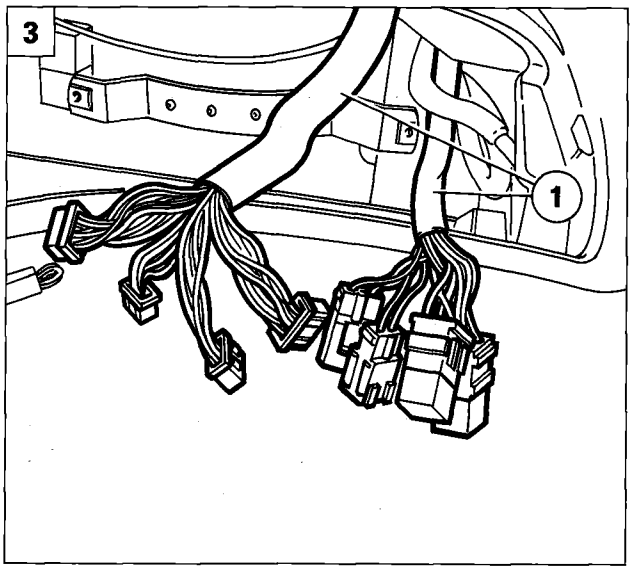

P4F06CX03

1. Disconnect the electrical supply connection for the glove compartment light.
2-3. Disconnect the electrical connections from the injection/ignition control unit and the fuses/relays from the mounting bracket, then extract the wiring (1) through the opening made in the bulkhead between the engine compartment and the passenger compartment.
4. Disconnect the vacuum pipe from the brake servo.
5. Raise the vehicle, then remove the plastic protection from the wheel arch, gearbox side.

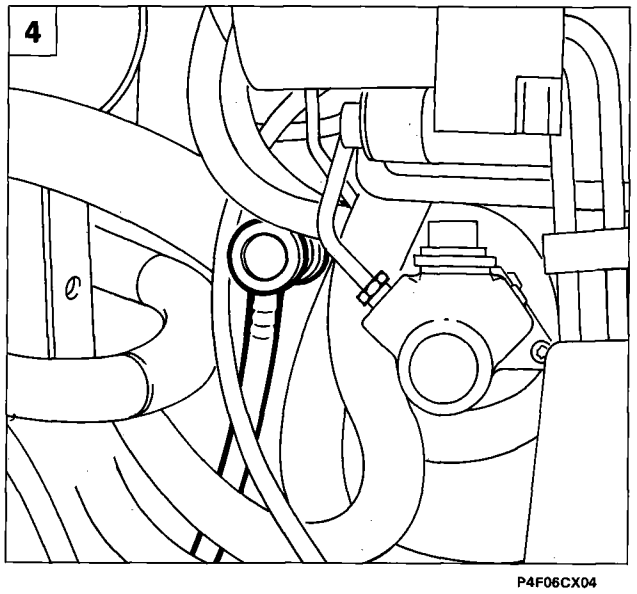

P4F06CX04

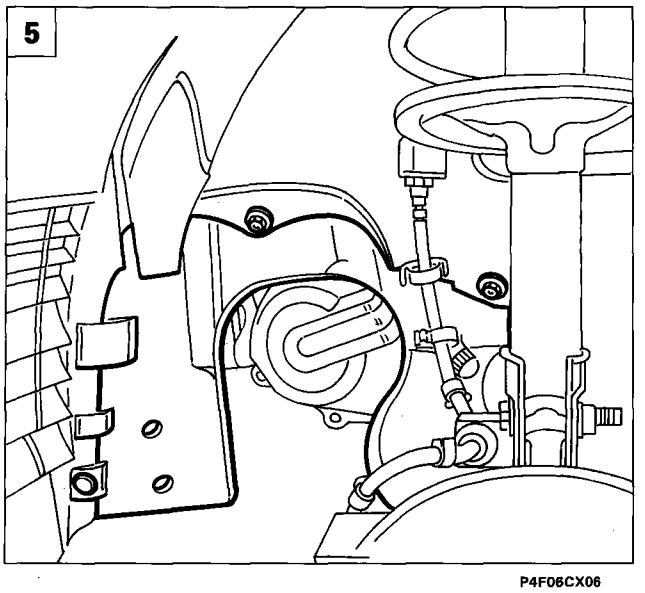

P4F06CX06

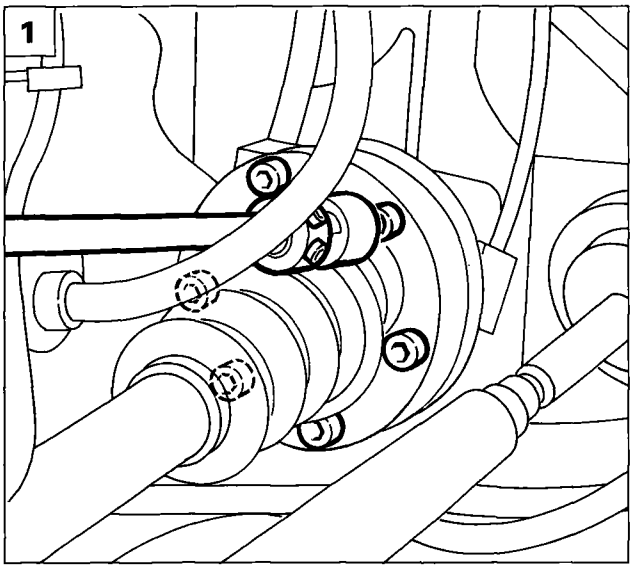

P4F07CX01

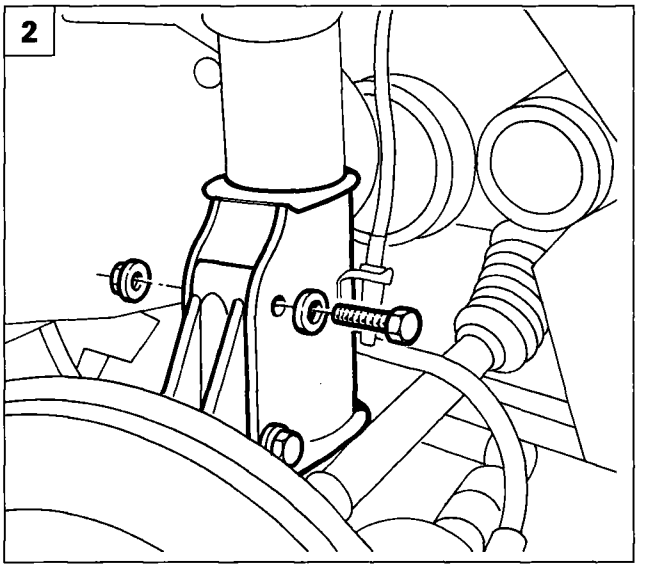

P4F07CX02

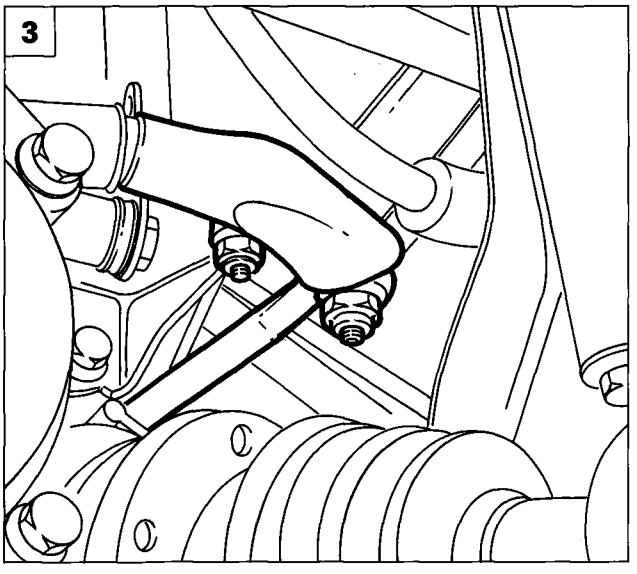

P4F07CX03

1. Undo the bolts fixing the left drive shaft flange.
2. Remove the upper bolt fixing the shock absorber to the steering knuckle and loosen the lower one to allow the drive shaft to be slid out.
3. Disconnect the gearbox control lever and the reaction bracket.
4. Remove the plastic shield shown in the diagram, from the wheel arch, timing side.
5. Move the plastic wheel arch liner aside (timing side) to gain access to the anti-evaporation valve; disconnect the appropriate electrical connection.

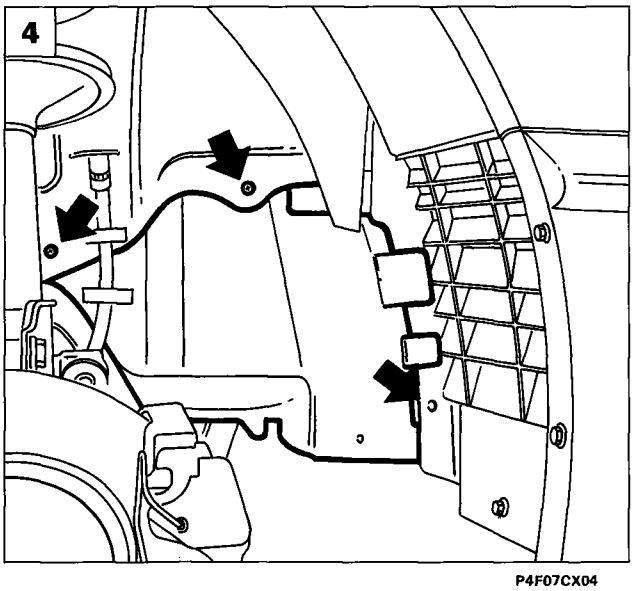

P4F07CX04

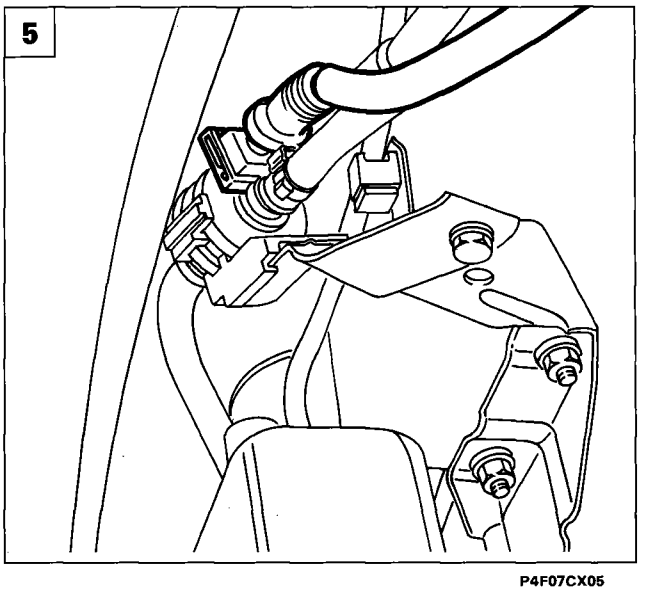

P4F07CX05

Copyright by Fiat Auto

10.

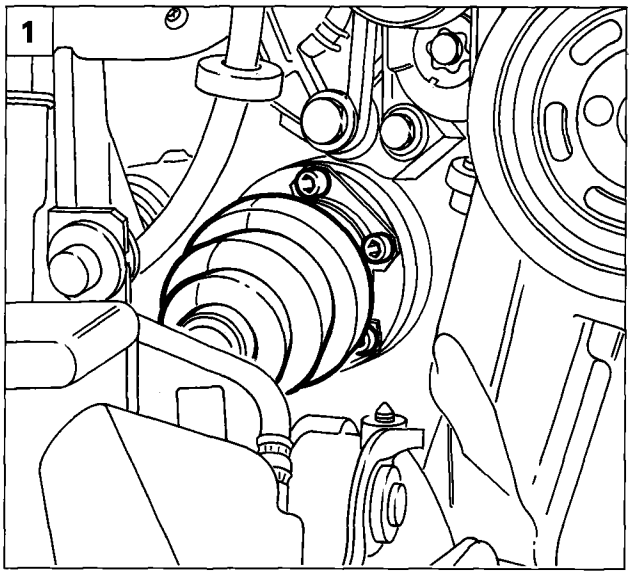

P4F08CX01

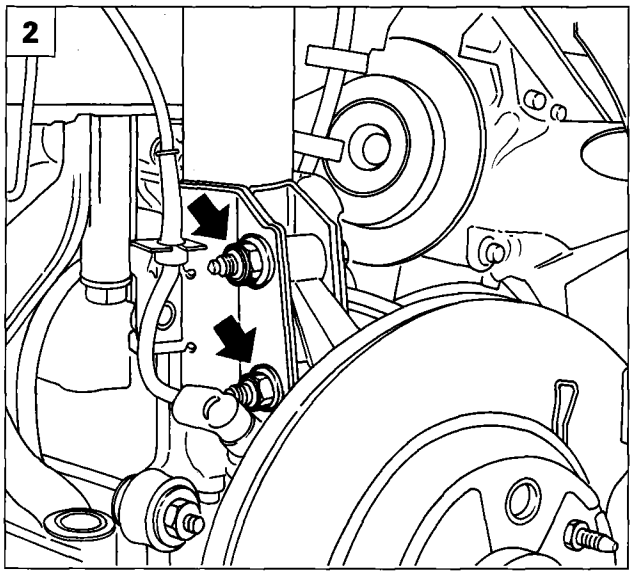

P4F08CX02

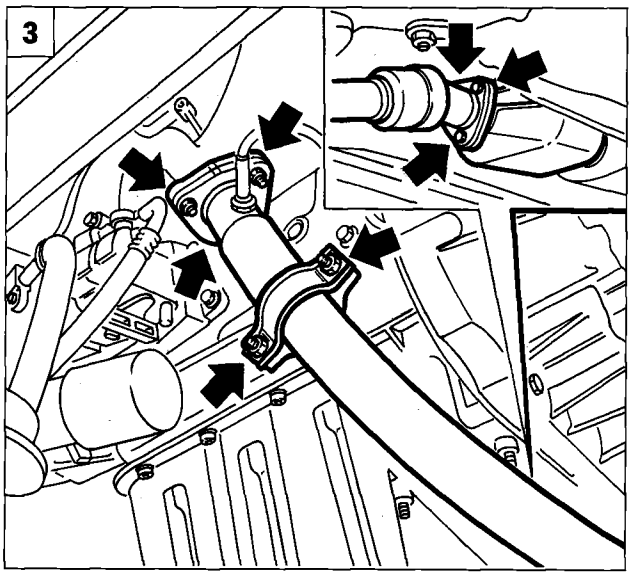

P4F08CX03

1. Undo the bolts fixing the right drive shaft flange.
2. Remove the upper bolt fixing the shock absorber to the steering knuckle and loosen the lower one to allow the drive shaft to be slid out.
3. Remove the first section of the exhaust pipe acting on the fixings shown in the diagram.
4. Position tool 1860860000 supporting the power unit on a hydraulic jack and fix it to the power unit using tools 1860859000 at the points shown in the diagram.

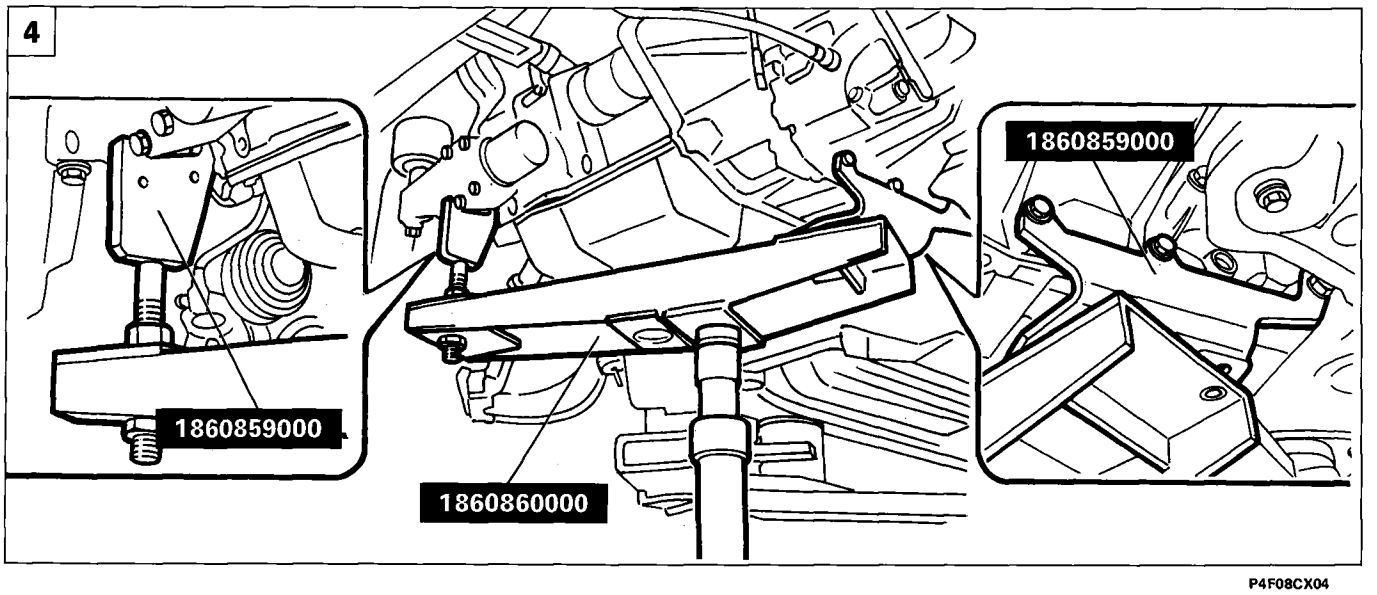

P4F08CX04

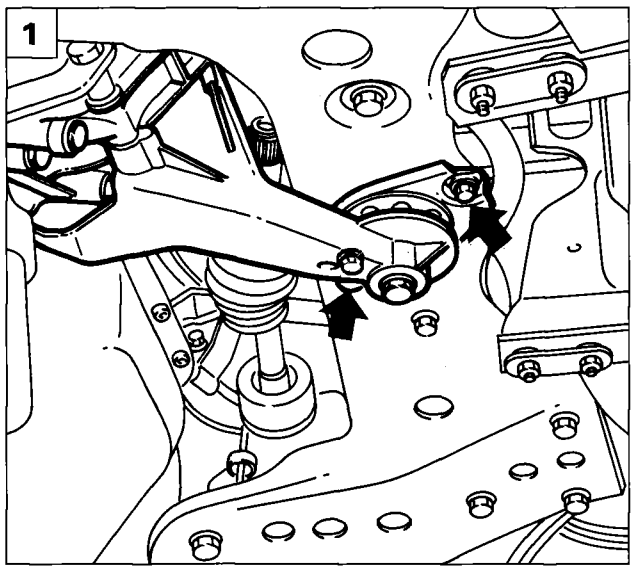

P4A08AX01

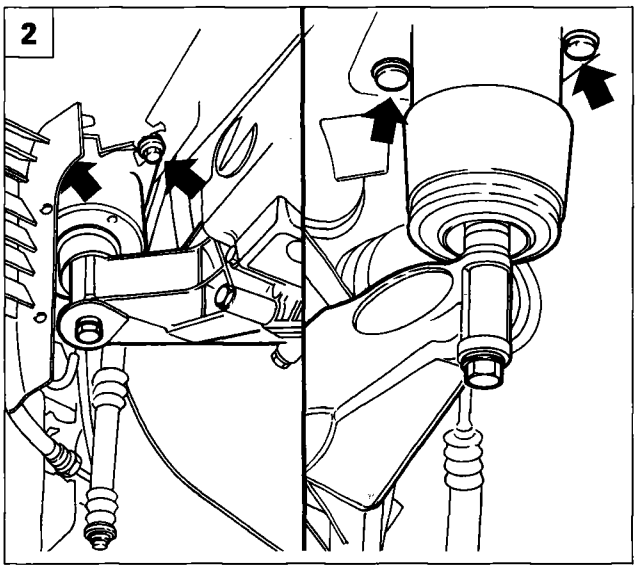

P4A09BX02

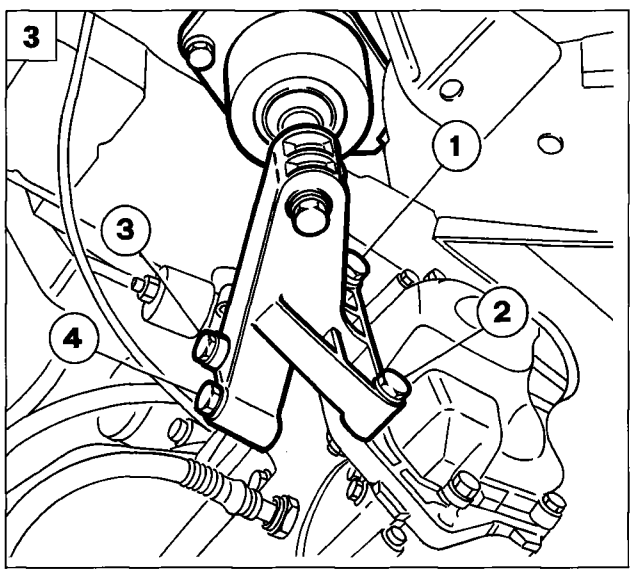

P4A043B01

The hydraulic jack should have a capacity of at least 1000 kg and a height suitable to allow the subsequent removal of the power unit downwards; it is necessary to consider the maximum height which can be reached by the lift and the minimum height which can be reached by the hydraulic jack.

1. Remove the bolts fixing the centre power unit support to the front cross member.
2. Remove the bolts fixing the side power unit supports tothe bodyshell.
3. Remove the gearbox side support in order to facilitate the descent of the power unit.

When refitting this support, in order to avoid tension from being created on the support planes for the gearbox with consequent distortion and subsequent loss of fluid, the following cycle for tightening the fixing bolts should be scrupulously followed:
- Tighten bolts (1) and (2) to a pre-torque of 0.5 daNm;
- Tighten bolts (3) and (4) to a pre-torque of 0.5 daNm, then tighten them to the recommended torque;
- Tighten bolts (1) and (2) to the recommended torque.

4. Lower the hydraulic jack and extract the power unit from the lower part of the vehicle.

Lower the hydraulic jack gradually and check that the power unit and supporting equipment are correctly positioned and balanced.

5. Position the power unit on the support using a hydraulic hoist.

Do not move the power unit when installed on the hydraulic jack.
In order to move the power unit, use a hydraulic hoist equipped with tools 1860592000 after having previously released it from the supporting tool.

10.

NOTE *In order to refit the power unit simply reverse the order of the operations described for the removal.*

- *Prepare the engine compartment for inserting the power unit, taking care to position all the electrical wires, pipes, etc. so that there are no problems when refitting;*
- *Take the necessary care, when fitting the power unit, to avoid damaging the individual components;*
- *When refitting the engine coolant pipes, make sure that the notch in the flexible (rubber) pipe coincides with the projection on the rigid coupling hose. To refill the engine cooling circuit, refer to the instructions given in this section in the chapter "Removing-refitting radiator".*

Firstly, fix the engine side support tightening the bolts fixing it to the bodyshell to the recommended torque, then fix the gearbox side support and lastly the differential side centre support. Make sure that the power unit support points have been fixed correctly.

Clutch pedal height.

REMOVING-REFITTING AUXILIARY SHAFT DRIVE BELT

Position the vehicle on a lift, disconnect the negative battery lead, remove the right front wheel, then proceed as described below:

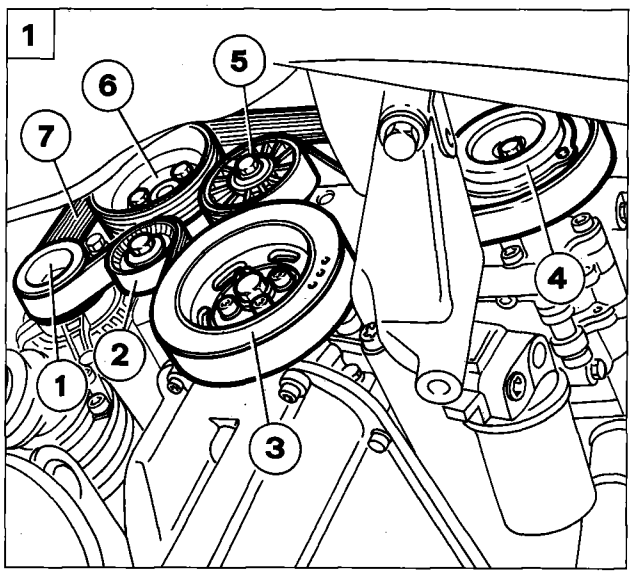

P4F10CX01

1. Remove the right front wheel arch liner in order to gain access to the auxiliary shaft drive belt.

Check the condition and the tension of the auxiliary shaft drive belt and in particular that there are no: cracks, cuts, surface wear of the material (making it look smooth and shiny) or dry or hard sections with a consequent loss of adhesion. If any of the above defects is present, replace the belt.

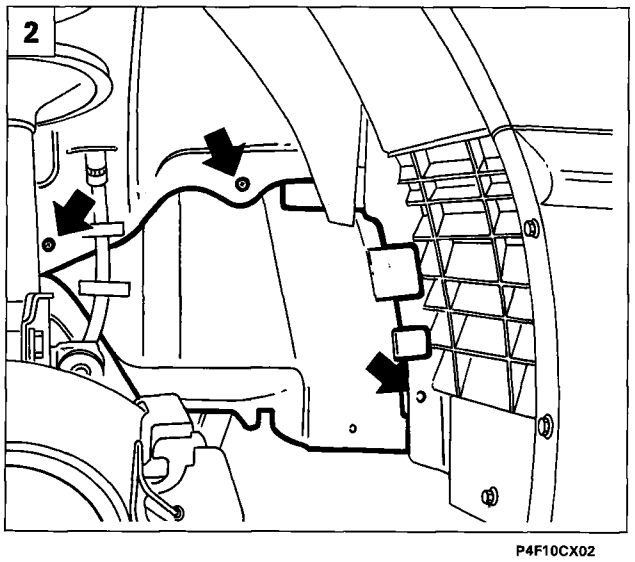

P4F10CX02

2. View of auxiliary shaft belt fitted on the vehicle:
   1. Alternator
   2. Automatic tensioning device
   3. Crankshaft pulley
   4. Air conditioning compressor pulley
   5. Fixed tensioner
   6. Power steering pump pulley
   7. Auxiliary shaft drive belt

Avoid the belt coming into contact with oil or solvents which could adversely affect the elasticity of the rubber with a consequent reduction in adhesion.

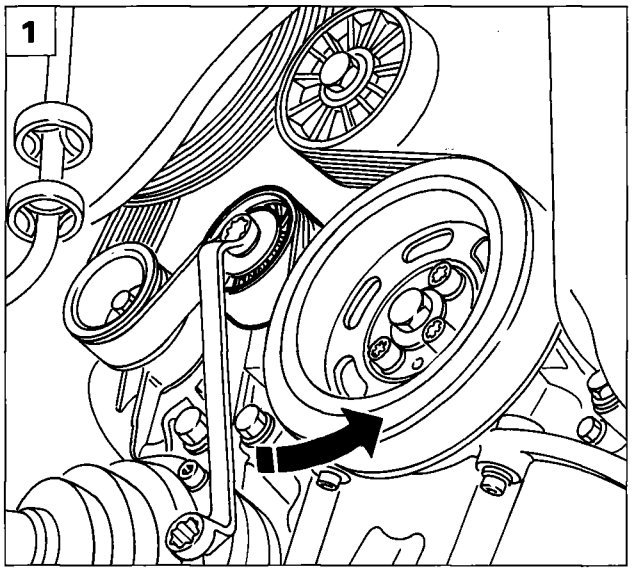

P4F11CX01

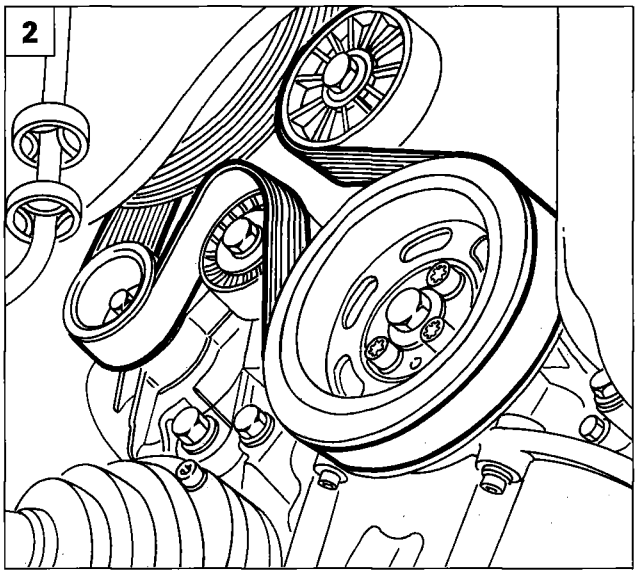

P4F11CX02

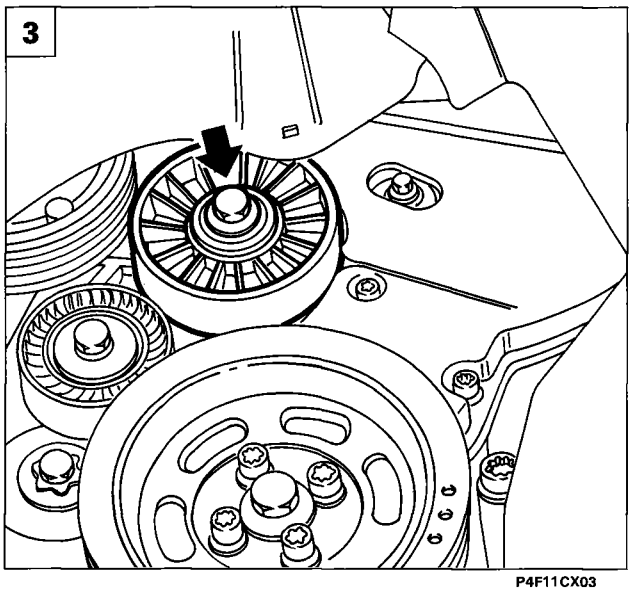

P4F11CX03

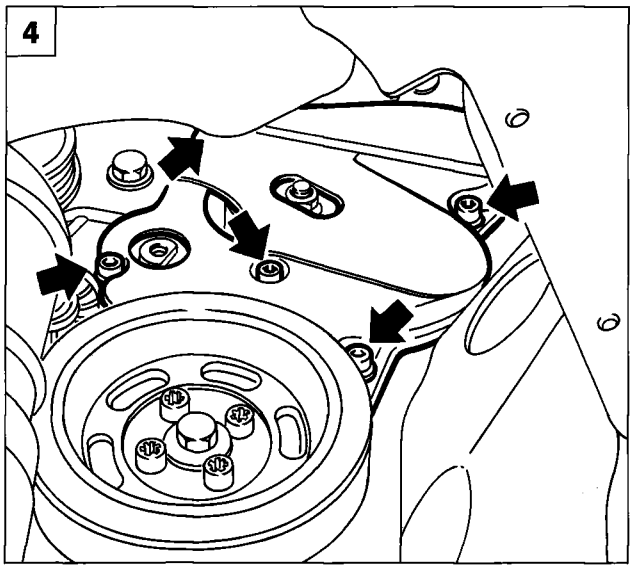

P4F11CX04

1. Loosen the tension of the belt acting in an anti-clockwise direction on the centre nut for the automatic tensioning device in order to release the spring inside the actual device.
2. Remove the auxiliary shaft drive belt always discharging the tension at the tensioning device.

When fitting the new belt, suitably reverse the order of the operations carried out for the removal; the pre-loaded spring for the automatic tensioner guarantees the correct tension of the belt after several revolutions of the crankshaft.

REMOVING-REFITTING TIMING DRIVE BELT

Before removing the timing belt it is necessary to remove the auxiliary shaft drive belt as described in the previous paragraph.

3. Remove the fixed pulley for the auxiliary shaft drive belt to allow the subsequent removal of the timing belt shield.
4. Remove the lower bolts fixing the timing belt shield.

10.

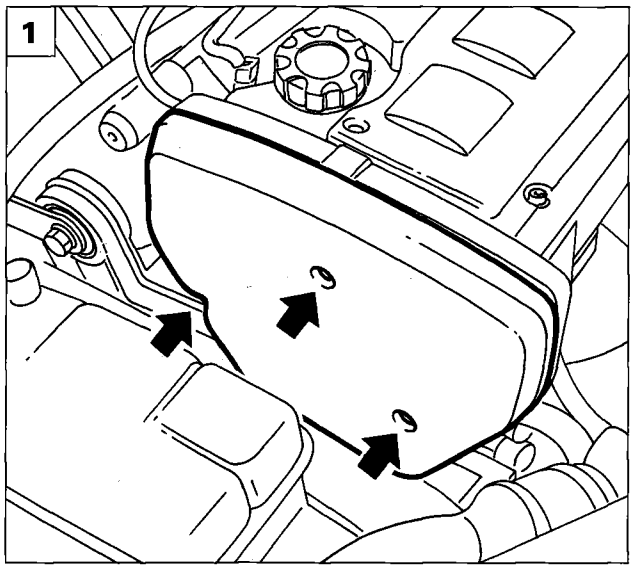

P4F12CX01

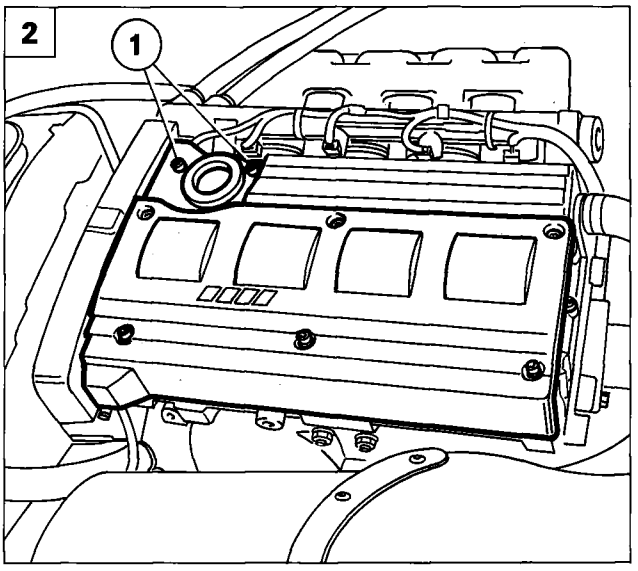

P4F12CX02

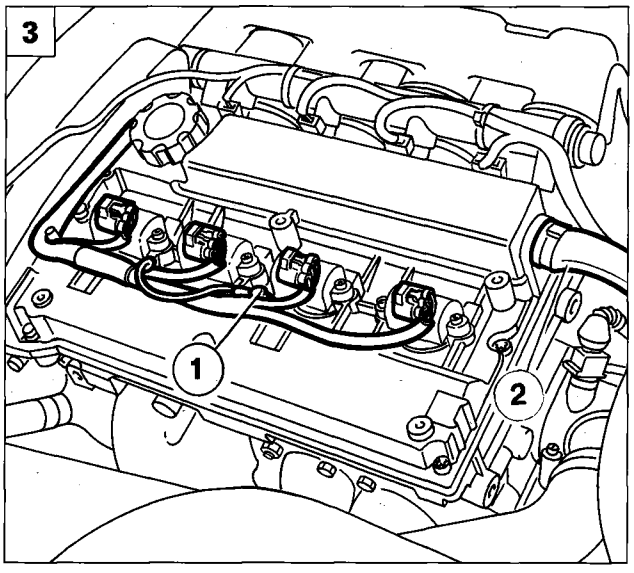

P4F12CX03

1. Undo the upper bolts fixing the timing belt shield, then remove the actual shield from the engine compartment.
2. Remove the cover for the ignition coils acting on the bolts shown in the diagram; the bolts (1) are accessible by removing the cap for topping up the engine oil.
3. Disconnect the supply connections for the ignition coils, the earth cable (1) and the oil vapour recovery pipe (2) from the cylinder head cover.
4. Disconnect the electrical connection shown in the diagram from the air conditioning compressor.
5. Remove the cylinder head cover acting on the appropriate fixing bolts shown in the diagram.

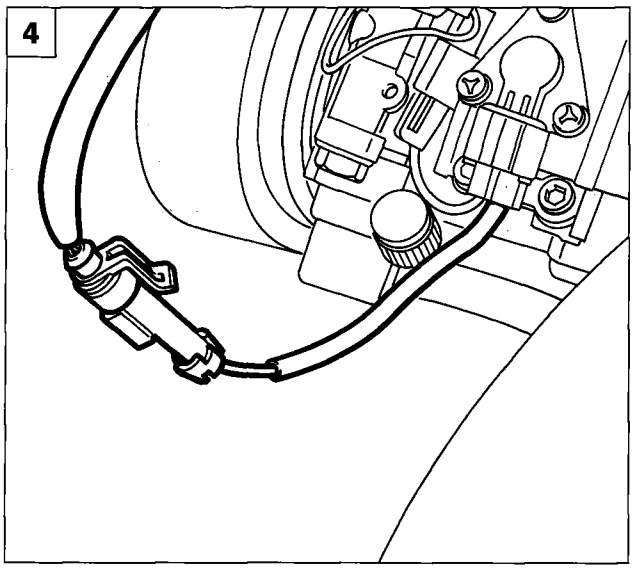

P4F12CX04

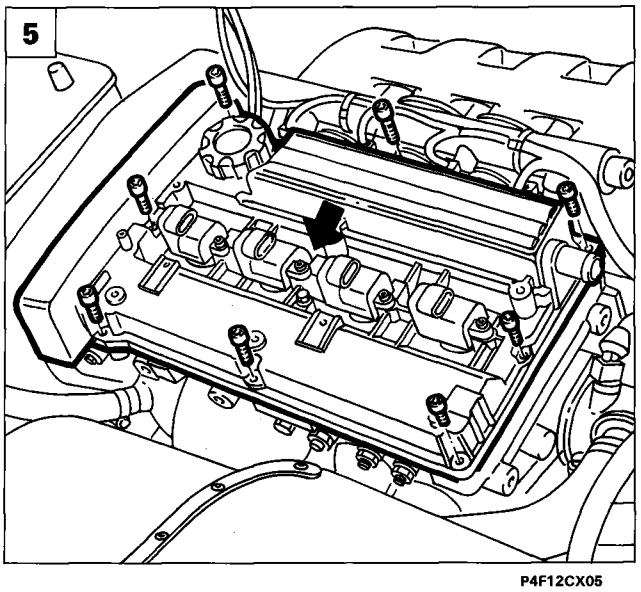

P4F12CX05

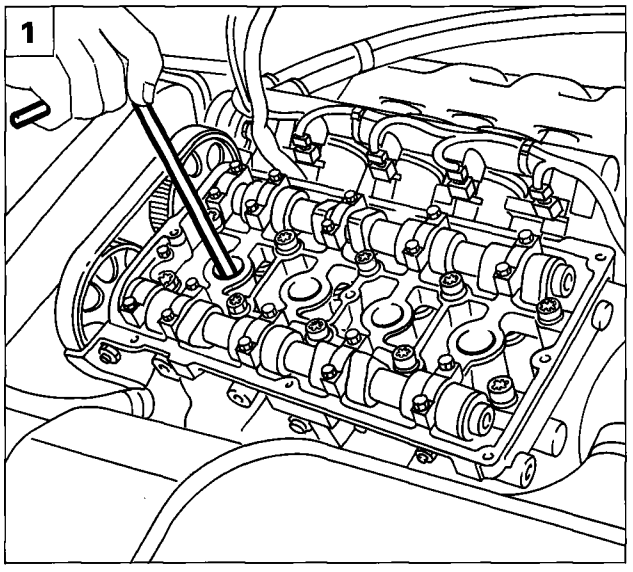

P4F13CX01

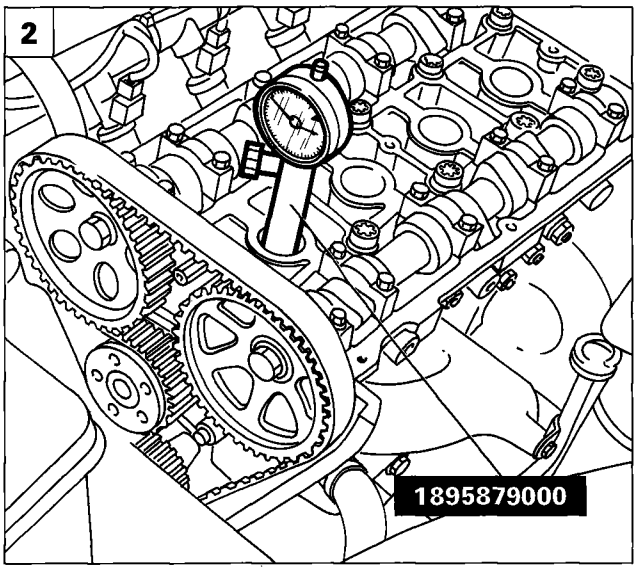

P4F13CX02

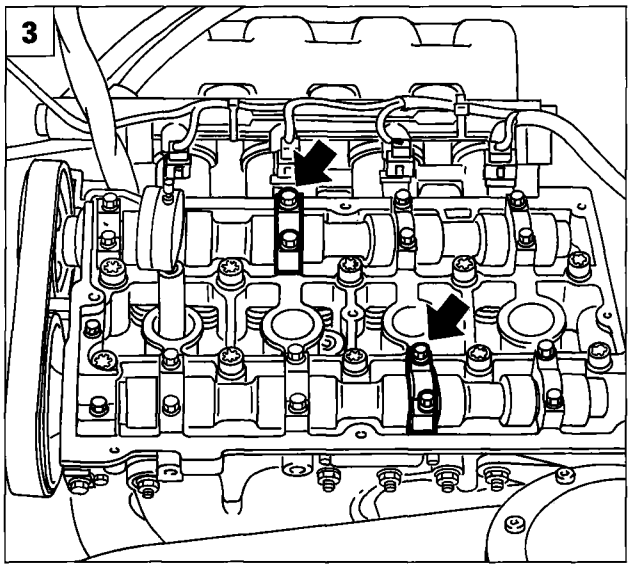

P4F13CX03

1. Remove the spark plugs using the appropriate spanner.
2. Position the dial gauge by cylinder n° 1 using tool 1895879000, rotate the crankshaft until T.D.C. is identified.
3. Remove the 2nd camshaft fixing cap, inlet side and the 3rd camshaft fixing cap, exhaust side as illustrated in the diagram.

When removing the camshaft caps it is necessary to mark them so that they can be refitted in the correct position. if this is not the case, it could create problems with the reliability of the camshafts.

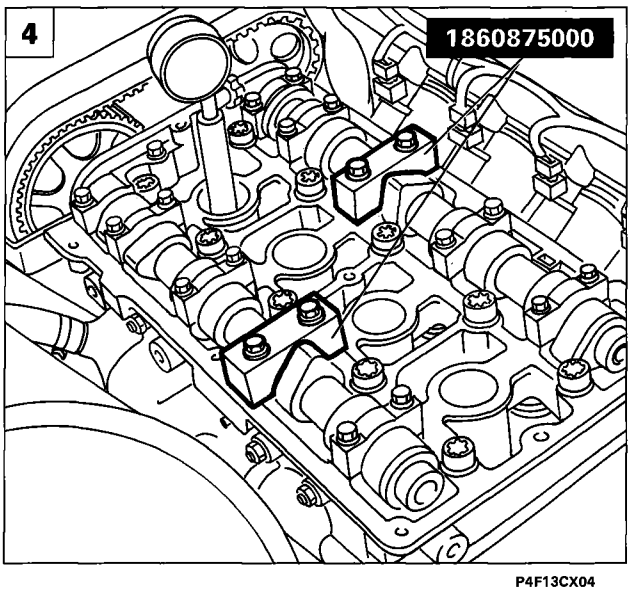

P4F13CX04

4. Position and fix the pair of tools 1860875000 by the previously removed caps.

The pair of tools 1860875000 should exactly follow the profile of the camshaft cams.

10.

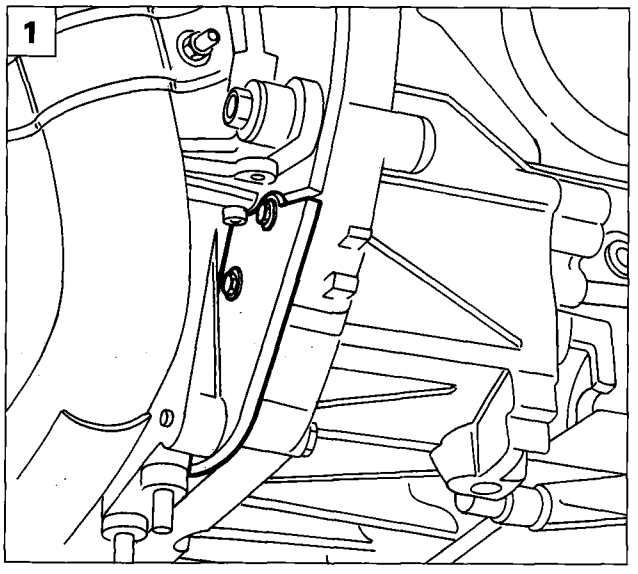

P4F14CX01

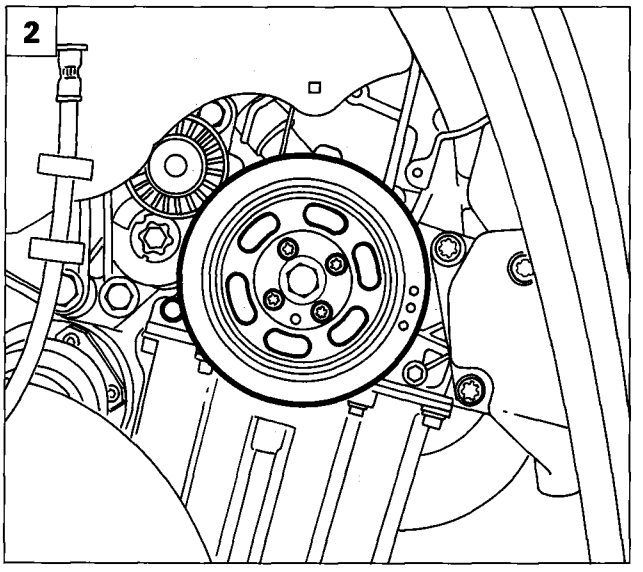

P4F14CX02

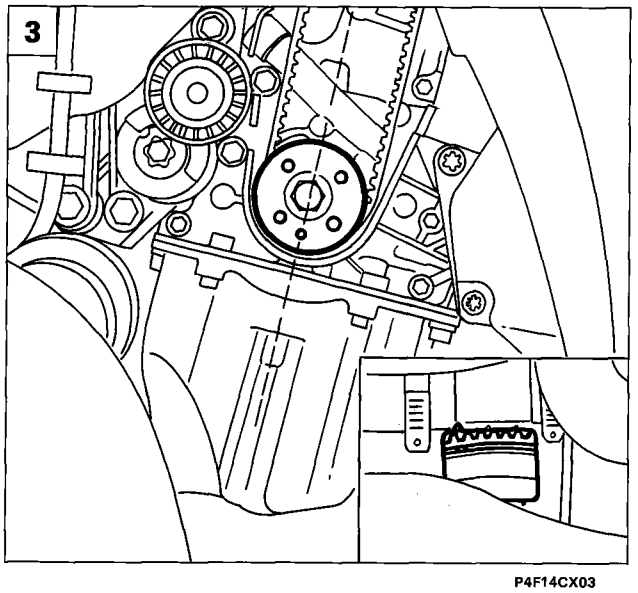

P4F14CX03

1. Remove the protective gearbox cover shown in the diagram, then place the flywheel lock 1860898000 in position.
2. Remove the auxiliary shaft drive pulley from the crankshaft.
3. Check that the centering dowel on the crankshaft drive gear is positioned along the engine axis. Then remove the inspection cover on the bell housing and check that the reference on the flywheel coincides with the reference on the actual bell housing, as shown in the inset.

4-5. Loosen the tension of the timing belt acting on the nut shown in the diagram, then remove the actual belt.

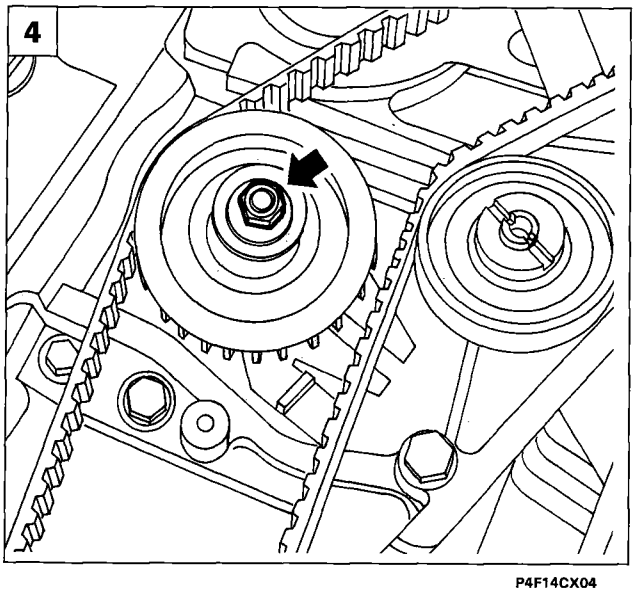

P4F14CX04

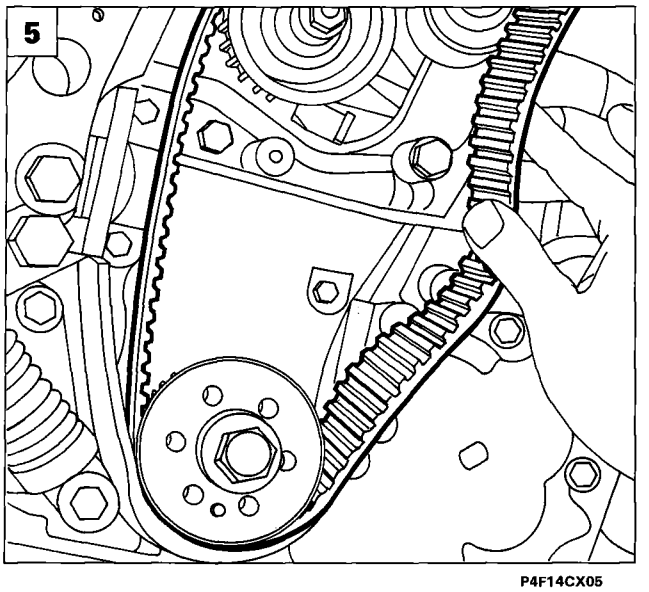

P4F14CX05

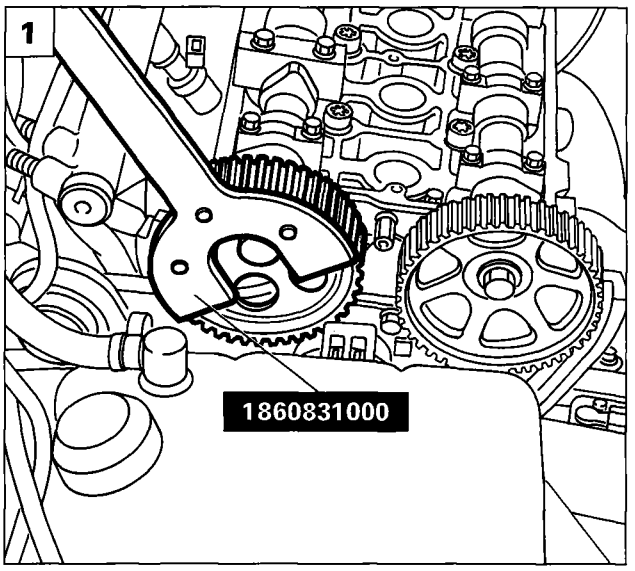

P4F15CX01

Fitting timing belt

1. To facilitate the positioning of the timing belt, loosen the bolt fixing the camshaft pulley, inlet side and the camshaft pulley, exhaust side, using tool 1860831000. These pullies, in fact, have slots, allowing the correct matching of the belt/pulley.

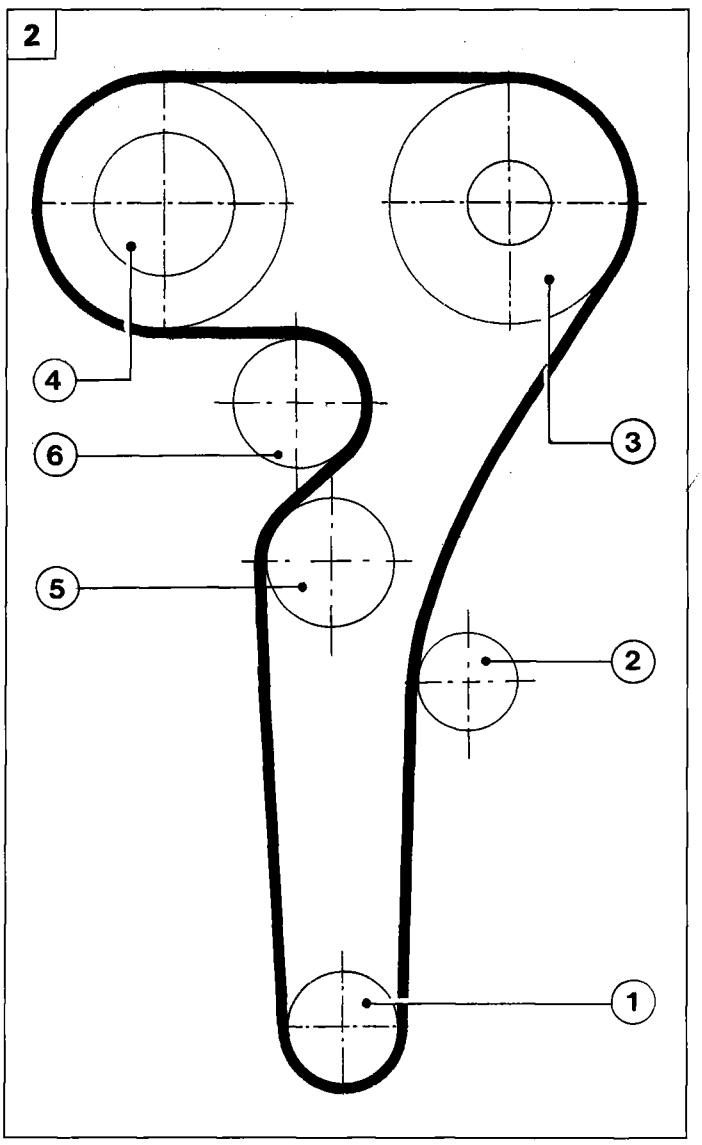

P4F15CX02

2. Fit the belt following the order given:

   - crankshaft driving pinion (1);
   - fixed pulley (2);
   - camshaft pulley, exhaust side (3);
   - camshaft pulley, inlet side (4);
   - automatic tensioner pulley (5);
   - water pump pulley (6).

NOTE *The belt should be fitted avoiding bending it at acute angles in order not to adversely affect the structure of the actual belt.*

Fit the belt so that the arrow is pointing in the direction of rotation of the engine. There are 3 reference marks on the belt which should coincide during the first fitting of the new belt with the references on the crankshaft gear and the camshaft pullies, exhaust side and inlet side.

10.

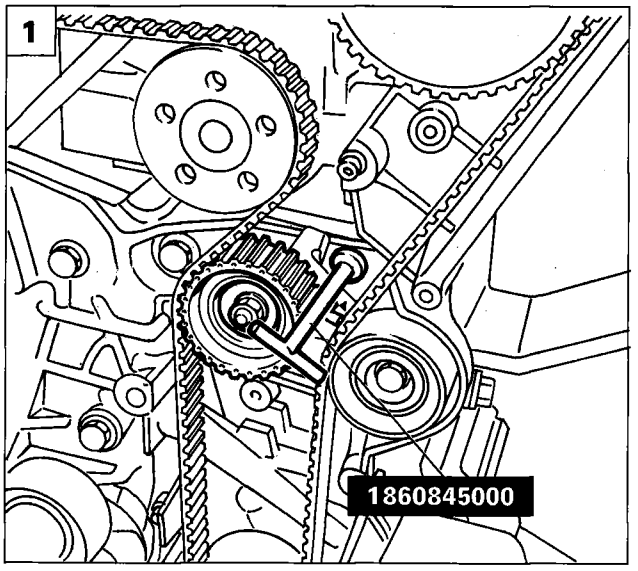

P4F16CX01

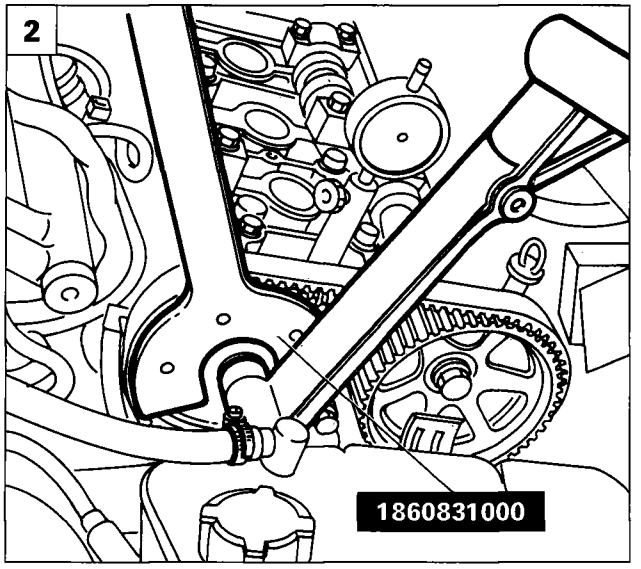

P4F16CX02

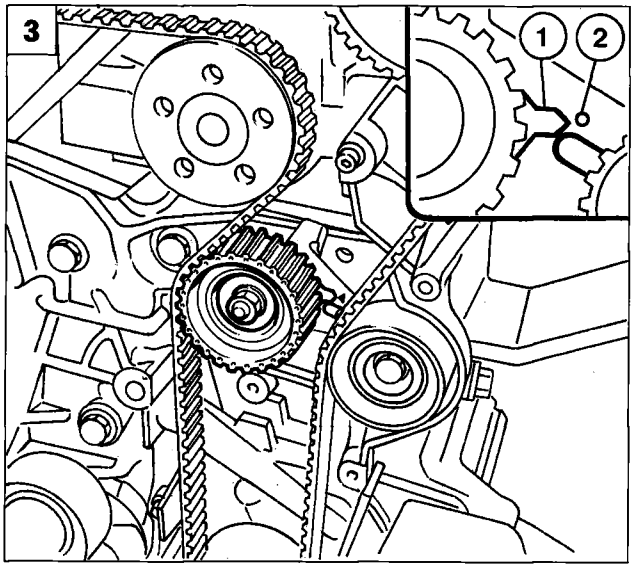

P4F16CX03

Tensioning timing belt

1. Introduce tool 1860845000 into the opening in the automatic tensioner support; turn the tool in order to exert force on the automatic tensioner until it is in the maximum tension position, then tighten the nut fixing the tensioner to the support.
2. Tighten the bolt fixing the camshaft pulley, inlet side and exhaust side, to a torque of 11.8 daNm using tool 1860831000.
3. Remove the pair of tools 1860875000 and reposition the camshaft caps (marked when removing them) in the correct position and tighten them to a torque of 1.5 daNm. Remove the flywheel lock 1860898000, then rotate the crankshaft in its direction of rotation through two revolutions.

Loosen the nut fixing the belt tensioner and, using tool 1860845000, make sure that the moving reference (1) for the belt tensioner coincides with the fixed reference (2) on the crankcase. Tighten the nut fixing the belt tensioner to a torque of 2.5 daNm and then refit the components removed previously.

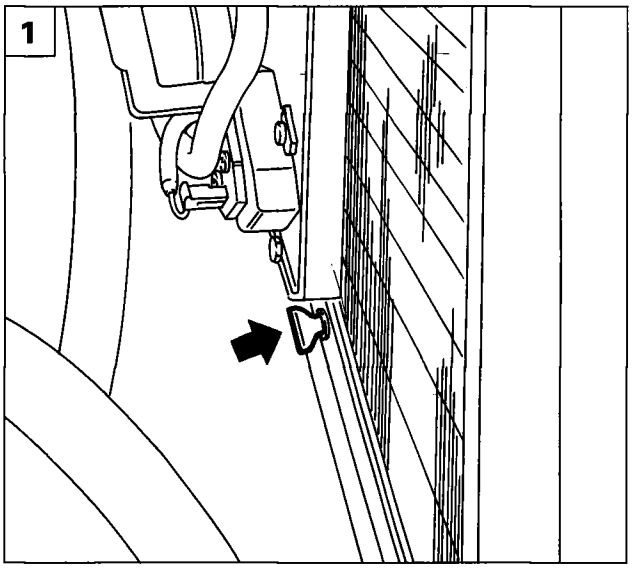

P4F17CX01

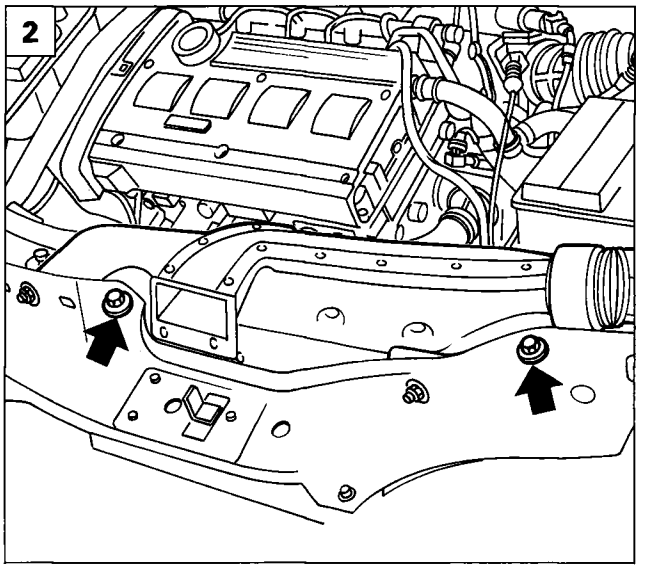

P4F17CX02

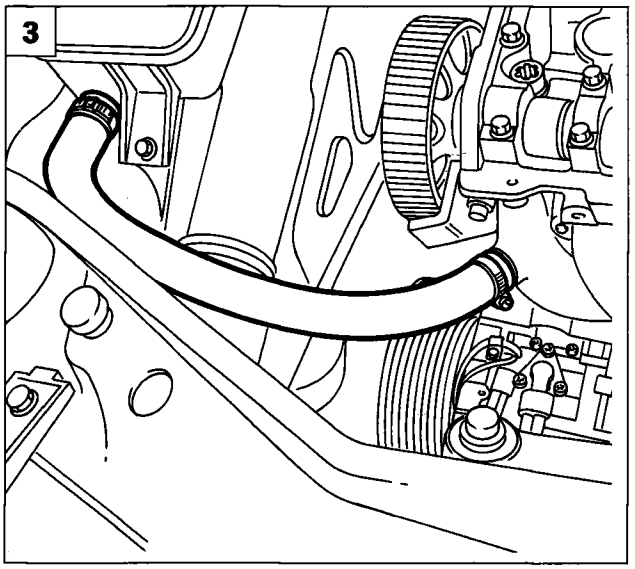

P4F17CX03

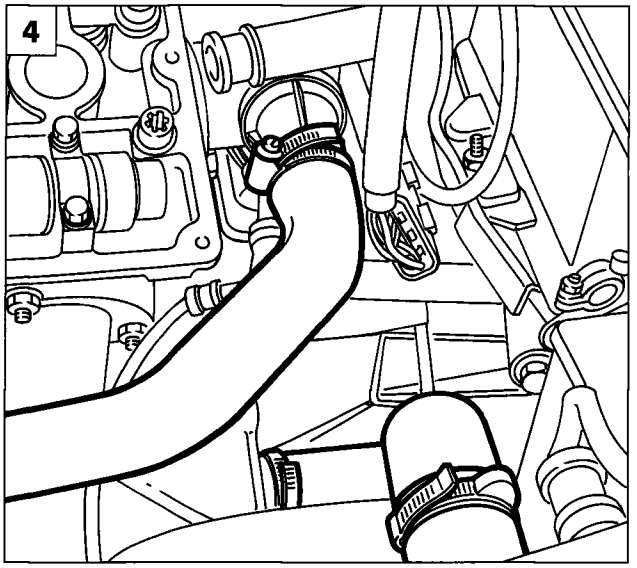

P4F17CX04

REMOVING-REFITTING CYLINDER HEAD

Disconnect the negative battery lead, remove the auxiliary shaft drive belt and the timing belt, as described in the previous paragraphs, then proceed as described below:

1. Drain the coolant acting on the special tap shown in the diagram.
2. Remove the air intake duct acting on the fixings shown in the diagram.
3. Remove the pipe shown in the diagram connected to the expansion tank.
4. Remove the radiator coolant inlet and outlet pipes shown in the diagram.

10.

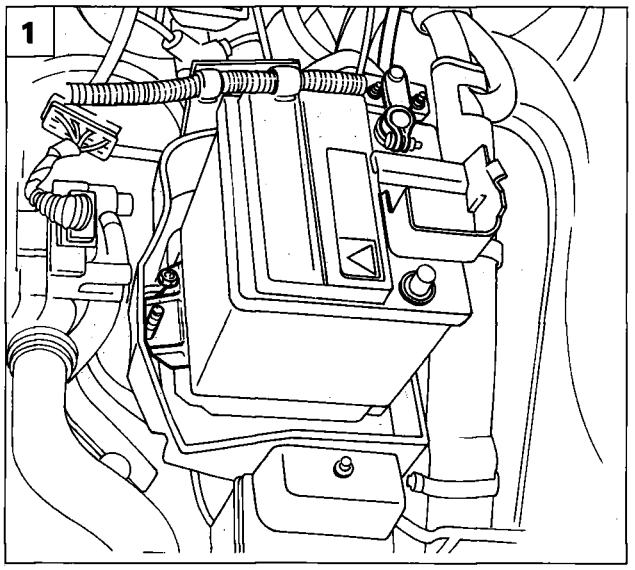

P4F18CX01

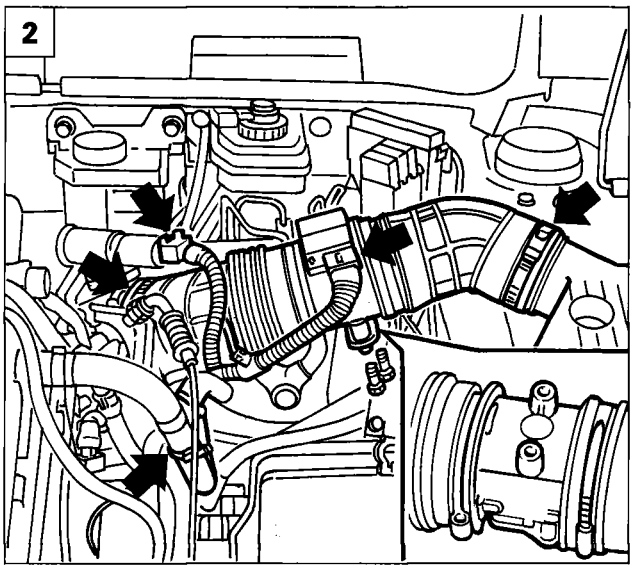

P4F18CX02

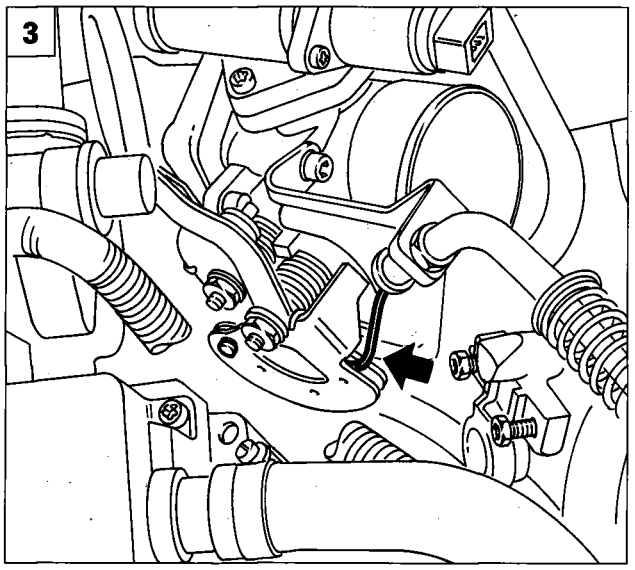

P4F18CX03

1. Disconnect the positive battery pole, then remove the actual battery acting on the retaining bracket.
2. Disconnect the electrical connections shown, then remove the complete inlet duct, acting on the bands at the ends of the actual pipe and on the bolts fixing the flow meter to the mounting bracket.
3. Disconnect the accelerator cable.
4. Remove the pipe from the thermostat and the connectors shown, then release the wires from the mounting bracket.
5. Disconnect the connections from the injectors.

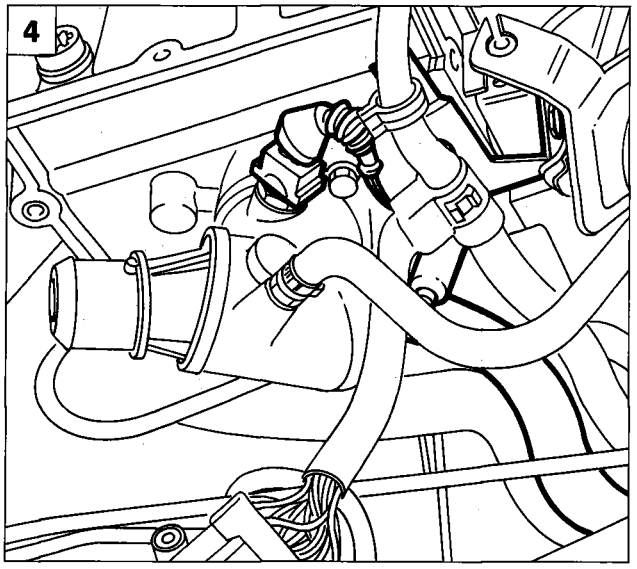

P4F18CX04

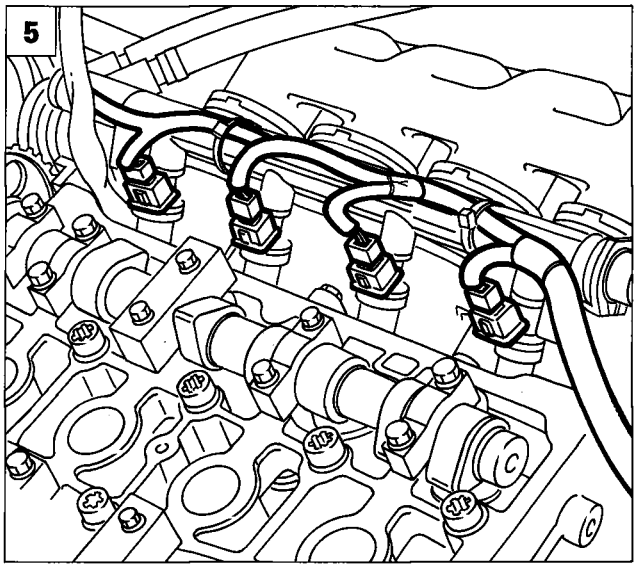

P4F18CX05

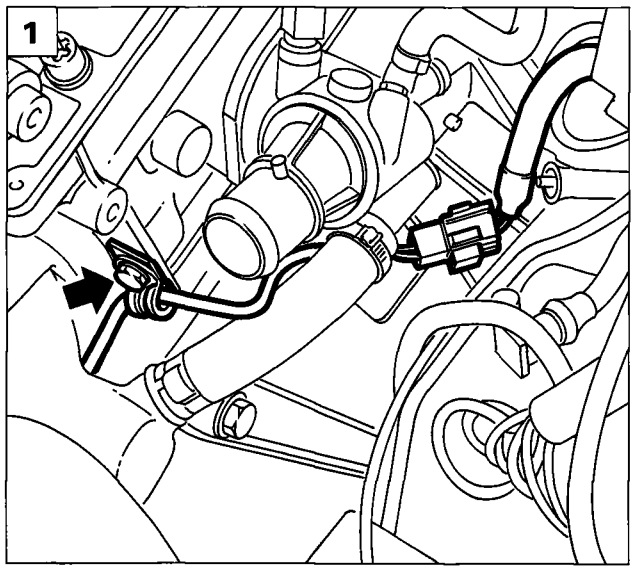

P4F19CX01

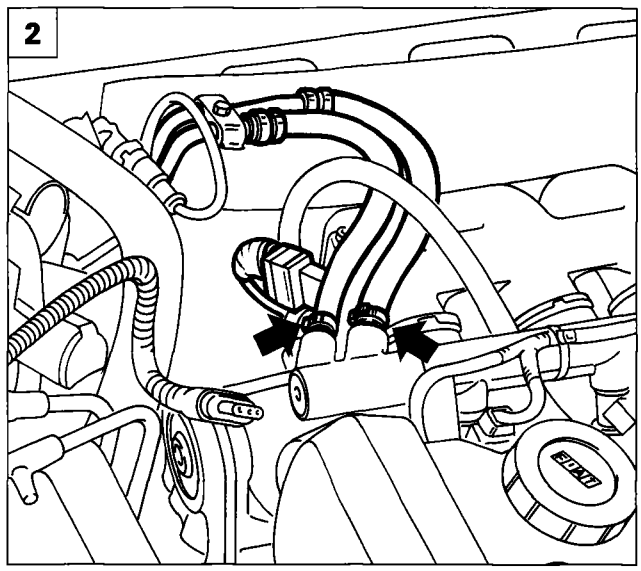

P4F19CX02

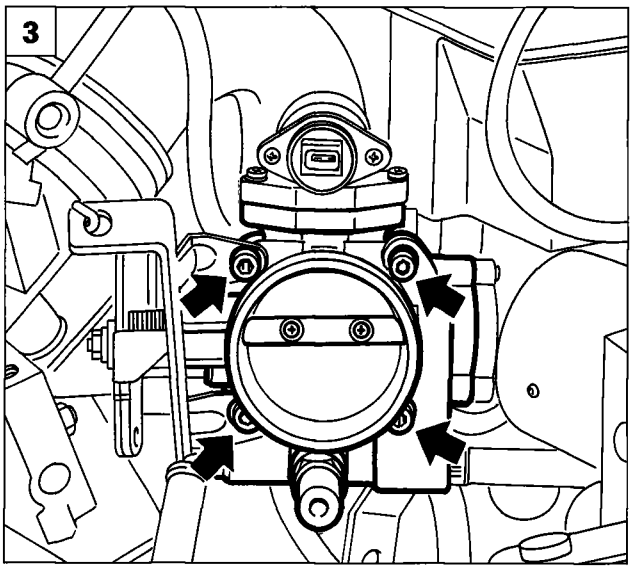

P4F19CX03

1. Disconnect the Lambda sensor electrical connection, then release the cable from the mounting bracket.
2. Disconnect the fuel supply and return pipes between the fuel supply manifold and the injectors, also disconnect the timing sensor connection.
3. Remove the butterfly casing in order to gain access to the inlet manifold rear fixing bracket.
4. Remove the inlet manifold rear fixing bracket.
5. Disconnect the connector shown in the diagram and the pipe for the anti-evaporation system, disconnecting it from the valve shown in the inset.

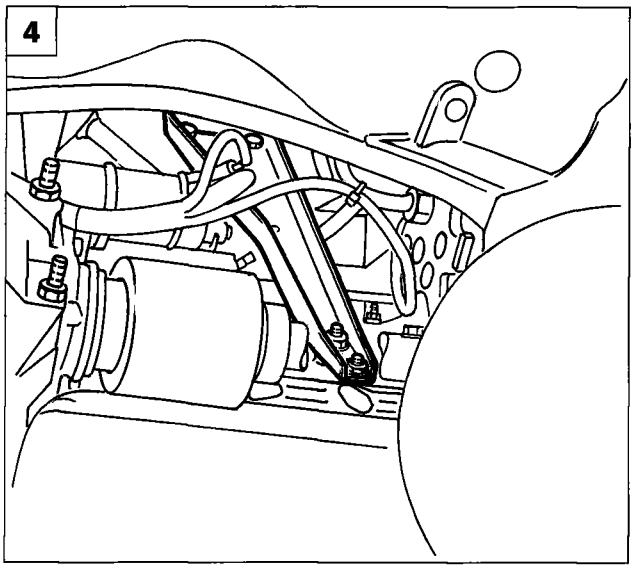

P4F19CX04

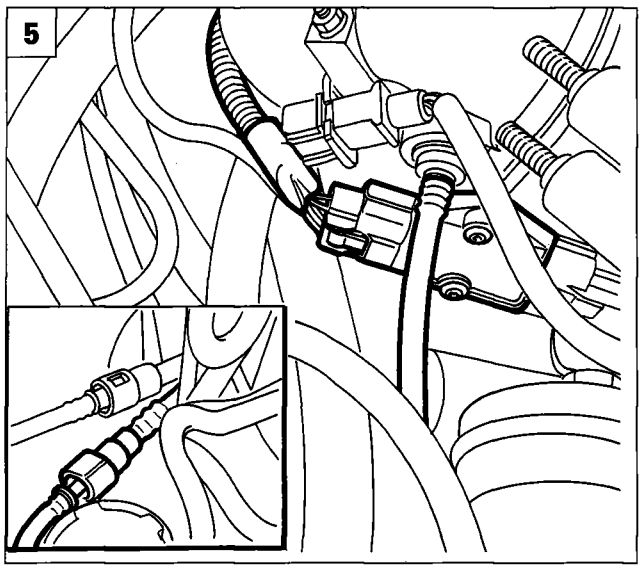

P4F19CX05

Copyright by Fiat Auto

10.

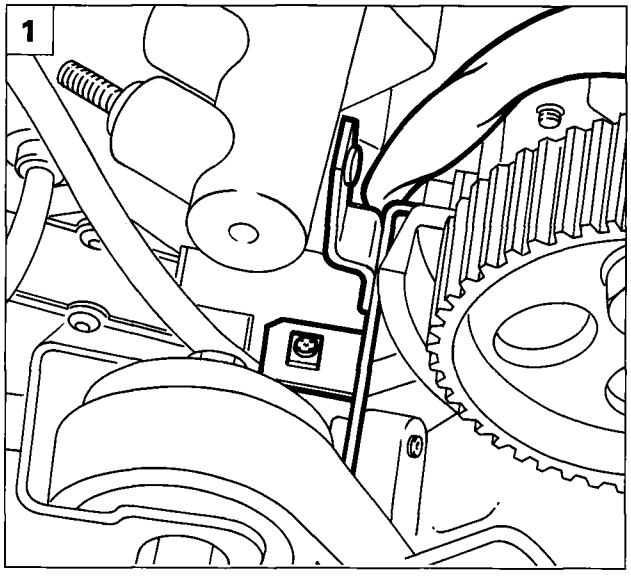

P4F20CX01

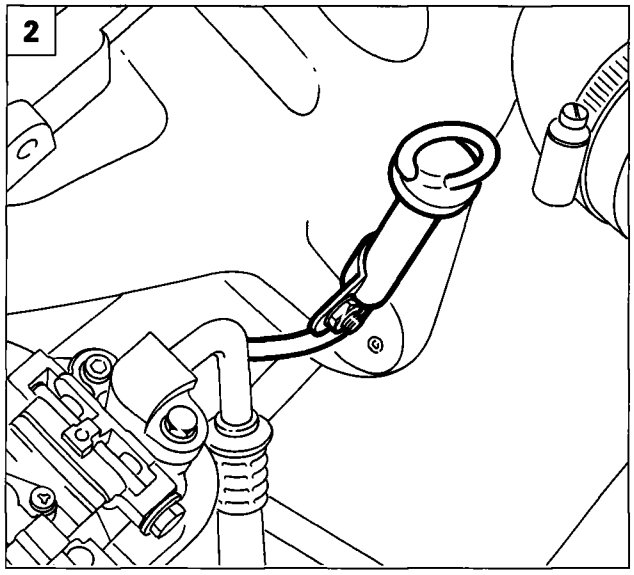

P4F20CX02

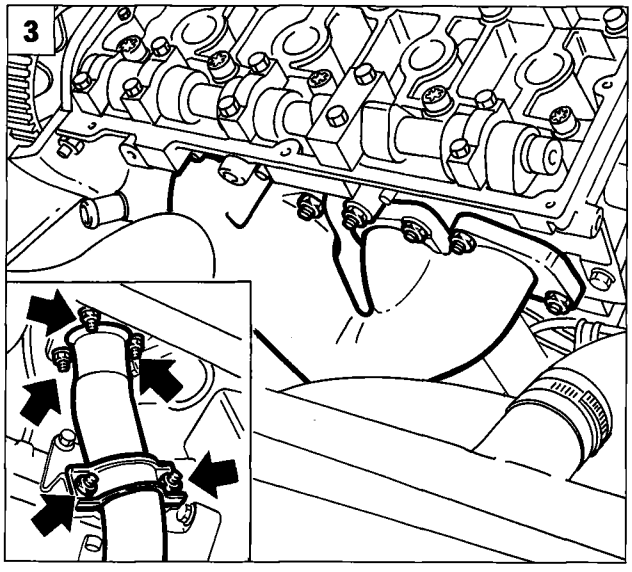

P4F20CX03

1. Undo the bolt fixing the ignition coil supply wiring retaining bracket.
2. Remove the nut fixing the engine oil dip stick to the exhaust manifold.
3. Remove the nuts fixing the exhaust manifold to the cylinder head, then remove it from the engine compartment after having disconnected it from the fixings to the first section of the exhaust pipe shown in the inset.
4. Undo the bolts fixing the cylinder using tool 1852154000, then remove the cylinder head complete with inlet valve chest from the engine compartment.
5. Separate the inlet valve chest from the cylinder head acting on the fixing nuts.

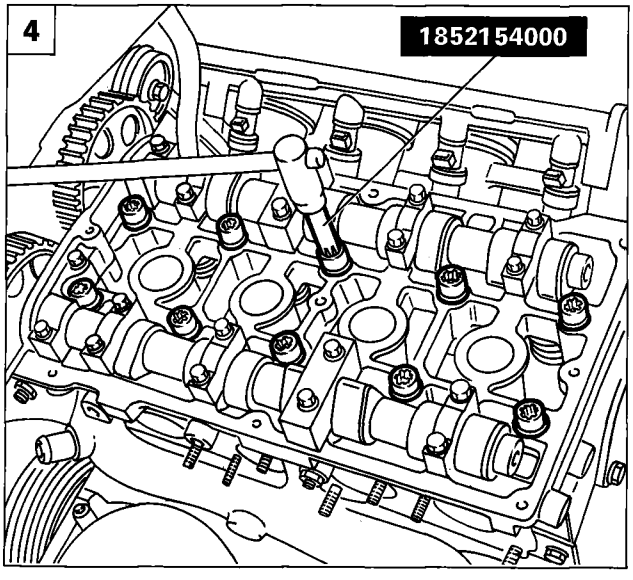

P4F20CX04

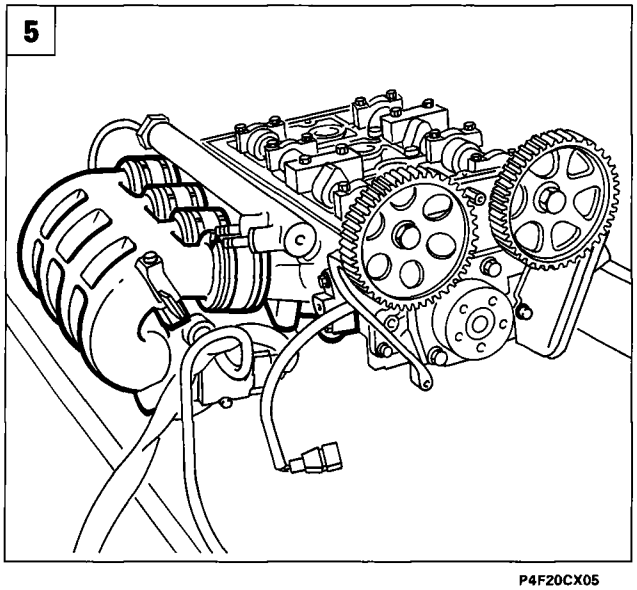

P4F20CX05

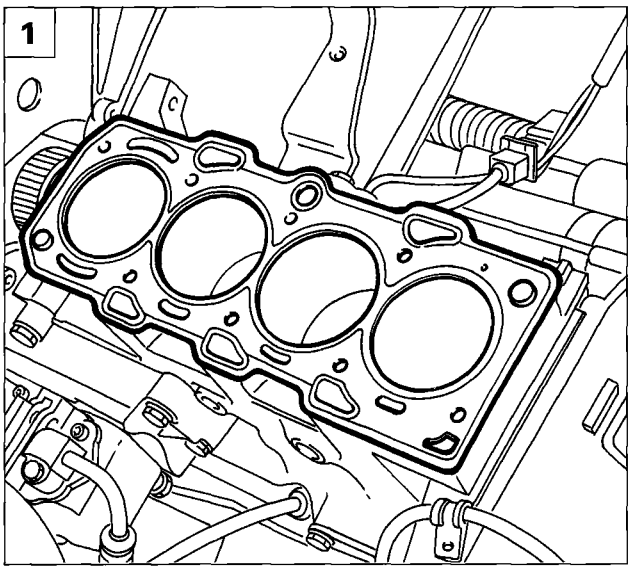

P4F21CX01

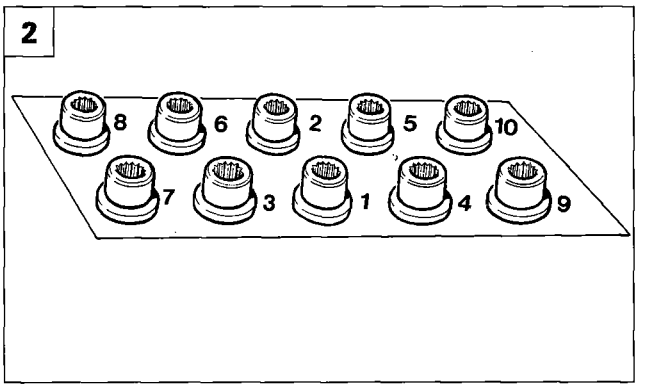

P4F21CX02

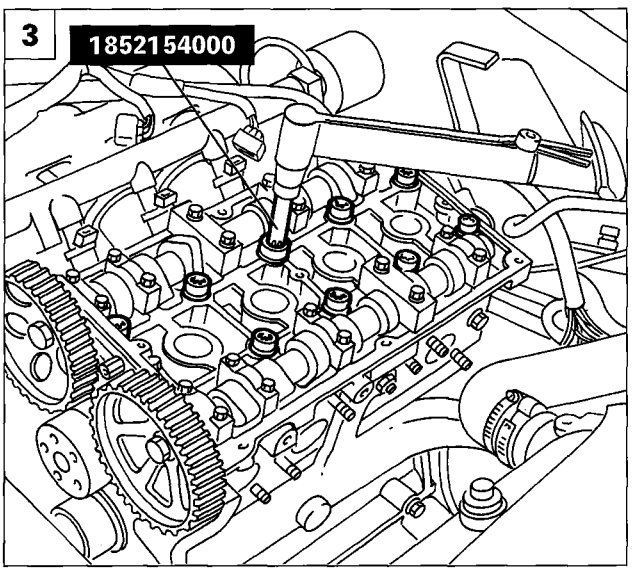

P4F21CX03

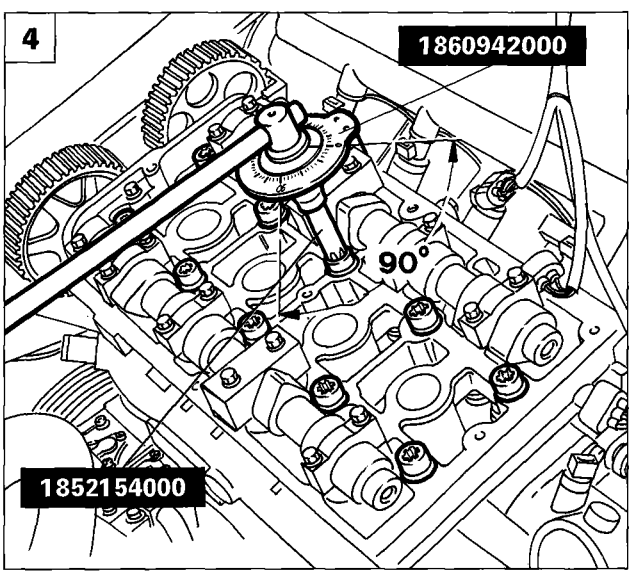

P4F21CX04

Refitting

1. Position the cylinder head gasket with the word "ALTO" facing towards the operator.

ASTADUR type cylinder head gaskets are used. On account of the special material from which they are made, these gaskets undergo a polymerization process during the operation of the engine, so that they harden considerably during usage. In order for the polymerization of the cylinder head gaskets to take place it is necessary:

- *to keep the gasket in its sealed nylon container;*
- *to only take it out of its container shortly before fitting;*
- *not to lubricate or get oil on the gasket, taking care that the surfaces of the cylinder head and crankcase are clean.*

2. Position the cylinder head, then proceed to tighten the fixing bolts to torque, bearing in mind that for each tightening stage described, the order is the illlustrated in the diagram.
3. Lubricate the bolts and washer and leave them to drain for at least 30 minutes; tighten the bolts to a torque of 2 daNm, then tighten to a torque of 4 daNm using spanner 1852154000.
4. Tighten the bolts throughi 270° in three distinct stages (90° + 90° + 90°) using spanners 1852154000 and 1860942000.

Refit the remaining components reversing the procedure described for the removal. Fit and tension the timing belt and the auxiliary shaft belt as described in the previous paragraphs.

10.

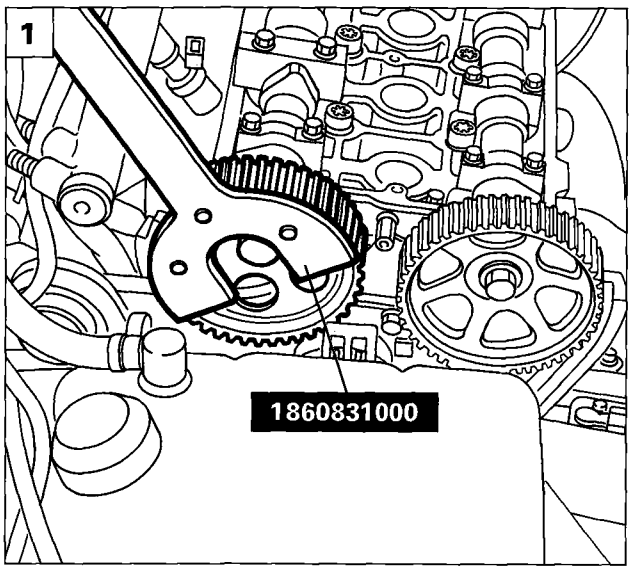

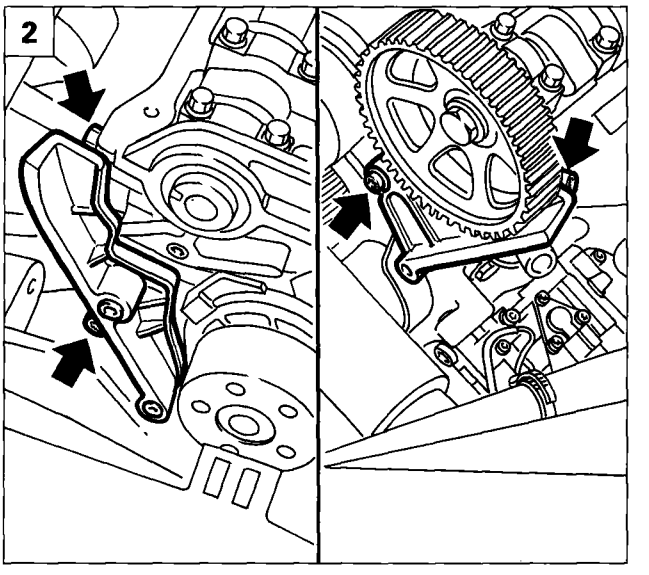

P4F22CX02

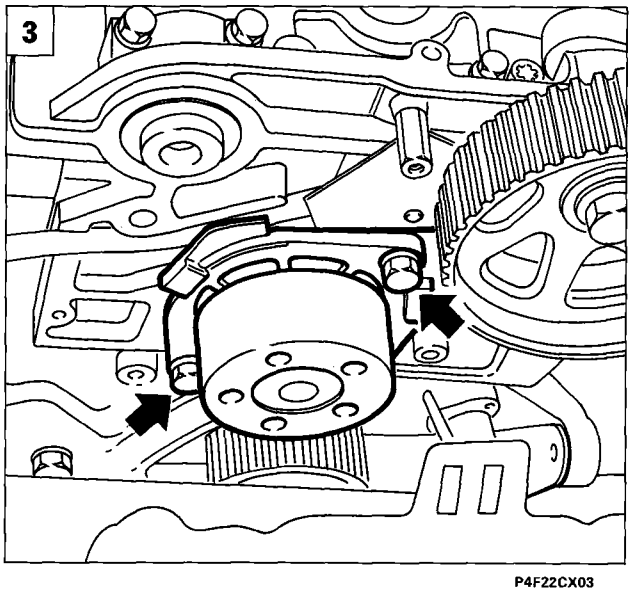

P4F22CX03

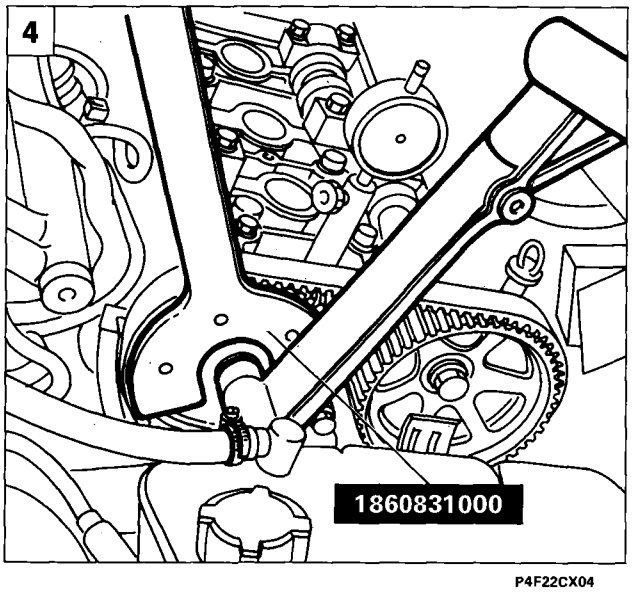

P4F22CX04

REMOVING-REFITTING WATER PUMP

Before proceeding with the removal of the water pump, remove the auxiliary shaft and timing belts as described in the previous paragraphs.

1. Remove the camshaft pulley, inlet side using tool 1860831000.
2. Remove the shields shown in the diagram.
3. Remove the water pump acting on the fixing bolts.
4. Refit the components removed previously tightening the inlet side camshaft pulley fixing bolt to a torque of 11.8 daNm using tool 1860831000. Position and tension the timing and auxiliary shaft belts as described in the previous paragraphs.

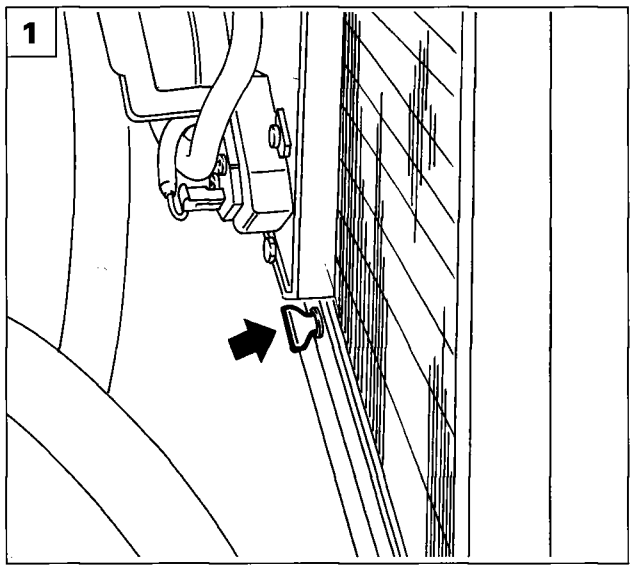

P4F23CX01

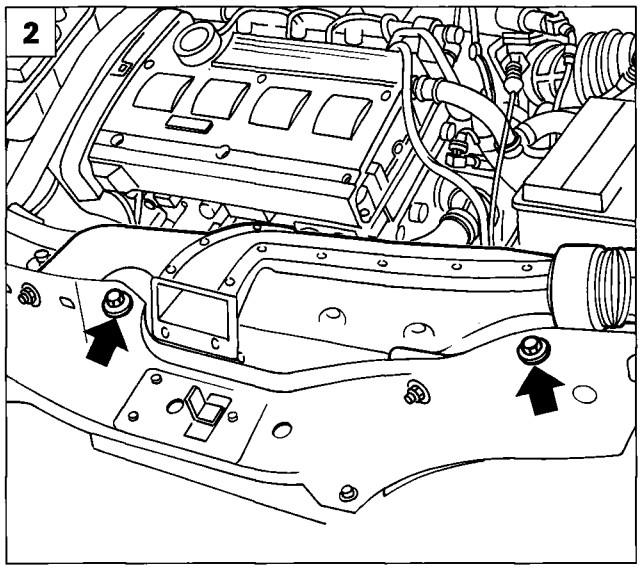

P4F23CX02

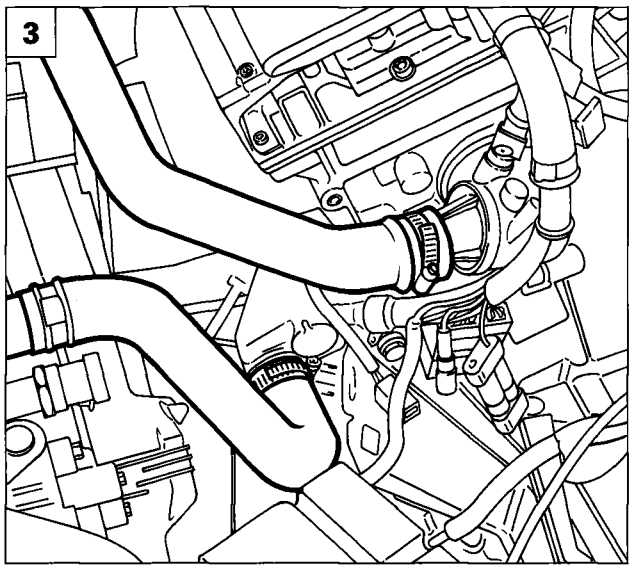

P4F23CX03

REMOVING-REFITTING RADIATOR

1. Disconnect the negative battery lead, then drain the coolant acting on the appropriate tap shown in the diagram.
2. Remove the air intake duct acting on the fixing bolts shown in the diagram.
3. Remove the two coolant inlet and outlet pipes shown from the radiator.
4. Disconnect the supply connections for the electric fan, undo the bolts fixing it to the radiator, then remove it from the vehicle.
5. Undo the upper bolts and then loosen the lower ones, fixing the condenser to the radiator.

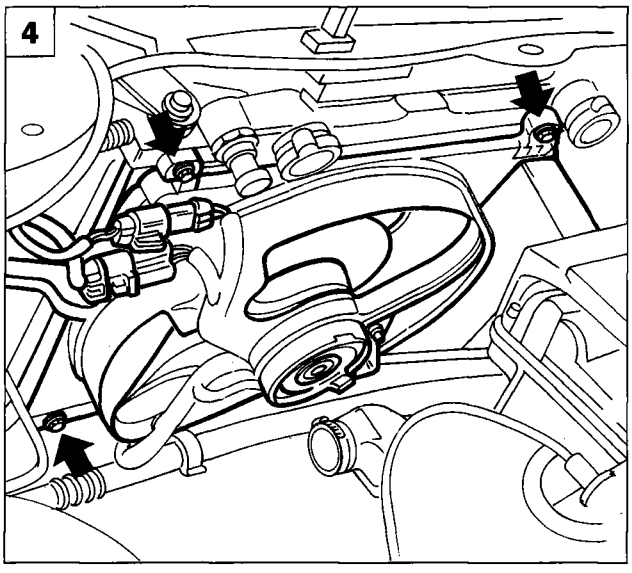

P4F23CX04

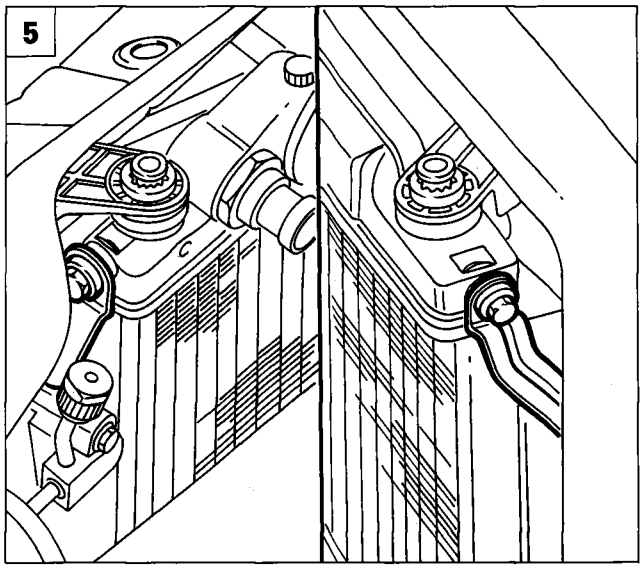

P4F23CX05

Copyright by Fiat Auto

10.

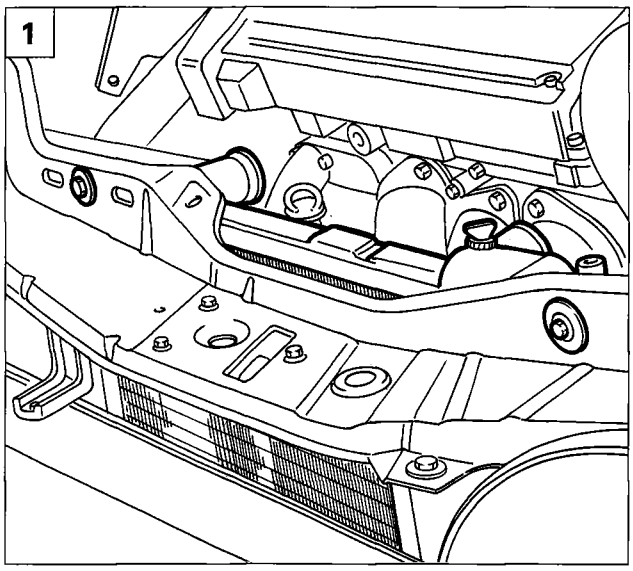

P4F24CX01

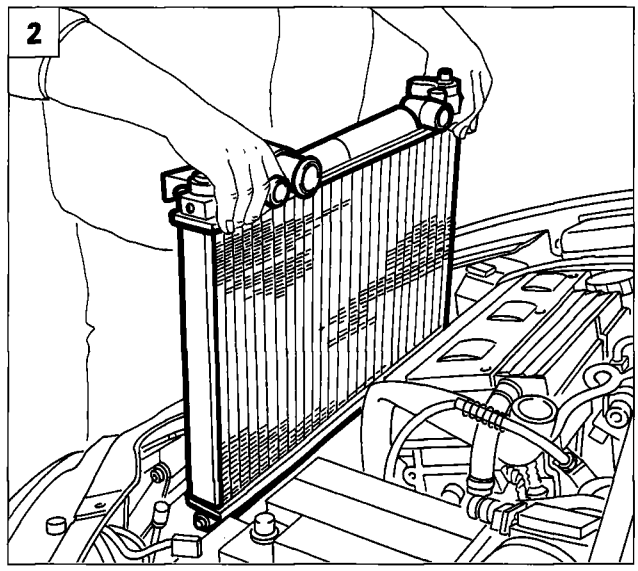

P4F24CX02

1. Remove the bolts fixing the radiator to the front cross member.
2. Move the radiator away from the condenser and suitably attach the latter, then extract the radiator from the engine compartment.

PROCEDURE FOR REFILLING THE ENGINE COOLING CIRCUIT (version with heater)

1. Make sure that the cooling system components (engine, heater, radiator, etc.) are completely empty.
2. Open the bleed valve (A) on the radiator.
3. Disconnect the connecting pipe between the thermostat and the butterfly casing (shown by the arrow in the diagram overleaf). Blow through with an air jet in the pipes in order to drain the pipe in the section thermostat - butterfly casing - expansion tank.
   Restore the connection for the pipe using a new band.
4. Fill the system slowly introducing coolant (a mixture of 50% water and paraflu), until fluid comes out of the bleed valve (A) on the radiator, then close the bleed valve.
   Continue filling until the MAX level is reached on the expansion tank.
5. Start up the engine and keept it iding for 2 - 3 mins. Then carry out periodic accelerations up to 4000 rpm, at the same time introducing coolant into the expansion tank not beyond the MAX level.
   This operation should be carried out until the engine cooling fan comes on at least twice.
6. Top up, if necessary,, until a level midway between the MIN and MAX references on the expansion tank is reached.

NOTE *This last operation should be carried out after the engine has been allowed to cool down.*

If, during the operations described in point 5, the coolant boils, then the procedure should be halted to search for the defective component which should be replaced. The procedure should then be repeated.

Engine cooling circuit (version with heater)

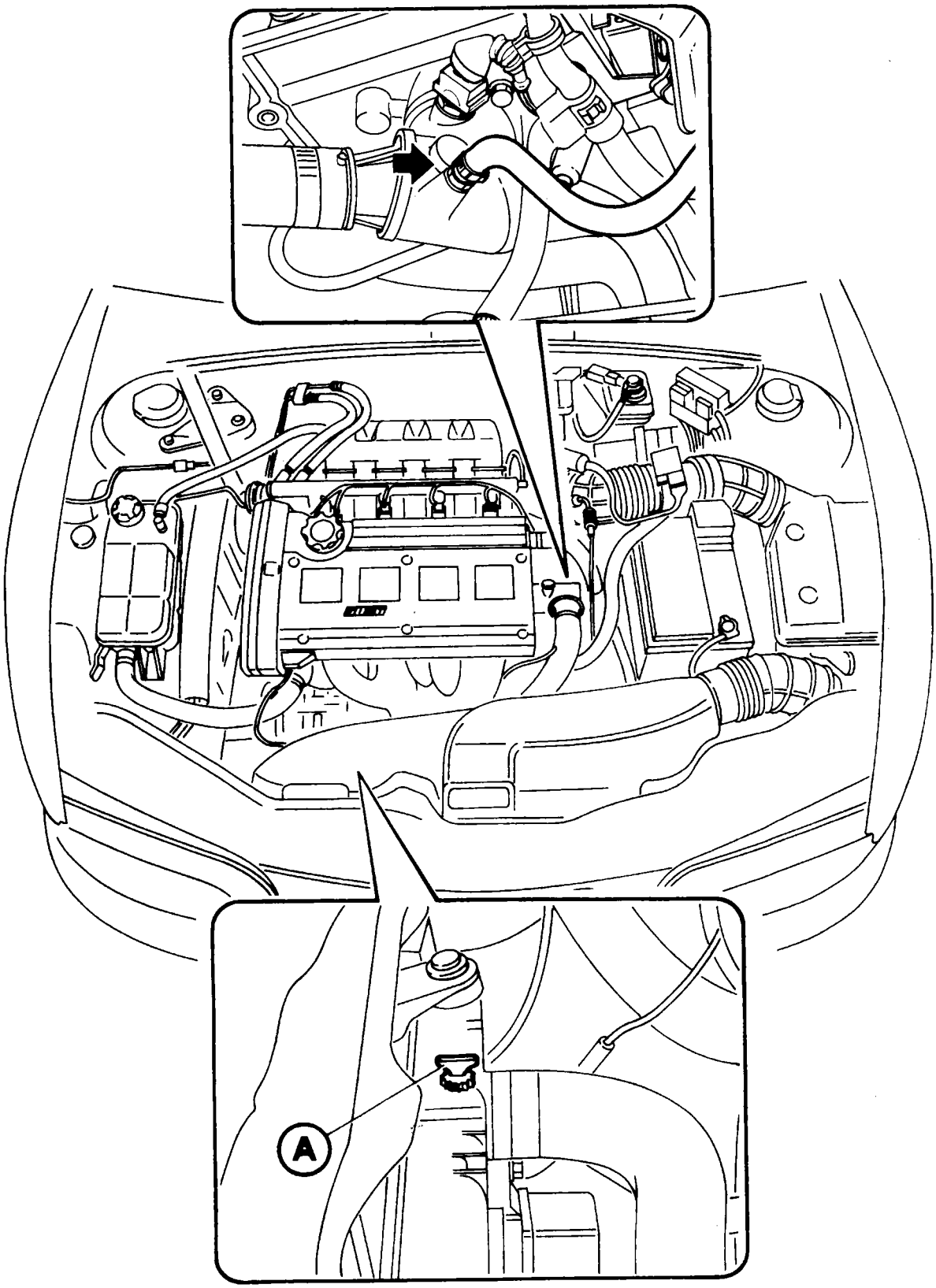

P4F25CX01

Copyright by Fiat Auto

10.

PROCEDURE FOR REFILLING THE ENGINE COOLING CIRCUIT (version with air conditioning)

1. Make sure that the cooling system components (engine, heater, radiator, etc.) are completely empty.
2. Open the two bleed valves (A and B) on the radiator.
3. Disconnect the connecting pipe between the thermostat and the butterfly casing (shown by the arrow in the diagram overleaf). Blow through with a jet of compressed air in the pipe in order to empty it in the section thermostat - butterfly casing - expansion tank.
   Restore the connection for the pipe using a new band.
4. Fill the system slowly introducing coolant (a mixture of 50% water and paraflu), until fluid comes out of the bleed valves (A and B) on the radiator, then close the bleed valves (A and B).
   Continue filling until the MAX level is reached on the expansion tank.
5. Start up the engine and let it idle for 2 - 3 mins. Then carry out gradual, periodic accelerations until 4000 rpm is reached, at the same time introducing the coolant into the expansion tank not beyond the MAX level.
   This operation should be carried out until the engine cooling fan comes on for the first time.
6. Top up, if necessary,, until a midway point between the MIN and MAX levels on the expansion tank is reached.

NOTE *This last operation should be carried out after the engine has been allowed to cool down.*

⚠ *If, during the operations described in point 5, the coolant boils, then the procedure should be halted to search for the defective component which should be replaced. The procedure should then be repeated.*

Positioning engine cooling radiator (version with air conditioning)

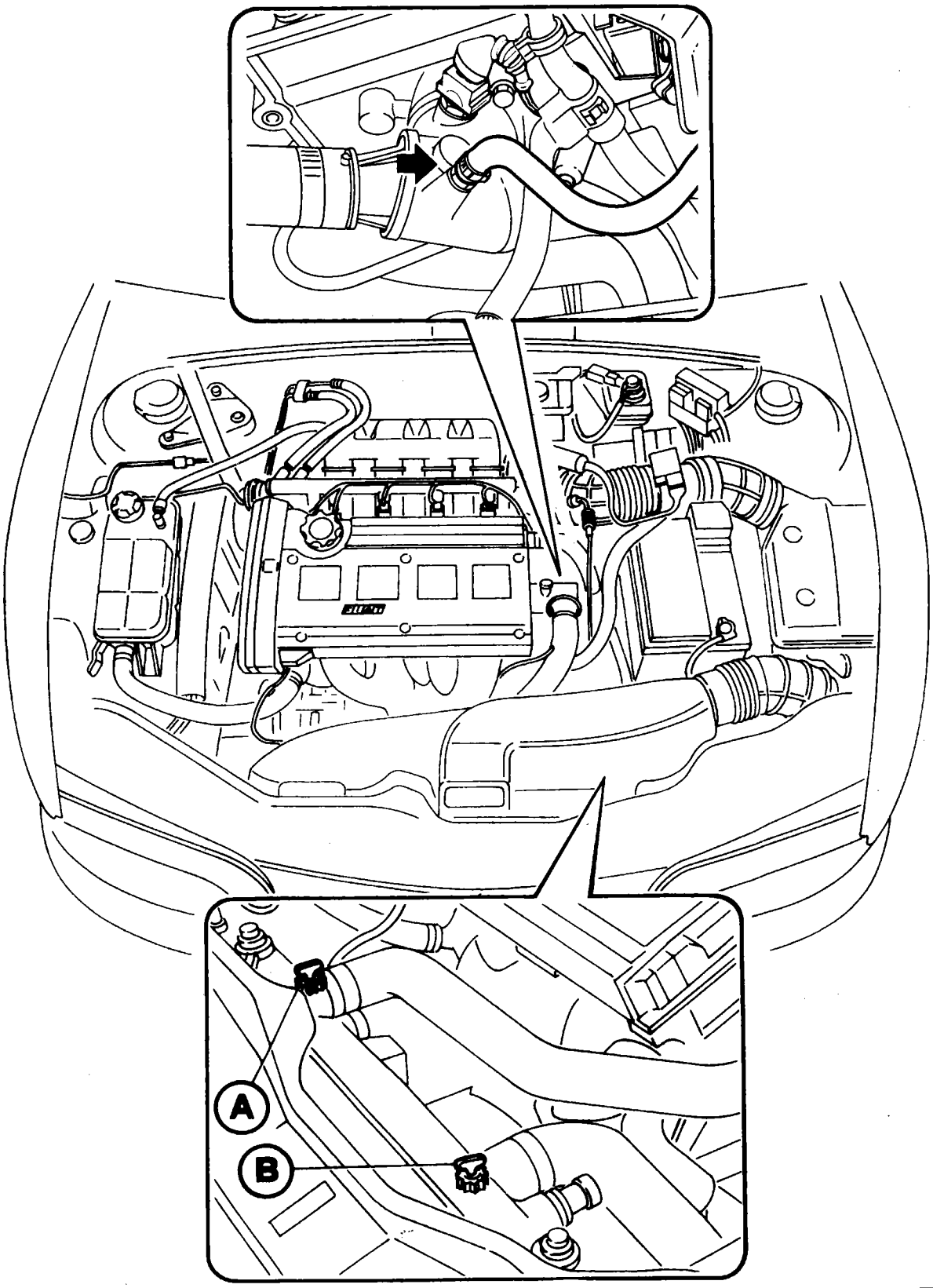

P4F27CX01

Copyright by Fiat Auto

page

REMOVING-REFITTING

- Removing-refitting power unit 1
- Removing-refitting timing drive belt 12
- Removing-refitting water pump 12

REMOVING-REFITTING RADIATOR

- Removing-refitting radiator 12
- Procedure for filling engine cooling circuit (version with heater) 14
- Procedure for filling engine cooling circuit (version with air conditioning) 16

Copyright by Fiat Auto

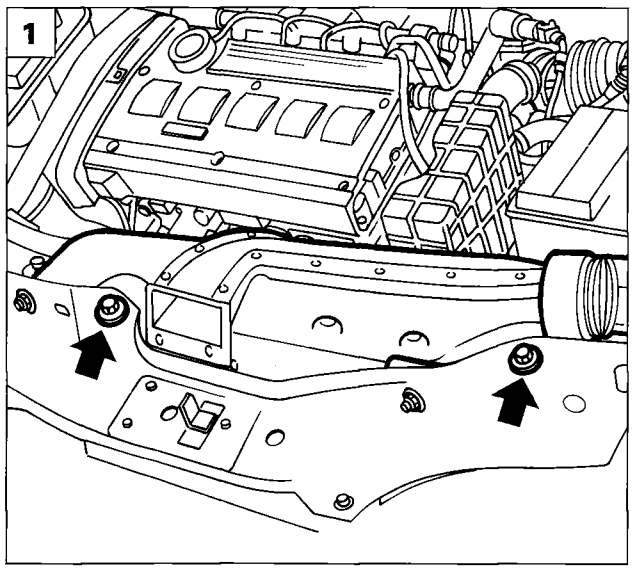

P4F01DX01

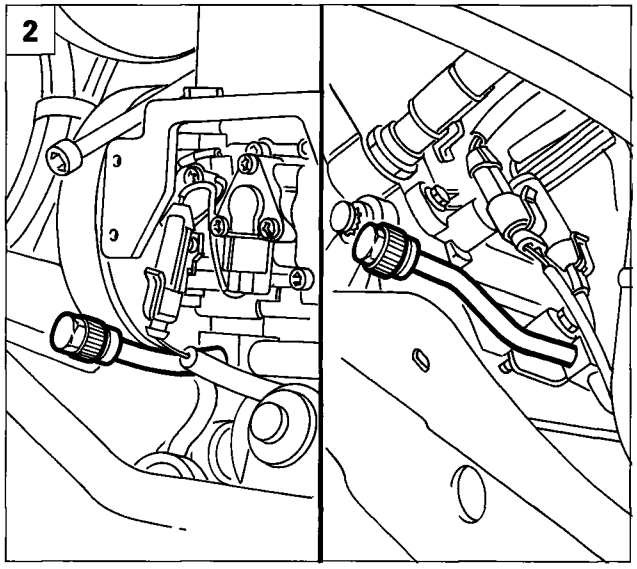

P4F01DX02

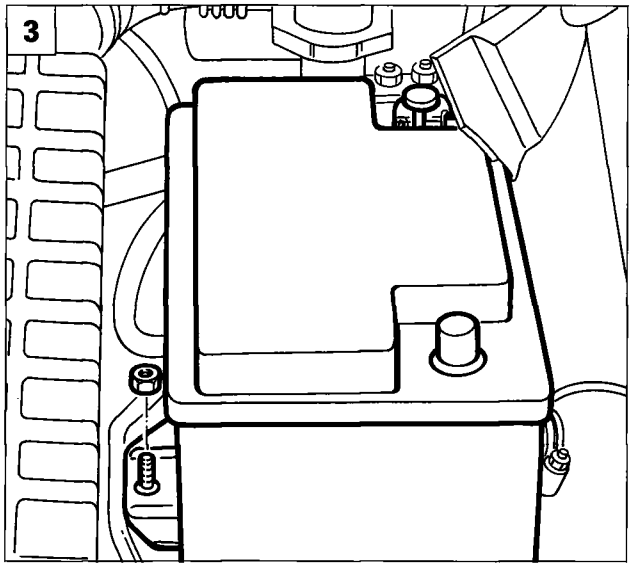

P4F01DX03

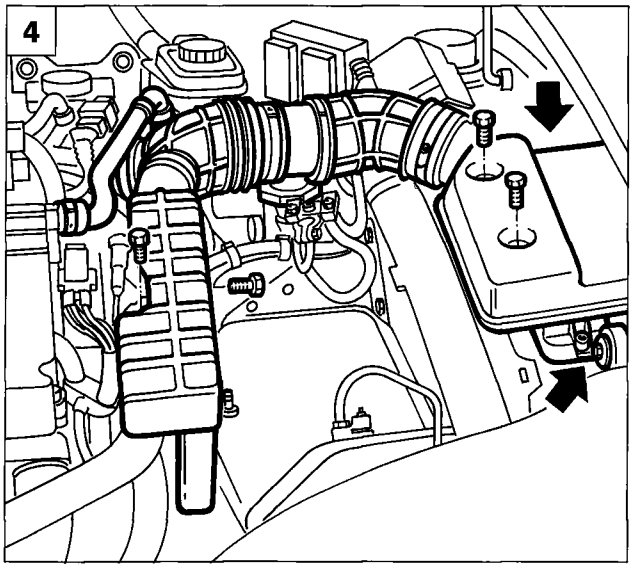

P4F01DX04

REMOVING-REFITTING POWER UNIT

Position the vehicle on *a* lift, remove the front wheels, then proceed as described below:

1. Remove the air intake duct acting on the bolts shown in the diagram.
2. Drain the air conditioning system connecting the special equipment to the needle valves shown in the diagram. Proceed as described in Section 50 of this manual.

Wear protective gloves and goggles during the operation of the draining the system as protection against possible contact with R 134 A fluid which is dangerous.
In order to facilitate the draining of the coolant fluid from the vehicle climate control system it is necessary to let the system and the engine run for 10 - 15 minutes.

3. Disconnect the negative and positive battery leads, then remove the battery from the engine compartment working on the nut fixing the retaining bracket.
4. Remove the fixings, shown in the diagram, for the connecting pipe between the air filter and the butterfly casing.

Copyright by Fiat Auto

10.

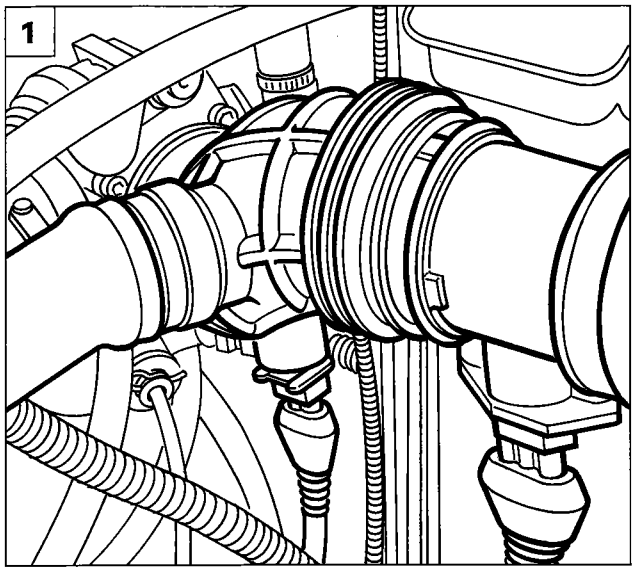

P4F02DX01

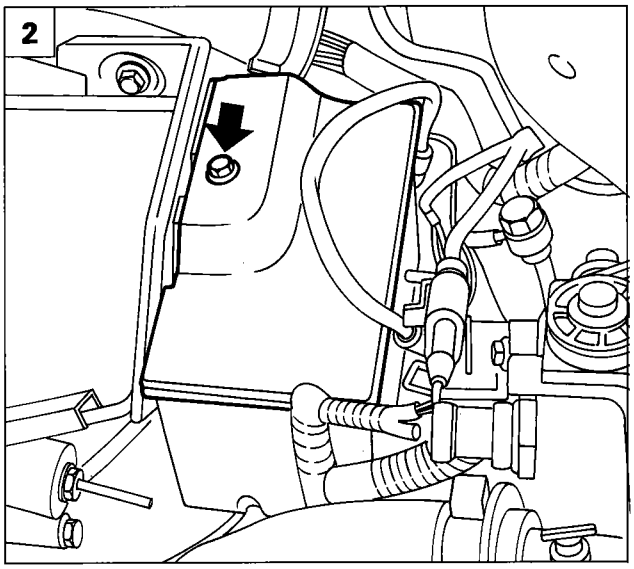

P4F02DX02

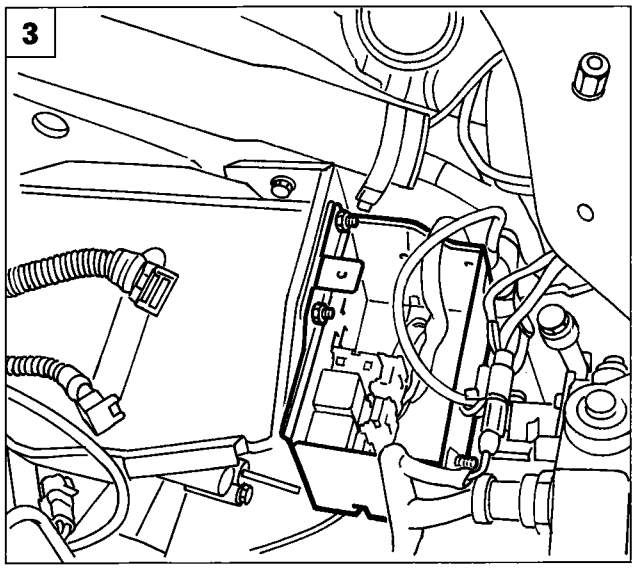

P4F02DX03

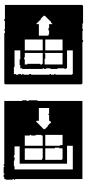

1. Disconnect the connections underneath the pipe connecting the air filter to the butterfly casing, then remove the pipe complete with resonator.
2. Remove the relay casing cover.
3. Remove the nuts fixing the relay casing to the battery drip tray, then place it to the side.
4. Remove the bolts (1) and loosen the bolt (2) di fixing the battery drip tray to the bodyshell.
5. Disconnect the earth cable from the gearbox and remove the hydraulic clutch operating cylinder.

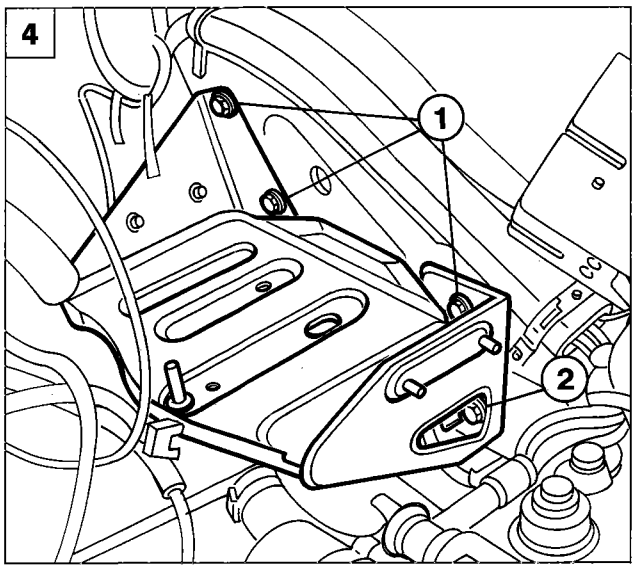

P4F02DX05

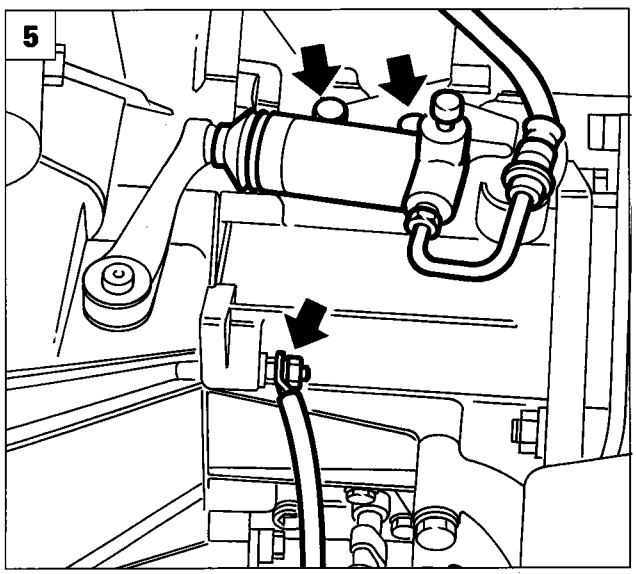

P4F02DX04

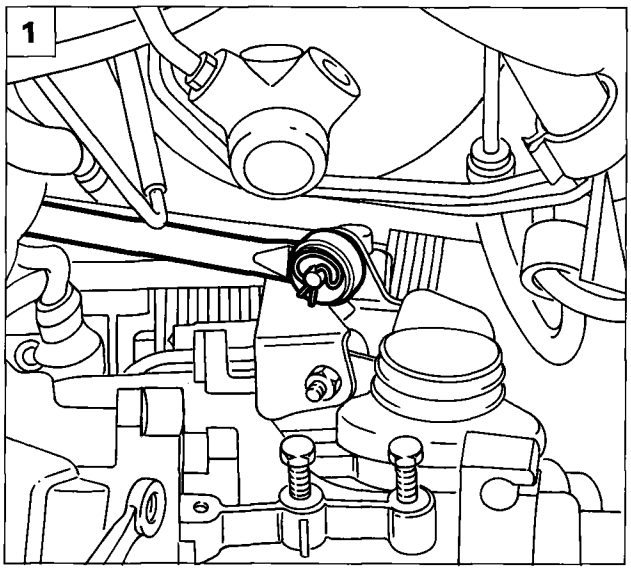

P4F03DX01

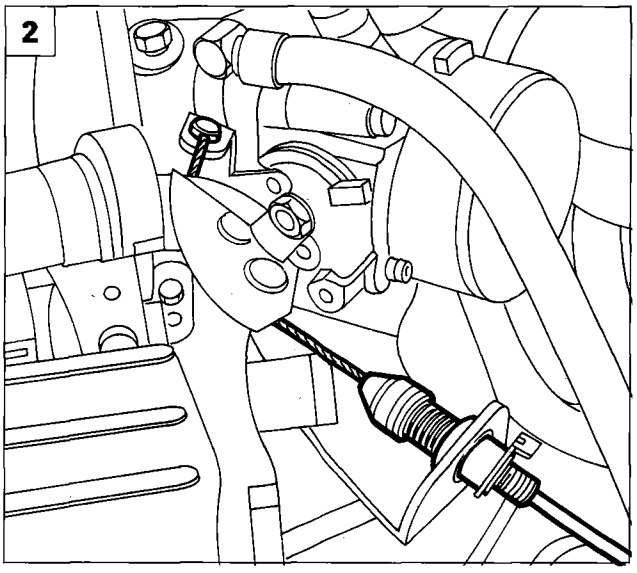

P4F03DX02

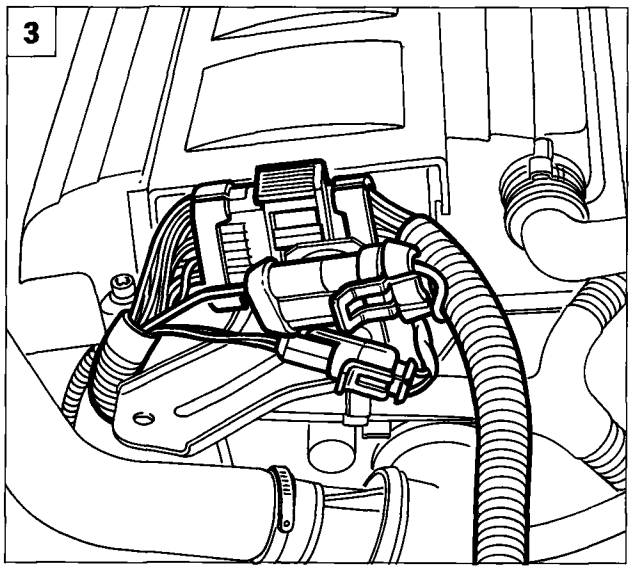

P4F03DX03

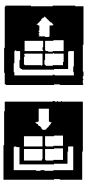

1. Disconnect the gear selector lever removing the split pin shown in the diagram.
2. Disconnect the accelerator cable from the butterfly casing.
3. Disconnect the injection cable/front cables couplings shown in the diagram.
4. Undo the nuts fixing the cables shown in the diagram to the positive battery terminal.
5. Disconnect the fuel supply and return pipes acting on the bands shown and releasing them from the mounting bracket.

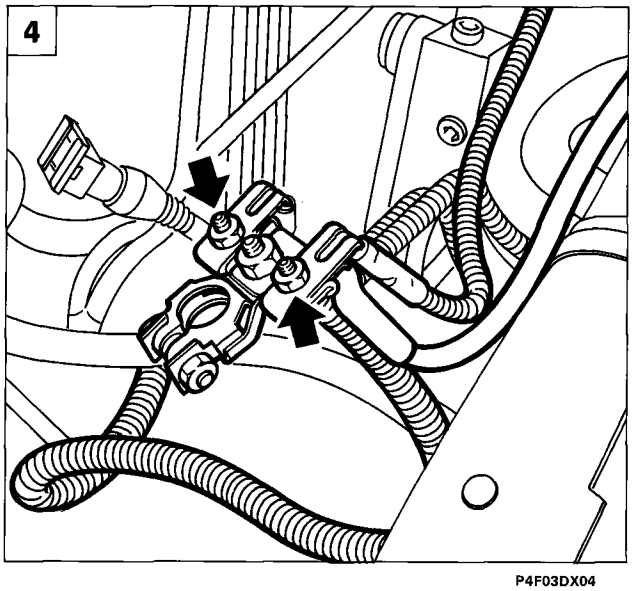

P4F03DX04

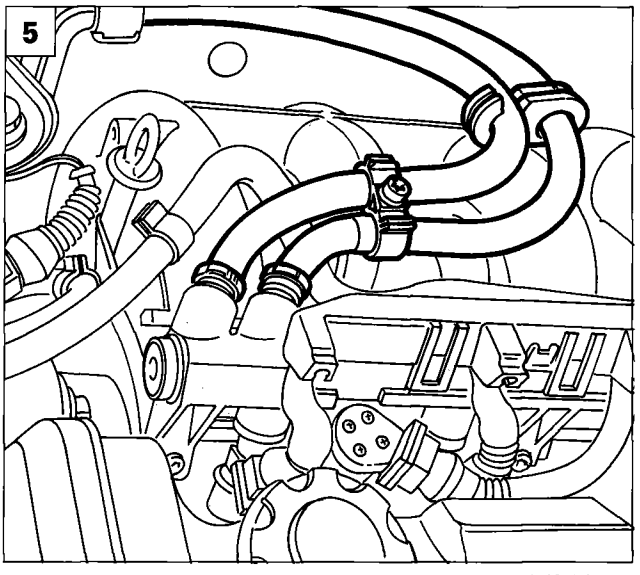

P4F03DX05

Copyright by Fiat Auto

10.

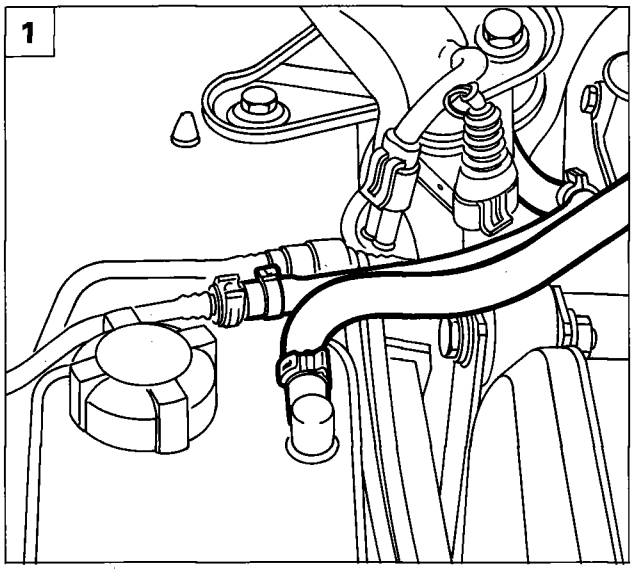

P4F04DX01

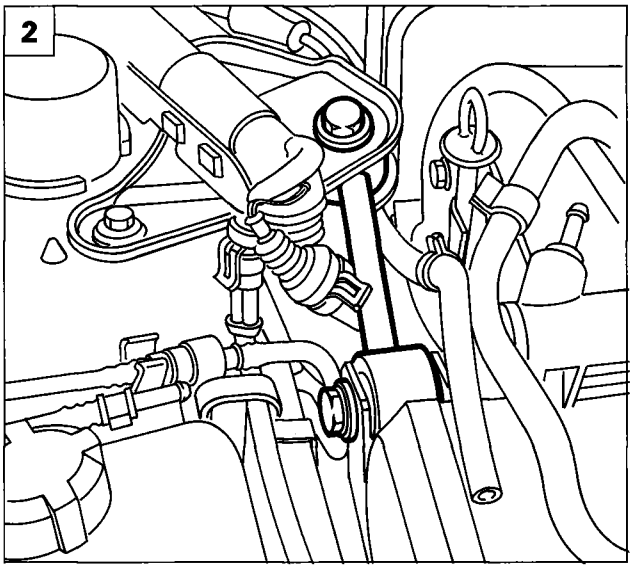

P4F04DX02

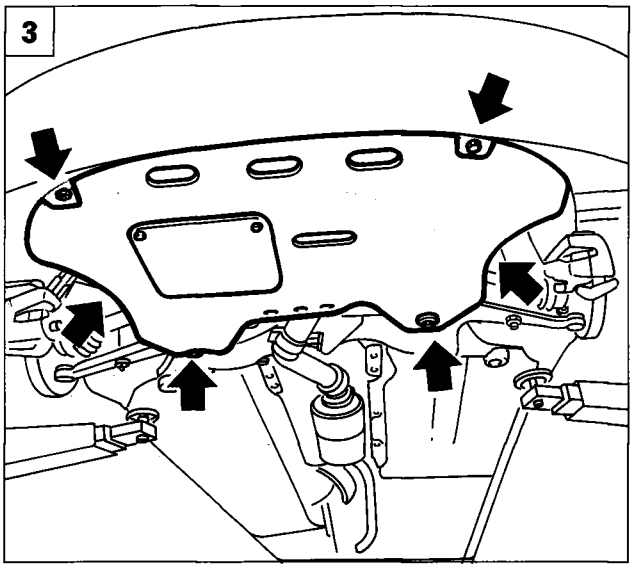

P4F04DX03

1. Disconnect the butterfly casing cooling pipe from the expansion tank; also disconnect the pipe for the anti-evaporation system shown in the diagram.
2. Remove the connecting rod acting on the appropriate fixing bolts.
3. Remove the engine compartment lower shield.
4. Place a suitable container under the radiator, then drain the coolant acting on the special tap in the lower part of the radiator.
5. Disconnect the two coolant pipes from the radiator.

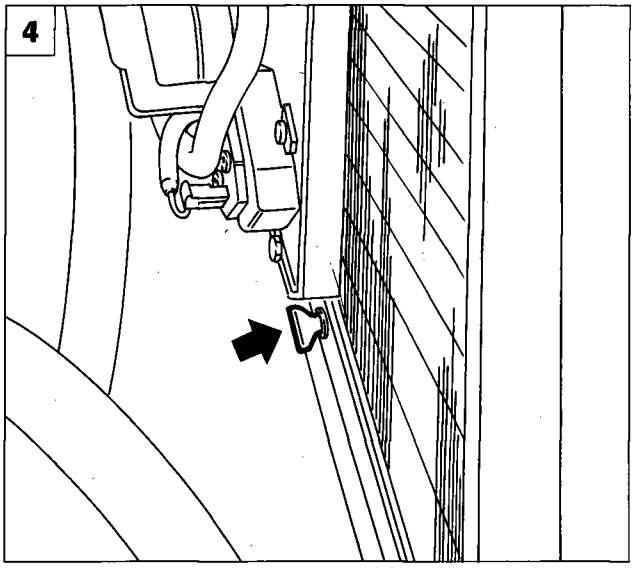

P4F04DX04

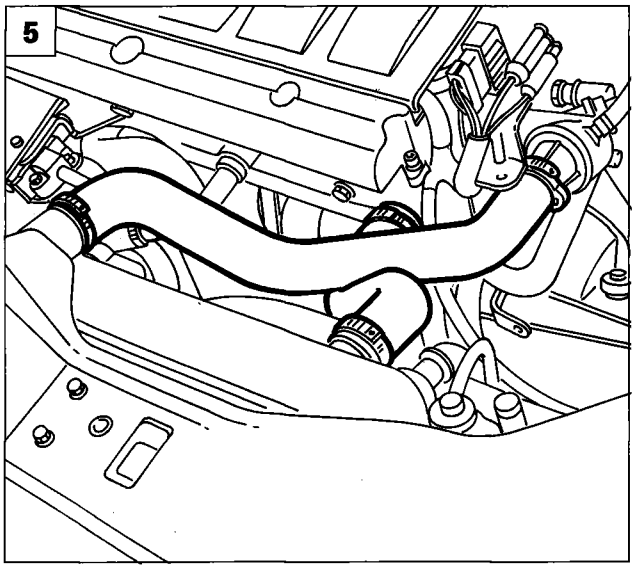

P4F04DX05

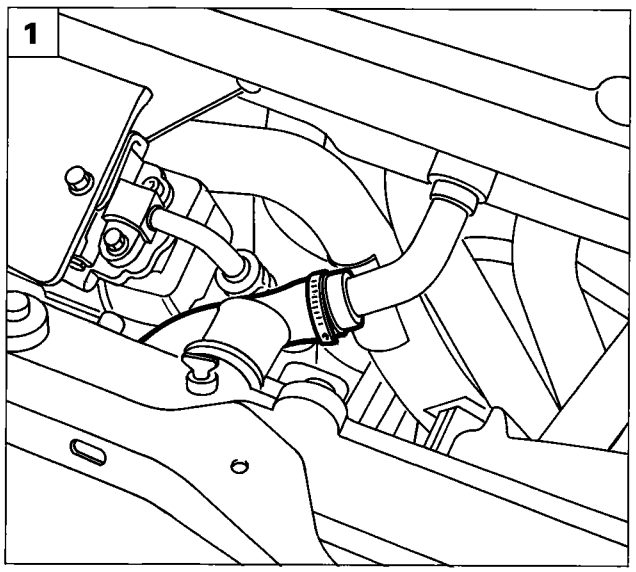

P4F05DX01

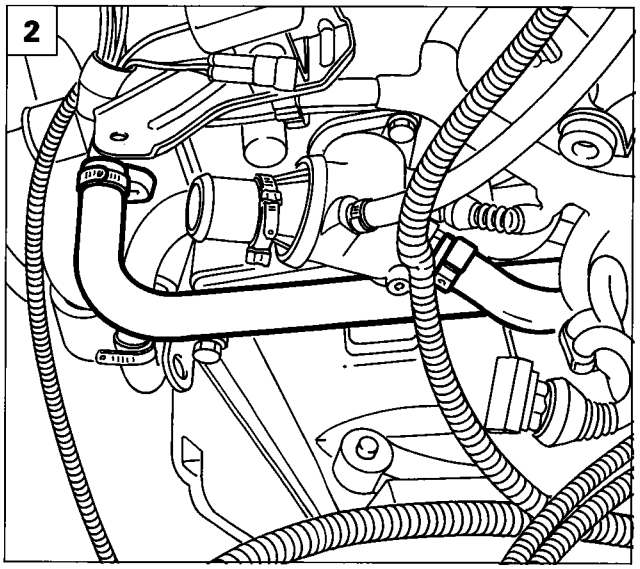

P4F05DX02

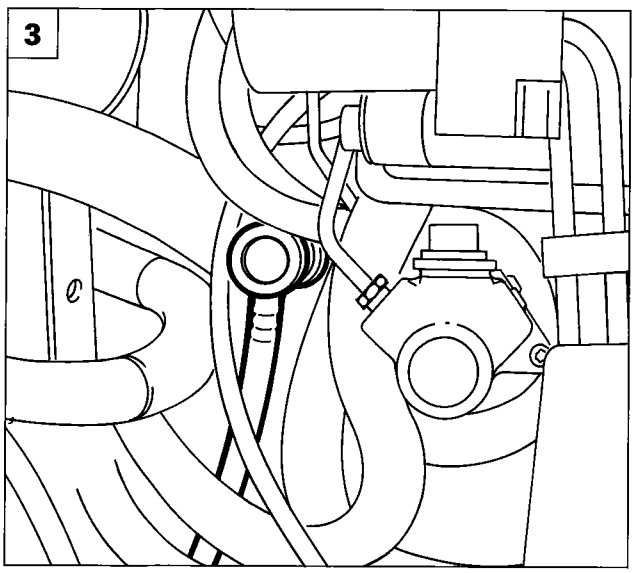

P4F05DX03

1. Remove the engine coolant pipe shown in the diagram.
2. Remove the coolant inlet and outlet pipes from the heater.
3. Disconnect the vacuum pipe from the brake servo.
4. Disconnect the Lambda sensor connection.
5. Drain the power assisted steering fluid from the reservoir.

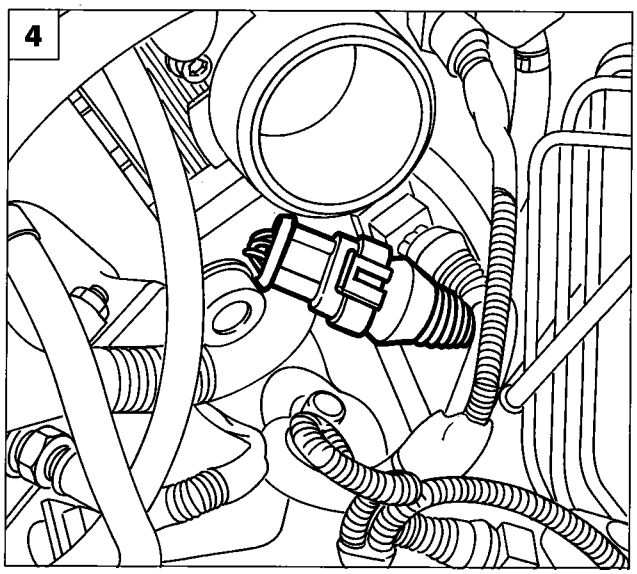

P4F05DX04

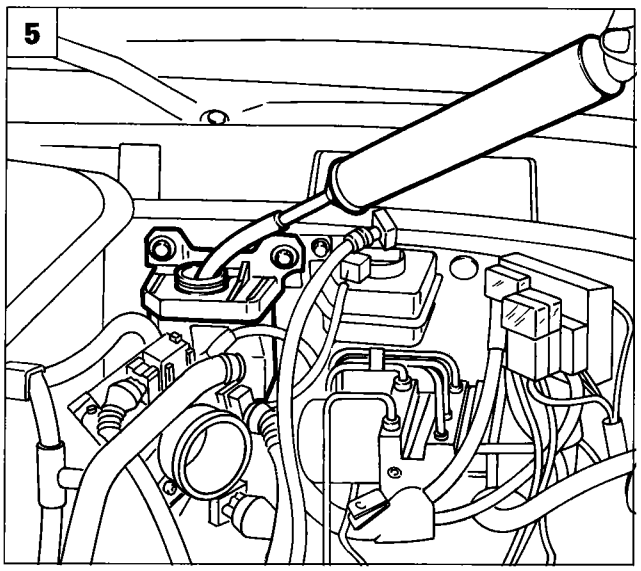

P4F05DX05

Copyright by Fiat Auto

10.

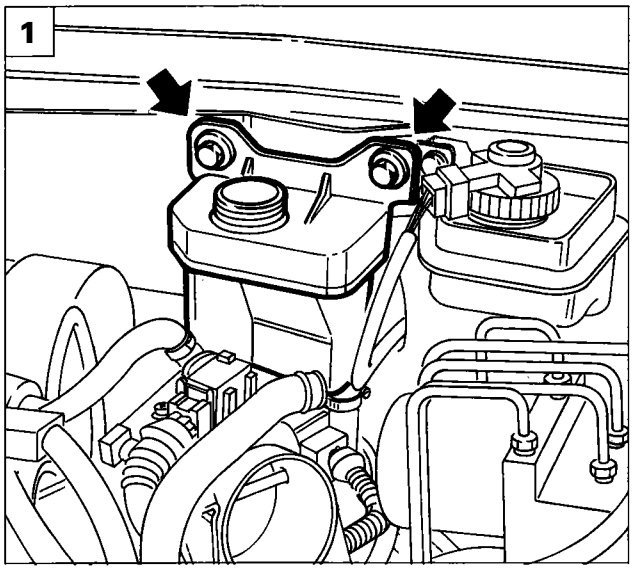

P4F06DX01

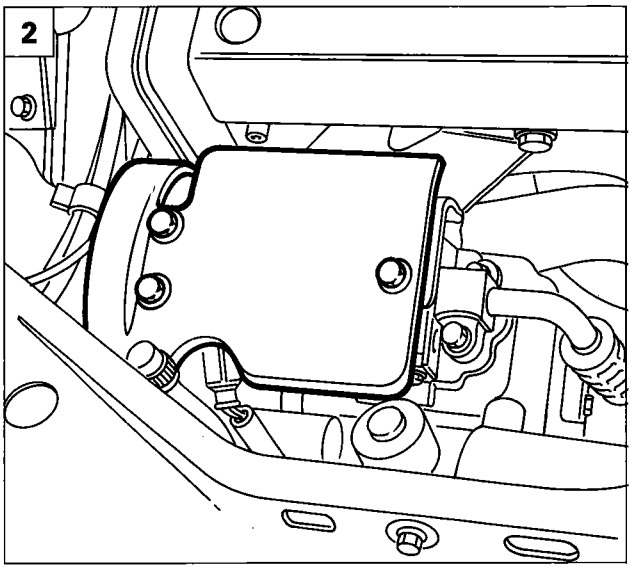

P4F06DX02

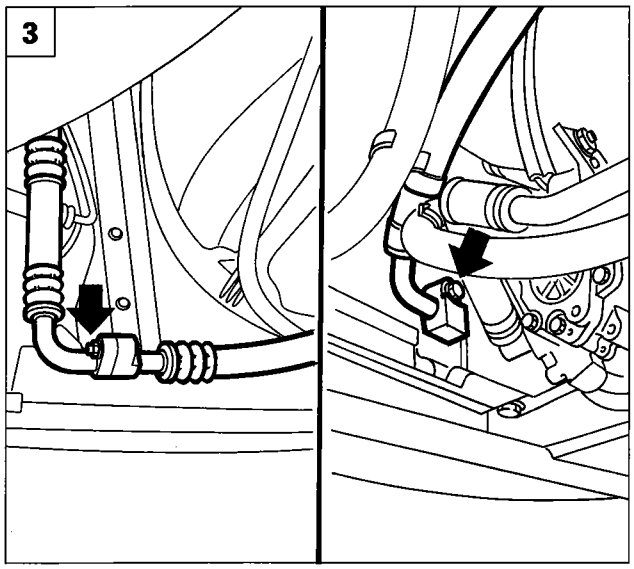

P4F06DX03

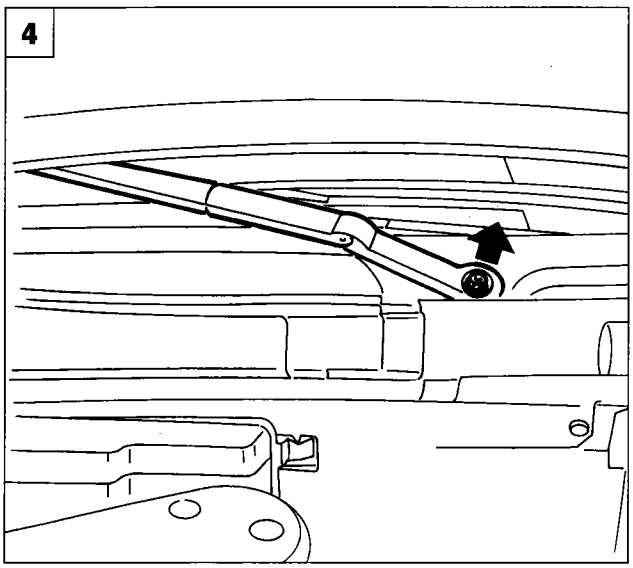

P4F06DX04

1. Undo the bolts fixing the power steering fluid reservoir; disconnect the pipe connected to the power steering pump, then temporarily fix the reservoir to the engine.
2. Remove the upper protective cover for the cliamte control compressor.
3. Disconnect the connection on the compressor and the pipes connecting the climate control compressor to the evaporator and the compressor to the condenser.

Seal the disconnected pipes with a suitable plug so that the climate control system does not absorb any dampness which would adversely affect its operation.

4. Remove the windscreen wiper blade acting on the fixing nut.
5. Remove the right side shield for the pollen filter; to facilitate its removal loosen the bolts fixing the left shield.

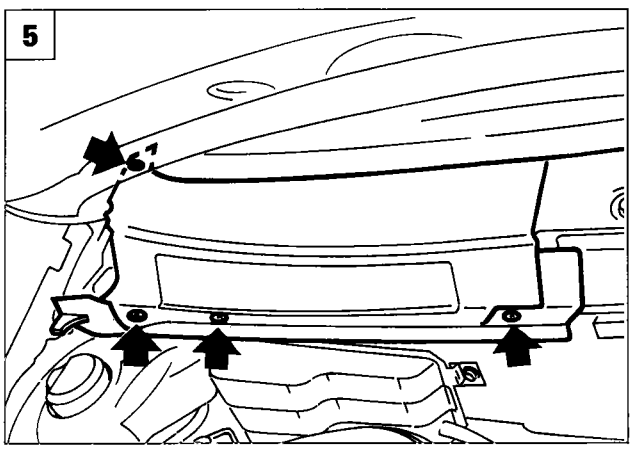

P4F06DX05

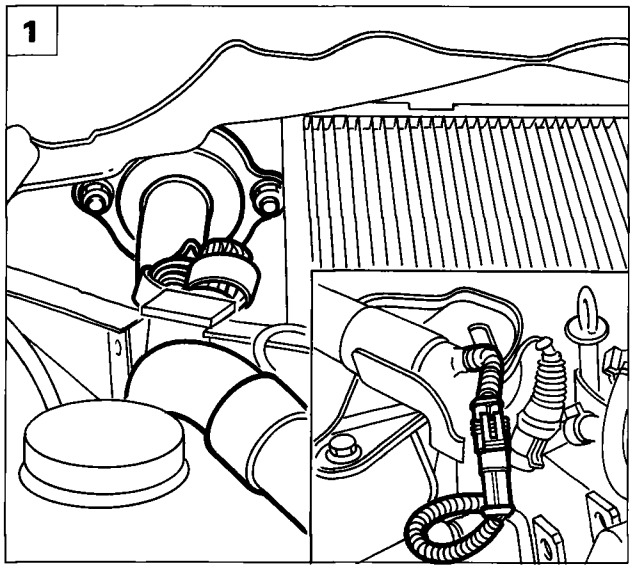

P4F07DX01

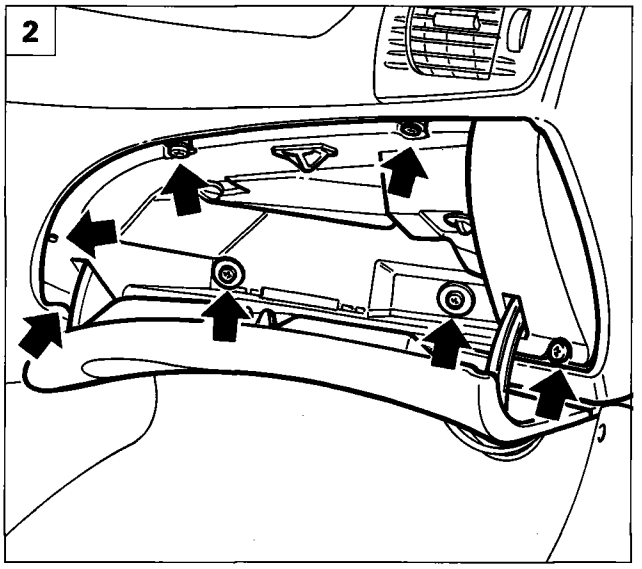

P4F07DX02

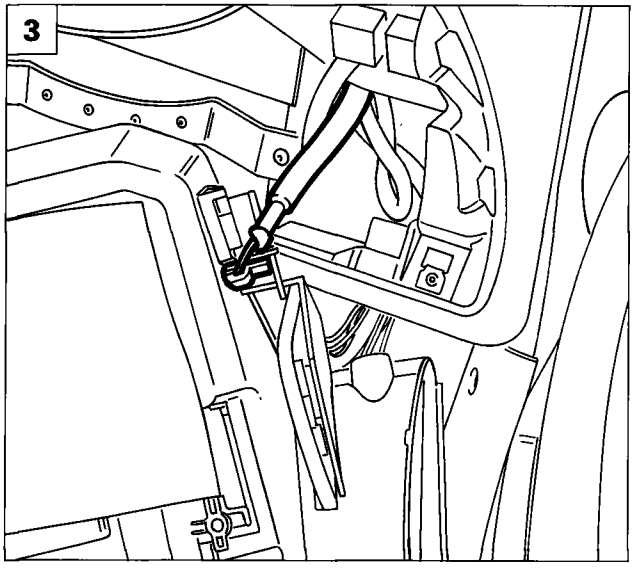

P4F07DX03

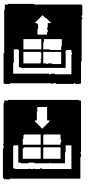

1. Undo the retaining bracket for the injection cables from the bulkhead between the passenger compartment and the engine compartment and disconnect the connector shown in theinset.
2. Working from inside the vehicle, remove the glove compartment.
3. Disconnect the electrical supply connector for the glove compartment light.
4. Disconnect the electrical connection from the injection/ignition control unit and the fuses/relays from the appropriate mounting bracket, then extract the wiring through the opening in the bulkhead between the engine compartment and the passenger compartment.
5. Disconnect the first section of the exhaust pipe acting on the fixings shown in the diagram;.

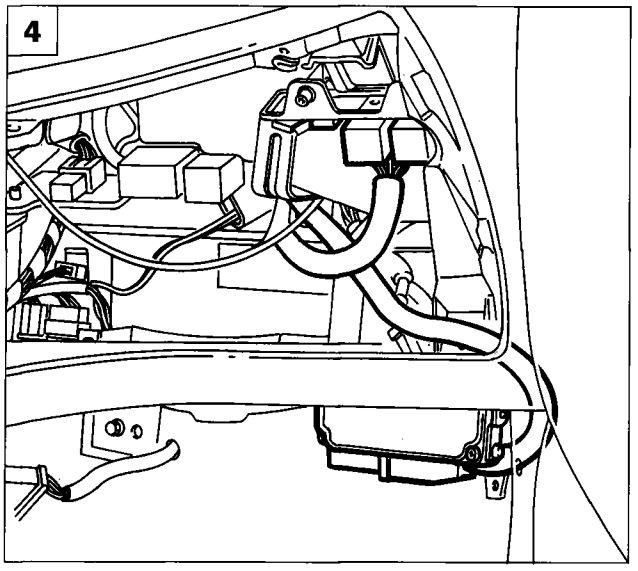

P4F07DX04

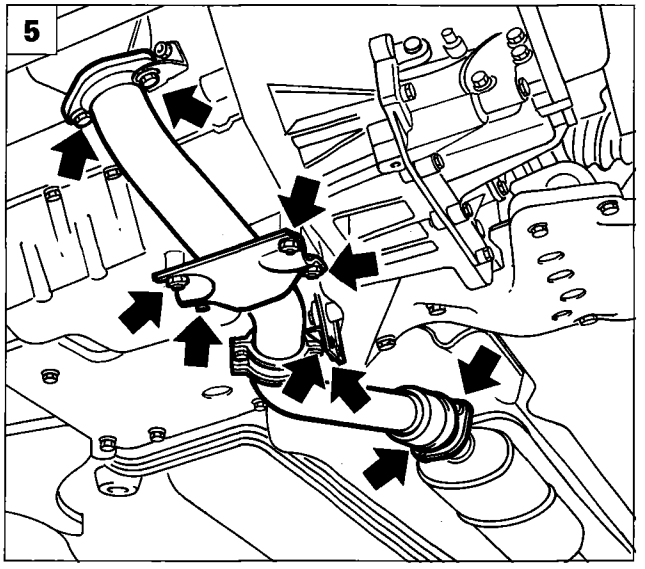

P4F07DX05

10.

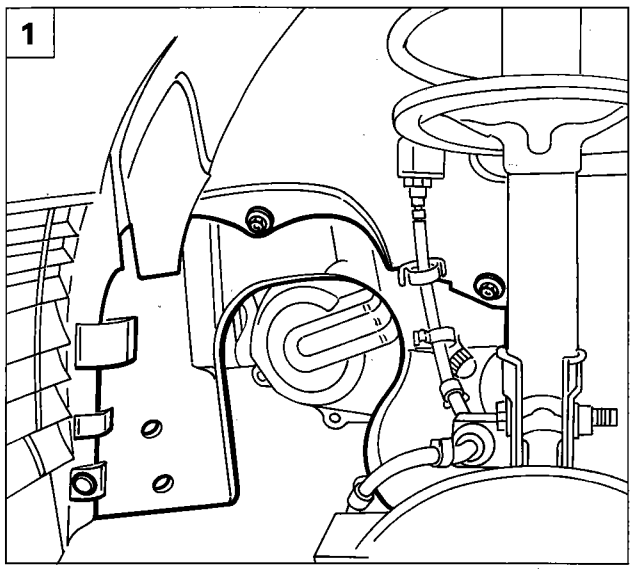

P4F08DX01

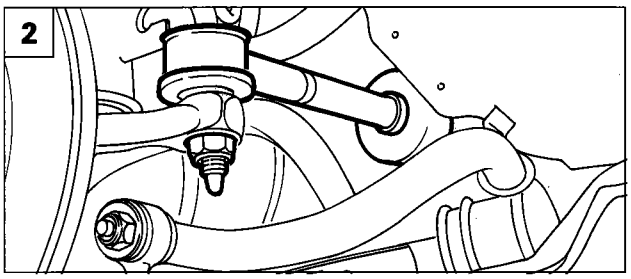

P4F08DX02

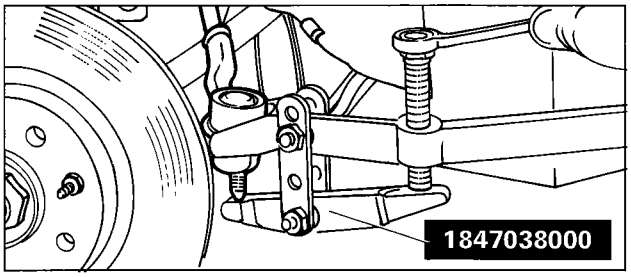

P4F08DX03

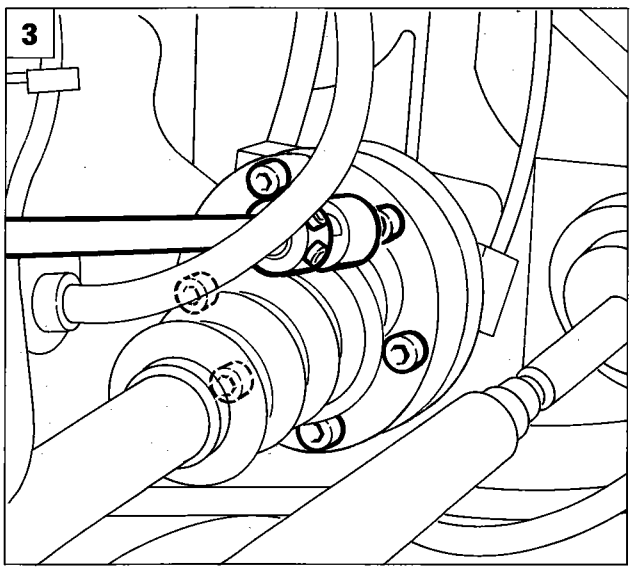

P4F08DX04

1. Remove the gearbox side and timing side wheel arch liner.
2. Disconnect the steering track rod end from the steering knuckle (gearbox side and timing side) using extractor 1847038000.
3. Undo the bolts fixing the left drive shaft flange.
4. Undo the bolts fixing the right drive shaft flange.
5. Disconnect the gear selector and engagement levers which are accessible from the gearbox side wheel arch.

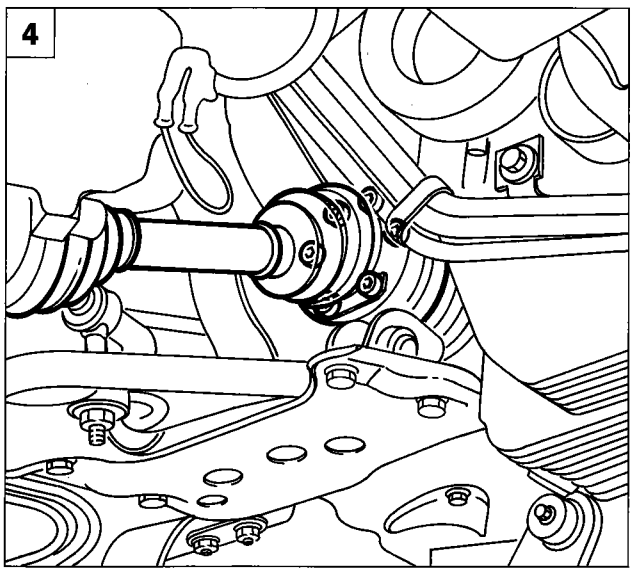

P4F08DX05

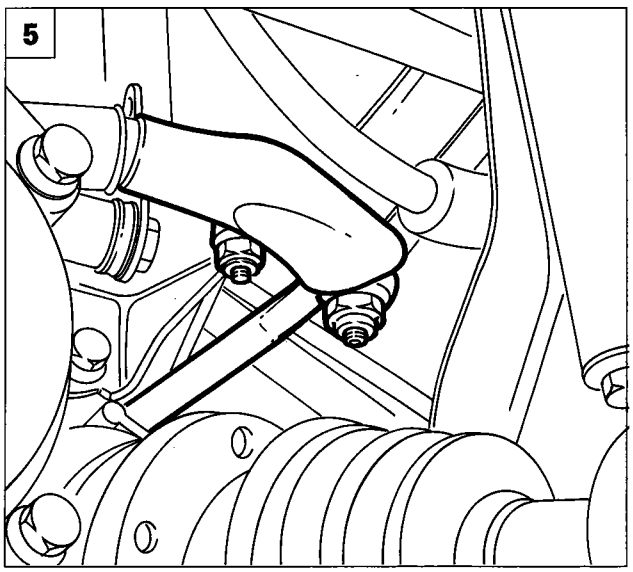

P4F08DX06

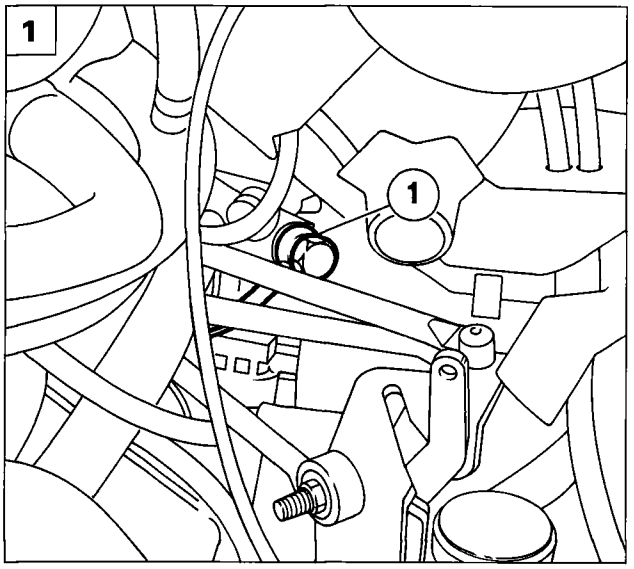

P4F09DX01

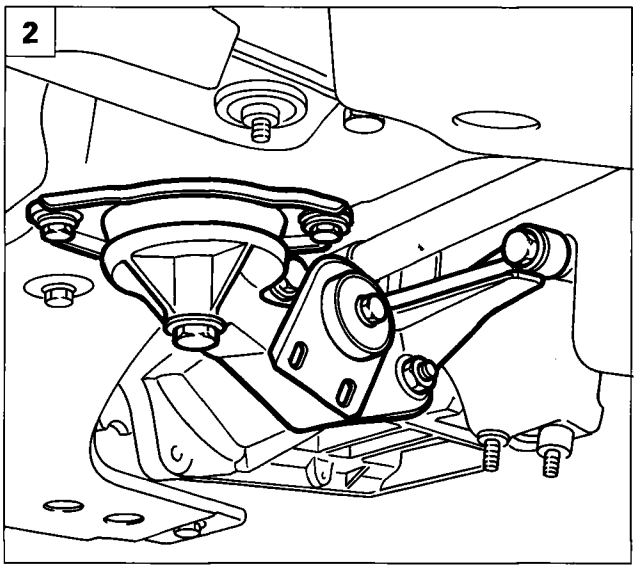

P4F09DX02

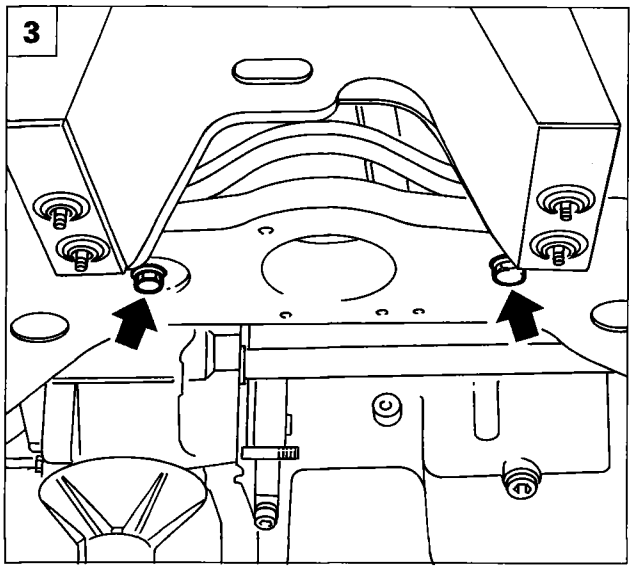

P4F09DX03

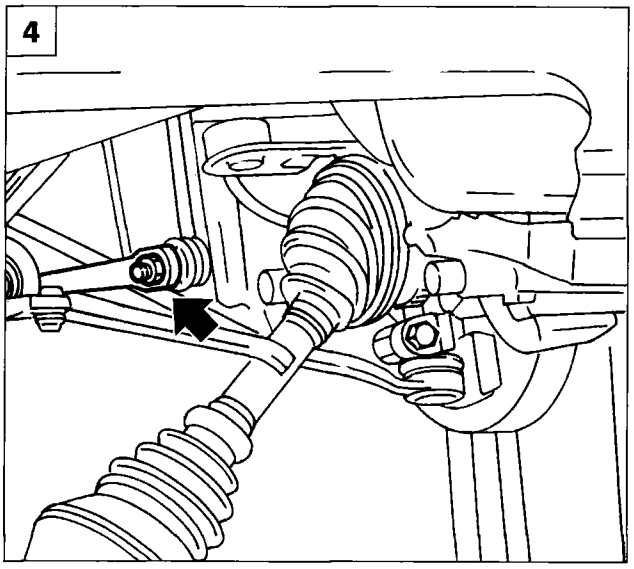

P4F09DX04

1. Disconnect the connector (1) for the pipe connecting the reservoir to the steering box from the steering box. Place a suitable container underneath to collect the residual fluid remaining inside the pipe.
2. Remove the centre power unit support.

Before proceeding with the removal of the centre engine support, place a hydraulic jack under the engine to support it and keep it in place until the power unit supporting tool is in position.

3. Remove the bolts fixing the power steering box to the cross member. Suitably attachthe actual box to the bodyshell.
4. Disconnect the connecting rods connecting the anti-roll bar to the rod (right side and left side) to allow the subsequent removal of the front cross member.

10.

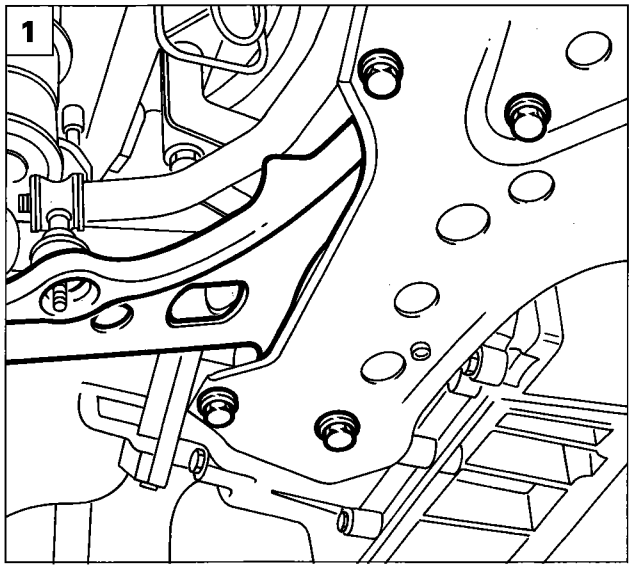

P4F10DX01

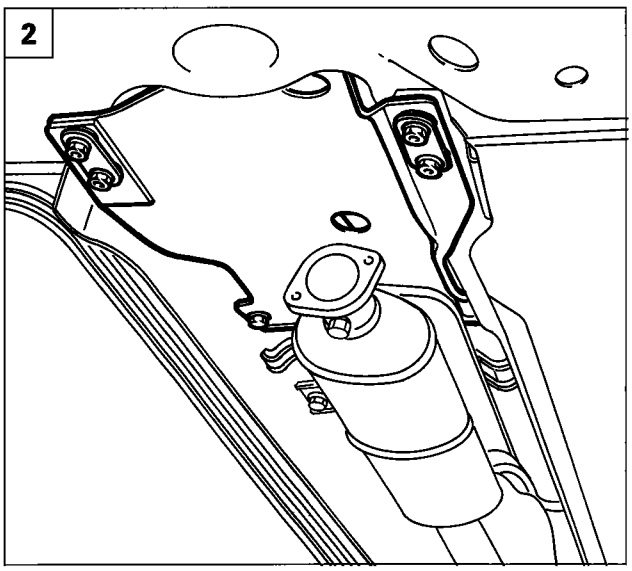

P4F10DX02

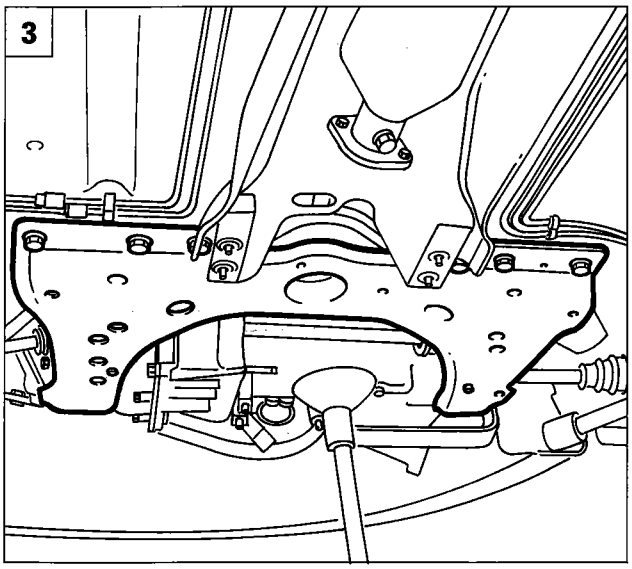

P4F10DX03

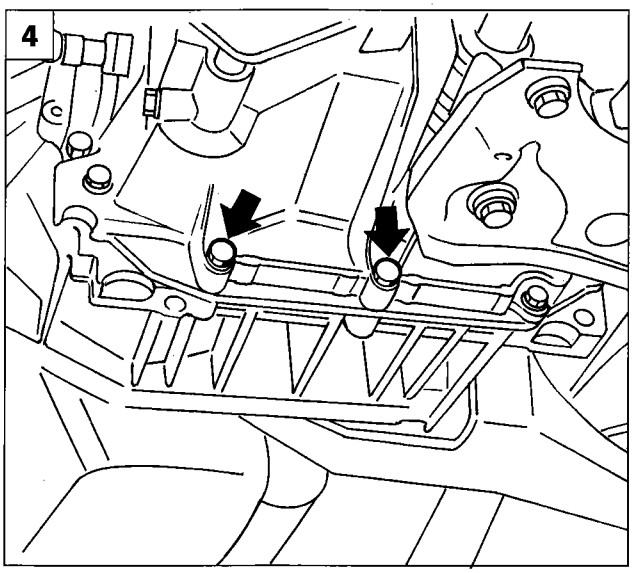

P4F10DX04

1. Undo the bolts fixing the track control arm (right side and left side) to the front cross member; suitably rotate the track control arm to release it from the front cross member.
2. Remove the fixings shown in the diagram for the heat shield in order to allow the subsequent extraction of the front cross member.
3. Undo the bolts fixing the front cross member to the bodyshell; remove the rear bolts first, then remove the side ones with the help of a second operator, then extract the complete anti-roll bar cross member.
4. Remove the bolts shown in the diagram from the bell housing, to allow the subsequent positioning of the power unit supporting tool.

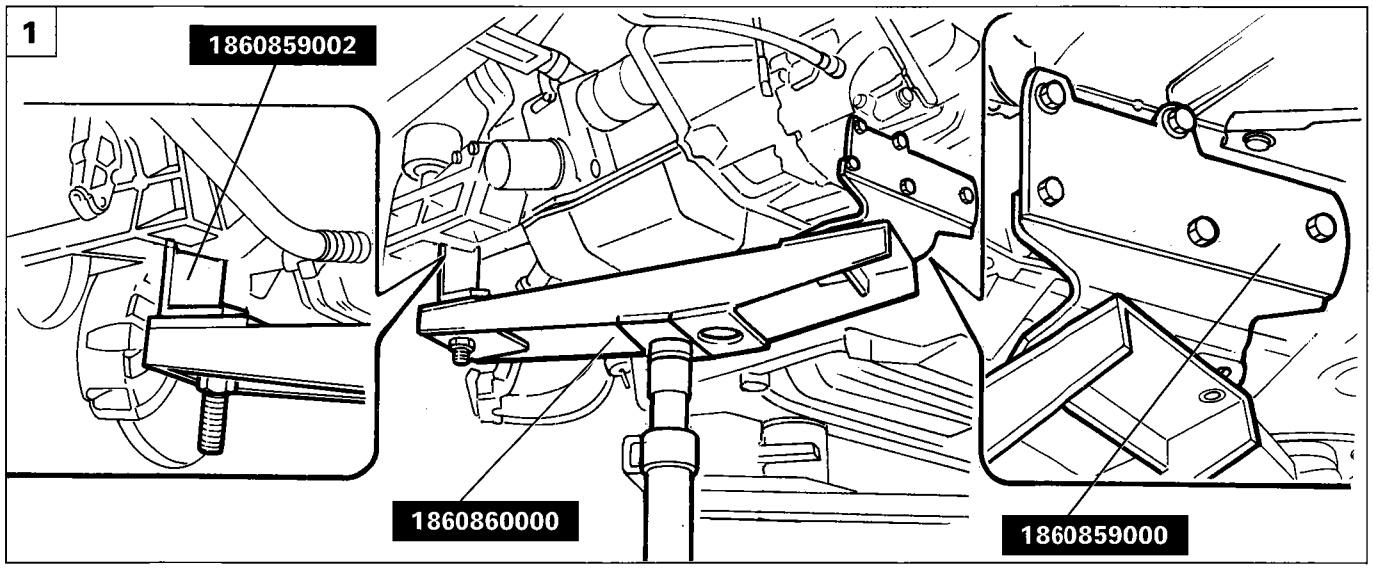

P4F11DX01

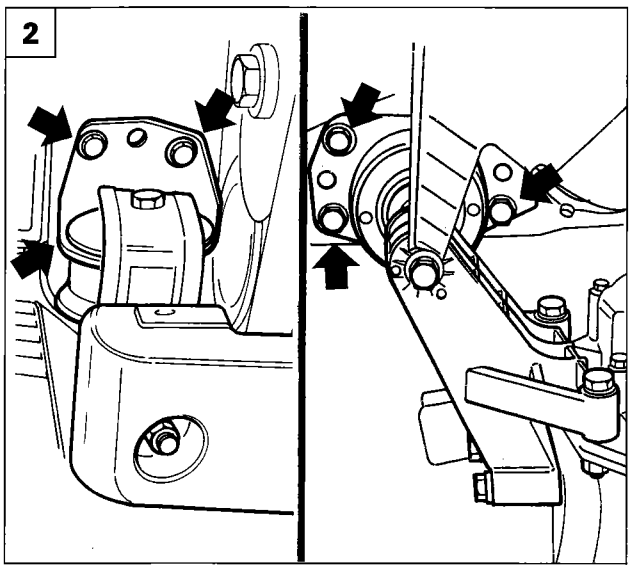

P4F11DX02

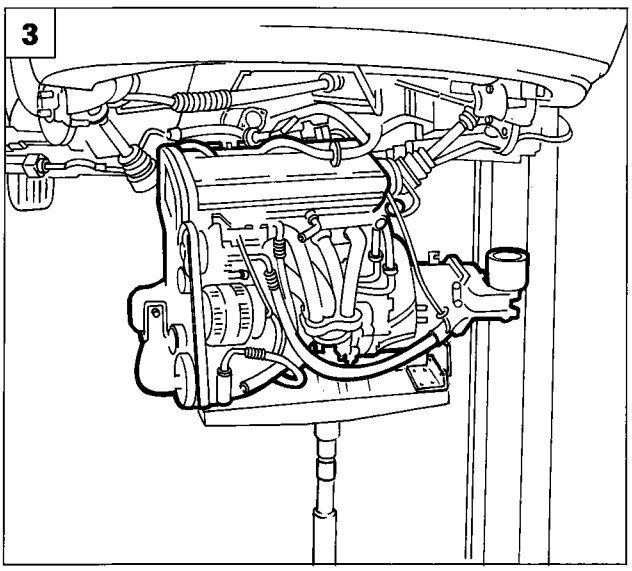

P4F11DX03

1. Position tool 1860860000 supporting the power unit on the hydraulic jack and fix it to the power unit at the points shown in the insets using tools 1860859000 and adaptor 1860859002.

The hydraulic jack should have a capacity of at least 1000 kg and a height suitable to allow the subsequent removal of the power unit downwards; it is necessary to bear in mind the maximum height which can be reached by the lift and the minimum height which can be reached by the hydraulic jack.

2. Remove the bolts fixing the side power unit supports to the bodyshell.
3. Lower the hydraulic jack and extract the power unit from the lower part of the vehicle.

Lower the hydraulic jack gradually and check that the power unit is correctly positioned and balanced on the supporting tool.

4. Place the power unit on a support using a hydraulic hoist.

Do not move the power unit when it is installed on the hydraulic jack. Use a hydraulic hoist fitted with tool 1860592000 to move the power unit after having released it first from the supporting tool.

Copyright by Fiat Auto

10.

NOTE *In order to refit the power unit simply reverse the order of the operations described for the removal.*

- *Prepare the engine compartment for the installation of the power unit, taking care to position all the electrical wires, pipes, etc. so that they do not create an obstruction for the fitting;*
- *Take care when fitting the power unit to avoid damaging the individual components;*
- *When refitting the engine coolant pipes, make sure that the notch in the flexible (rubber) pipe coincides with the projection on the rigid hose. To refill the engine cooling circuit, refer to the instructions in the chapter "Removing-refitting radiator".*

Firstly fix the engine side support, tightening the bolts fixing it to the bodyshell to the recommended torque, then fix the gearbox side support and lastlythe differential side centre support. Make sure that the power unit support points are correctly fixed. Tighten the bolts fixing the cross member, the track control arm and the rods connecting the anti-roll bar tothe track control arm to the recommended torque.

Check the front wheel geometry.

REMOVING-REFITTING TIMING DRIVE BELT

The timing belt cannot be removed-refitted on the vehicle because their is not sufficient space between the timing belt cover and the bodyshell to carry out the operation. This replacement should be carried out with the engine at the bench; refer to the description in the engine overhaul manual for this engine type.

REMOVING-REFITTING WATER PUMP

The water pump cannot be removed-refitted on the vehicle because there is not sufficient space between the pump and the bodyshell. It has to be replaced with the engine at the bench; refer to the description in the engine overhaul manual for this engine type.

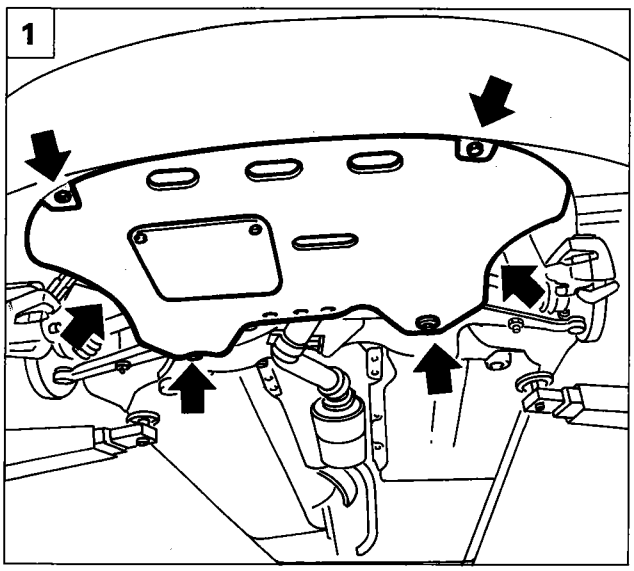

P4A04DX03

REMOVING-REFITTING RADIATOR

1. Remove the engine compartment lower shield.

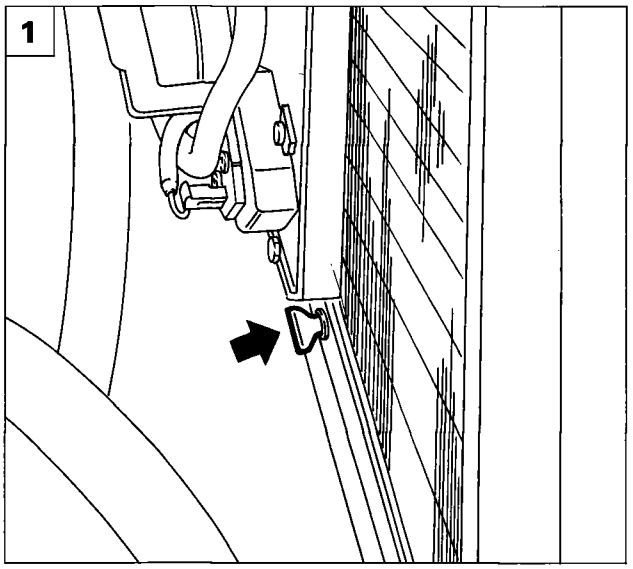

P4F13DX01

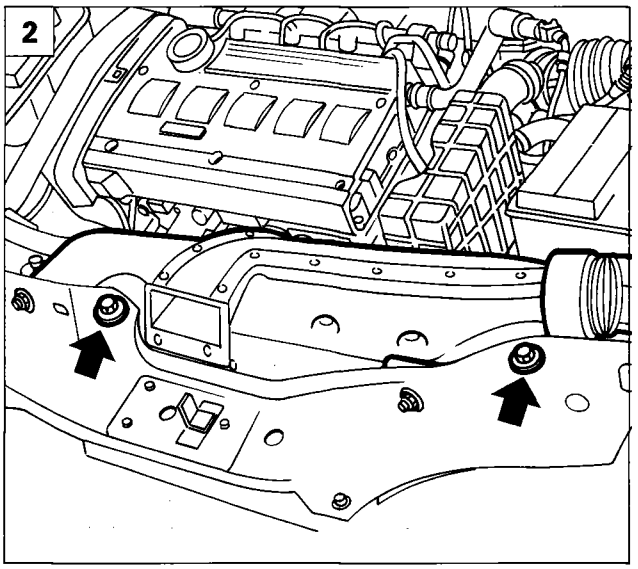

P4F13DX02

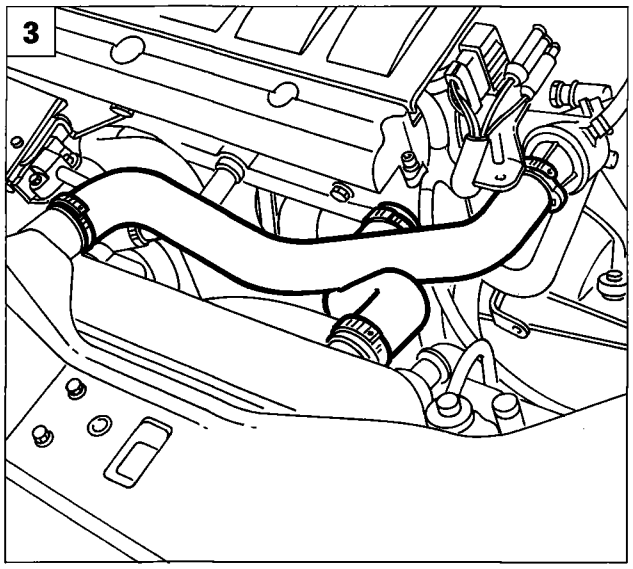

P4F13DX03

1. Drain the coolant acting on the special tap shown in the diagram.
2. Remove the air intake duct acting on the bolts fixing it to the front cross member shown in the diagram.
3. Disconnect the engine coolant inlet and outlet pipes from the radiator.
4. Disconnect the supply connections for the electric fan, undo the bolts fixing it to the radiator, then remove it from the vehicle.
5. Undo the upper bolts and loosen the lower ones, fixing the condenser to the radiator.

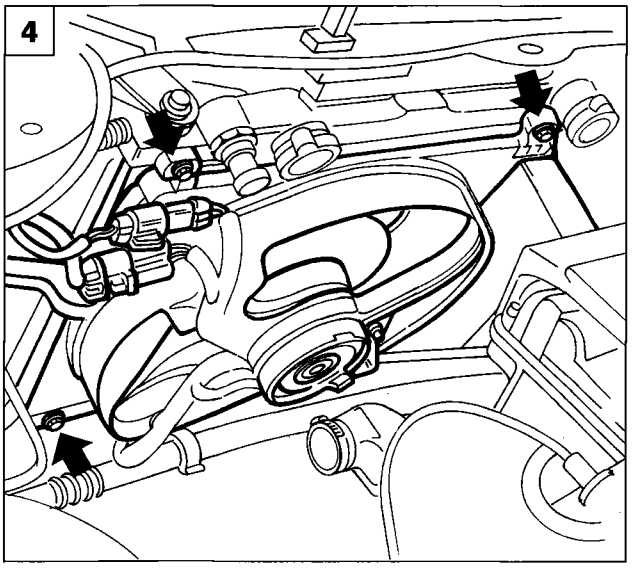

P4F13DX04

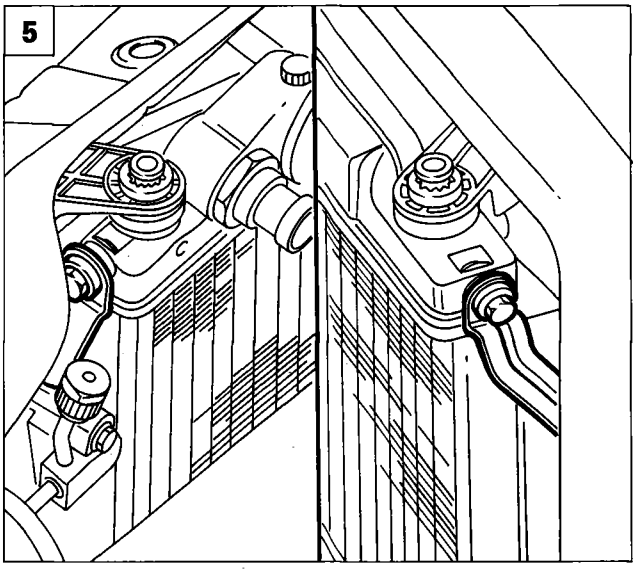

P4F13DX05

10.

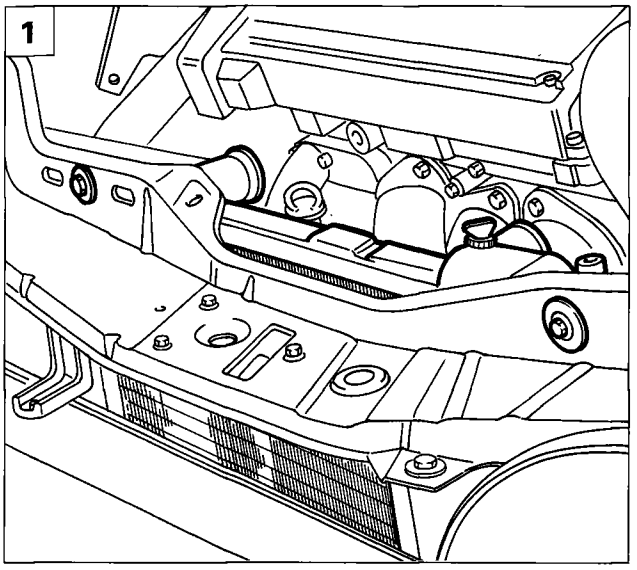

P4A24BX01

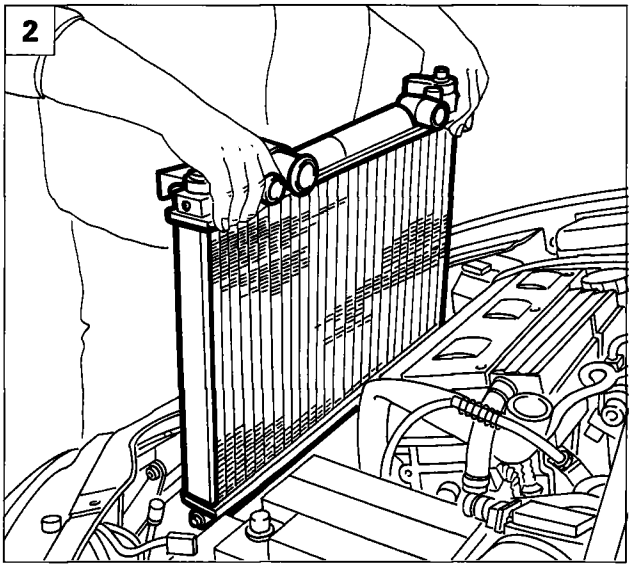

P4A24BX02

1. Remove the bolts fixing the radiator to the front cross member.
2. Move the radiator away from the condenser and suitably attach the latter, then extract the radiator from the engine compartment.

PROCEDURE FOR FILLING ENGINE COOLING CIRCUIT (version with heater)

1. Make sure that the cooling system components (engine, heater, radiator, etc.) are completely empty.
2. Open the bleed valve (A) on the radiator, the bleed valve (B) on the heater hose and the bleed valve (C) on the rigid coolant pipe.
3. Remove the rubber hose (D); blow through the hose with an air jet to completely empty the bleed pipe.
   Restore the connection when the operation is completed.
4. Fill the system slowly introducing coolant (a mixture of 50% water and paraflu), until fluid comes out of the bleed valve (A) on the radiator, then close the bleed valve. Continue filling until fluid comes out of the bleed valve (B) on the heater coolant inlet hose, then close this bleed valve as well. Complete the filling until fluid comes out of the bleed valve (C) on the rigid coolant inlet pipe and close the bleed valve.
   Continue filling until the MAX level is reached on the expansion tank.
5. Start up the engine and let it idle for 2 - 3 mins. Then carry out gradual, periodic accelerations (around every 30 seconds) until 4000 rpm is reached. This operation should be carried out until the radiator cooling fan comes on for the first time.
6. Top up, if necessary, until a midway point between the MIN and MAX levels on the expansion tank is reached.

NOTE *This last operation should be carried out after the engine has been allowed to cool down.*

If, during the operations described in point 4, the coolant boils, then the procedure should be halted to search for the defective component which should be replaced. The procedure should then be repeated.

Positioning the engine cooling circuit bleed valves (version with heater)

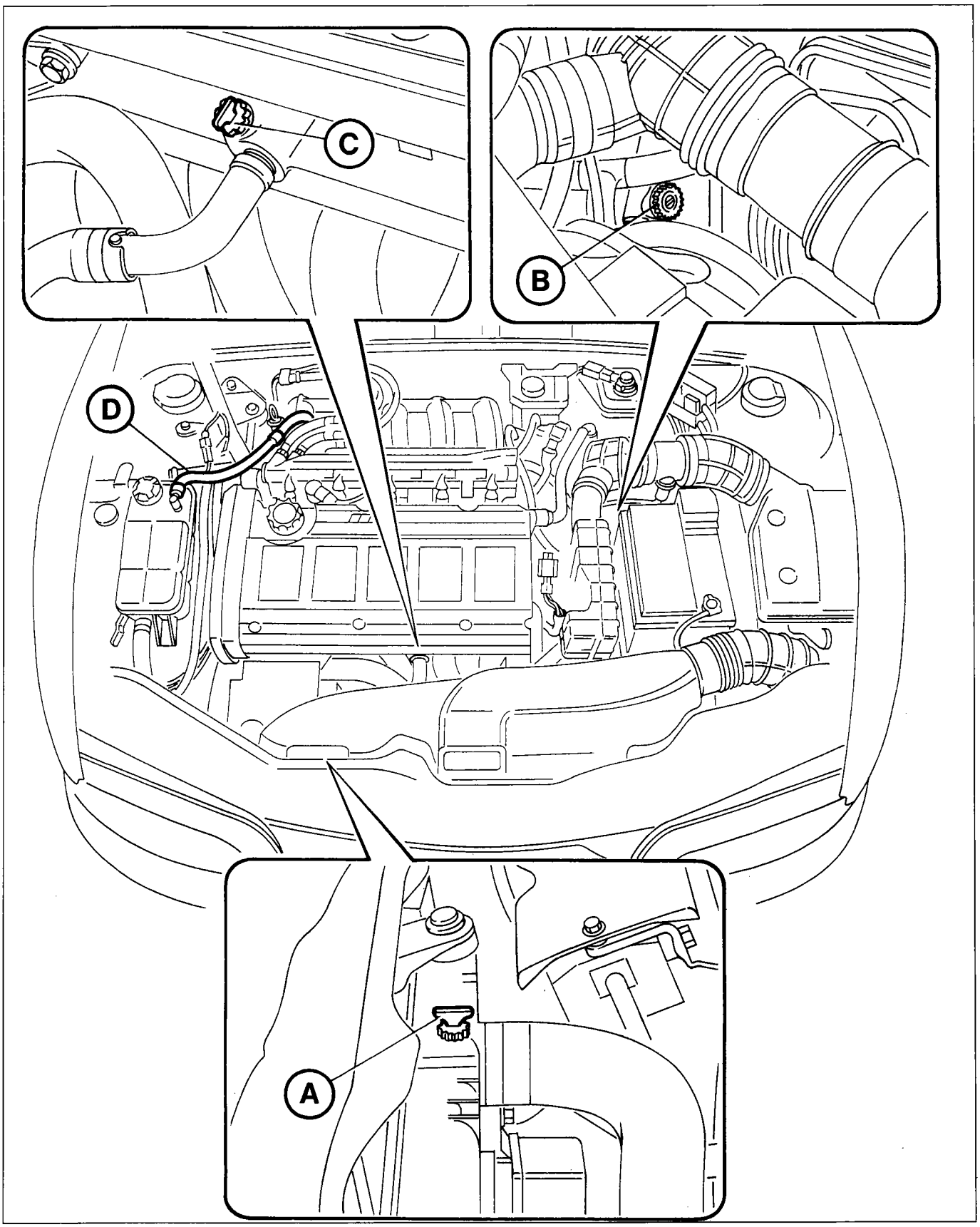

P4F15DX01

10.

PROCEDURE FOR FILLING ENGINE COOLING CIRCUIT (version with air conditioning)

1. Make sure that the cooling system components (engine, heater, radiator, etc.) are completely empty.
2. Open the two bleed valves (A and B) on the radiator, the bleed valve (C) on the heater hose and the bleed valve (D) on the rigid coolant inlet pipe.
3. Remove the rubber hose (E); blow through the hose with a compressed air jet to completely empty the bleed pipe.
   Restore the connection when the operation is completed.
4. Fill the system slowly introducing coolant (a mixture of 50% water and paraflu), until fluid comes out of the bleed valves (A and B) on the radiator, then close the bleed valves. Continue filling until fluid comes out of the bleed valve (C) on the heater coolant outlet hose, then close this bleed valve. Complete the filling until fluid comes out of the bleed valve (D) on the rigid coolant inlet pipe and close the bleed valve.
   Continue filling until the MAX level on the expansion tank is reached.
5. Start up the engine and let it idle for 2 - 3 mins. Then carry out gradual, periodic accelerations (aroudn every 30 seconds) until 4000 rpm is reached.
   This operation should be carried out until the radiator cooling fan comes on for the first time.
6. Top up, if necessary, until a midway point between the MIN and MAX levels on the expansion tank is reached.

NOTE *This last operation should be carried out after the engine has been allowed to cool down.*

⚠ *If, during the operations described in point 4, the coolant boils, then the procedure should be halted to search for the defective component which should be replaced. The procedure should then be repeated.*

Positioning engine cooling circuit bleed valves (version with air conditioning)

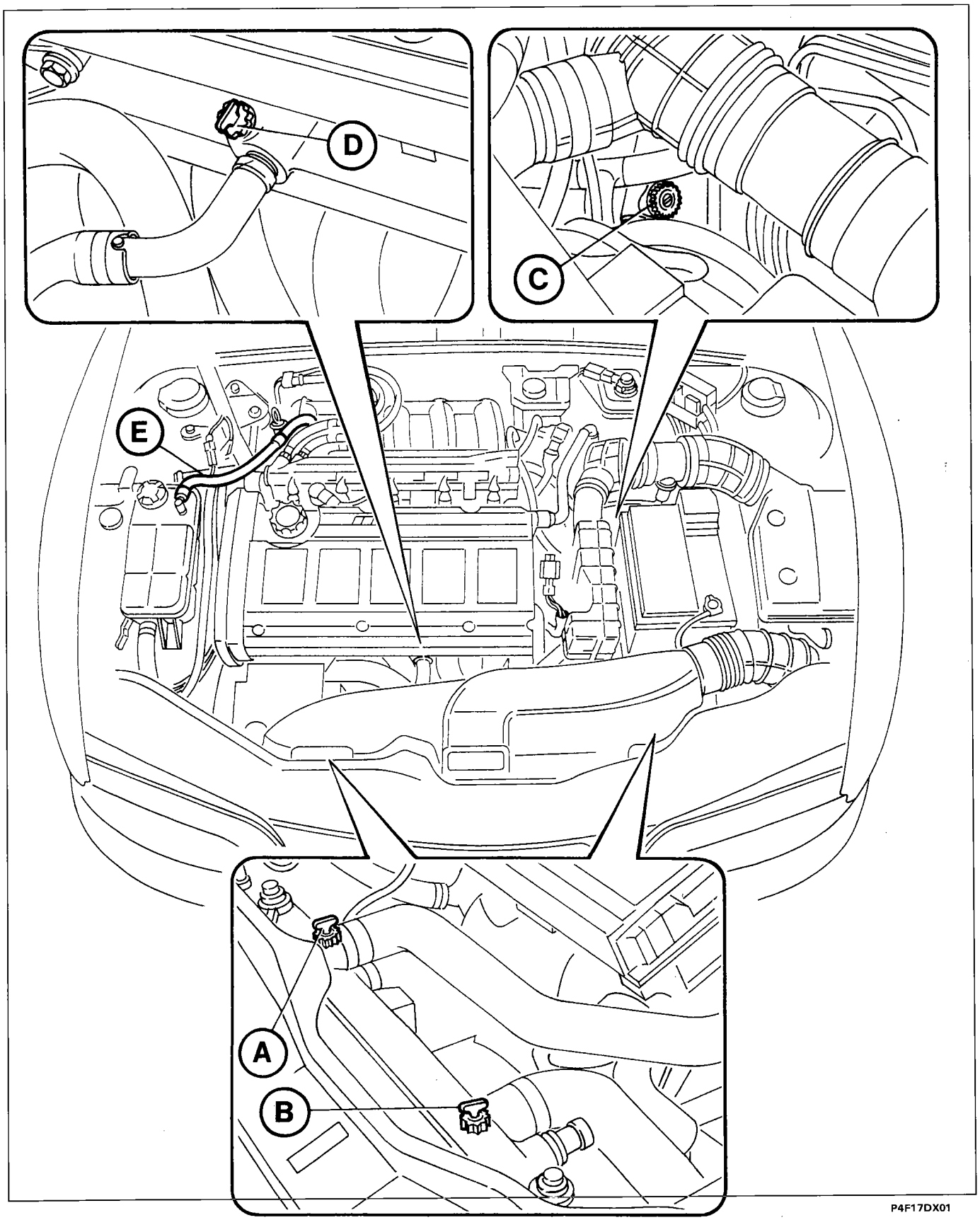

Copyright by Fiat Auto

page

REMOVING - REFITTING

- Removing - refitting power unit 1

REPLACING AUXILIARY COMPONENTS BELT

- Removing - refitting alternator and power steering pump drive belt 12

REPLACING TIMING BELT

- Removing timing belt 13
- Refitting and tensioning timing belt 15

REMOVING - REFITTING CYLINDER HEAD

- Removing cylinder head 18
- Refitting cylinder head gasket 24
- Refitting and tightening cylinder 25

REPLACING COOLANT PUMP

- Replacing coolant pump 26

REMOVING - REFITTING RADIATOR

- Removing - refitting radiator 27
- Procedure for filling engine cooling system (version with heating and air conditioning for engines from 75 and 100 bhp) 28

Copyright Fiat Auto

COPYRIGHT Fiat Auto S.p.A.

Total or partial reproduction of the text or illustrations is forbidden.

The information in this publication is intended as a guide and could be superseded as a result of modifications adopted by the Manufacturer at any time due to technical and commercial reasons and in accordance with local regulations.

Fiat Auto S.p.A.

D.M.C. - M.P.S.
Servizi Post Vendita - Assistenza Tecnica
10040 Volvera TO - (Italia) - Largo Senatore G. Agnelli, 5
Print no. 506.763/02 – Agosto 1996 - 750
Printed in Italy - Tip. Pozzo Gros Monti - Moncalieri (TO)
N. ordinazione 60444763

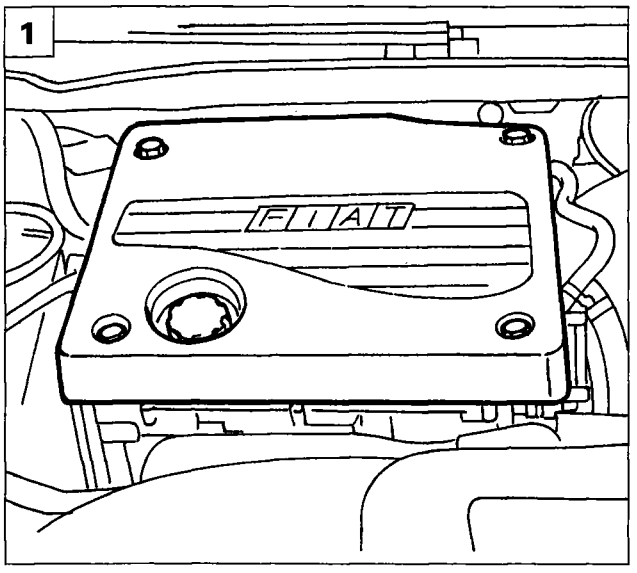

P4F01EX01

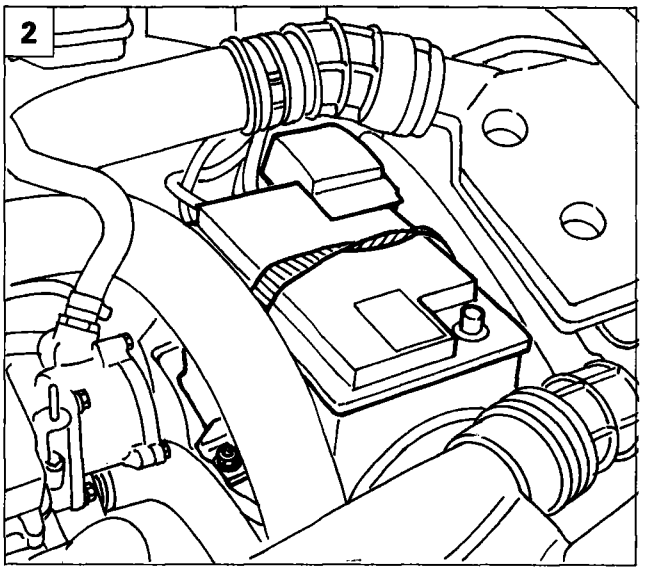

P4F01EX02

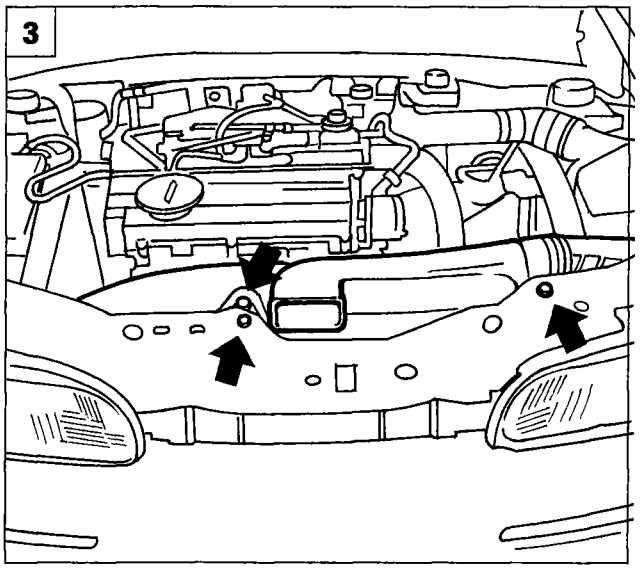

P4F01EX03

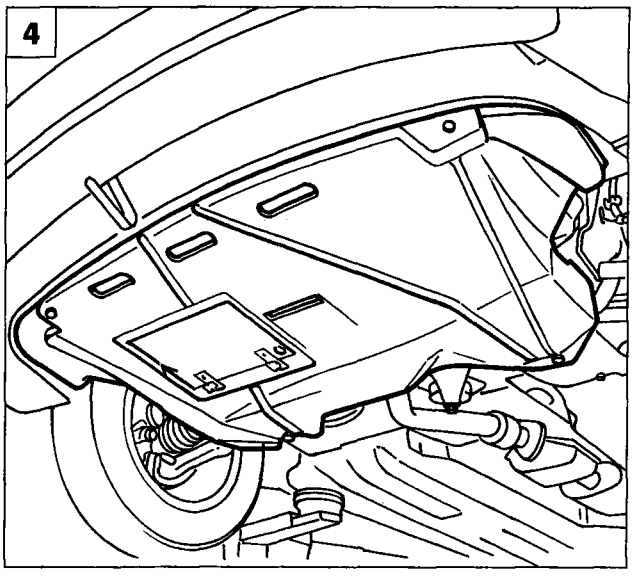

P4F003B01

REMOVING - REFITTING

Place the car on ramps, remove the front wheels and disconnect the battery's negative pole, then proceed as described below.

1. Remove the engine top guard.
2. Disconnect the battery's positive pole, undo the nut securing the battery to the battery cage, then remove the battery from the engine compartment.
3. Undo the bolts illustrated and remove the air duct illustrated.
4. Raise the ramps and remove the engine compartment bottom guard.

Copyright Fiat Auto

10.

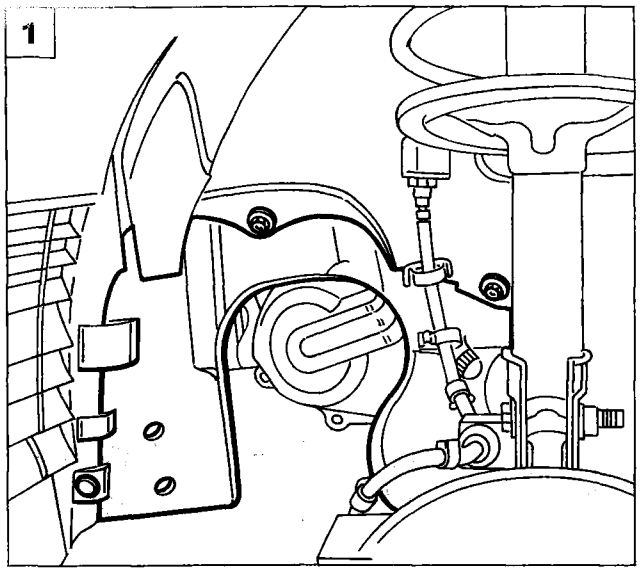

P4F02EX01

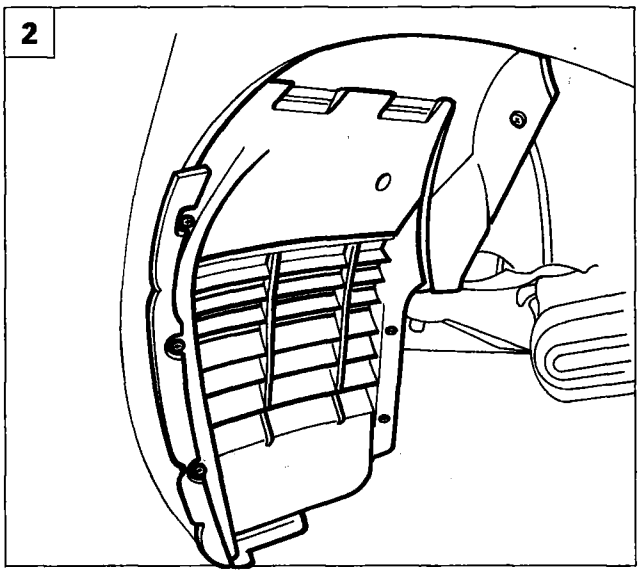

P4F02EX02

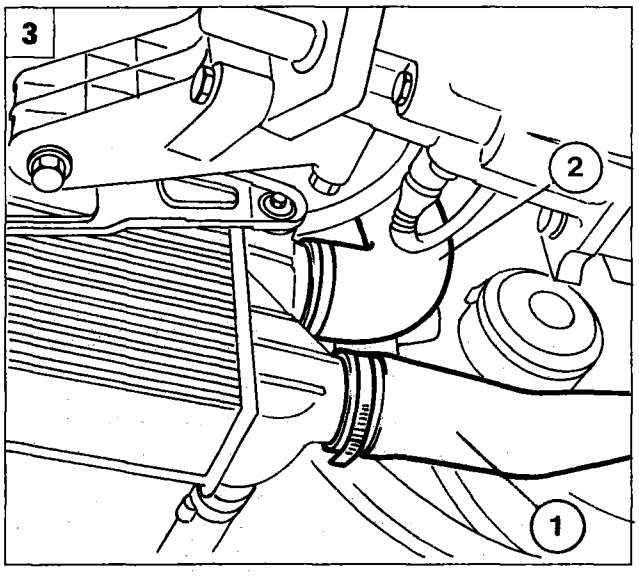

P4F02EX03

1. Using tool 1878077000 remove the button, undo the screws and disengage the dust shield from its seating.
2. Remove the wheelarch protection illustrated.
3. Disconnect the hose (1) between the turboblower and intercooler and the air outlet hose (2) from the intercooler to the inlet manifold.
4. Position the hydraulic jack for supporting the power unit, disconnect the engine/bodywork mounting, lower the engine and remove the intercooler complete with bracket. After completing this operation, refit the engine mounting.
5. Prepare a container to collect the engine coolant, then disconnect the coolant inlet hose from the radiator.

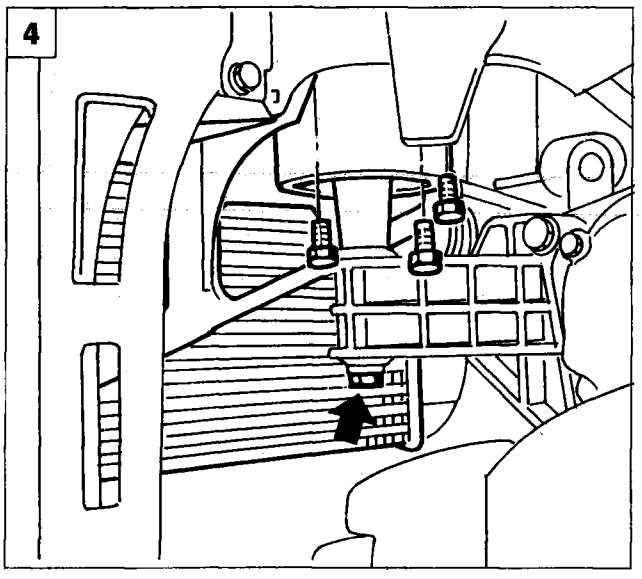

P4F02EX04

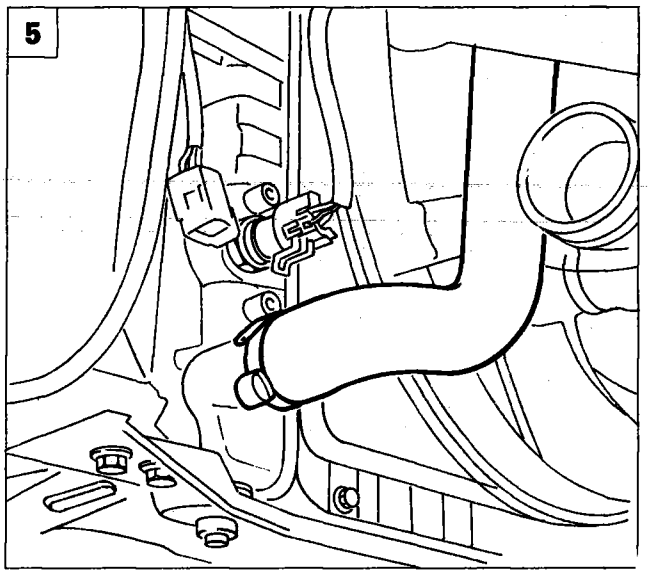

P4F02EX05

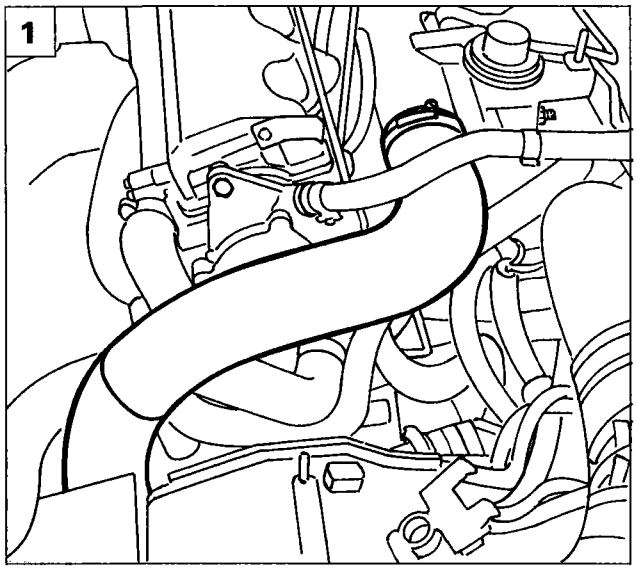

P4F03EX01

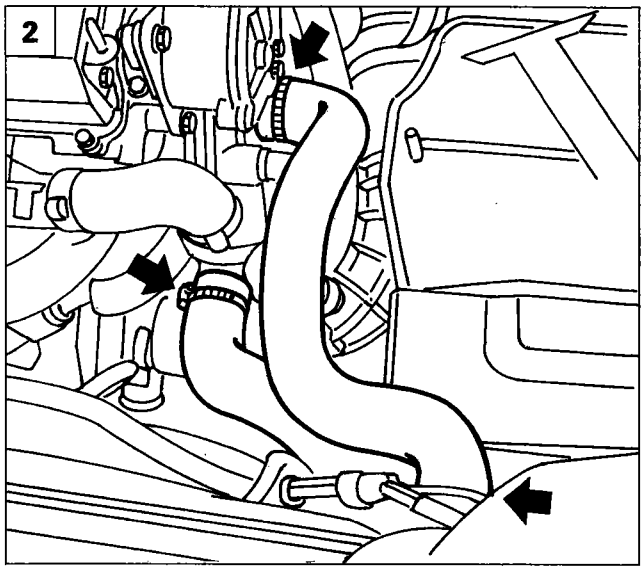

P4F03EX02

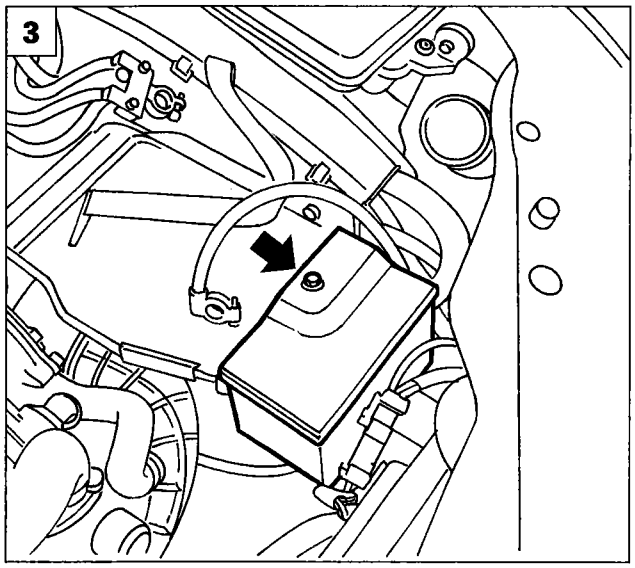

P4F03EX03

1. Remove pipe indicated, disconnecting it from the clip on the inlet manifold.
2. Remove the coolant inlet and outlet pipes from the points illustrated.
3. Undo the bolt illustrated on the relay box cover.
4. Undo the nuts illustrated and move the relay box over to one side in the engine compartment.
5. Undo the bolts (1), slacken the bolt (2), then remove the battery cage.

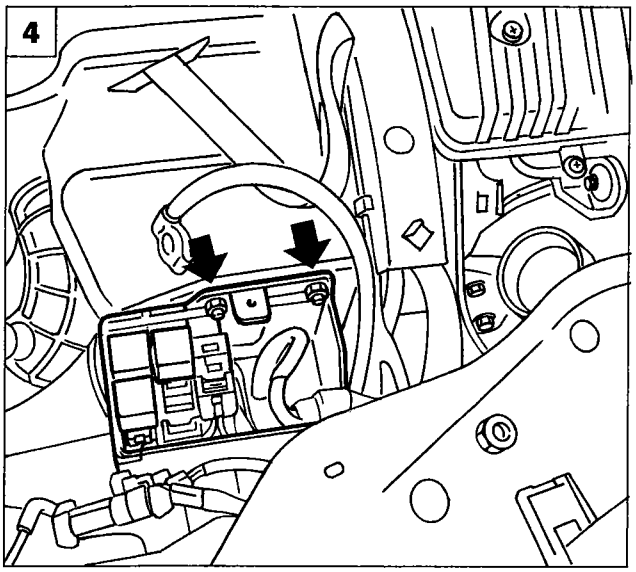

P4F03EX04

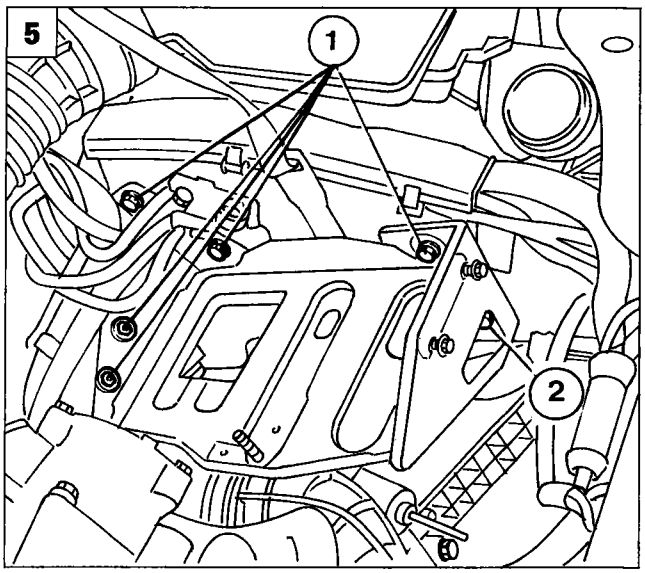

P4F03EX05

10.

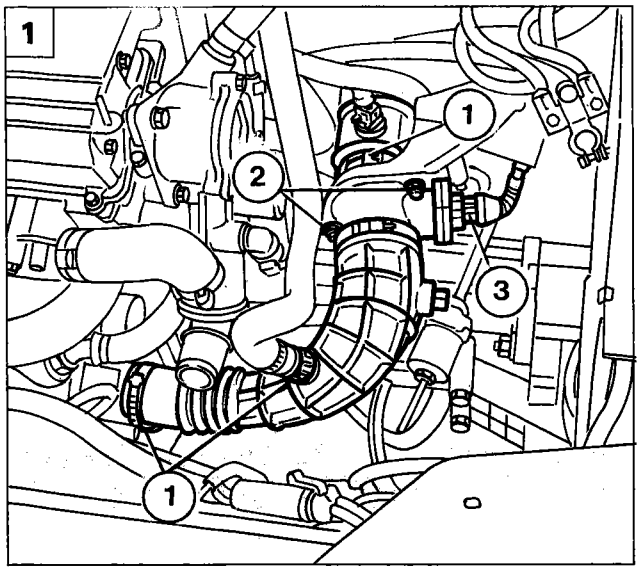

P4F04EX01

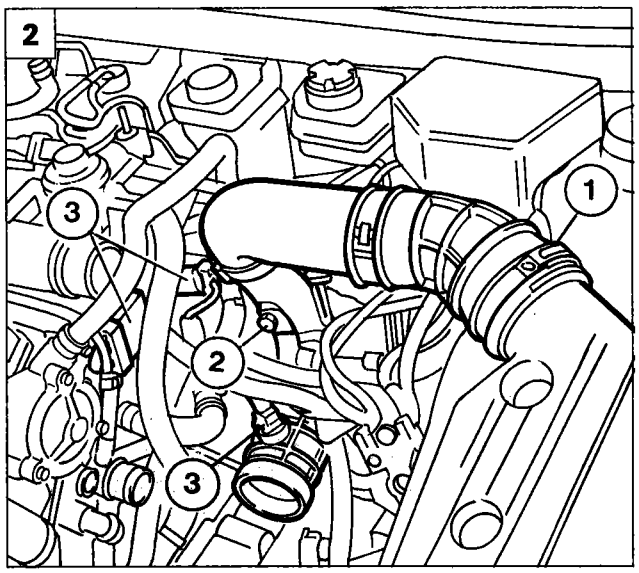

P4F04EX02

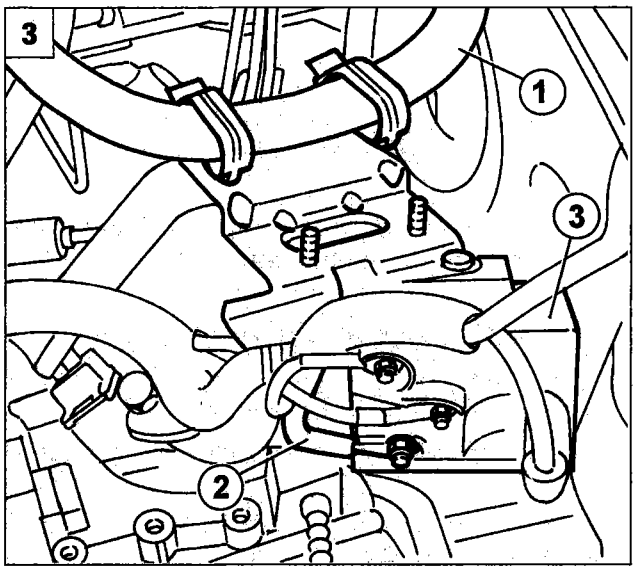

P4F04EX03

1. Undo the clips (1), undo the bolts (2), disconnect the connection (3), then remove the first section of the air inlet pipe complete with flowmeter.
2. Undo the clip (1), undo the bolt (2) disconnect the wiring connections (3), then remove the second section of the air inlet pipe.
3. Open the two clips and release the wire (1), disconnect the wire (2) then push aside the plug preheating control unit (3) with its bracket.
4. Disconnect from the thermostat the two pipes coming from the heater unit.
5. Disconnect the two fan supply electrical connections.

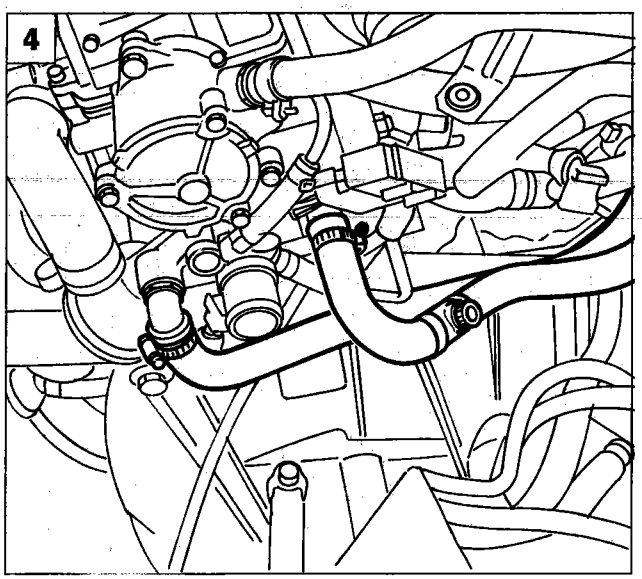

P4F04EX04

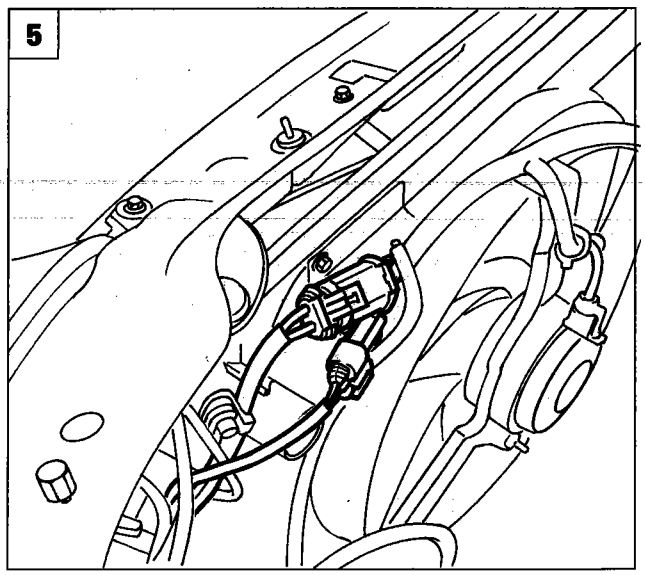

P4F04EX05

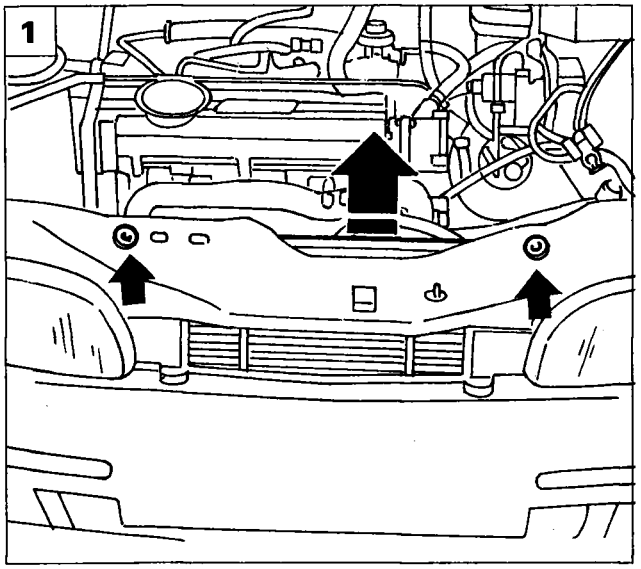

P4F05EX01

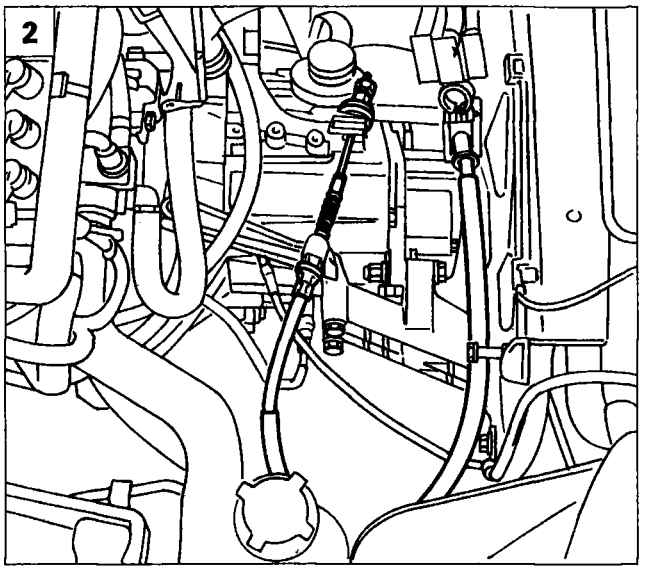

P4F05EX02

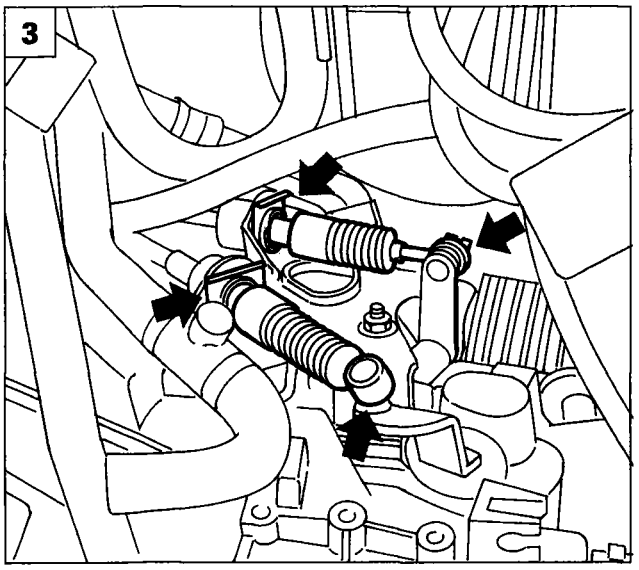

P4F05EX03

1. Undo the two bolts securing the radiator to the body shell, then remove the complete radiator - electric fan assembly.
2. Disconnect the clutch release control cable from the attachments on the gearbox.
3. Disconnect the gear selection and engagement transmissions from the gearbox at the points indicated, taking care not to damage the flexible transmissions when removing the heads.
4. Disconnect the two expansion tank pipes from the points illustrated.
5. Disconnect the fuel delivery and return pipes (1) and (2) and the fuel delivery pipe (3) from the diesel filter to the fuel injection pump.

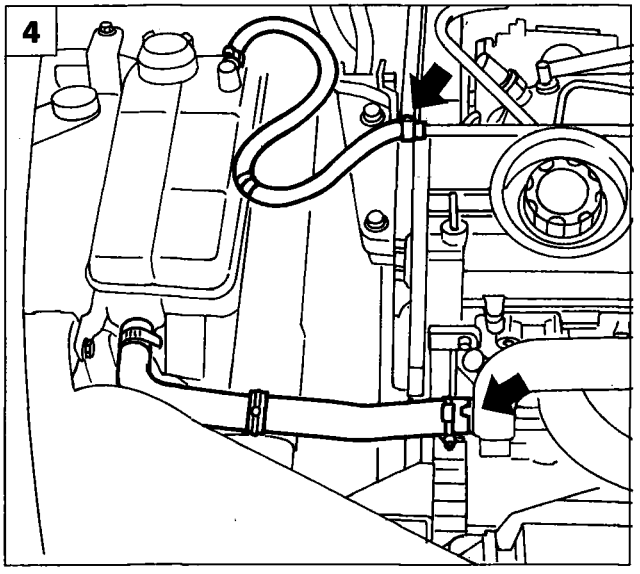

P4F05EX04

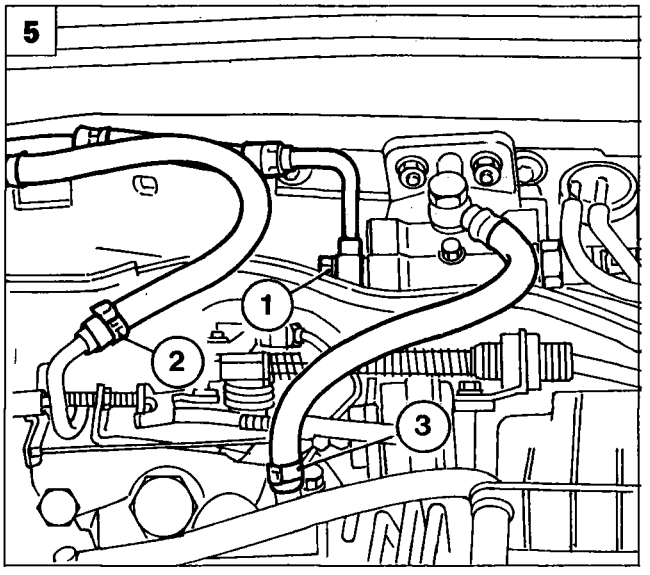

P4F05EX05

10.

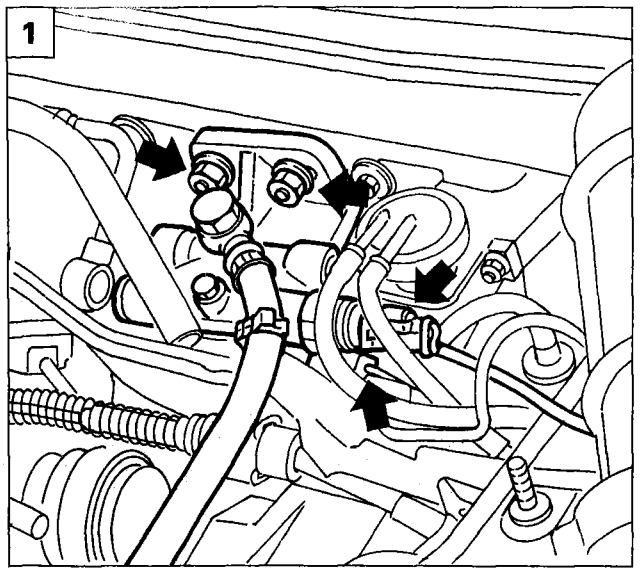

P4F06EX01

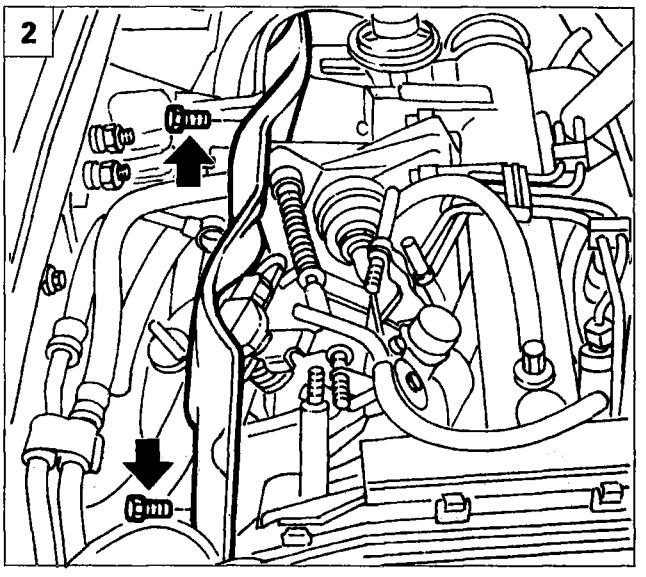

P4F06EX02

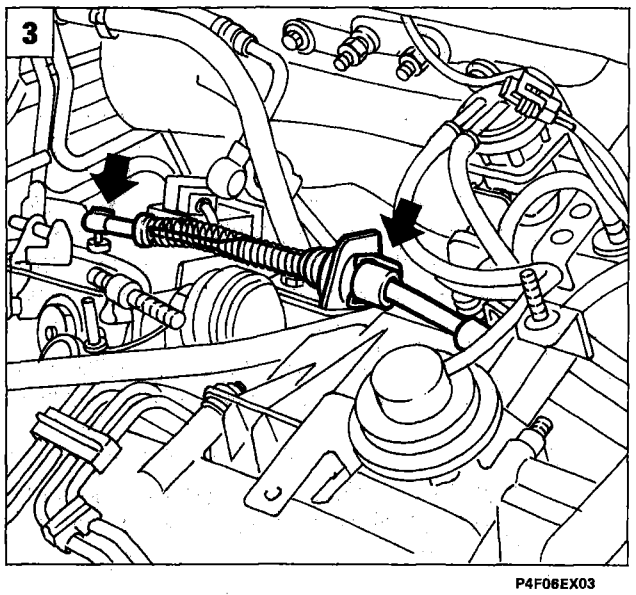

P4F06EX03

1. Undo the nuts, disconnect the two wiring connections illustrated, then remove the diesel filter.
2. Remove the rear sound-proofing shield by undoing the screws illustrated.
3. Disconnect the accelerator control cable from the points illustrated.
4. Disconnect the pipe from the modulating valve (1) and the pipe from the fast idle valve (2), disconnect the wiring connections illustrated and the brake servo vacuum hose (3) from the point illustrated.
5. Remove the reaction link complete with support, by undoing the attachment bolts illustrated.

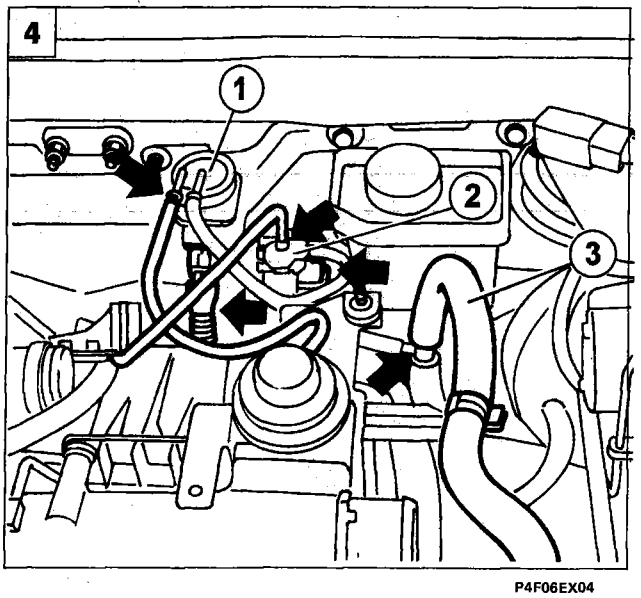

P4F06EX04

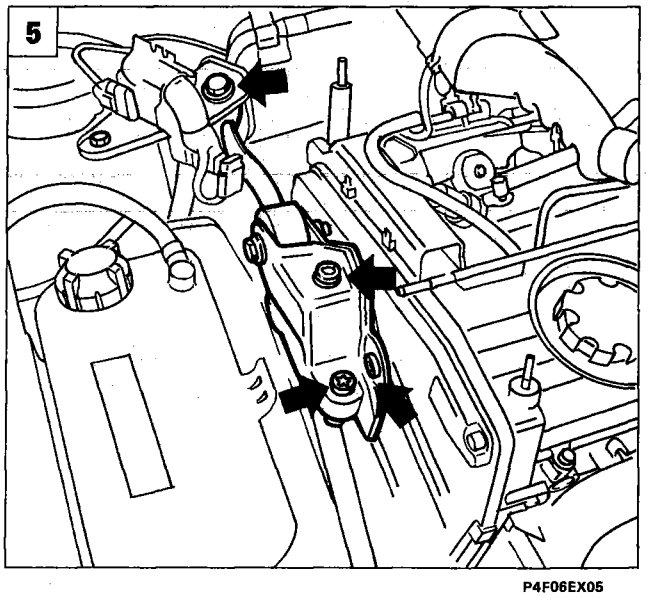

P4F06EX05

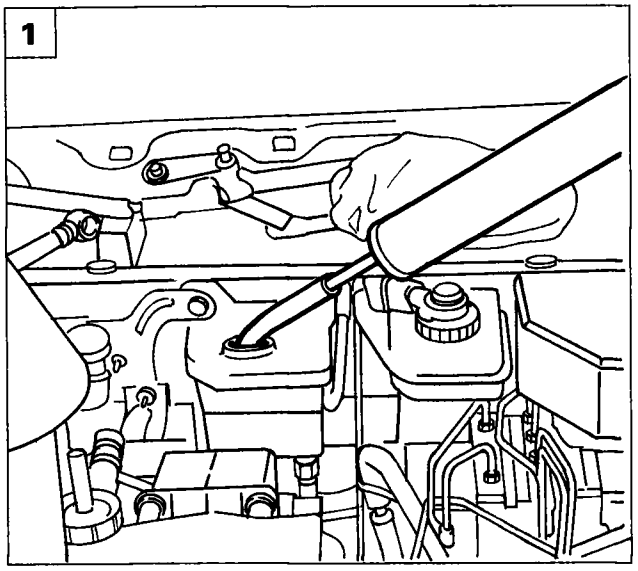

P4F04FX03

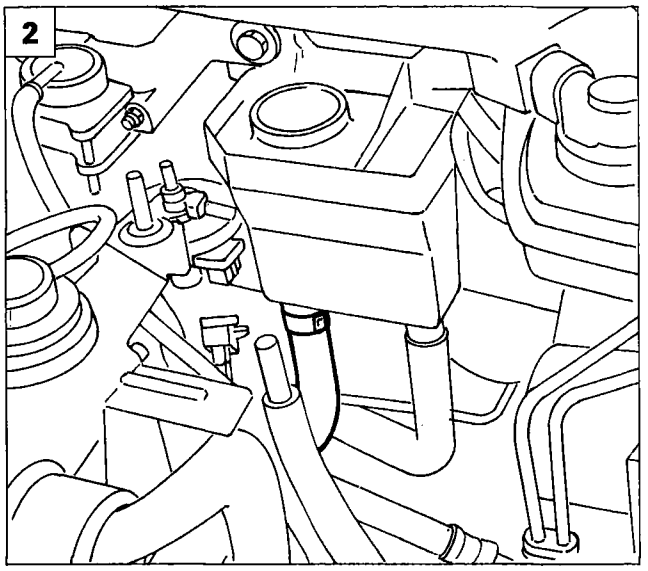

P4F07EX02

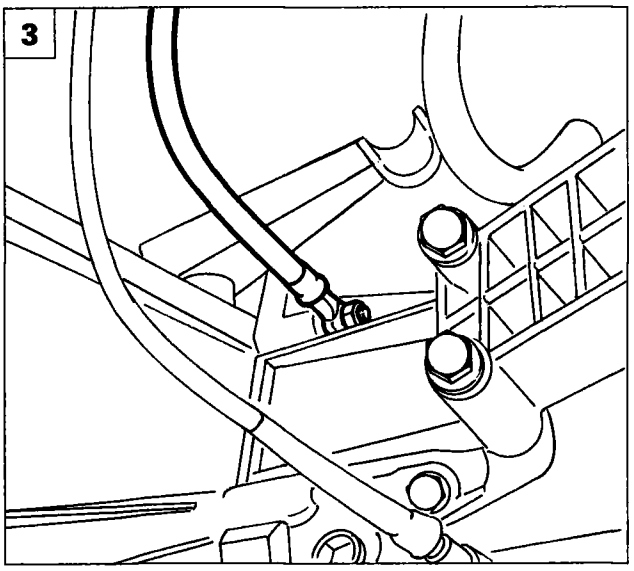

P4F07EX03

1. Drain the fluid from the power steering pump using suitable equipment to collect the fluid.
2. Disconnect from the reservoir the fluid delivery pipe to the power steering pump.
3. Disconnect the earth cable from the gearbox.
4. Remove the exhaust pipe front section from the manifold and the two anti-vibration brackets.
5. Disconnect the exhaust pipe front section from the catalytic converter, then remove it from the car.

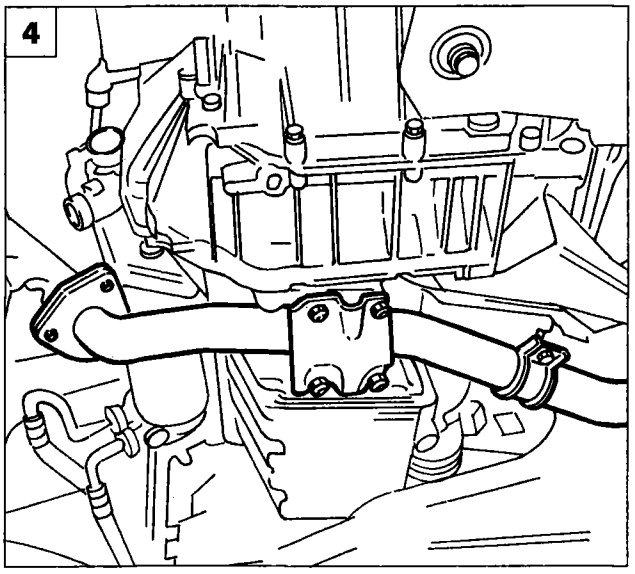

P4F07EX04

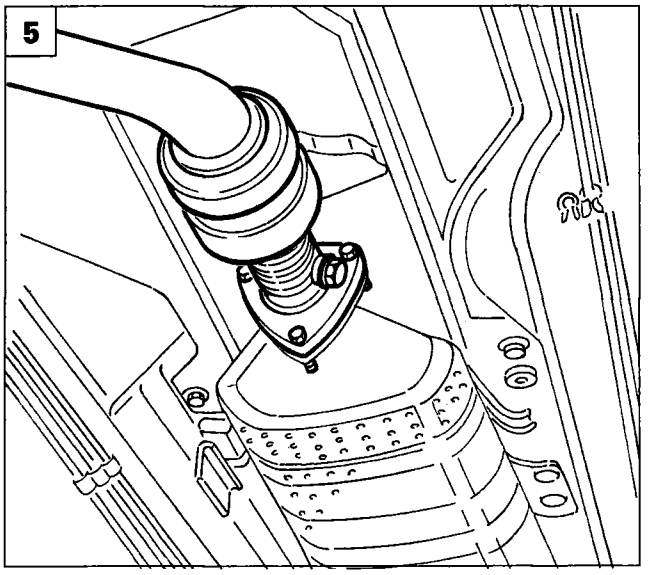

P4F004B04

Copyright Fiat Auto

10.

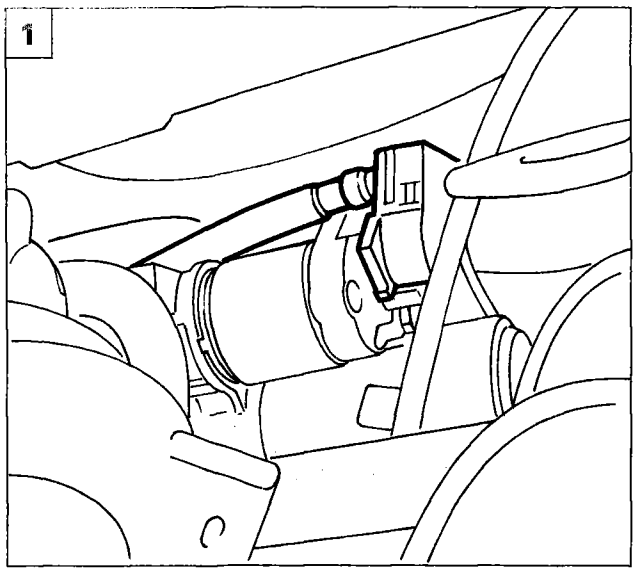

P4F08EX01

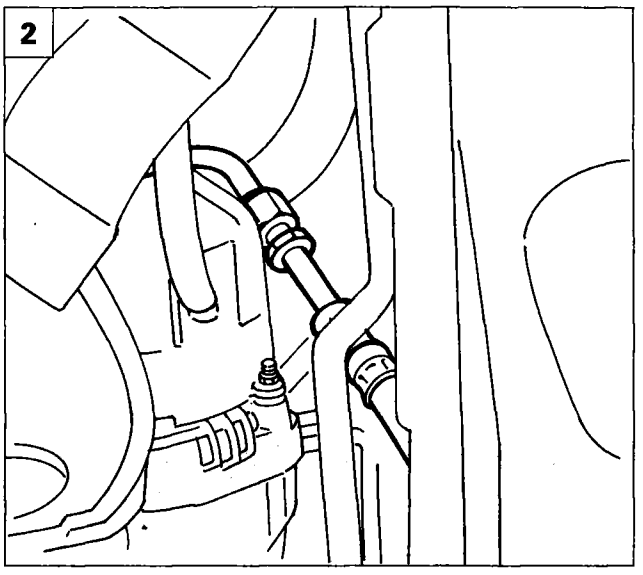

P4F08EX02

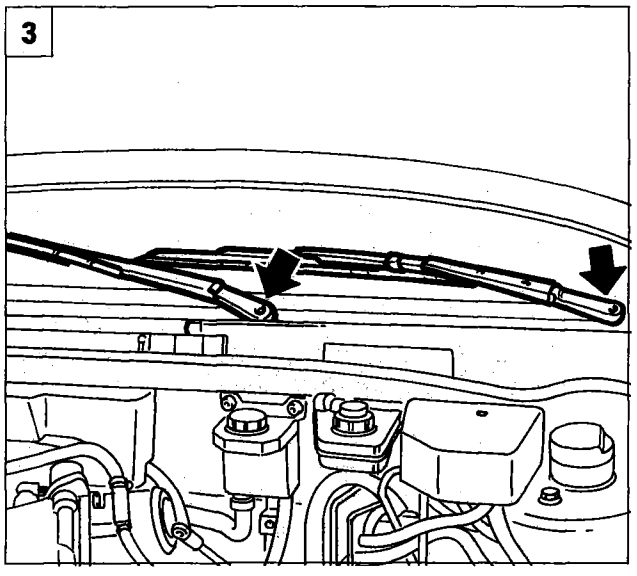

P4F54AB02

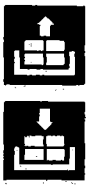

1. Disconnect the starter motor supply cable.
2. Disconnect the return connection from the power steering pump.
3. Remove the windscreen wiper arms by taking off the plastic protection and undoing the nut underneath.
4. Remove the plastic protection on the anti-pollen filter.
5. Undo the nuts securing the engine wiring bracket to the body shell.

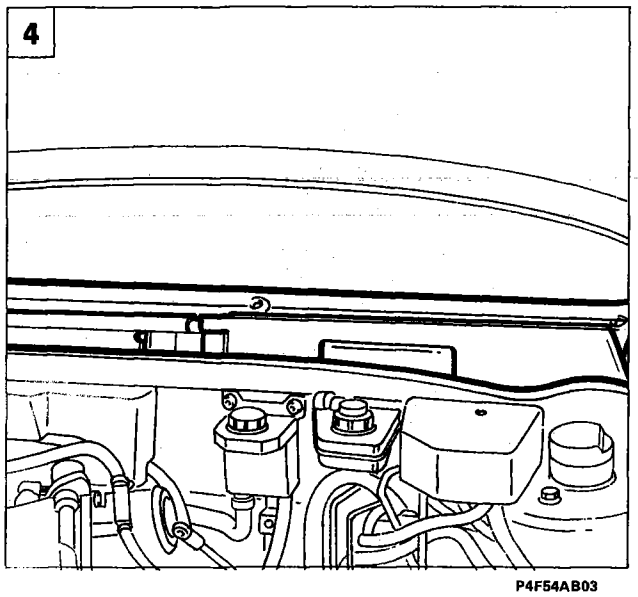

P4F54AB03

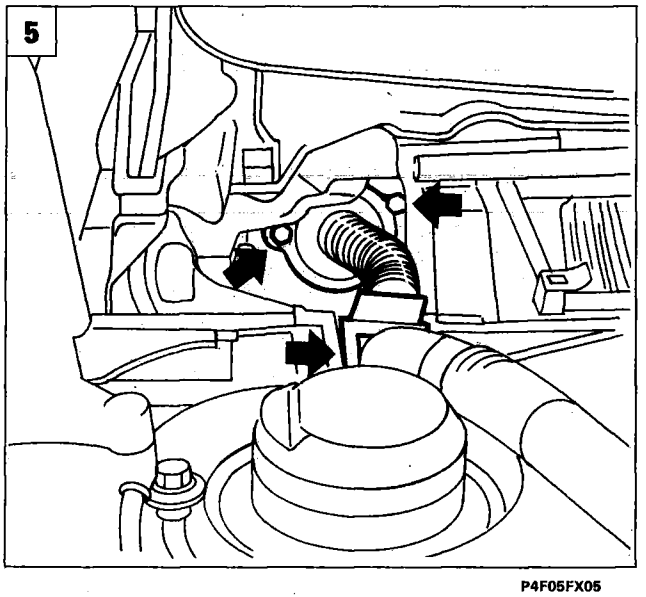

P4F05FX05

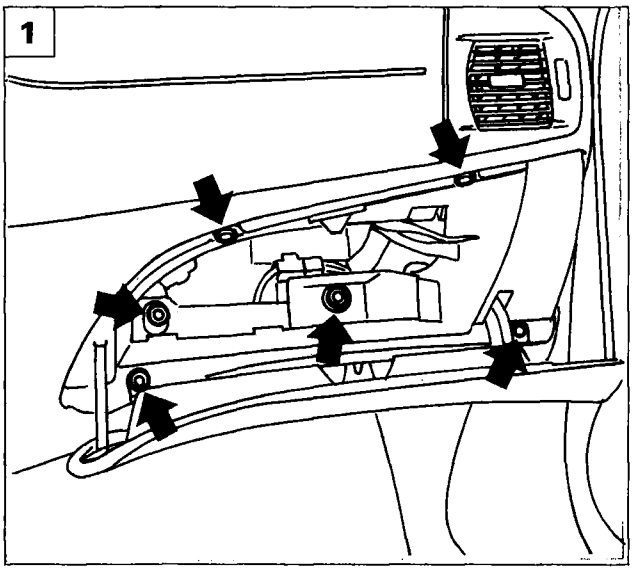

P4F05FX03

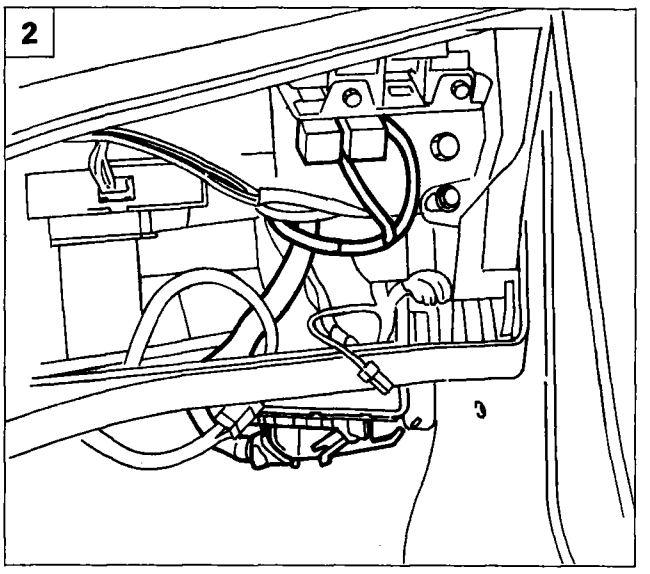

P4F05FX04

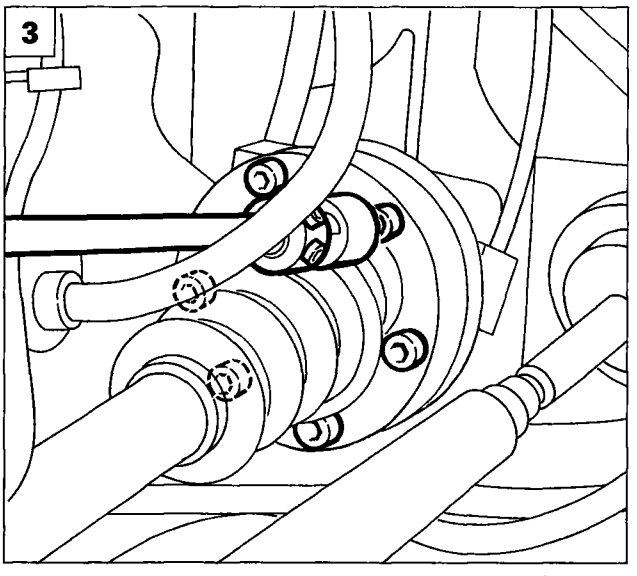

P4F039B01

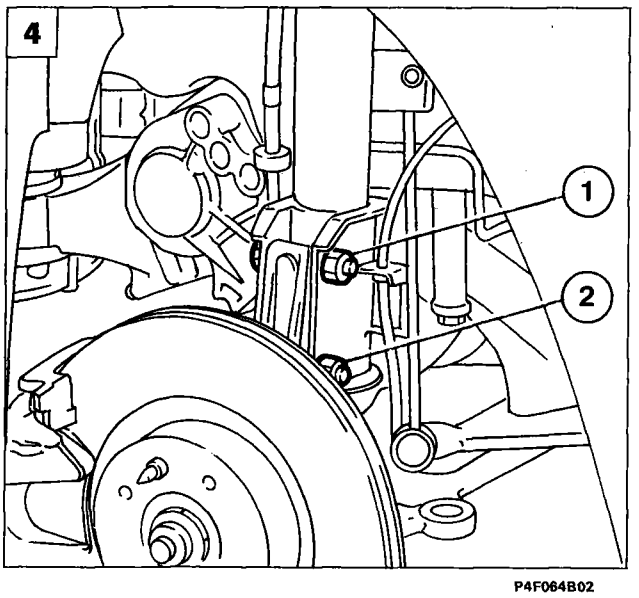

P4F064B02

1. Working from inside the car, remove the glovebox by undoing the screws illustrated.
2. Disconnect the connector from the i.e. control unit and withdraw the relay illustrated from its bracket, then withdraw the complete engine wiring, securing it to the engine unit.
3. Disconnect the drive shafts by undoing the bolts securing the constant velocity joint to the gearbox flange.
4. Undo the bolt (1) and slacken the bolt (2) securing the suspension vertical link, then rotate the vertical link outwards, releasing the drive shaft from its seating on the differential.

10.

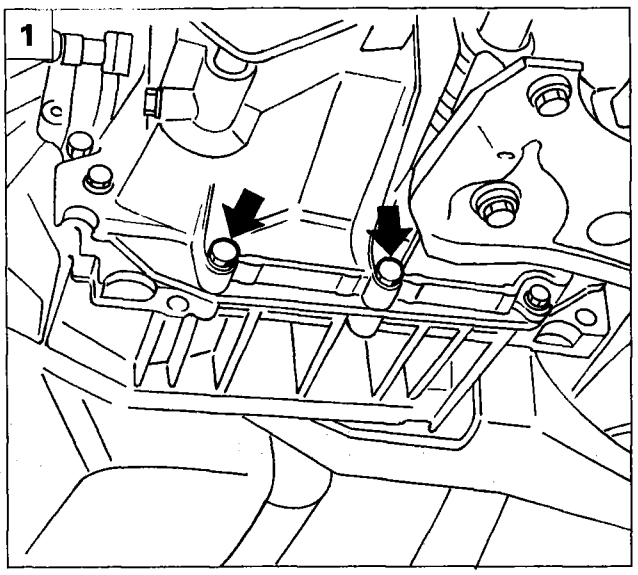

P4F06BX05

1. Remove the bolts indicated from the gearbox bellhousing in order to be able to fit the tool for removing the engine.

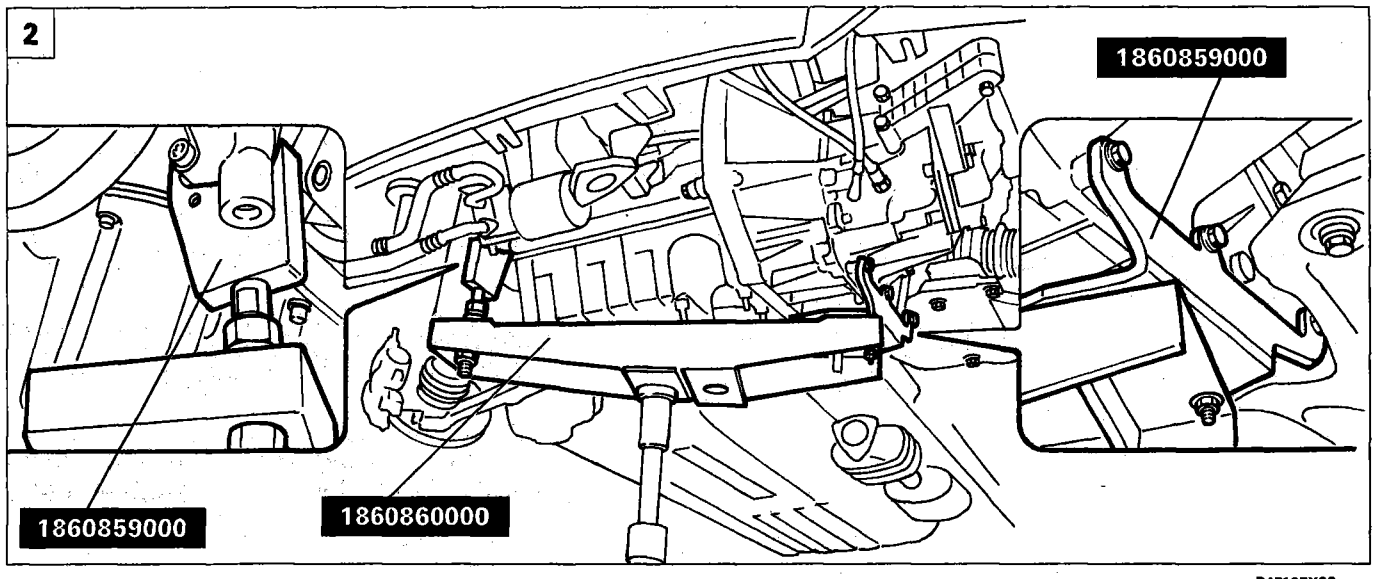

P4F10EX02

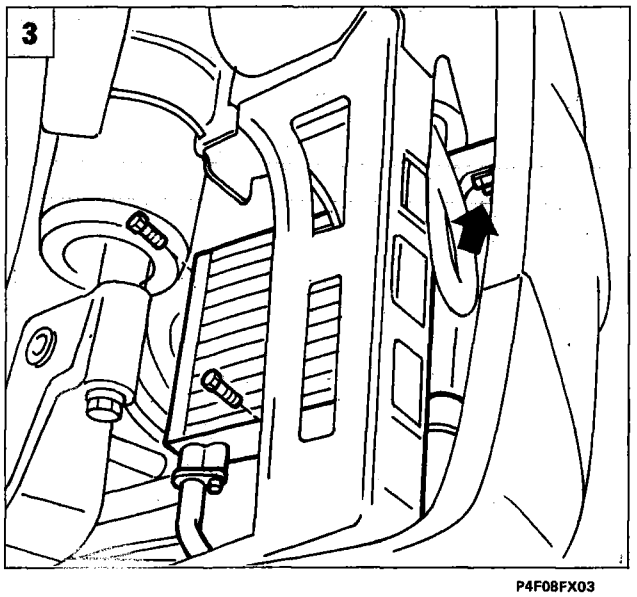

P4F08FX03

2. Fit the engine support tool 1860860000 on the hydraulic jack and secure it to the engine using the tools illustrated.

The hydraulic jack must have a capacity of at least 1000 kg must be sufficiently high to allow the engine to be withdrawn downwards; in this respect, it is necessary to take into consideration the maximum height that can be reached by the ramps and the minimum height that can be reached by the hydraulic jack.

3. Remove the engine oil heat exchanger from the attachments illustrated, then secure it to the engine.

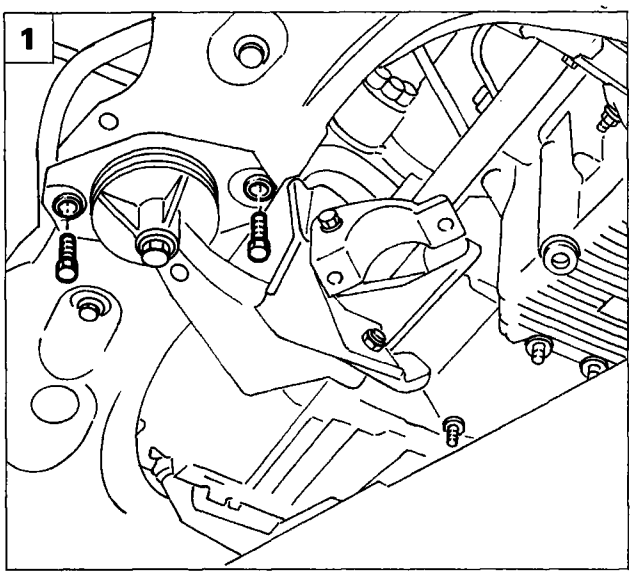

P4F11EX01

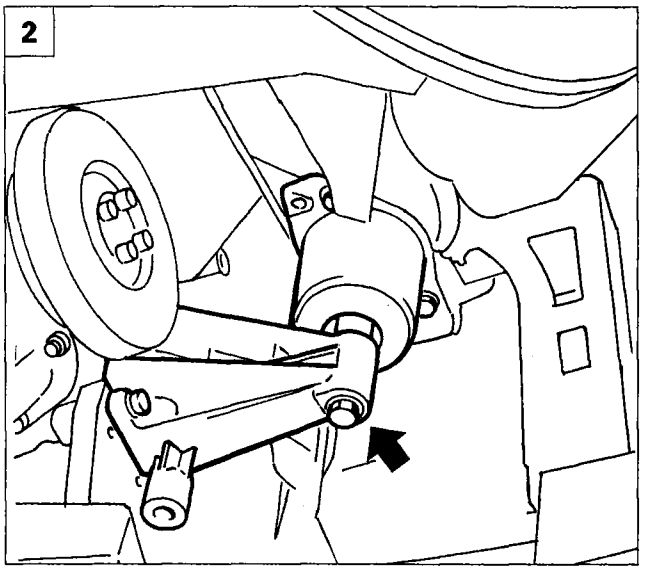

P4F11EX02

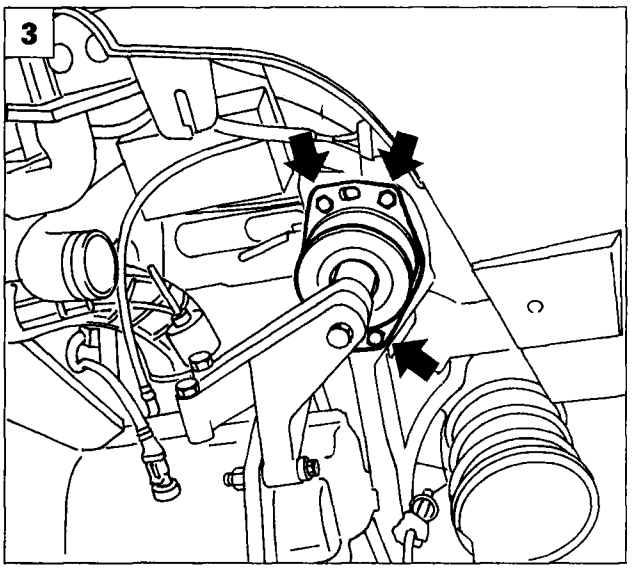

P4F11EX03

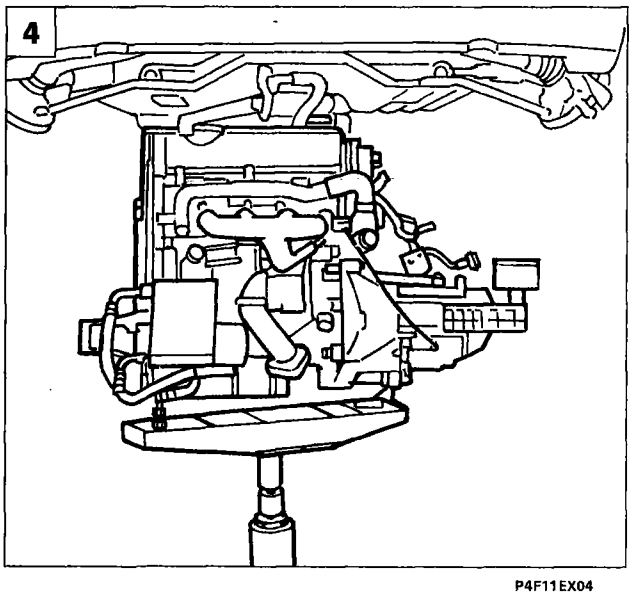

P4F11EX04

1. Remove the central engine mounting by undoing the bolts securing it to the body shell.
2. Remove the enging mounting on the timing gear side by undoing the central bolt.
3. Remove the engine mounting on the gearbox side by undoing the attachment bolts indicated.
4. Lower the hydraulic jack and withdraw the engine from under the car.

Lower the hydraulic jack gradually and check that the engine is correctly positioned and balanced on its supporting tool.

- Place the engine on a platform using a hydraulic hoist.

To move the engine unit, use a hydraulic hoist after first releasing it from its support tool.

NOTE *To refit the engine, simply reverse the procedure described for removal.*

- *Prepare the engine compartment for fitting the engine, making sure to fit all the electric cables, pipes, etc. in such a way as not to create an obstruction to assembly;*

- *When fitting the engine, take the necessary care to avoid damaging the individual components;*
- *When refitting the engine coolant pipes, line up the recess on the rubber hose with the lug on the rigid pipe it connects to. To fill the engine cooling system, refer to the sub-section "Removing-refitting radiator" in this Section.*

Make sure that the engine unit support points have been secured correctly.

Clutch pedal height.

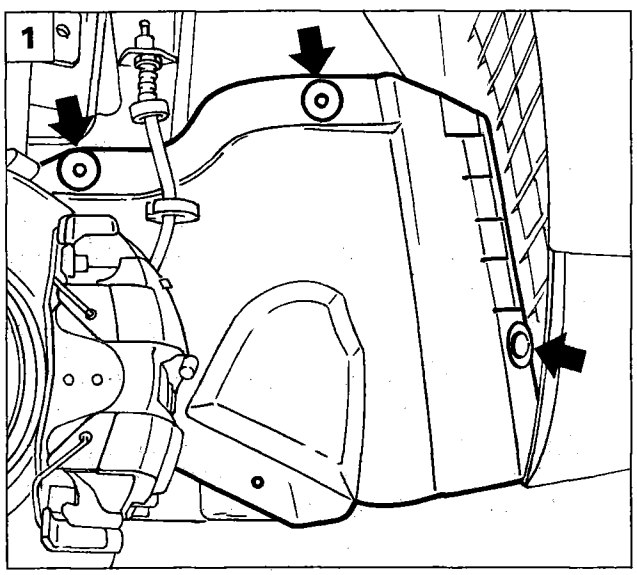

P4F12EX01

REMOVING - REFITTING ALTERNATOR AND POWER STEERING PUMP DRIVE BELT

Removing

Place the car on ramps, remove the front right wheel, disconnect the battery's negative pole, then proceed as illustrated below.

1. Remove the wheelarch guard by undoing the screws illustrated, and using tool 1870077000 remove the button illustrated.

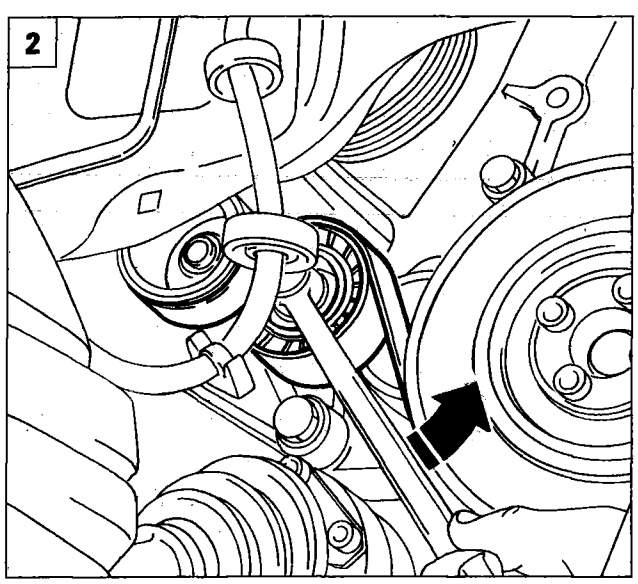

P4F12EX02

2. Rotate the tensioning device in the direction indicated by the arrow, release the belt tension, then remove the belt.

Check the condition of the belt, and in particular that there are no cracks, cuts or surface wear on the material (when worn it is smooth and shiny), or dry or hardened parts resulting in loss of grip. If even only one of the above defects is present, replace the belt.

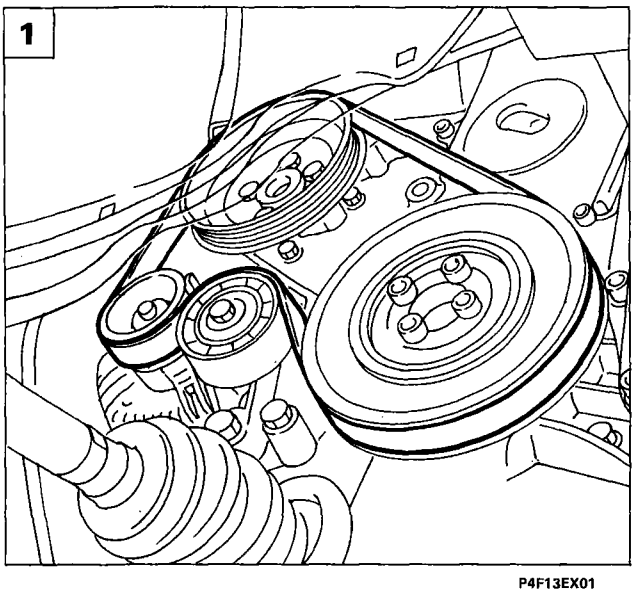

P4F13EX01

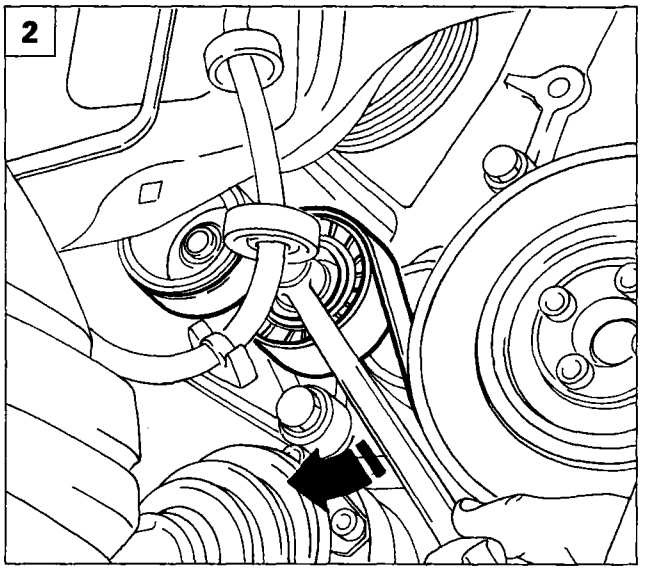

P4F13EX02

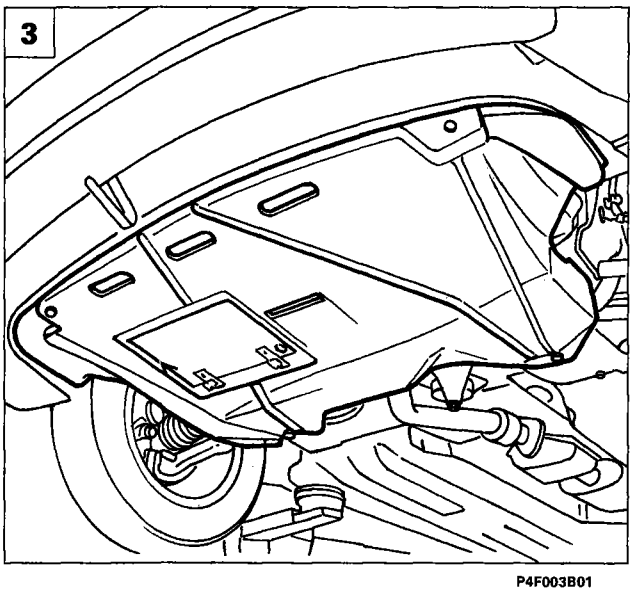

P4F003B01

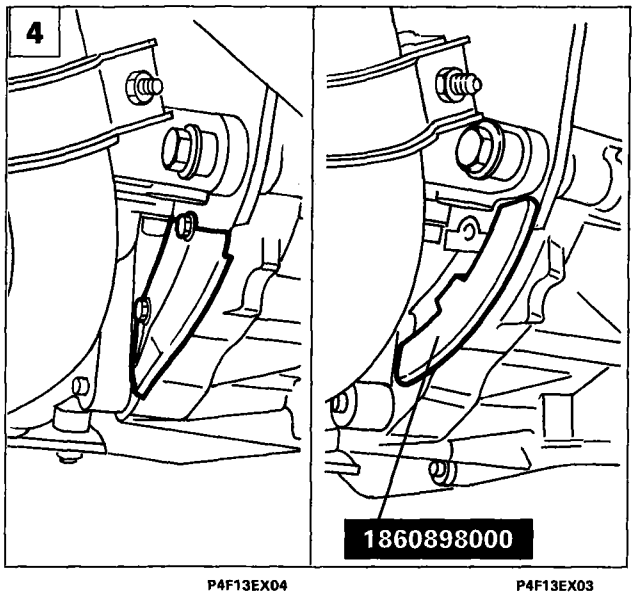

P4F13EX04 P4F13EX03

Refitting

1. Fit the new belt as illustrated in the figure.

Avoid the new belt coming into contact with oil or solvents which could affect the elasticity of the rubber, resulting in reduced grip.

2. Return the tensioning device to the position illustrated in the figure. The preloaded spring of the tensioner will ensure correct tensioning of the belt, after the engine has executed a few revolutions.

REMOVING TIMING BELT

Before removing the timing belt, remove the auxiliary components drive belt as described above.

3. Remove the engine bottom guard.

4. Remove the gearbox guard by undoing the bolts illustrated, and fit the flywheel locking tool 1860898000.

10.

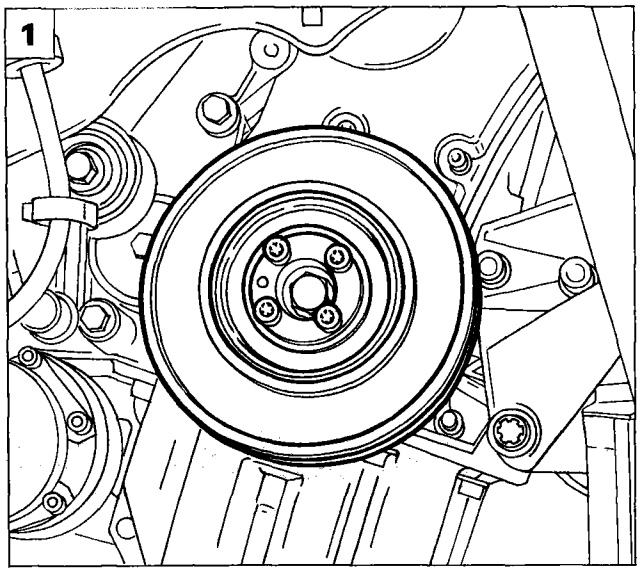

P4F14EX01

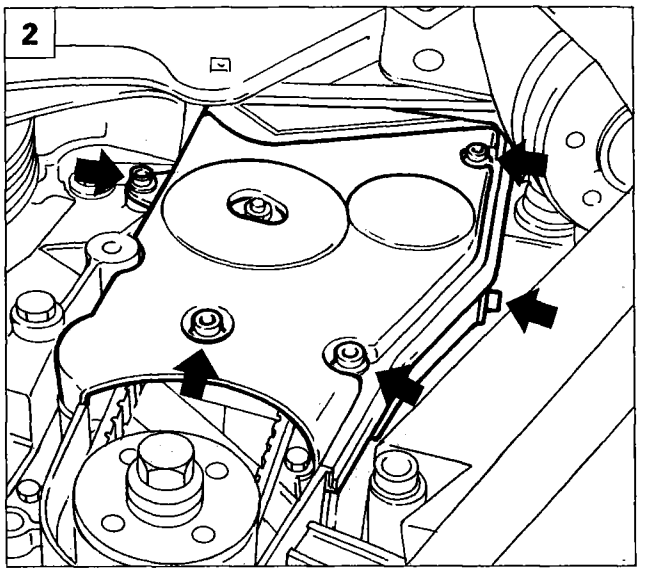

P4F14EX02

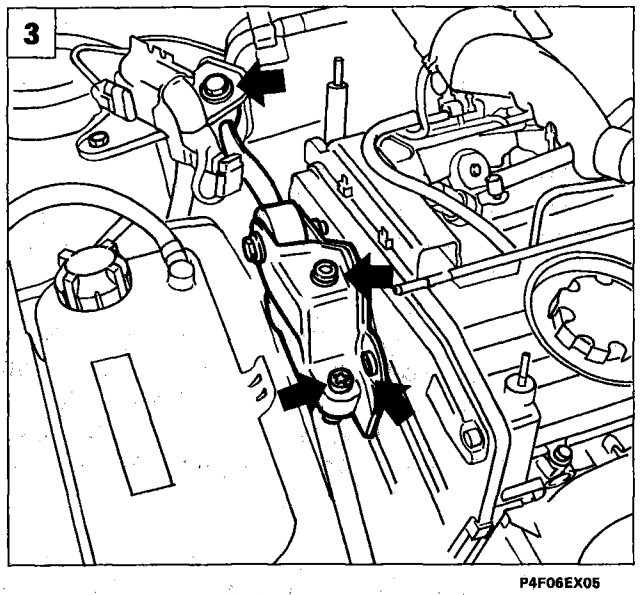

P4F06EX05

1. Remove the auxiliary components drive pully and the flywheel locking tool fitted previously.
2. Remove the timing belt bottom guard.
3. Undoing the attachment bolts illustrated, remove the reaction link complete with mounting bracket.
4. Remove the timing belt top guard.
5. Slacken the nut illustrated of the tensioning device, release the belt tension, then remove the belt.

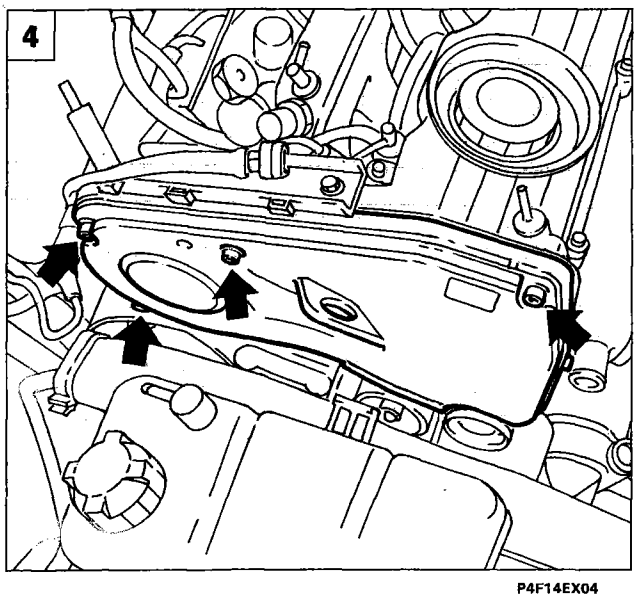

P4F14EX04

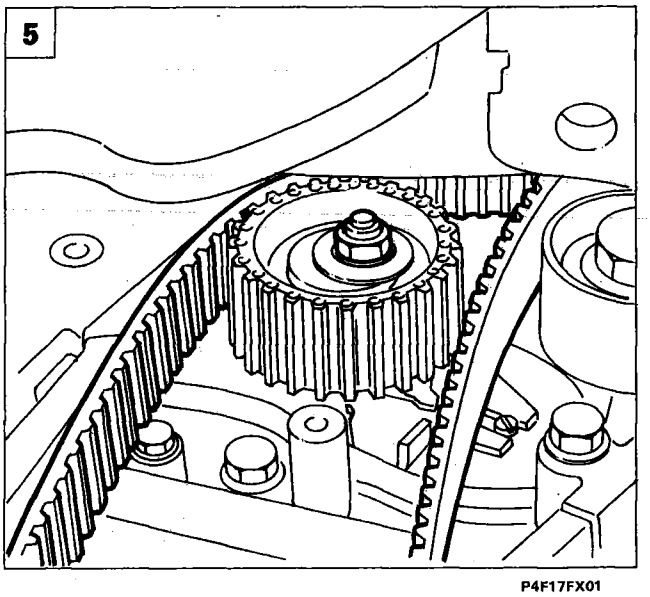

P4F17FX01

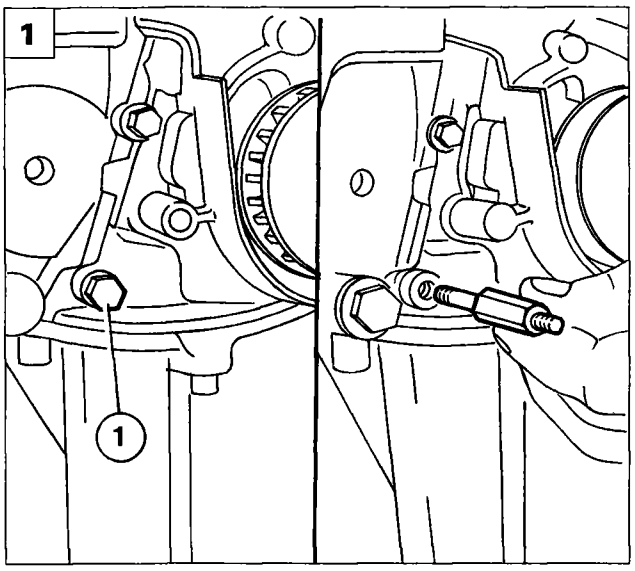

P4F15EX01

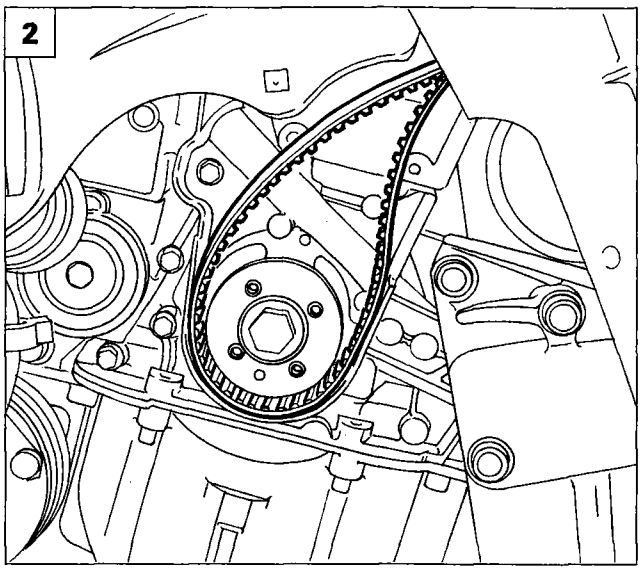

P4F15EX02

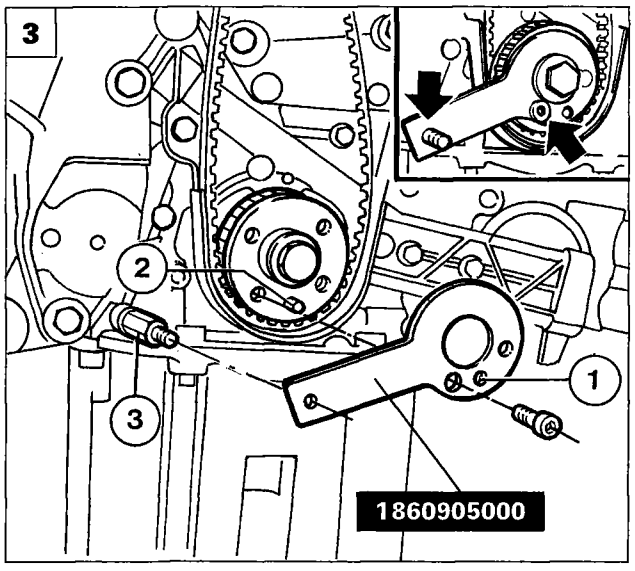

P4F15EX03

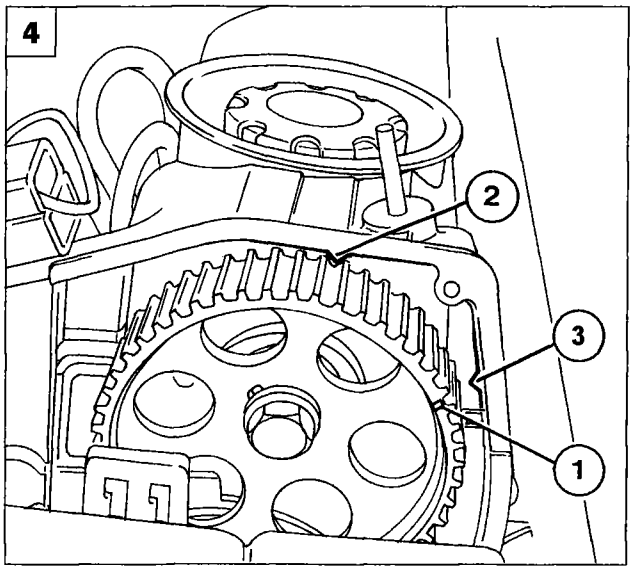

P4F13GX01

REFITTING AND TENSIONING TIMING BELT

1. Remove the bolt (1) illustrated, securing the oil pump; place the pin of tool 1860905000 in the place of the bolt.

2. Fit the timing belt on the crankshaft sprocket.

3. Place the tool 1860905000 on the crankshaft sprocket and on the pin (3); rotate the crankshaft a little at a time until the lug (2) matches the hole (1). In this position, TDC on the first cylinder is obtained.

4. Using tool 1860831000 turn the camshaft pulley until the following alignments are obtained:
   - up to engine no. 416499
     the mark (1) on the pulley must be shifted 7 teeth in a clockwise direction in relation to the mark (2) located on the rocker cover.
   - from engine no. 416450
     the mark (1) on the pulley must be lined up with the mark (3) on the rocker cover.

NOTE *The timing is correct when, with piston no. 1 at TDC, the mark (1) is in the position shown in the figure (for engines up to no. 416449, the correct position of the mark may vary by ± 3° engine or ½ cusp).*

Replacing timing belt

10.

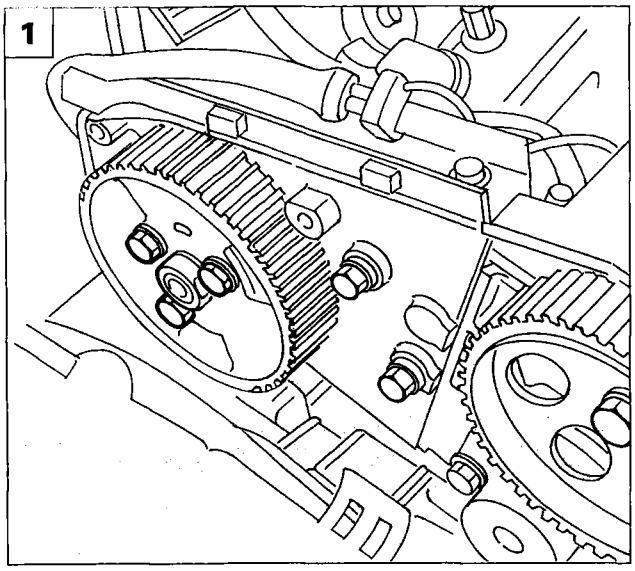

P4F16EX01

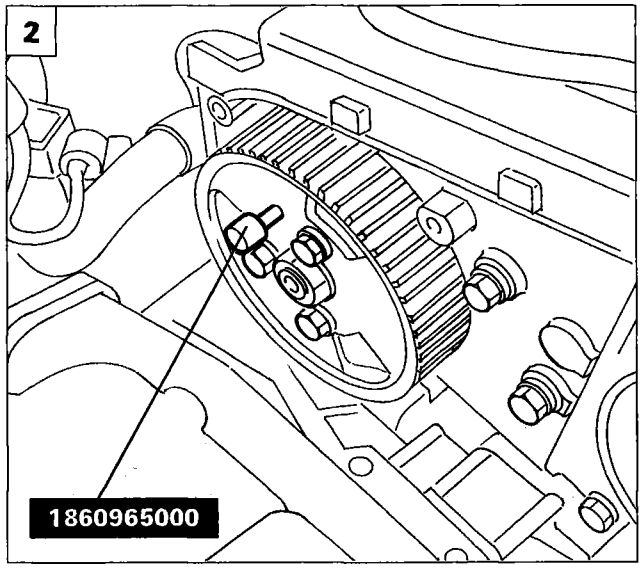

P4F16EX02

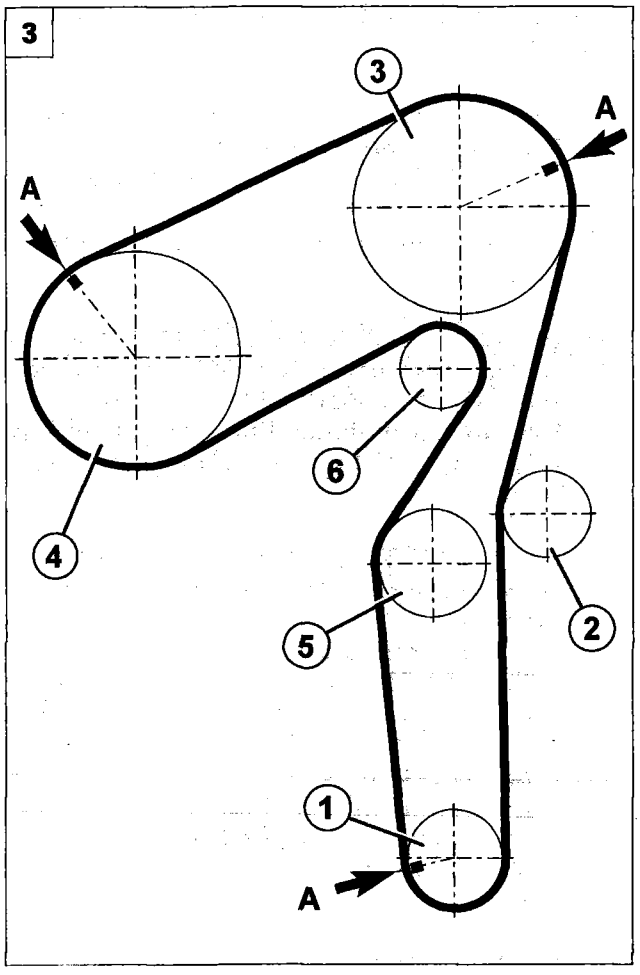

P4F16EX03

1. Undo the three bolts securing the fuel injection pump pulley.
2. Turn the fuel injection pump pulley until the pin 1860965000 can be inserted at the point illustrated.
3. Finish fitting the timing belt in the following order:

   1. Crankshaft sprocket
   2. Fixed tensioner
   3. Camshaft pulley
   4. Fuel injection pump pulley
   5. Automatic tensioner
   6. Coolant pump

For all pre- and post-modification engines, the new belt is fitted and the timing is adjusted by lining up the transversal marks (A) present on the back of the timing belt with their respective references on the pulleys.

NOTE *Fit the belt so that its arrow is in the direction of rotation of the engine.*

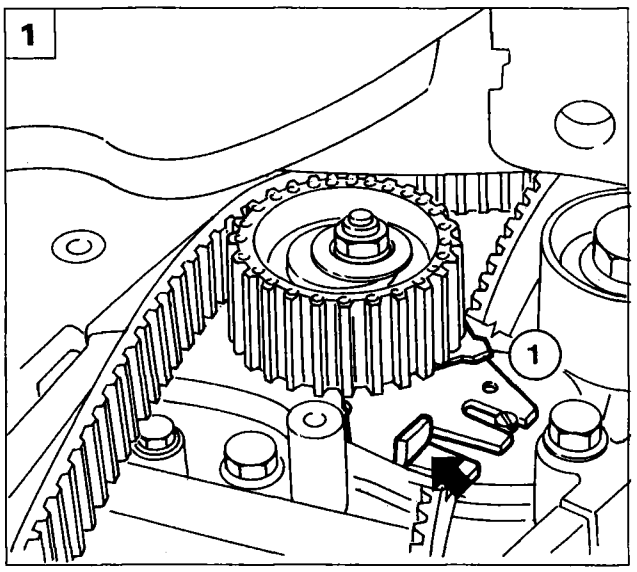

P4F18FX01

1. Apply force at the point indicated on the automatic tensioner, bringing the moving reference (1) of the tensioner to the maximum tension position, then lock the belt tensioner nut.

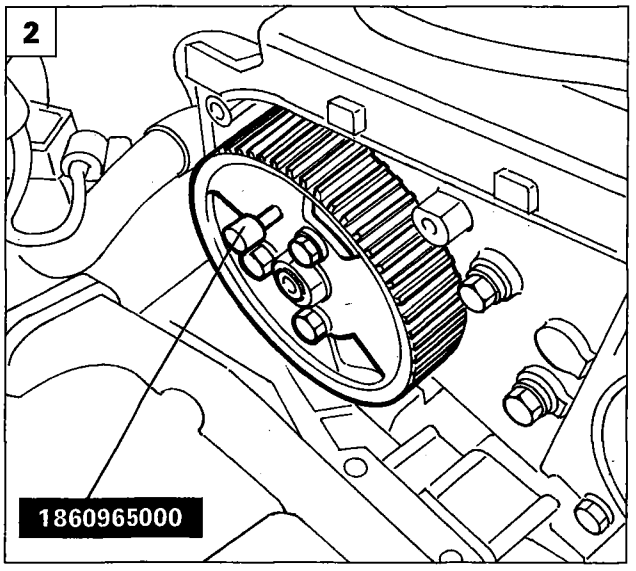

P4F17EX02

2. Secure the fuel injection pump pulley, tightening the bolts to the specified torque, and remove the pin 1860965000 from its seating.

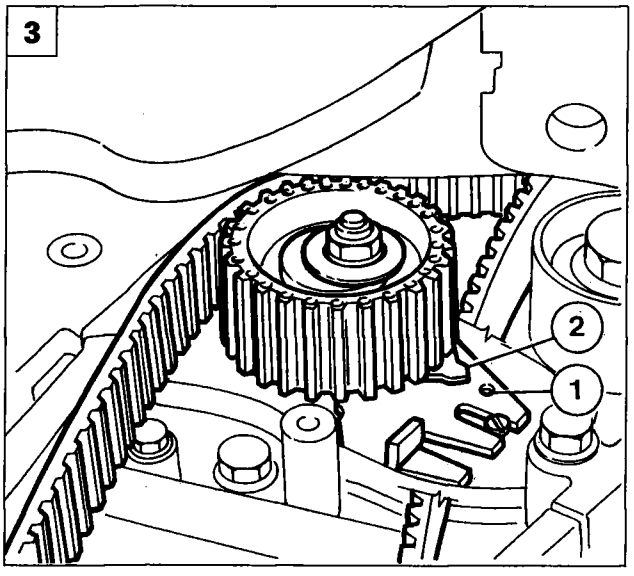

P4F18FX03

3. Turn the crankshaft two revolutions in the normal direction of rotation, slacken the tensioner nut and line up the fixed reference (1) on the tensioner mounting with the moving reference (2) on the belt tensioner. Then tighten the tensioner nut to the specified torque. Refit the parts by reversing the procedure described so far.

Copyright Fiat Auto

10.

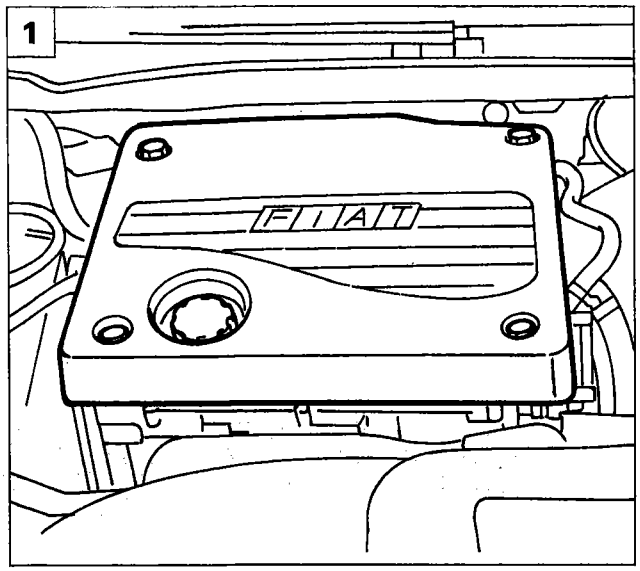

P4F01EX01

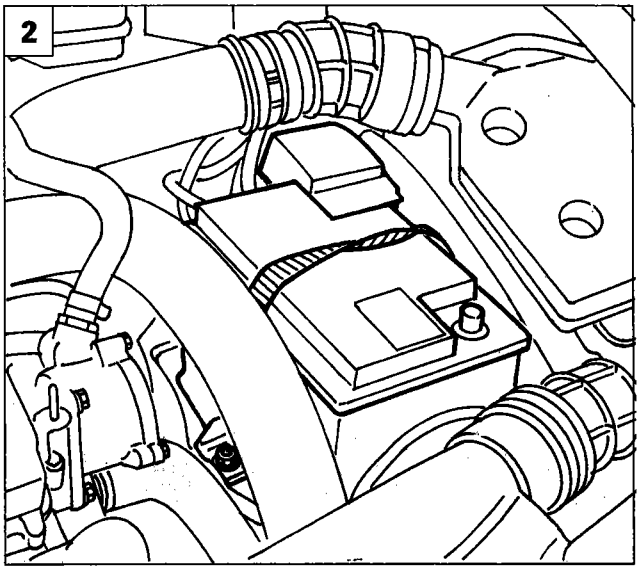

P4F01EX02

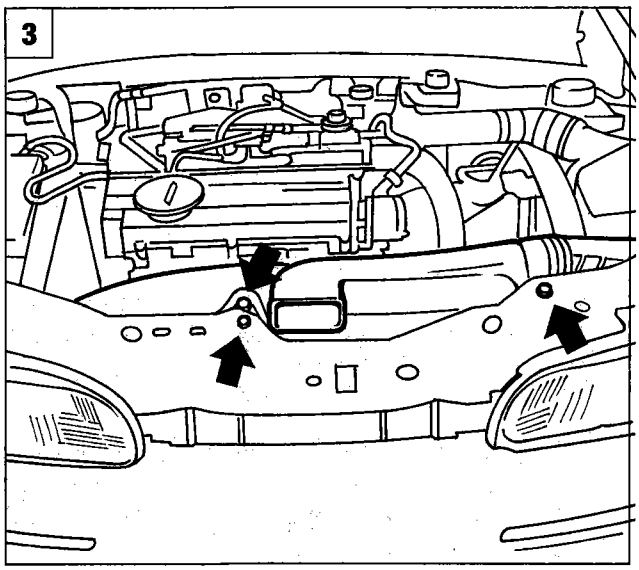

P4F01EX03

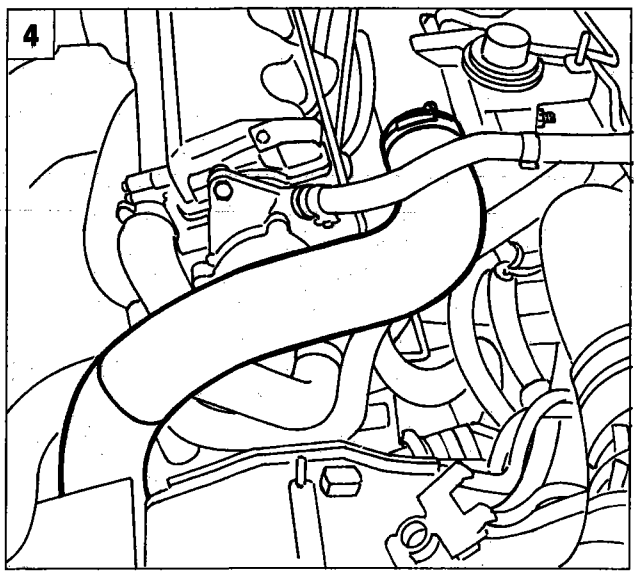

P4F03EX01

REMOVING CYLINDER HEAD

Place the car on ramps, remove the front wheels, disconnect the battery's negative pole then proceed as described below.

1. Remove the cylinder head top protection by undoing the attachment nuts.

2. Disconnect the battery's positive terminal (1), undo the nut (2), lift the bracket (3) and then remove the battery.

3. Undo the attachment bolts indicated and remove the air intake connection illustrated.

4. Undo the clip illustrated and disconnec the air intake hose from the inlet manifold.

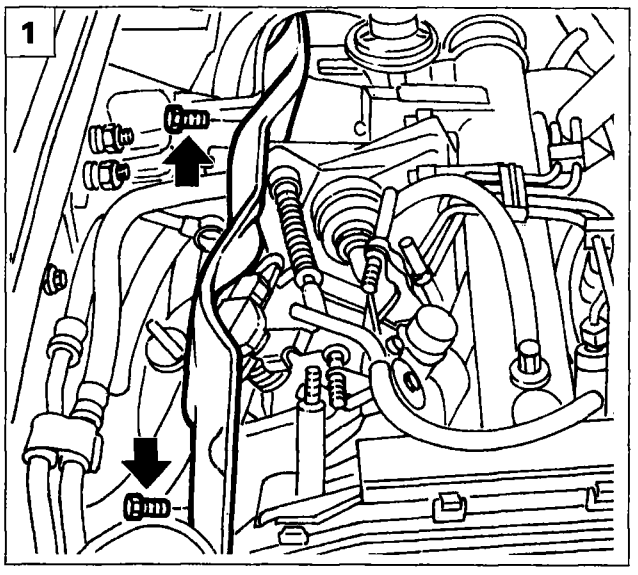

P4F06EX02

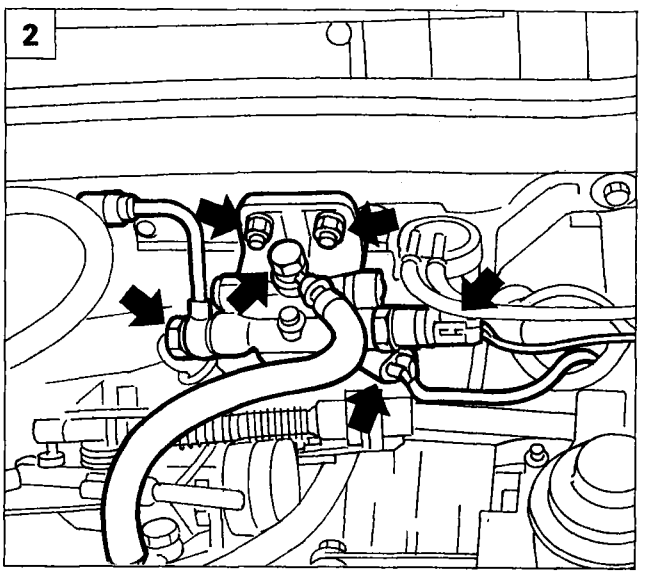

P4F19EX02

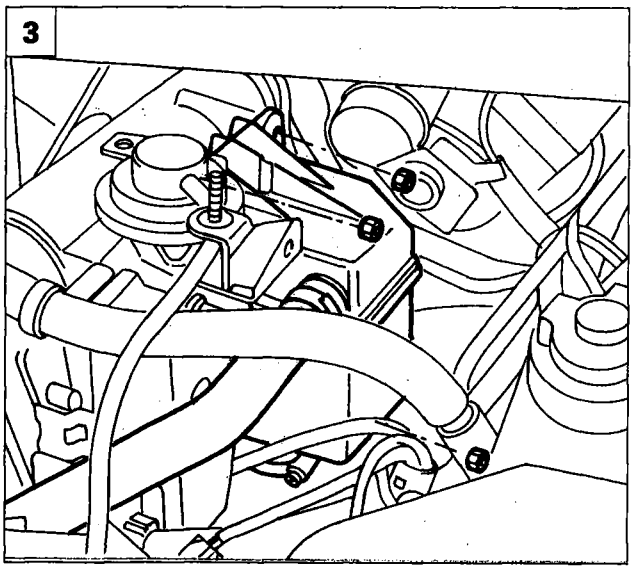

P4F087B05

1. Undo the two bolts and remove the bulkhead illustrated.
2. Disconnect the two wiring connections illustrated, undo the nuts, disconnect the two fuel connections and then remove the diesel filter.
3. Undo the clip and disconnect the pipe indicated, then undo the nuts illustrated and move the oil vapour separator over in the engine compartment.
4. Disconnect the accelerator cable from the points indicated.
5. Disconnect from the vacuum unit the air pipe to the brake servo.

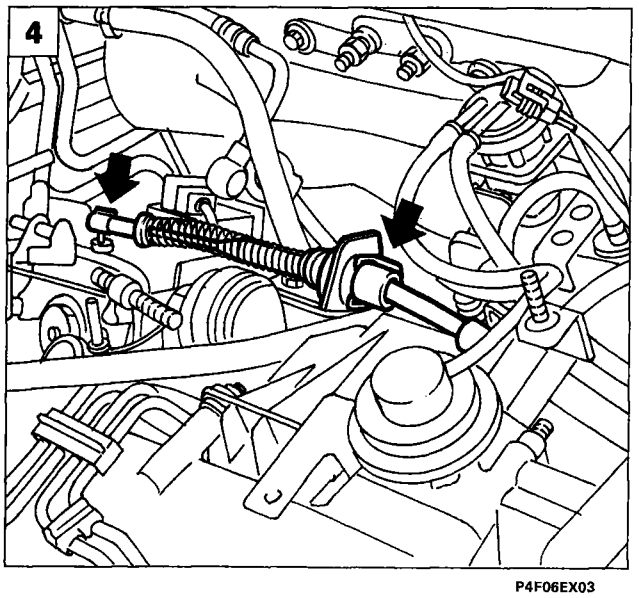

P4F06EX03

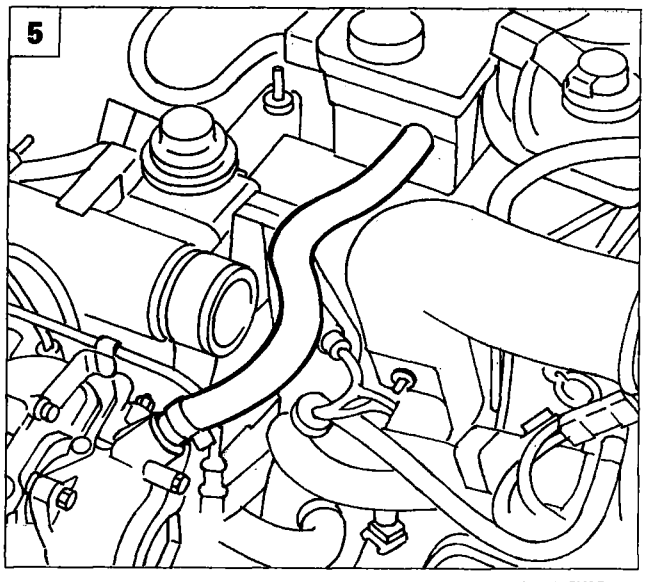

P4F19EX05

Copyright Fiat Auto

10.

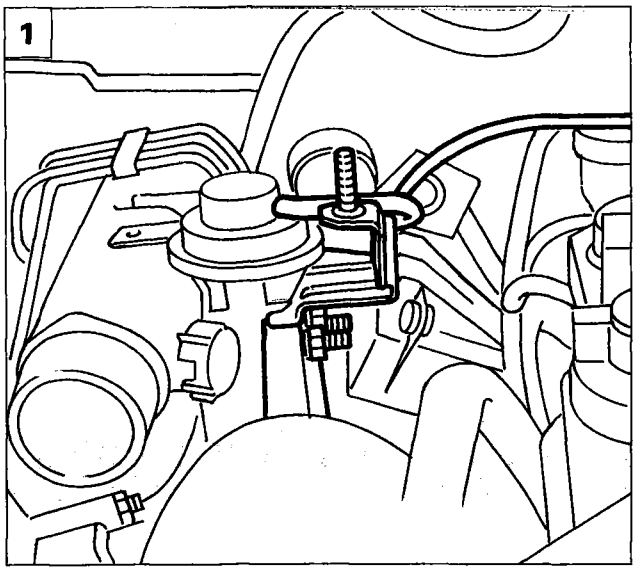

P4F20EX01

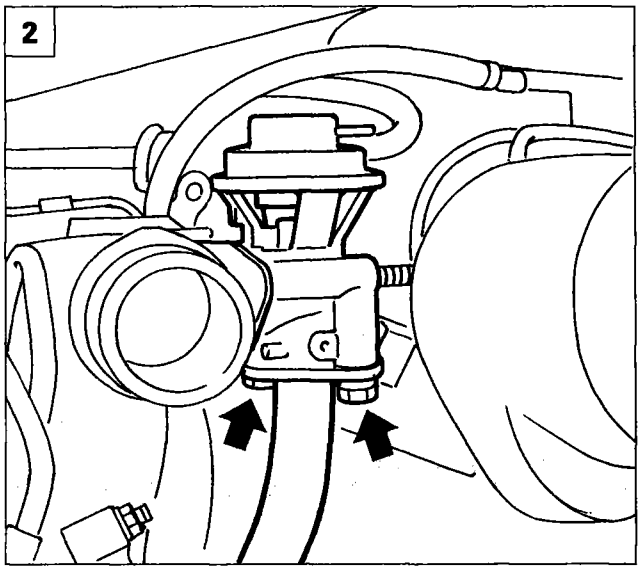

P4F20EX02

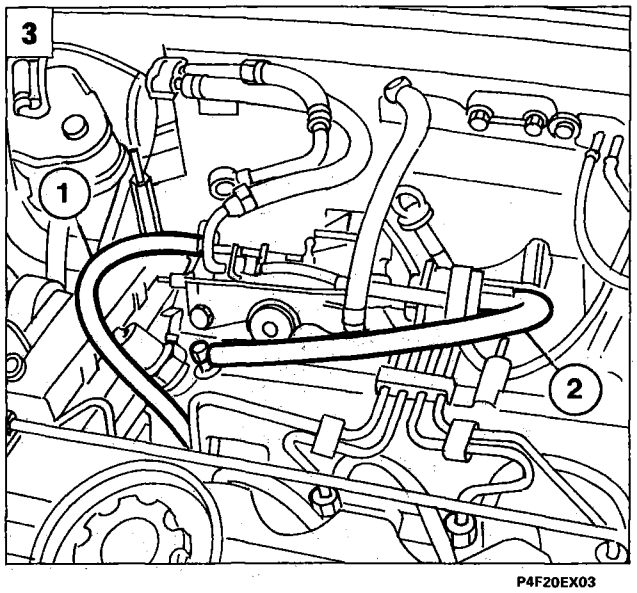

P4F20EX03

1. Disconnect the fuel vapour cut-off solenoid pipe from the EGR, undo the nuts indicated and remove the bracket illustrated.
2. Undo the bolts indicated, detach the EGR valve from its pipe, then remove it.
3. Disconnect the fuel recovery pipe (1) from the fuel return hose and the pipe (2) from the inlet manifold.
4. Using the wrench 1852138000 undo the diesel supply pipe connections on the fuel injectors.
5. Undo the diesel supply pipe connections on the fuel injection pump, then remove the pipes.

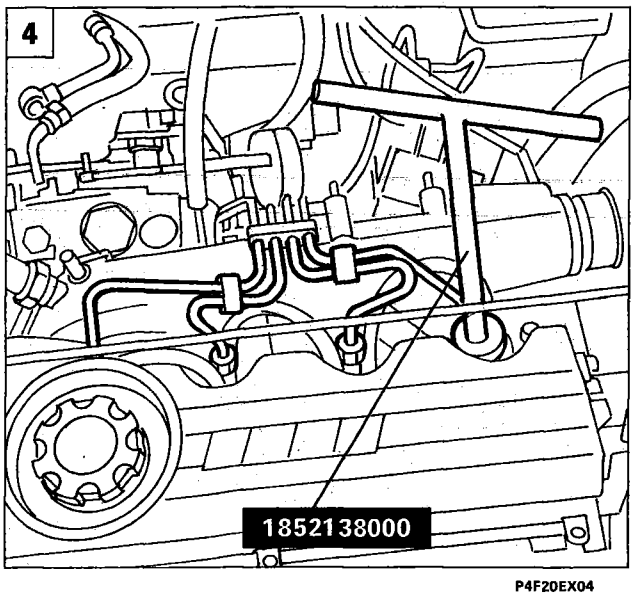

P4F20EX04

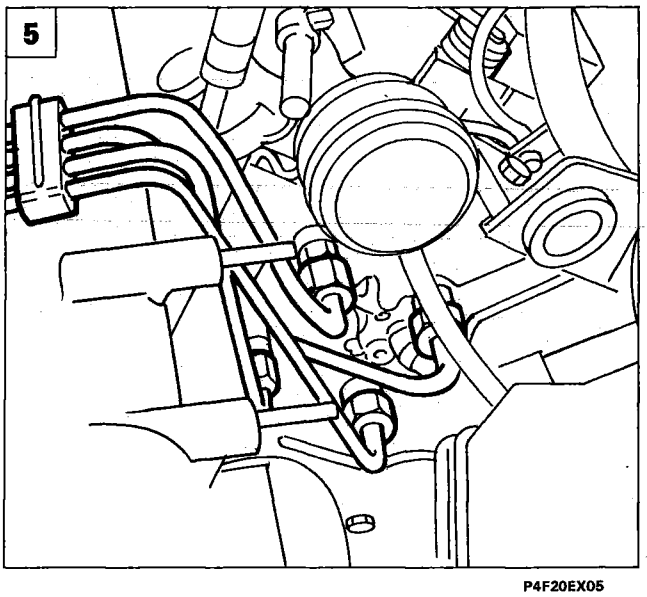

P4F20EX05

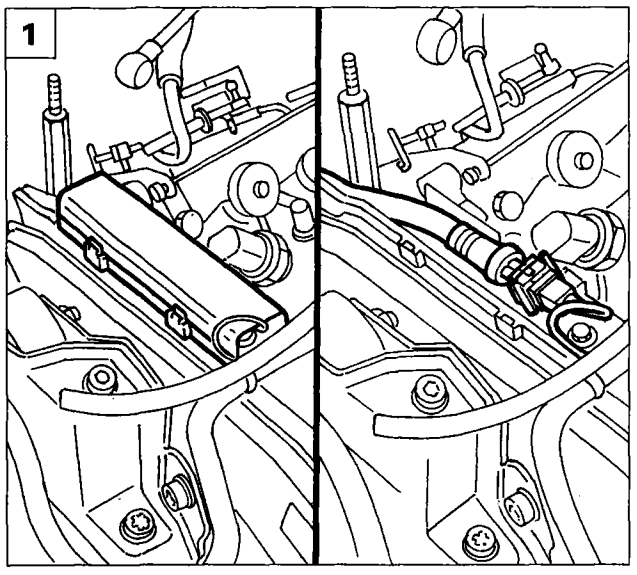

P4F21EX01

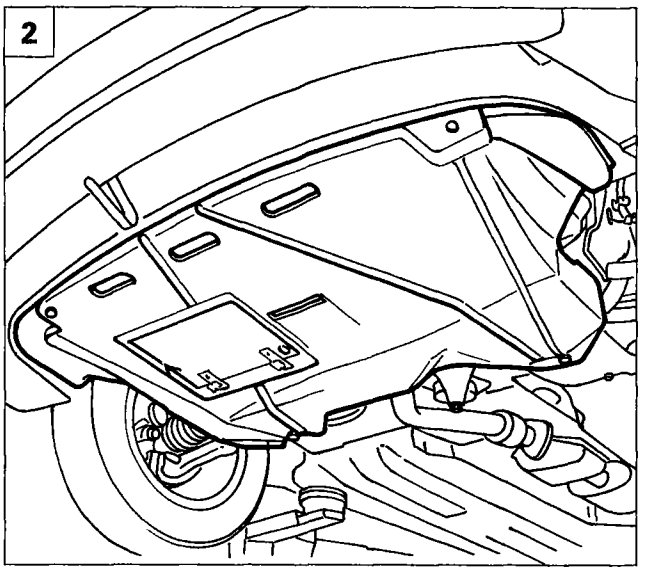

P4F003B01

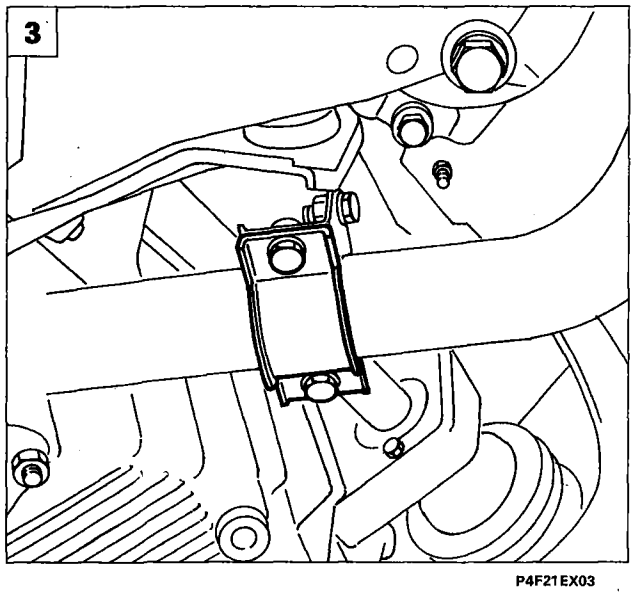

P4F21EX03

1. Open the wiring cover illustrated and disconnect the wiring connector from the instrumented injector.

2. Raise the ramps and remove the engine compartment bottom guard.

3. Undo the bolts illustrated and disengage the exhaust pipe from the anti-vibration bracket illustrated.

4.5. Remove the two reinforcement brackets securing the turboblower to the engine block.

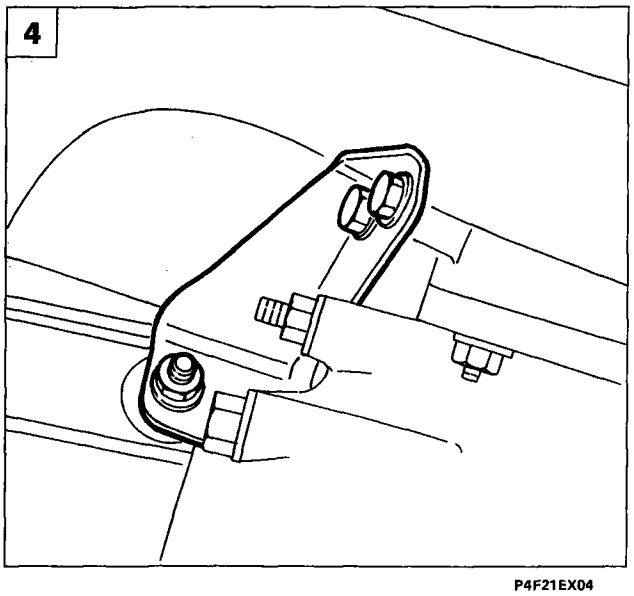

P4F21EX04

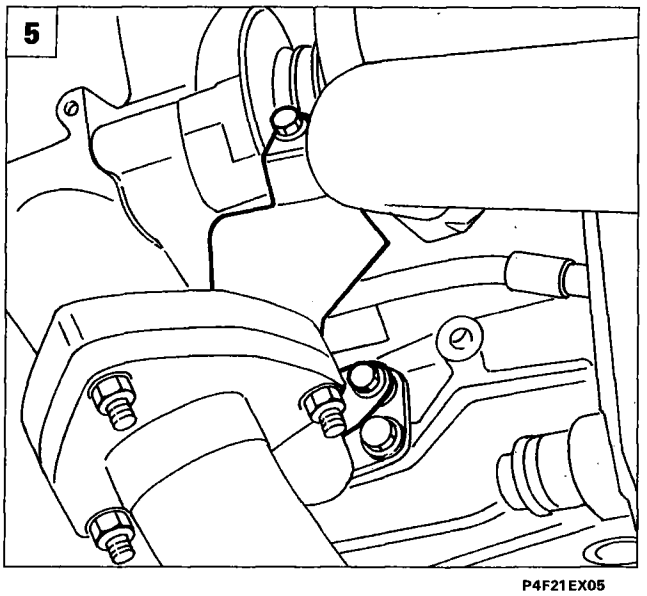

P4F21EX05

Copyright Fiat Auto

Removing - refitting cylinder head

10.

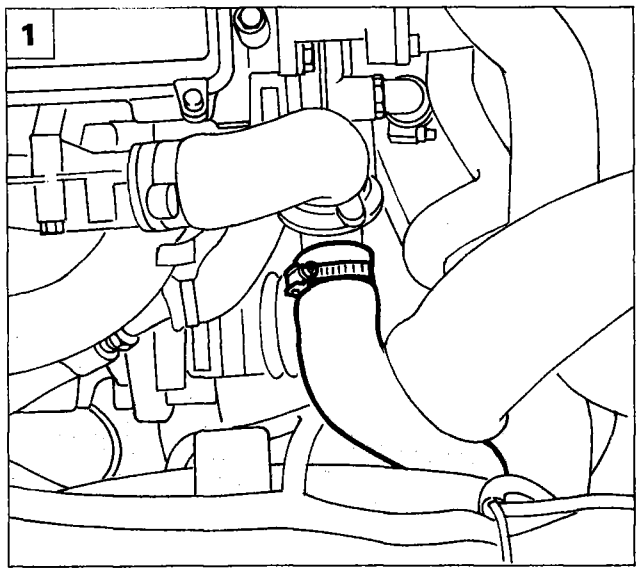

P4F22EX01

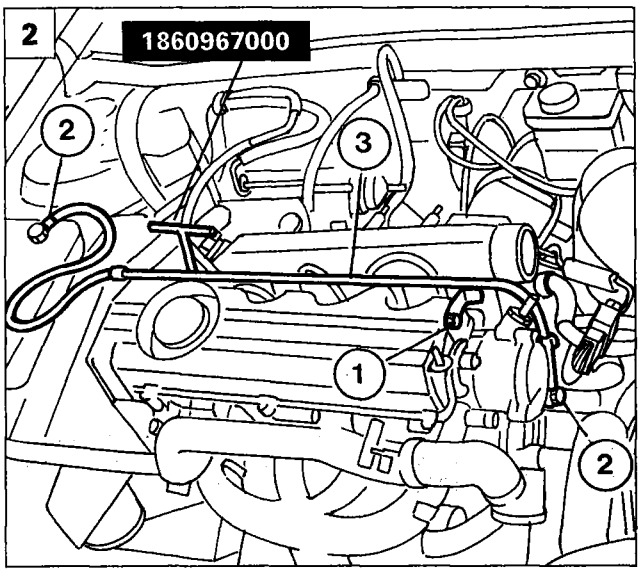

P4F22EX02

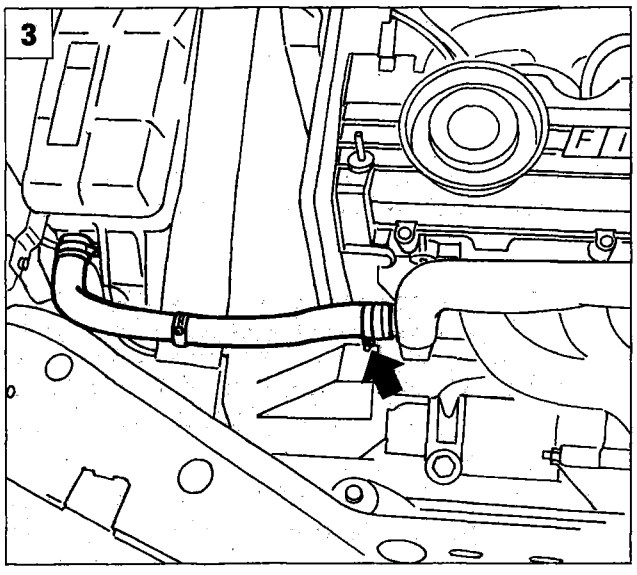

P4F22EX03

1. Prepare a container to collect the coolant, then disconnect the pipe illustrated and drain the coolant.

2. Using tool 1860967000 undo the connection on the head, undo the bolt (1), disconnect the clips (2), then remove the coolant pipe (3) from the cylinder head.

3. Disconnect the pipe illustrated from the cylinder head.

4. Disconnect the pipes illustrated from the thermostat.

5. Disconnect the wiring connections on the coolant temperature sender and sensor.

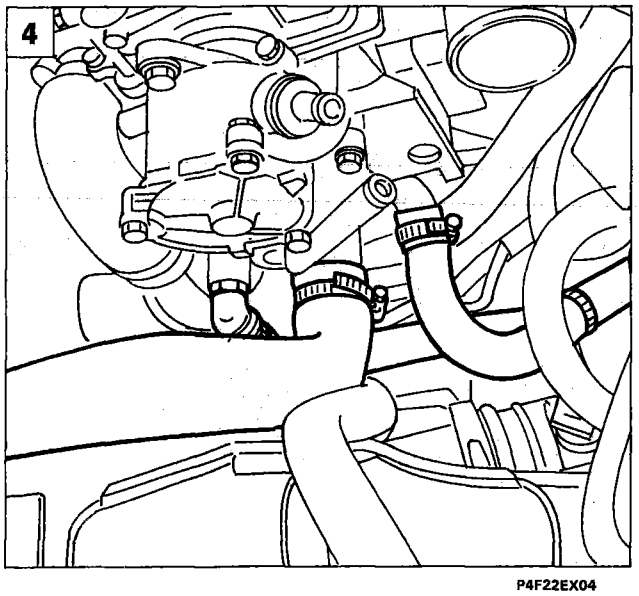

P4F22EX04

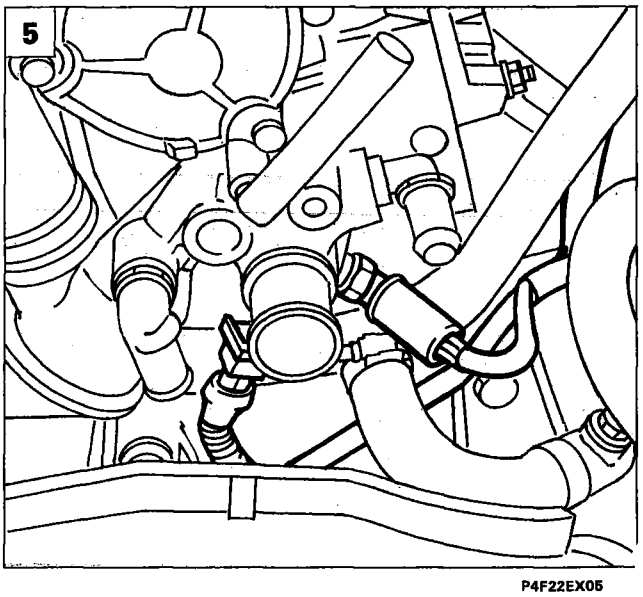

P4F22EX05

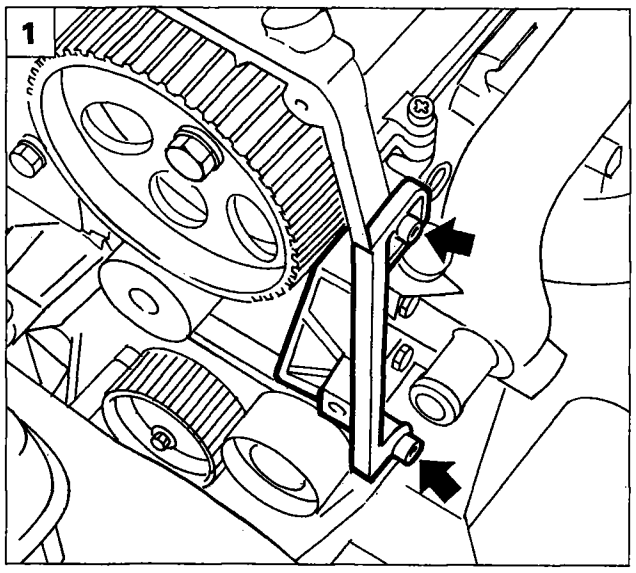

P4F23EX01

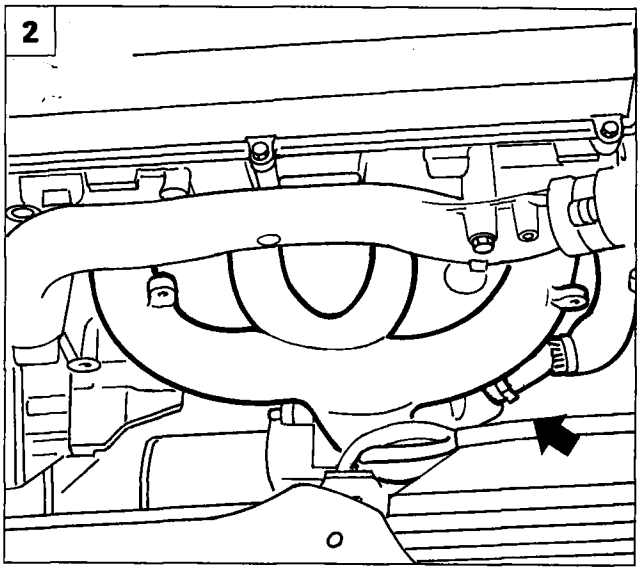

P4F23EX02

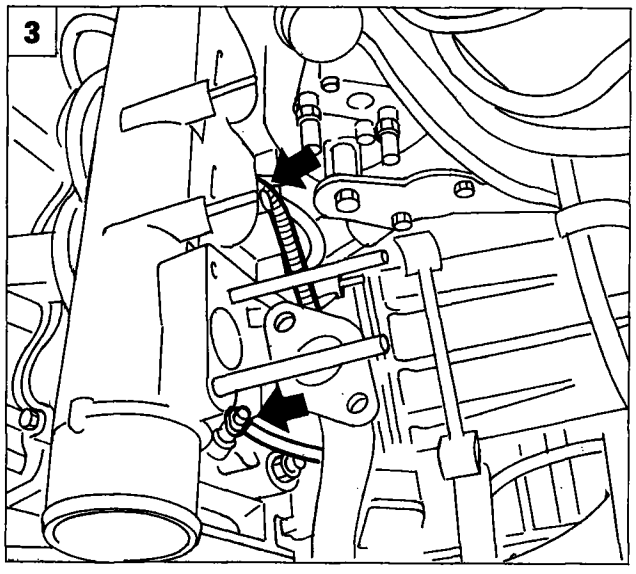

P4F23EX03

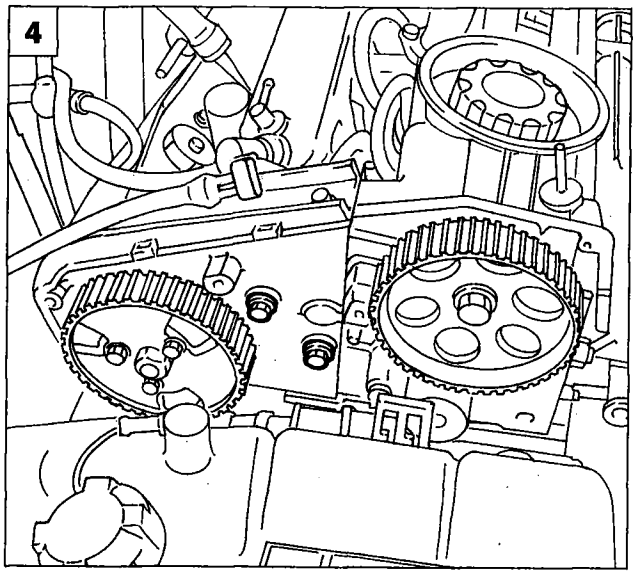

P4F23EX04

Remove the auxiliary components drive belt and timing belt as described in the above sub-sections.

1. Undo the bolts illustrated and remove the timing belt side guard.

2. Undo the nuts securing the exhaust manifold to the cylinder head, undo the nut illustrated and move the EGR valve rigid pipe away from the manifold, then release the exhaust manifold from its pins.

3. Undo the nuts illustrated and disconnect the spark plug supply leads.

4. Undo the bolts securing the inlet manifold to the injection pump mounting bracket.

Copyright Fiat Auto

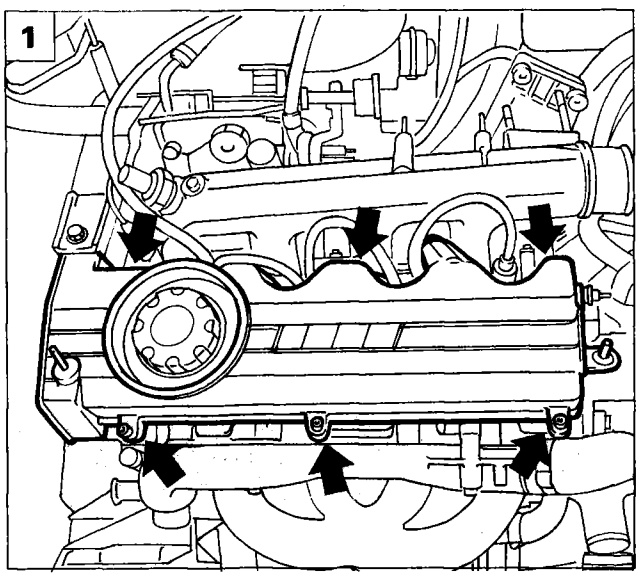

P4F24EX01

1. Remove the tappet cover.

2. Using the wrench 1852152000 undo the bolts securing the cylinder head to the engine block then remove it together with the inlet manifold.

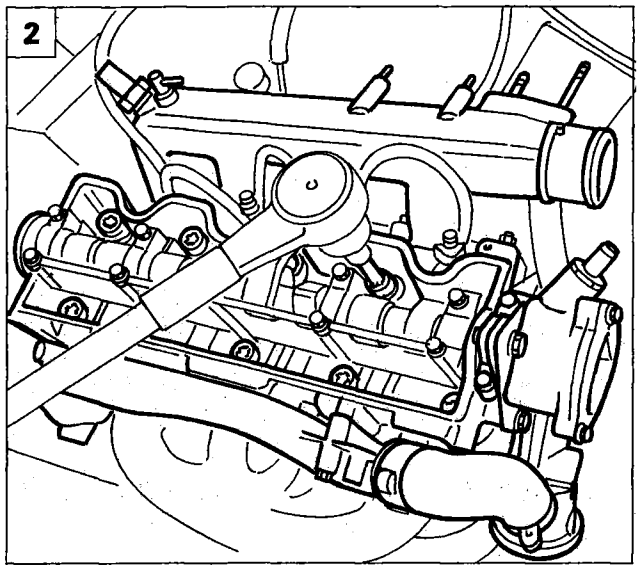

P4F24EX02

REFITTING CYLINDER HEAD GASKET

3. After checking the projection of the piston from the engine block top surface, in order to keep the compression ratio within tolerance limits, fit the cylinder head gasket of the thickness indicated in the table. Fit the gasket on the engine block, fitting it on the centring pins so that the word "ALTO" ("TOP") faces the operator.

Average piston projection	Cyl.head gasket thickness	No. of notches
up to 0.80 mm	1.6 mm	-
0.80 - 0.90 mm	1.7 mm	1
over 0.90 mm	1.8 mm	2

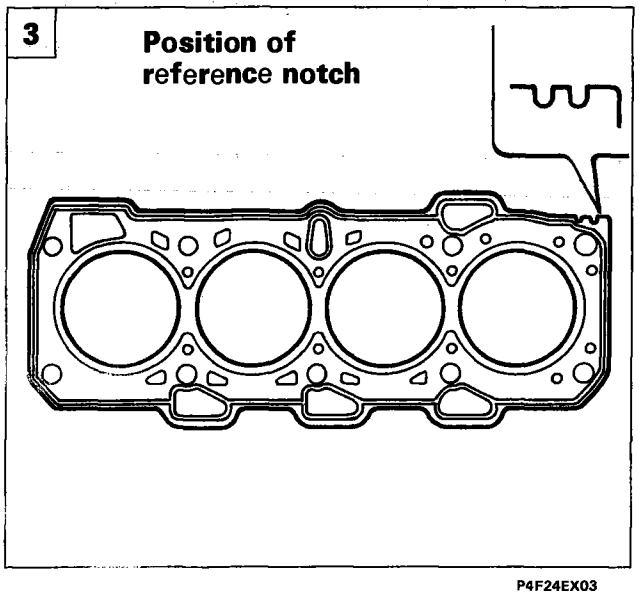

P4F24EX03

The cylinder head gasket is of the ASTADUR type. Because of the special material from which it is made, this gasket undergoes a polymerization process during engine operation, so it hardens significantly during use. To ensure polymerization of the cylinder head gasket, the following is necessary:

- *keep the gasket sealed in its nylon bag;*
- *do not unwrap it until just before assembly;*
- *do not lubricate or dirty the gasket with oil, and make sure that the cylinder head and engine block surfaces are thoroughly clean.*

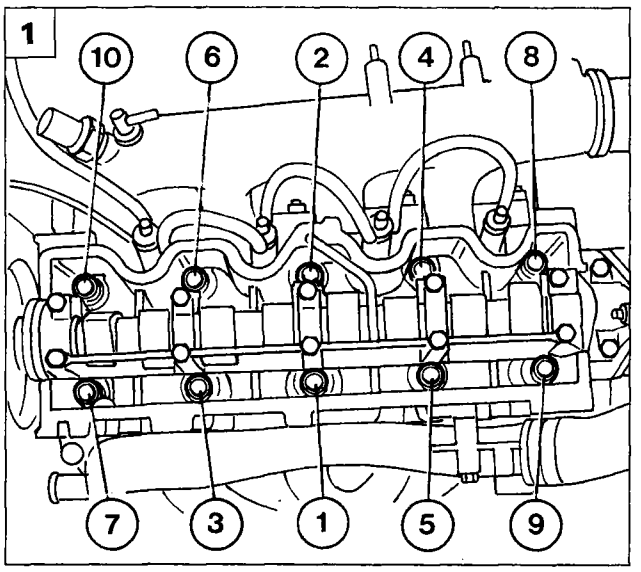

P4F25EX01

REFITTING AND TIGHTENING CYLINDER HEAD

1. Place the cylinder head on the engine block, then tighten the bolts to torque, bearing in mind that the tightening sequence is as shown in the figure for every stage of tightening.

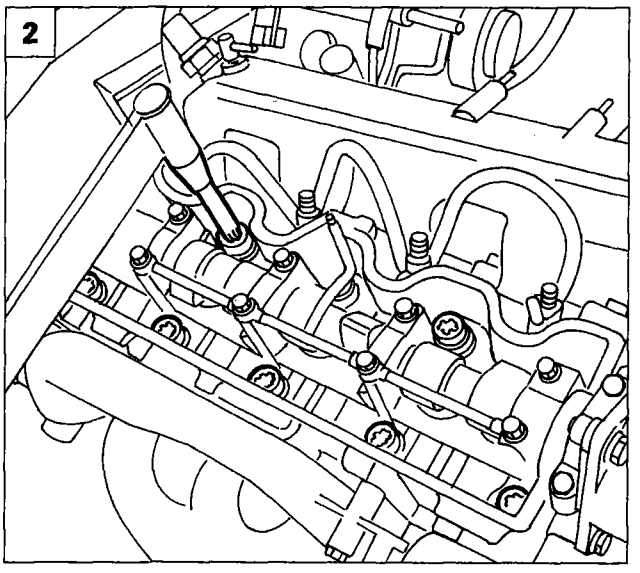

P4F25EX02

2. Lubricate bolts and washers and leave to drain for at least 30 minutes; tighten the bolts to a torque of 2 daNm, then tighten to a torque of 6.5 daNm using the wrench 1852154000.

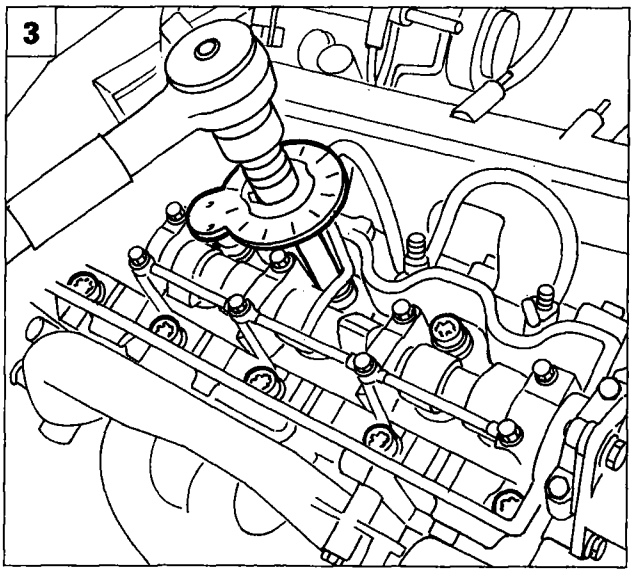

P4F25EX03

3. Tighten the bolts by an angle of 270° in three separate stages(90°+90°+90°) using the wrench 1852154000 fitted to the tool 1860942000.

Copyright Fiat Auto

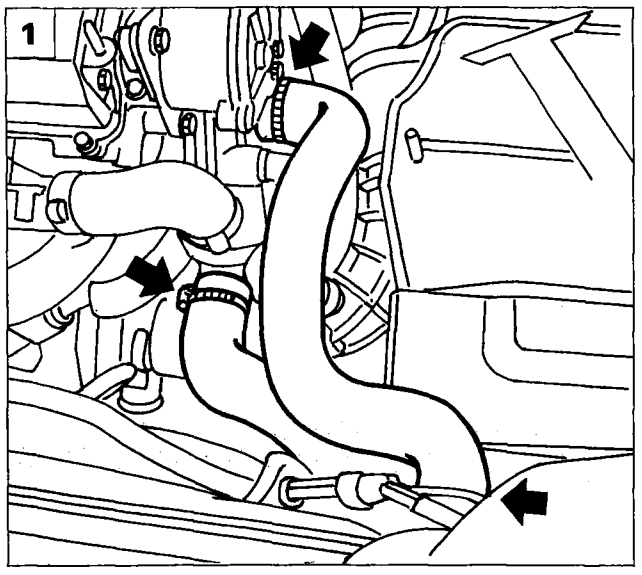

P4F03EX02

REPLACING COOLANT PUMP

Before removing the coolant pump, remove the auxiliary components drive belt and timing belt as described above.

1. Prepare a container for collecting the coolant and disconnect the coolant hoses illustrated from the points indicated.

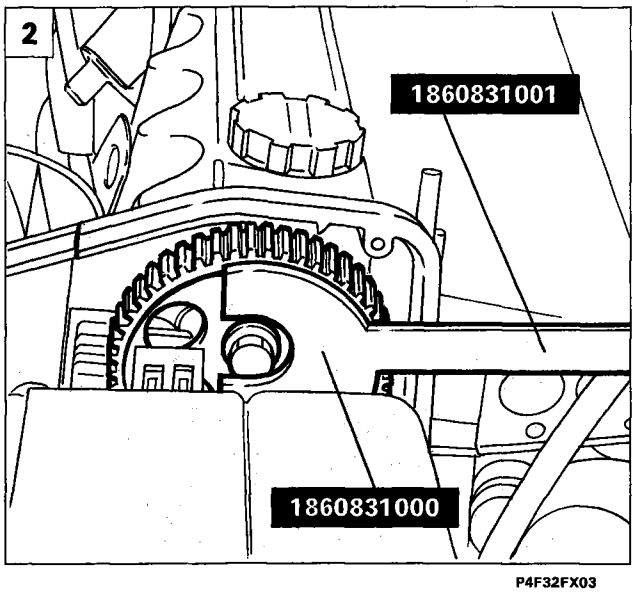

P4F32FX03

2. Using tools 1860831001 and 1860831000, undo the nut securing the camshaft pulley.

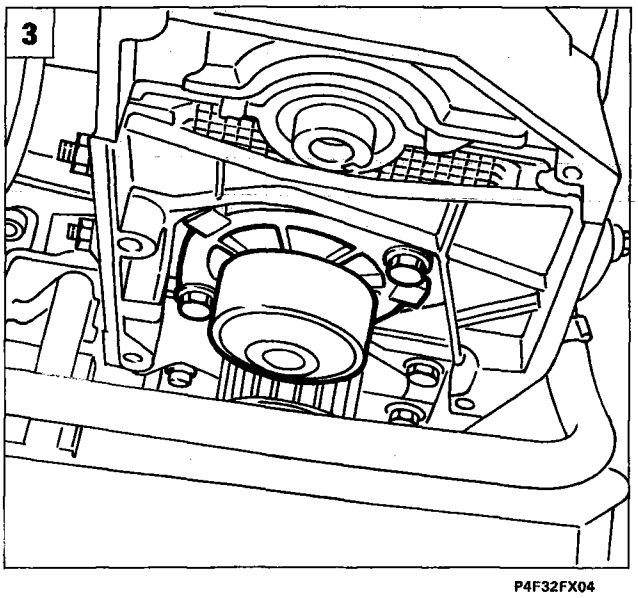

P4F32FX04

3. Remove the coolant pump from the cylinder head.

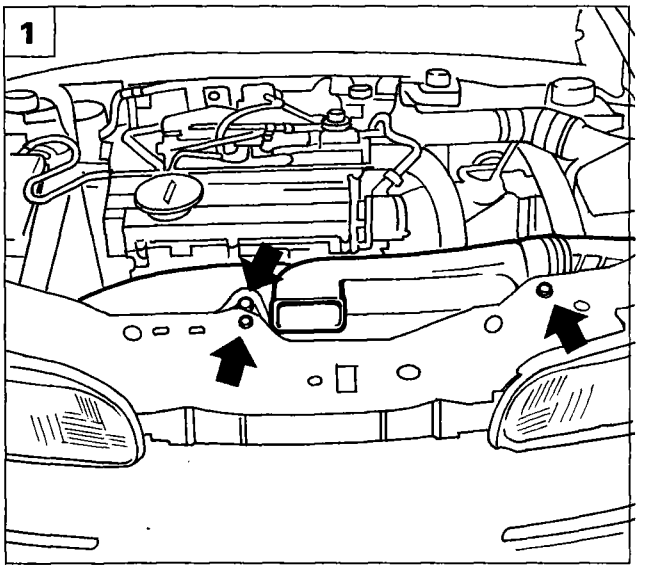

P4F01EX03

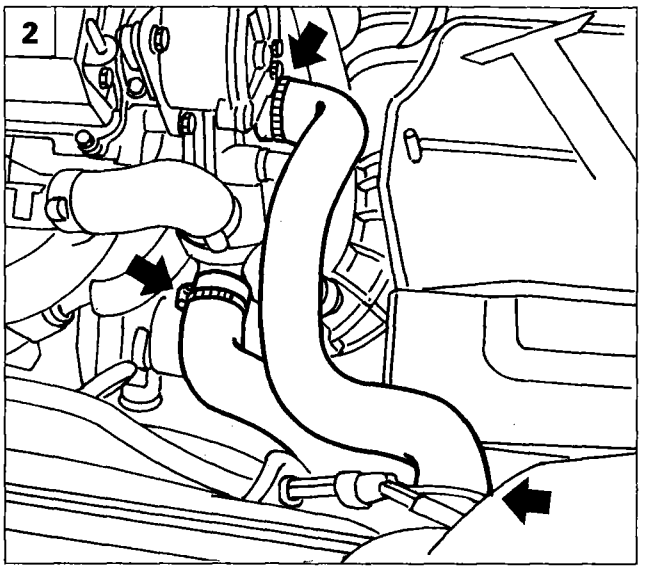

P4F03EX02

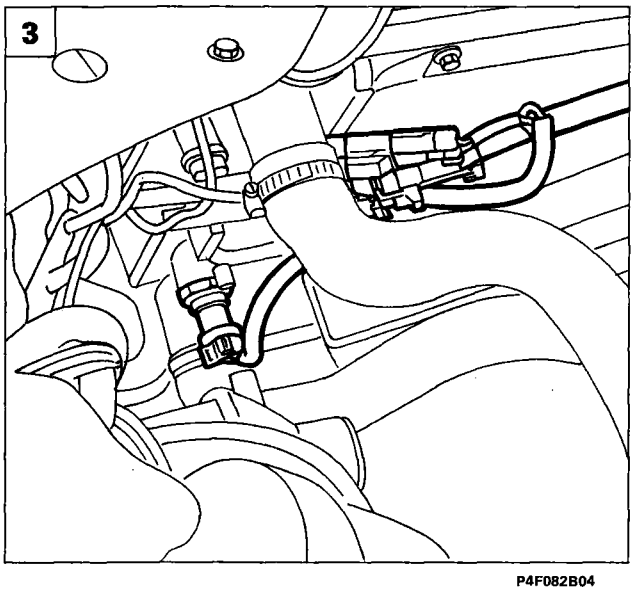

P4F082B04

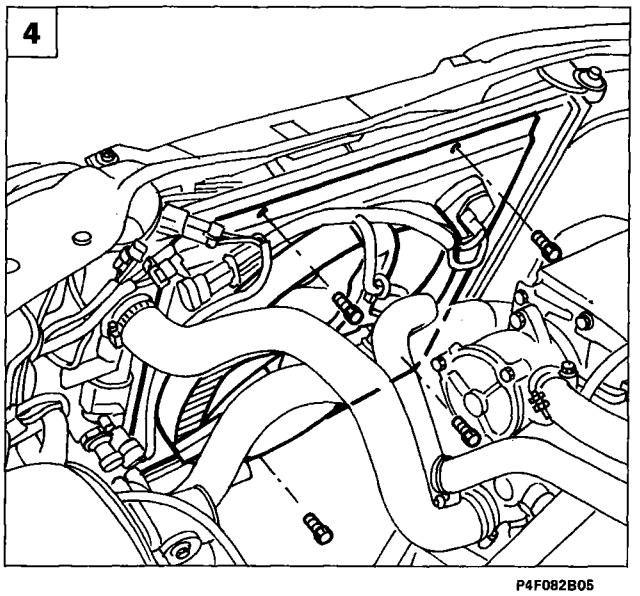

P4F082B05

REMOVING - REFITTING RADIATOR

Place the car on ramps, remove the front wheels, disconnect the battery's negative pole and then proceed as described below.

1. Undo the bolts (arrowed) and remove the air intake connection illustrated.

2. Prepare a container to collect the engine coolant, then disconnect the pipes illustrated and drain the coolant.

3. Disconnect the wiring connections from the fan and thermostatic switch.

4. Undo the bolts illustrated securing the fan to the radiator, then remove the fan.

Removing - refitting radiator

10.

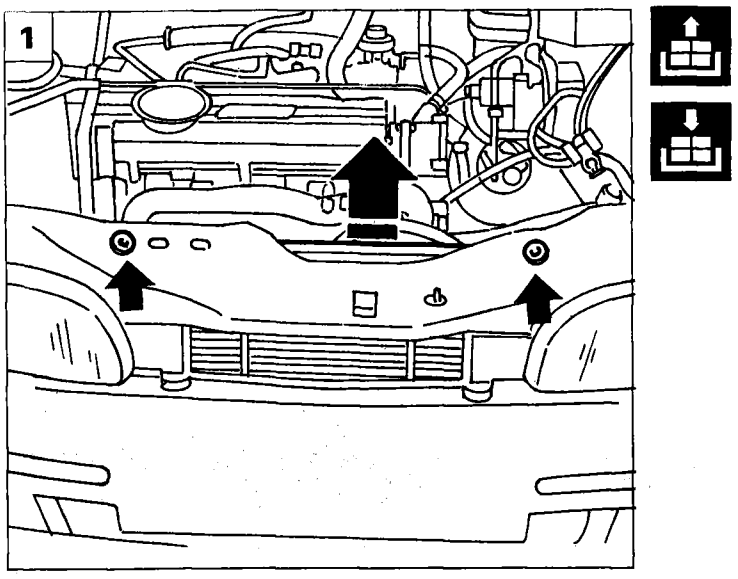

1. Undo the bolts securing the radiator to the body shell, release it from the front pins, then withdraw it from the top of the engine compartment.

PROCEDURE FOR FILLING THE ENGINE COOLING SYSTEM (version with heating and air conditioning with engines from 75 bhp and 100 bhp)

- Make sure that the cooling system components (engine, heater, radiator, etc.) are fully empty.
- Open the bleed (A) located on the heater outlet hose, open the bleed (B) located on the rigid cooling pipe on the cylinder head, and open the bleed (C) on the radiator; for versions with air conditioning, also open the bleed (D) on the radiator.
- Disconnect the hose (E) from the point indicated connecting the expansion tank/thermostat, blow compressed air into the hose to empty the pipe fully. At the end of the operation, reconnect the hose.
- Fill the system by slowly pouring the coolant (50% water and 50% paraflù), until liquid emerges from the bleed (A) on the radiator outlet hose, then close the latter.
- Continue filling until liquid emerges from the bleed (B) on the rigid pipe, then close the bleed.
- Continue filling until liquid emerges from the bleed (C) on the radiator, then close the bleed. For versions with air conditioner, close the bleed (D) at the same time as the bleed (C).
- Finish filling until the the MAX level mark on the expansion tank is reached.
- Start the engine and run it at idle speed for about 2 or 3 minutes.
- Then accelerate periorically until the engine speed is around 3000 rpm, and if necessary top up the coolant level in the expansion tank without ever exceeding the MAX mark.
- Wait until the fan has come on at least twice, then stop the engine.
- Allow the engine to cool and, if necessary, top up until the level is between the MIN and MAX marks on the expansion tank.

NOTE *If the coolant boils while the engine is running, stop the procedure to search for and replace the faulty component which has caused the boiling, then repeat the filling procedure.*

Location of cooling system bleeds on 75 bhp and 100 bhp engines (version with heating and air conditioning)

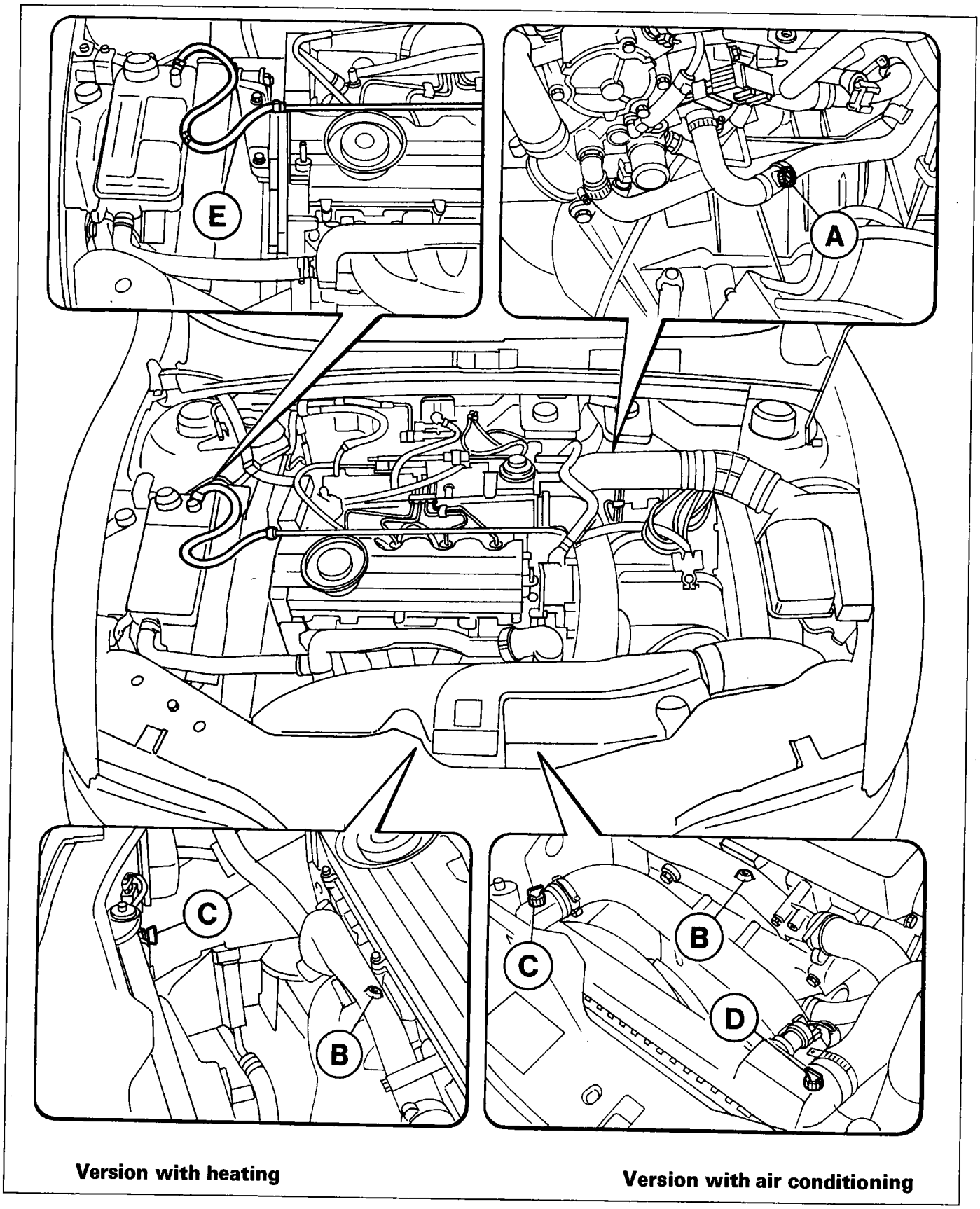

P4F29EX01

Copyright Fiat Auto

page

REMOVING - REFITTING

- Removing - refitting power unit 1

REPLACING AUXILIARY BELT

- Removing - refitting auxiliary belt 10

REPLACING TIMING BELT

- Removing timing belt 11
- Refitting timing belt and adjusting tension 13

REMOVING - REFITTING CYLINDER HEAD

- Removing cylinder head 15
- Fitting cylinder head gasket 21
- Refitting cylinder head and tightening 22

REPLACING COOLANT PUMP

- Replacing coolant pump 22

REMOVING - REFITTING RADIATOR

- Removing - refitting radiator 23
- Cooling system filling procedure 24

Copyright Fiat Auto

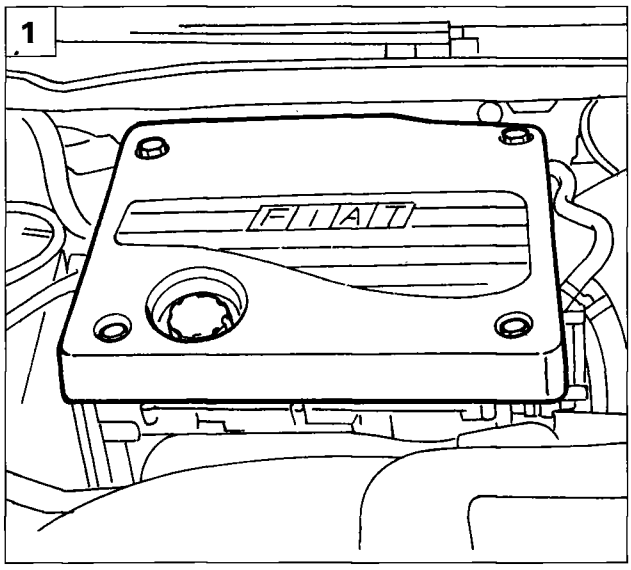

P4F01EX01

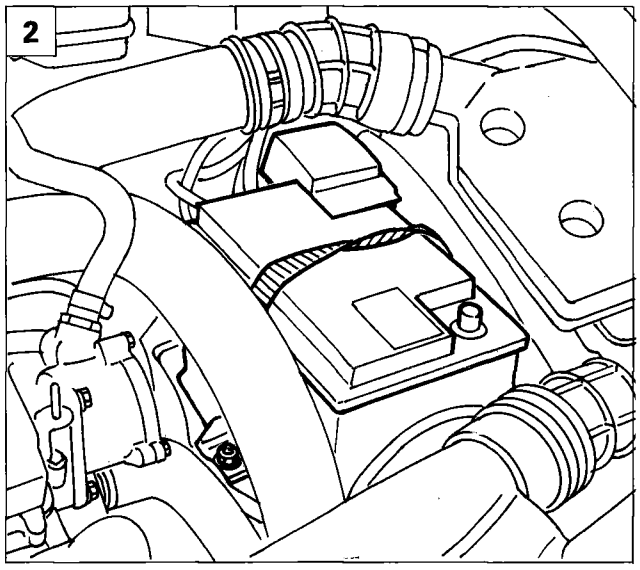

P4F01EX02

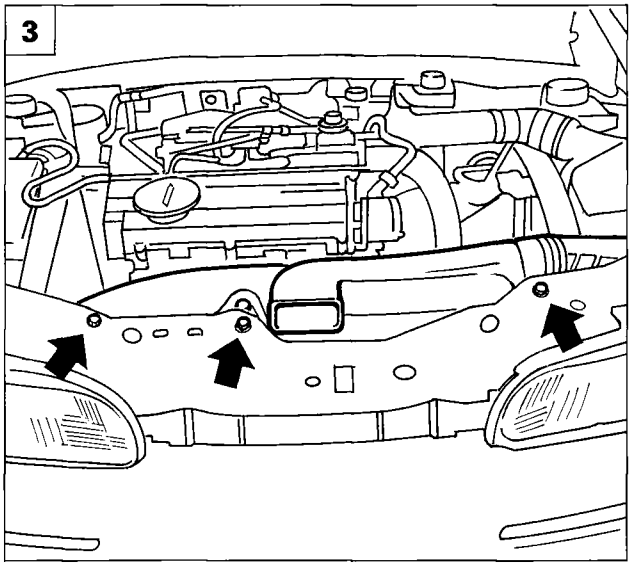

P4F01GX01

REMOVING - REFITTING

Position the vehicle on a lift, remove the front wheels and disconnect the battery negative terminal. Then proceed as follows.

1. Remove the upper engine protection.
2. Disconnect the battery positive terminal, unscrew the nut retaining the battery to its tray and remove from the engine bay.
3. Unscrew the retaining bolts shown and remove the air intake shown.
4. Raise the lift and remove the lower engine bay protection.
5. Use tool 1878077000 to undo the stud, unscrew the bolts and release the dust shield from its housing.

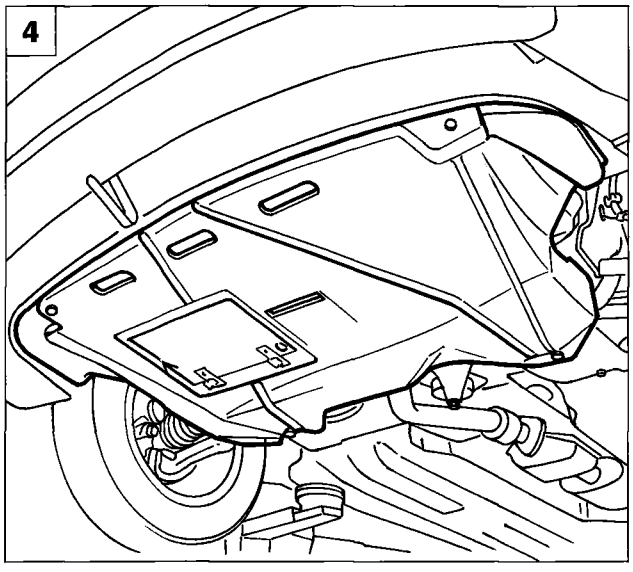

P4F003B01

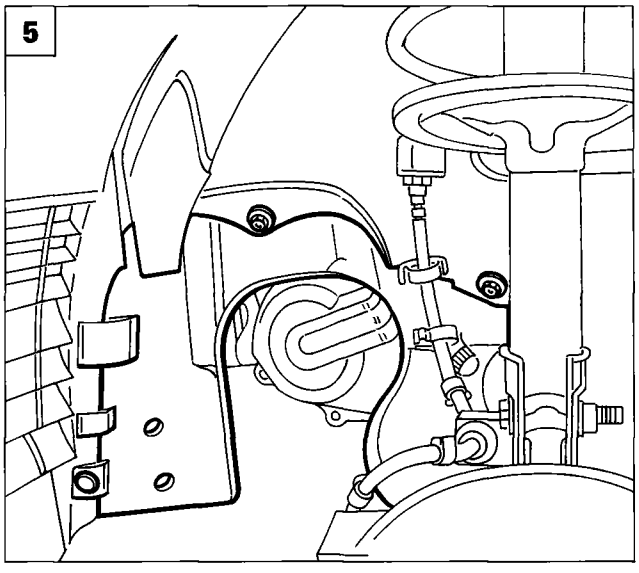

P4F02EX01

Copyright Fiat Auto

10.

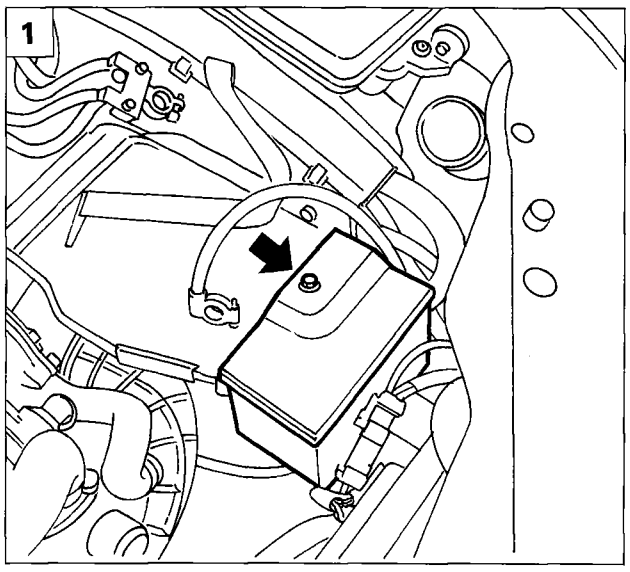

P4F03EX03

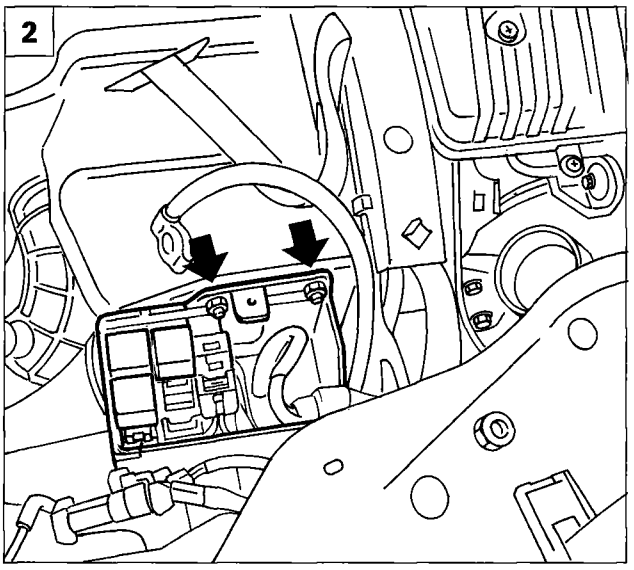

P4F03EX04

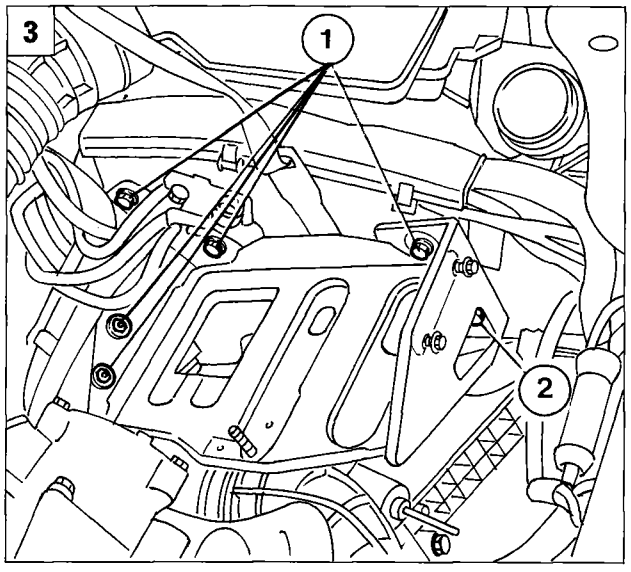

P4F03EX05

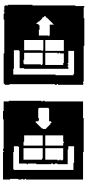

1. Unscrew relay box cover bolt shown.
2. Unscrew the nuts shown and place the relay box to one side in the engine bay
3. Unscrew bolts (1), loosen bolt (2), then remove the battery tray.
4. Loosen clips (1), remove the air line section shown and disconnect electrical connections (2).

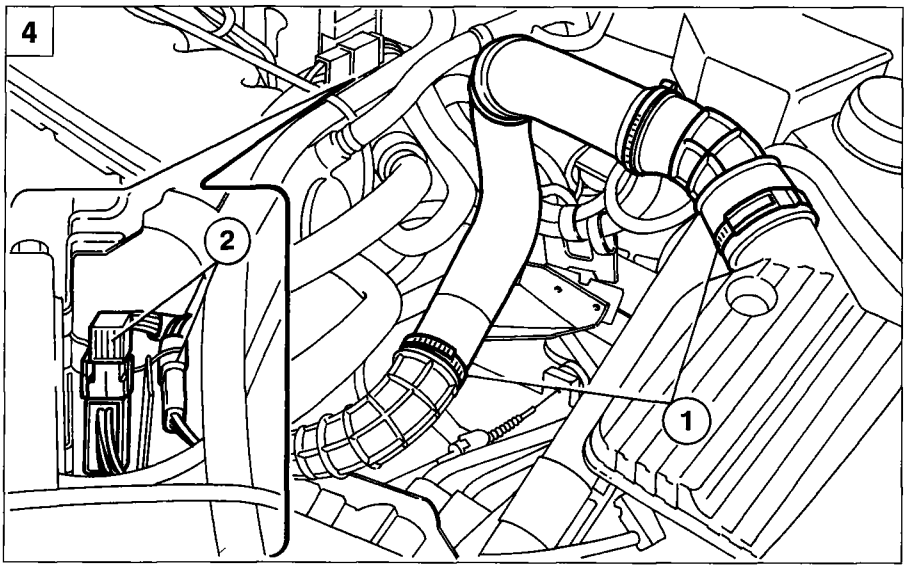

P4F02GX01

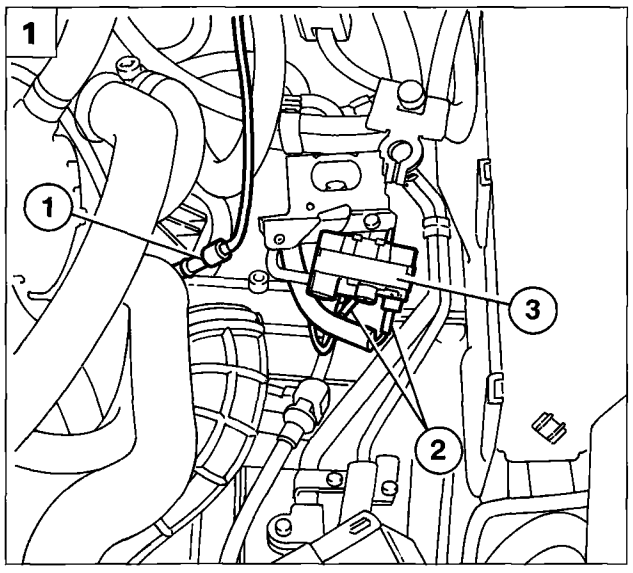

P4F03GX01

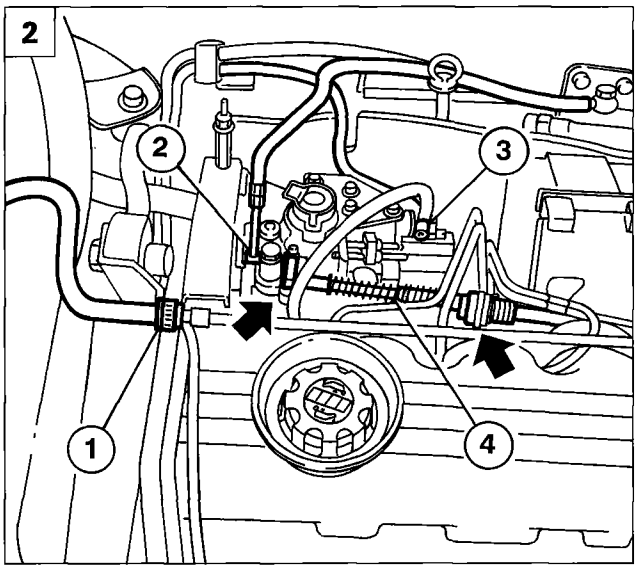

P4F03GX02

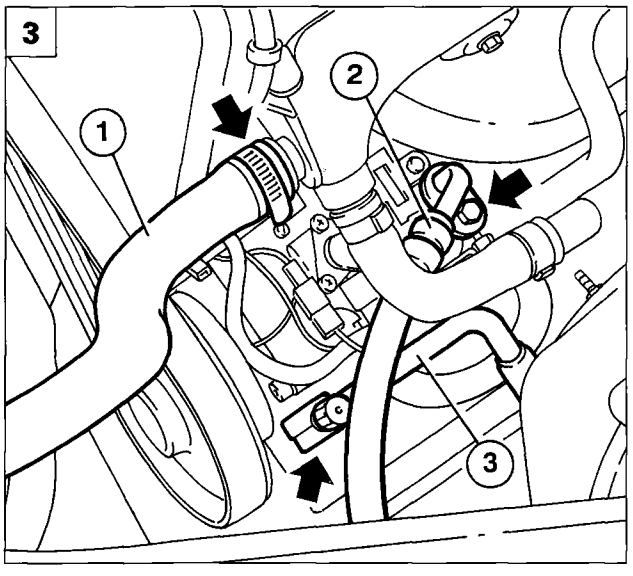

P4F03GX03

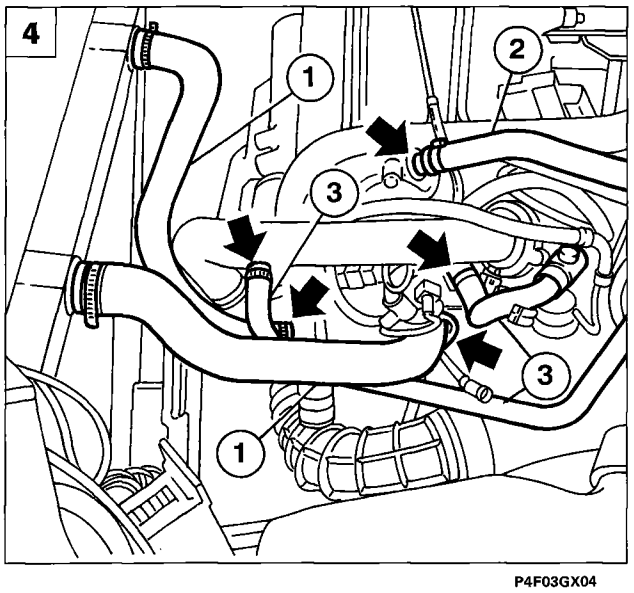

P4F03GX04

1. Disconnect electrical connection (1) for the coolant temperature sensor and electrical connections (2) for the glow plug control unit (3).

2. Position a container to collect the coolant, then disconnect line (1) and drain the coolant from the system. Disconnect the fuel outlet lines (2) and inlet lines (3) from the injection pump. Disconnect the accelerator control cable (4) from the points indicated and place to one side.

3. Undo the coolant line (1) at the arrowed points and disconnect R134a fluid outlet lines (2) and inlet lines (3) from the compressor for vehicles with air conditioning.

4. Disconnect coolant inlet and outlet lines from the engine radiator (1) at the points shown. Disconnect outlet line (2) from the servo brake vacuum pump and lines (3) from the heater unit.

Copyright Fiat Auto

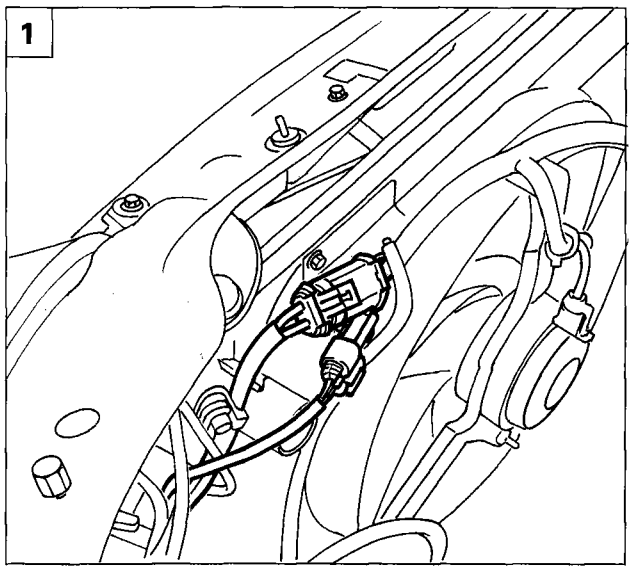

P4F04EX05

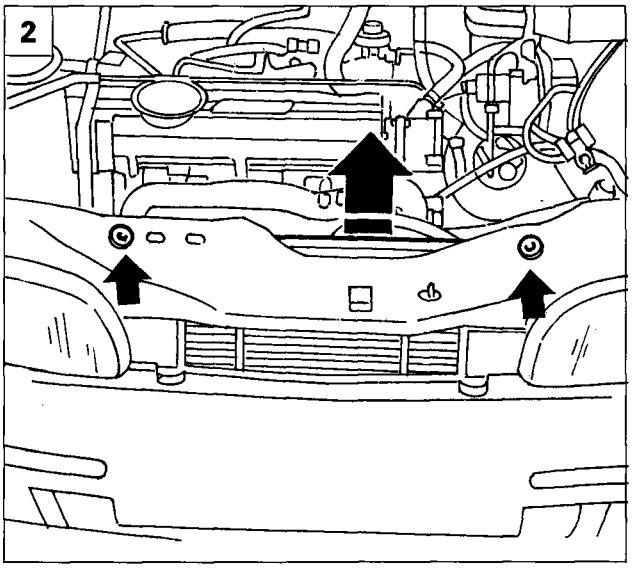

P4F05EX01

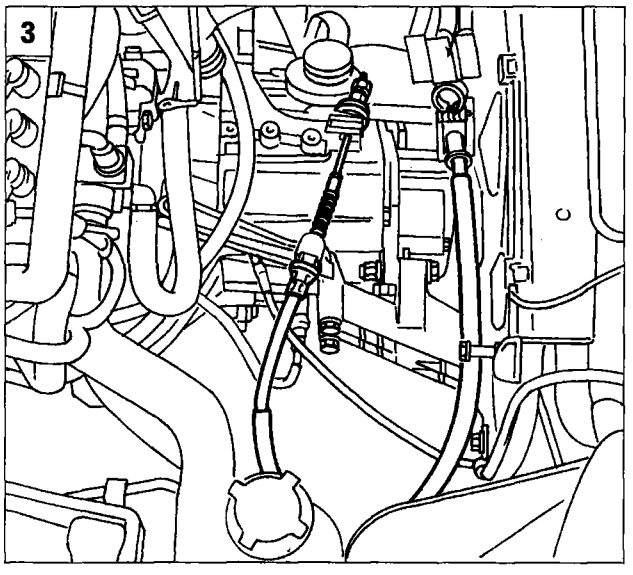

P4F05EX02

1. Disconnect both electrical connections supplying the engine cooling fan.
2. Unscrew both bolts retaining the radiator to the body, then remove the radiator - fan unit assembly.
3. Disconnect the clutch release cable from the anchorages on the gearbox.
4. Disconnect the speed selection and engagement cables at the points indicated. Take care not to damage the cables when removing from the head.
5. Remove the reaction rod with mount by undoing the retaining bolts shown

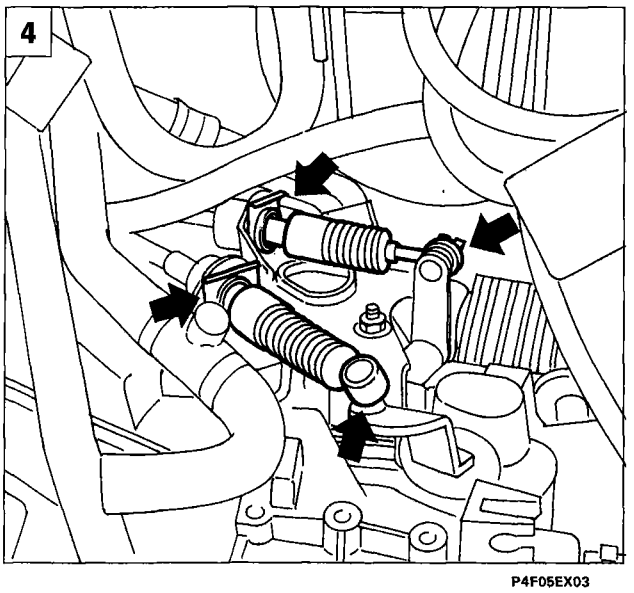

P4F05EX03

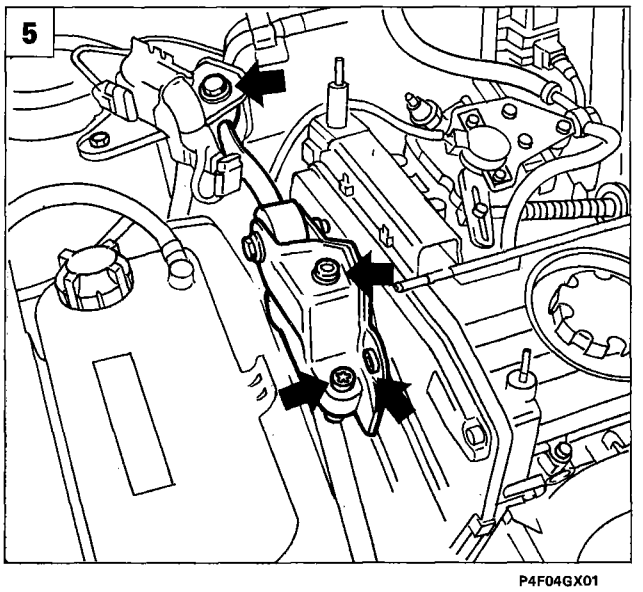

P4F04GX01

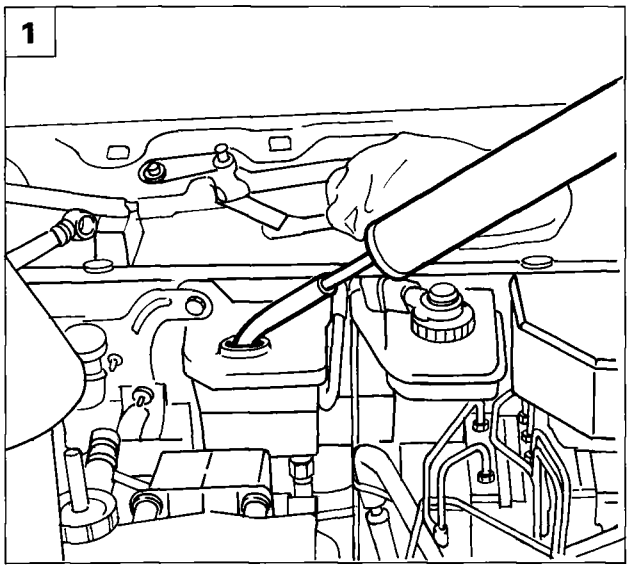

P4F04FX03

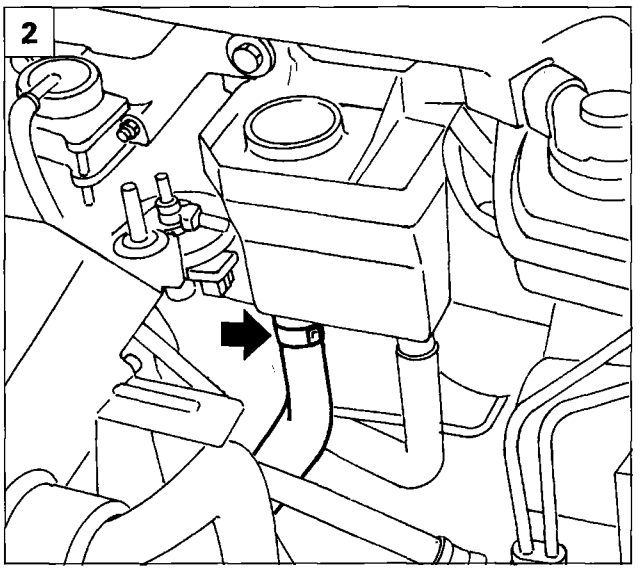

P4F05GX01

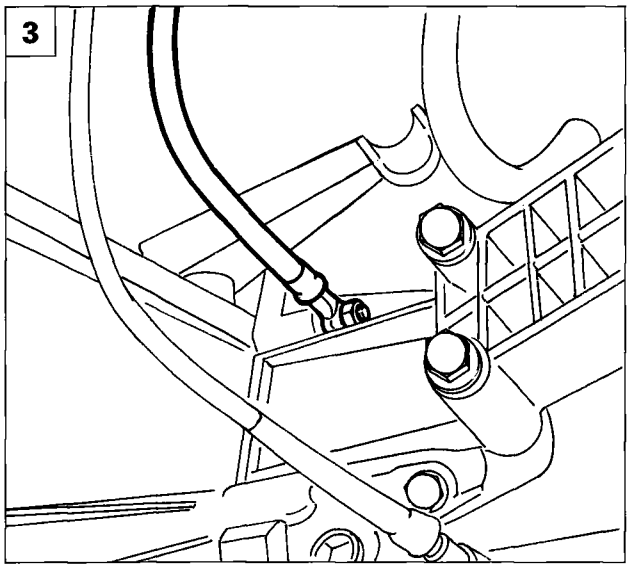

P4F07EX03

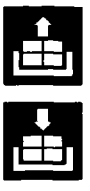

1. Drain the fluid from the power steering pump using appropriate tools to recover the fluid.
2. Disconnect the oil delivery line to the power steering pump from the reservoir.
3. Disconnect the earth lead from the gearbox.
4. Remove the front exhaust pipe section from the manifold and the two vibration-proof brackets.
5. Disconnect the front exhaust pipe section from the catalytic converter, then remove from the vehicle.

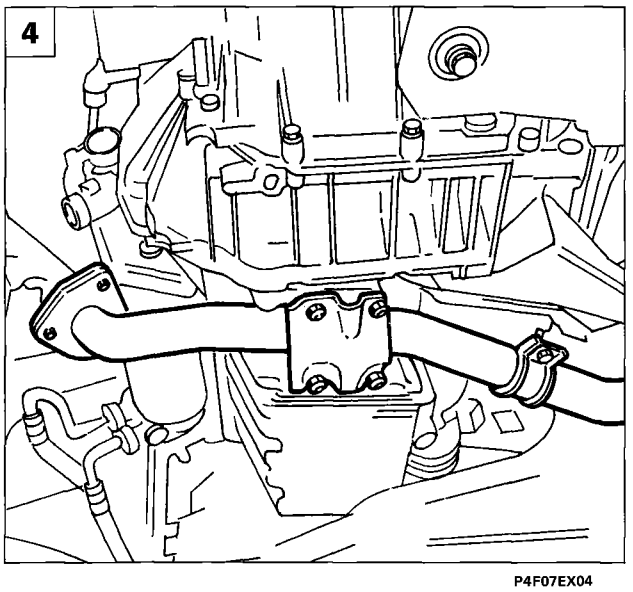

P4F07EX04

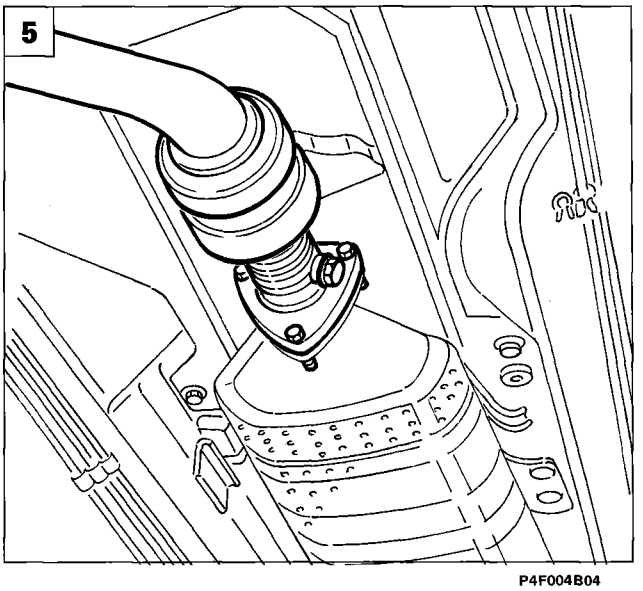

P4F004B04

10.

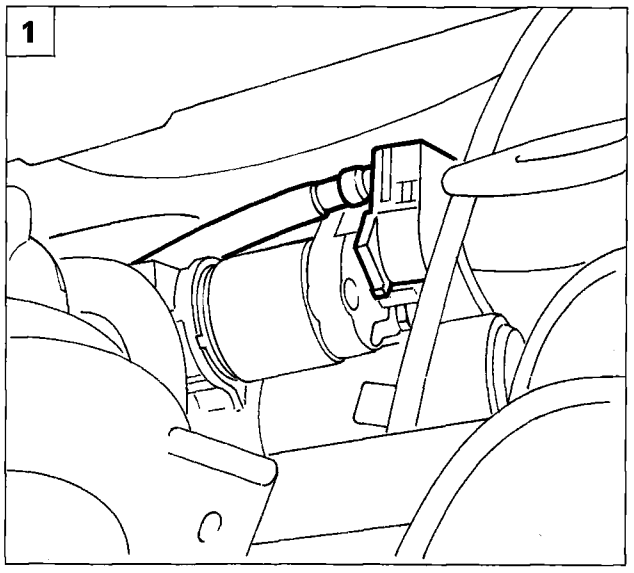

P4F08EX01

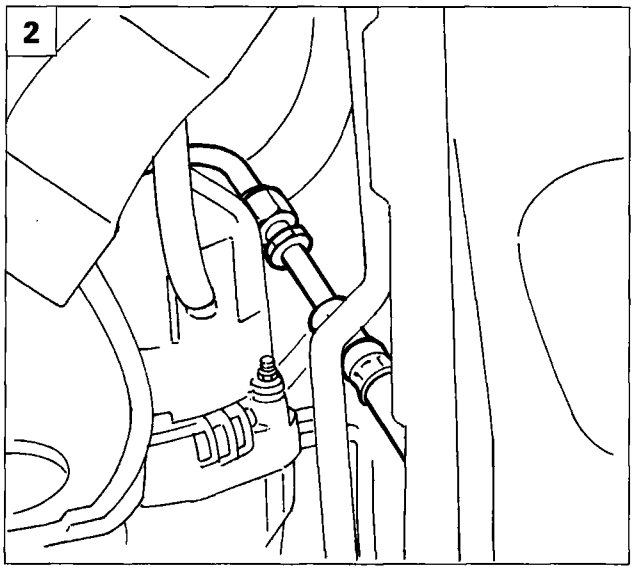

P4F08EX02

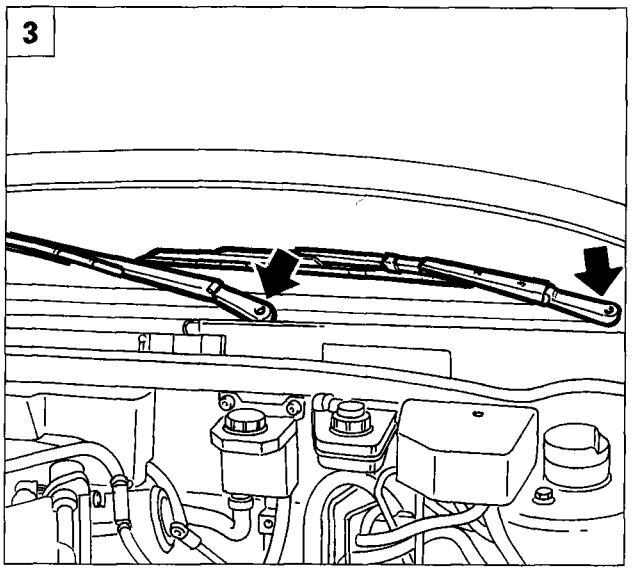

P4F54AB02

1. Disconnect the supply lead from the starter motor.
2. Disconnect the return fitting from the power steering pump.
3. Remove the wiper arms by prising off the plastic protection and unscrewing the nut underneath.
4. Remove the pollen filter plastic protection.
5. Unscrew the nuts retaining the engine wiring support bracket to the body.

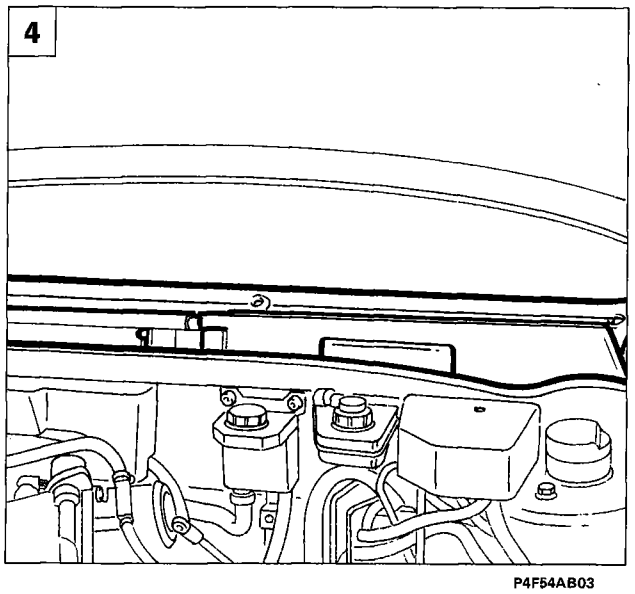

P4F54AB03

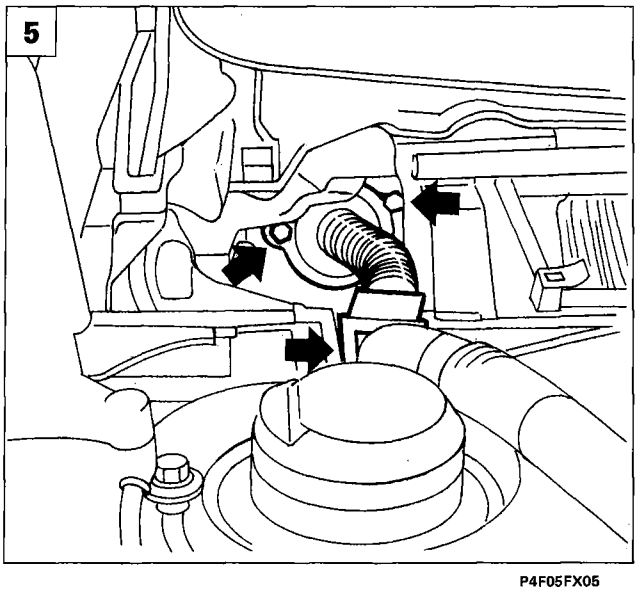

P4F05FX05

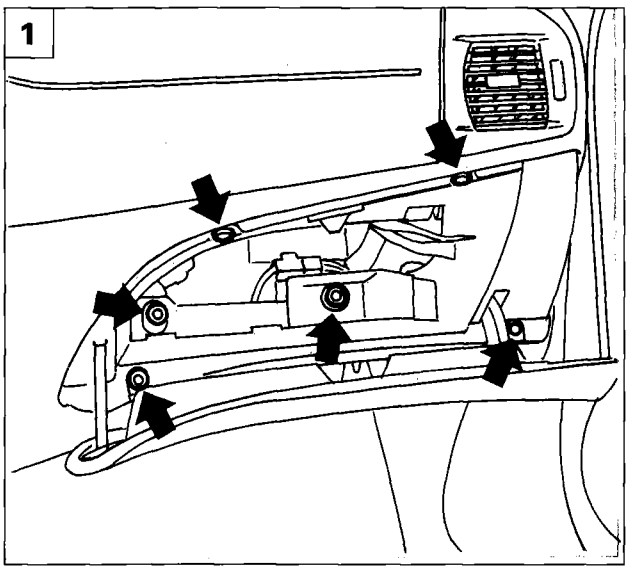

P4F05FX03

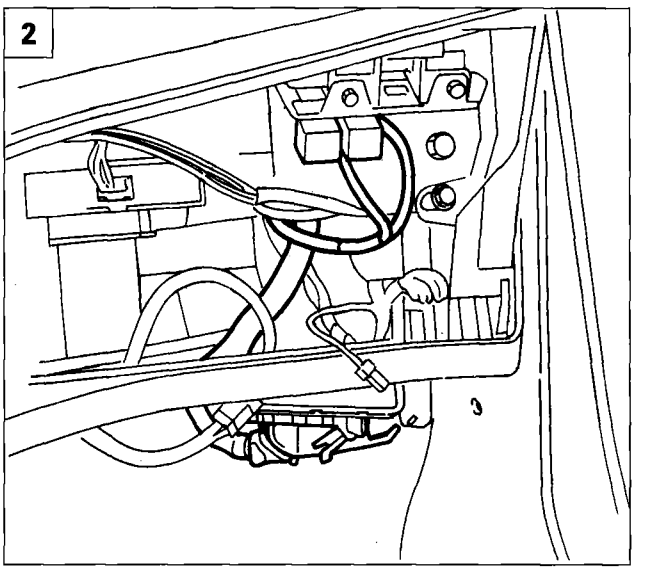

P4F05FX04

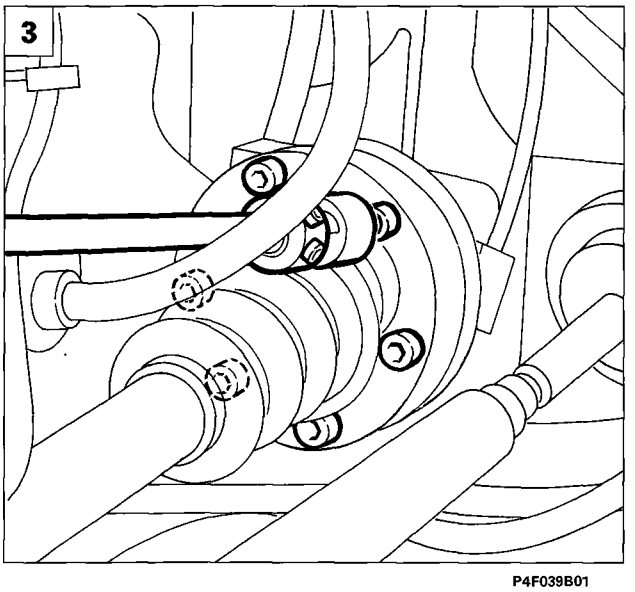

P4F039B01

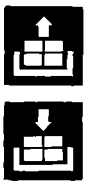

1. Working from inside the vehicle, remove the glove compartment by unscrewing the retaining screws shown.
2. Disconnect the connector from the exhaust gas recirculation (EGR) system and withdraw the relay shown from its bracket. Then withdraw the engine wiring assembly and secure to the power unit.
3. Disconnect the half-axles by undoing the bolts securing the constant velocity joint to the gearbox flange.
4. Unscrew bolt (1) and loosen bolt (2) retaining the suspension pillar. Then turn the pillar towards the outside and release the drive shaft from the fitting on the differential.

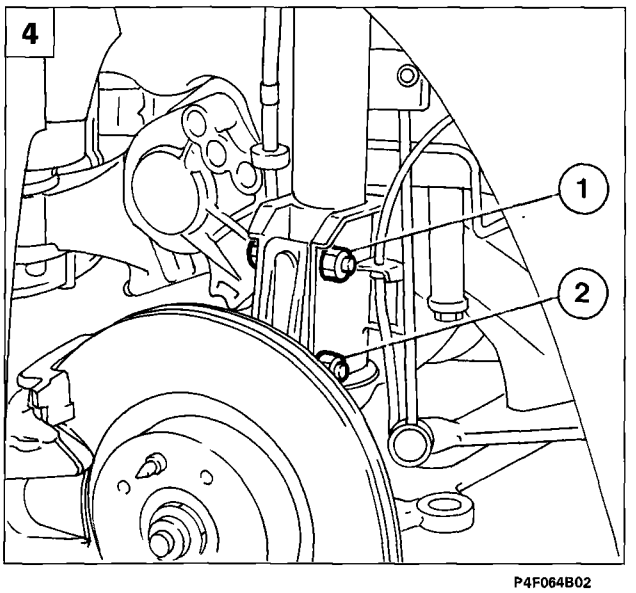

P4F064B02

10.

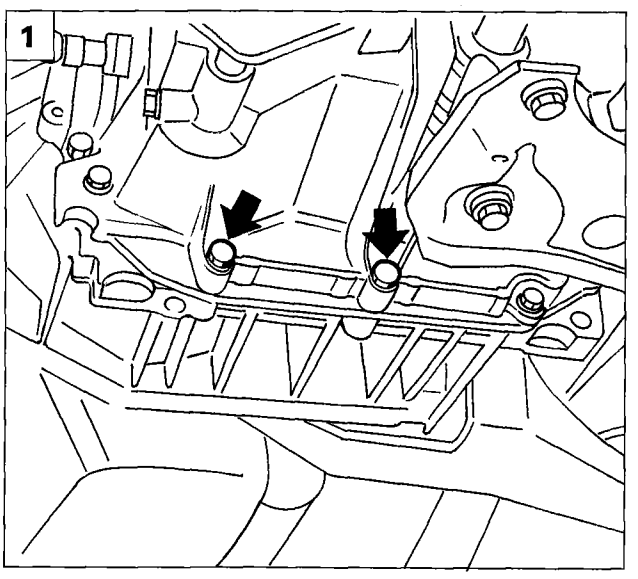

P4F06BX05

1. Remove the bolts shown from the bell housing in order to allow the tool used for removal of the power unit to be positioned.

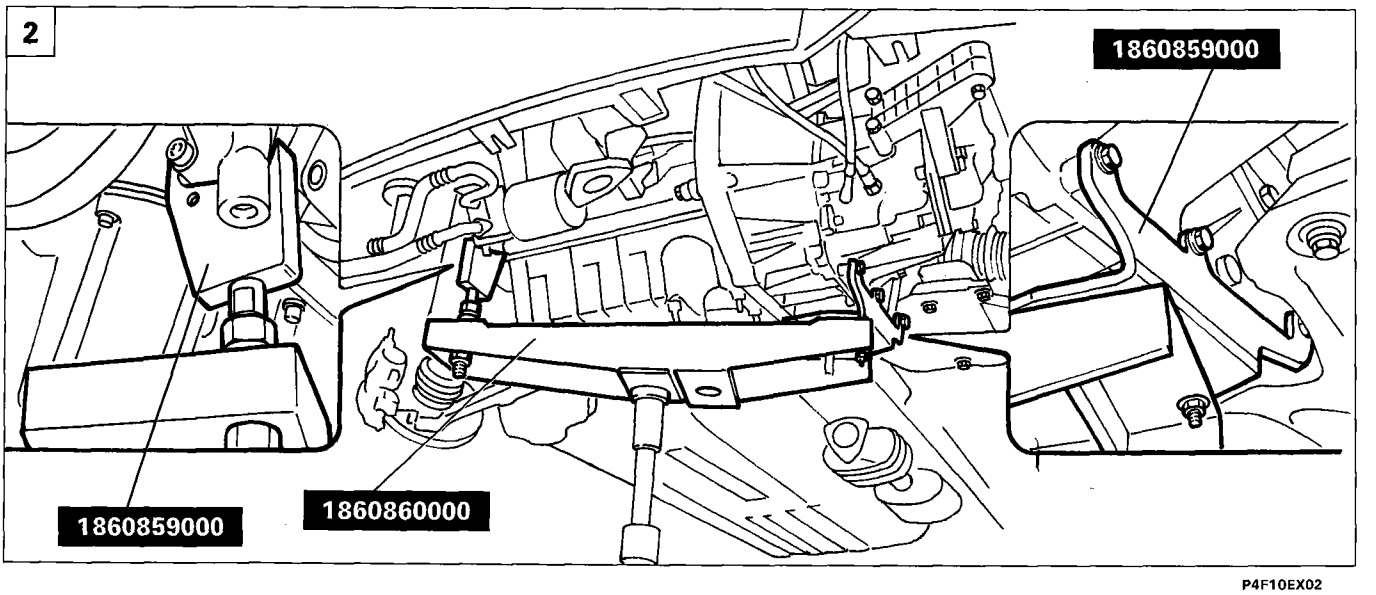

P4F10EX02

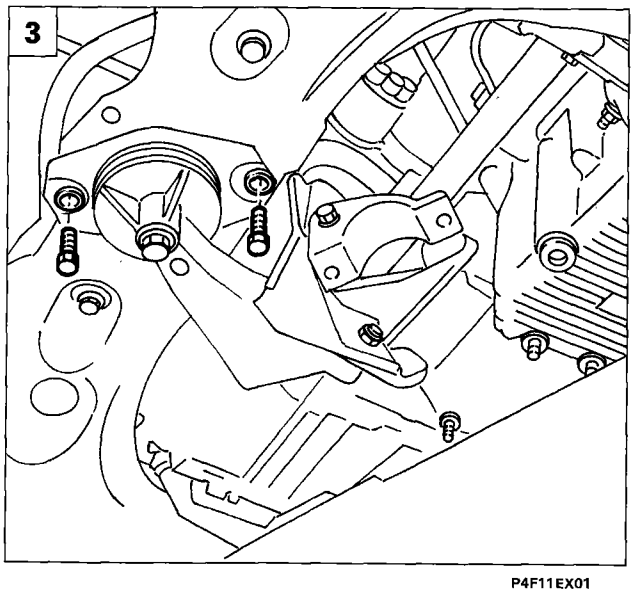

P4F11EX01

2. Position enging mount tool 1860860000 on the hydraulic jack and secure to the power unit using the tools shown.

The hydraulic jack must have a capacity of at least 1000 kg and be high enough to allow the power unit to be removed from underneath. It will therefore be necessary to consider the lift's maximum height setting and the mimimum height setting of the hydraulic jack.

3. Remove the central power unit mount by unscrewing the bolts retaining it to the body.

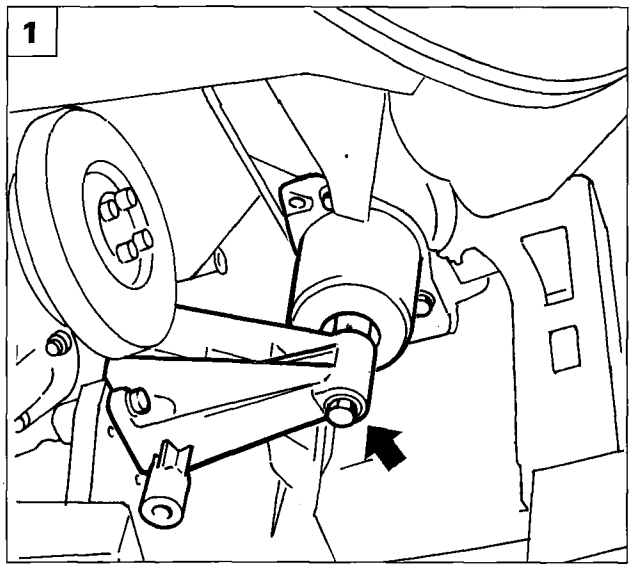

P4F11EX02

1. Remove the timing end engine mount by unscrewing the central bolt.
2. Remove the gearbox end engine mount by unscrewing the retaining bolts shown.
3. Lower the hydraulic jack and remove the power unit from beneath the vehicle.

Lower the hydraulic jack gradually and check the power unit is properly positioned and balanced on the mount.

- Position the power unit on the board using a hydraulic hoist.

Use a hydraulic hoist to move the power unit, after releasing from its mount.

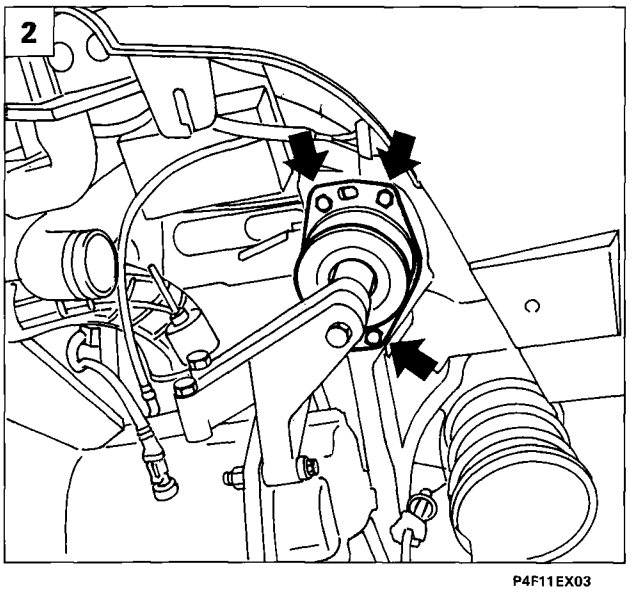

P4F11EX03

NOTE *To refit the power unit, carry out removal instructions in reverse.*

- *Prepare the engine bay to fit the power unit. Take care to position all electrical leads, pipes etc. so that they do not become caught up during assembly;*

- *Take care to avoid damaging individual components when fitting the power unit;*

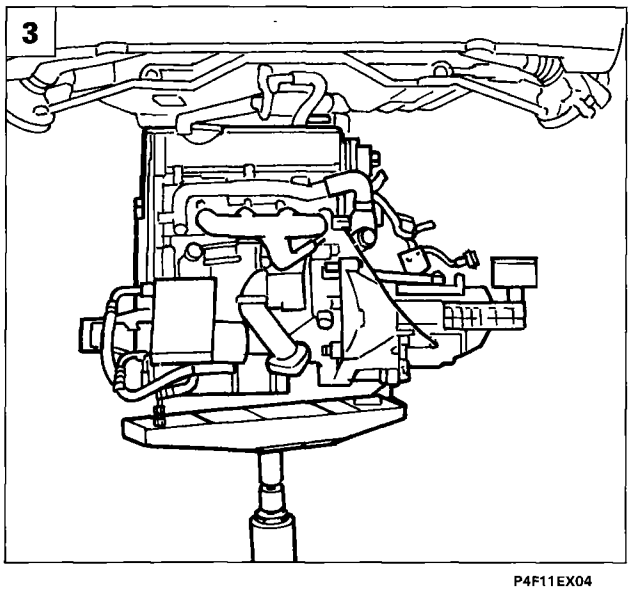

P4F11EX04

- *When fitting the coolant lines, align the groove on the rubber hose with the ridge on the associated rigid coupling sleeve. When refilling the engine cooling circuit, refer to the instructions for the 1910 TD 100 engine given in section 10 of publication no. 506.763/02.*

Ensure that the power unit mounting points are properly secured.

Clutch pedal height.

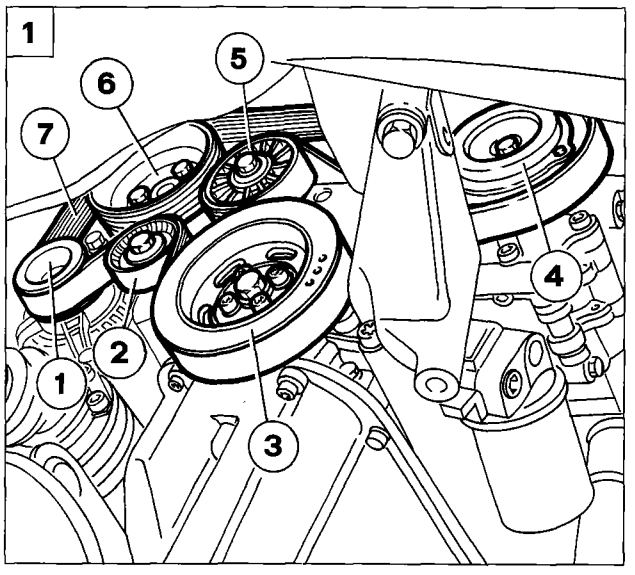

P4F10GX01

REMOVING - REFITTING AUXILIARY COMPONENT BELT

1. View of auxiliary belt fitted to the vehicle:

   1. Alternator
   2. Automatic tensioner
   3. Crankshaft pulley
   4. Air conditioner compressor pulley
   5. Fixed tensioner
   6. Power steering pump pulley
   7. Auxiliary component belt

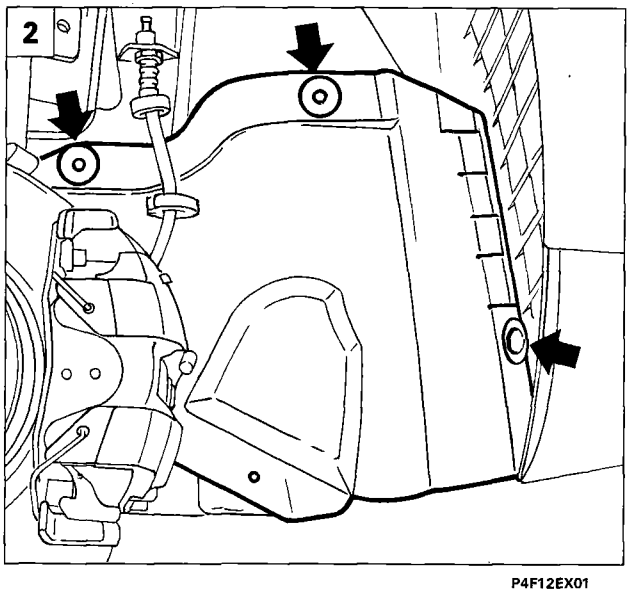

P4F12EX01

Removing

Position the vehicle on a lift, remove the right front wheel, disconnect the battery negative terminal and proceed as follows.

2. Remove the wheel arch lining by unscrewing the retaining bolts shown and use tool 1870077000 to undo the stud shown.

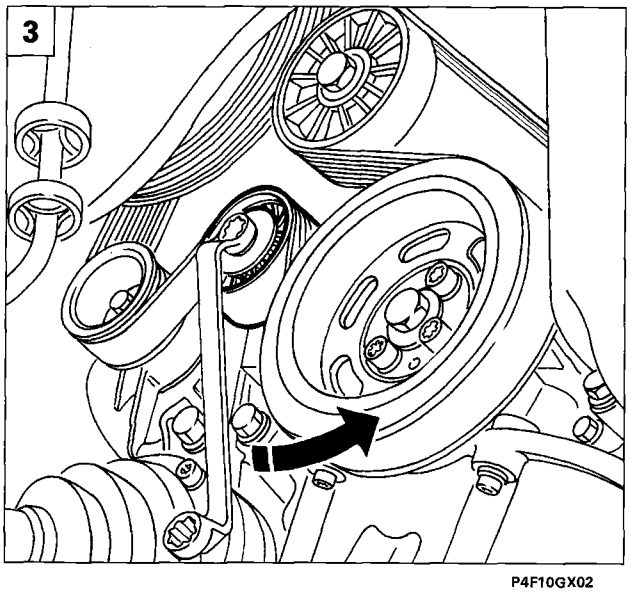

P4F10GX02

3. Turn the tensioner in the arrowed direction and release belt tension, then remove belt.

Check belt for cracks, cuts, surface wear (smooth, shiny patches), dry or hard patches which could lead to a loss of grip. Replace the belt if any of the above defects are found.

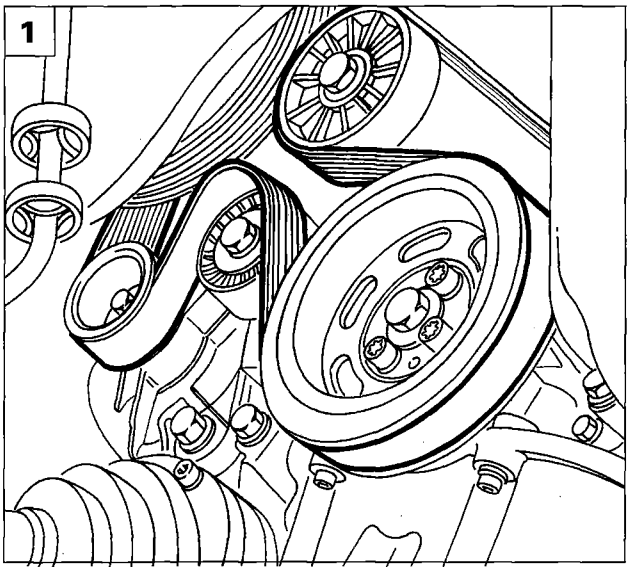

P4F11GX01

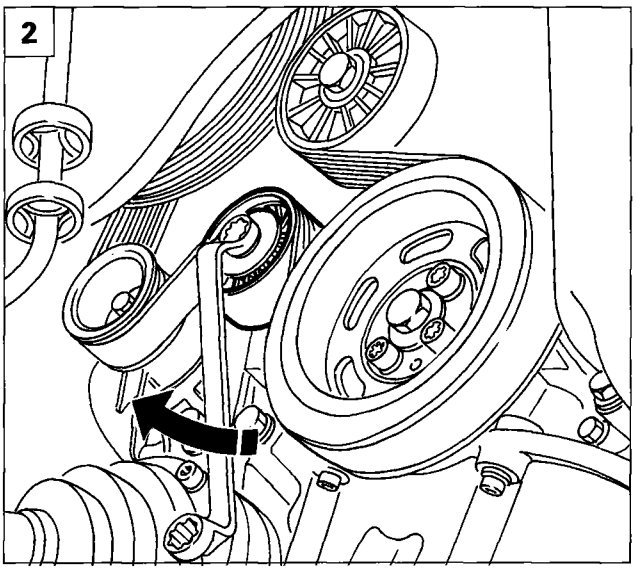

P4F11GX02

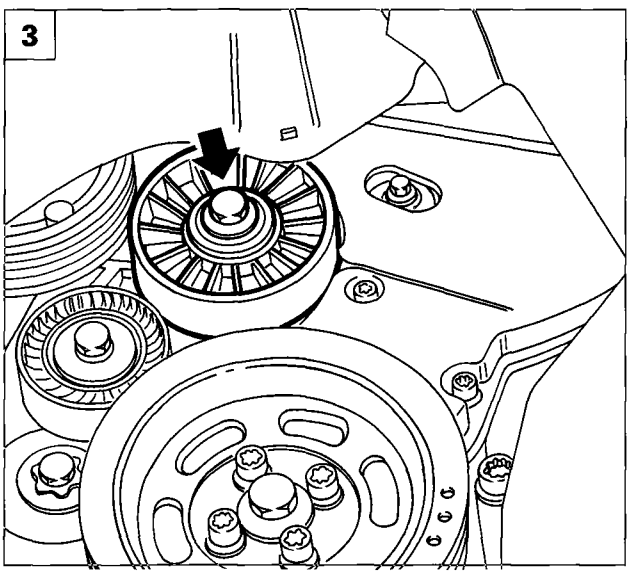

P4F11GX03

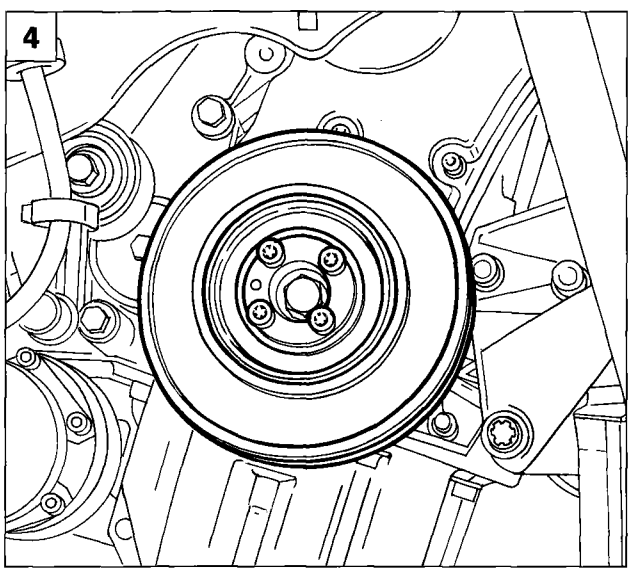

P4F14EX01

Refitting

1. Fit a new belt as shown in the figure.

Prevent the new belt coming into contact with oil or solvent which could affect the elasticity of the rubber and lead to a loss of grip.

2. Return the tensioner to the position shown in the figure. The preloaded tensioner spring will ensure the belt is correctly tensioned once the crankshaft has been turned a few times.

REPLACING TIMING BELT

Removing

Before removing the timing belt, remove the auxiliary belt as described previously.

3. Remove the lower power unit guard as described in the power unit removal procedure, then remove the auxiliary belt fixed pulley to allow removal of the timing belt guard.

4. Remove the auxiliary drive pulley from the crankshaft.

Copyright Fiat Auto

10.

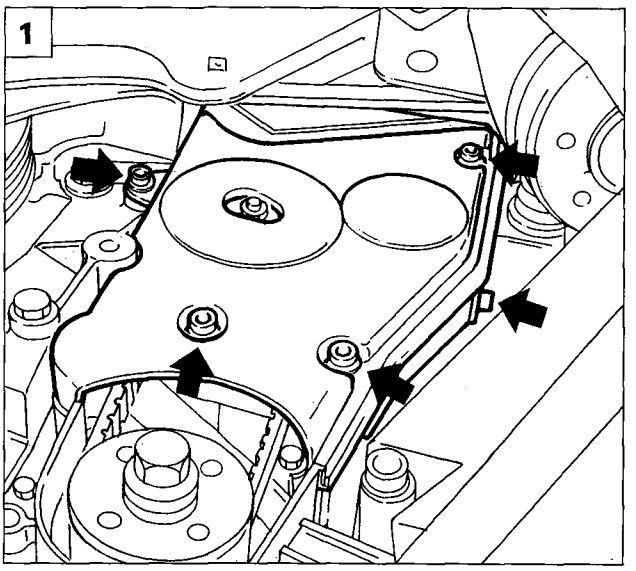

P4F14EX02

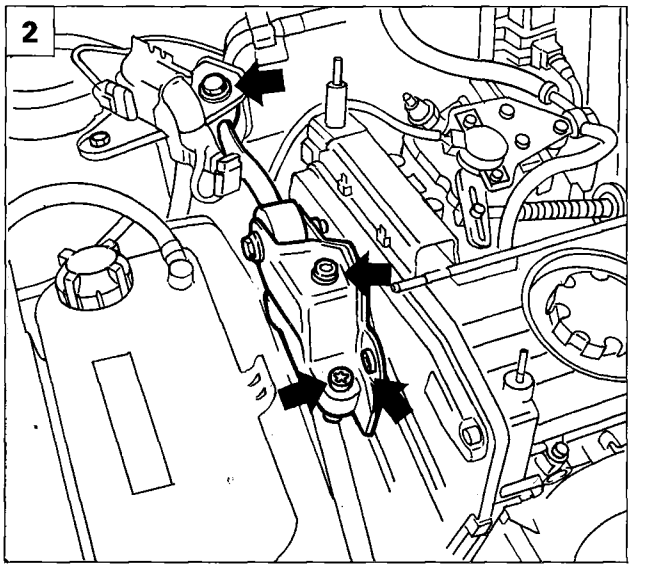

P4F04GX01

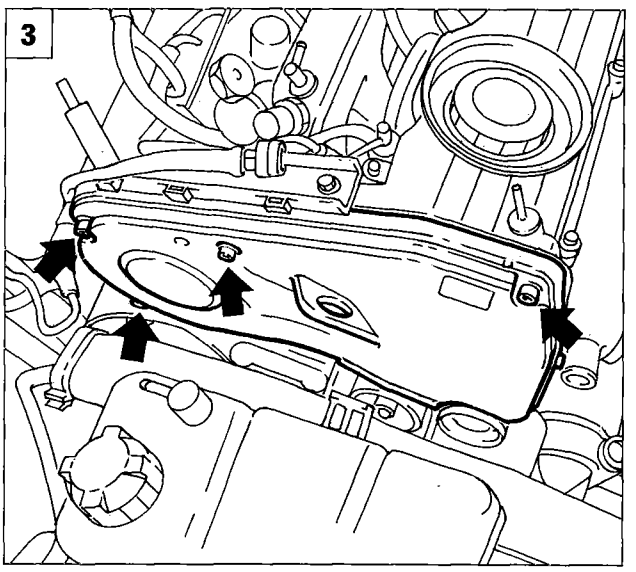

P4F14EX04

1. Remove the lower timing belt guard.
2. Unscrew the retaining bolts shown and remove the reaction rod and bracket.
3. Remove the upper timing belt guard.
4. Check that the injection pump is correctly set by checking that references (1) and (2) shown are aligned. Then lock pulley in the correct position by fitting service bolts (3) in the holes on the pulley.
5. Loosen the tensioner nut shown, release belt tension and then remove belt.

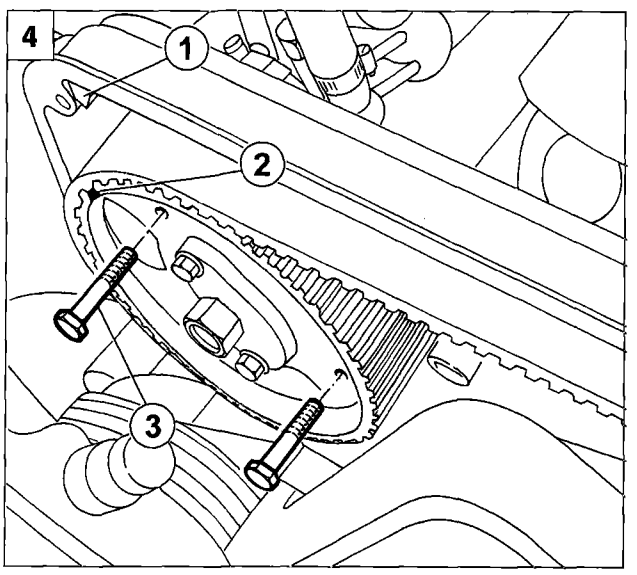

P4F12GX01

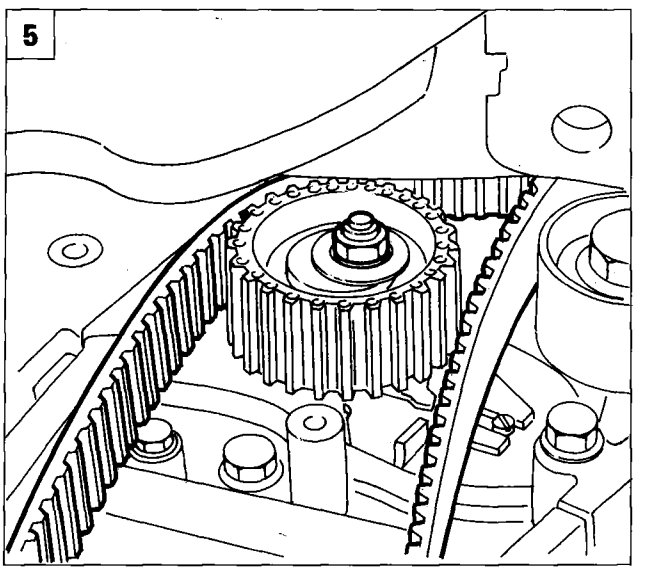

P4F17FX01

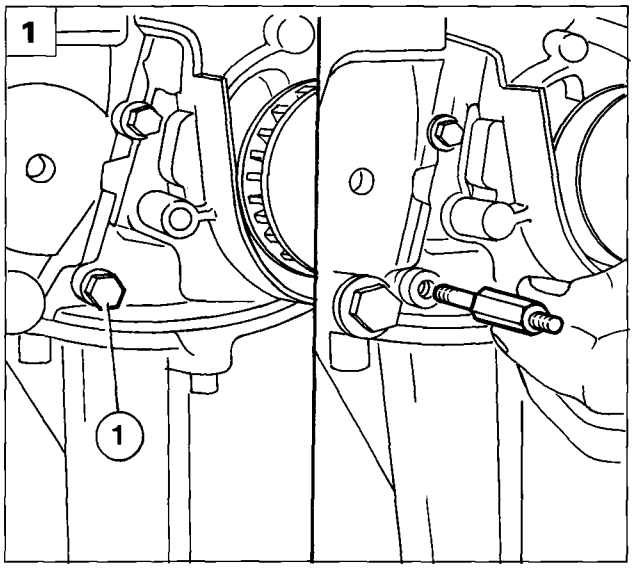

P4F15EX01

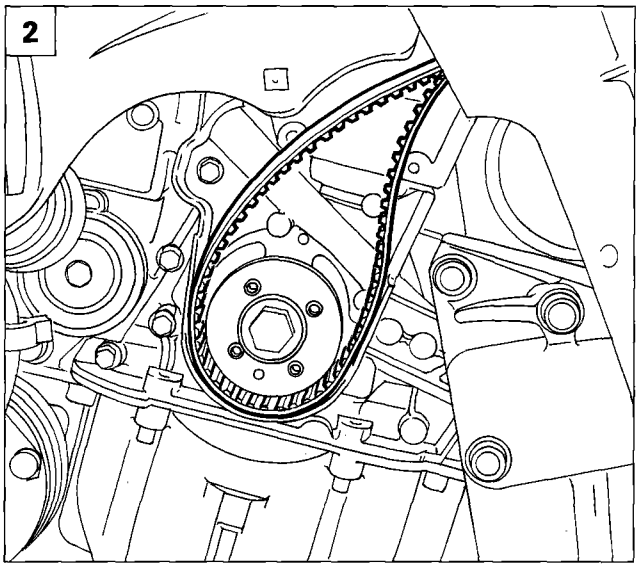

P4F15EX02

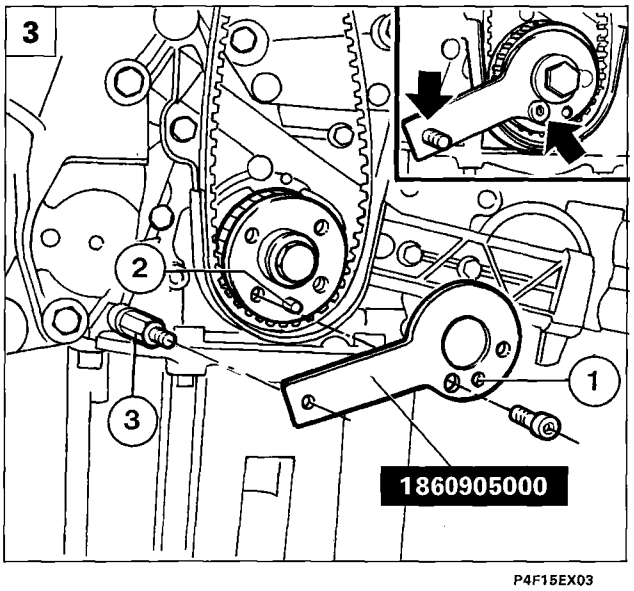

P4F15EX03

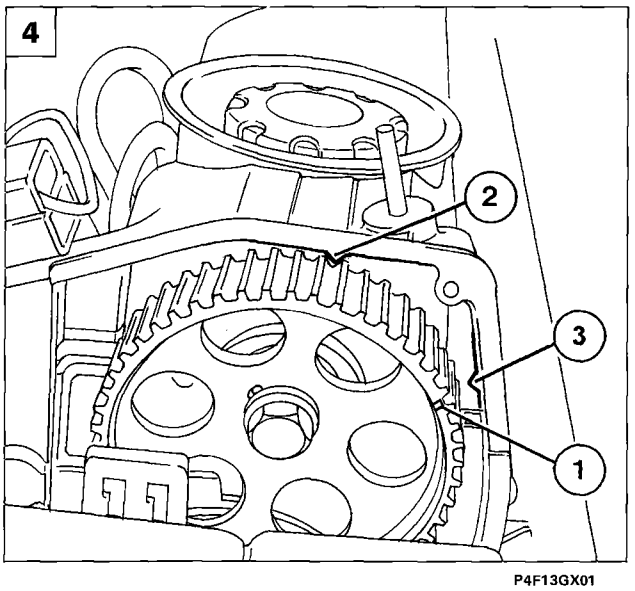

P4F13GX01

Refitting and tensioning timing belt

1. Remove oil pump retaining bolt (1) shown. Position the pin of tool 1860905000 in place of the bolt.
2. Fit the timing belt onto the crankshaft gear.
3. Position tool 1860905000 on the crankshaft gear and pin (3); turn the crankshaft through small movements until dowel (2) fits into hole (1). The first cylinder is set to TDC in this position.
4. Use tool 1860831000 to turn the camshaft pulley to achieve the following alignments:
   - up to engine no. 416499
     notch (1) on the pulley should be shifted by 7 teeth (counting clockwise) from notch (2) on the cam cover.
   - from engine no. 416450
     notch (1) on the pulley should be aligned with notch (3) on the cam cover.

NOTE *Timing is correctly adjusted when, with piston no. 1 at TDC, notch (1) is in the position shown in the figure (for engines up to no. 416449, exact notch position may differ by ± 3° (engine) or ½ tooth).*

10.

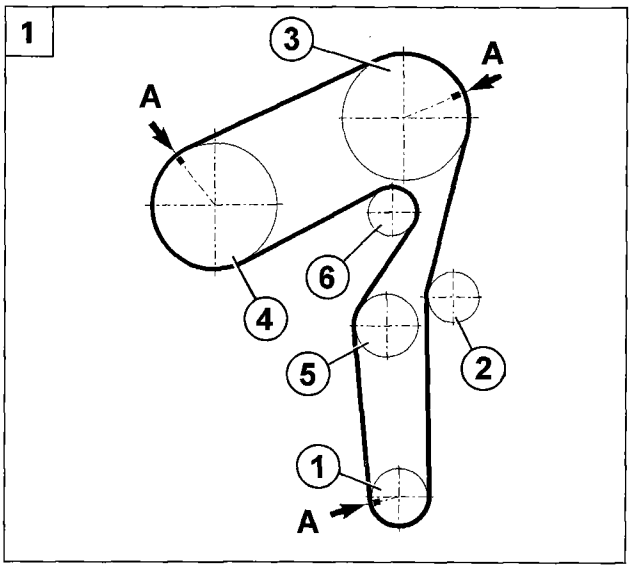

P4F14GX01

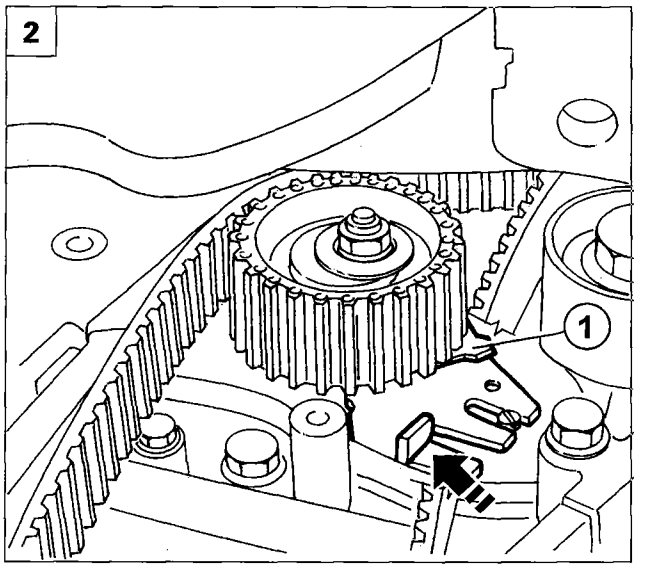

P4F14GX02

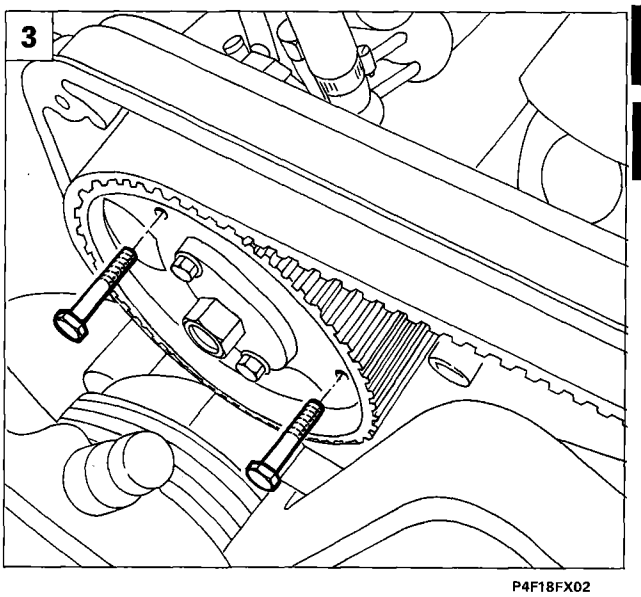

P4F18FX02

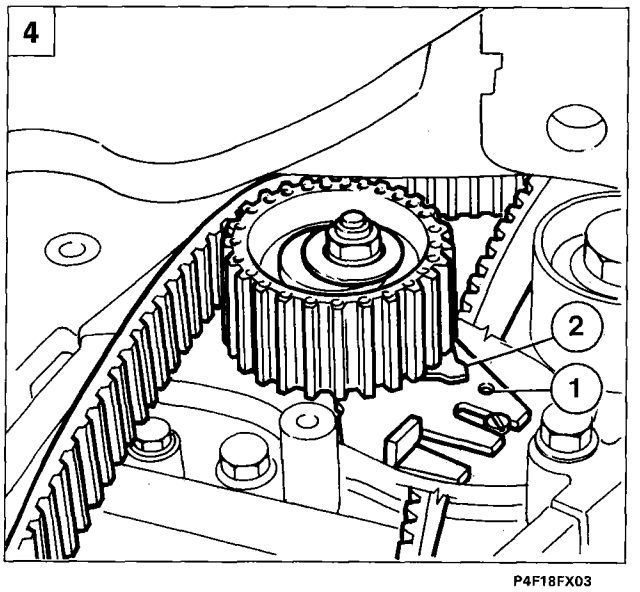

P4F18FX03

1. Finish fitting the timing belt by installing parts in the following order:

   1. Crankshaft gear
   2. Fixed guide pulley
   3. Timing pulley
   4. Injection pump pulley
   5. Automatic tensioner
   6. Coolant pump

For all pre- and post-modification engines, the new belt may be fitted and timing adjusted by aligning the transverse notches (A) on the back of the timing belt with the reference marks on the pulleys.

NOTE *Fit the belt so that the arrow faces in the direction of engine rotation.*

2. Apply force at the point indicated on the automatic tensioner and move the mobile tensioner indicator (1) to a position of maximum tension (facing up), then tighten the belt tensioner nut.
3. Release the injection pump drive pulley by unscrewing the bolts positioned previously.
4. Turn the crankshaft through two turns in its normal direction of rotation, release the tensioner retaining nut and align the fixed indicator (1) on the tensioner mount with mobile indicator (2) on the belt tensioner. Screw in the tensioner nut and then tighten to the specified torque. Refit the parts removed previously by following removal instructions in reverse order.

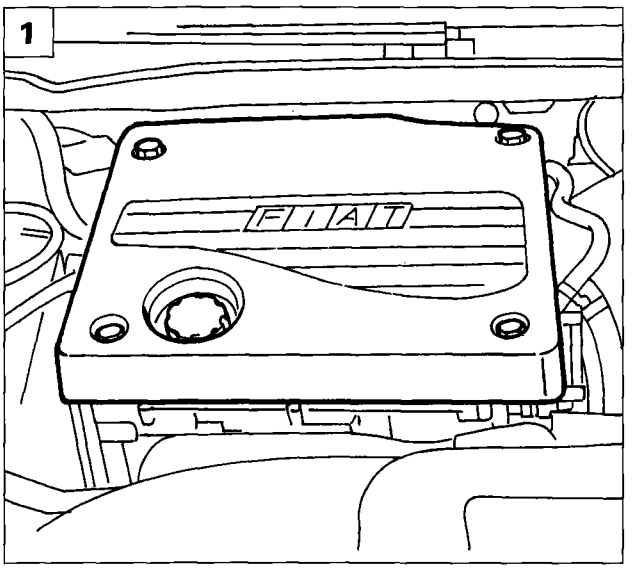

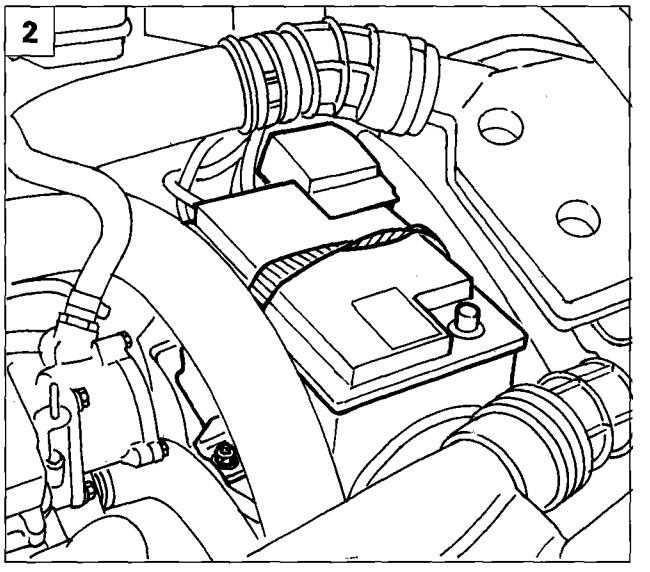

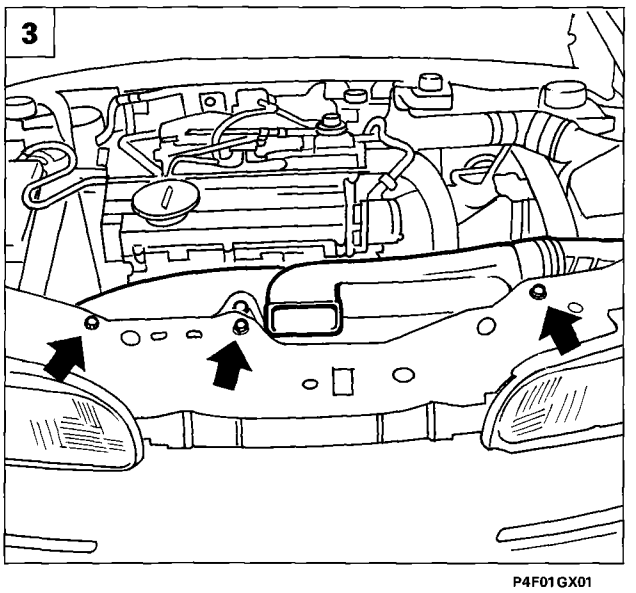

P4F01GX01

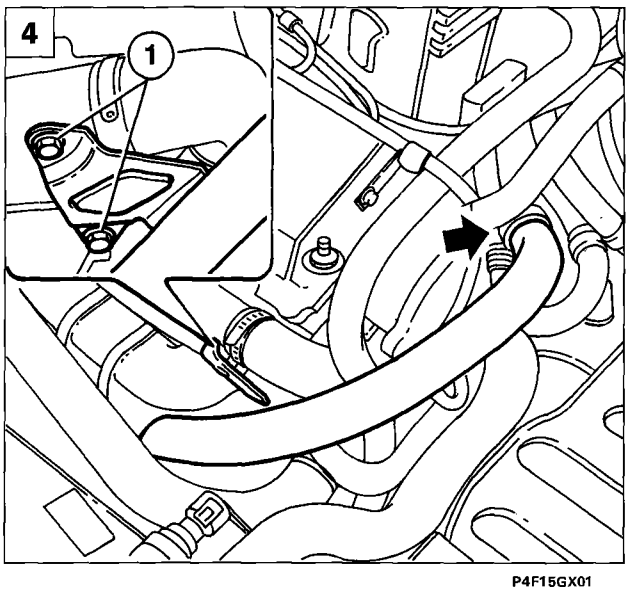

P4F15GX01

REMOVING CYLINDER HEAD

Place the vehicle on a lift, remove the front wheels, disconnect the battery negative terminal and then proceed as follows.

1. Remove the upper cylinder head protection by unscrewing the retaining nuts.

2. Disconnect the battery positive terminal (1), unscrew nut (2), raise bracket (3) and then remove the battery.

3. Unscrew the retaining bolts shown and remove the air intake indicated.

4. Loosen the arrowed clip and unscrew both bolts (1) retaining the air intake sleeve.

Copyright Fiat Auto

10.

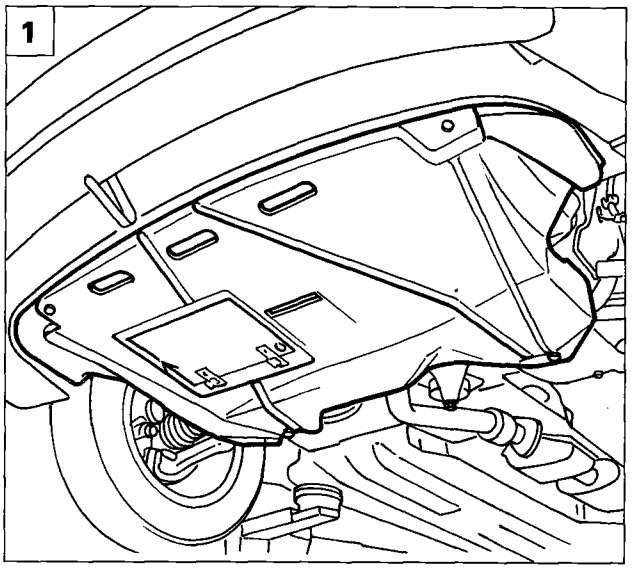

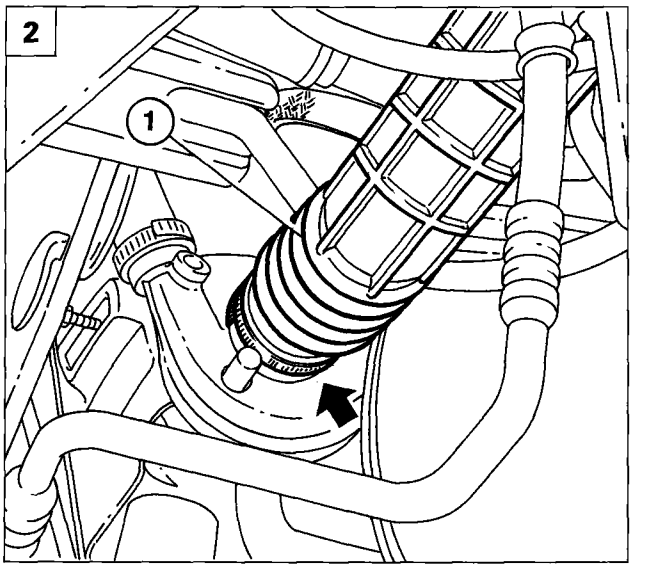

P4F16GX01

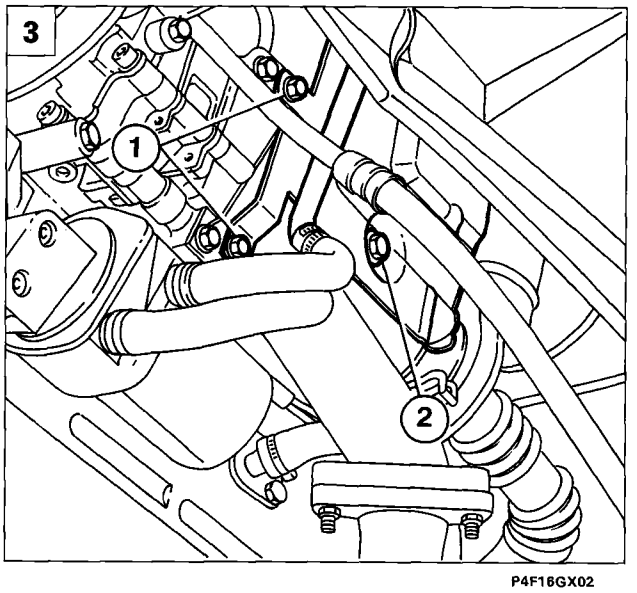

P4F16GX02

1. Raise the lift and remove the lower engine bay protection.
2. Loosen the clip indicated and remove the air intake sleeve (1).
3. Unscrew bolts (1) retaining the rigid coolant inlet and outlet lines to the intercooler, then unscrew the lower heat guard retaining bolt (2).
4. Lower the lift, position a container to collect the coolant, then loosen the clips shown, disconnect the pipes and drain the coolant.
5. Unscrew the retaining bolts shown and release the exhaust pipe from the vibration-proof bracket shown.

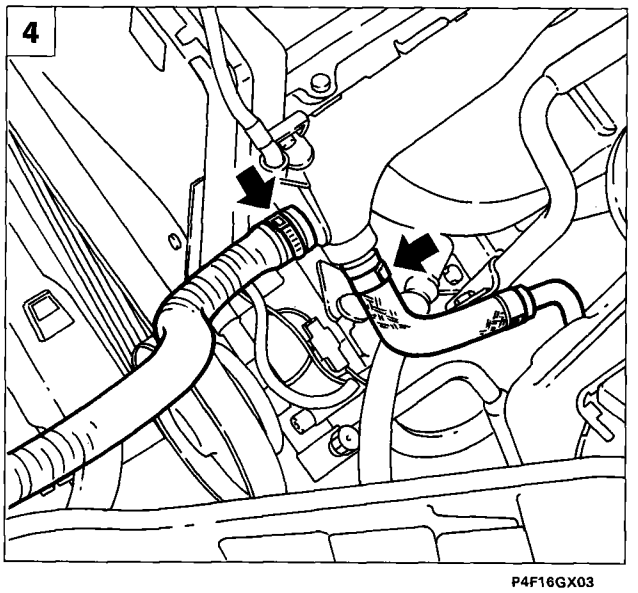

P4F16GX03

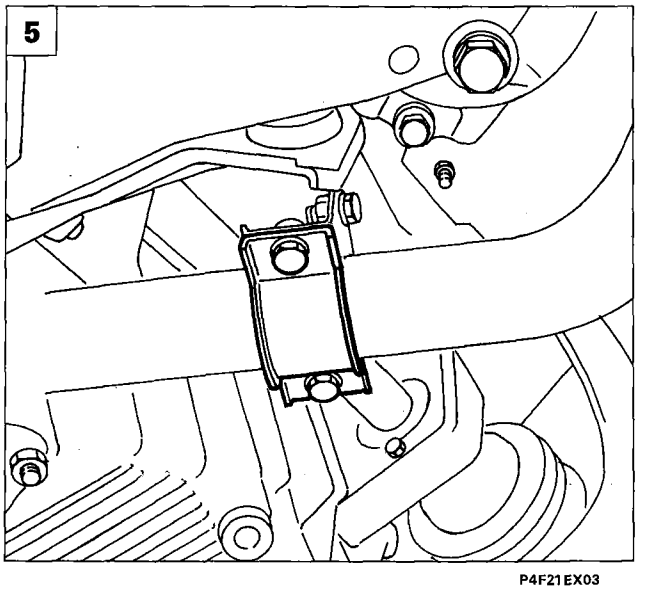

P4F21EX03

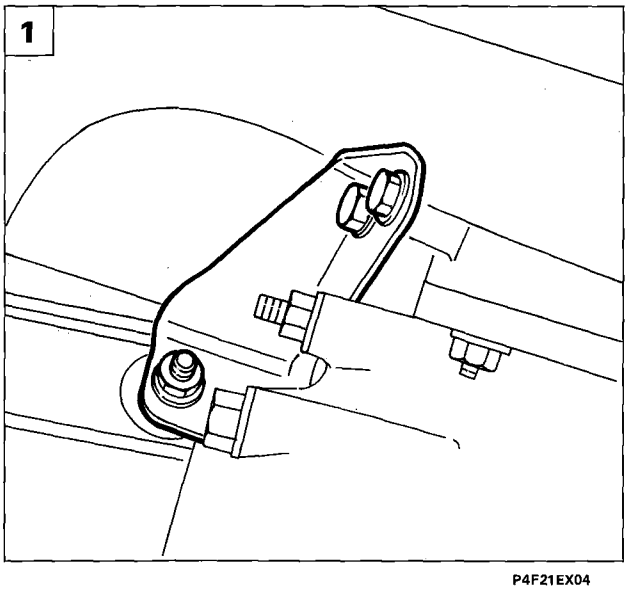

P4F21EX04

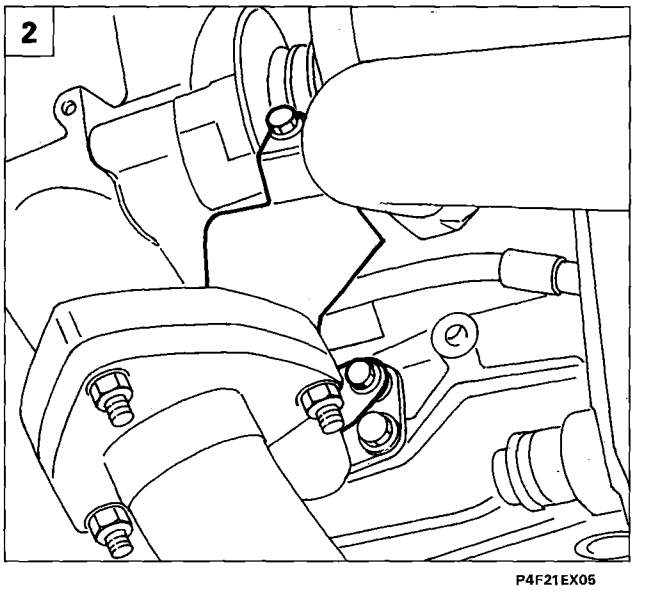

P4F21EX05

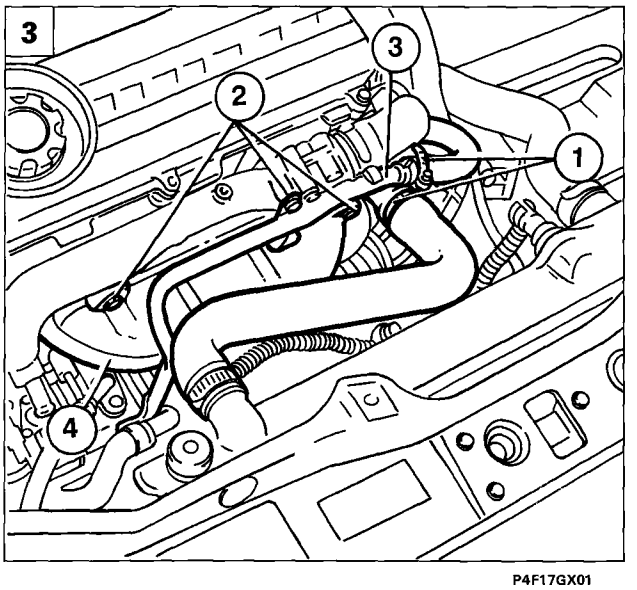

P4F17GX01

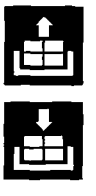

1.2. Remove both reinforced brackets holding the turbine to the crankcase.

3. Loosen clip (1) and remove pipes. Then unscrew bolts (2), move rigid pipe (3) to one side and remove heat shield (4).

4. Unscrew both retaining screws and remove the bulkhead shown.

5. Loosen the arrowed clips and disconnect the brake servo vacuum line (1) and blow-by gas recirculation line (2).

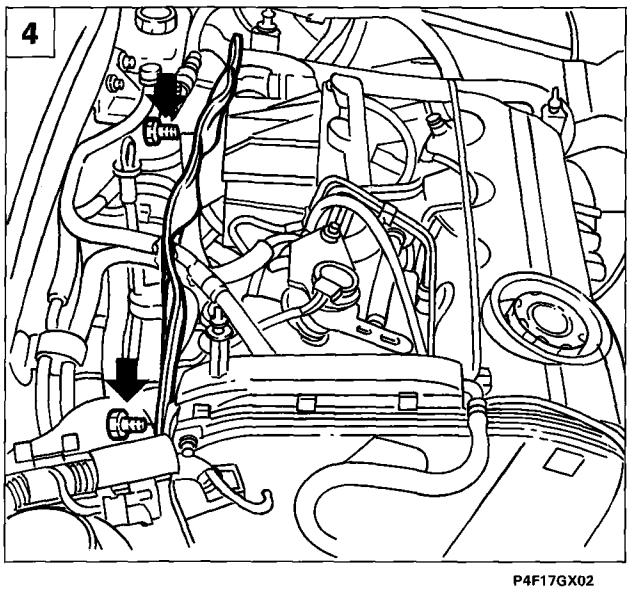

P4F17GX02

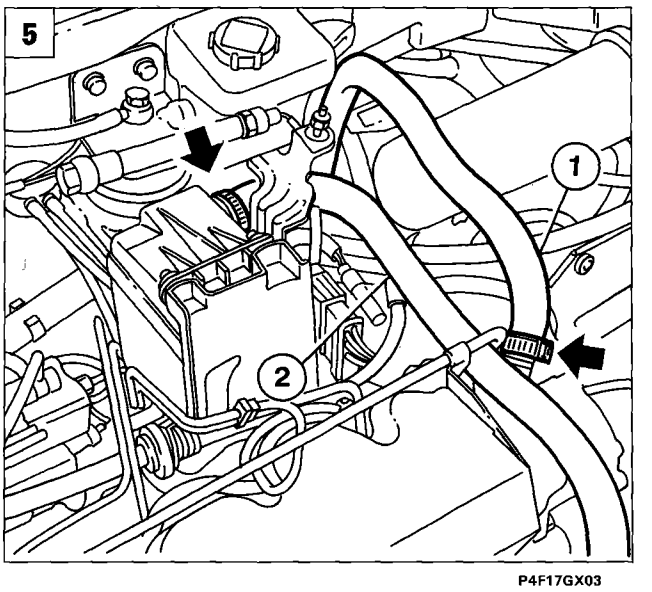

P4F17GX03

Copyright Fiat Auto

10.

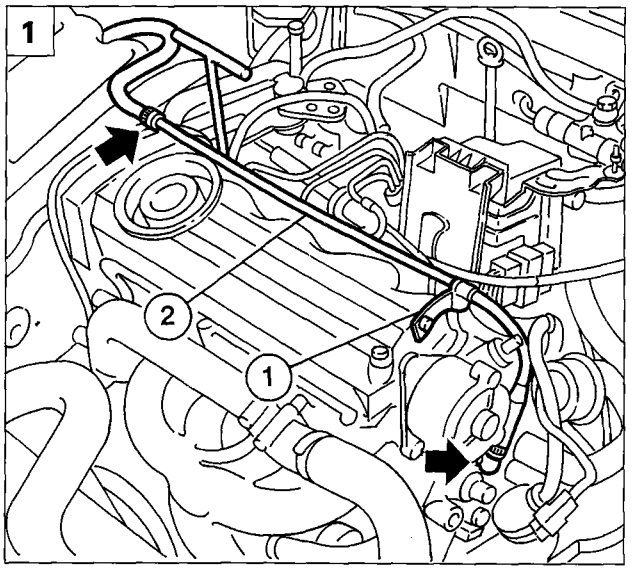

P4F18GX01

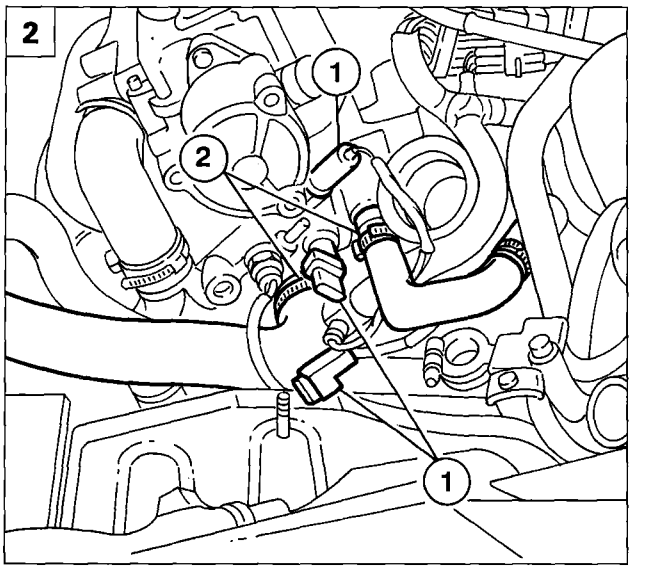

P4F18GX02

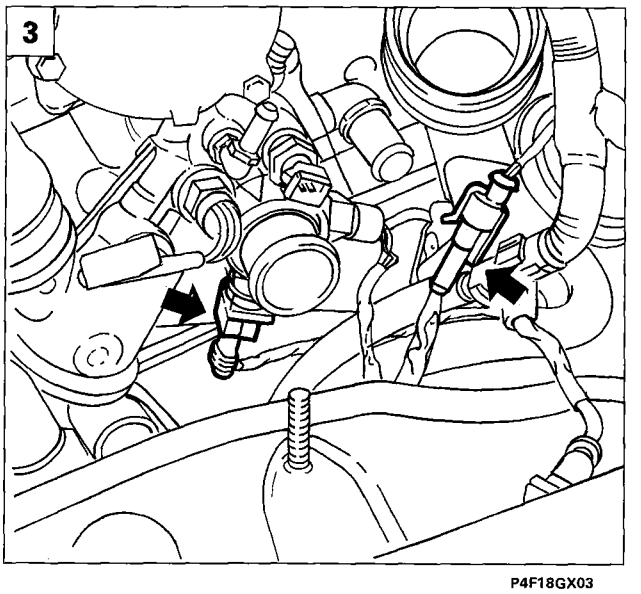

P4F18GX03

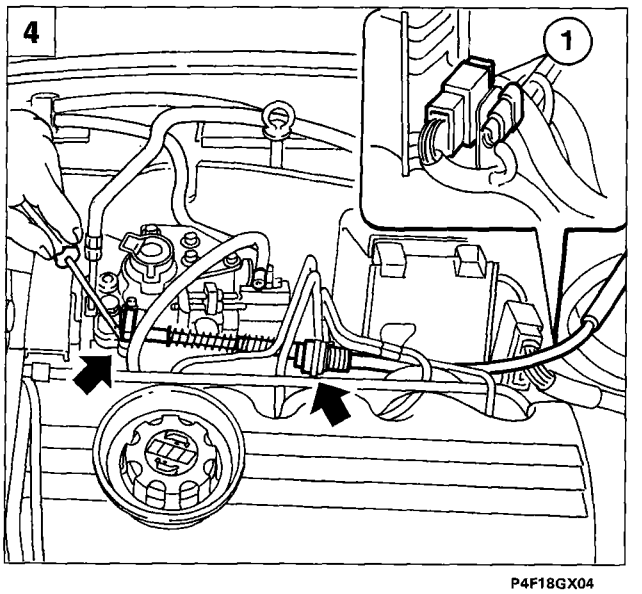

P4F18GX04

1. Use tool 1860967000 to unscrew the fitting on the cylinder head, unscrew bolt (1), loosen the arrowed clip and remove rigid pipe (2).
2. Disconnect electrical connections (1), then loosen clips (2) and disconnect the engine coolant lines.
3. Disconnect electrical connections indicated for the coolant sensors.
4. Disconnect the accelerator control cable from the arrowed points and disconnect the electrical connections (1).

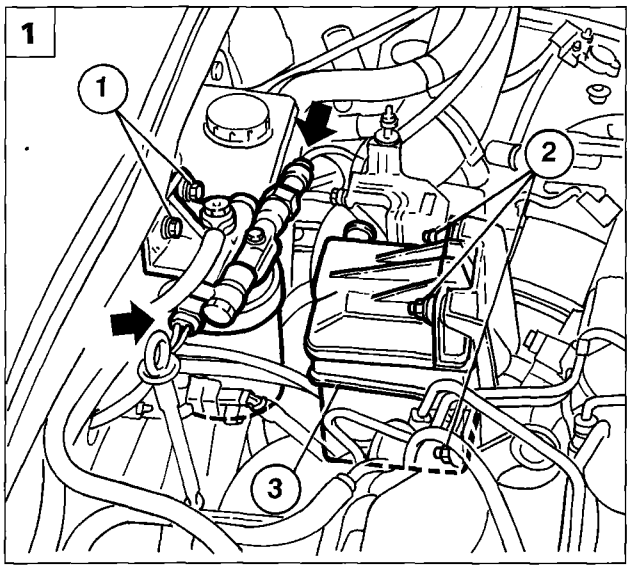

P4F19GX01

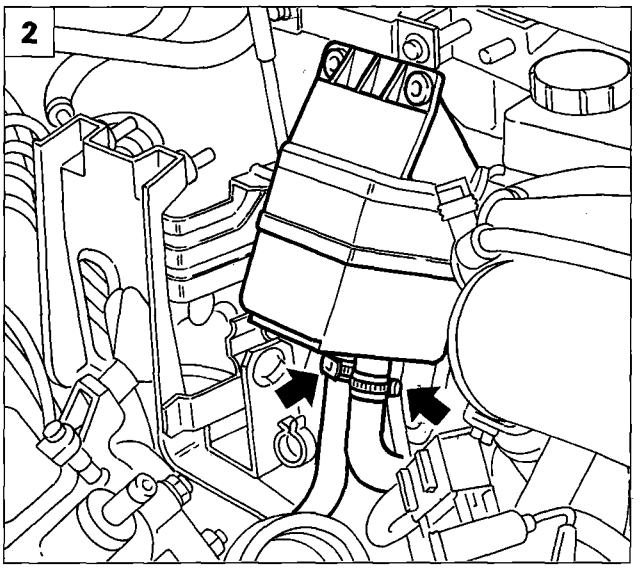

P4F19GX02

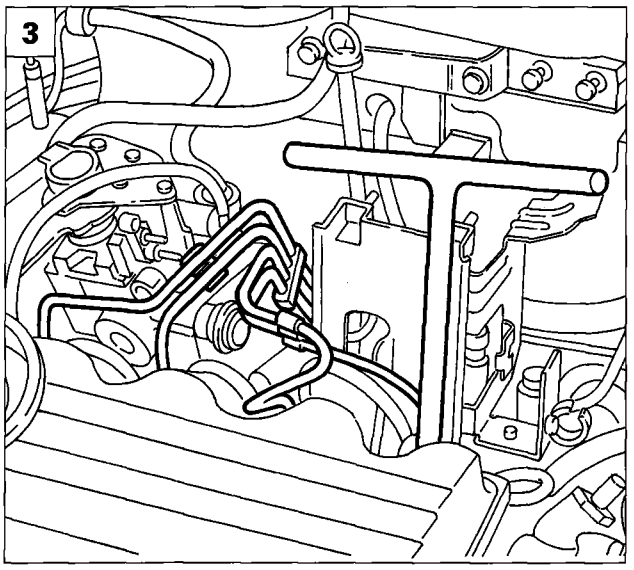

P4F19GX03

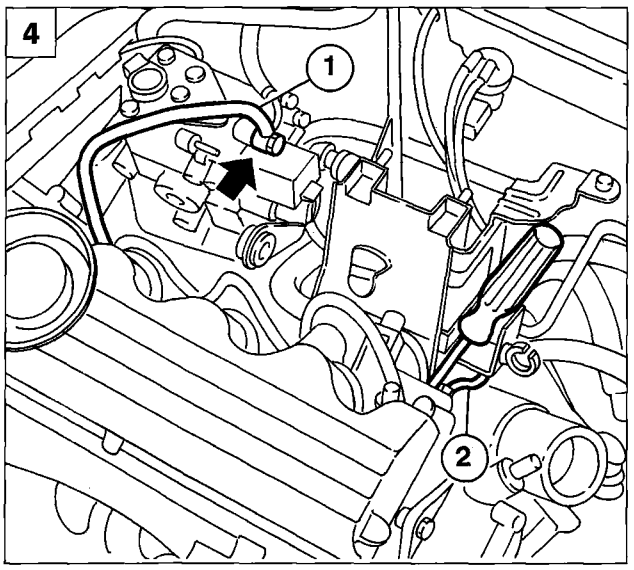

P4F19GX04

1. Disconnect electrical connections indicated by the arrows, unscrew retaining bolts (1), then remove the filter and place to one side without disconnecting the fuel lines.
   Unscrew the three nuts (2) and move the oil vapour separator (3) away from its bracket.

2. Loosen the arrowed clip and remove the oil vapour separator (1).

3. Use wrench 1852138000 to unscrew fittings of the fuel supply lines on the injectors and injection pump. Then remove the lines.

4. Disconnect the fuel return line (1) from the injection pump, then unscrew the retaining nut and disconnect the spark plug supply lead (2).

Copyright Fiat Auto

10.

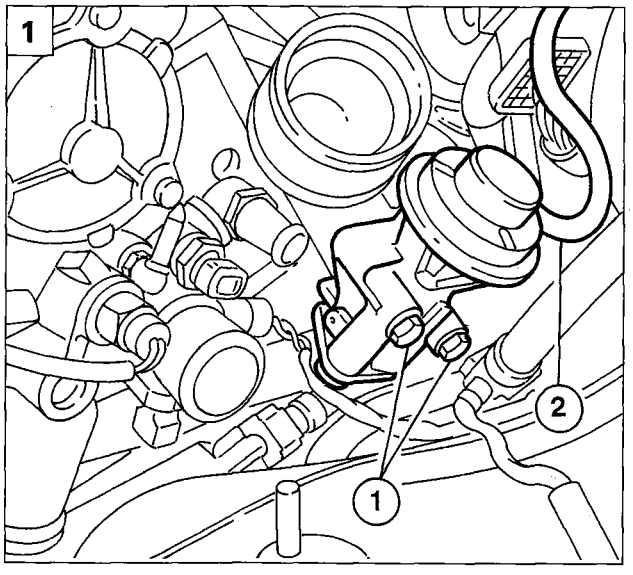

P4F20GX01

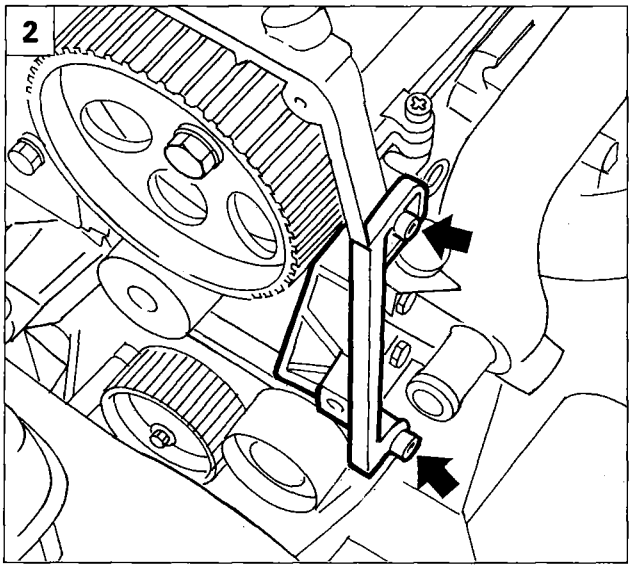

P4F23EX01

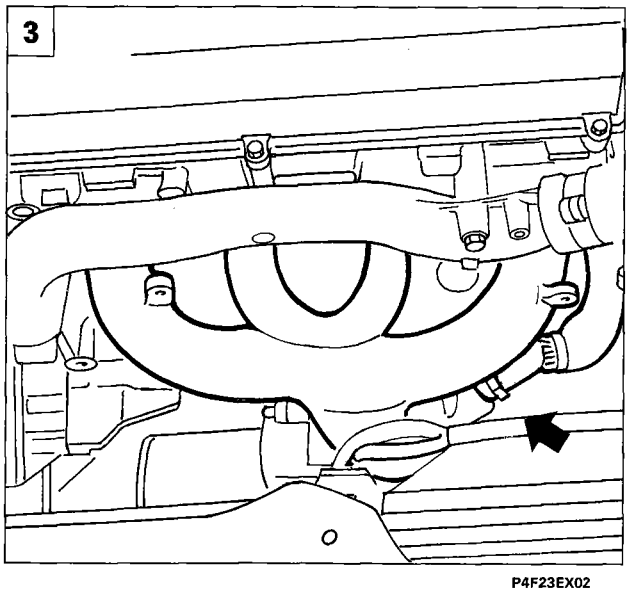

P4F23EX02

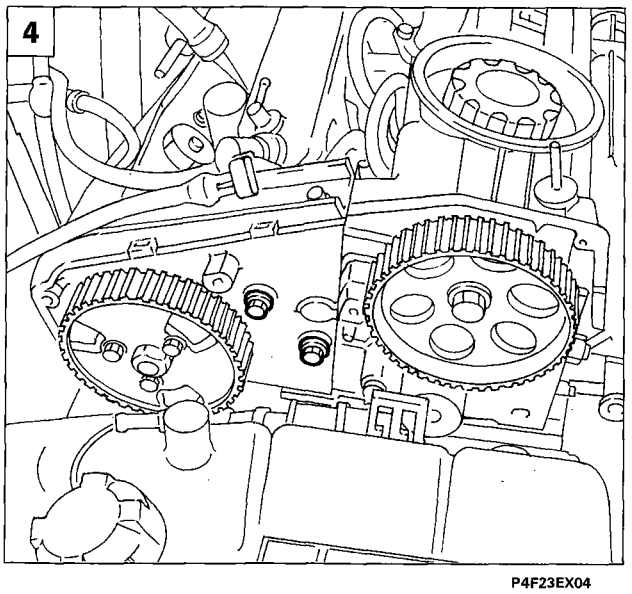

P4F23EX04

1. Unscrew bolts (1), disconnect pipe (2), separate the EGR valve from its pipe and then remove.

Remove the auxiliary component belt and the timing belt as described in the previous paragraphs.

2. Unscrew the retaining bolts shown and remove the timing belt side guard.

3. Unscrew the nuts retaining the exhaust manifold to the cylinder head, unscrew the nut indicated and move the rigid EGR valve pipe away from the manifold. Then release the exhaust manifold from its pins.

4. Unscrew the bolts retaining the inlet manifold to the injection pump bracket.

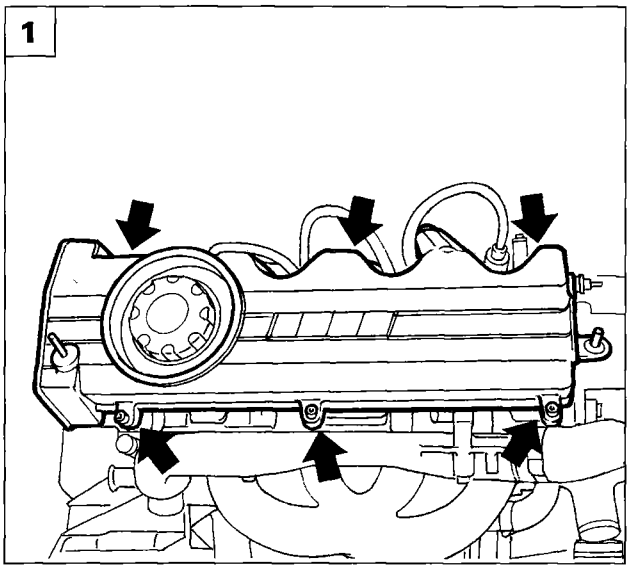

P4F21GX01

1. Remove the cam cover.

2. Use wrench 1852152000 to unscrew the bolts retaining the cylinder head to the crankcase and then remove the cylinder head and intake manifold.

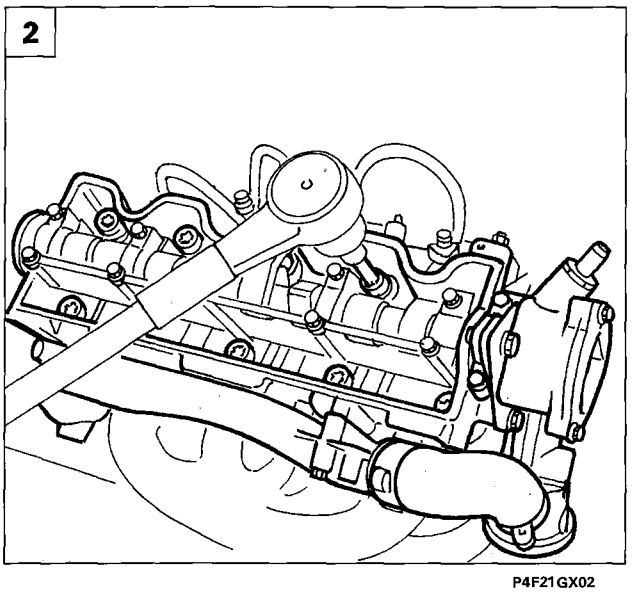

P4F21GX02

FITTING CYLINDER HEAD GASKET

3. After checking piston protrusion from the top of the crankcase, consult the table to find out the correct cylinder head gasket thickness to be fitted in order to maintain the specified compression ratio. Fit the gasket on the crankcase by installing on the locating pins so that the wording "AL-TO" (TOP) is facing the operator.

Average piston protrusion	Head gasket thickness	Number of notches
up to 0.80 mm	1.6 mm	-
0.80 to 0.90 mm	1.7 mm	1
more than 0.90 mm	1.8 mm	2

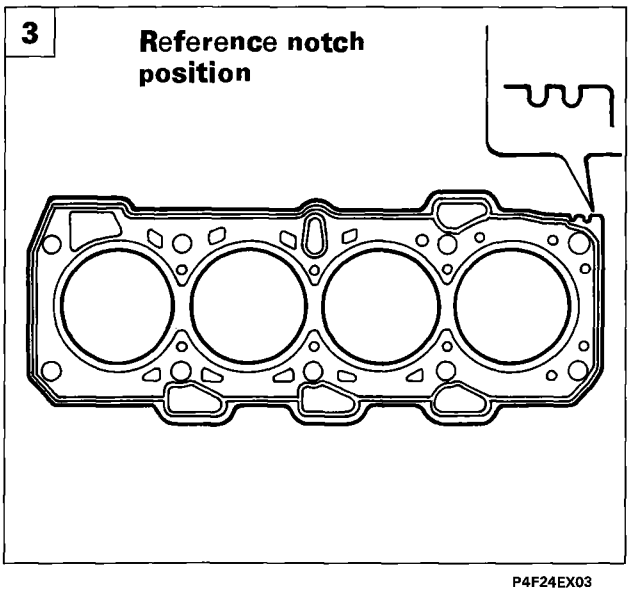

P4F24EX03

The cylinder head gasket is ASTADUR type. Due to the special material from which it is made, this gasket undergoes polymerisation during engine operation and hardens considerably during use. Take the following precautions to ensure that cylinder head gasket polymerisation takes place:

- *keep the gasket sealed in its plastic bag;*
- *do not remove from the bag until just before installation;*
- *do not lubricate the gasket or contaminate with oil. Take care to ensure that the surfaces of the cylinder head and crankcase are thoroughly cleaned.*

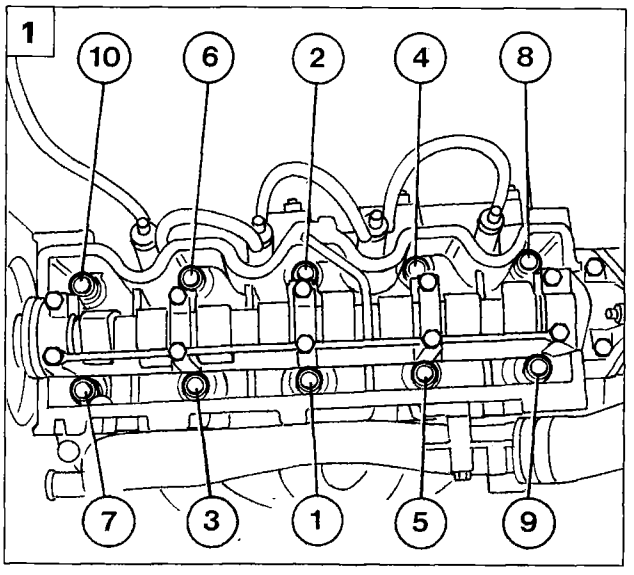

P4F22GX01

REFITTING CYLINDER HEAD AND TIGHTENING

1. Position the cylinder head on the crankcase, then tighten the retaining bolts to torque, noting that tightening order during each specified tightening stage is as shown in figure.

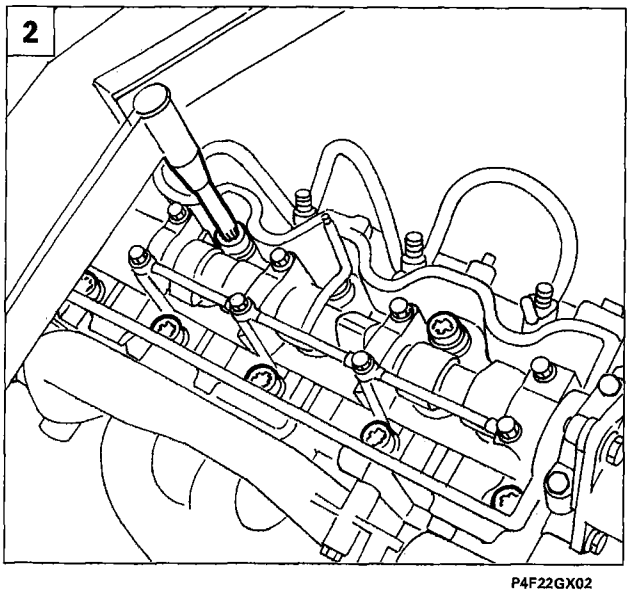

P4F22GX02

2. Oil screws and washers and leave to drain for at least 30 minutes; screw in bolts to a torque of 2 daNm, then carry out final tightening to a torque of 6.5 daNm using wrench 1852154000.

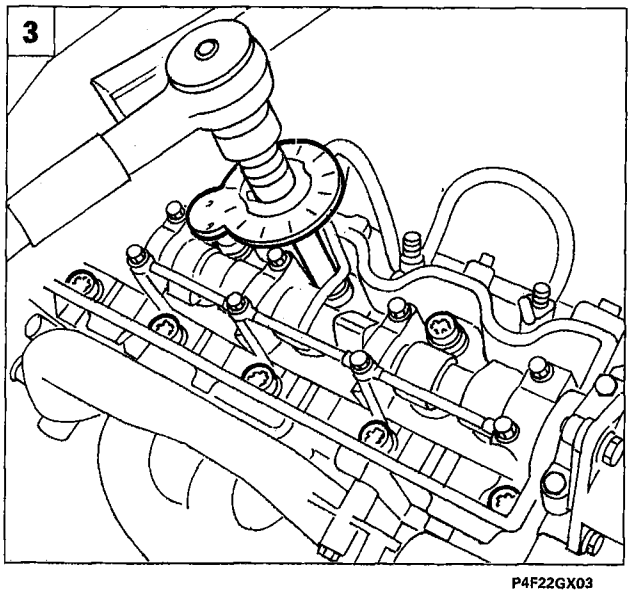

P4F22GX03

3. Tighten bolts through 270° in three different stages (90°+90°+90°) using angle wrench 1852154000 fitted to tool 1860942000.

REPLACING COOLANT PUMP

To replace the coolant pump, refer to section 10 - publication no. 506.763/02 for the 1910 TD 100 engine.

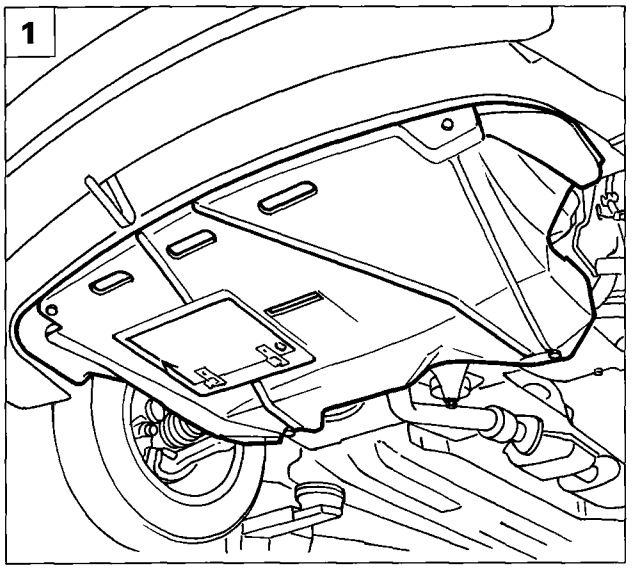

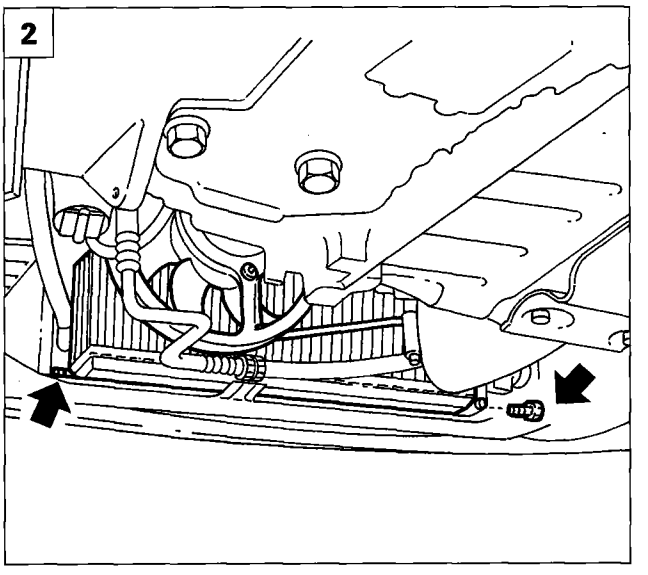

P4F23GX01

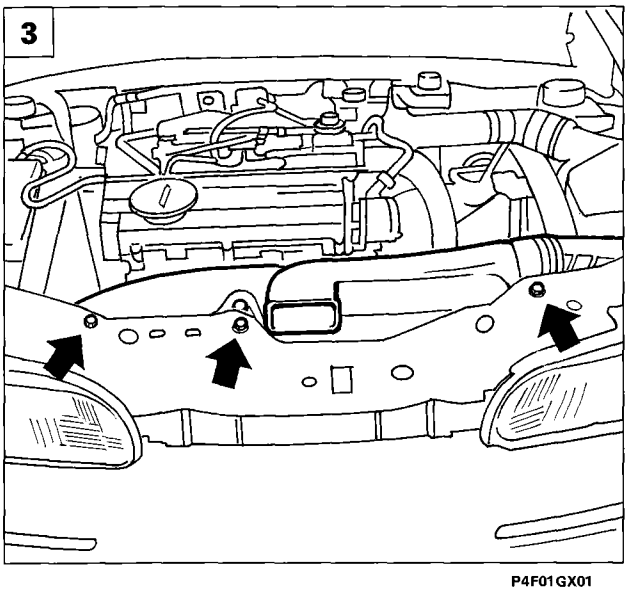

P4F01GX01

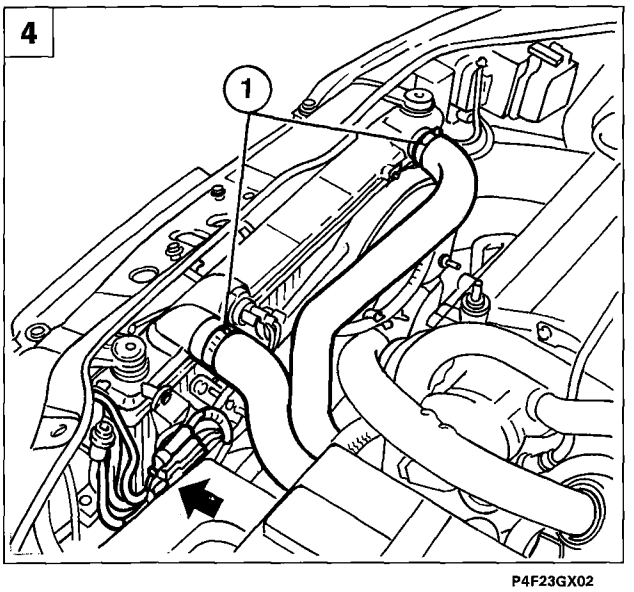

P4F23GX02

REMOVING - REFITTING RADIATOR

NOTE *The procedure described below is for the version with air conditioner. For versions without air conditioner, refer to the similar procedure described on section 10 - publication no. 506.763/02 for the 1910 TD 100 engine.*

Place the vehicle on a lift, disconnect the battery negative terminal and proceed as follows.

1. Raise the lift and remove the lower engine bay protection.

2. Unscrew the bolts indicated, which retain the bottom of the condenser to the engine cooling radiator.

3. Unscrew the retaining bolts indicated and remove the air intake.

4. Position a container to collect the coolant, then loosen clip (1), disconnect the lines shown and drain the coolant.
   Disconnect arrowed electrical connections for the fan assembly and thermostatic switch.

10.

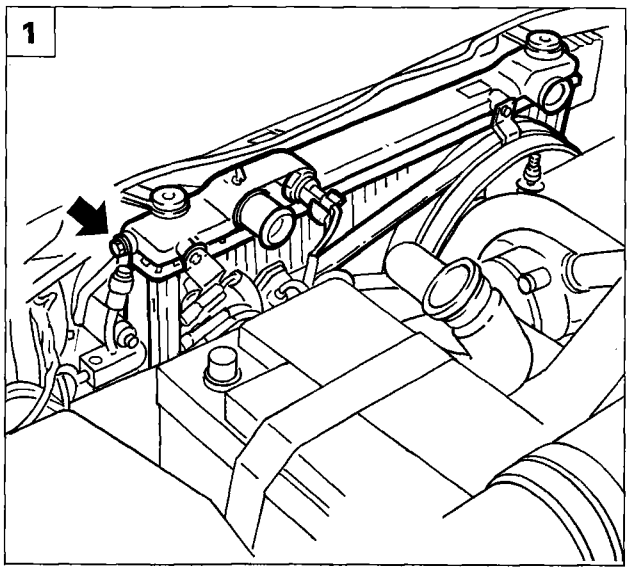

P4F24GX01

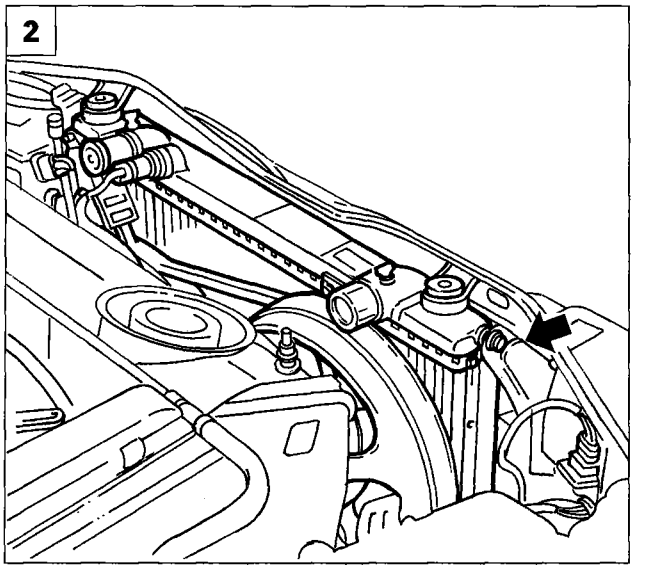

P4F24GX02

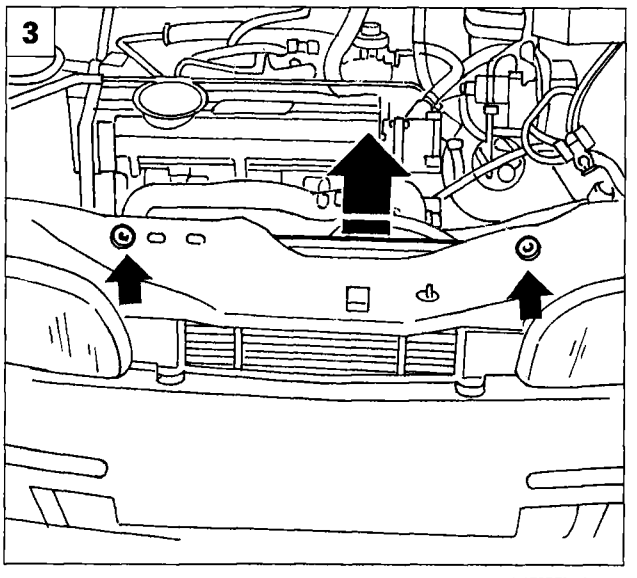

P4F05EX01

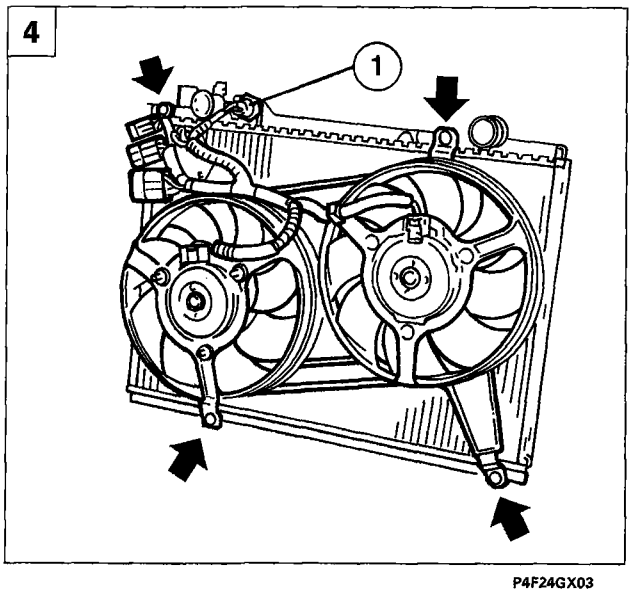

P4F24GX03

1. 2. Unscrew the arrowed bolts, which fasten the top of the condenser to the engine cooling radiator.

3. Unscrew the bolts retaining the radiator to the body, release from the lower pins and remove radiator from the top part of the engine bay.

4. Remove thermostatic switch (1), unscrew the four retaining bolts shown and remove the fan assembly from the radiator.

COOLING SYSTEM FILLING PROCEDURE

For the cooling circuit filling procedure, refer to section 10 - publication no. 506.763/02 for the 1910 TD 100 engine.

page

REMOVING - REFITTING

- Removing - refitting power unit 1

REPLACING AUXILIARY BELT

- Removing auxiliary belt 12
- Refitting auxiliary belt 13

REPLACING TIMING BELT

- Removing timing belt 14
- Refitting and adjusting timing belt tension 17

REMOVING - REFITTING CYLINDER HEAD

- Removing cylinder head 19
- Refitting cylinder head 27

REPLACING COOLANT PUMP

- Replacing coolant pump 32

REMOVING - REFITTING RADIATOR

- Removing - refitting radiator 33
- Cooling system filling procedure (heated version) 35
- Cooling system filling procedure (version with a/c) 35

Copyright Fiat Auto

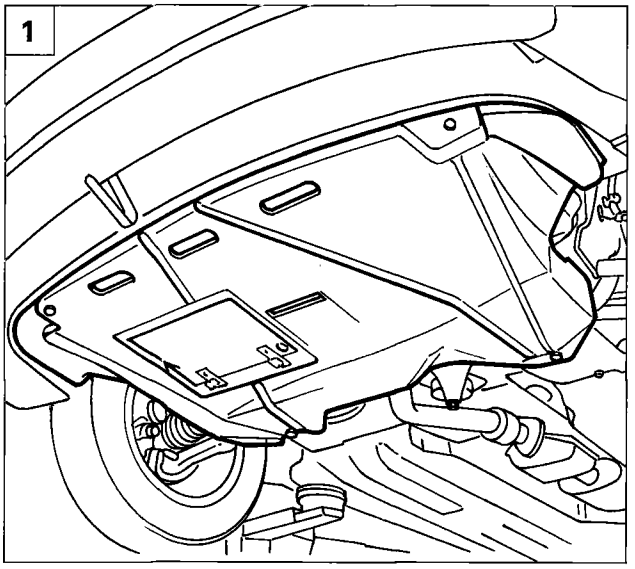

P4F003B01

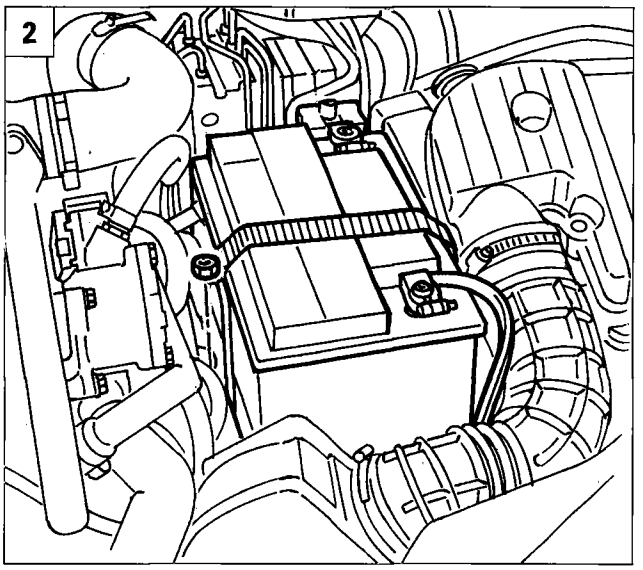

P4F060B01

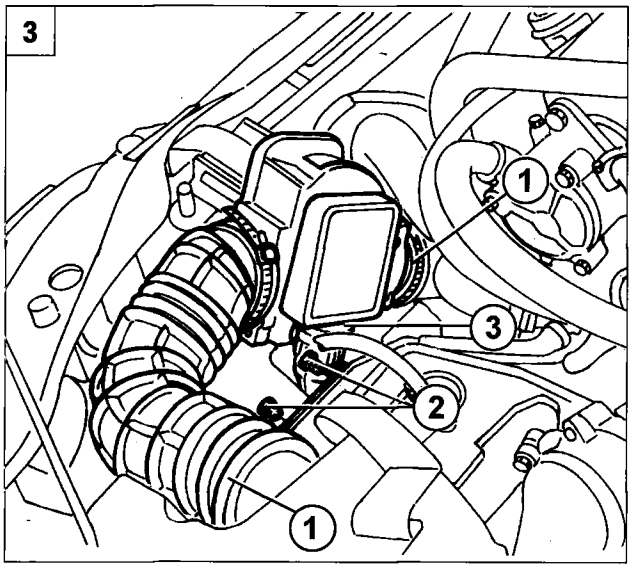

P4F060B02

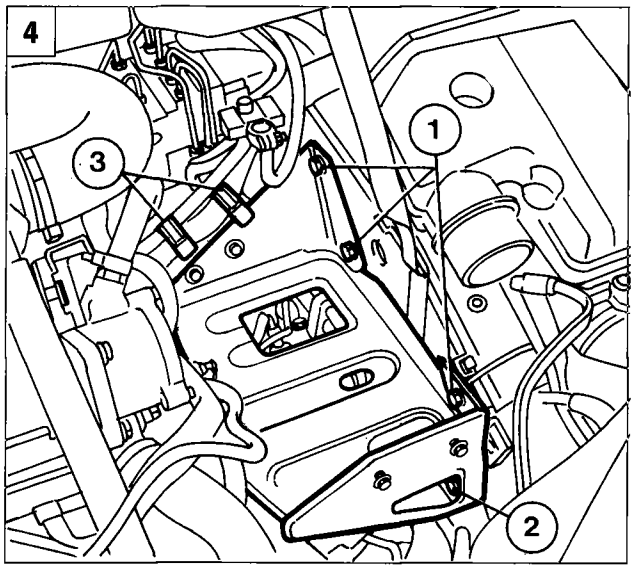

P4F060B03

Before removing, make two mount brackets to be used with tool 1860860000 to support the engine during removal - refitting. Follow the instructions given on the first page of Section 21 - 27 "Removing - refitting gearbox" engine 2387 TD.

REMOVING - REFITTING POWER UNIT

Position the vehicle on a lift, remove the front wheels and disconnect the battery negative terminal. Drain the engine air conditioning system as described in Sect.50 "Auxiliary components" in this manual, then proceed as follows:

1. Raise the lift and remove the lower power unit protection.
2. Disconnect the battery positive terminal, unscrew the nut retaining the battery to its cradle, then remove from the engine bay.
3. Loosen the two clips (1), unscrew retaining bolts (2), disconnect connection (3), then remove the air intake sleeve together with debimeter.
4. Unscrew bolts (1), loosen bolt (2), open clips (3) to release the engine wiring, then remove the battery cradle.

Copyright Fiat Auto

10.

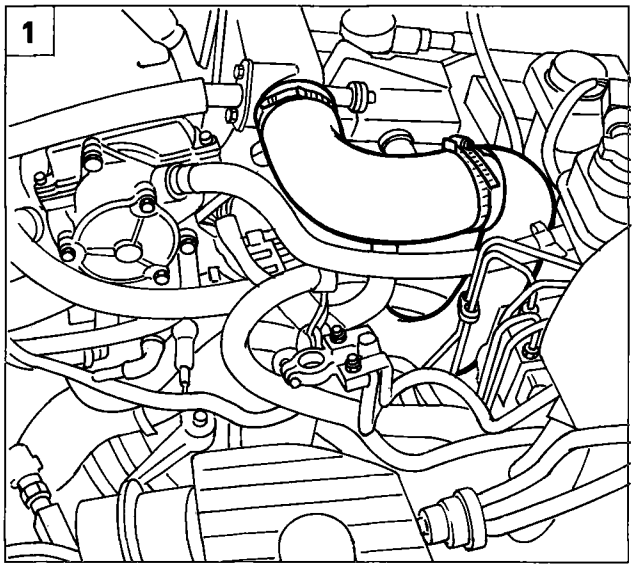

P4F060B04

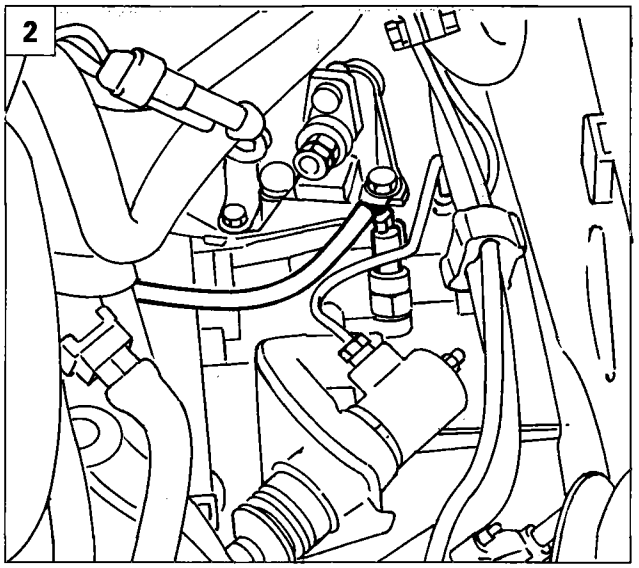

P4F061B01

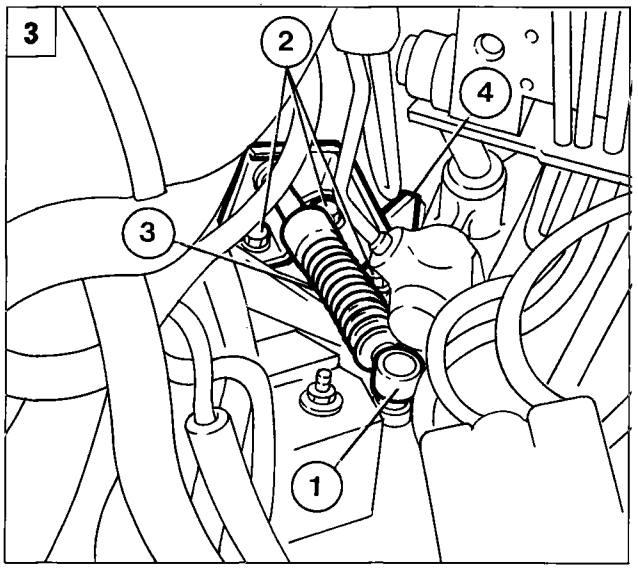

P4F061B02

1. Loosen clips and remove the sleeve as shown.
2. Disconnect the reversing light switch connection.
3. Prise head (1) off the ball joint, unscrew retaining retaining bolts (2), then prise gear selection cable (2) off the gearbox together with the mount bracket (4).
4. Remove the dehydrating filter by undoing the fastenings shown.
5. Position a suitable container to recover the coolant and remove the coolant intake sleeve from the point illustrated.

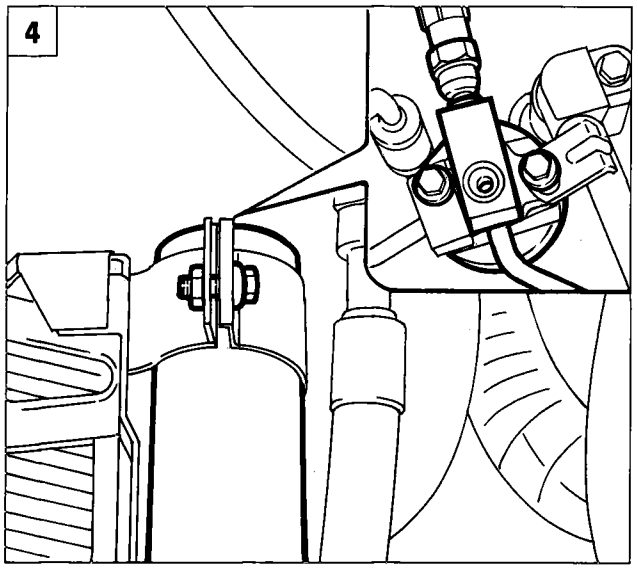

P4F063B03

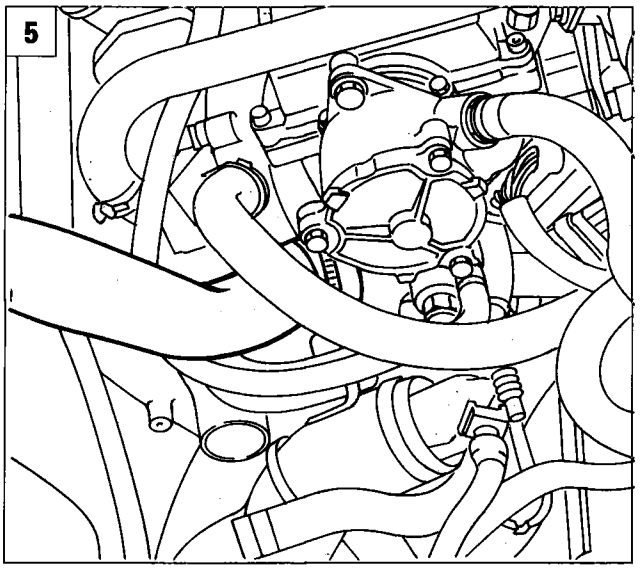

P4F02FX05

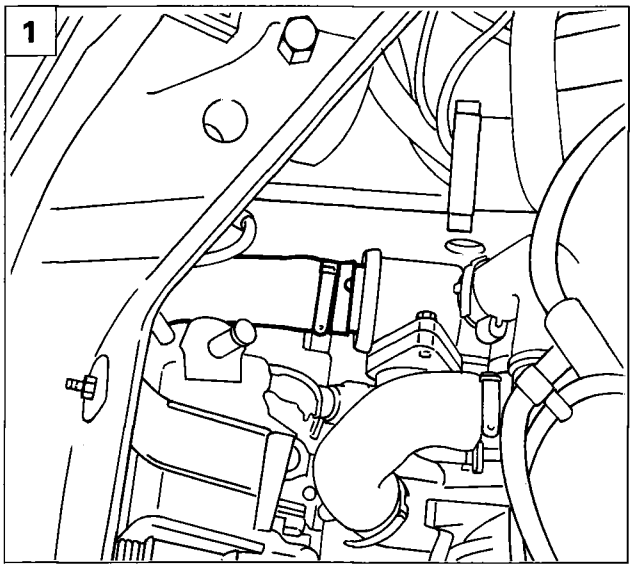

P4F03FX01

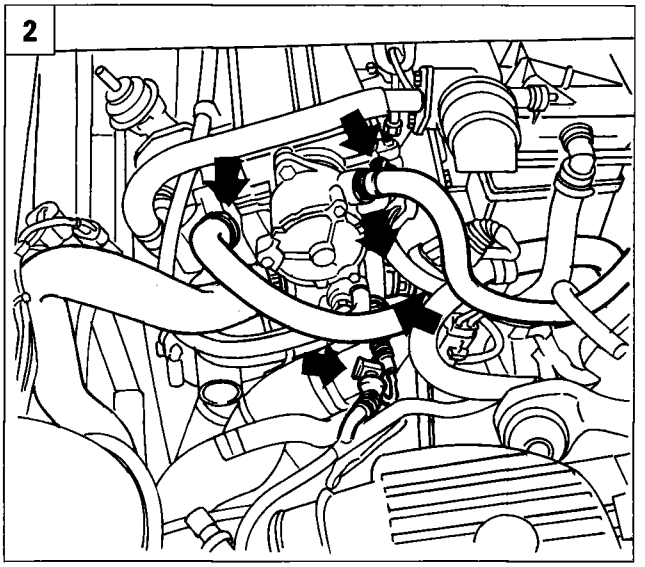

P4F03FX02

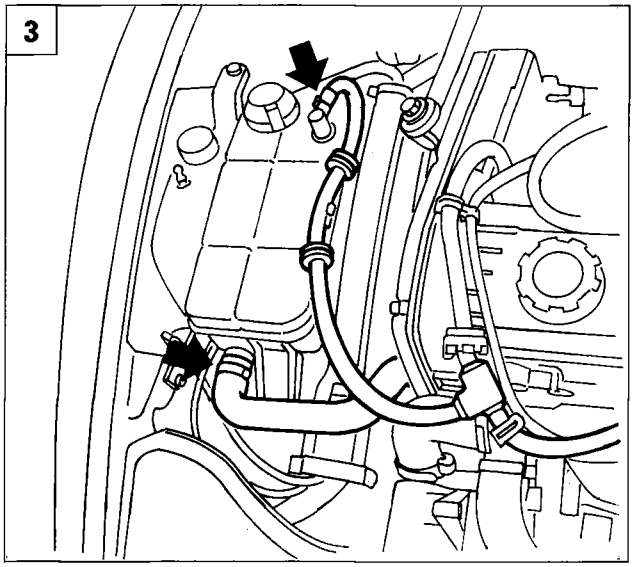

P4F03FX03

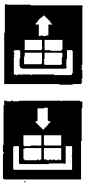

1. Remove the engine coolant outlet sleeve from the point shown.
2. Remove lines leading from the heater unit and both coolant lines shown from the thermostat and disconnect both electrical connections shown.
3. Disconnect the lines shown from the expansion tank.
4. Disconnect the two fuel outlet and inlet lines.
5. Unscrew the fan retaining bolts.

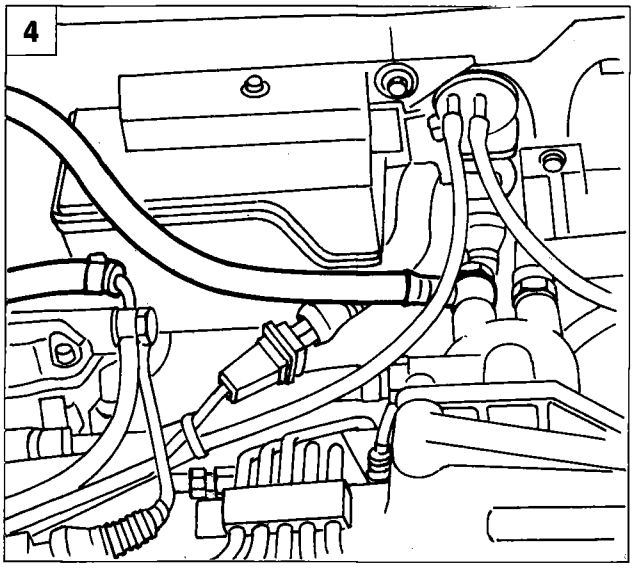

P4F03FX04

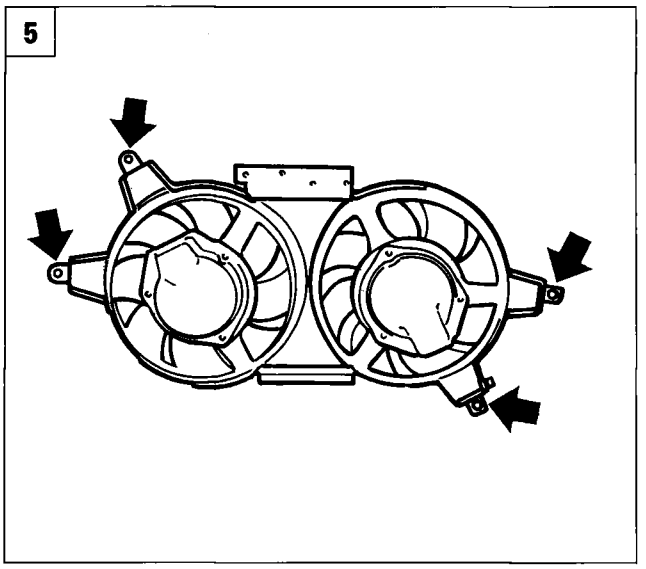

P4F03FX05

Copyright Fiat Auto

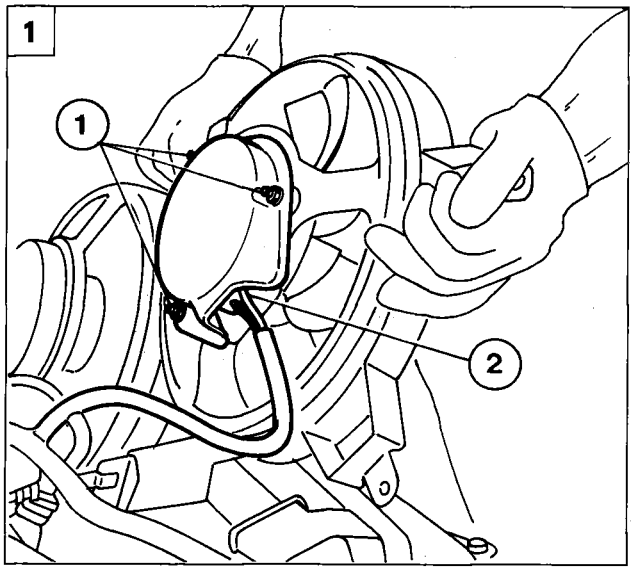

P4F04FX01

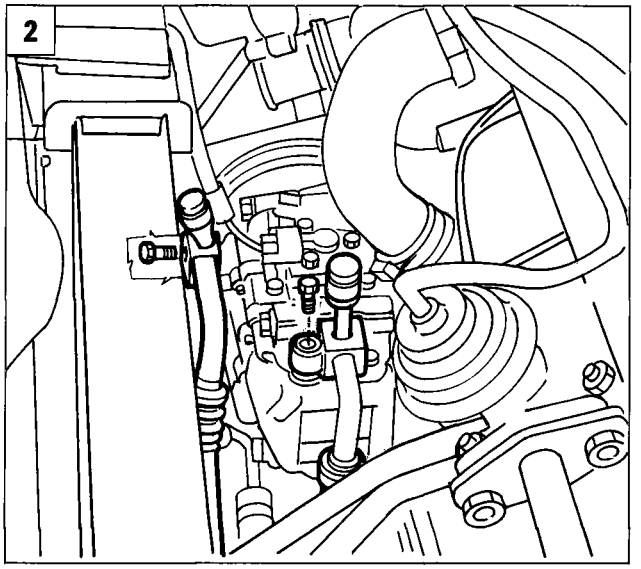

P4F04FX02

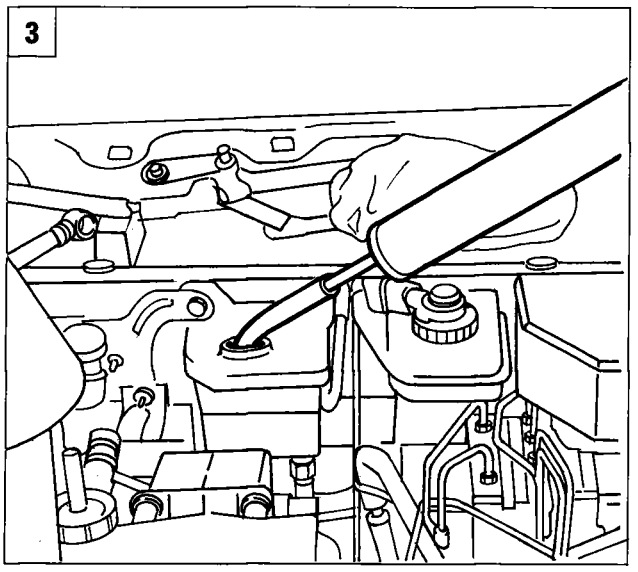

P4F04FX03

1. Loosen bolts (1) retaining the heat shield, lift shield, disconnect connection (2), repeat the operation on the other cover and then remove the fan.
2. Undo the fastenings shown to disconnect the lines from the air conditioner compressor.
3. Drain the fluid form the power steering pump using appropriate means to recover the oil.
4. *Unscrew the bolts fastening the reservoir to the bulkhead and disconnect the lines shown.*
5. Disconnect both pipes from the modulator solenoid and the associated electrical connection shown.

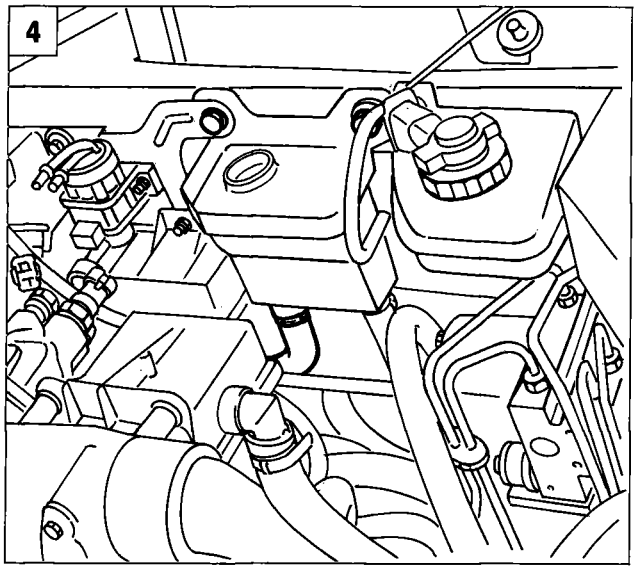

P4F04FX04

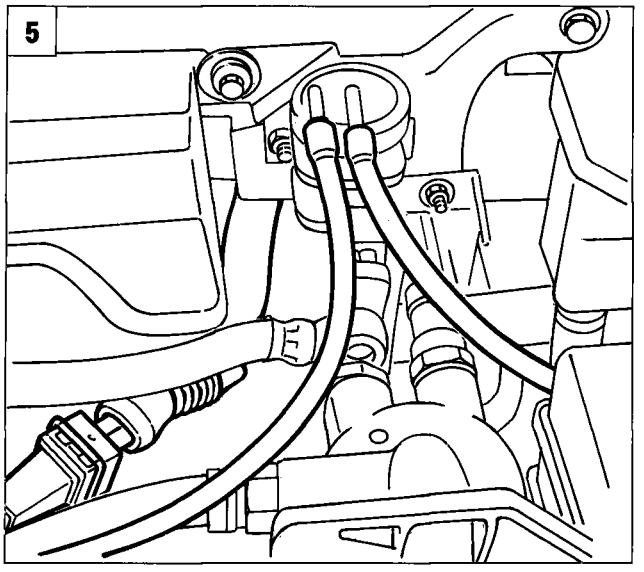

P4F04FX05

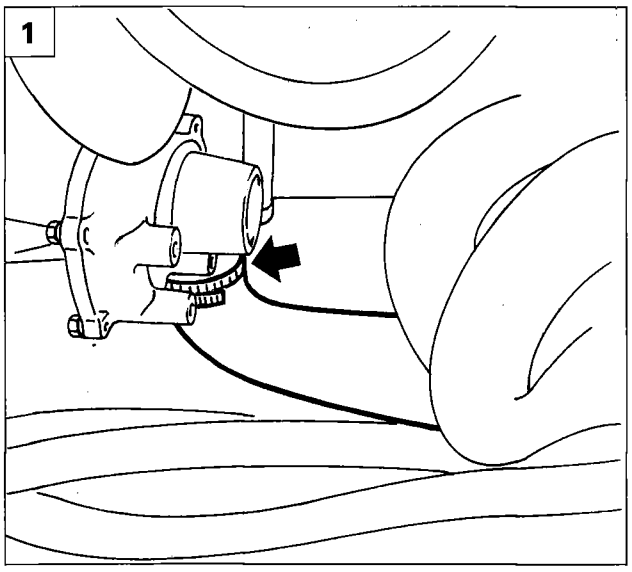

P4F05FX01

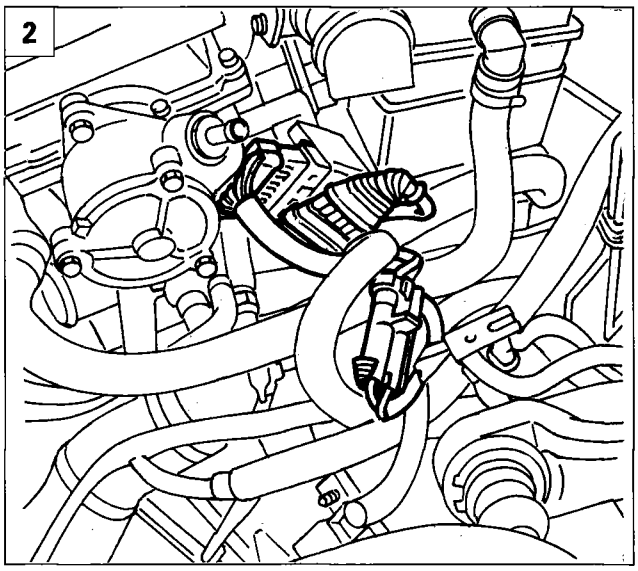

P4F05FX02

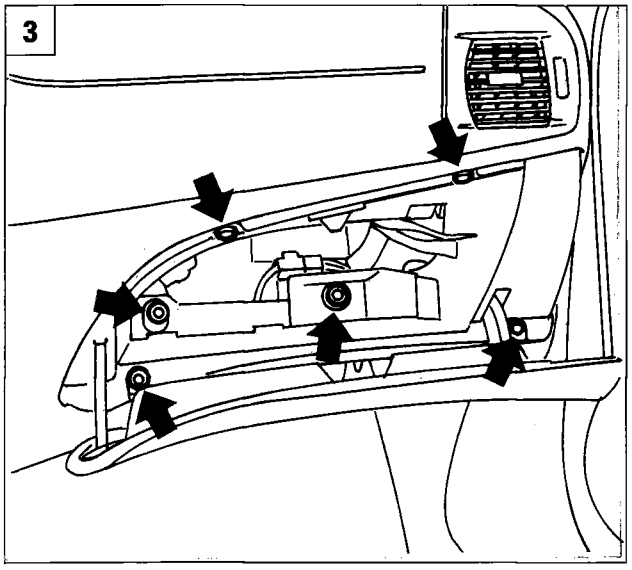

P4F05FX03

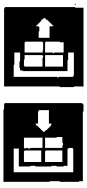

1. Remove the line connecting the turbocharger to the heat exchanger.
2. Disconnect electrical connections shown.
3. Working from inside the car, remove the glove compartment by unscrewing the retaining screws shown.
4. Disconnect connector shown from the injection ECU and the two relays from their seats.
5. Remove the pollen filter protection after removing the wiper arms as described in Sect.70 Bodywork, unscrew both screws retaining the engine wiring to the bulkhead.

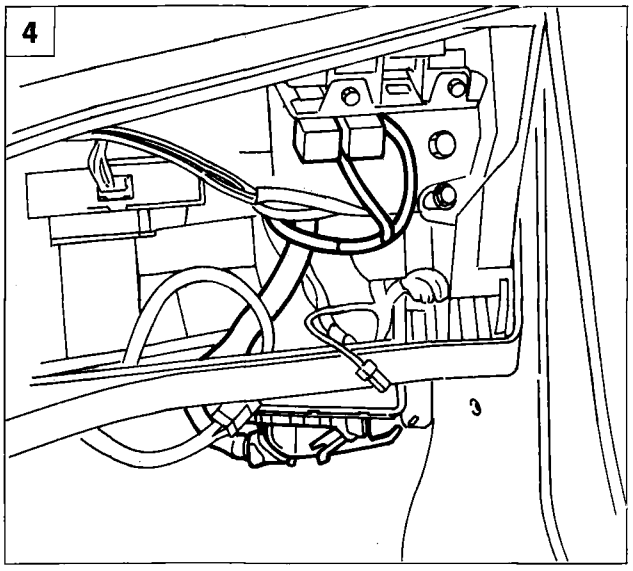

P4F05FX04

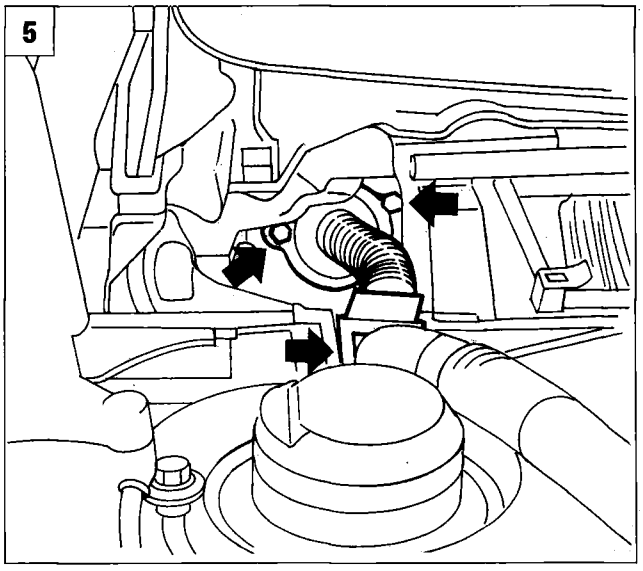

P4F05FX05

10.

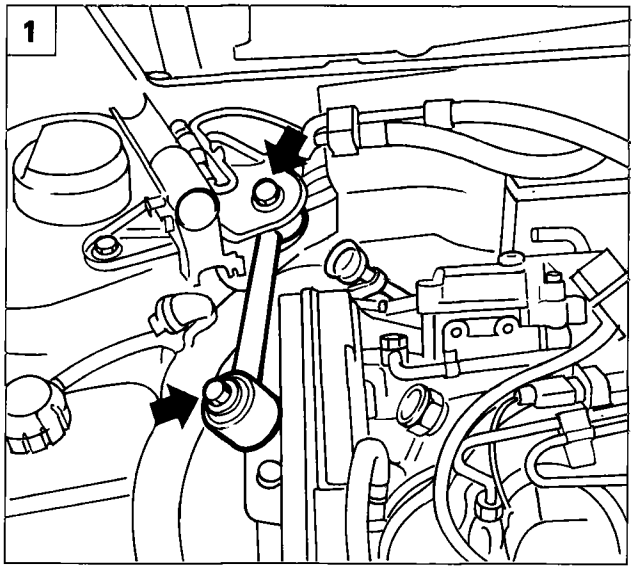

P4F06FX01

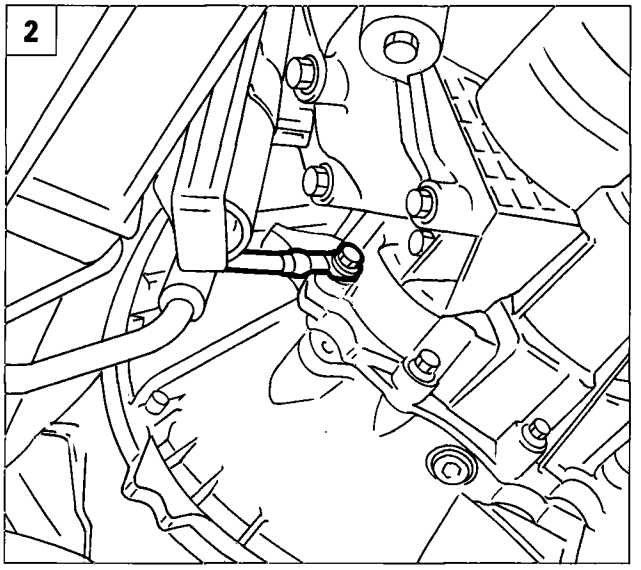

P4F063B01

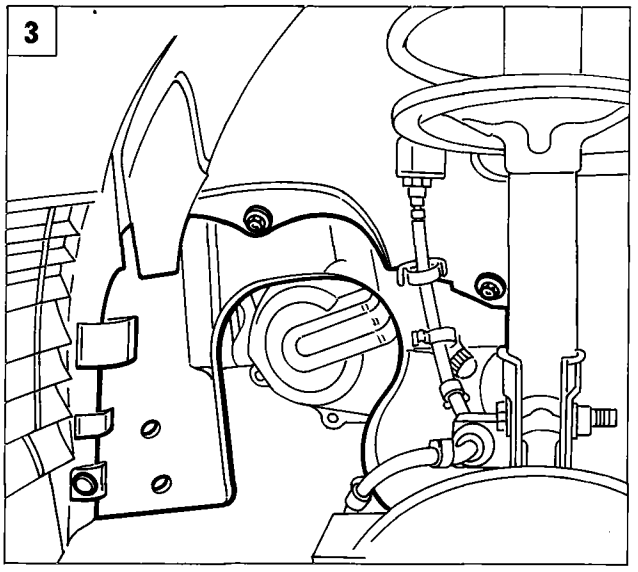

P4F06FX03

1. Remove the reaction rod from the mount bracket by undoing the retaining bolts shown.
2. Disconnect the engine earth from the gearbox bell housing.
3. Use tool 1878077000 to undo the stud, unscrew the screws and release the dust guard from its seat.
4. Working from the wheel arch compartment, unscrew bolts (1) retaining the clutch cylinder mount bracket.
5. Prise off the right front wheel arch guard.

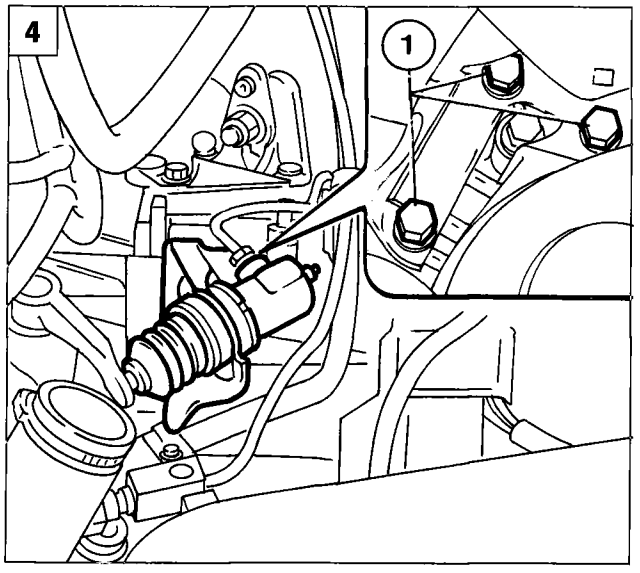

P4F063B04

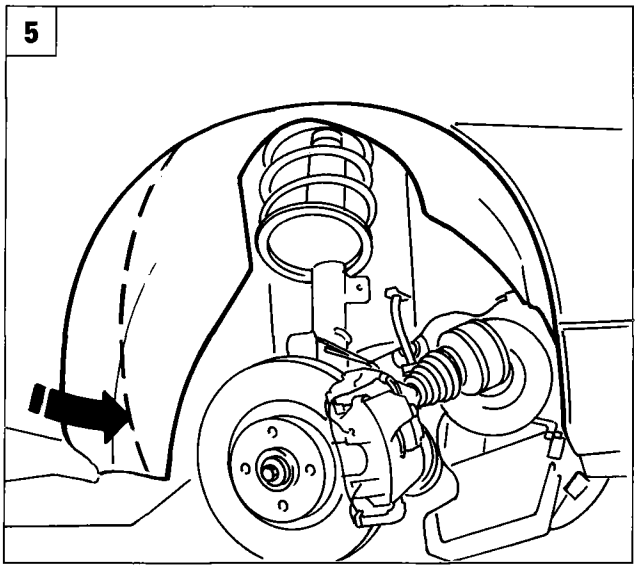

P4F06FX05

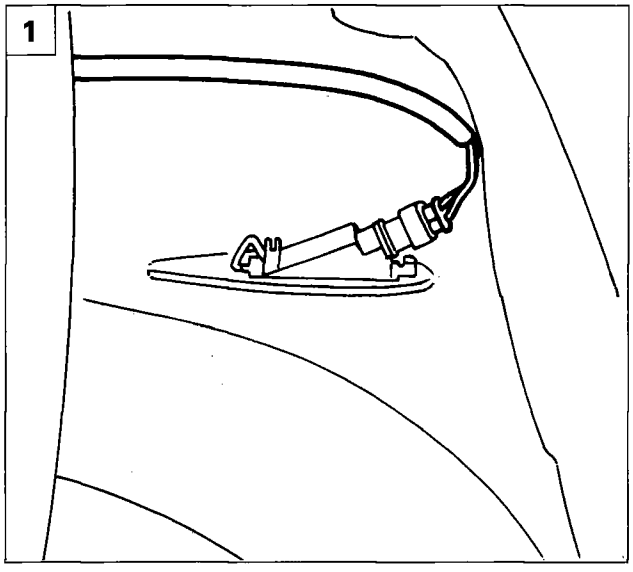

P4F07FX01

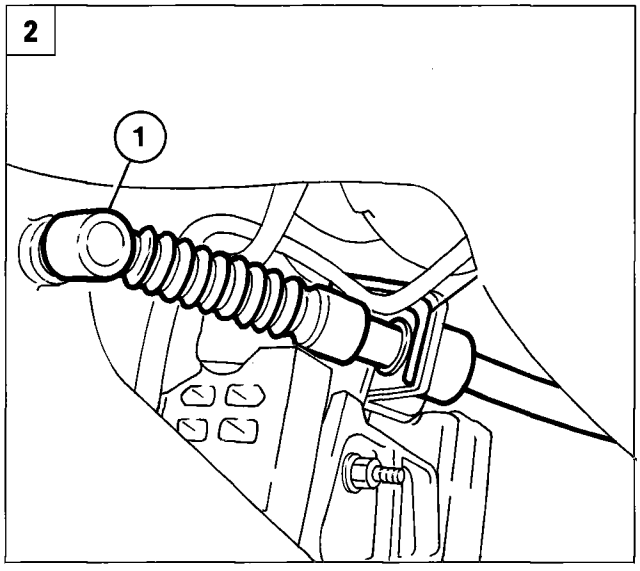

P4F064B01

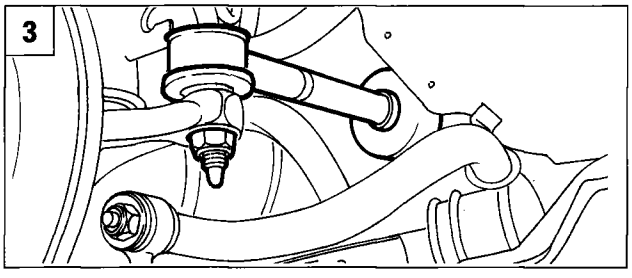

P4F002B05

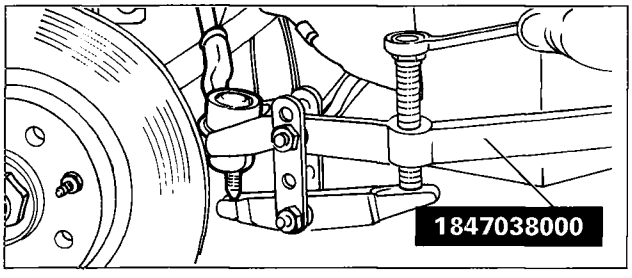

P4F002B06

1. Disconnect the right side turn signal connection and, working from the engine bay, withdraw the engine wiring and fasten to the engine.
2. Prise up head (1), then disconnect the gear engagement cable from the gearbox.
3. Unscrew nut retaining the steering link head, then use tool 1847038000 to disconnect from the pillar.
4. Disconnect the half-axles by undoing the bolts connecting the constant velocity joints to the gearbox flange.
5. Unscrew bolt (1) and loosen bolt (2) retaining the suspension strut, then turn the strut down to release the drive shaft from the differential.

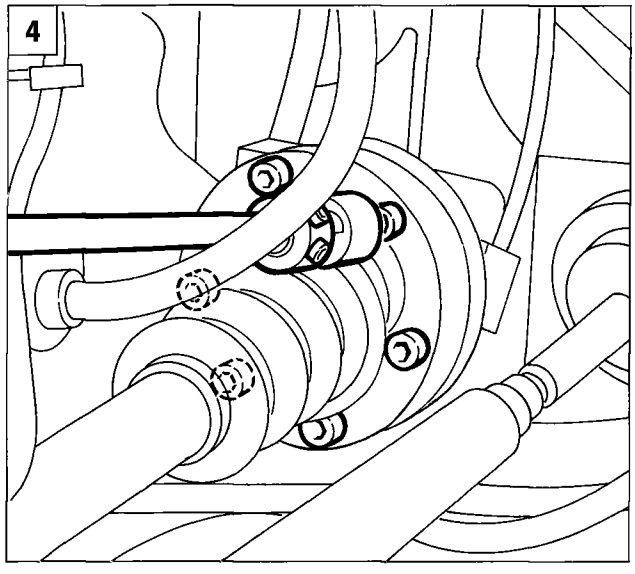

P4F039B01

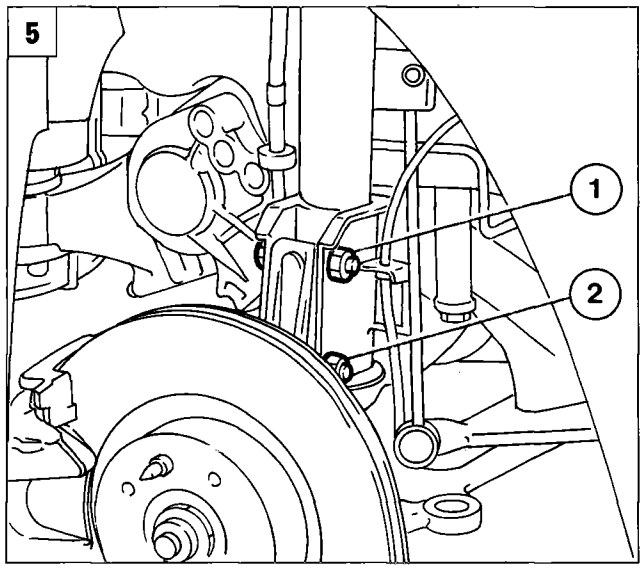

P4F064B02

10.

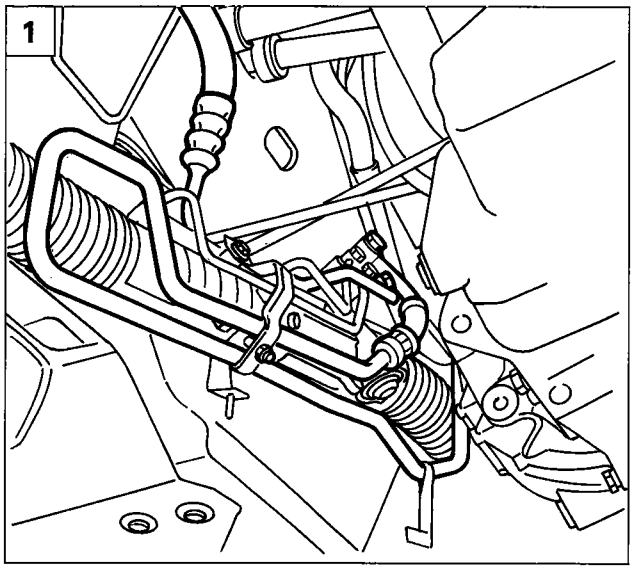

P4F08FX01

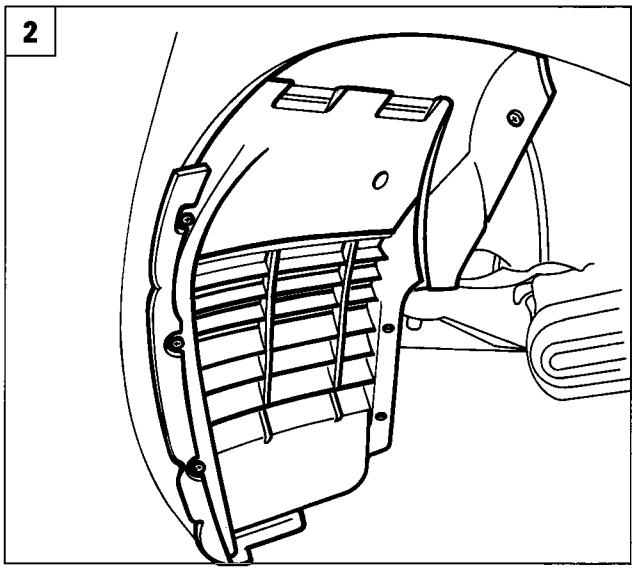

P4F08FX02

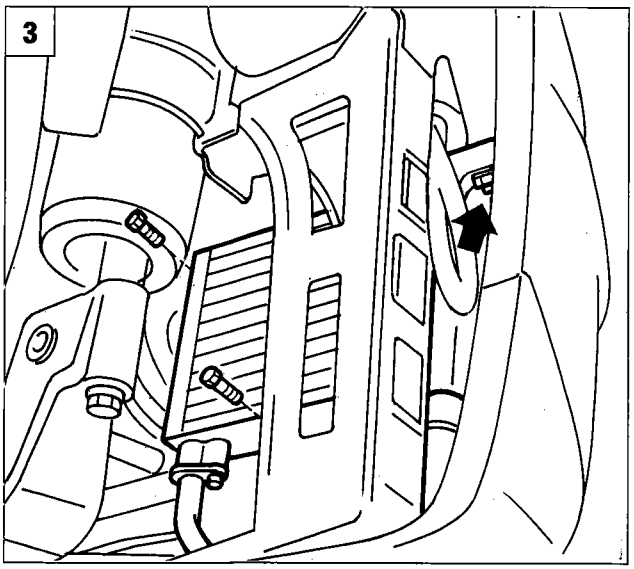

P4F08FX03

1. Disconnect both power steering fluid fittings from the steering box by releasing from the vibration-proof bracket.
2. Remove the dust shield as shown.
3. Remove the engine oil heat exchanger from the fastenings as shown, then secure to power unit.
4. Remove screws retaining the first section of the exhaust pipe to the manifold and the vibration-proof bracket retaining bolts.
5. Disconnect the first exhaust pipe section from the catalytic converter.

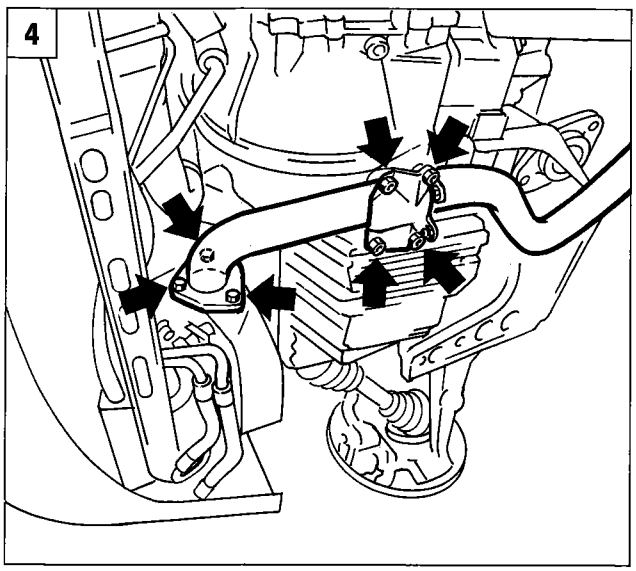

P4F065B02

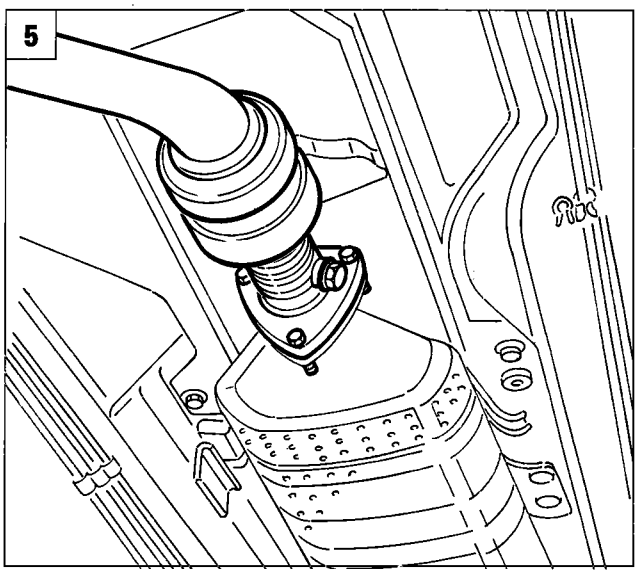

P4F004B04

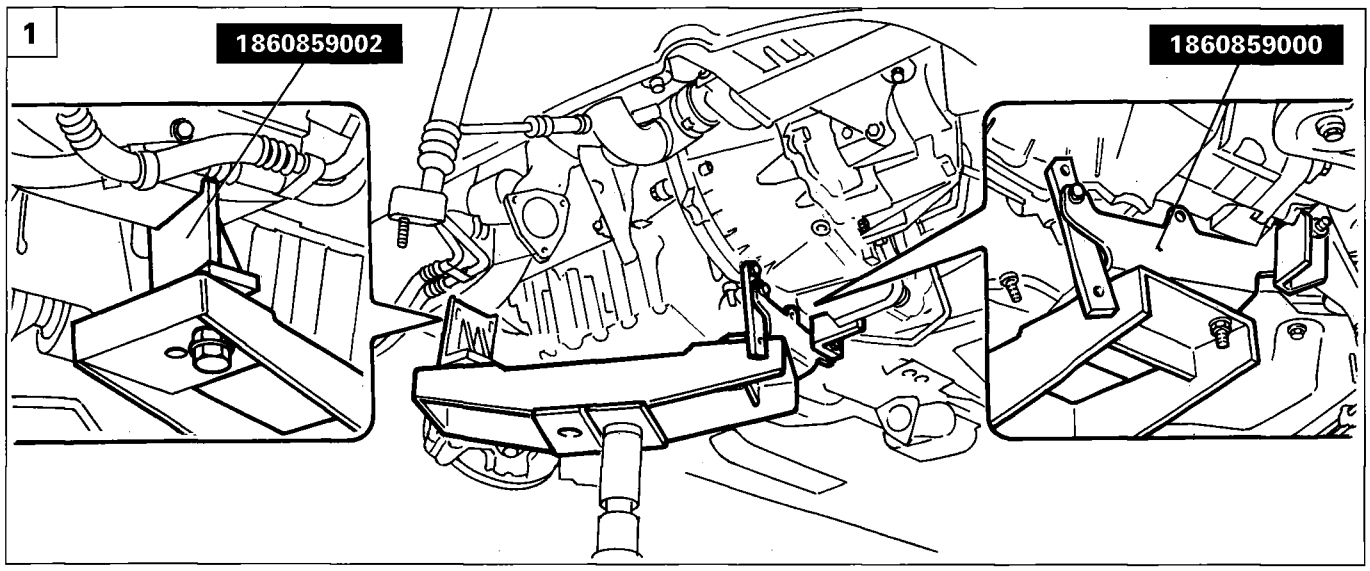

P4F09FX01

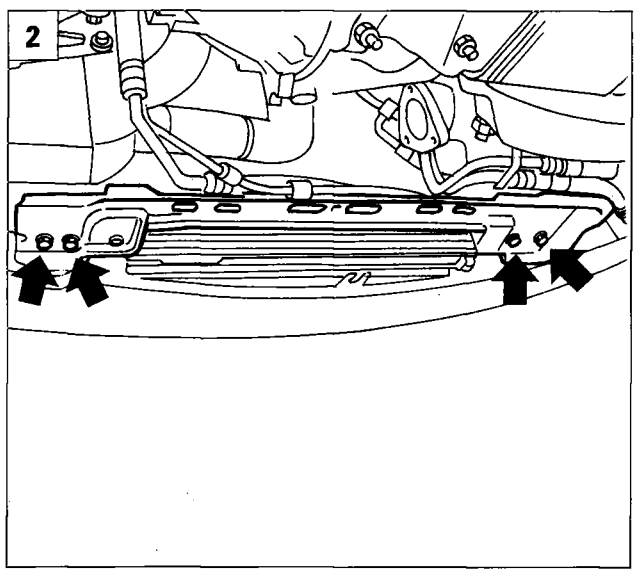

P4F09FX02

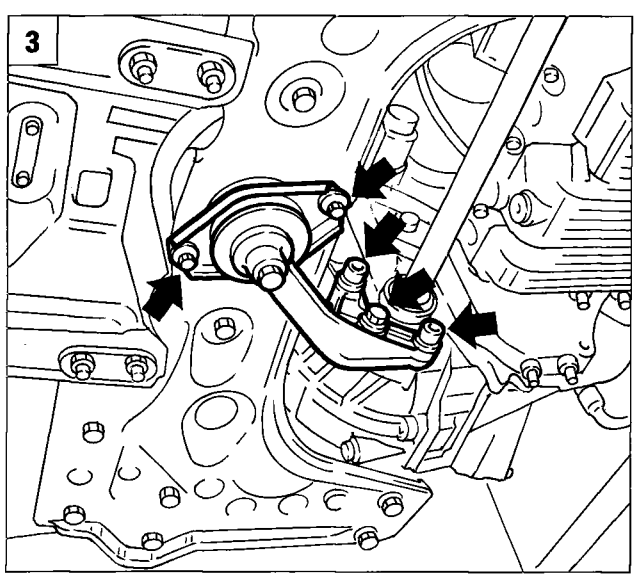

P4F065B04

1. Position engine support tool 1860860000 with the two engine mount brackets made previously on the hydraulic jack and fasten to power unit using the tools shown.

The hydraulic jack should be designed to carry at least 1000 kg and be high enough to allow the power unit to be removed from below. It is therefore necessary to consider maximum possible lift height and minimum possible hydraulic jack height.

2. Remove the lower beam by undoing the retaining bolts shown.
3. Remove the central power unit mount by unscrewing the retaining bolts shown.

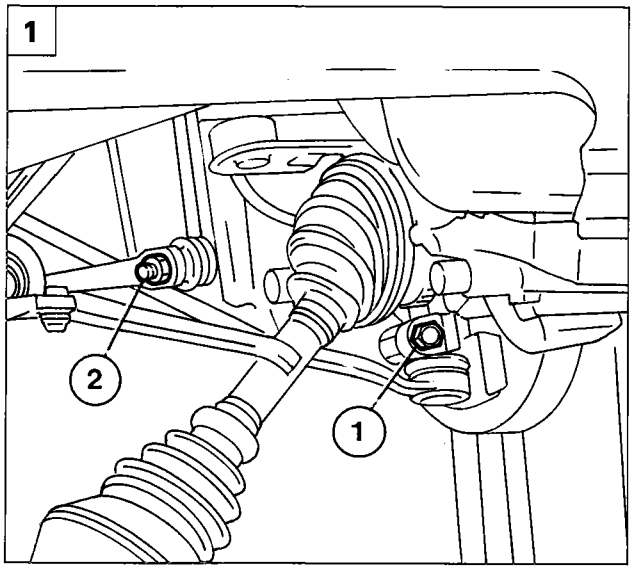

P4F065B01

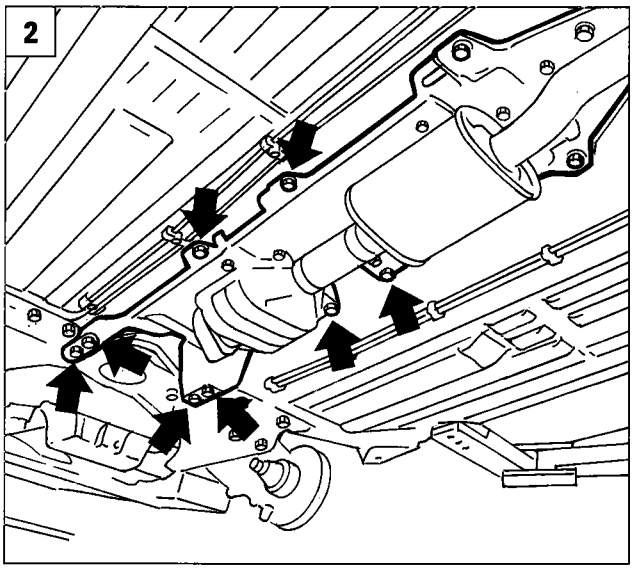

P4F066B01

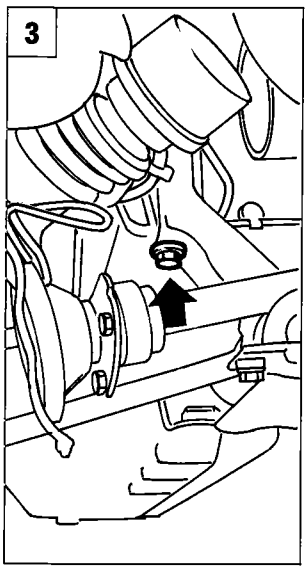

P4F066B02

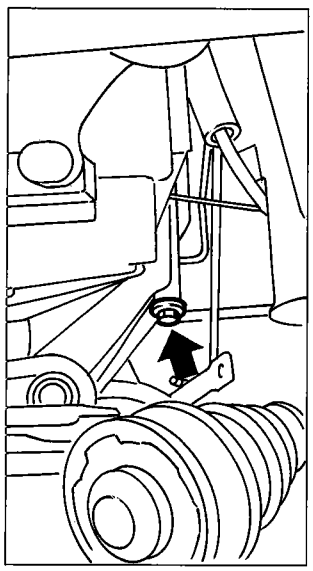

P4F066B03

1. Unscrew bolt (1) retaining the wishbone to the hub, and bolt (2) retaining the anti-roll bar to the suspension link.
2. Remove the heat shield fastenings shown in order to allow removal of the front beam.
3. Unscrew the side bolts retaining the front beam to the body.
4. Undo the rear bolts retaining the front beam to the body and the steering box, then remove the front beam with wishbones and anti-roll bar with the aid of a second operator.
5. Disconnect the mileometer speed sensor electrical connection.

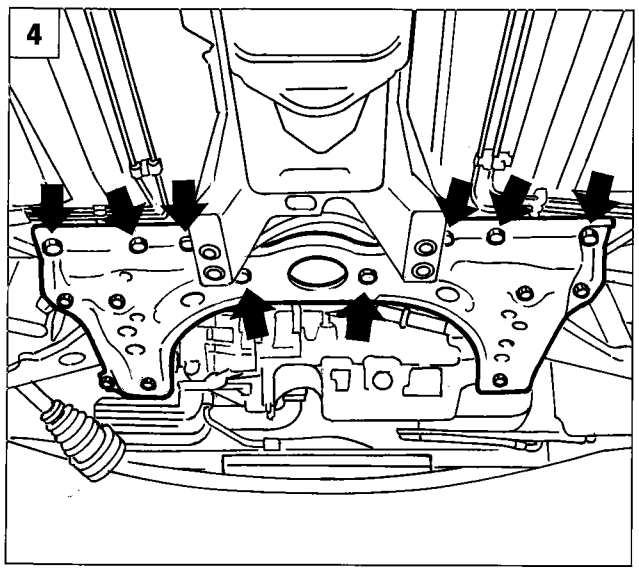

P4F066B04

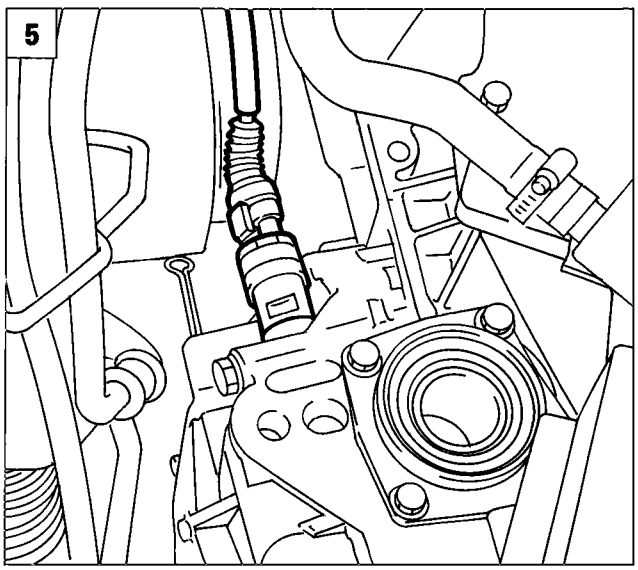

P4F066B05

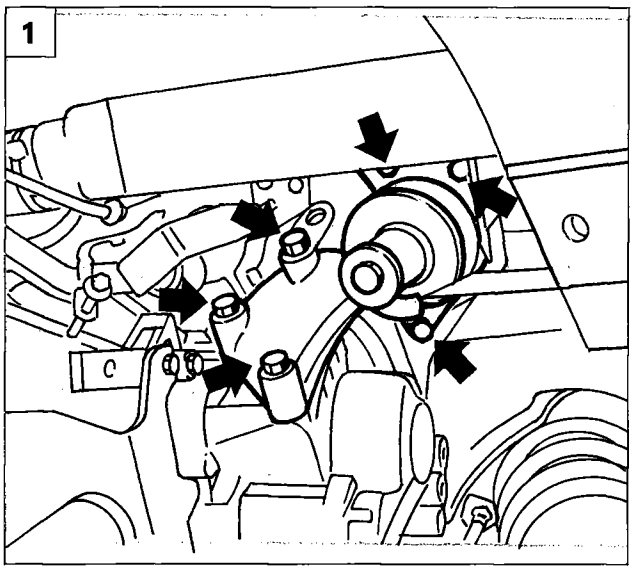

P4F068B03

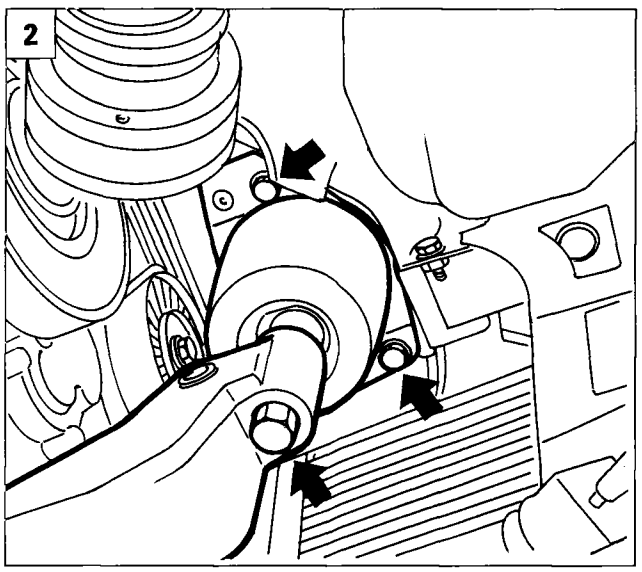

P4F11FX02

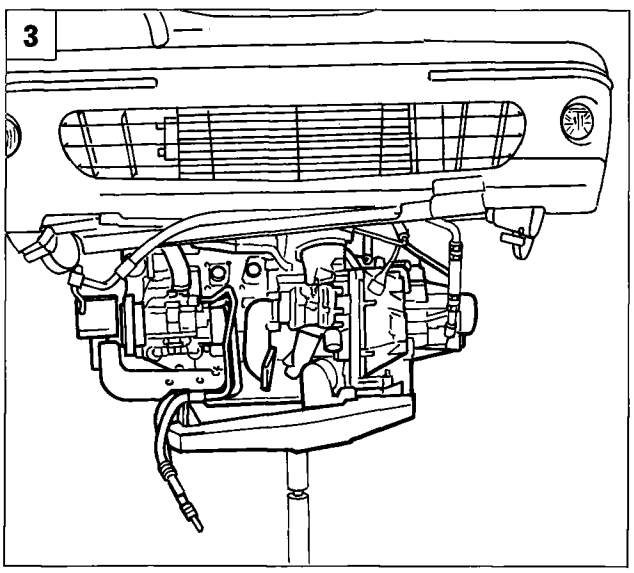

P4F11FX03

1. Remove the gearbox end engine mount by undoing the retaining bolts shown.
2. Remove the timing end engine mount.
3. Lower the hydraulic jack and remove power unit from lower part of vehicle.

Lower hydraulic jack gradually and check power unit is properly positioned and balanced on the support tool.

4. Position power unit on a platform using a hydraulic lift.

Use a hydraulic lift to move the power unit after releasing it from the support tool.

NOTE *To refit the power unit, simply reverse order of removal instructions.*

- *Prepare the engine bay to fit the power unit. Take care to connect all electrical leads, pipes etc. in order to avoid any possible hitches;*
- *Take great care not to damage individual components when the power unit is fitted*
- *When fitting the coolant lines, align groove on rubber hose with ridge on associated rigid sleeve. When filling the cooling system, refer to section on "Removing-refitting radiator".*

Ensure that the power unit mounting points are properly secured.

Clutch pedal height.

10.

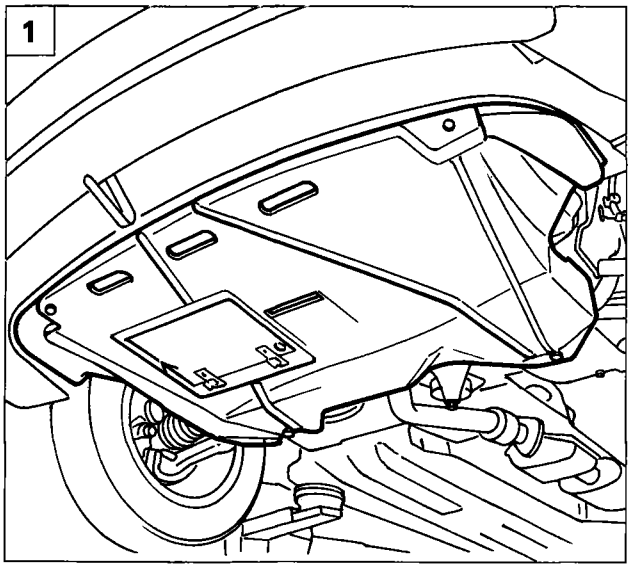

P4F003B01

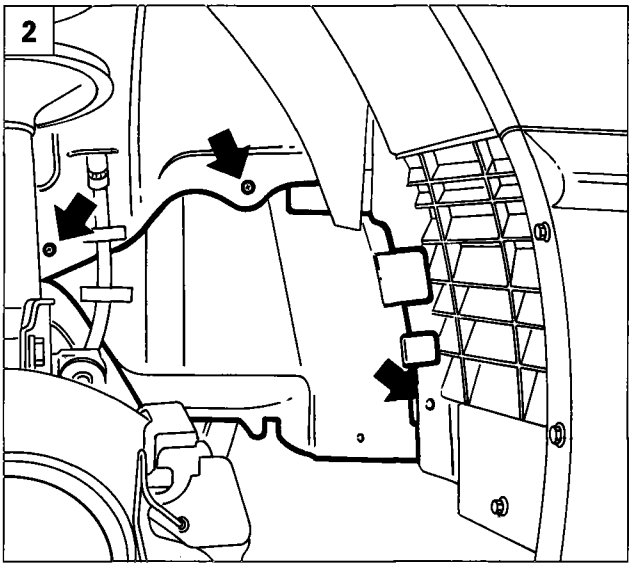

P4F10CX02

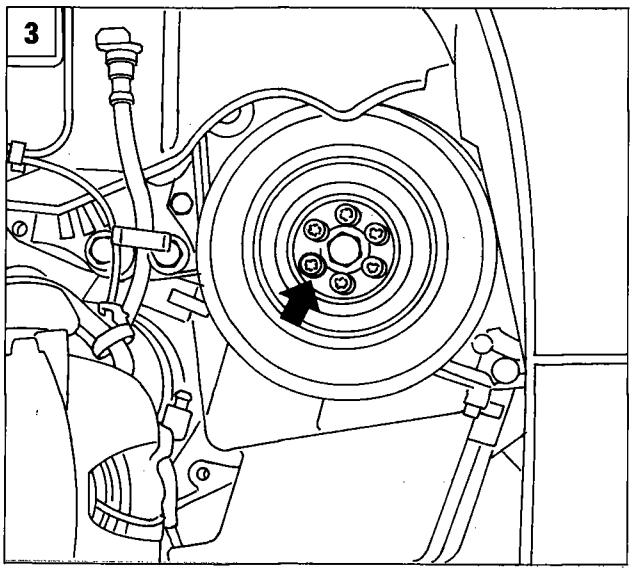

P4F12FX05

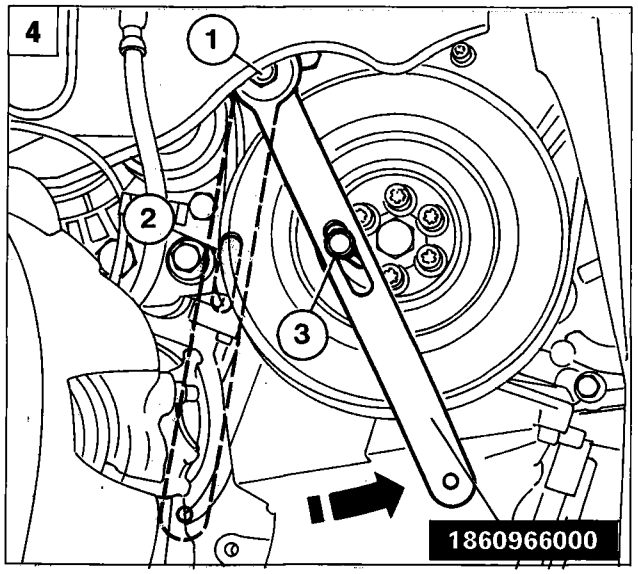

P4F12FX06

REMOVING AUXILIARY BELT

Place the vehicle on a lift, disconnect the battery negative termina, remove the right front wheel, then proceed as follows.

1. Raise the lift and remove the lower power unit protection.
2. Use tool 1878077000 to undo the stud, unscrew bolts and release the dust shield from its seat.
3. Unscrew retaining bolt shown in order to position the belt tensioning tool.
4. Use wrench 1860966000 to loosen belt tension by turning automatic tension nut (1) anticlockwise until wrench slot (2) is aligned with hole (3) on the pulley, then lock the tool in position using a service bolt.

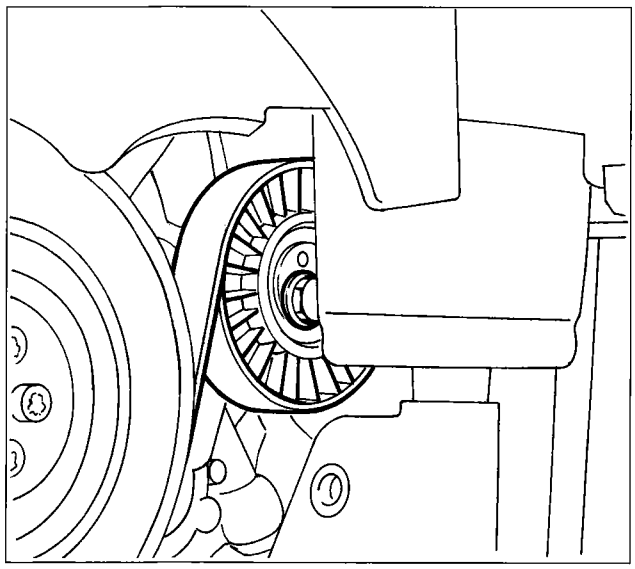

P4F13FX01

1. Loosen tension in mobile pulley by undoing the retaining bolt. Then prise off the auxiliary drivebelt.

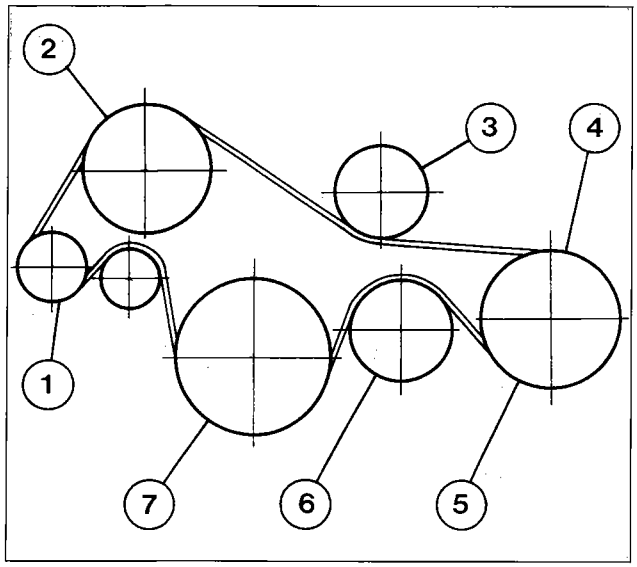

P4F13FX04

REFITTING AUXILIARY COMPONENT BELT

2. Fit the auxiliary component belt to obtain the configuration shown:

   1. Alternator
   2. Power steering pump
   3. Fixed guide pulley
   4. Air conditioner compressor pulley
   5. Mobile guide pulley
   6. Crankshaft pulley
   7. Automatic tensioner

Check the condition and efficiency of the auxiliary component drive belt. In particular, check for cracks, tears, surface wear and dry or hard parts, which could lead to loss of grip.

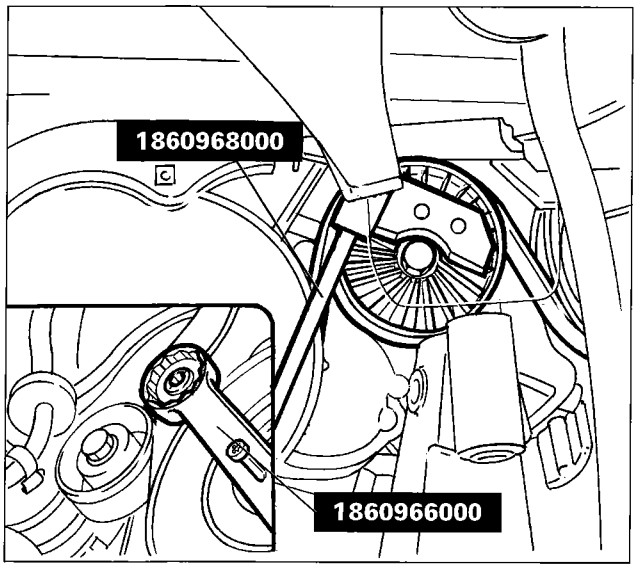

P4F13FX05

3. Position tool 1860968000 on the mobile pulley (left free to move) and align with the specific holes, turn the lever and adjust belt tension. Tighten the mobile pulley retaining bolt in this position.

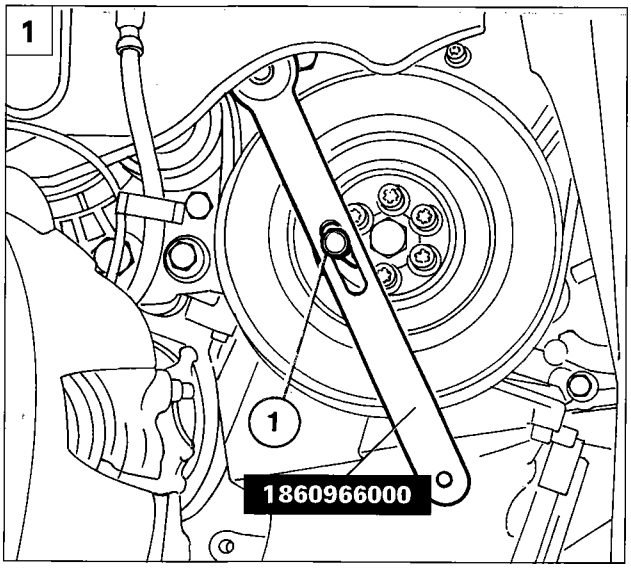

P4F14FX05

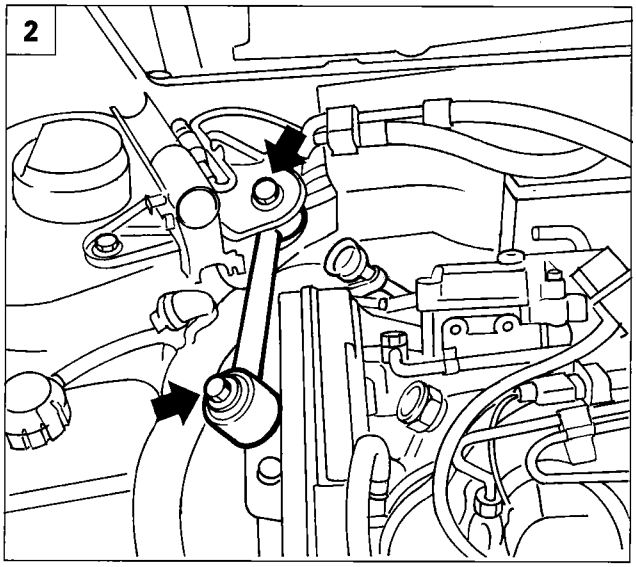

P4F06FX01

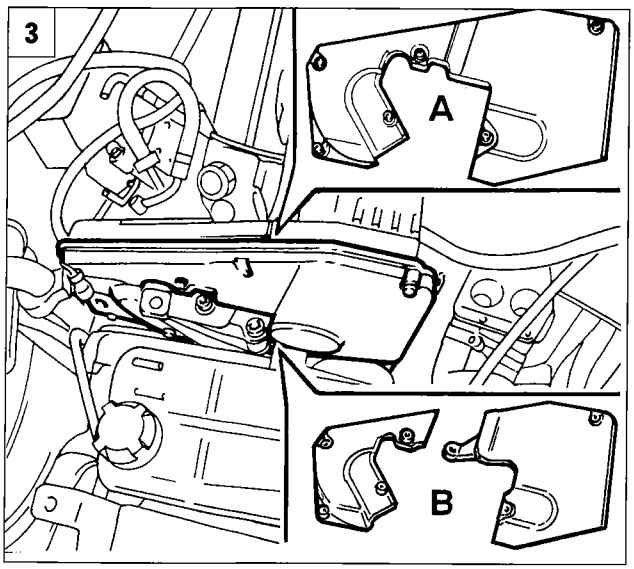

P4F14FX06

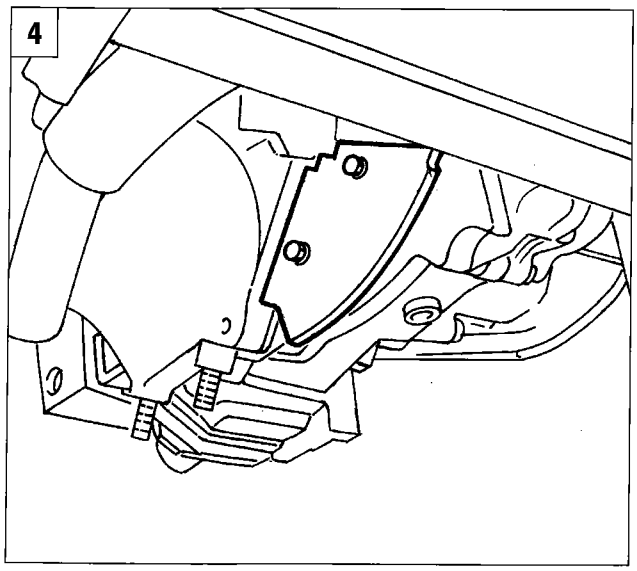

P4F14FX04

1. Unscrew screw (1) and remove wrench 1860966000, then reposition the pulley retaining bolt and tighten to the specified torque. The preloaded automatic tensioner spring will ensure belt tension is correct.

REMOVING TIMING BELT

Before removing the timing belt, it is necessary to remove the auxiliary belt as described in the previous paragraph.

2. Remove the reaction rod from the mount bracket by undoing the retaining bolts shown.
3. Remove the upper timing belt guard (Fig. A)
   From engine no. 0000424550 remove the two upper belt guards (Fig. B).
4. Unscrew bolts shown and remove the guard from the gearbox.

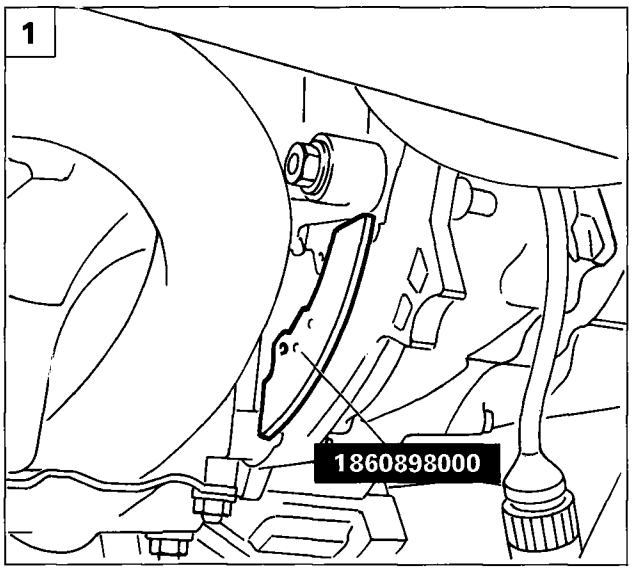

P4F15FX01

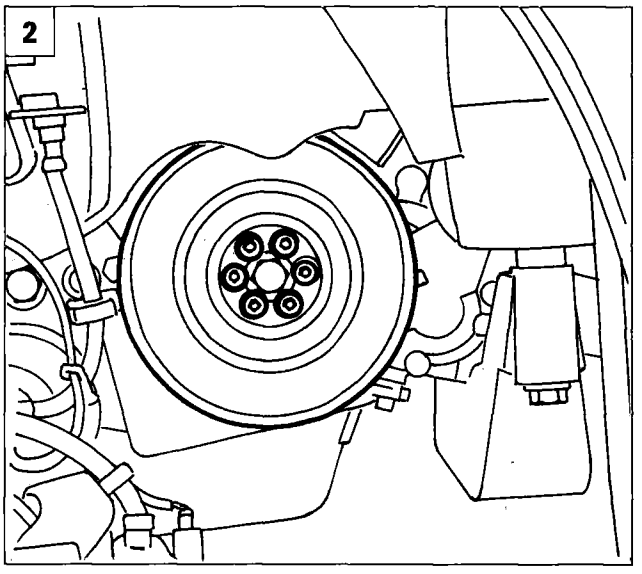

P4F15FX02

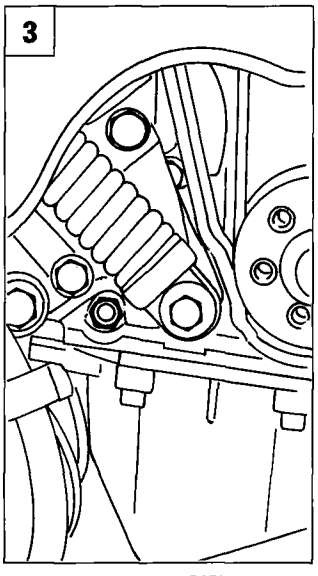

P4F15FX03

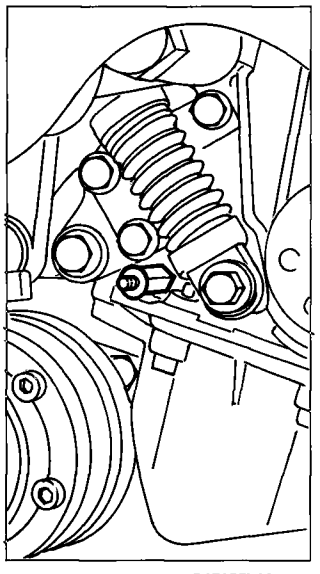

P4F15FX04

1. Position the flywheel retaining tool 1860898000.
2. Remove the auxiliary component pulley and the flywheel retainer 1860898000.
3. Remove the oil pump retaining bolt shown; position pin of tool 1860905000 in the place of the bolt.
4. Position tool 1860905000 on the crankshaft gear and pin (3); turn the crankshaft through small movements until locating dowel (2) slides into hole (1). In this position, the first cylinder is set to T.D.C.
5. Check that the injection pump timing is correct. Check hat references (1) and (2) shown are aligned and then lock the pulley in timing position by fitting screws (3) into the holes on the pulley.

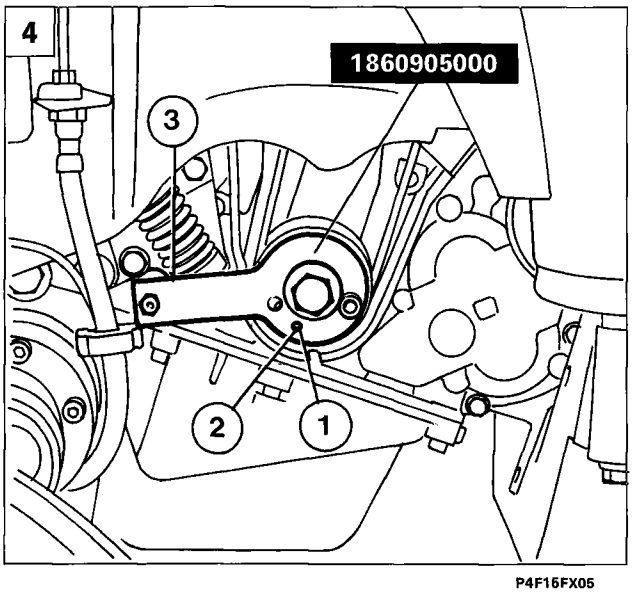

P4F15FX05

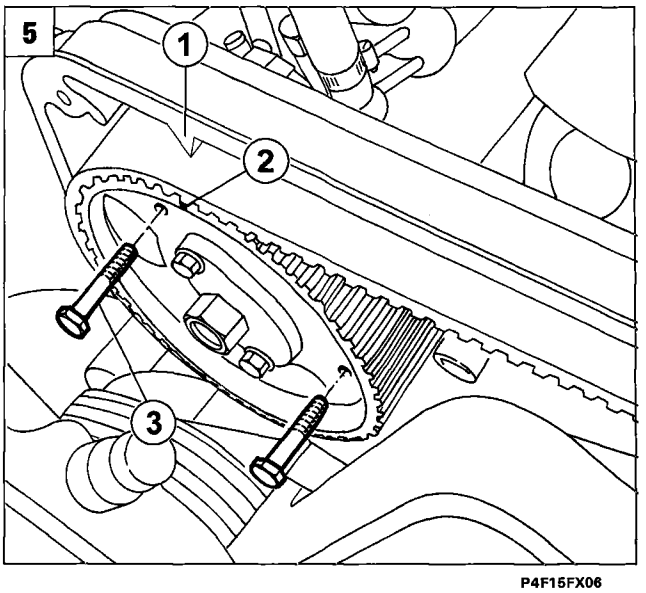

P4F15FX06

10.

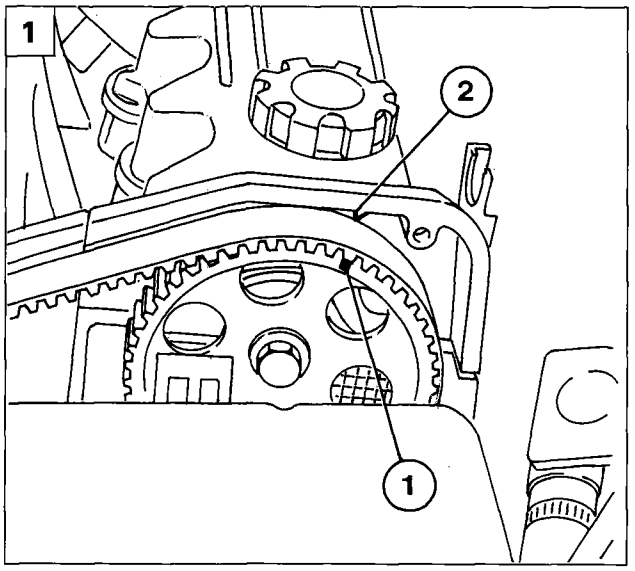

P4F16FX01

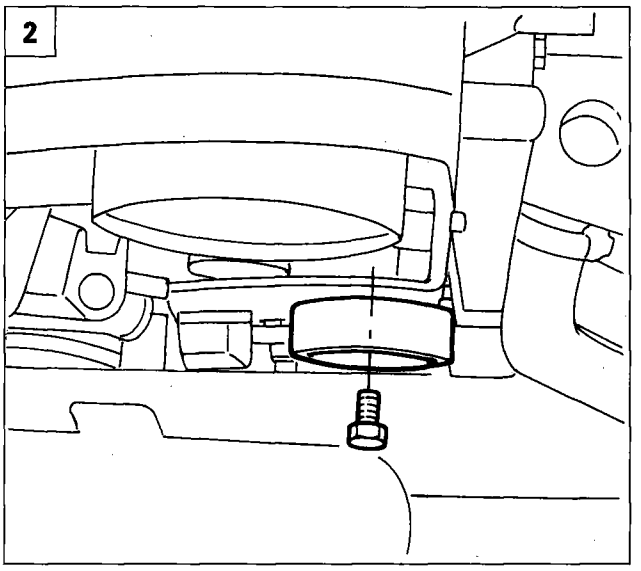

P4F16FX02

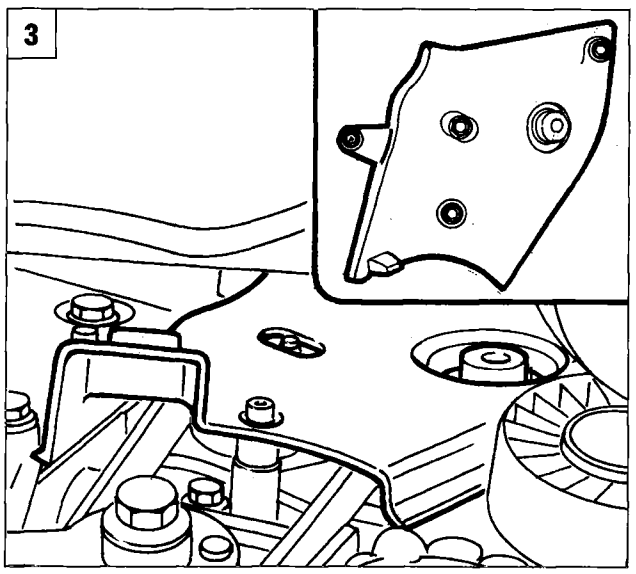

P4F16FX03

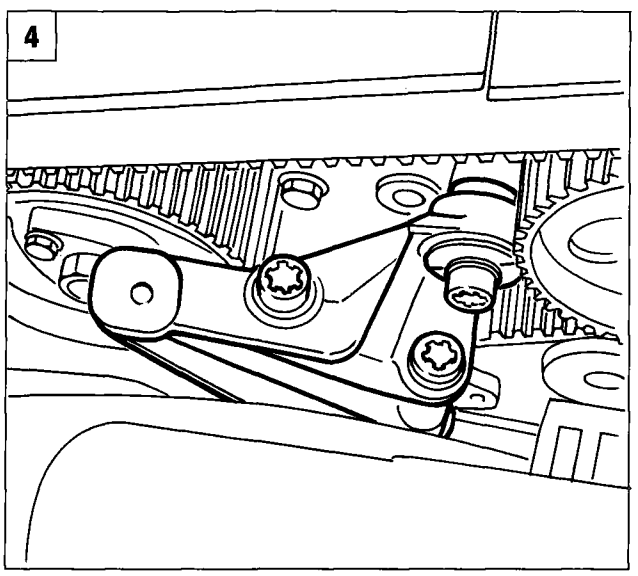

P4F16FX04

1. Check that reference (1) of the timing pulley is aligned with reference (2) located on the cam cover.
2. Use a wrench of appropriate size to remove the auxiliary component belt fixed pulley.
3. Remove the lower timing belt guard.
4. Unscrew the retaining bolts shown in the figure and remove the reaction rod mount.

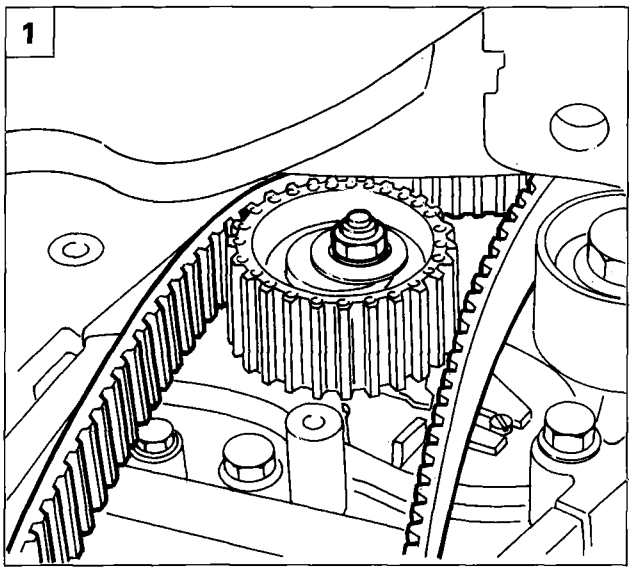

P4F17FX01

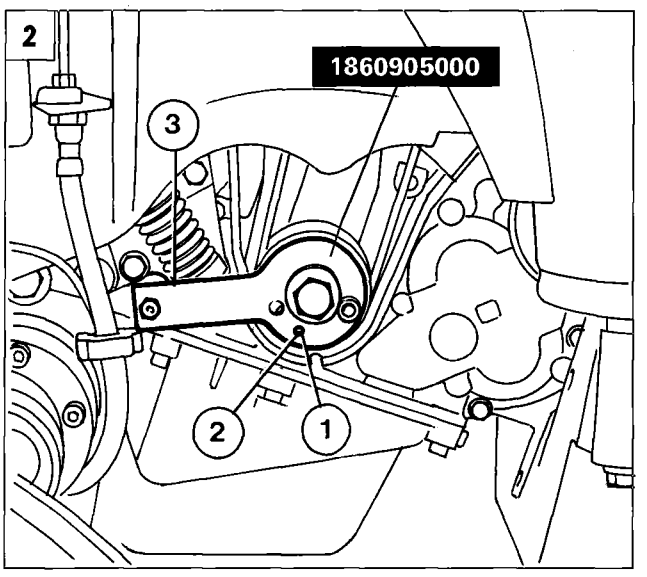

P4F15FX05

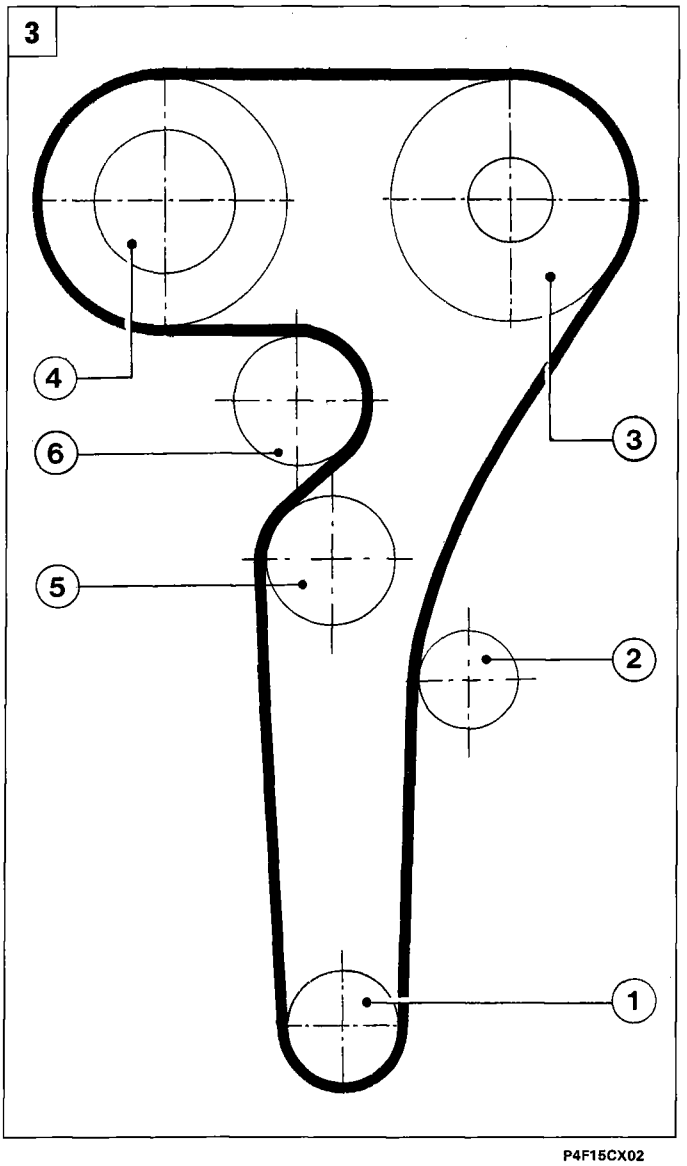

P4F15CX02

1. Loosen the belt tensioner nut, prise the belt off the injection pump and timing pulley, raise lift, position flywheel retainer 1860898000, remove tool 1860905000 preset to T.D.C. and then remove the timing belt.

REFITTING AND ADJUSTING TIMING BELT TENSION

2. Fit the toothed belt on the crankshaft gear, remove the flywheel retainer positioned previously and fit tool 1860905000 to record T.D.C.

3. Finish fitting the toothed belt by following these instructions in order:

   1. Crankshaft gear
   2. Fixed guide pulley
   3. Timing pulley
   4. Injection pump pulley
   5. Automatic tensioner
   6. Coolant pump

Copyright Fiat Auto

10.

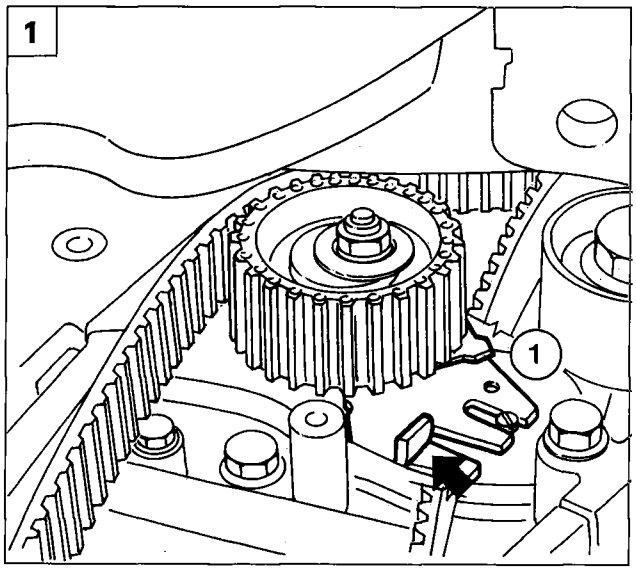

P4F18FX01

1. Apply a force at the point indicated on the automatic tensioner to put the tensioner mobile indicator (1) in a position of maximum tension.

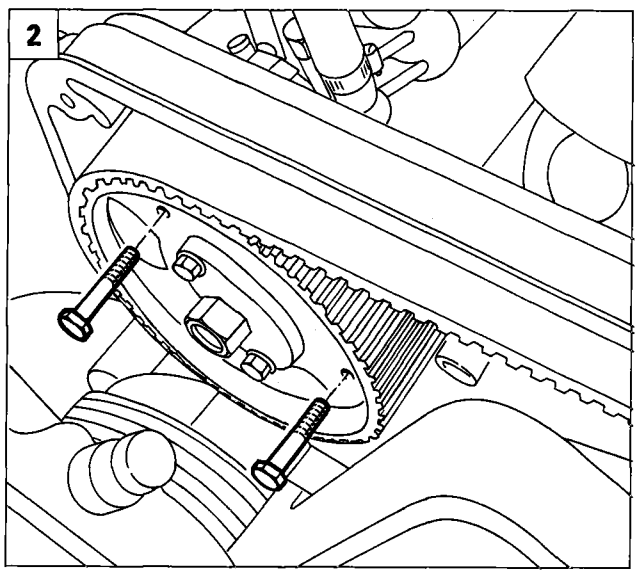

P4F18FX02

2. Release the injection pump drive pulley by undoing the two screws positioned previously.

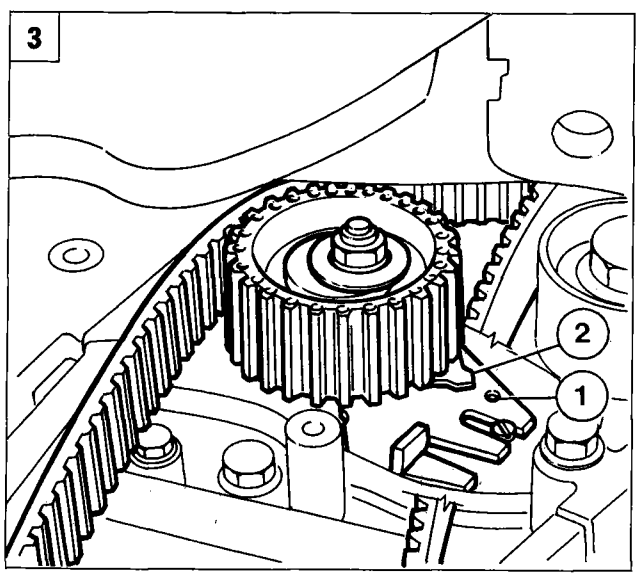

P4F18FX03

3. Turn the crankshaft through two turns in its normal direction of rotation, undo the tensioner retaining nut and align the fixed index (1) on the tensioner mount with belt tensioner mobile indicator (2). Screw in the tensioner nut and then tighten to torque. Refit the parts taken off previously in order to remove the belt.

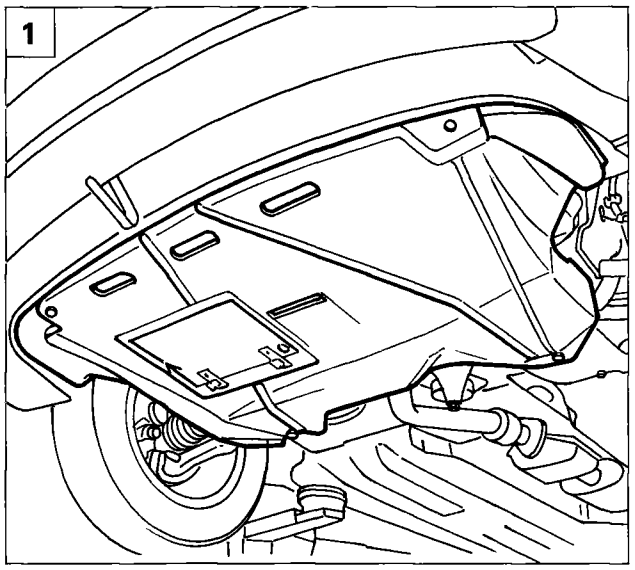

P4F003B01

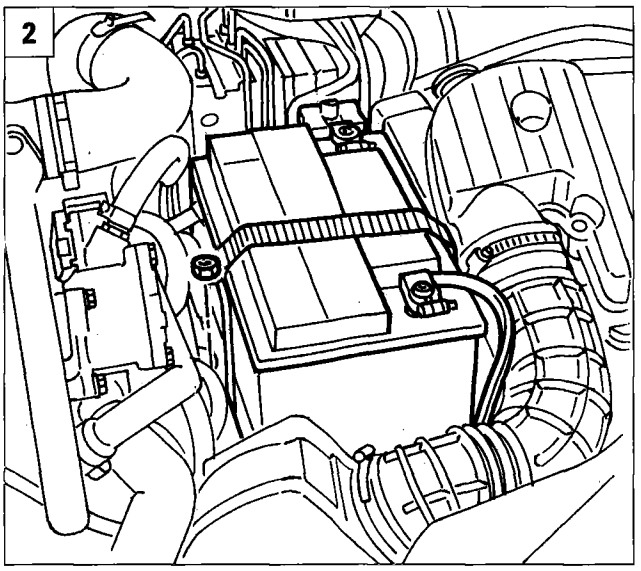

P4F060B01

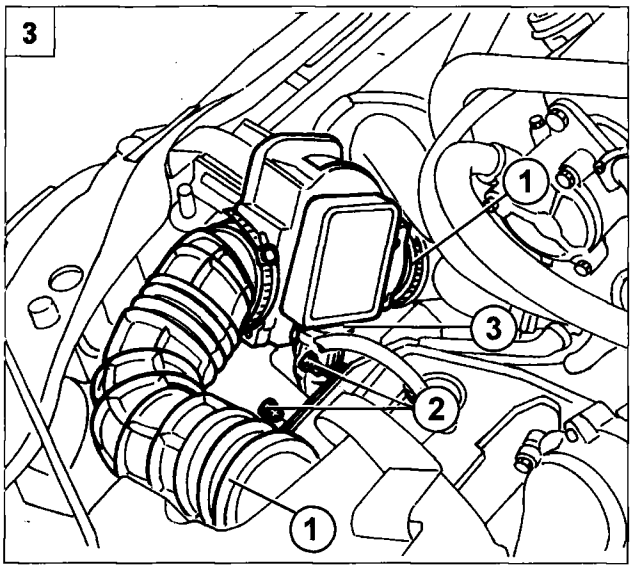

P4F060B02

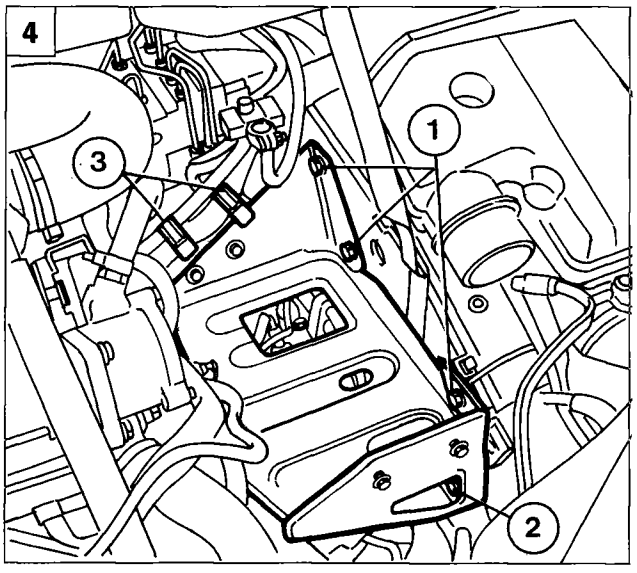

P4F060B03

REMOVING CYLINDER HEAD

Place the vehicle on a lift, remove the front wheels, disconnect the battery negative terminal and then proceed as follows.

1. Raise the lift and remove the lower power unit protection.
2. Disconnect the battery negative terminal, unscrew the bolt retaining the battery to the cradle and then remove from the engine bay.
3. Loosen the two clips (1), unscrew retaining bolts (2), disconnect connection (3), then remove the air intake sleeve together with debimeter.
4. Unscrew bolts (1), loosen bolt (2), open clips (3) to release the engine wiring, then remove the battery cradle.

10.

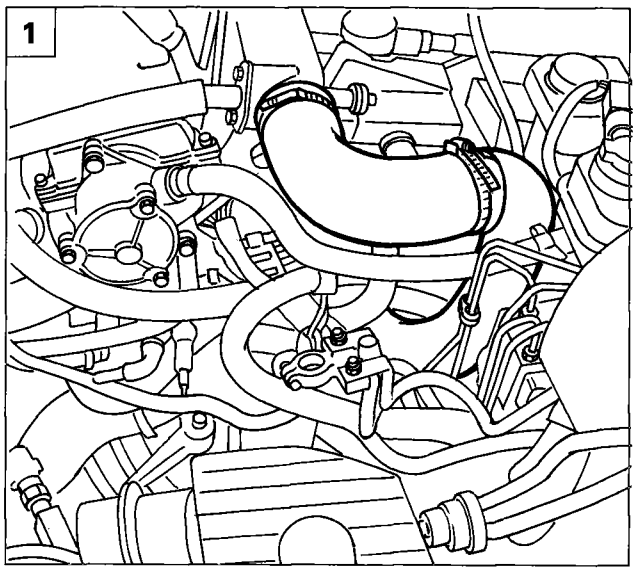

P4F060B04

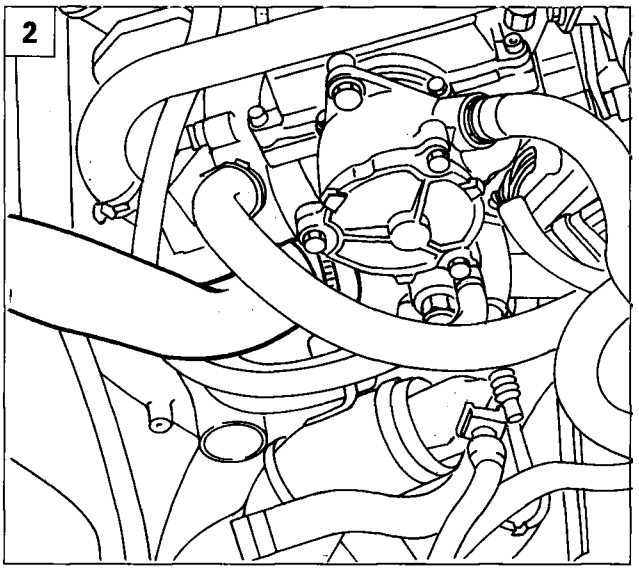

P4F02FX05

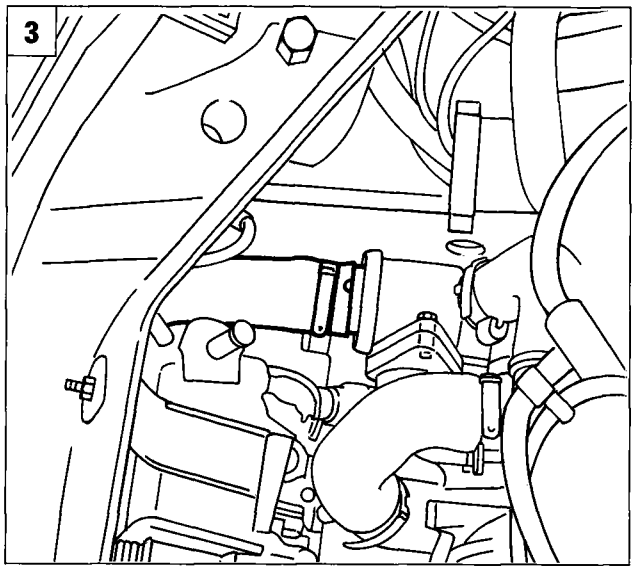

P4F03FX01

1. Loosen clips and remove the sleeve shown.
2. Position a suitable container to recover the engine coolant and then remove the coolant intake sleeve from the points shown.
3. Remove the coolant outlet sleeve from the point shown.
4. Remove lines leading from the heater unit and both coolant lines shown from the thermostat and disconnect both electrical connections shown.
5. Disconnect the lines shown from the expansion tank.

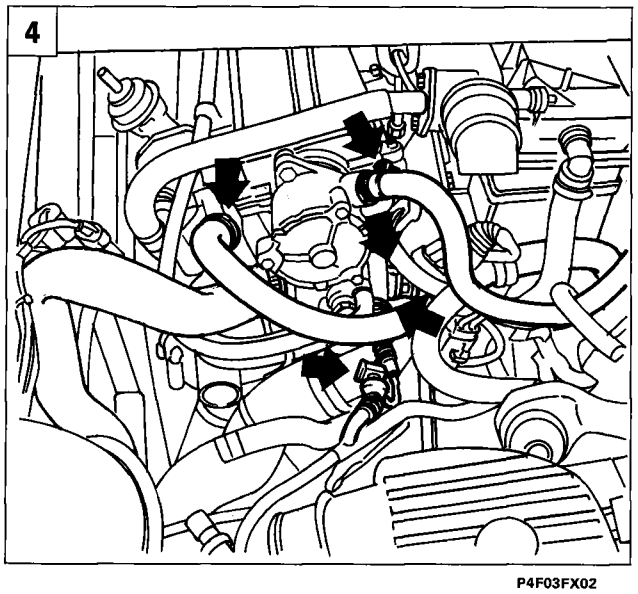

P4F03FX02

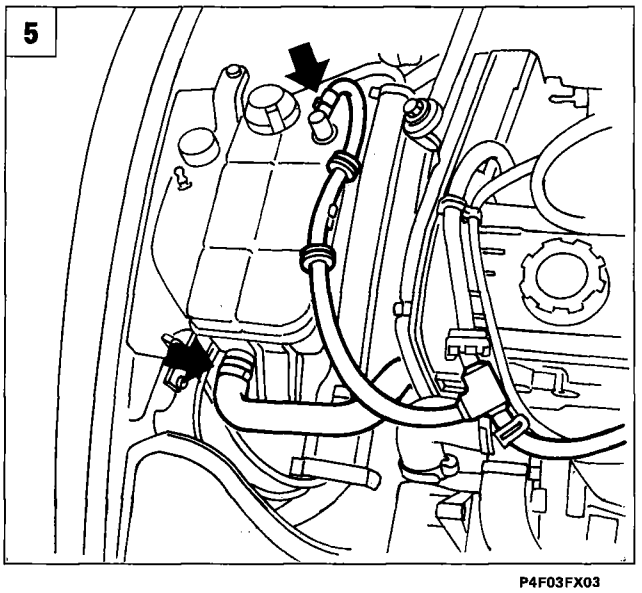

P4F03FX03

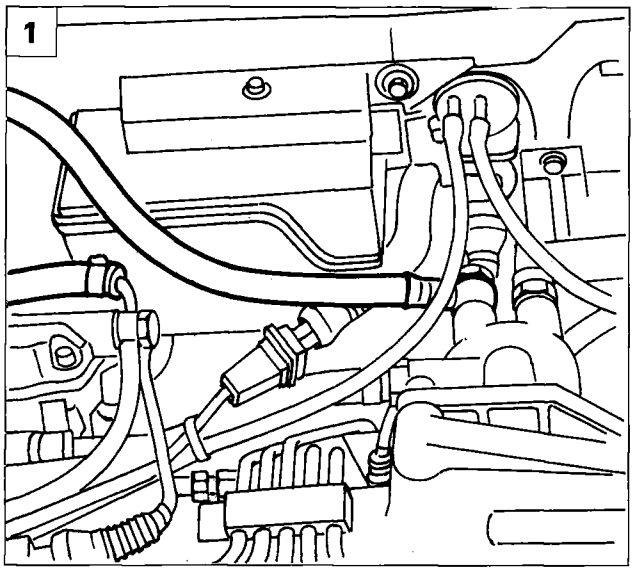

P4F03FX04

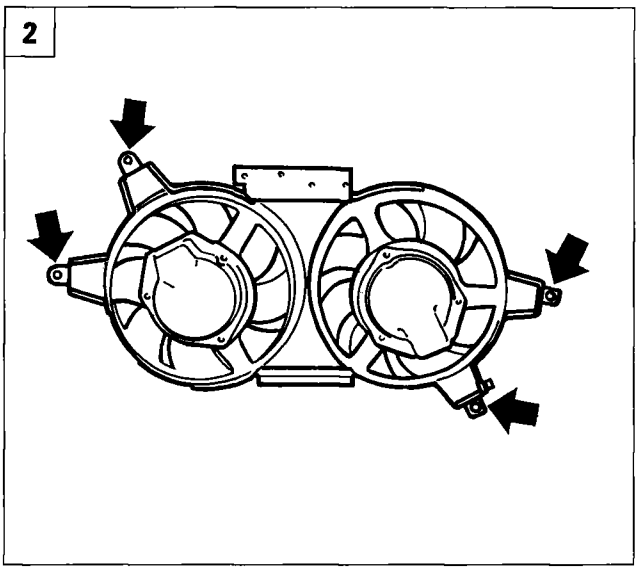

P4F03FX05

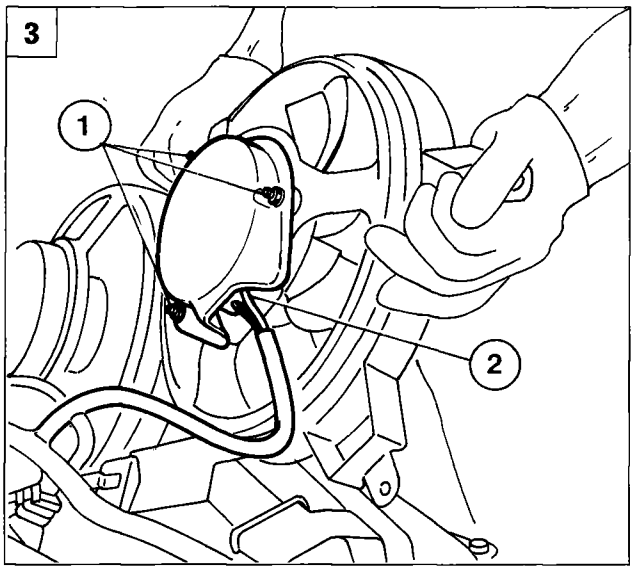

P4F04FX01

1. Disconnect the two fuel inlet and outlet lines.
2. Unscrew the bolts fastening the fan.
3. Loosen bolts (1) retaining both heat shields, raise, disconnect connections (2), repeat the operation on the other cover, then remove the fan.
4. Disconnect both pipes from the modulator solenoid and the electrical connection.
5. Disconnect electrical connections shown.

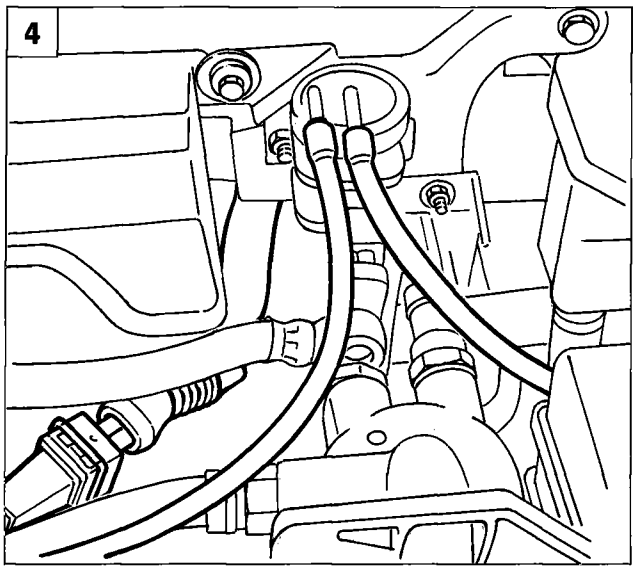

P4F04FX05

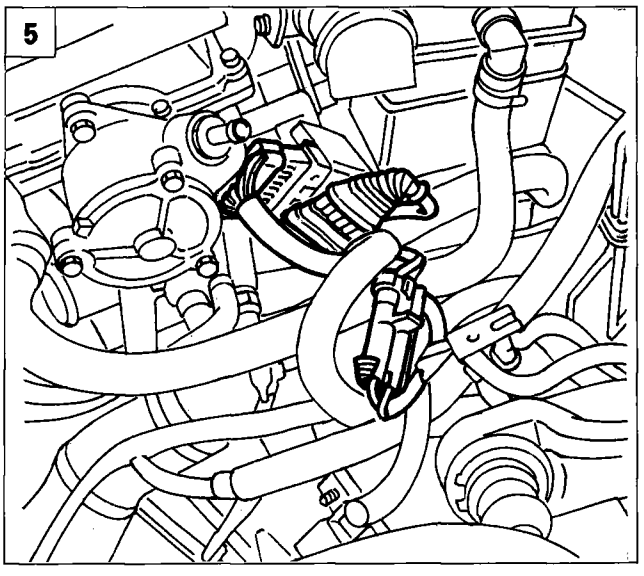

P4F05FX02

10.

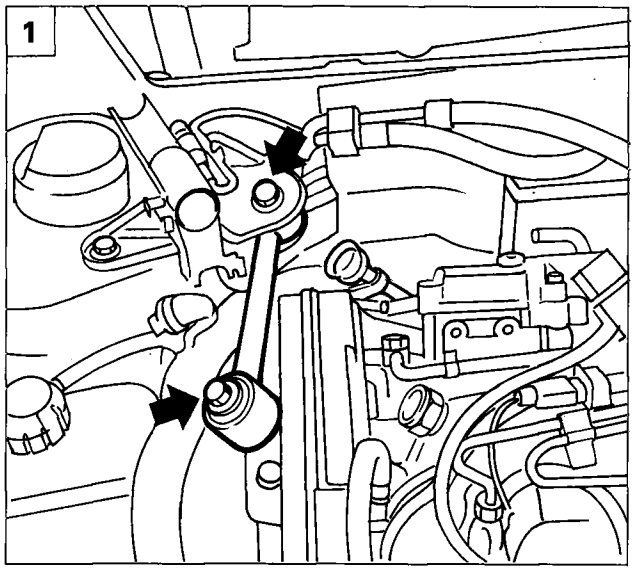

P4F06FX01

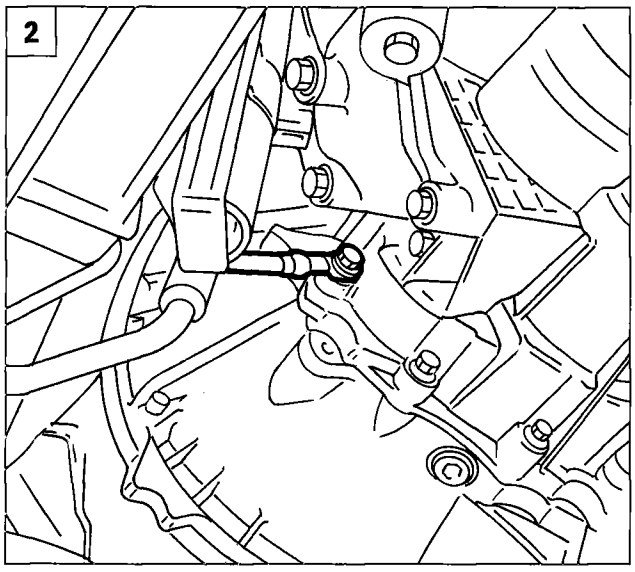

P4F063B01

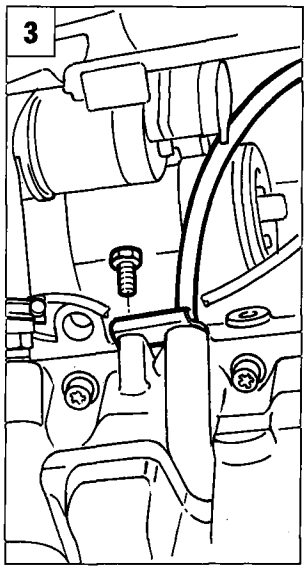

P4F067B01

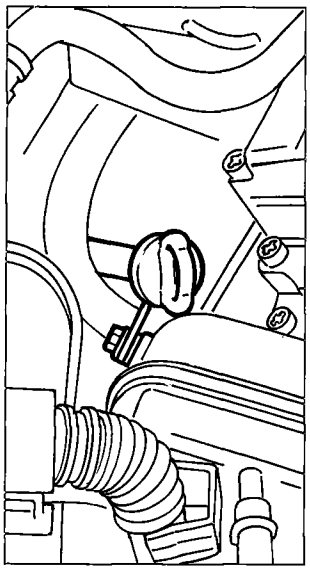

P4F067B02

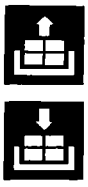

1. Remove the reaction rod from the support bracket by undoing the retaining screws shown.
2. Disconnect the engine earth shown from the gearbox bell housing.
3. Undo the lower bolt and upper bolt retaining the oil dipstick and remove.
4. Disconnect the diesel return lines shown from the injectors and injection pump.

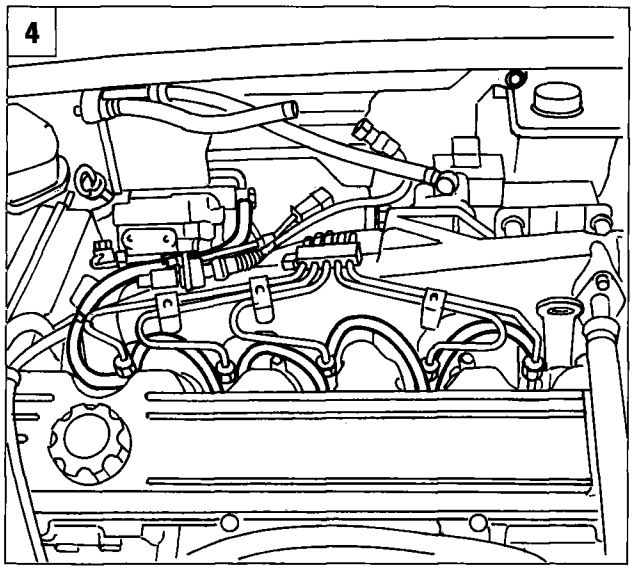

P4F22FX05

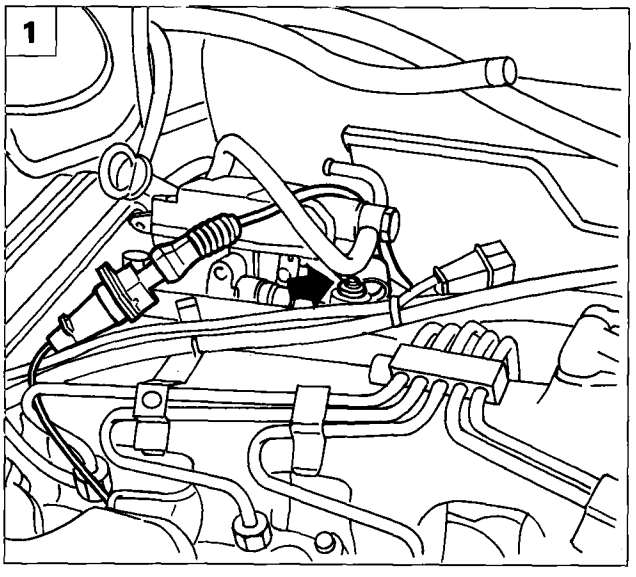

P4F23FX01

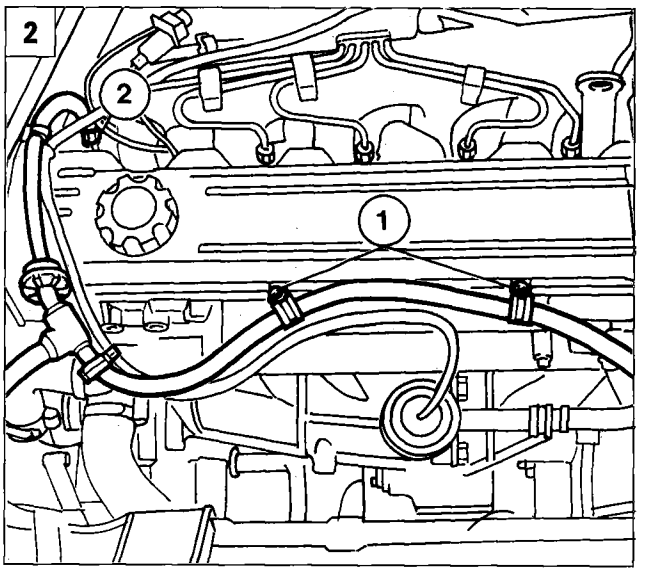

P4F23FX02

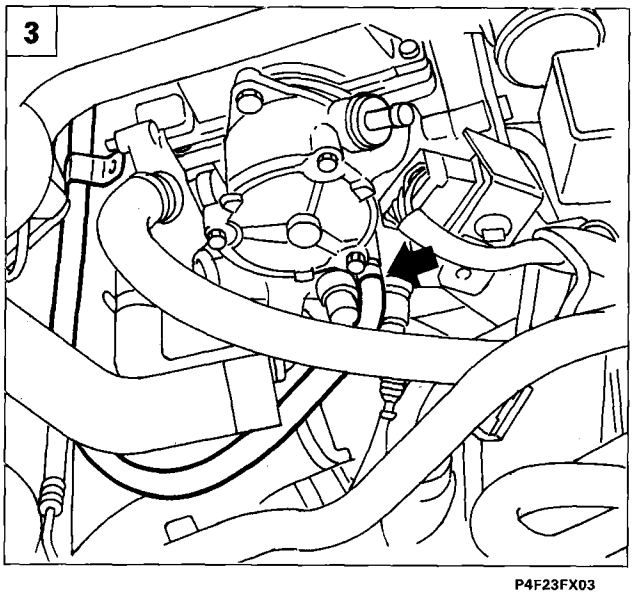

P4F23FX03

1. Disconnect electrical connection of the injector with controls, and disconnect the earth lead from the injection pump by undoing the nut shown.
2. Disconnect the pipe shown from the cylinder head, remove bolts (1) and loosen clip (2).
3. Disconnect the clip shown and put the side pipe to one side in the engine bay.
4. Disconnect the fuel delivery line to the injection pump from the fuel filter.
5. Use wrench 1852138000 to unscrew the fittings of the diesel lines on the injectors.

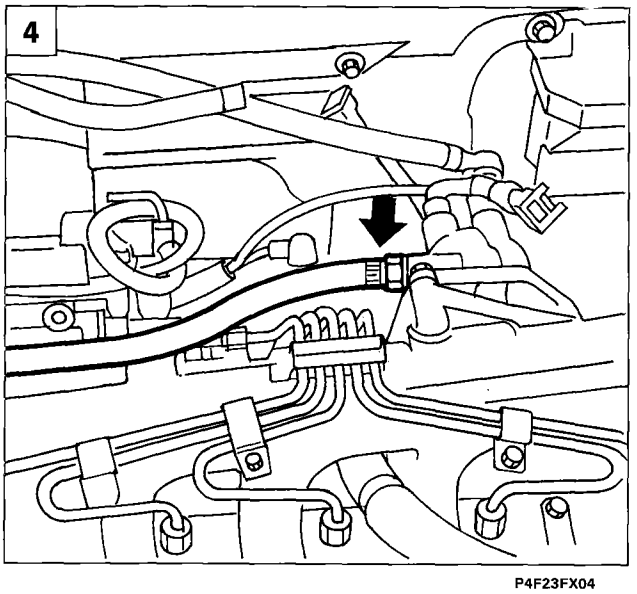

P4F23FX04

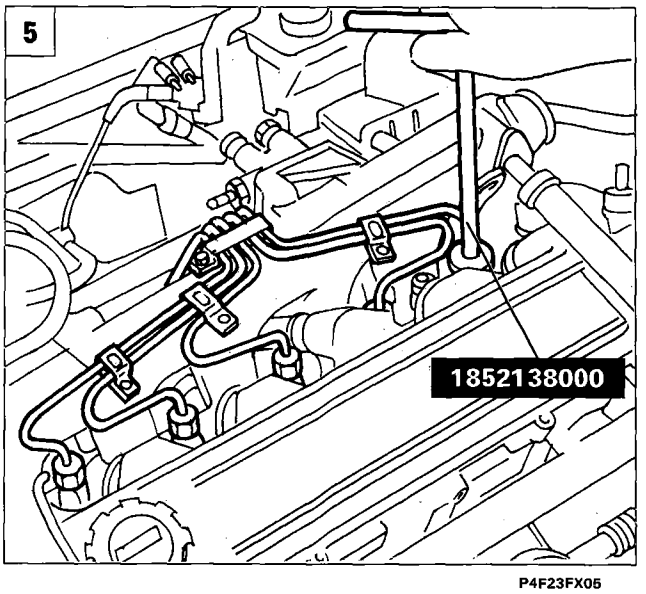

P4F23FX05

10.

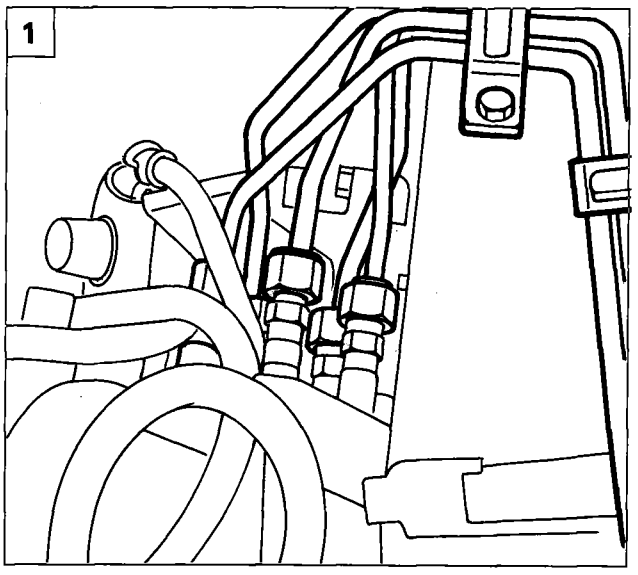

P4F24FX01

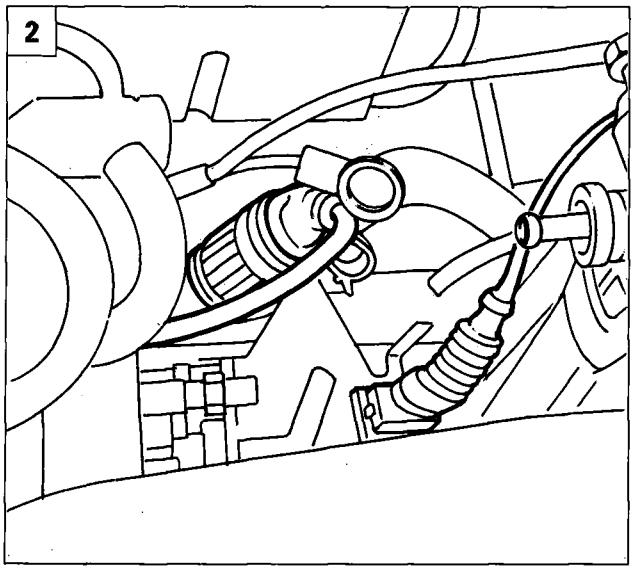

P4F24FX02

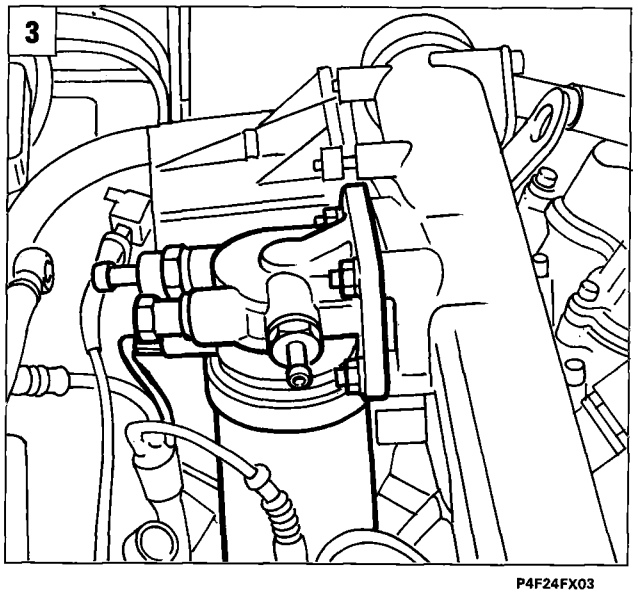

P4F24FX03

1. Unscrew the fittings of the diesel supply lines from the pump, then remove the lines.
2. Disconnect both electrical connections shown.
3. Disconnect electrical connection from filter, undo nuts retaining the diesel filter to the intake manifold and then remove the filter.
4. Loosen clip (1), disconnect pipe (2), unscrew nuts (3), then place the oil vapour separator (4) to one side.
5. Remove the bracket from the injection pump by unscrewing the bolts shown. These bolts also secure the injection pump to the mount.

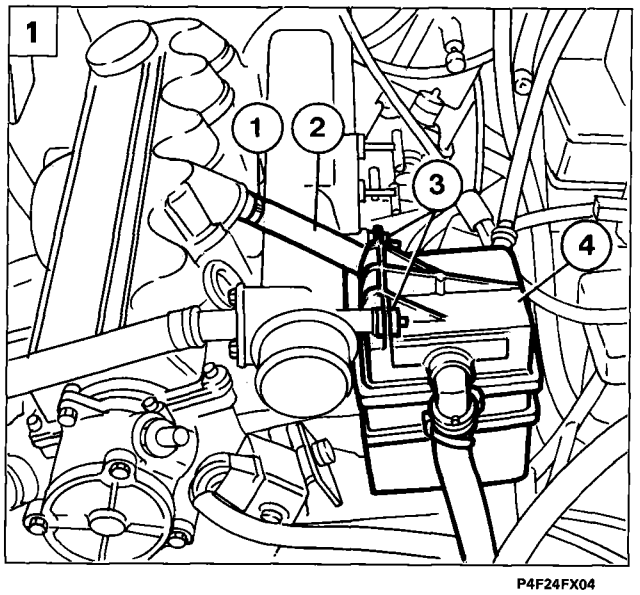

P4F24FX04

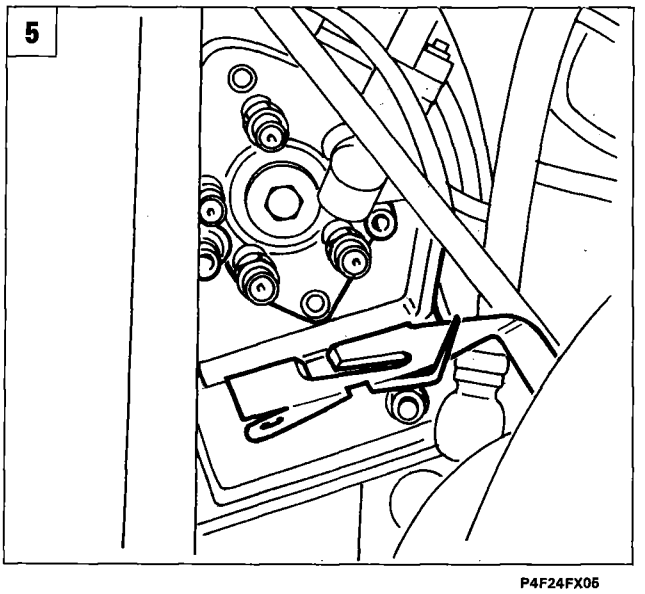

P4F24FX05

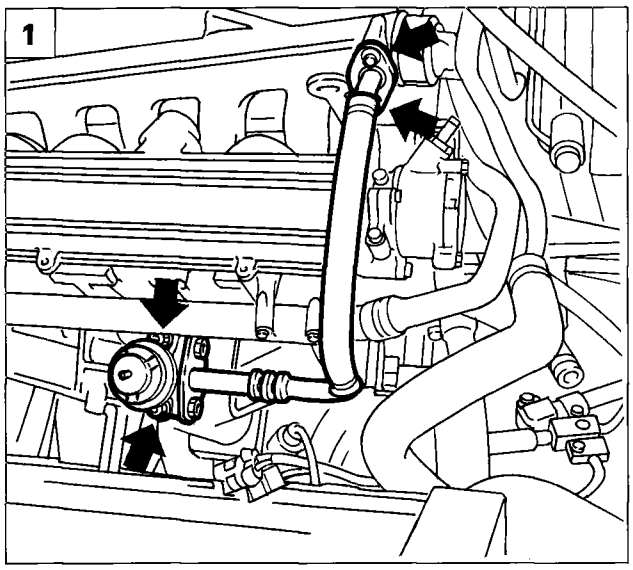

P4F25FX01

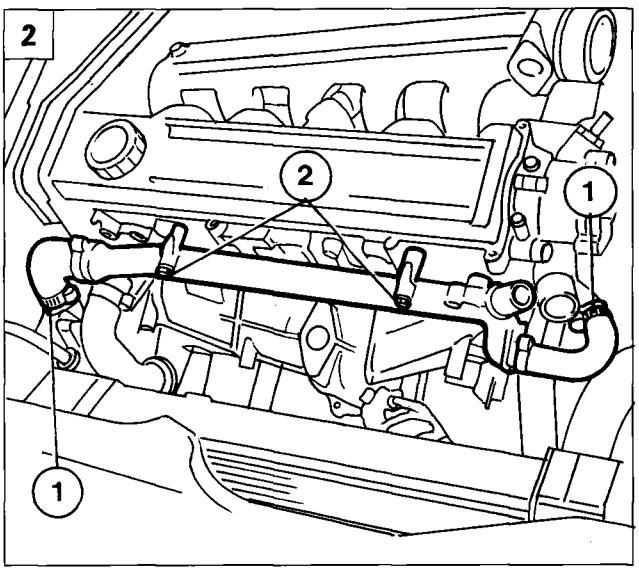

P4F25FX02

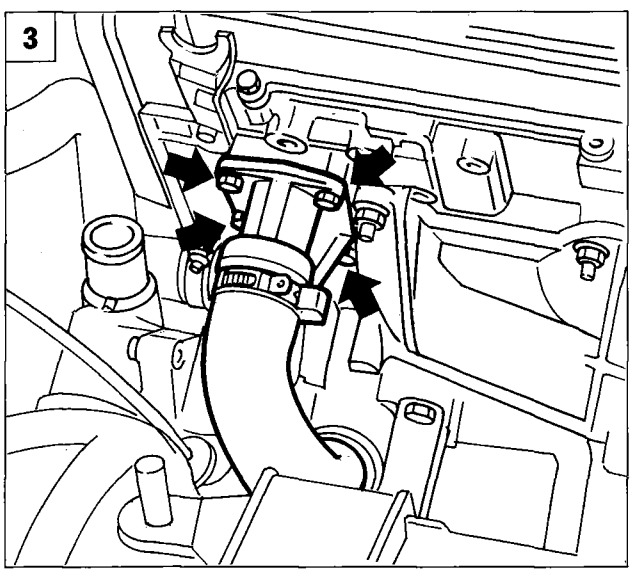

P4F25FX03

1. Remove the E.G.R. valve. complete with lines.
2. Loosen clips (1), unscrew bolts (2), then remove rigid engine coolant pipe from the cylinder head.
3. Unscrew the bolts fastening the coolant flexible sleeve and set to one side.

Remove the auxiliary component and timing belt as described in previous paragraphs.

4. Remove the antivibration bracket from the first exhaust pipe section.
5. Remove the cover from the cylinder head.

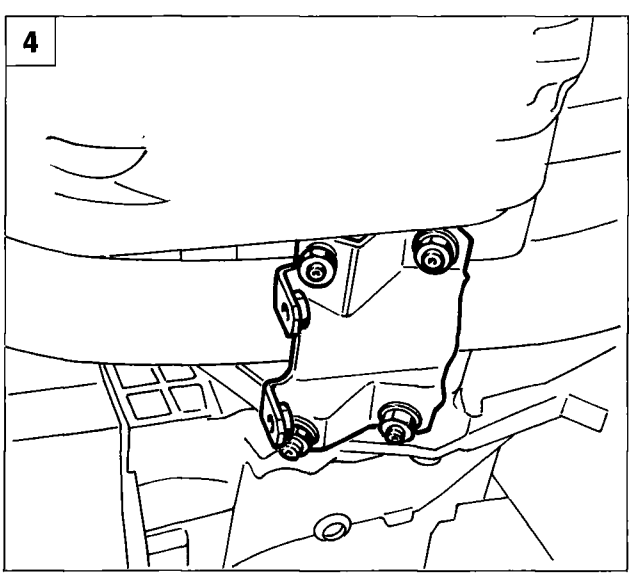

P4F25FX04

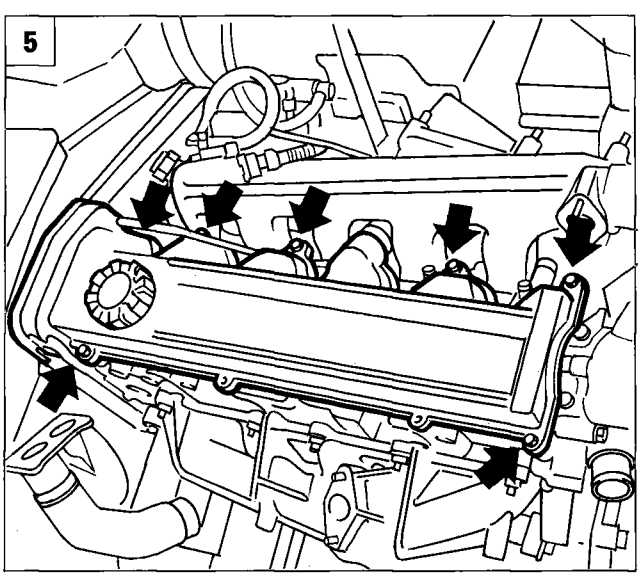

P4F25FX05

10.

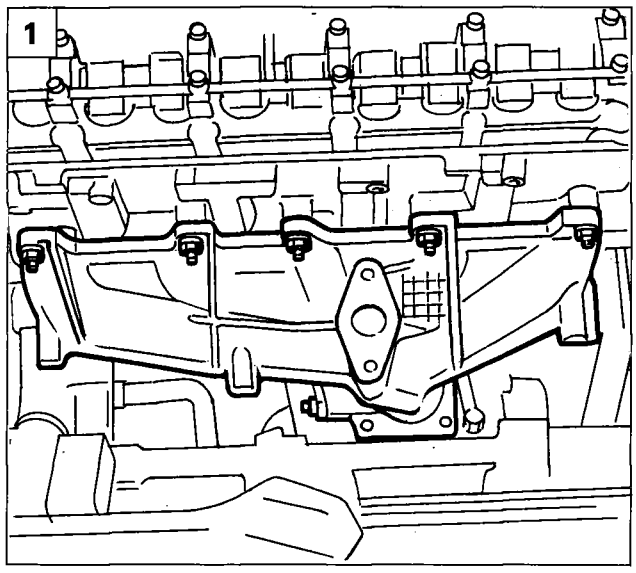

P4F26FX01

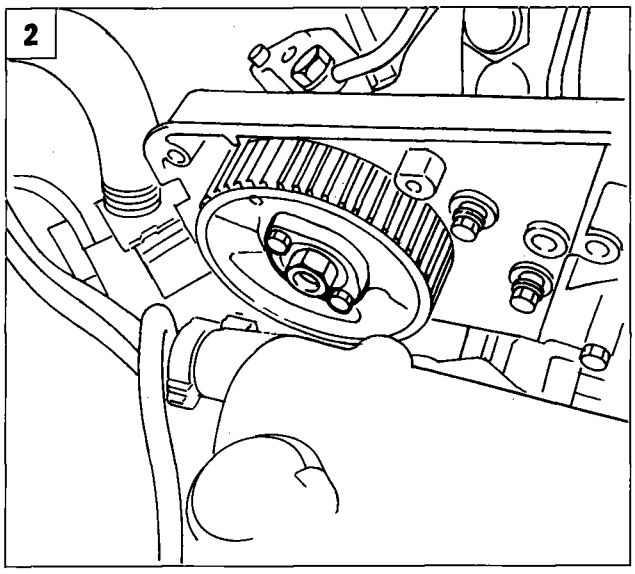

P4F26FX02

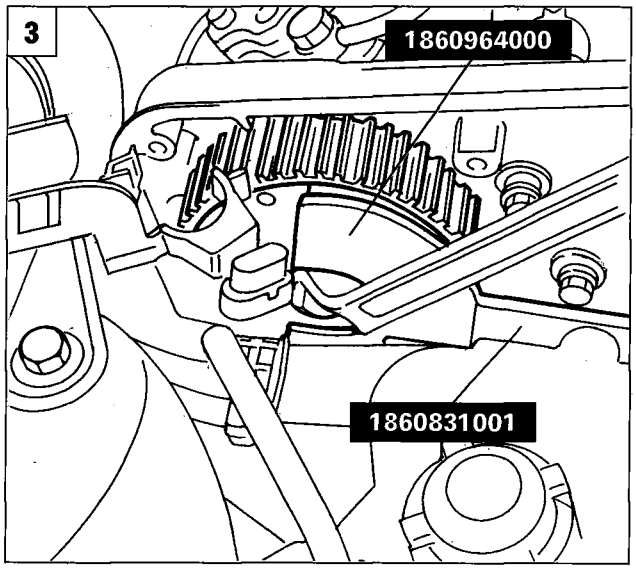

P4F26FX03

1. Undo nuts retaining the exhaust manifold to cylinder head and release the manifold from its studs.
2. Loosen nuts retaining the flange to the injection pump pulley.
3. Use tool 1860831001 and 1860964000 to release the injection pump pulley retaining nut and then remove from its seat.
4. Unscrew the bolts fastening the injection pump to the mount, then remove.
5. Disconnect glow plug supply leads.

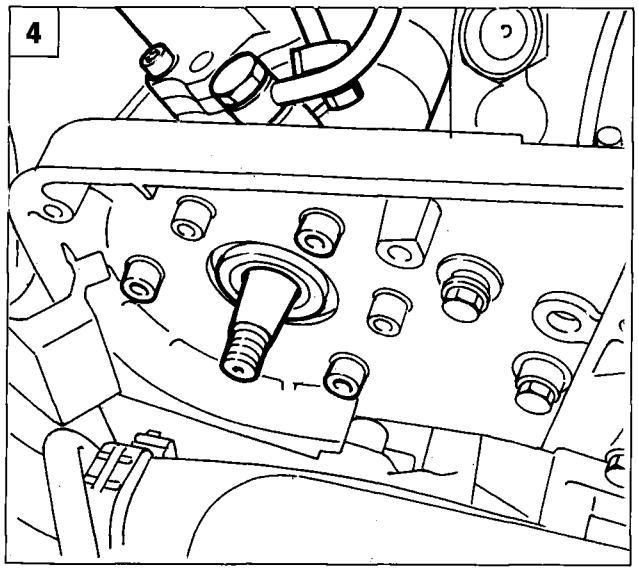

P4F26FX04

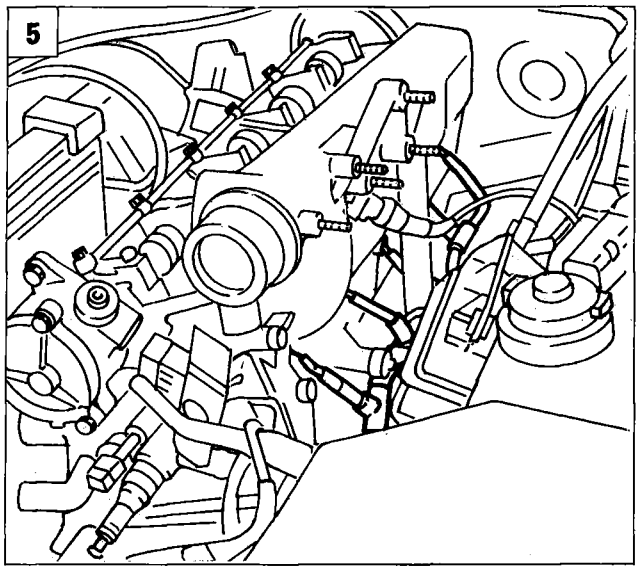

P4F26FX05

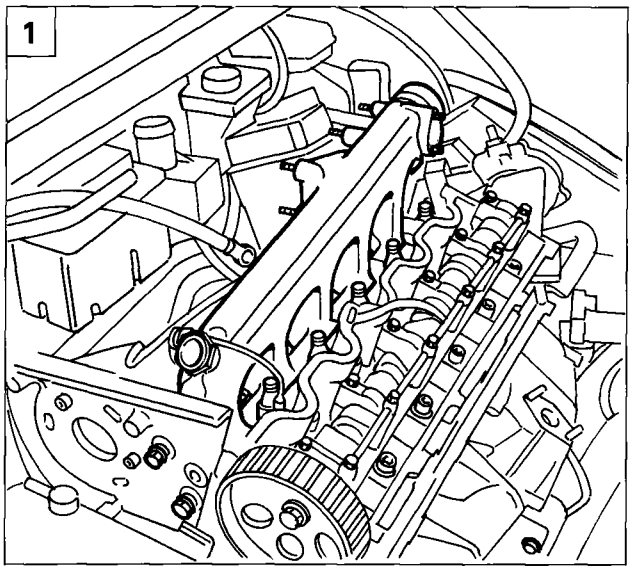

P4F27FX01

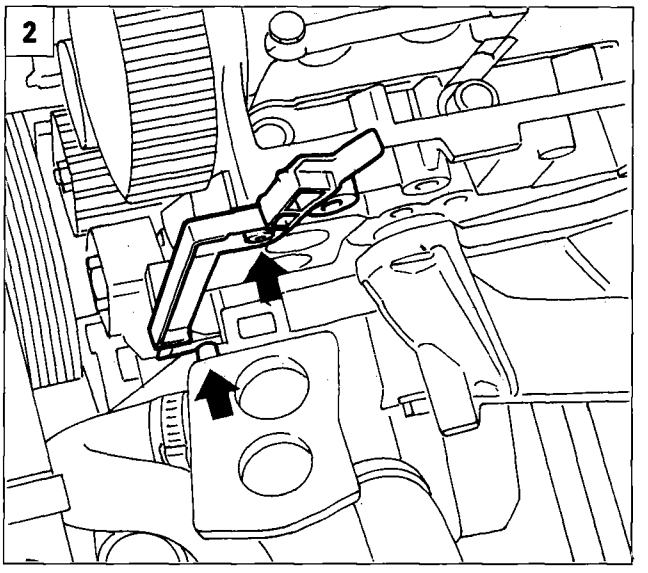

P4F27FX02

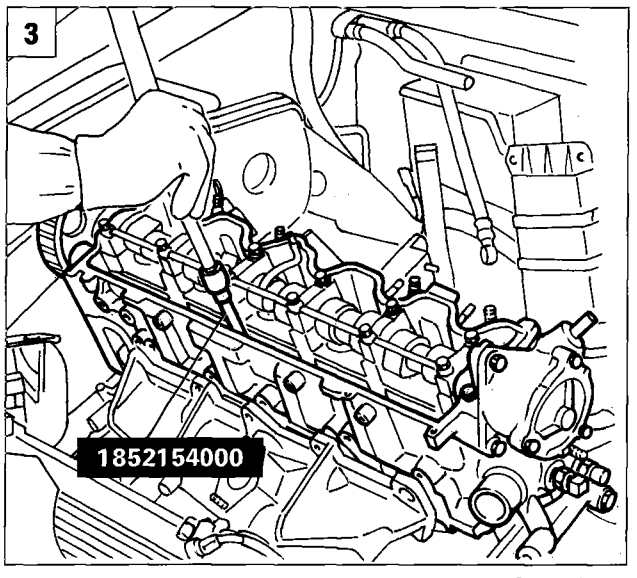

P4F27FX03

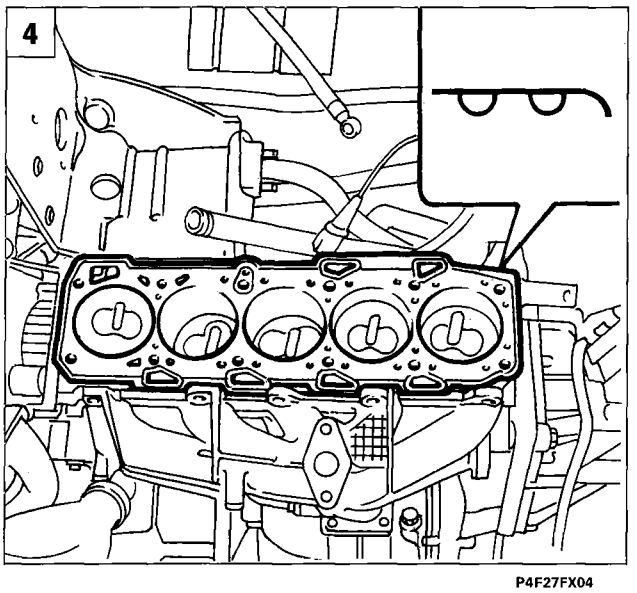

P4F27FX04

1. Remove the inlet manifold from the cylinder head.
2. Remove the plastic guard shown.
3. Use wrench 1852154000, to unscrew the bolts retaining the cylinder head to the crankcase, then remove.

REFITTING CYLINDER HEAD

Fitting gasket to cylinder head

4. After checking piston position in relation to top crankcase surface, in order to maintain compression ratio within specified limits, fit a cylinder head gasket of the thickness shown in the table.

Position the cylinder head gasket with the wording ALTO facing the operator. Ensure that the gasket has been kept in its plastic bag before fitting. Do not lubricate or contaminate with oil and ensure that the crankcase surfaces are thoroughly clean before fitting.

Average piston protrusion	Head gasket thickness	No. of notches
up to 0.85 mm	1.6 mm	-
from 0.85 at 0.95 mm	1.7 mm	1
more than 0.95 mm	1.8 mm	2

Copyright Fiat Auto

10.

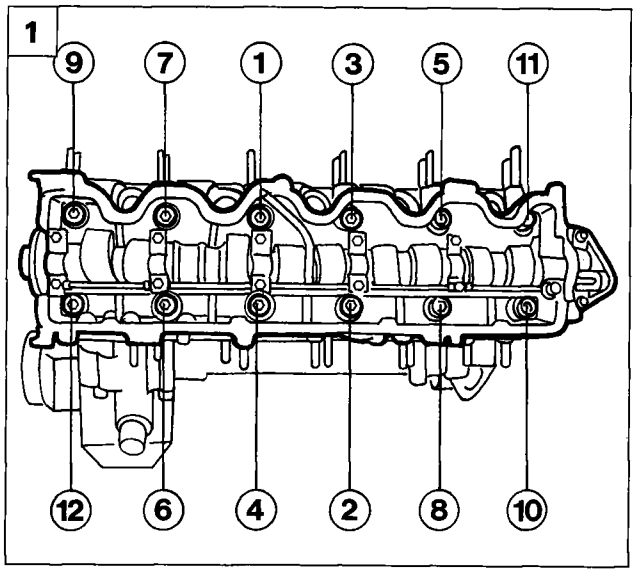

P4F28FX01

Cylinder head tightening

1. Position the cylinder head on the crankcase, then tighten the retaining bolts to torque noting that tightening order is as shown in the figure for each specified tightening stage.

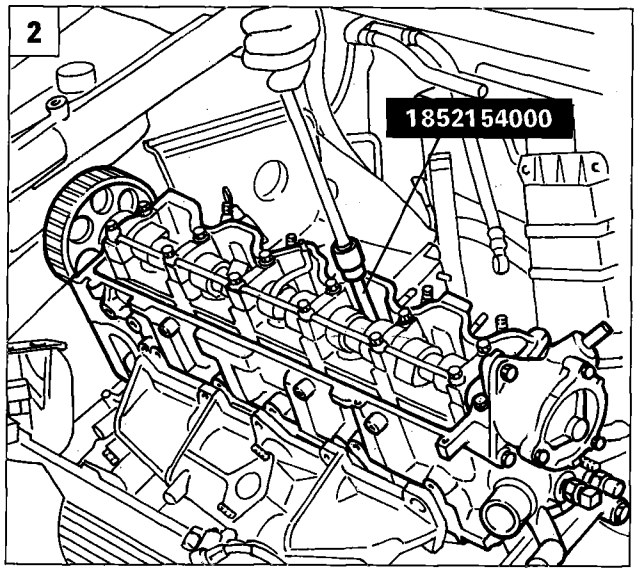

P4F28FX03

2. Oil screws and washers and leave to drain for at least 30 minutes; screw the bolts in to a torque of 2 daNm, then carry out final tightening to a torque of 6.5 daNm using wrench 1852154000.

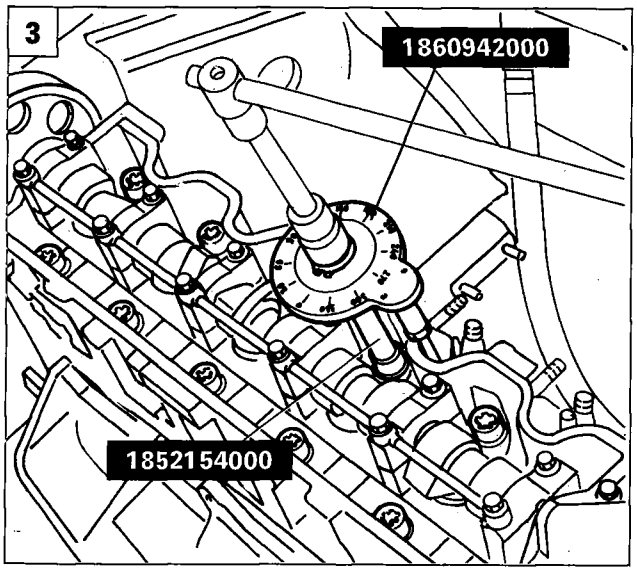

P4F28FX04

3. Tighten the bolts through an angle of 270° in three separate stages (90°+90°+90°) using wrench 1852154000 applied to tool 1860942000.

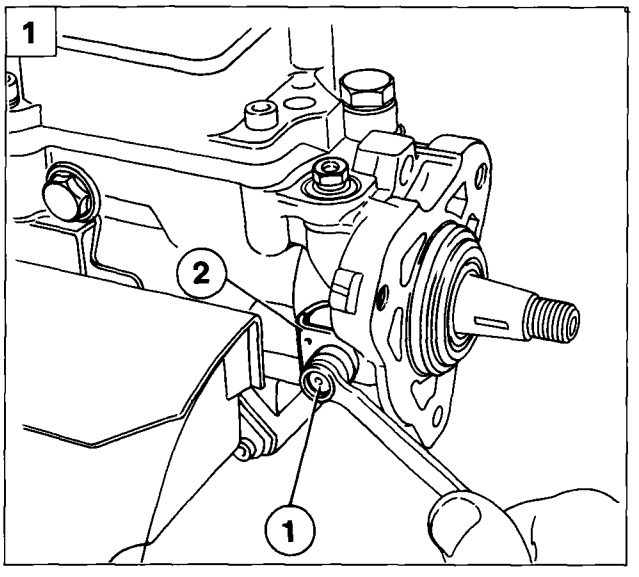

P4F29FX01

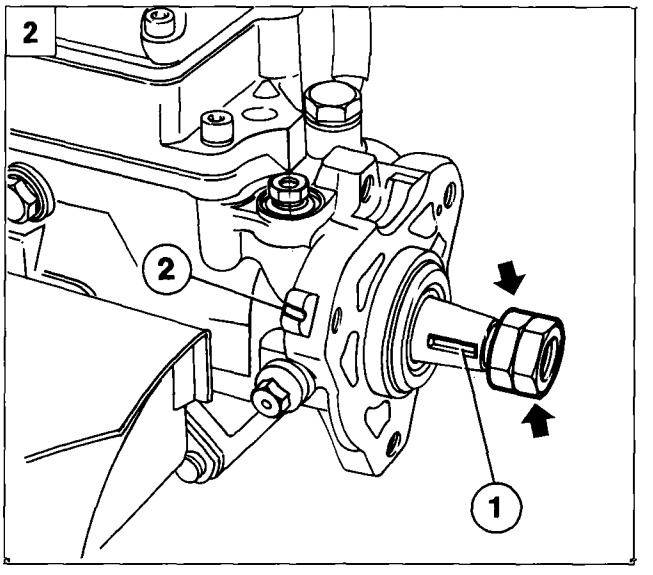

P4F29FX02

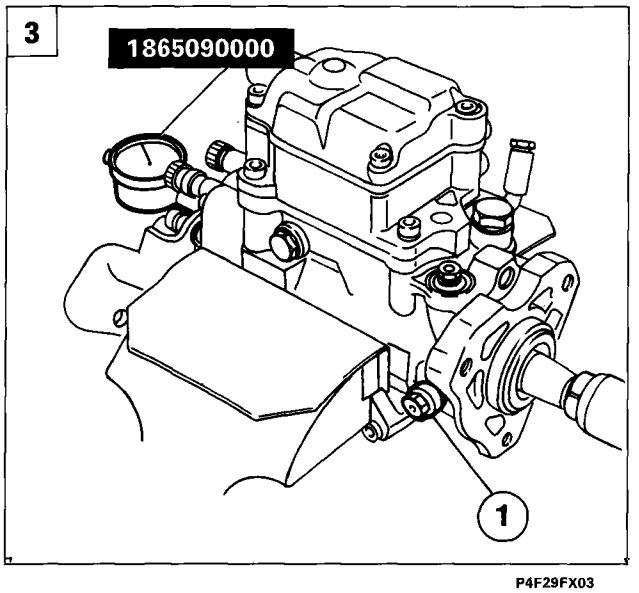

P4F29FX03

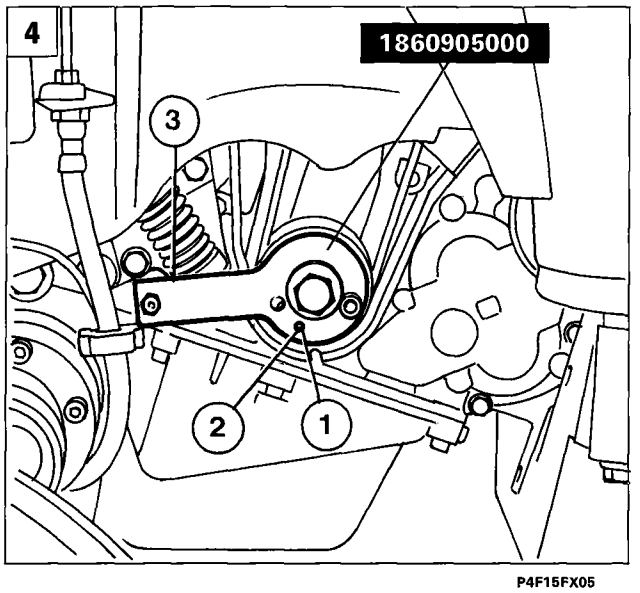

P4F15FX05

Refitting injection pump and adjusting timing

1. Secure the injection pump in a vice, then loosen the retaining bolt(1) and remove spacer (2).

2. Use a nut and lock-nut located at the threaded end of the pump shaft to align the key seat on pump (1) with the notch on pump case (2).

3. Remove the cap on the pump cover and tighten probe 1865090000 together with guage into contact wtih the distributor piston crown. Turn the pump shaft anti-clockwise to the distributor piston BDC, as indicated by the gauge.

   Reset the guage to zero and turn the shaft clockwise until piston stroke is 0.75 mm. Prevent the shaft from turning by means of retaining bolt (1).

4. Fit the belt and position tool 1860905000 on the crankshaft gear and pin (3); turn the crankshaft by small amounts until centring dowel (2) fits into hole (1). In this position, the first cylinder is set to TDC.

Copyright Fiat Auto

10.

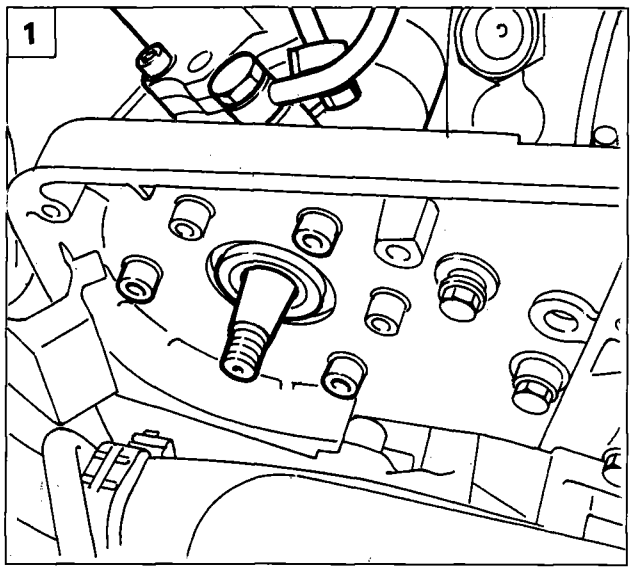

P4F26FX04

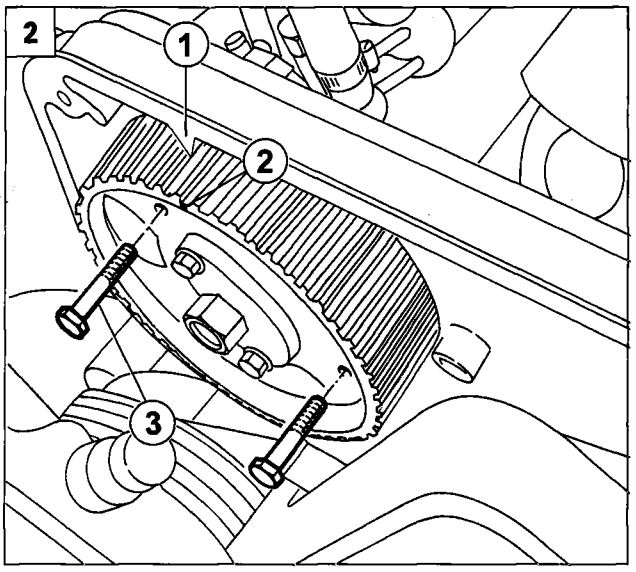

P4F30FX02

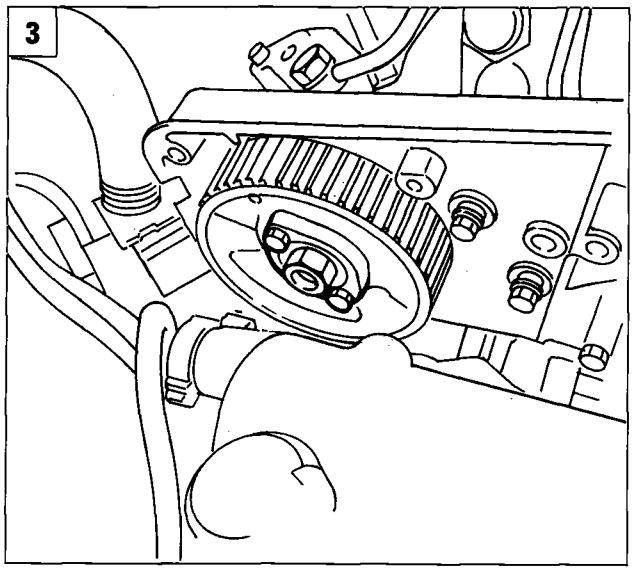

P4F26FX02

1. Fit the injection pump on the mount and tighten the retaining bolts shown.
2. Position the injection pump pulley and check that references (1) and (2) are aligned. Then tighten by means of the two bolts (3) located in the holes shown.
3. Screw in the flange retaining bolts.
4. Position the cam cover and check that pulley reference (1) is aligned with reference (2) on the cam cover.
5. Finish fitting the timing belt as described in the paragraph "Removing - refitting timing belt", and remove both bolts retaining the injection pump to the mount.

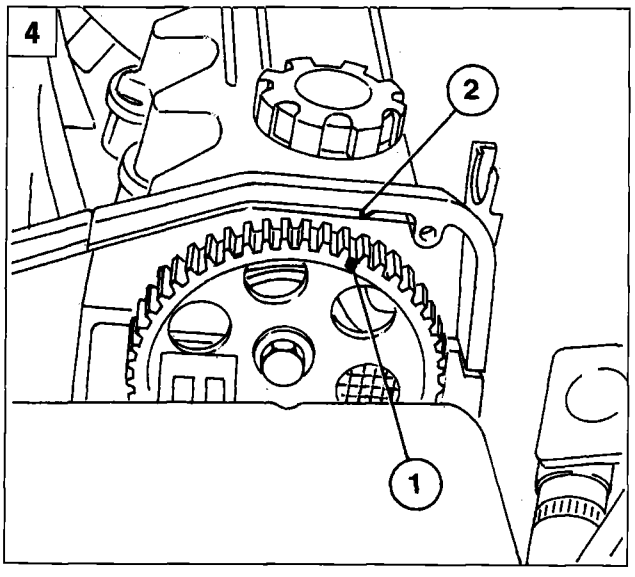

P4F30FX01

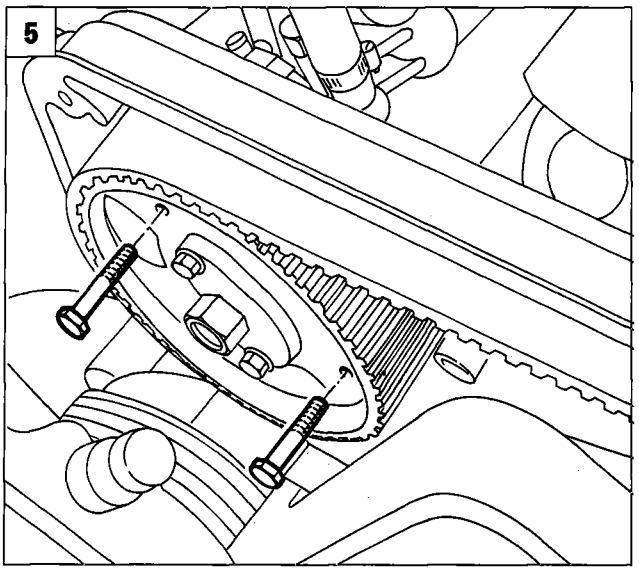

P4F30FX03

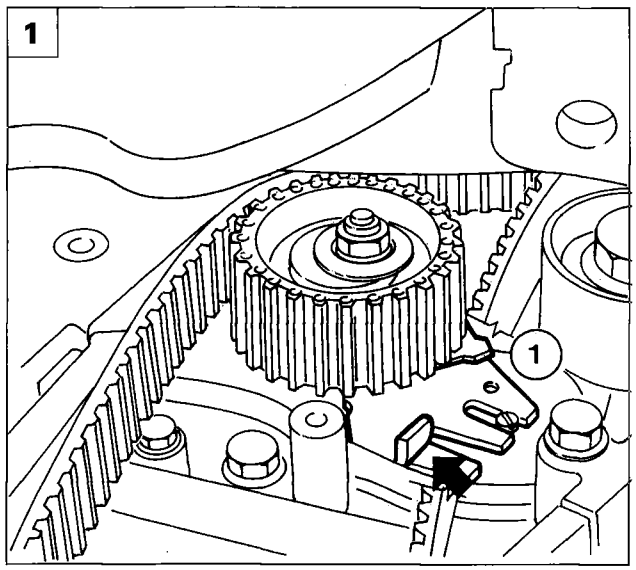

P4F18FX01

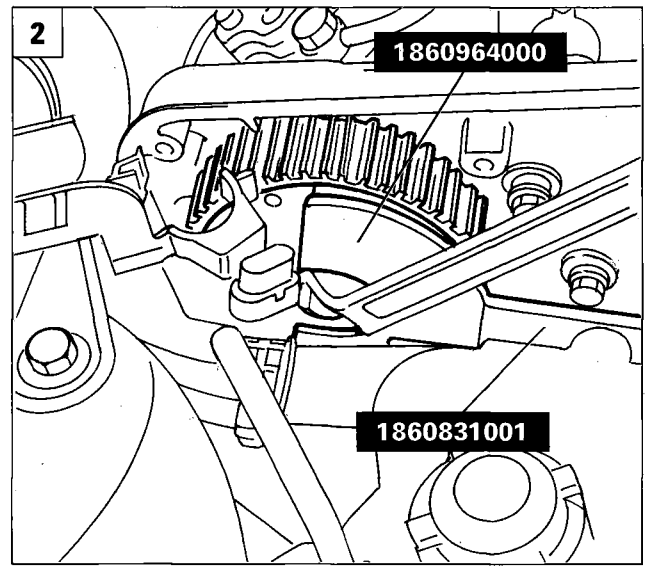

P4F26FX03

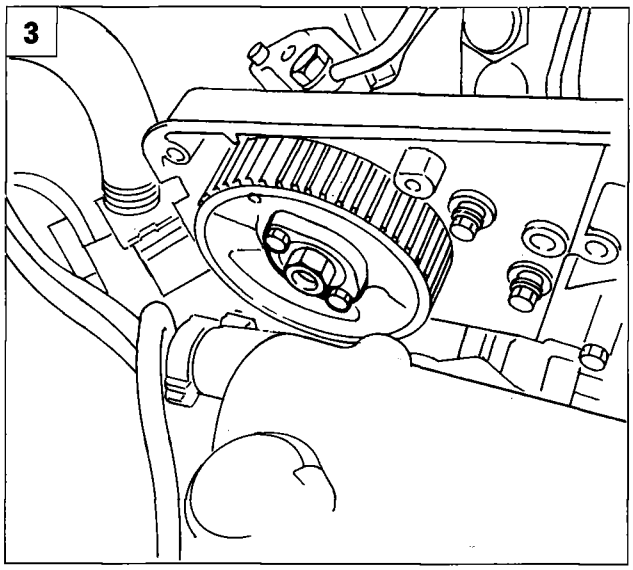

P4F26FX02

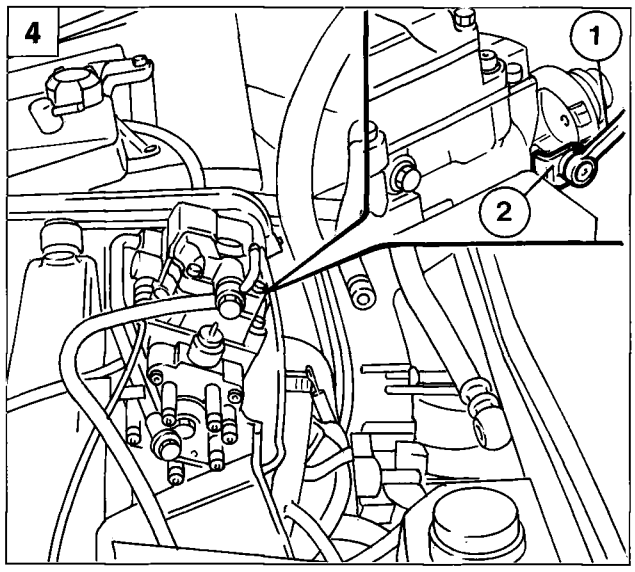

P4F31FX04

1. Apply a force at the point indicated on the automatic tensioner to move the mobile tensioner indicator (1) to the position of maximum tension.

2. Use tools 1860831001 and 1860964000 to secure and tighten the injection pump pulley retaining nut to the specified torque.

3. Tighten both bolts retaining the flange to the pulley.

ff the reading on the gauge changes during tightening of the injection pump pulley, the correct original value must be reset by alterning the position of the slots on the pump mount. Release the three bolts and move the pump until the gauge shows a reading of 0.75 mm.

4. Loosen retaining bolt (1) and reposition spacer (2).

Remove tool 1860905000 then adjust the timing belt to rated tension as described in the previous paragraph. Refit the remaining components removed previously by reversing the removal instructions.

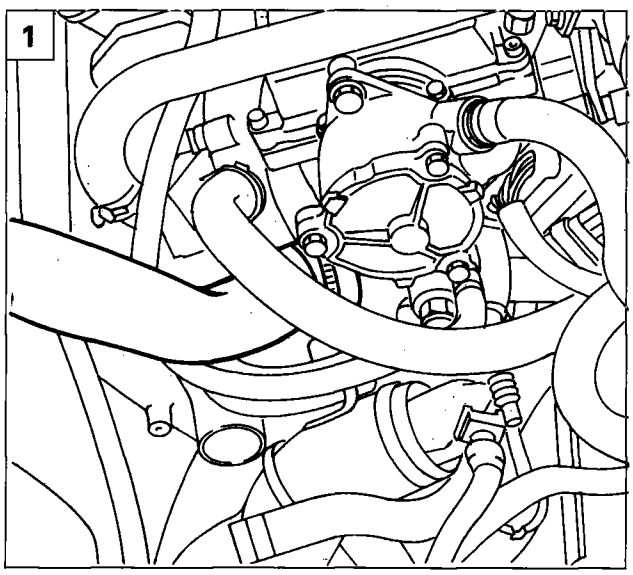

P4F02FX05

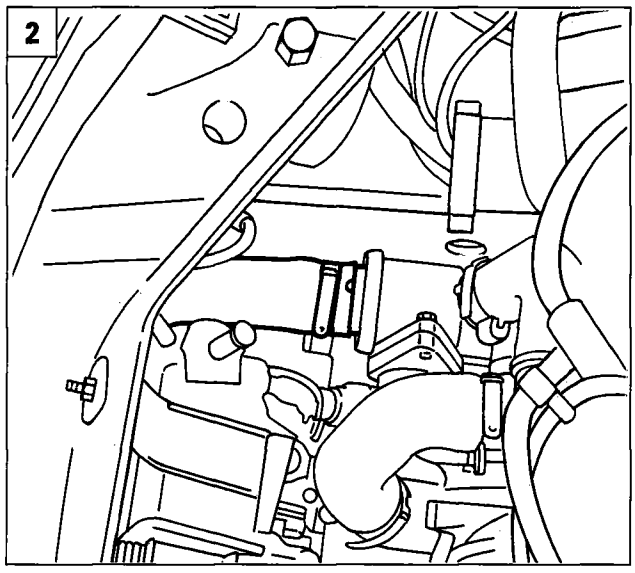

P4F03FX01

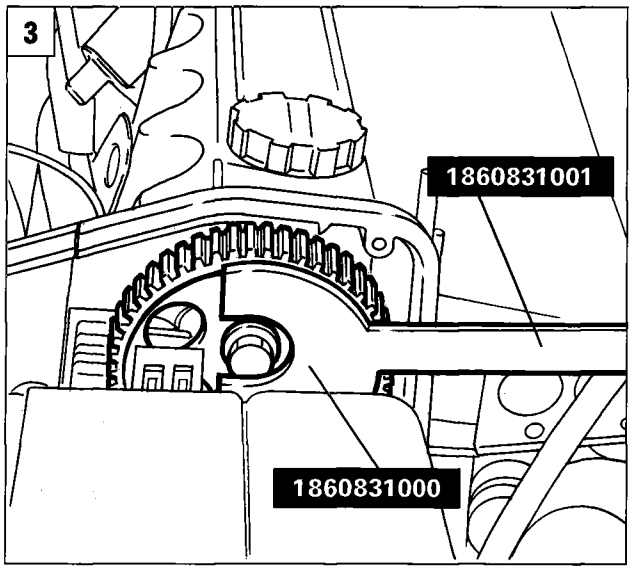

P4F32FX03

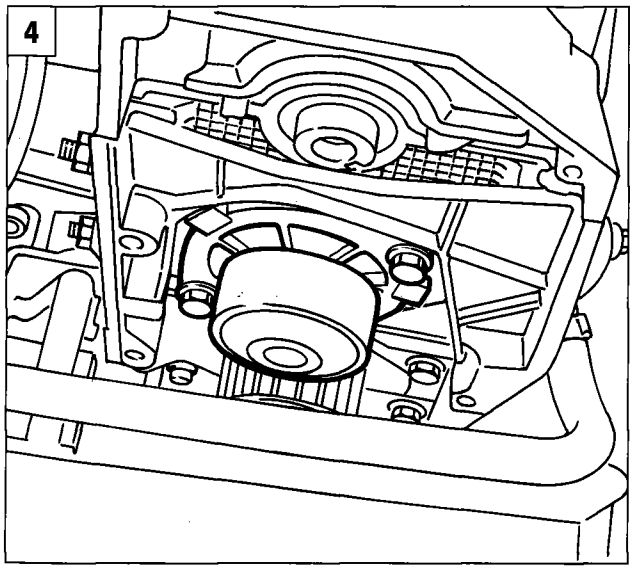

P4F32FX04

REPLACING COOLANT PUMP

Before removing the coolant pump, remove the auxiliary component belt and the timing belt as desribed previously.

1. Position a suitable container to collect the coolant and remove the coolant intake sleeve from the points shown.
2. Remove the coolant outlet sleeve from the points shown.
3. Use tools 1860831001 and 1860831000 to unscrew the camshaft pulley retaining nut.
4. Remove the coolant pump from the cylinder head.

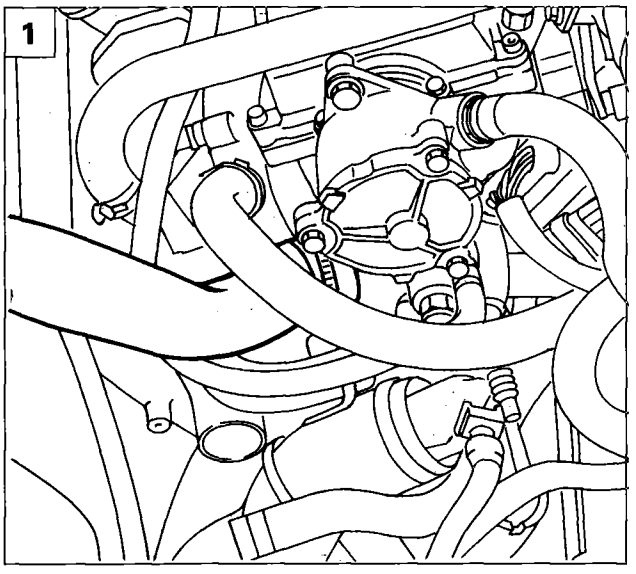
P4F02FX05

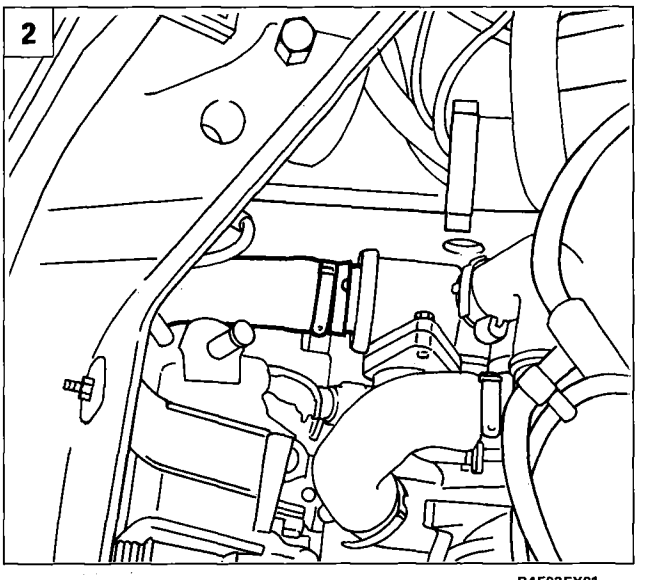
P4F03FX01

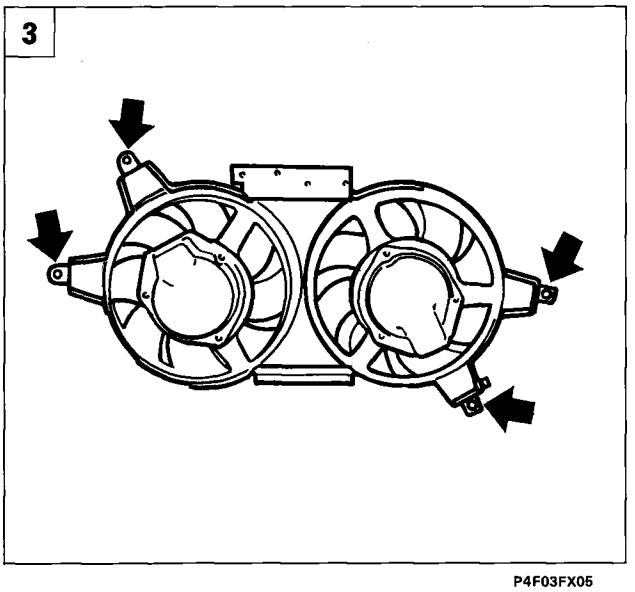
P4F03FX05

REMOVING - REFITTING RADIATOR

1. Position a suitable container to recover the engine coolant and remove the coolant intake sleeve from the points indicated.
2. Remove the coolant outlet sleeve from the point shown.
3. Undo the fan retaining bolts.
4. Loosen bolts (1) retaining the two heat shields, raise, disconnect connections (2), repeat the operations on the other cover and then remove the fan.
5. Disconnect the bulb shown from the radiator.

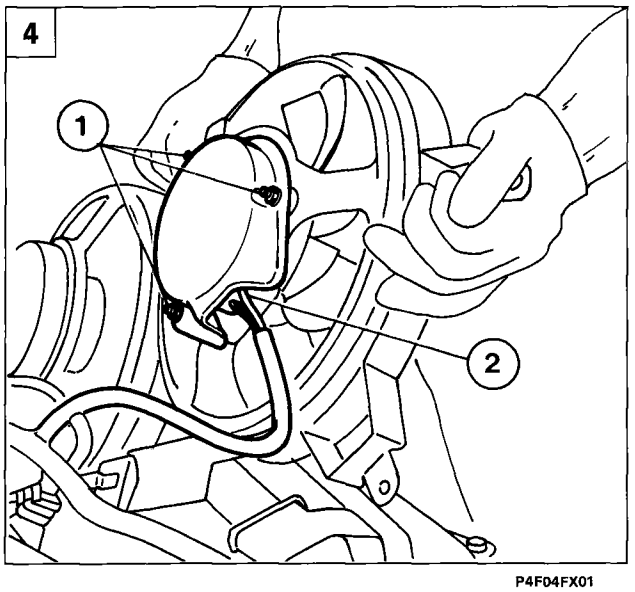

P4F04FX01

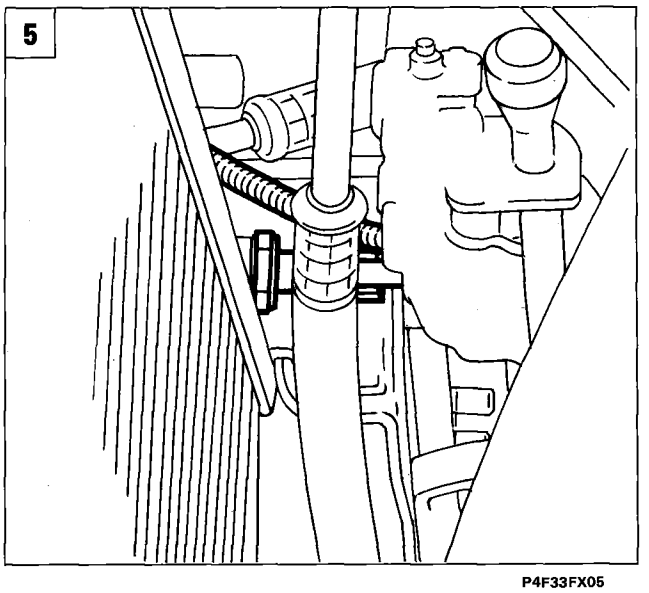
P4F33FX05

10.

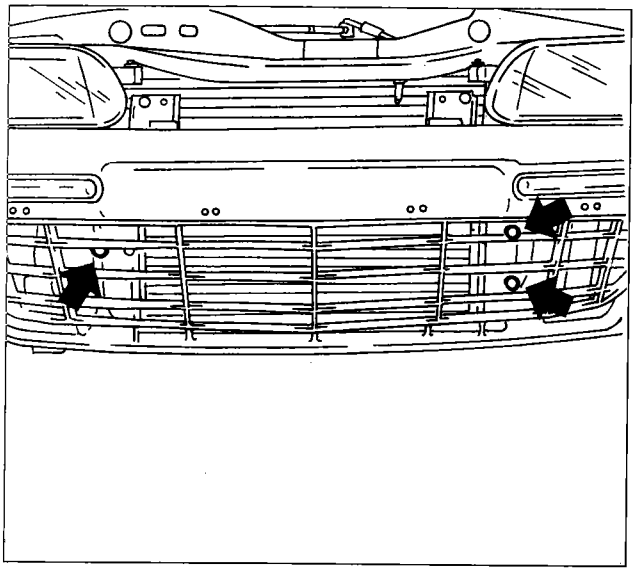

P4F34FX01

1. Unscrew screws fastening the air shroud to the radiator.

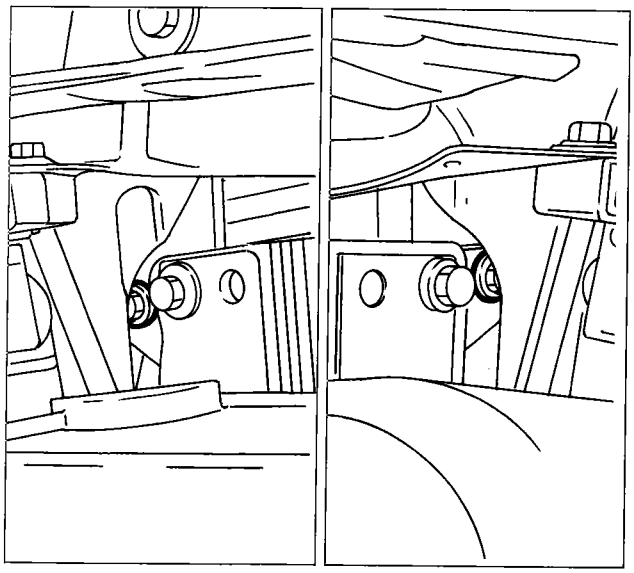

P4F34FX02 P4F34FX03

2. Separate the radiator from the condenser by unscrewing the retaining screws shown.

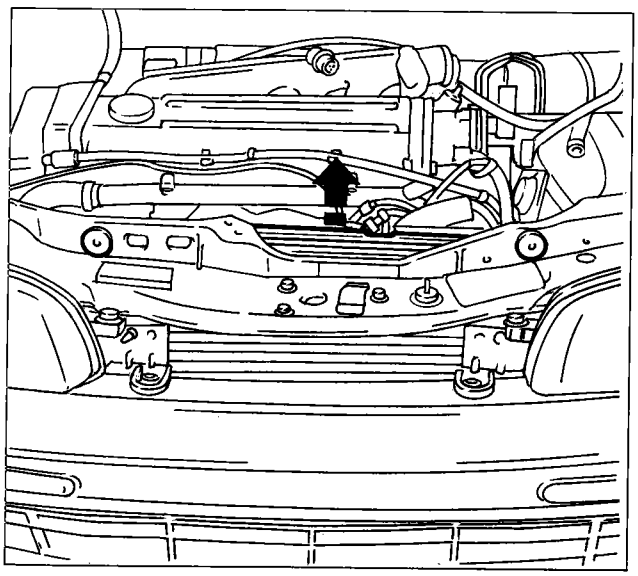

P4F34FX04

3. Unscrew both bolts retaining the radiator to the body, release from the lower retaining pins and remove the radiator from the upper part of the car.

COOLING SYSTEM FILLING PROCEDURE (HEATED VERSION)

Procedure not available at the time of going to press. Will be published during a future update.

COOLING SYSTEM FILLING PROCEDURE (VERSION WITH A/C)

Procedure not available at the time of going to press. Will be published during a future update.

Copyright Fiat Auto

page

BOSCH MOTRONIC S.P.I. INTEGRATED INJECTION/IGNITION SYSTEM 1

- Introduction 1

SYSTEM MANAGEMENT STRATEGIES

- Diagram showing operation of injection/ignition system 2
- Management of the injection 3
- Management of the ignition 9
- Management of the engine idle control 10
- Management of the fuel vapour recirculation 10
- Control of the detonation 10
- Management of the climate control system 11
- Self-adjustment of the system 11
- Management of the engine immobilizer function (Fiat CODE) 11
- Management of the fault diagnosis 11

Diagram showing information entering/leaving the injection/ignition system control unit and sensors/actuators 12
Diagram showing air intake circuit 13
Diagram showing fuel supply circuit 14
Diagram showing fuel anti-evaporation circuit 15
Diagram showing recirculation of gases coming from the engine crankcase (blow-by) 16
Engine exhaust assembly diagram 17
Injection/ignition system wiring 18
Location of injection/ignition system components 20

INJECTION SYSTEM FUSES AND RELAYS 21

EARTH POINT 21

INJECTION/IGNITION SYSTEM COMPONENTS 22

- Injection/ignition system wiring 22
- Injection/ignition electronic control unit 22
- Rpm and TDC sensor 24
- Detonation sensor 25
- Butterfly casing 26
- Butterfly valve angular opening sensor 27
- Direct current motor for controlling the engine idle speed 29
- Injector 31
- Fuel pressure regulator 32
- Intake air temperature sensor 33
- Coolant temperature sensor 34
- Electric fuel pump 35
- Fuel filter 36
- Ignition coil 36
- Lambda sensor 37
- Charcoal filter and fuel vapour cut out solenoid valve 38
- Speedometer sensor 38
- Inertia switch 39
- Multi-purpose valve and safety and ventilation valve 39

CHECKS-ADJUSTMENTS AND REPAIR OPERATIONS FOR BOSCH MONOMOTRONIC SYSTEM 40

- Checks for the fuel supply circuit 40
- Removing-refitting accelerator cable 42
- Removing-refitting accelerator pedal 42
- Removing-refitting fuel tank 42
- Adjusting butterfly valve opening 43
- Removing-refitting butterfly casing 44
- Removing-refitting air temperature sensor and injector 45
- Checking engine idle speed 46
- Checking concentration of pollutant emissions 46

DIAGNOSIS 48

- Detecting faults 48
- Memorizing the error and structure of the errors memory 48
- Classification of the defect 48
- Frequency counter 48
- Signalling a failure 48
- Cancelling an error 49
- Fault diagnosis with the Fiat/Lancia Tester 49
- List of errors 49
- Parameters displayed 50
- Active diagnosis 50
- Recovery 50
- Permanent memory 50

Copyright by Fiat Auto

BOSCH MONOMOTRONIC MA1.7.3 S.P.I. INTEGRATED INJECTION/IGNITION SYSTEM

Introduction

The SPI BOSCH MONOMOTRONIC system is the integrated type, where one single electronic control unit regulates both the injection and the ignition.

It is an SPI system, in other words there is only one single injector which controls the moment and the duration of the injection of the petrol upstream of the butterfly and the moment that the spark strikes in the explosion chamber for each cylinder (advance angle).

The MONOMOTRONIC engine control system is based on information concerning the engine load conditions, the butterfly angle/number of revs (α/n) i.e. the quantity of petrol required and the advances, calculated according to the value of the butterfly opening angle and the engine speed.

This system is equipped with a heated type LAMBDA sensor and, on the basis of the signal coming from the sensor indicating whether the mixture is rich or lean, it correct the injection time. This produces a CLOSED LOOP system.

SYSTEM MANAGEMENT STRATEGIES

Inside the control unit memory there is a management programme (software) which comprises a series of strategies, each of which manages a precise control function for the system.

By using the information (input), each strategy processes a series of parameters, based on maps of data memorized in special areas of the control unit and then operates the system actuators (output) which are devices which allow the engine to operate.

In addition to controlling the moment of ignition and the temperature/pressure of the air drawn in at the various engine speeds, in order to allow the engine to run smoothly when the environmental parameters and the loads applied vary, the management strategies must control and manage the injection so that the stoichiometric ratio (air/fuel) is always within the optimum value.

The system management strategies are basically as follows:

1. management of the injection;
2. management of the ignition;
3. management of the engine idle control;
4. management of the fuel vapour recirculation;
5. control of the detonation;
6. management of the climate control system;
7. self-adjustment of the system;
8. management of the engine immobilizer function - Fiat CODE;
9. management of the fault diagnosis.

Copyright by Fiat Auto

DIAGRAM SHOWING OPERATION OF INJECTION/IGNITION SYSTEM

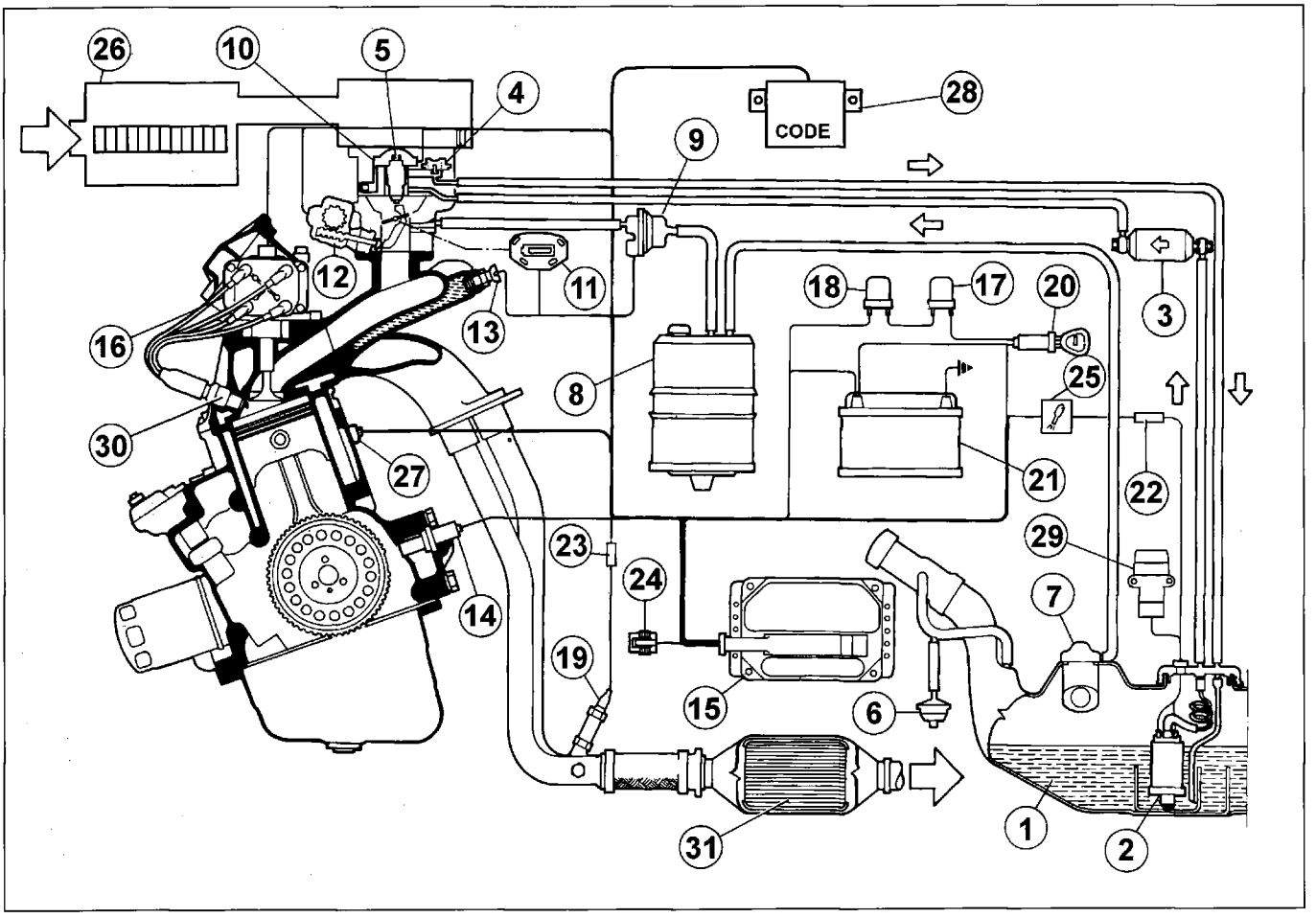

P4F02AJ01

1. Fuel tank
2. Electric fuel pump
3. Fuel filter
4. Fuel pressure regulator integrated in the butterfly casing
5. Injector
6. Vapour breather safety valve (into atmosphere)
7. Breather, ventilation and overturn float valve
8. Active charcoal filter
9. Fuel vapour cut out solenoid valve
10. Air temperature sensor
11. Butterfly valve opening angle sensor (potentiometer)
12. Direct current motor for controlling the engine idle speed incorporaating the butterfly valve closure recognition micro-switch
13. Coolant temperature sensor
14. Engine rpm sensor
15. Electronic control unit
16. High tension coil
17. Main system relay feed
18. Electric fuel pump relay
19. Heated Lambda sensor
20. Ignition switch
21. Battery
22. Electric fuel pump fuse
23. System fuse
24. Diagnostic socket
25. System failure warning light
26. Thermostatic duct
27. Detonation sensor
28. Fiat CODE control unit
29. Inertia switch
30. Spark plugs
31. Catalytic silencer

MANAGEMENT OF THE INJECTION

Through the acquisition of information concerning the engine speed (n) and the butterfly valve opening (alfa), the control unit identifies the basic injection time (ti) in a special map.

Given the varying usage conditions of the engine, the injector opening values are optimized by correcting the times on the basis of the following variations: the coolant temperature (1), the air temperature (2) and the signal sent by the lambda sensor (3), always using a synchronous type injection, timed with the moment of ignition.

By means of special maps selected by interpolation, the control unit tries to always keep the metering values close to the stoichiometric value (14.7 parts of air and 1 part of petrol).

In order to keep this ratio constant, **the electronic control unit uses two different methods for controlling the opening of the injector.**

The first method is that of **synchronous operation, where the injector is opened each time a high tension impulse is sent to the spark plugs** (diagram A).

The second method involves a**synchronous operation, where the electronic control unit controls the opening of the injector irrespective of the number of high tension impulses sent to the spark plugs** (diagram B).

This takes place because in certain conditions (with basic injection times which are too short, ≥ 1.4 milliseconds) the mechanical inertia characteristics (hystersis) of the injector do not allow suitable openings and closures; for this reason a particular strategy which comes within the mechanical characteristics of the injector must be adopted.

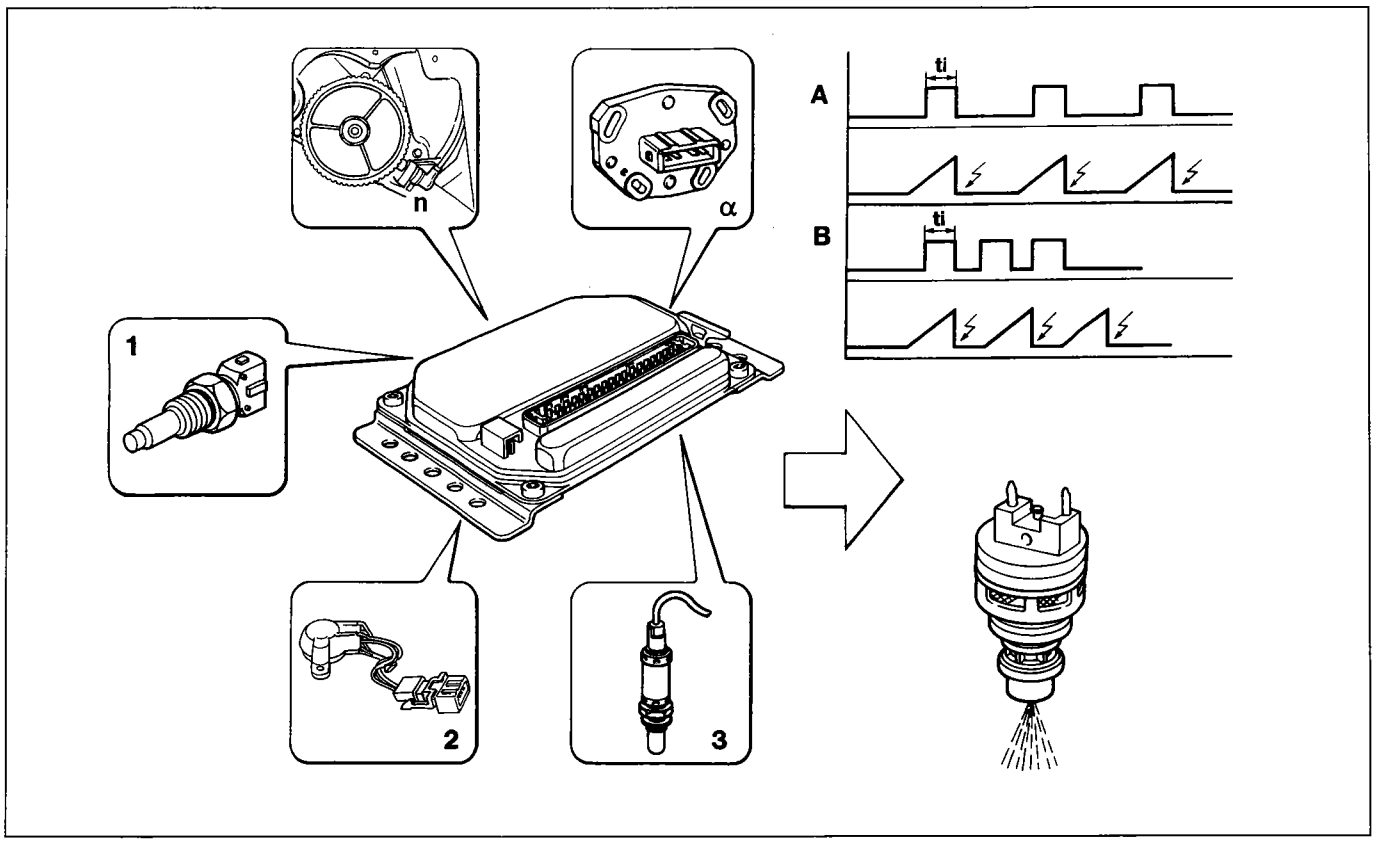

P4F03AJ01

Checking the electric fuel pump supply

The operation of the electric fuel pump (A) is entrusted to the electronic control unit which, by means of the relay (B), ensures that it is switched on when the engine is being started up and when it is running normally.

With the ignition switch in the ON position (15/54), the pump relay (B) and the main relay (C) are supplied simultaneously and the latter, on closing, supplies the control unit (terminal 1).

By means of a special circuit, the control unit closes the pump relay (B) to earth via terminal (25) and the pump relay supplies the fuel pump (A), via a 10 A fuse, pressurizing the fuel system for around 1 to 2 seconds.

When the engine is started up, as the engine rpm signal coming from the rpm and T.D.C. sensor (D) reaches terminals 16 and 32 of the control unit, after around 1 second the relay (B) is energized and consequently the fuel pump cuts out (for safety reasons) even with the ignition switch in the ON position.

If the batterry voltage goes below the nominal value (for example during cold starting), the fuel pump supply pressure tends to decrease.

In order to overcome this problem, the control unit increases the injection times proportionally in accordance with a correction factor in order to ensure the exact metering of the fuel.

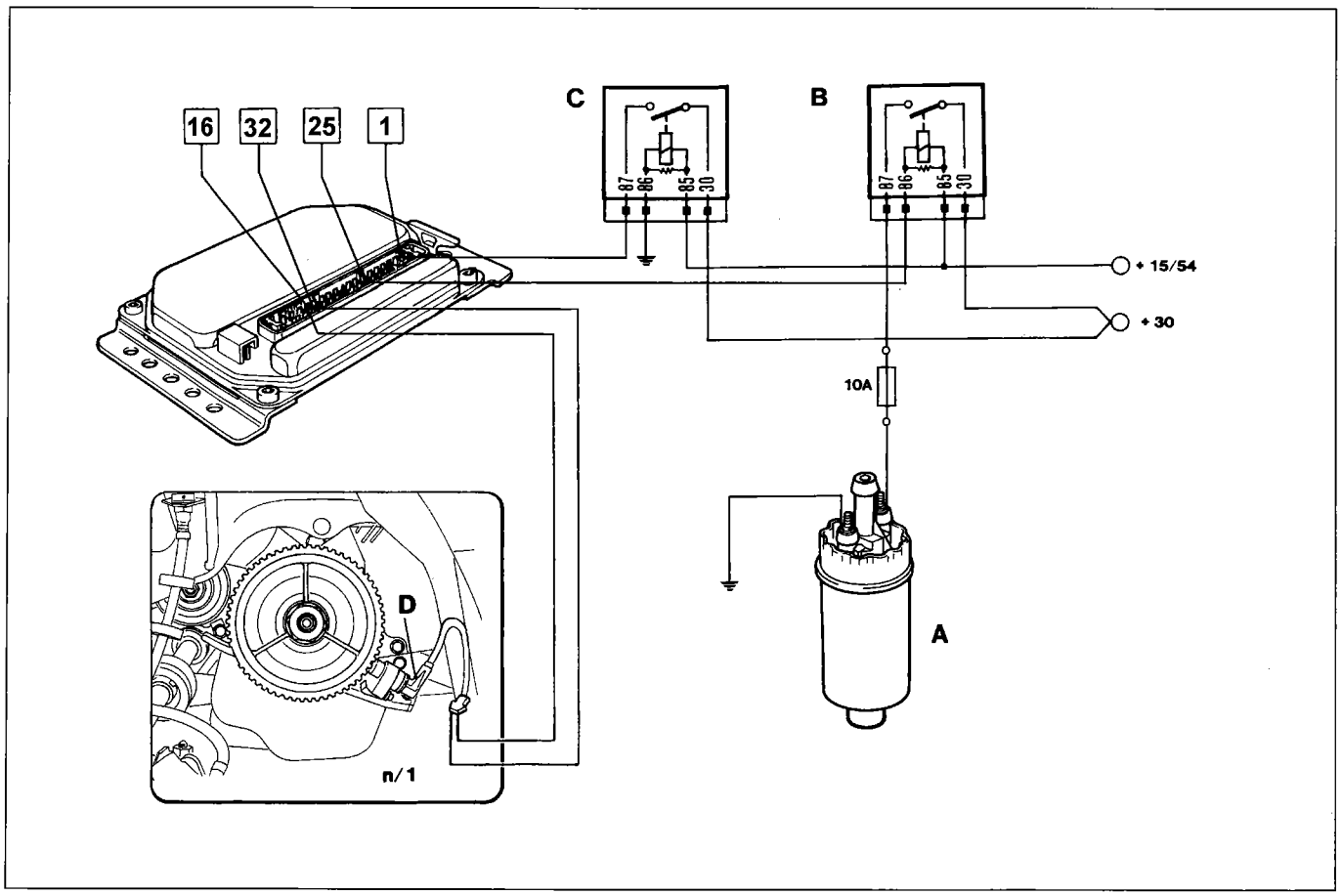

P4F04AJ01

Starting

With the ignition key in the ON position, the electronic control unit supplies the electric pump for several moments and acquires the data from the various sensors.
According to the coolant temperature sensor (1) the control unit arranges the opening of the butterfly valve by means of the direct current motor (2). **The starting stage is recognized by the control unit when the value of the engine speed detected by the sensor (3) is above 30 rpm.**
At low engine temperatures, the injection times are increased: the injector remains open for longer, producing a richer mixture.
At high engine temperatures, the injection times are decreased with a consequent approaching of the stoichiometric ratio.
There is also an anti-flooding function in the control unit, controlled by an internal timer, which gradually reduces the enrichment of the mixture when the engine does not start up for any reason.
During the post-starting stage, the basic injection times, selected by the control unit, are enriched by a function which varies in relation to the temperature of the engine coolant which is cancelled according to the time.
The multiplication value is not maintained constant for the entire period of engagement, but is gradually reduced (by a timer in the control unit).
Whilst the engine is warmin up a further enrichment of the mixture takes place, dependent on the temperature of the engine coolant, which is not timed and which is added to the post-starting one.
This enrichment decreases gradually in a manner which is inverserly proportional to the engine temperature.

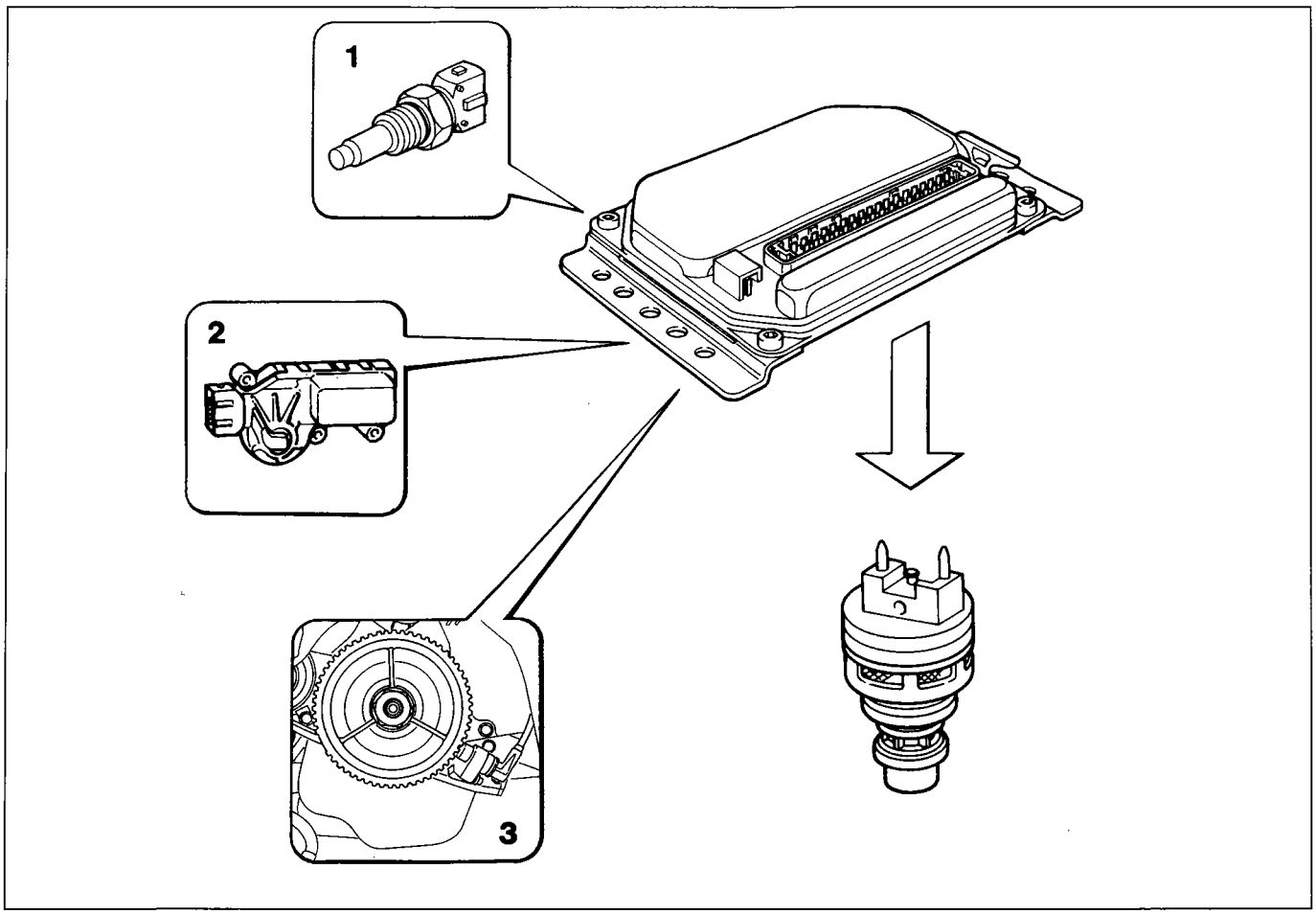

P4F05AJ01

10.

Acceleration and full power

During acceleration the electronic control unit always provides enrichment (diagram A) of the mixture strength according to the signals sent by the engine coolant temperature sensor (1), the rpm sensor (2) and the butterfly valve angular position sensor (3).

During the operation of the engine in full power conditions the basic injection times (ti) are increased (enrichment) by a factor (K) which depends on the butterfly valve (3) oening angle (α).

When the butterfly valve opening angle exceeds 70° (diagram B), the full power enrichment is operational and the basic injection times are increased by about 10%.

When 6000 rpm is exceeded, the system restricts the maximum number of revs through the electronic control unit (which suppresses the injection impulses cutting off the fuel supply).

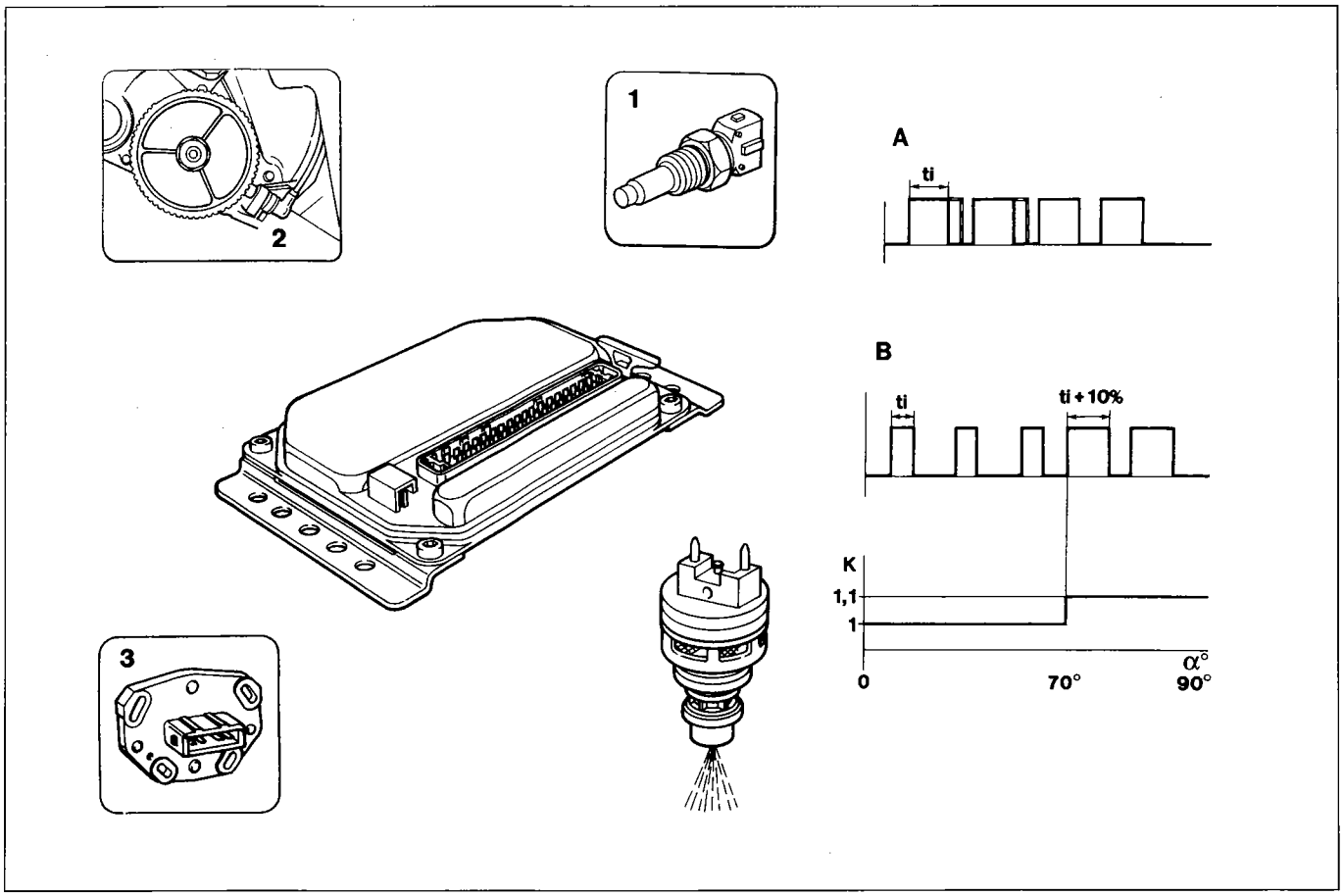

P4F06AJ01

Deceleration and CUT-OFF

During deceleration it is necessary to make the mixture leaner to reduce fuel consumption and pollutant emissions (HC + CO).

In order to achieve this objective, there is a function in the control unit known as the fuel cut off which depends on the closure of the contact (1) in the idle control motor, the temperature of the coolant and the engine speed.

The first two conditions necessary for activating the CUT-OFF function are:

- coolant temperature above around 40° C,
- engine speed above around 1800 rpm

If the above mentioned conditions exist during deceleration, when the idle contact (1 - butterfly closed) closes terminal 3 for the control unit is placed to earth and the control unit, in turn, interrupts the injection of fuel via terminal 21.

In addition to cutting off the fuel, the control unit activates a special ignition curve with an advance known as "release".

The cutting off the injection of fuel and the specific advnance curve are opertional until the engine reaches a speed of around 1500 rpm, below which the injection impulses must be activated in order to prevent the engine from cutting out.

When the injection is restored, the control unit implements a fuel enrichment strategy in order to reform the film of petrol on the inlet manifold which improves the operation of the engine.

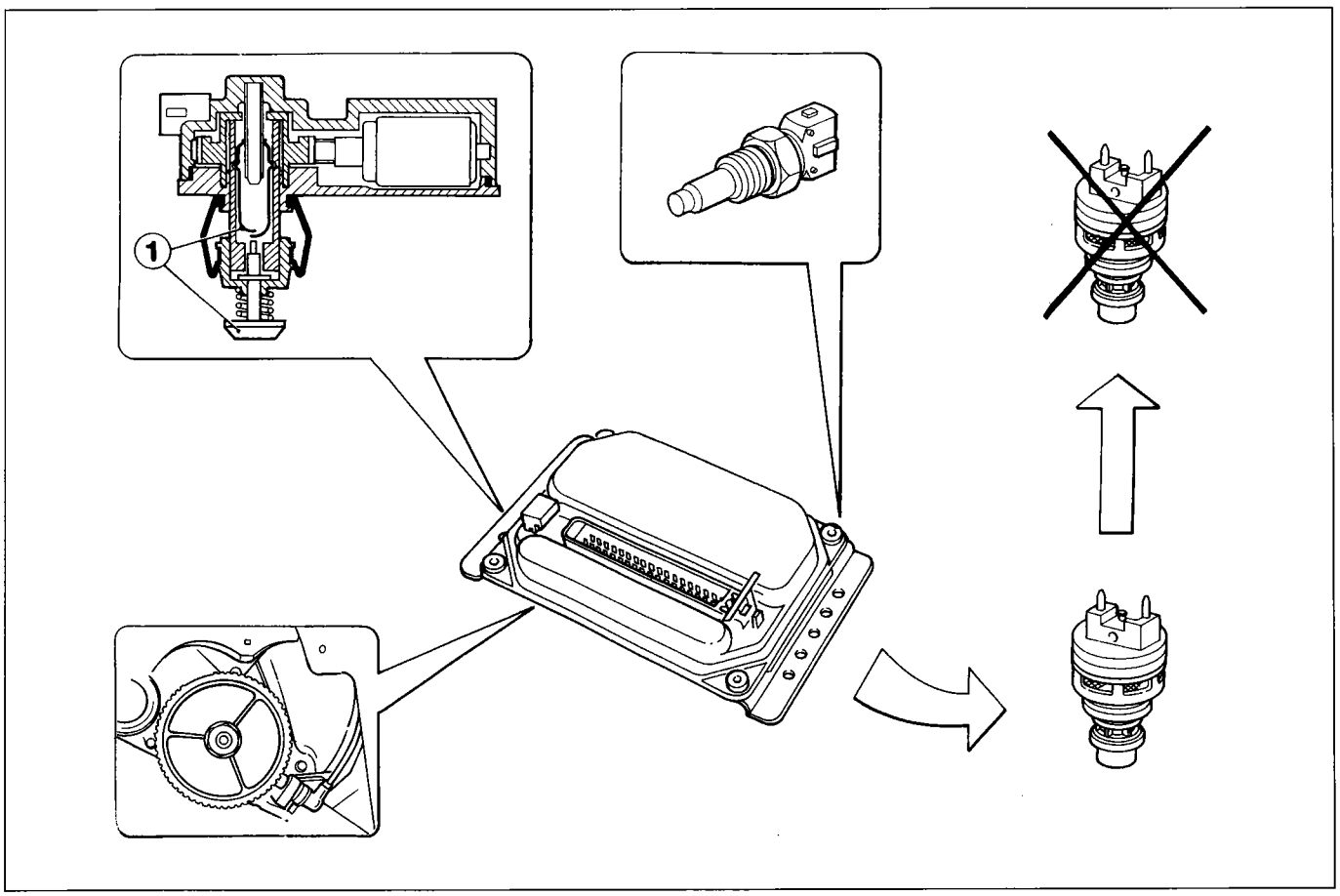

P4F07AJ01

10.

LAMBDA adjustment

The control of the mixture is ensured by the LAMBDA sensor which detects the residual oxygen content in the exhaust gases.

Since the ceramic material is not activated below 300° C, the LAMBDA sensor is electrically heated by a resistance (inside it) which always receives a positive supply controlled by the ignition and is protected by a 10 A fuse.

This heating is necessary during cold starting to preserve the efficiency of the sensor in case the engine is idling for a long period.

At temperatures above 300° C, the ceramic material becomes a conductor of oxygen ions, consequently if the quantity of oxygen present at the two sides of the sensor is in differing percentages a variation in voltage is created between the two poles.

The LAMBDA sensor causes the voltage variation signal to reach the control unit via terminals (12) and (13).

The LAMBDA sensor detections concerning the composition of the exhaust gases allow the electronic control unit to constantly correct the mixture strength in real time (making it leaner/richer) in order to keep it as close as possible to the stoichiometric strength. The efficiency of the operation of the catalyzer and the restriction of the toxicity of the exhaust gases depends on the exact composition of the mixture.

During the above mentioned stagtes, the variations in the injection time made by the control unit according to the LAMBDA sensor signal are excluded because they would be in opposition to the driving conditions set; consequently the engine operates in OPEN LOOP conditions.

With the LAMBDA sensor working properly and the control unit control circuit operating, the percentages of pollutant gases at the exhaust are automatically regulated by the system without the possibility of external adjustments.

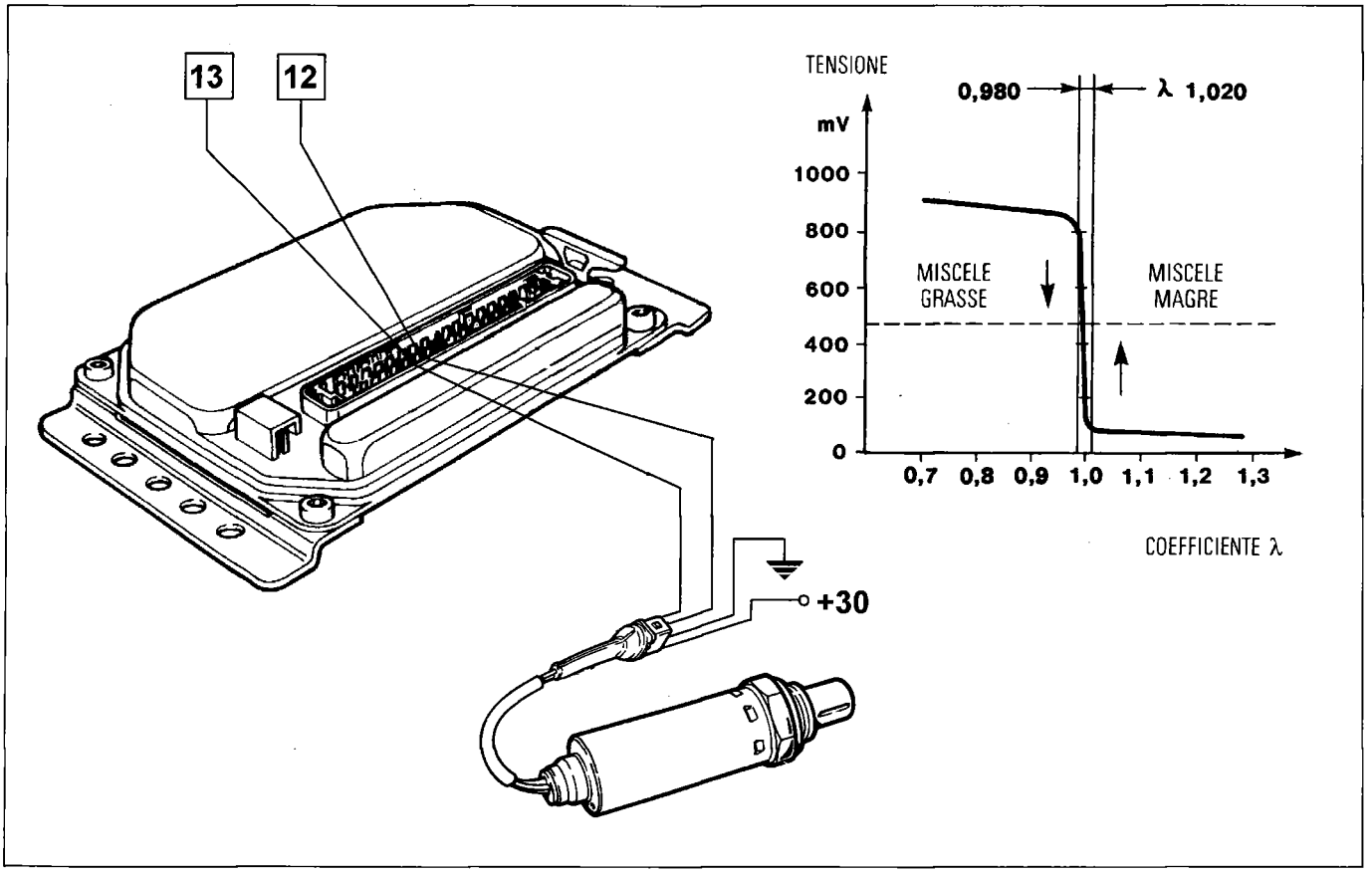

P4F08AJ01

MANAGEMENT OF THE IGNITION

The ignition system used is the static advance type. The term static comes from the fact that as there is no high tension distributor (casing-brushes-cap) there are no moving parts.

The coil (B) has 4 high tension sockets which are connected directly to the spark plugs and whose operation is managed entirely by the control unit (A).

Inside the control unit (in addition to the various values for controlling the fuel metering) a map (C) containing an entire series of optimum advance angle values is stored which the engine uses according to the range in which it is operating: engine load (α) and number of revs (n).

The values memorized are obtained experimentally, with the engine at the test bench, taking into account power, consumption and pollutant emissions.

On the basis of the maps memorized, the values for the number of revs (D), the temperature of the coolant (E), the engine load (F) and possible detonation (G), the control unit manages to select the correct advance value operating the ignition unit power module.

As the engine operating conditions vary there are 3 different basic maps for the advance angle:
- full load, where it depends on the engine speed and load conditions.
- partial load, where it still depends on the engine speed and load conditions.
- idling where it depends on the engine speed.

The advance angle in full load and partial load conditions may also have additional corrections according to the temperature of the engine and the temperature of the air; whilst the idle advance angle is only corrected on the basis of the engine temperature (its value is around 7° not constant).

There is an algorhythm in the control unit which calculates the advance according to the number of revs and battery voltage at which the current starts to flow through the ignition coil.

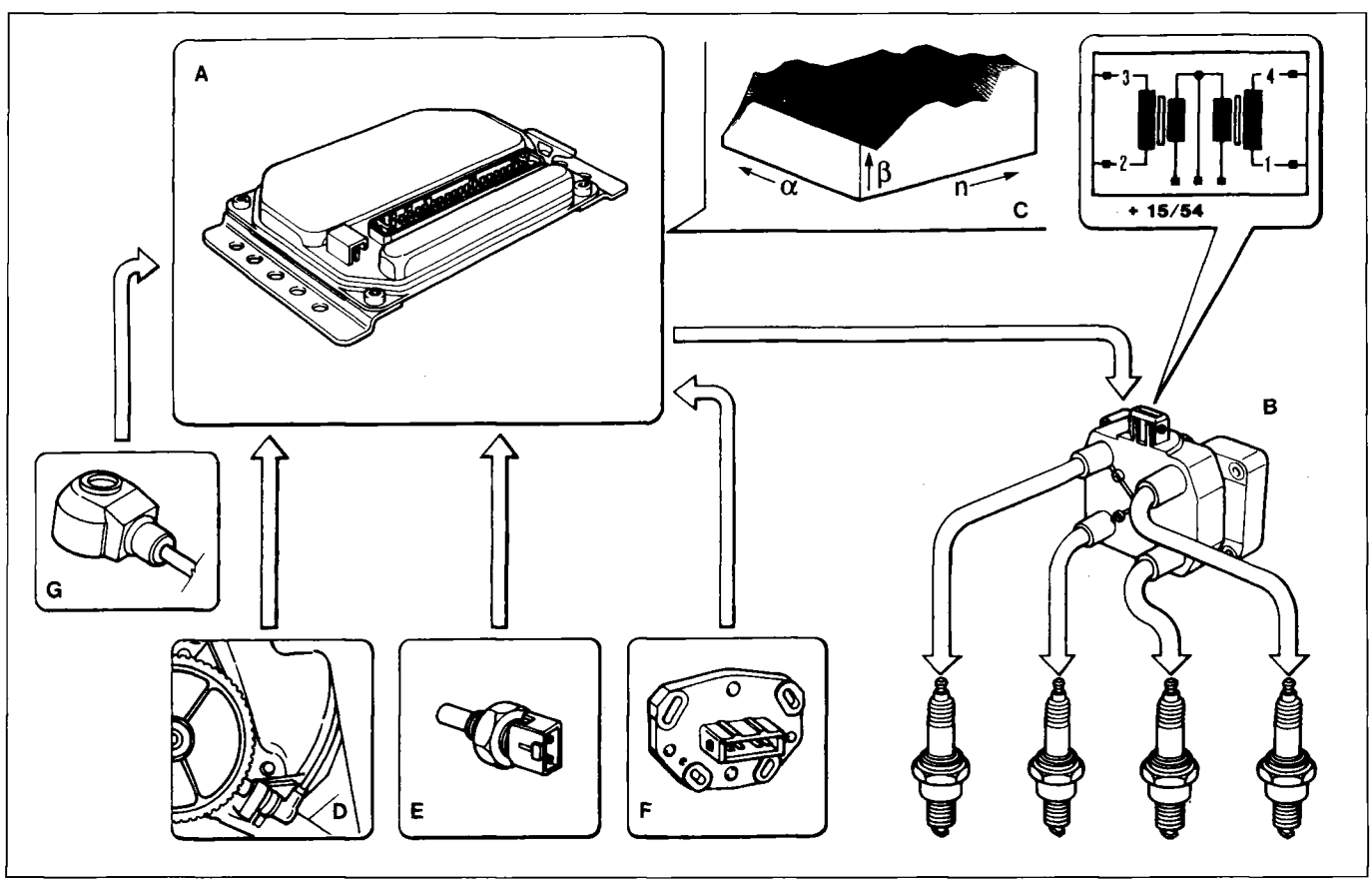

P4F09AJ01

The ignition is composed of two primary windings, connected to the control unit (A) via terminals 34 and 35, supplied by the battery voltage and two high tension secondary windings whose outlets are connected directly to the spark plugs for cylinders 1-4 and 3-2.

The high tension reaches the pair of spark plugs each time the circulation of the current in the primary winding is interrupted by the power module. The static distribution of the high tension takes advantage of the different pressure conditions which exist simultaneously in the pairs of cylinders 1-4 and 3-2.

In pratice, during the compression stroke for one cylinder, where there is a mixture of air/petrol, the other cylinder is in the exhaust stroke.

If, in these conditions, the voltages required to strike the spark between the spark plug electrodes is examined, it can be seen that during the compression stroke the voltage is very high (10 - 15 kV), whilst during the exhaust stroke the voltage is extremely low (in the order of 500 V).

The secondary circuit for each coil is therefore closed by two sparks; one of around 500 V also known as the lost spark because it occurs in the cylinder in the exhaust stroke and the other between 10 - 15 plus kV in the cylinder in the compression/explosin stroke capable of burning the air/petrol mixture in the actual cylinder.

MANAGEMENT OF THE ENGINE IDLE CONTROL

The general aim of the strategy is to keep the engine idle speed around the value memorized (engine warm: 850 ± 50 rpm): the position assumed by the idle speed control actuator depends on the following engine conditions:

Starting stage

When the ignition is switched on, the actuator assumes a position which depends on the temperature of the engine coolant and the battery voltage (open loop position).

Warming up stage

The number of revs is corrected, above all, according tothe temperature of the engine coolant.

With the engine at operating temperature the management of the idle depends on the signal coming from the engine rpm sensor; when external loads are applied, the control unit manages the idle sustained.

Deceleration stage

In deceleration conditions outside of idling, the control unit controls the position of the actuator by means of a special flow rate curve (dash-pot), slowing down the return of the push rod towards it housing, thereby reducing the braking effect of the engine.

MANAGEMENT OF THE FUEL VAPOUR RECIRCULATION

The fuel vapours (pollutant, according to regulations) are sent to an active charcoal filter and from there to the engine where they are burnt; this takes place by means of a solenoid valve which is only operated by the control unit when the engine load conditions allow correct combustion without the operation of the engine being "disturbed": in effect, the control unit compensates for this quantity of fuel entering by reducing the supply to the injectors.

CONTROL OF THE DETONATION

This function has the task of detecting the presence of the phenomenon of detonation (engine knock) by processing the signal coming from the appropriate sensor. The control unit constantly compares the signals coming from the sensor with a base value which is, in turn, constantly updated, in order to take into account the basic noise and the ageing of the engine.

The control unit is therefore capable of detecting the presence of detonation (or the onset of detonation) and reduces the ignition advance until the phenomenon disappears. Later, the advance is gradually restored to the basic value.

In acceleration conditions, a higher level is used, to take into account the increased noise of the engine in these circumstances. The detonation control strategy also has a self-adjustment function which memorizes the reductions in the advance which are constantly repeated in order to adjust the map to the different engine operating conditions.

MANAGEMENT OF THE CLIMATE CONTROL SYSTEM

When the climate control is switched on the compressor absorbs power from the engine which, when idling, tends to cut out. To avoid this problem the control unit adjusts the air flow rate to the new power requirements, operating the appropriate actuator (this adjustment also takes place in usage conditions to maintain optimum driveability). Another function of the system is that of momentarily interrupting the compressor supply in the case of high engine power requirements (strong acceleration).

SELF-ADJUSTMENT OF THE SYSTEM

The control unit is equipped with a self-adjustment function which has the task of recognizing the changes which take place in the engine due to the processes of bedding in over a period of time and the ageing of both the component and the actual engine.
These changes are memorized in the form of modifications to the basic map and have the aim of adapting the operation of the system to the gradual alterations of the engine and the components compared with when they are new.
This adjustment function also makes it possible to compensate for the inevitable differences (due to production tolerances) of components which may have been replaced. This makes it possible to have maximum results in all vehicles without special adjustment and control operations.
The self-adjustment parameters are lost if the control unit is disconnected.

MANAGEMENT OF THE ENGINE IMMOBILIZER FUNCTION (FIAT CODE)

The system is equipped with an engine immobilizer function. This function is achieved thanks to the presence of a special control unit (Fiat CODE), capable of dialogue with the injection/ignition control unit and an electronic key which has a special transmitter for sending a recognition code.

Each time the ignition is turned to the OFF position, the Fiat CODE system completely deactivates the injection/ignition control unit.
By turning the ignition to the ON position the following operations take place in the order given:

1. the engine control unit (whose memory contains a secret code) sends the Fiat CODE control unit a request to send the secret code to deactivate the immobilizing of the functions;
2. the Fiat CODE control unit responds by only sending the secret code after having, in turn, received the recognition code sent by the ignition key;
3. the recognition of the secret code allows the deactivating of the immobilizing of the injection/ignition electronic control unit and its normal operation.

NOTE *Given the presence of the Fiat CODE system, during the diagnosis and/or any operating checks* **DO NOT CARRY OUT** *testsusing another injection/ignition control unit. In effect, in such a case the Fiat CODE control unit would transfer the (unrecognized) recognition code to the test control unit which would therefore no longer be fit for use on other vehicles.*

MANAGEMENT OF THE FAULT DIAGNOSIS

A complete electronic fault diagnosis of the injection/ignition system is obtained by connecting the FIAT LANCIA TESTER to the diagnostic socket.

The system is, however, also equipped with an auto-diagnostic function which recognizes, memorizes and signals any failures.

If a failure is detected at the sensors or actuators, the signal reconstruction (recovery) strategies are immediately activated in order to ensure the operation of the engine at an acceptable level without adversely affecting its performance. It is therefore possible to drive the vehicle to a service centre where the appropriate repairs can be carried out.

Copyright by Fiat Auto

DIAGRAM SHOWING INFORMATION ENTERING/LEAVING THE BOSCH MONOMOTRONIC SPI INJECTION/IGNITION SYSTEM CONTROL UNIT AND SENSORS/ACTUATORS

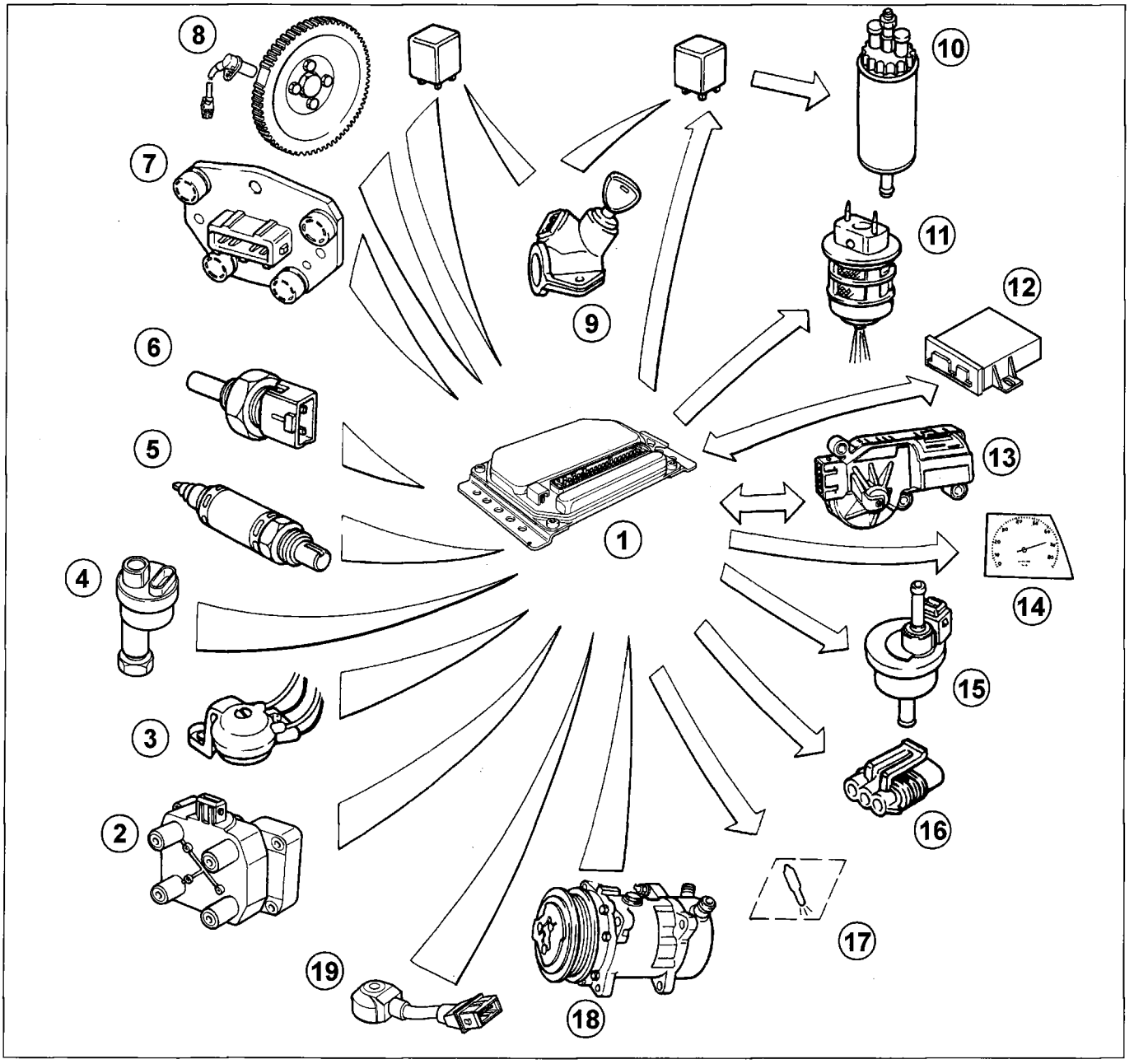

P4F12AJ01

Components key

1. Electronic control unit
2. Coil
3. Air temperature sensor
4. Speedometer sensor
5. Lambda sensor
6. Engine coolant sensor
7. Butterfly position sensor
8. Rpm and TDC sensor
9. Ignition switch
10. Electric fuel pump
11. Injector
12. Fiat CODE control unit
13. Engine idle speed actuator
14. Rev counter
15. Fuel vapour cut out solenoid valve
16. Diagnostic socket
17. Injection failure warning light
18. Climate control compressor
19. Detonation sensor

DIAGRAM SHOWING AIR INTAKE CIRCUIT

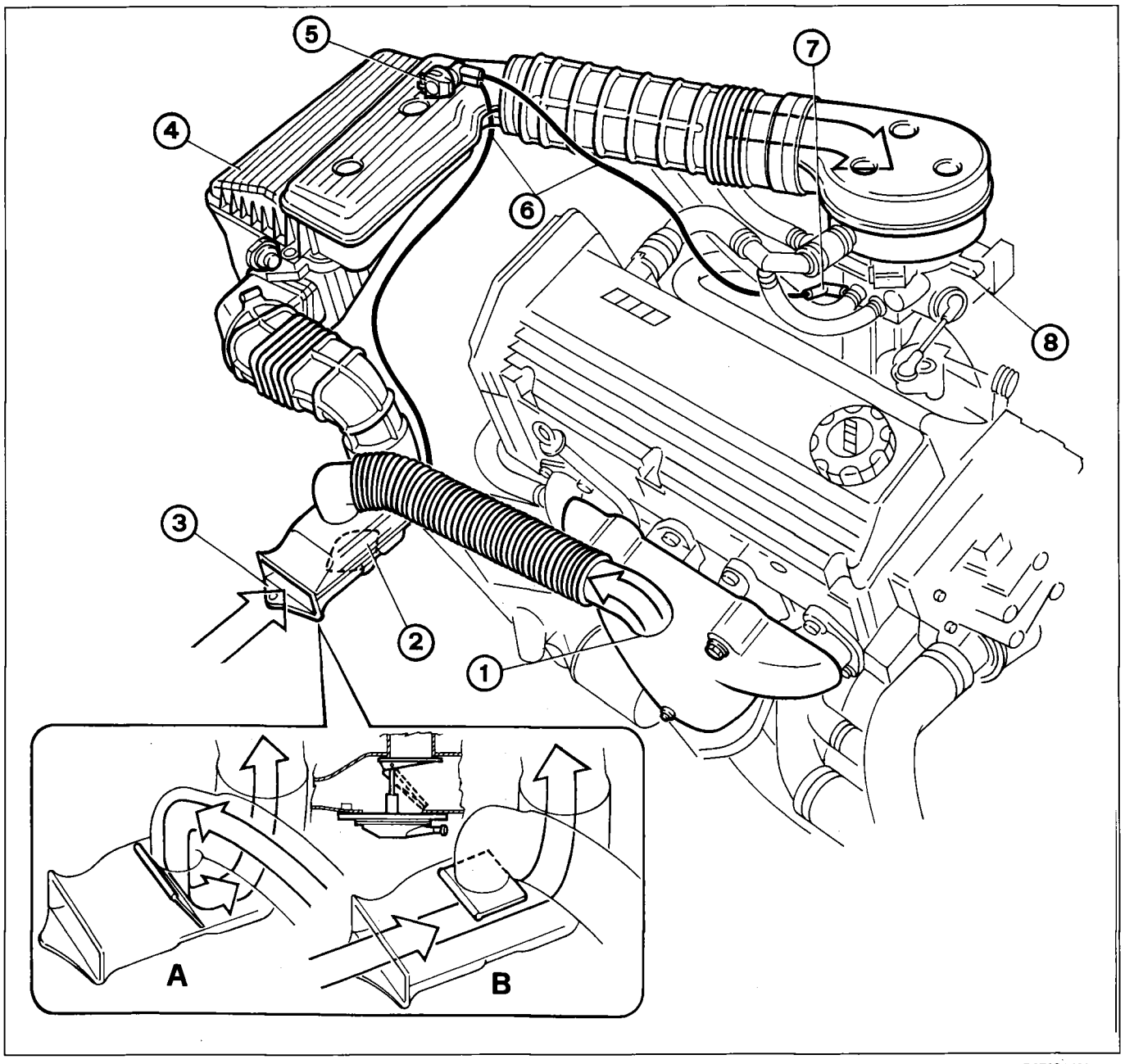

P4F13AJ01

1. "Hot" air intake on the exhaust manifold
2. Actuator for "hot/cold" air deflector
3. "Cold" air inlet vent
4. Air filter
5. Thermostatic valve
6. Vacuum ducts
7. Vacuum pick up
8. Butterfly casing

The air intake circuit is made up of various components which direct the air flow rate required by the engine in different operating conditions.
The intake of "hot" or "cold" air is dealt with by the deflector (2) which, according to the position of the thermostatic vale (5), may or may not be reached by the vacuum coming from the inlet manifold.
In particular, where the intake air temperature is above 9°C, the thermostatic valve (5) remains closed, not allowing the vacuum to reach the actuator (2) (position B).
Conversely, when the temperature of the intake air goes below 9°C, the thermostatic valve (5) opens, and the vacuum passing through it reaches the actuator (2) (position A).

Copyright by Fiat Auto

DIAGRAM SHOWING FUEL SUPPLY CIRCUIT

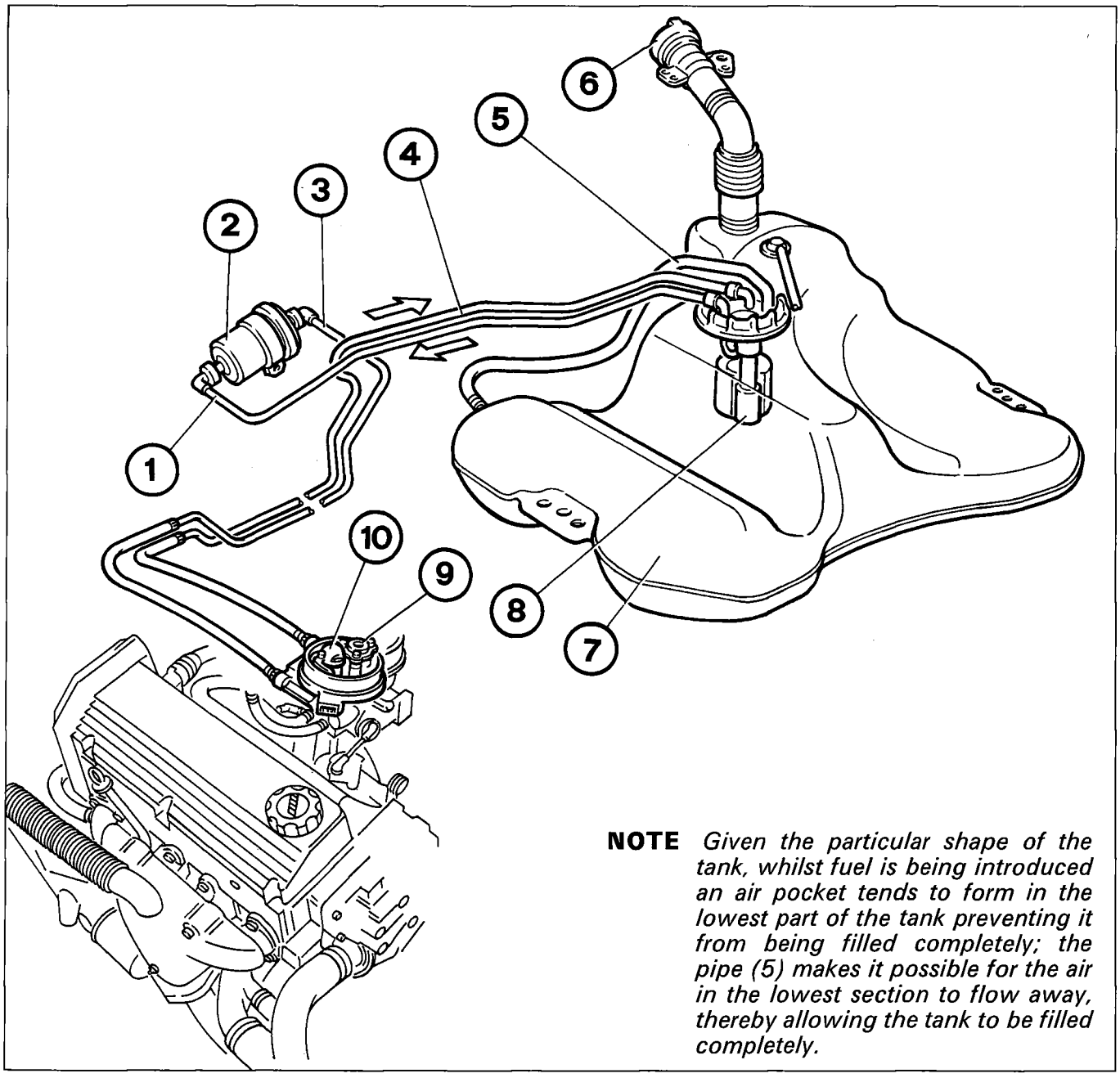

NOTE *Given the particular shape of the tank, whilst fuel is being introduced an air pocket tends to form in the lowest part of the tank preventing it from being filled completely; the pipe (5) makes it possible for the air in the lowest section to flow away, thereby allowing the tank to be filled completely.*

P4F14AJ01

1. Supply pipe from the tank to the filter
2. Fuel filter
3. Supply pipe from the filter to the injector
4. Return pipe
5. Breather pipe
6. Filler with ventilation and safety valve
7. Tank
8. Electric pump
9. Pressure regulator
10. Injector

The supply of fuel is ensured by means of an electric pump (8) immersed in the tank (7) which draws in the fuel and sends it to the filter (2) and then to the injector (10) passing through the pressure regulator (9) which has the task of keeping the fuel supply pressure to the injector constant. The excess fuel flows from the fuel regulator to the tank, not under pressure.

DIAGRAM SHOWING FUEL ANTI-EVAPORATION CIRCUIT

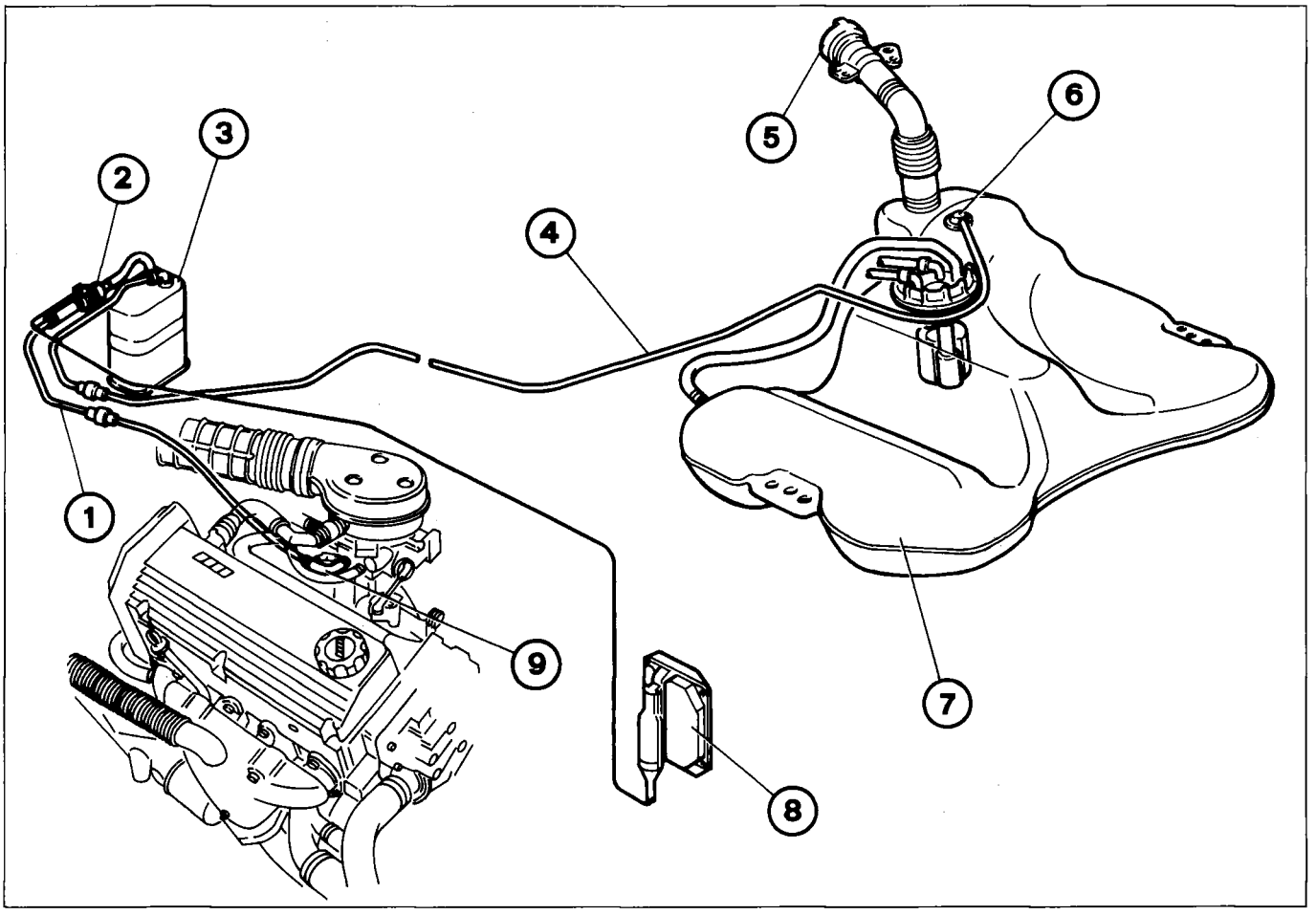

P4F15AJ01

1. Fuel vapour supply pipe to the butterfly casing
2. Fuel vapour cut out solenoid valve
3. Charcoal filter
4. Fuel vapour supply pipe from the tank to the charcoal filter
5. Safety and ventilation valve
6. Multi-purpose valve
7. Tank
8. Injection/ignition control unit
9. Fuel vapour inlet in the inlet manifold

The anti-evaporation system has the task of preventing the fuel vapours, composed of the lightest fractions of hydrocarbons, which basically form in the tank, from being discharged into the atmosphere. The system operates, above all at high outside temperatures when the temperature of the fuel increases and consequently the tendency towards evaporation increases: in this situation the pressure inside the tank increases.
When the pressure inside the tank reaches around 30-40 mbar, the multi-purpose valve (6) opens and the fuel vapours reach the charcoal filter (3). The valve (6) also allows an air intake into the tank through the charcoal filter if it proves necessary following a decrease in the level of the fuel and the consequent vacuum which is formed inside the tank. On the other hand, if there is a great deal of splashing during driving or the vehicle overturns, the valve (6) closes preventing the fuel from escaping.
When the engine is running, the control unit (8) operates the solenoid valve for the charcoal filter (2), which allows the intake of vapours by the engine and the consequent scavenging of the charcoal filter.
If as a result of the malfunction of any of the components, the pressure inside the tank increases dangerously, the safety valve (5) located in the cap allows the pressure to be discharged outwards. If necessary, this valve can open in the opposite direction to ventilate the tank and prevent the vacuum from reaching excessive values.

Copyright by Fiat Auto

DIAGRAM SHOWING RECIRCULATION OF GASES COMING FROM THE ENGINE CRANKCASE (BLOW-BY)

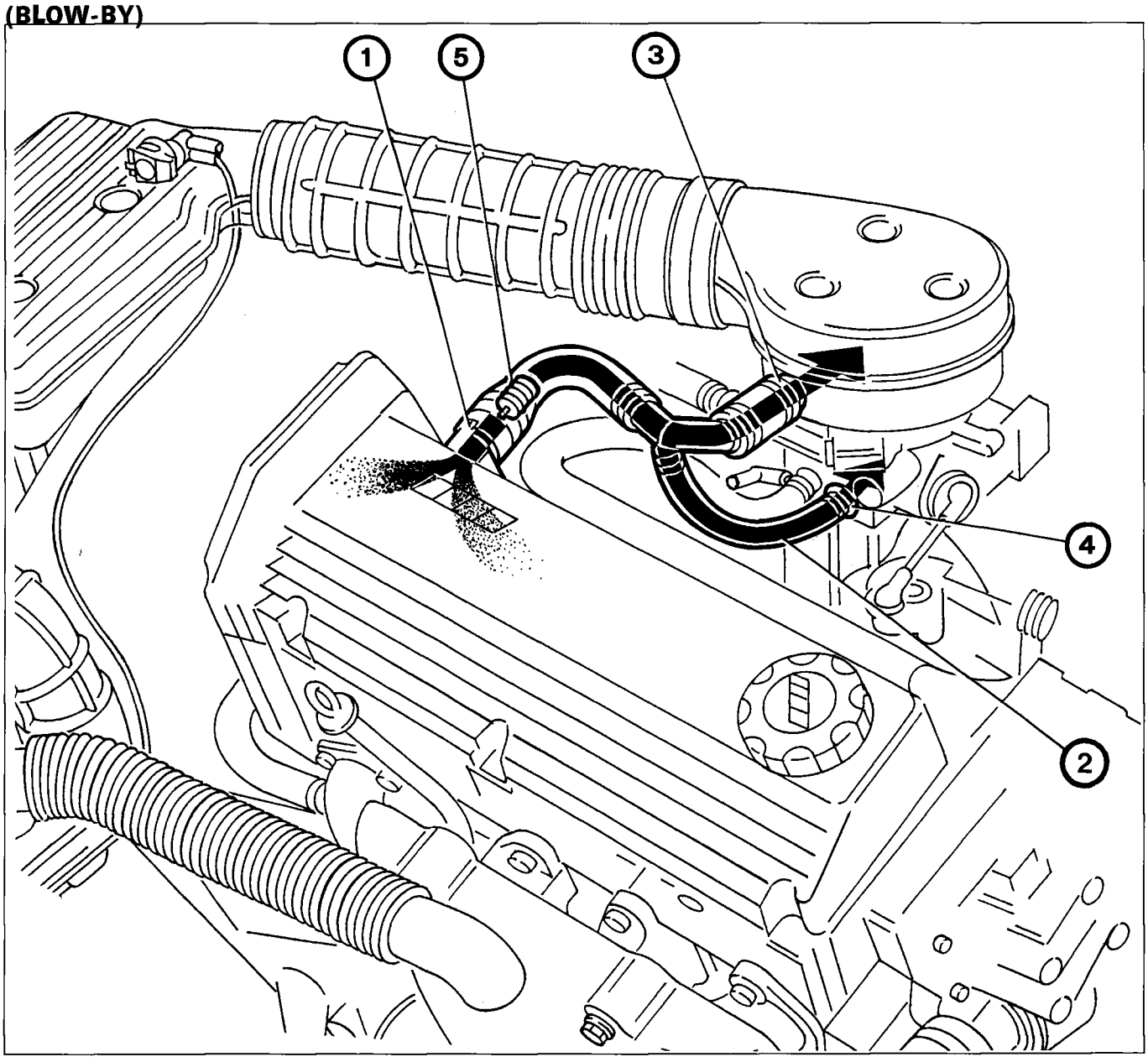

P4F16AJ01

The system controls the emissions, from the engine crankcase, of breather gases made up of air/petrol mixtures and unburnt gases which come through the piston seals, as well as lubricant oil vapours, recirculating them to the inlet.

The gases come out of the inlet (1) which contains a spark-out (5) to prevent combustion due to flame returns from the butterfly casing.

With the accelerator butterfly open, the gases are drawn in upstream of the butterfly through the inlet (3) on the air duct to the butterfly casing.

With the accelerator butterfly closed, (engine idling), the pressure downstream of the butterfly, draws in the gases (in limited quantities) directly through the small pipe (2) and the calibrated port (4).

ENGINE EXHAUST ASSEMBLY DIAGRAM

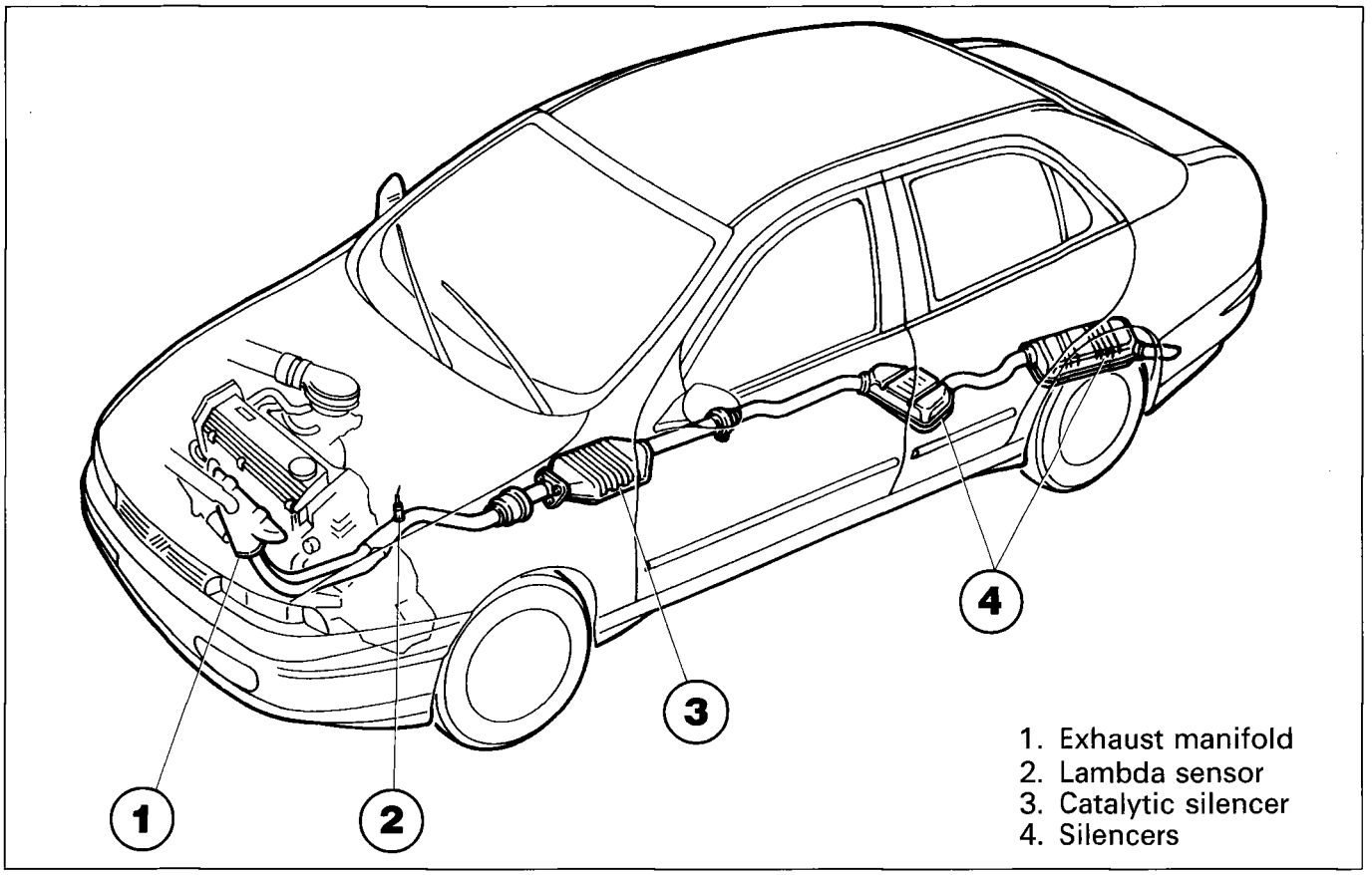

P4F17AJ01

The system shown in the diagram allows the metering of the air/petrol mixture to be close to the stoichiometric value.

The control of the mixture strength, which is the closed loop type, is activated by the Lambda sensor which measures the oxygen content in the exhaust gases upstream of the catalytic silencer.
The Lambda sensor measurements allow the electronic control unit to constantly correct the quantity of petrol injected thereby keeping the air/fuel ratio constant.
The control of the harmful exhaust emissions is carried out in this way and is completed by the three way catalytic converter (catalytic silencer).
The efficient operation of the catalytic silencer and consequently the restriction of the toxicity of the exhaust gases depends on the air/fuel ratio with which the engine is supplied.
The three way catalytic converter makes it possible to simultaneously restrict the three pollutant gases present in the exhaust gases: unburnt hydrocarbons (HC), carbon monoxide (CO), nitrous oxides (NOx).
Two types of chemical reaction take place inside the converter:
- oxidation of the CO and the HC, converted into carbon dioxide (CO_2) and water (H_2O);
- reduction of the NOx, converted into nitrogen (N_2).

The following will put the catalytic converter out of use very quickly and make it irreparable:
- the presence of lead in the petrol which lowers the degree of conversion to levels which make the presence of the catalytic converter in the system pointless;
- the presence of unburnt petrol in the converter: in effect, a flow of petrol lasting 30 sees in an ambient of 800 °C (temperature inside the silencer) is sufficient to cause the catalyzer to melt and break.

It is absolutely vital for the injection/ignition system to be working perfectly, therefore **the spark plug leads should not be disconnected with the engine running for any reason and in the case of tests the catalytic converter should be replaced with an equivalent section of pipe.**

INJECTION/IGNITION SYSTEM WIRING DIAGRAM

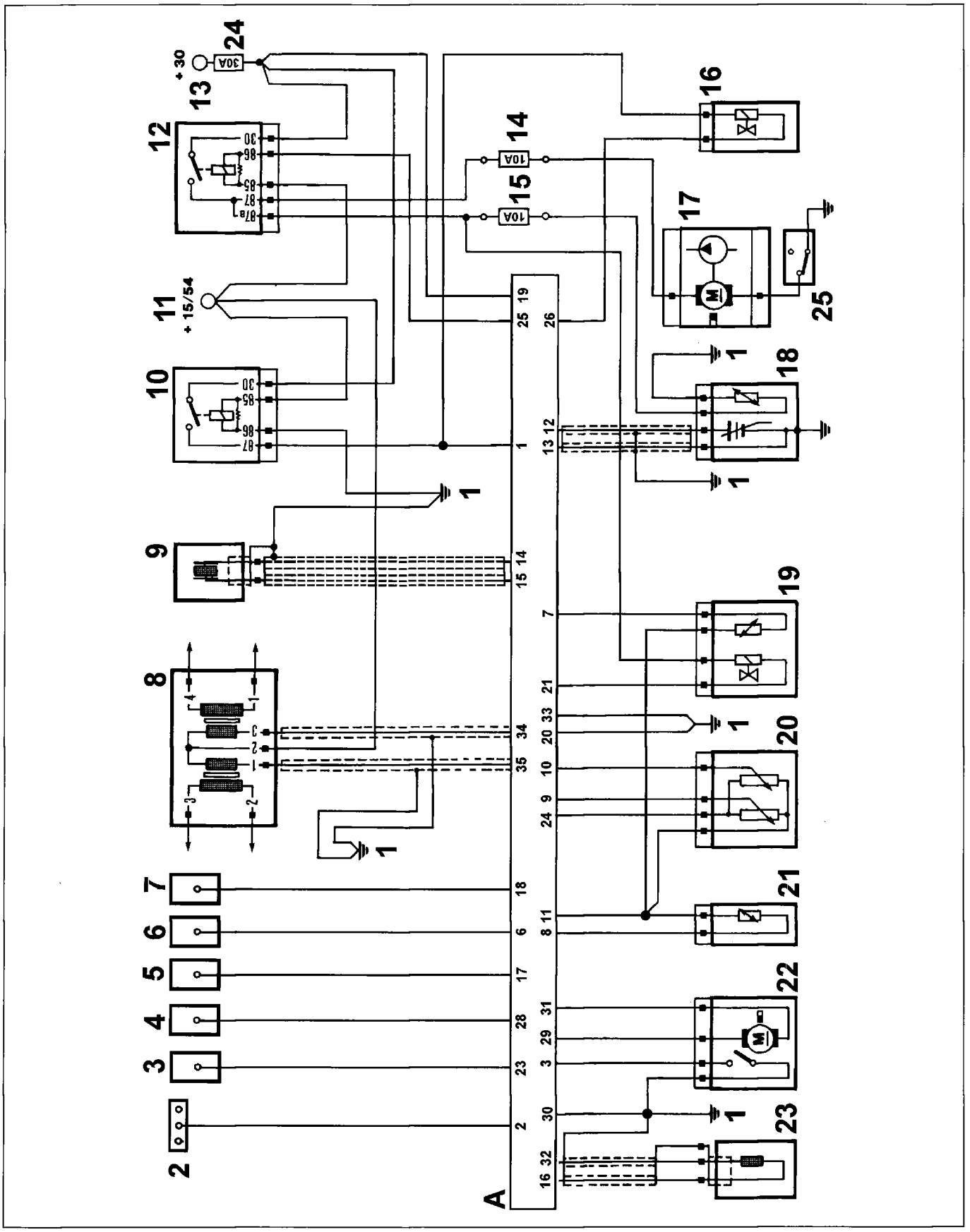

Injection/ignition system wiring diagram components key

A. Injection/ignition electronic control unit
1. Earth
2. Diagnostic socket
3. Climate control system connection
4. Injection/ignition system failure warning light
5. Rev counter
6. Fiat CODE control unit
7. Speedometer signal
8. Ignition coil
9. Detonation sensor
10. Injection/ignition system relay feed
11. Ignition switch
12. Electric fuel pump and Lambda sensor relay feed
13. Battery positive (+30)
14. 10A protective fuse for electric fuel pump
15. 10A protective fuse for Lambda sensor heating resistance
16. Fuel vapour cut out solenoid valve
17. Electric fuel pump
18. Heated Lambda sensor
19. Injector and intake air temperature sensor
20. Butterfly valve position sensor
21. Coolant temperature sensor
22. Engine idle speed actuator
23. Rpm and TDC sensor
24. General 30 A protective fuse for the injection/ignition system
25. Inertia switch

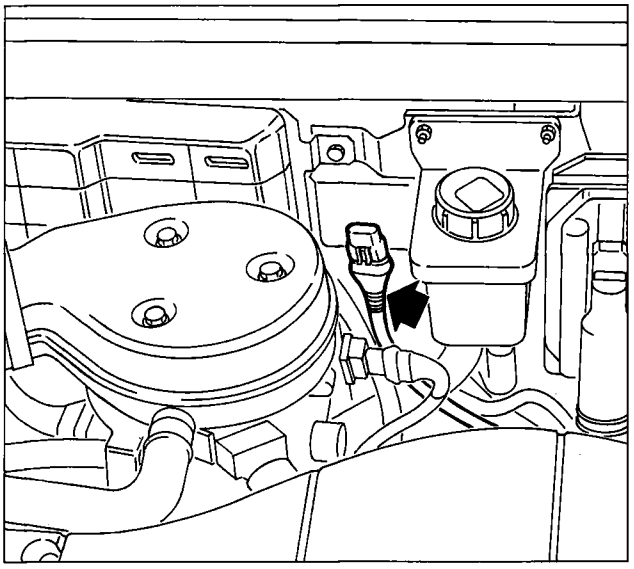

P4F19AJ01

Location of diagnostic socket

LOCATION OF INJECTION/IGNITION SYSTEM COMPONENTS

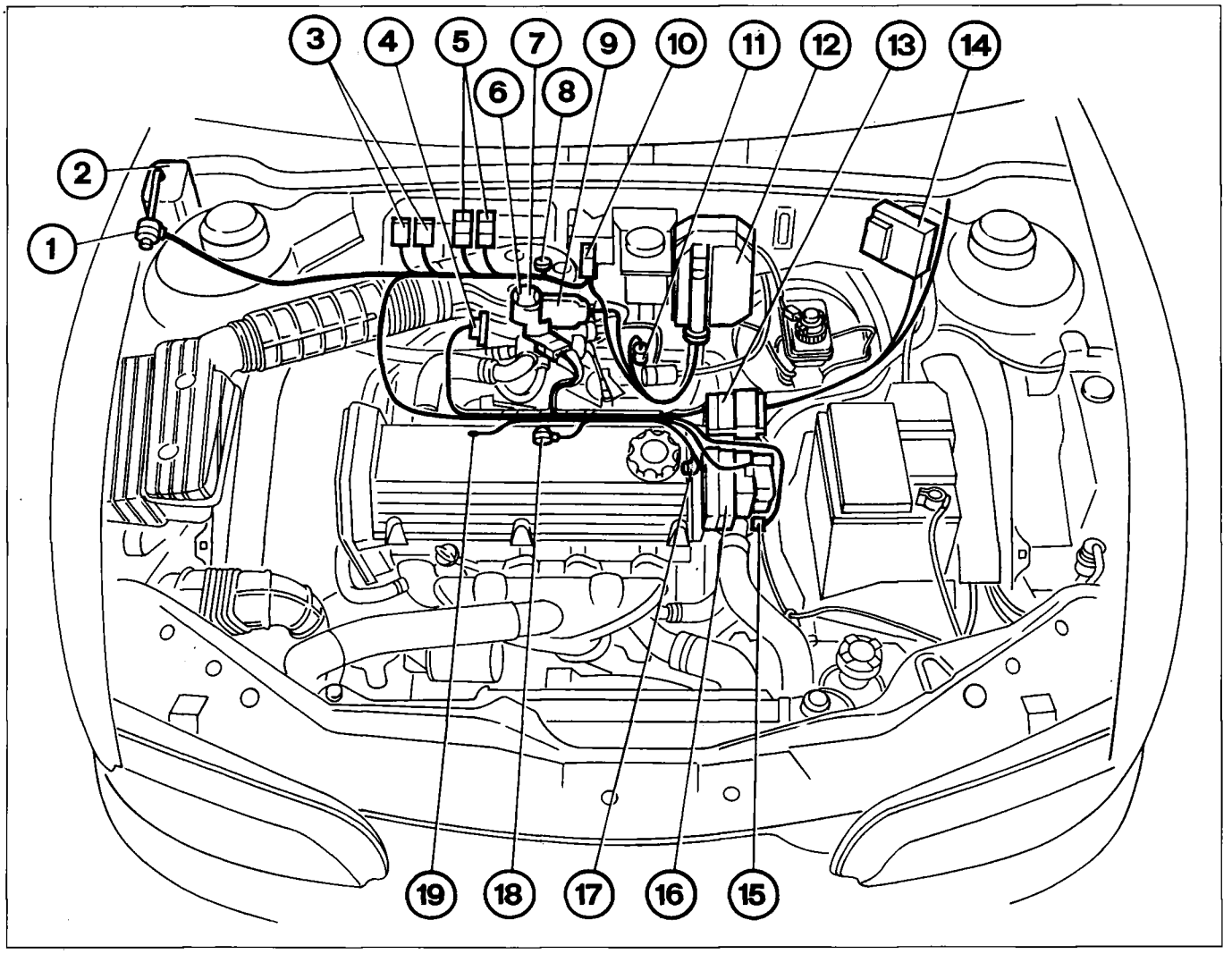

P4F20AJ01

Components key

1. Fuel vapour cut out solenoid valve
2. Charcoal filter
3. 10A protective fuse for electric pump and injection/ignition system
4. Butterfly valve position sensor
5. Electric pump and injection/ignition system relay feeds
6. Injector
7. Air temperature sensor
8. Fuel pressure regulator
9. Engine idle speed actuator
10. Diagnostic socket
11. Lambda sensor
12. Injection/ignition control unit
13. Join between injection cable and front cable
14. 30A general system protective fuse
15. Coolant temperature sensor
16. Ignition
17. Rpm and TDC sensor
18. Detonation sensor
19. Earth

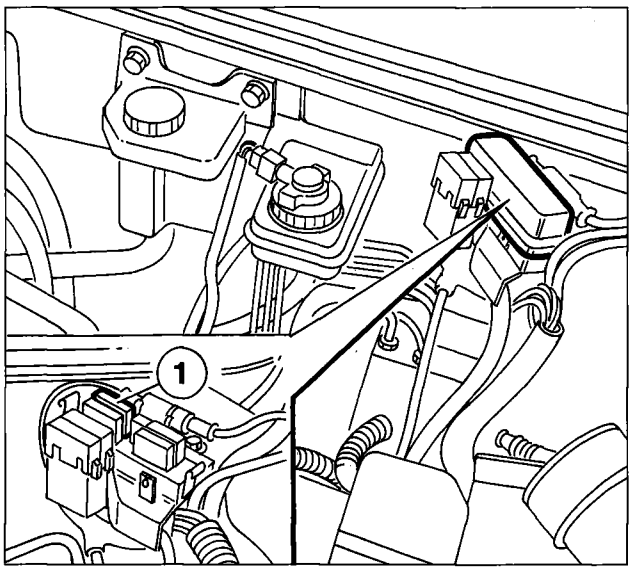

P4F21AJ01

INJECTION SYSTEM FUSES AND RELAYS

General system protective fuse

The general fuse (EFI-30A) protecting the injection/ignition system (1) is housed inside a container; to gain access, remove the cover undoing it from the side clips.

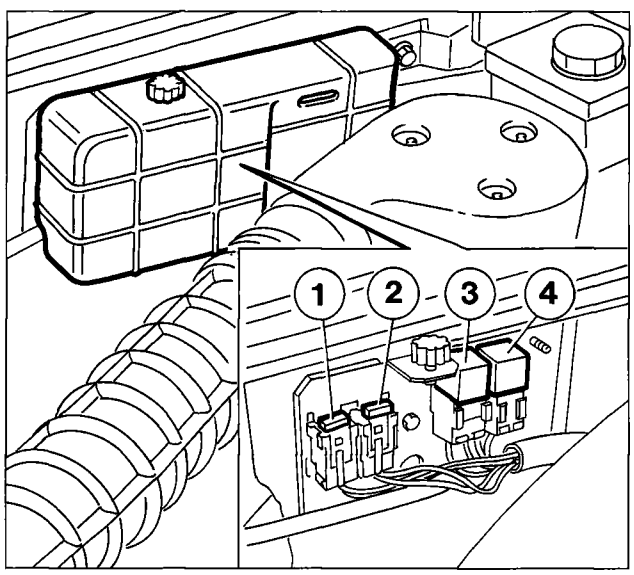

P4F21AJ02

Fuses and relays

The following components are housed on a bracket positioned against the rear partition of the engine compartment:

1. 10A protective fuse for electric fuel pump
2. 10A fuse protecting the Lambda sensor heated resistance
3. Injection/ignition control unit relay feed and fuel vapour cut out solenoid valve
4. Electric pump, injector and Lambda sensor relay feed.

To gain access to the components listed above, undo the ring nut and remove the cover.

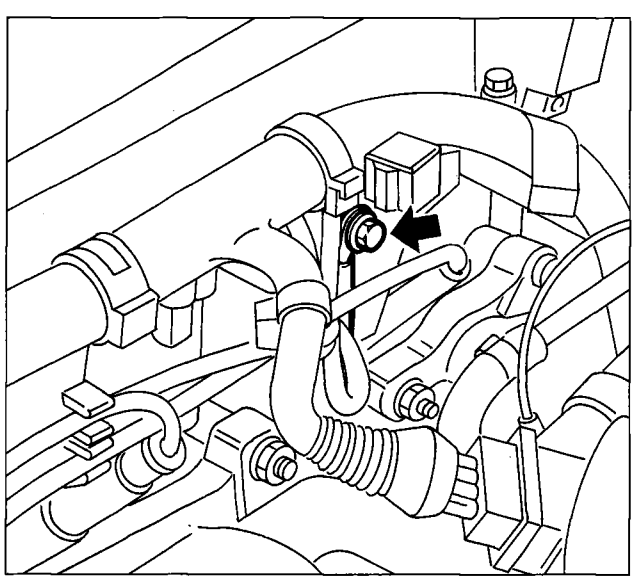

P4F21AJ03

EARTH POINT

The earth for the injection/ignition system is fixed at the right rear of the engine, near the spark plug for the first cylinder.

INJECTION/IGNITION SYSTEM COMPONENTS

The injection/ignition system is basically made up of wiring, an electronic control unit (I.E. control u nit) and the following sensors/actuators:

Sensors
- Speedometer sensor
- Rpm and T.D.C. sensor
- Detonation sensor
- Coolant temperature sensor
- Butterfly valve position sensor
- Intake air temperature sensor
- Lambda sensor

Actuators
- Engine idle speed actuator
- Fuel vapour cut out solenoid valve
- Electric fuel pump
- Injector
- Ignition coil
- Spark plugs

INJECTION/IGNITION SYSTEM WIRING

The different system components are connected by means of one set of wiring fitted with various type connectors, grouped together in special ducts fitted on the engine (pre-wiring).

INJECTION/IGNITION ELECTRONIC CONTROL UNIT (0.261.203.868)

The electronic control unit analyzes the data concerning the engine operating conditions which is transmitted by the sensors; it processes the signals arriving from the peripheral sensors and, with the aid of programmed diagrams, controls the impulses for the injector and the moment of ignition.
It is connected to the system by means of a 35 pin connector and is protected from false polarity and short circuits.
The electronic control unit can detect the failed operation of the different sensors and replace the incorrect or unreceived data with values taken from appropriate areas of the memory capable of guaranteeing the operation of the engine even in emergency conditions; in addition, it is also equipped with an AUTODIAGNOSTIC strategy for both the input and output sensors with a special memory for detecting any problems which are then transmitted during the fault diagnosis.
Therefore, with the help of the Fiat/Lancia TESTER connected to the system, it is possible to automatically diagnose or display any errors present in the memory.
Another important feature of the control unit is the self-adjustment. This function makes it possible for the system to recognize and, by means of appropriate strategies, adapt to the various changes (ranging from atmospheric to those which stem from the wear of the components) which could cause irregular operation of the engine.

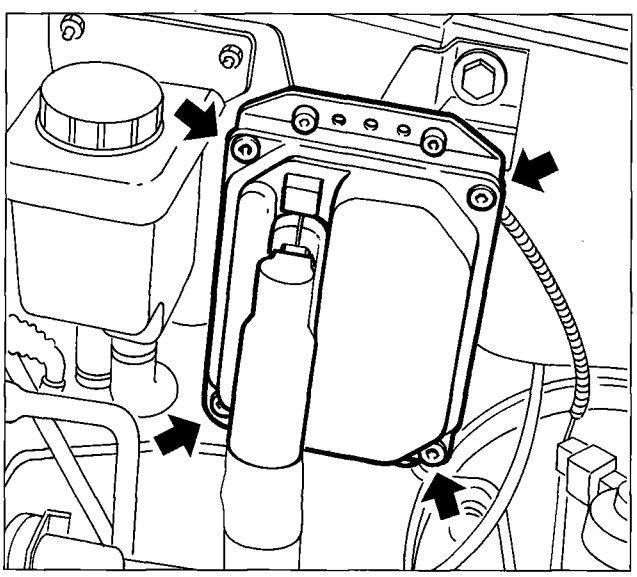
P4F22AJ01

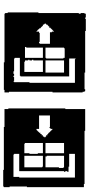

Removing-refitting control unit

Disconnect the electrical connector. Undo the fixing nuts and remove the control unit.

It is absolutely forbidden to exchange injection control units between different vehicles to check their efficiency.

During fault diagnosis, before replacing the control unit, make sure that the component being examined really is not working properly because when a new control unit is supplied the secret code for the Fiat CODE system is memorized which makes it totally impossible to use it in other vehicles.

IDENTIFICATION OF CONTROL UNIT CONNECTIONS (PIN-OUT)

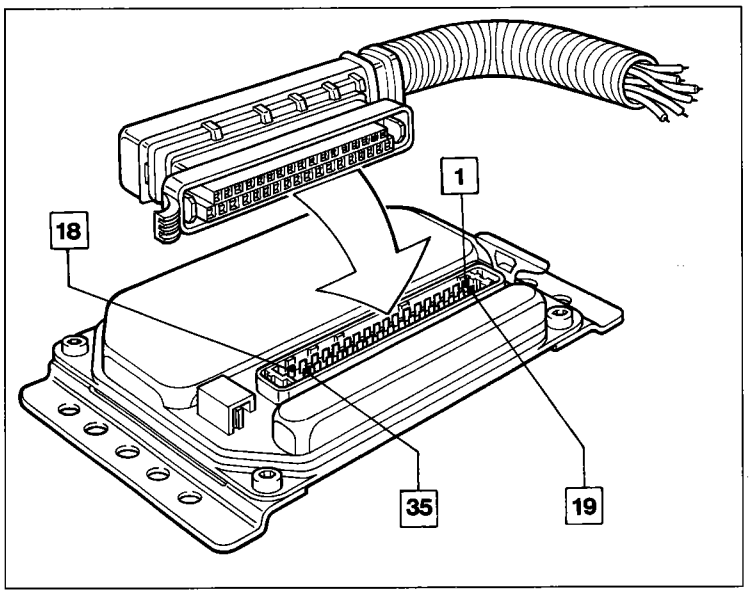

P4F23AJ01

1. I.E. system relay feed
2. Diagnostic socket
3. Engine idle speed actuator
4. Not connected
5. Not connected
6. Fiat CODE control unit
7. Intake air temperature sensor
8. Engine coolant temperature sensor
9. Butterfly valve position sensor
10. Butterfly valve position sensor
11. Coolant temperature sensor, butterfly valve position sensor and intake air temperature sensor supply
12. Lambda sensor
13. Lambda sensor
14. Detonation sensor
15. Detonation sensor
16. Rpm and TDC sensor
17. Rev counter signal
18. Speedometer sensor
19. Supply (+30)
20. Engine earth
21. Injector
22. Not connected
23. Climate control system connection
24. Butterfly valve position sensor
25. Electric fuel pump relay feed and Lambda sensor
26. Fuel vapour cut out solenoid valve
27. Not connected
28. Injection system failure warning light
29. Engine idle speed actuator
30. Engine earth
31. Engine idle speed actuator
32. Rpm and TDC sensor
33. Engine earth
34. Ignition coil
35. Ignition coil

Copyright by Fiat Auto

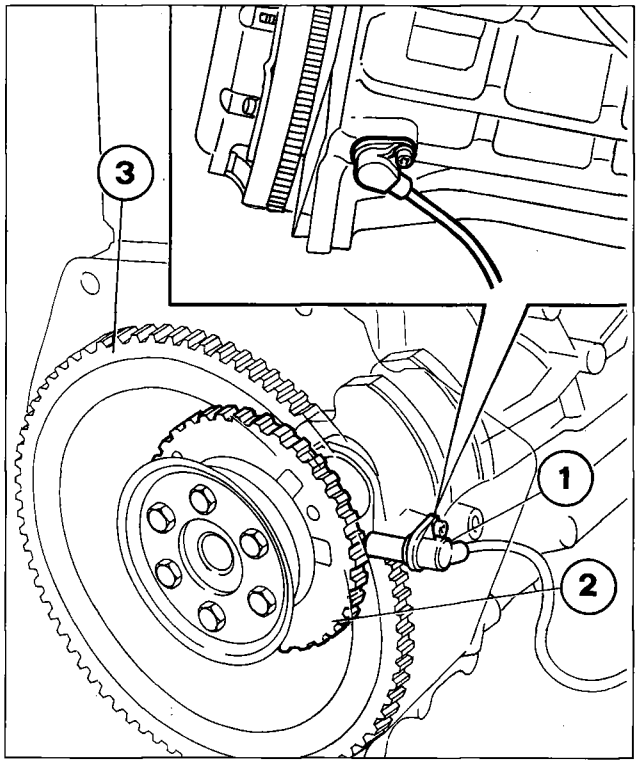

P4F24AJ01

1. Rpm sensor
2. Toothed pulley
3. Engine flywheel

RPM AND TDC SENSOR (0.281.002.102)

The sensor which detects the number of revs and the TDC is the inductive type, i.e. it operates by varying the magnetic field produced when the teeth pass in front of a toothed pulley (flywheel) inside the engine crankcase. In this waythe sensor is fixed to the crankcase and it is no longer necessary to check and adjust the gap and the angular position.

The teeth which pass in front of the sensor, alter the gap between the pulley and the sensor; the dispersed flow, which varies as a consequence, produces an alternating voltage whose range depends on the number of revs.

The flywheel is made up of 58 teeth plus a space equivalent to the two missing teeth.

The reference defined by the space of the two missing teeth makes up the basis for detecting the synchronims point (TDC).

For a more detailed description of the operating principle, refer to the Fuel System section for the 1581 16v engine.

Removing-refitting

Position the vehicle on a lift, then, working from the lower part of the vehicle:

- Disconnect the electrical connector;
- undo the bolt fixng the sensor and remove it from its housing.

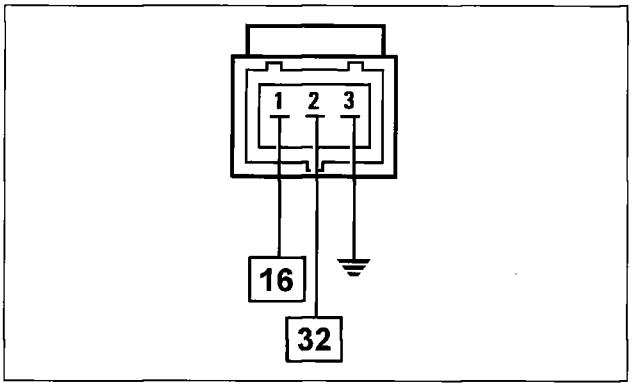

P4F24AJ02

Wiring connector

The sensor is connected to the electronic control unit (pins 16 and 32) by means of twisted cables with an outer casing to protect against interference connected to earth.

NOTE *The numbers indicate the corresponding control unit pins.*

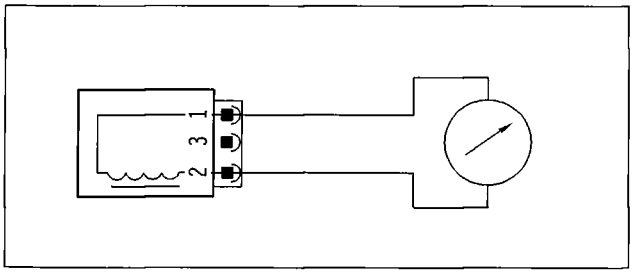

P4F24AJ03

Checking the resistance

The resistance of the sensor may be measured by disconnecting the connector and connecting an ohmmeter to the sensor.

Resistance: 774-946 ohm at 20°C

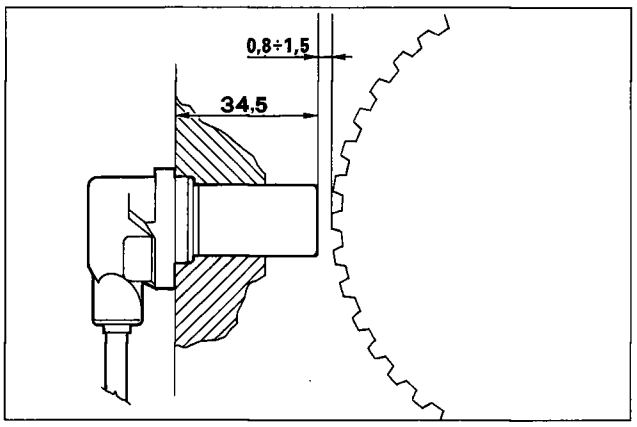

P4F25AJ01

When measuring the distance it is necessary to be sure to be at right angles with the flywheel and corresponding to a tooth and not a gap.

Checking the gap

The rpm and TDC sensor is fixed directly to the engine crankcase and the gap and the angular position do not therefore have to be adjusted. If an irregularity is suspected it is, however, possible to check the gap by proceeding as follows:

- remove the rpm and TDC sensor;
- check that the distance between the surface of the sensor and the flywheel tooth corresponds to the sum of the length of the sensor (34.5 mm) with the gap (0.8 - 1.5 mm).

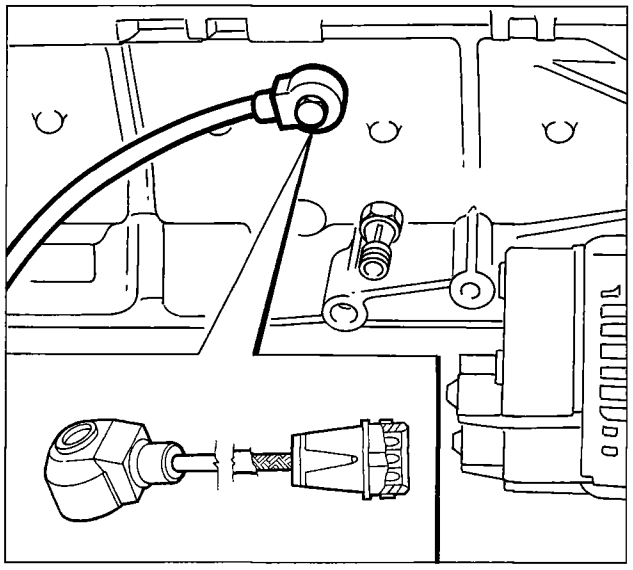

P4F25AJ02

DETONATION SENSOR (0.261.203.007)

The detonation sensor is located at the rear of the monobloc, between cylinders 2 and 3.

For a more detailed description of thel operating principle of the detonation sensor, refer to the fuel system section for the 1998 20v version.

Recovery

Delay of the ignition advance: 8° - 9° depending on the engine speed.

De-activation of the control of the detonation.

If the failure involves the interface circuit with the sensor, the control unit imposes a dealy in the ignition advance equal to 10°.

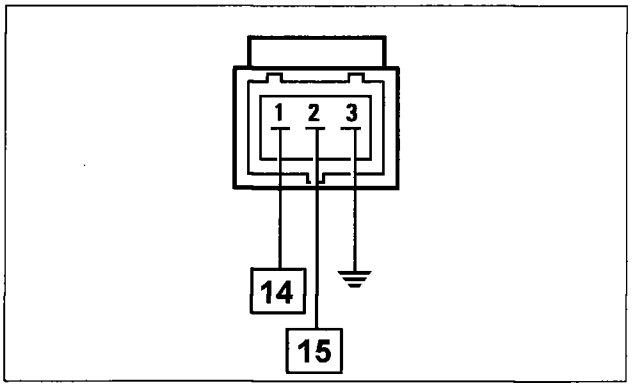

P4F25AJ03

Wiring connector

The numbers indicate the corresponding control unit pins.

BUTTERFLY CASING (0.438.201.523)

The aluminium butterfly casing or injector holder turret has extremely tiny components and is very compact. Most of the system sensors and actuators are fitted on it:

1. Fuel inlet connector
2. Fuel return connector
3. Accelerator butterfly position sensor (potentiometer)
4. Fuel pressure regulator
5. Intake air temperature sensor
6. Injector
7. Direct current motor for controlling idle speed
8. Micro-switch regognizing closed butterfly valve position incorporated in the motor (7)
9. Butterfly position adjustment screw (not to be tampered with)
10. Oil vapour recirculation connector coming from engine crankcase (BLOW-BY)
11. Connector for inlet of fuel vapours coming from the charcoal filter through the fuel vapour cut out valve
12. Connector for thermal valve operating vacuum on the air filter

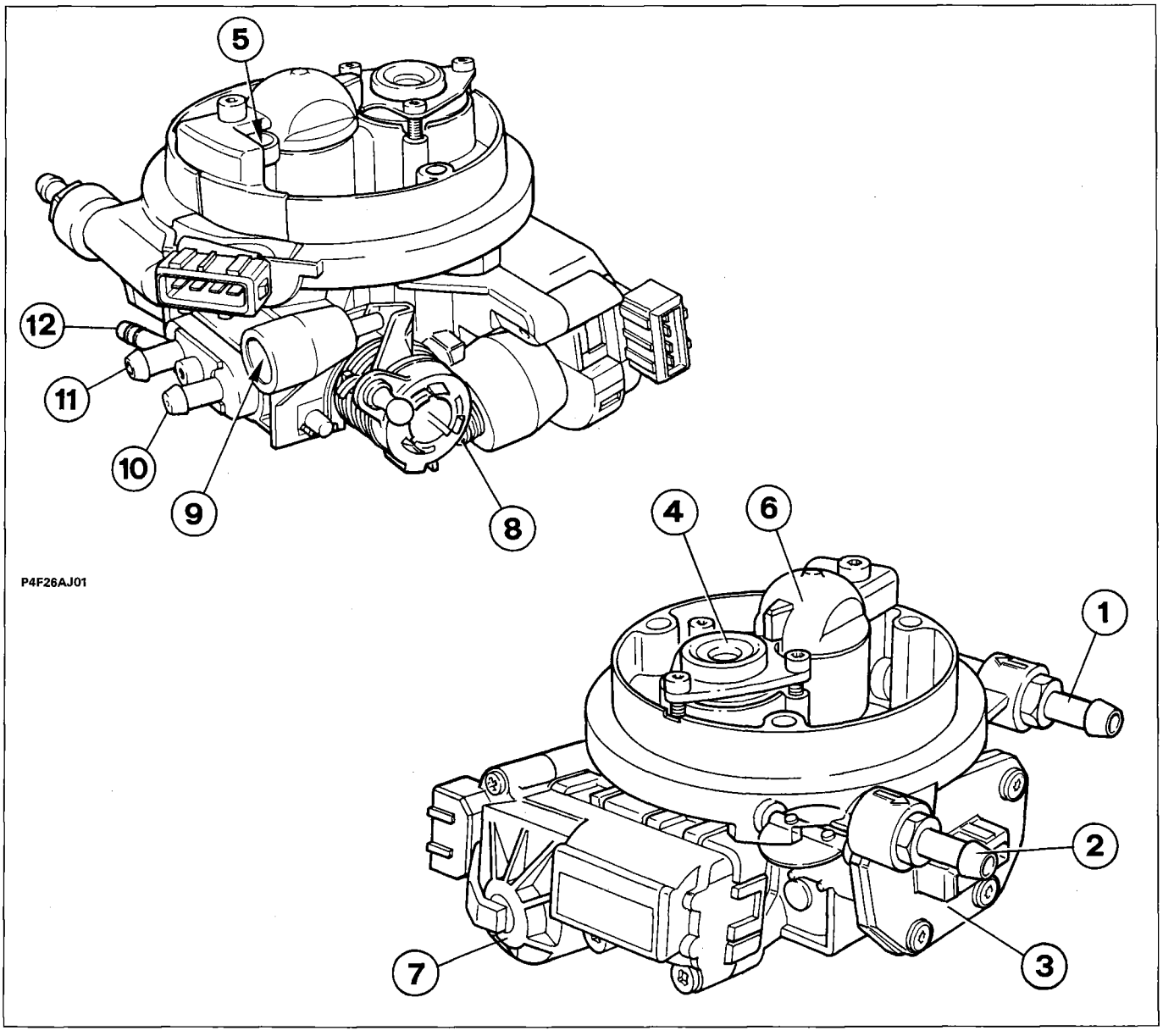

P4F26AJ02

Butterfly valve opening angle sensor

The angular position signal (α) for the butterfly (1), plays a fundamental role in determining the basic injection times.

This signal is measured on a twin track potentiometer (2) fitted on the butterfly casing (3) by means of a brush with twin combs (4) fixed to the butterfly valve shaft (5).

In order to avoid sticking or errors when measuring the angle α, the butterfly shaft is fitted on two ball bearings (6).

The potentiometer (2) is already adjusted in relation to the butterfly casing when it is fitted in the factory and should not be removed for any reason; in the case of a failure, the complete butterfly casing must be replaced.

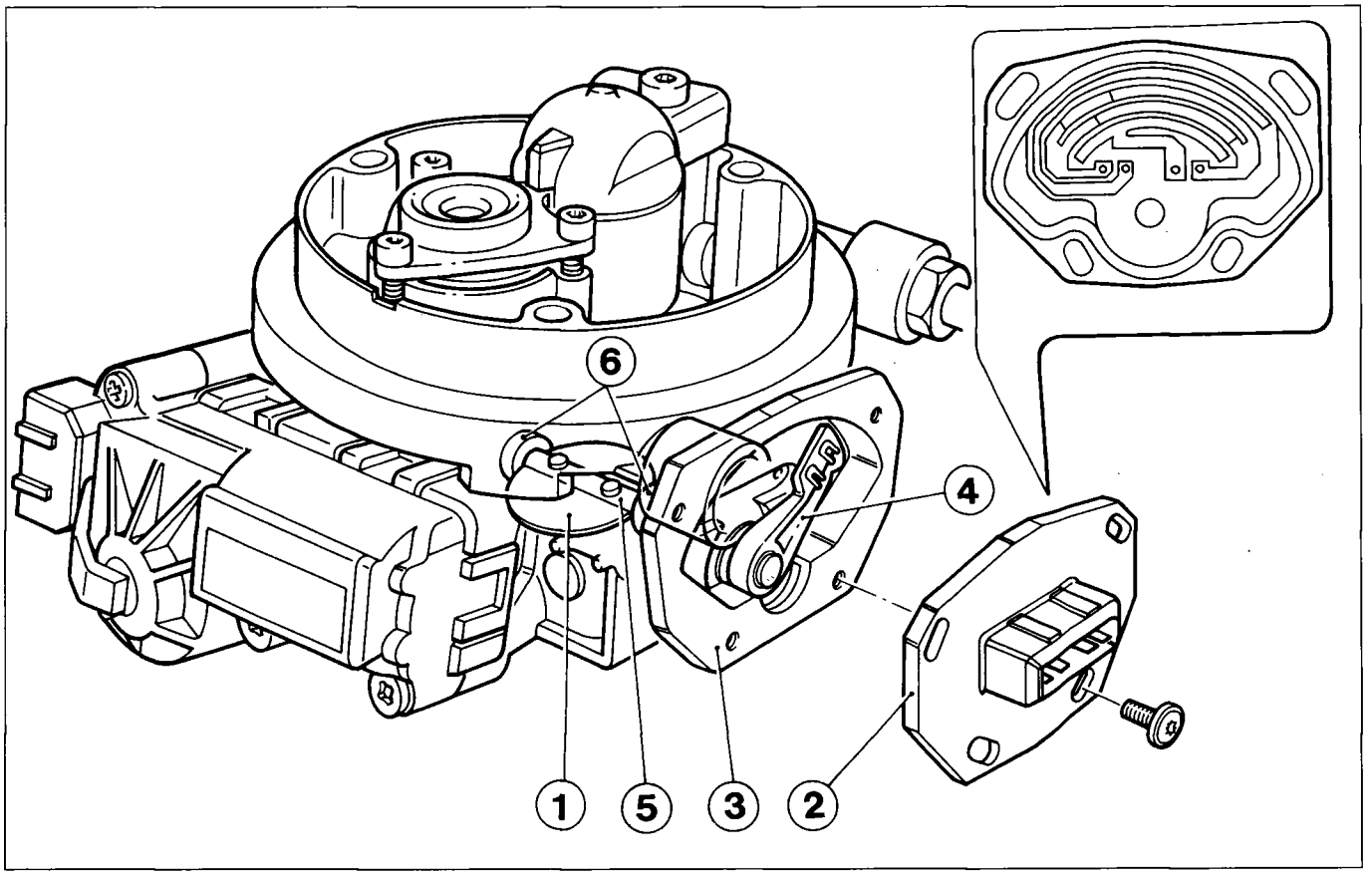

P4F27AJ01

The control unit (A - see diagram overleaf), provides terminal 5 of the butterfly valve opening angle sensor (B) with a (constant) reference voltage of around 5 V via terminal 24.

A voltage signal measured at the first track (C) is sent from terminal 2 of the potentiometer to terminal 9 of the control unit; it is proportional to the positions assumed by the butterfly in the first 24° (0° ÷ 24°) of opening.

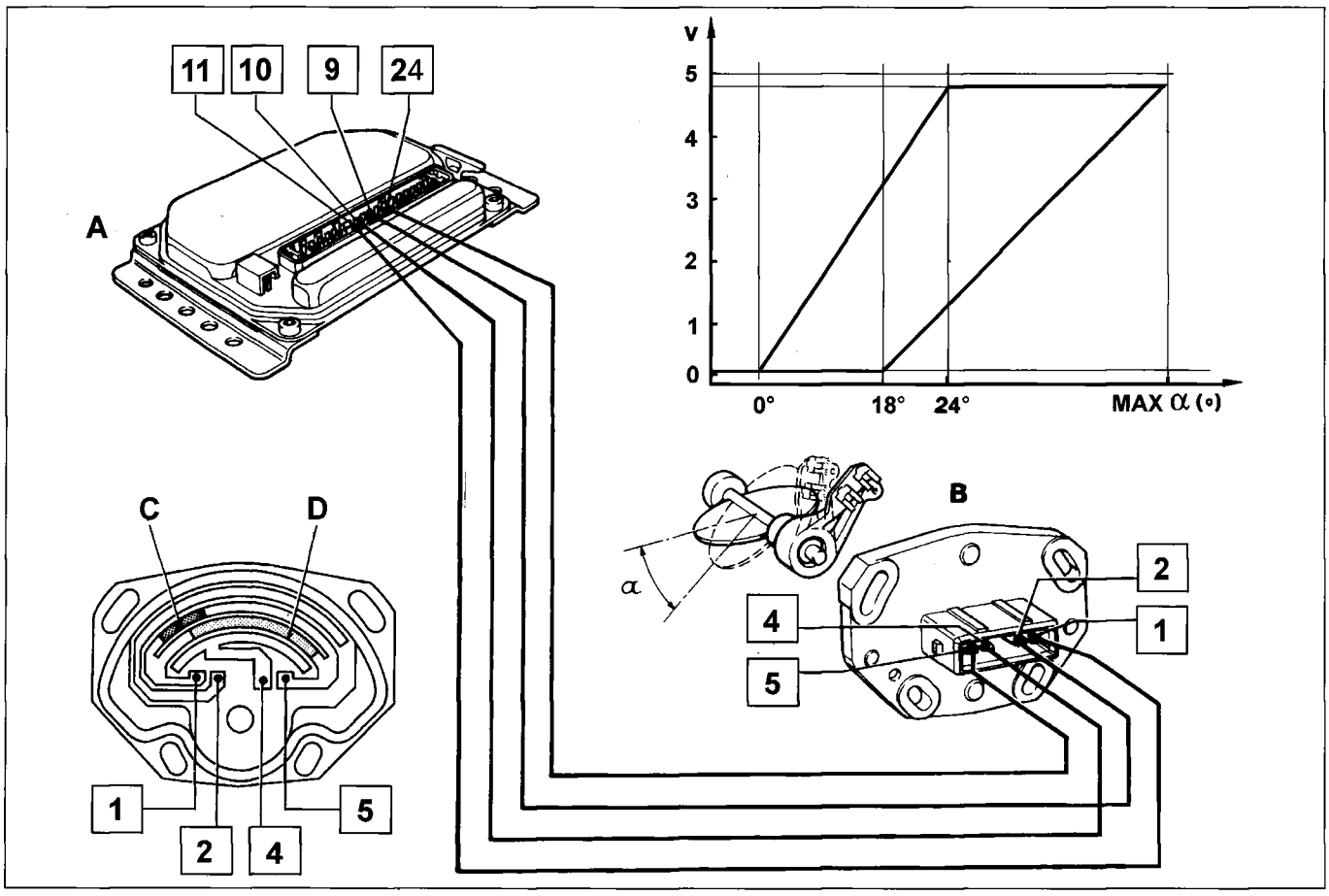

P4F28AJ01

Therefore, the value of the signal is close to 0 Volt when the butterfly is completely closed, and approximately 5 Volt for an opening of 24° in the rest position.

In the butterfly valve opening range between 0° - 24°, there are 10 corresponding reference points in the control unit map (α), which represent the same number of significant positions assumed by the butterfly valve. In this way, the electronic control unit can recognize small angular variations of around 2°25'.

This sensitivity allows the control unit to select the basic injection times in the specific map with greater precision during the most critical engine operating conditions, i.e, during idling and in partial load conditions.

Starting from an 18° opening of the butterfly valve, until it is completely open (about 90°), the signal supplied by terminal 4 of the potentiometer (B) intervenes, i.e. the one for the second track (D).

This signal, sent to terminal 10 of the control unit, relates to the average and full load engine operating conditions.

The range of the second track is divided in the control unit map α with less resolution compared with the one for the first track, i.e. in 5 points corresponding to angular variations of around 13° of the butterfly valve. Therefore, for the entire opening of the butterfly valve there are 15 significant points or openings in the control unit which are recognized by the electronic system by means of the two potentiometer tracks.

At butterfly valve opening angles of between 18° and 24°, the simultaneous presence of voltage signals at terminals 2 and 4, for the first and second tracks, respectively, should satisfy a given ratio.

The electronic control unit carries out the plausibility test, in the above conditions, to check the exact synchronization between the signals for the first track (C - minimum/partial load) and those for the second track (D - average load/full load).

Terminal 1 of the potentiometer is placed to earth in the control unit by terminal 11.

Recovery
The emergency/safety function relating to the potentiometer becomes operational when irregularities do not allow the electronic control unit to detect the actual butterfly valve opening angle (α).
- with faults in track 1 of the potentiometer, a pre-defined safety injection time and ignition advance are set and an emergency position for the idle adjustment motor is adopted.
- with faults in track 2, only a safety injection time and ignition advance are set.
- with synchronization faults the value for the last piece of information memorized is set, offset between the two tracks.

Direct current motor for controlling engine idle speed
The adjustment of the engine idle speed is controlled automatically by the electronic control unit via 12 V direct current electric motor (A) which, by means of a suitable reduction system, acts directly on the butterfly valve control levers (B).
There is a micro-switch (C) incorporated in the butterfly opening motor which is closed with the accelerator pedal in the rest position (released).
The closing of the contact activates the dual CUT-OFF function during the deceleration stage and the automatic adjustment of the idle.

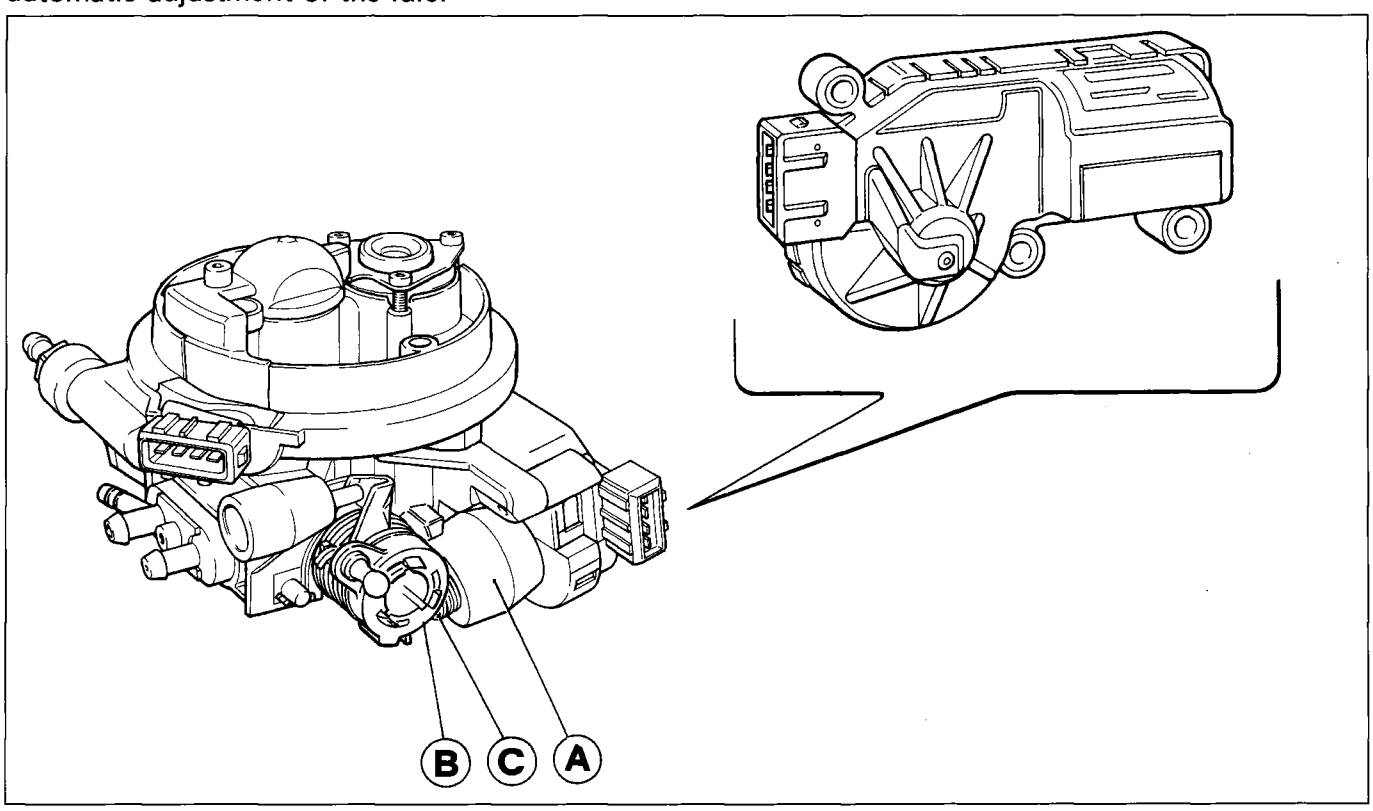

P4F29AJ01

The restoration of the injection impulses after a CUT-OFF stage and the activation of the engine idle adjustment function are managed by the control unit (A see diagram overleaf) in relation to the engine speed and the coolant temperature.
In addition, the electronics may also take other parameters into consideration, namely: the engine during starting or whilst it is warming up, whether the air conditioning is switched on.
The function of controlling the idle is activated by the closing of the contact (C in the diagram overleaf) which connects terminal 3 for the control unit to earth via terminals 3 and 4 for the motor (B) connector at point (I).
When necessary, the control unit supplies the adjustment motor (D), via terminals 31 and 29, so that the idle speed is corrected when the butterfly valve opens or closes.
An electronic switch inside the control unit reverses the polarity at the motor, as appropriate, in order to achieve the two directions of rotation (clockwise and anti-clockwise).

Copyright by Fiat Auto

When the motor (D) is supplied it causes the rotation of the reduction unit which comprises a worm screw (E) and a helical wheel (F).

Inside the helical wheel there is a female screw on which the micro-switch (G) casing is tightened/loosend so that it can extend/retract according to the direction of rotation of the actual wheel.

The total travel of the push rod (H), acting on the butterfly valve lever, can produce a maximum opening of around 18°.

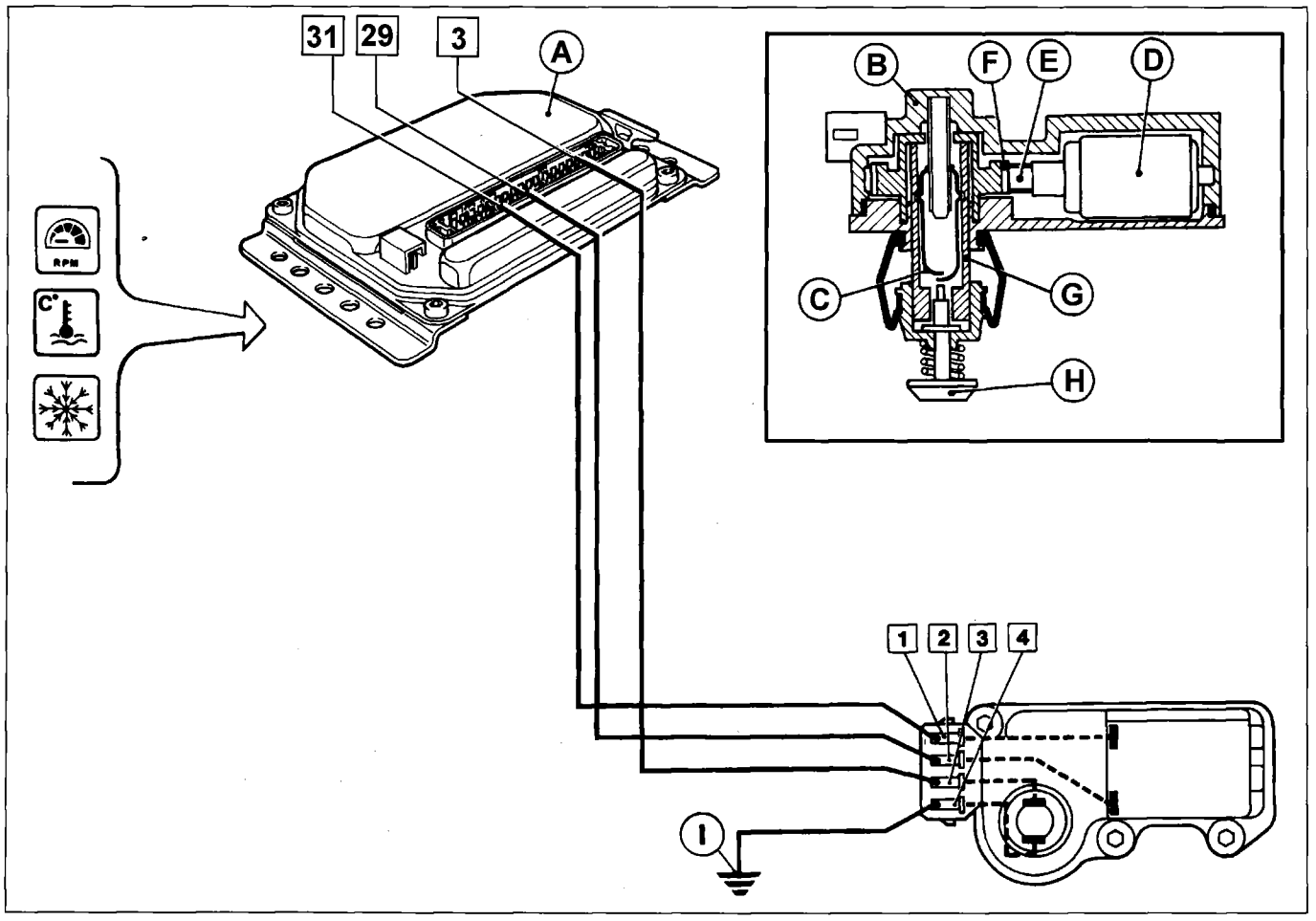

P4F30AJ01

Recovery

As a result of an error at the idle contact (short circuit or open circuit) the control unit implements two strategies according to the moment of recognition:

- recognition (open circuit) when the key is in the ON position with no recovery value (ignored);
- recognition (short circuit or open circuit) with key in ON position, the control unit will operate the direct current motor placing it in the safety position (butterfly idling).

On account of an error at the motor (motor stuck or defective, operating stage faulty or defective), detected by compaing the operating value withthe effective position in closed idle contact conditions, the control unit restricts the number of revs which varies between 1400 and 2000 rpm.

Injector

The injector has the task of atomizing the fuel required to form the fuel mixture. It is made from stainless so it is resistant to any impurities which may be present in the fuel; it is located centrally on the injector holder turret above the butterfly valve.

It is made up of an outer casing (1) which contains a winding (2) with a ferromagnetic core (3) and a spring (4) which has the task of keeping the shutter (5) in a closed position in the housing in the casing (6). The assembly is completed by the following components: the electrical contacts (7), the fuel inlet duct (8) and filter (9) and the fuel outlet duct (10) and filter (11).

The control impulses, coming from the electronic control unit, reache the injector by means of electrical contacts (7) creating a magnetic field at the core (3) through the winding (2), raising the shutter (5) from its seat, overcoming the opposing spring (4) loading and causing the opening of the injector.

The shutter lift is 0.06 mm (distance **x**); taking the physical characteristics of the fuel as constant, the quantity injected depends only on the opening time of the injector (injection time) which is established by the electronic control unit according to the engine usage conditions.

The jet of fuel, which comes out of the injector at a pressure of around 1 bar, is instantly atomized forming a cone of between 30° and 90° and is injected upstream of the accelerator butterfly. The operation of the injector is the synchronous type, i.e. one injection for each ignition.

There is a port (12) at the accelerator butterfly which has the function of optimizing the distribution of the mixture in the inlet manifold whilst the engine is warming up.

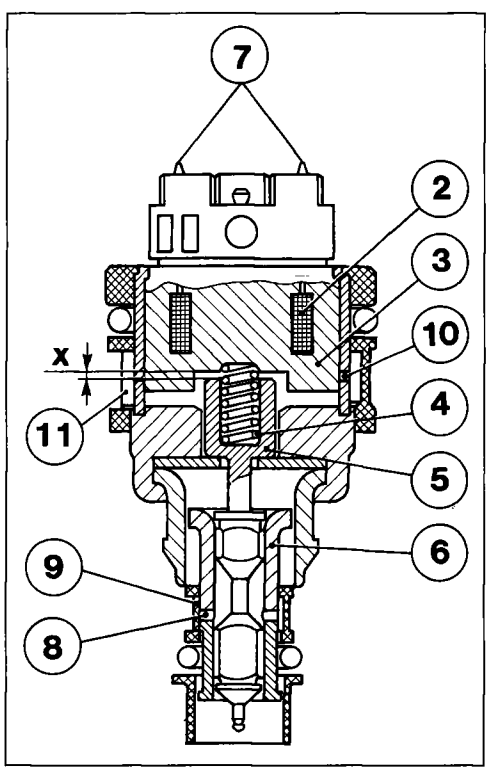

P4F31AJ01

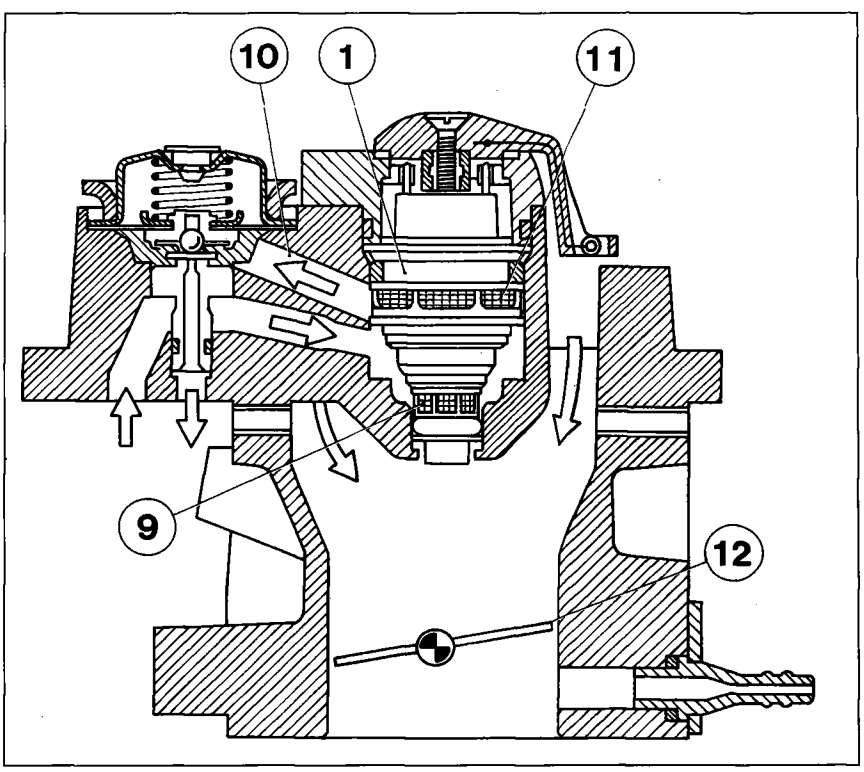

P4F31AJ02

The positive for the injector supply is supplied by the same terminal as the relay which supplies the fuel pump; the circuit closes to earth in the control unit by means of terminal 21.

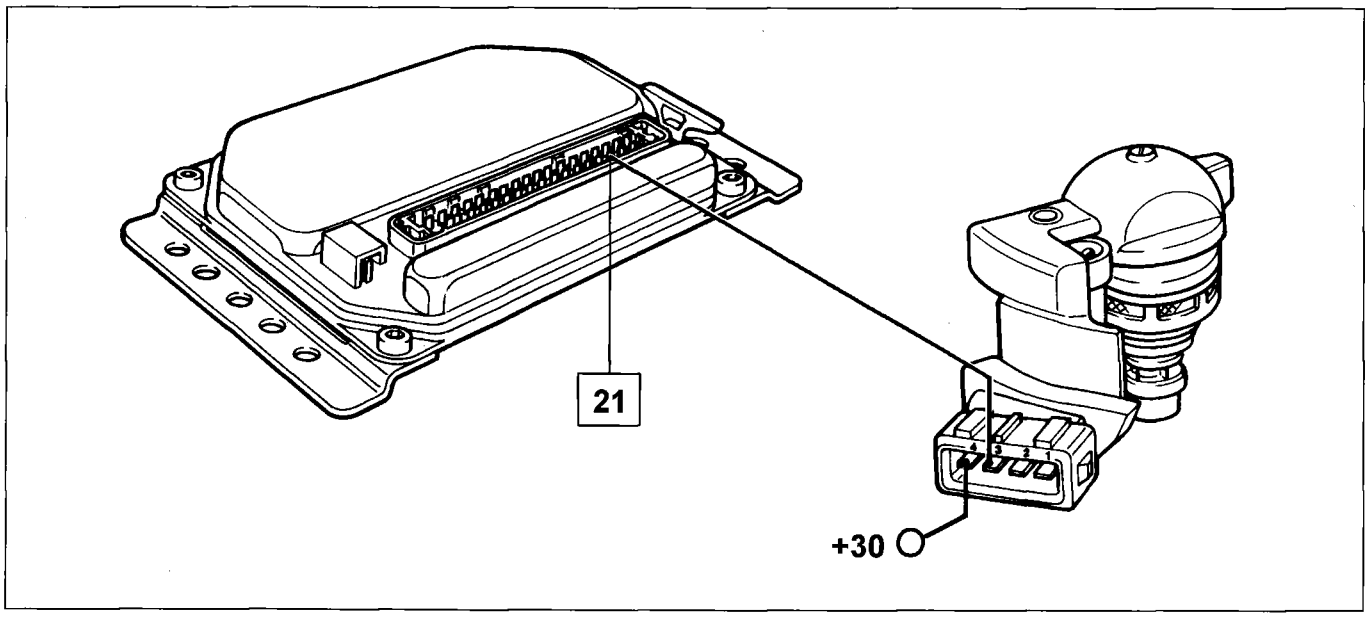

P4F32AJ01

Fuel pressure regulator

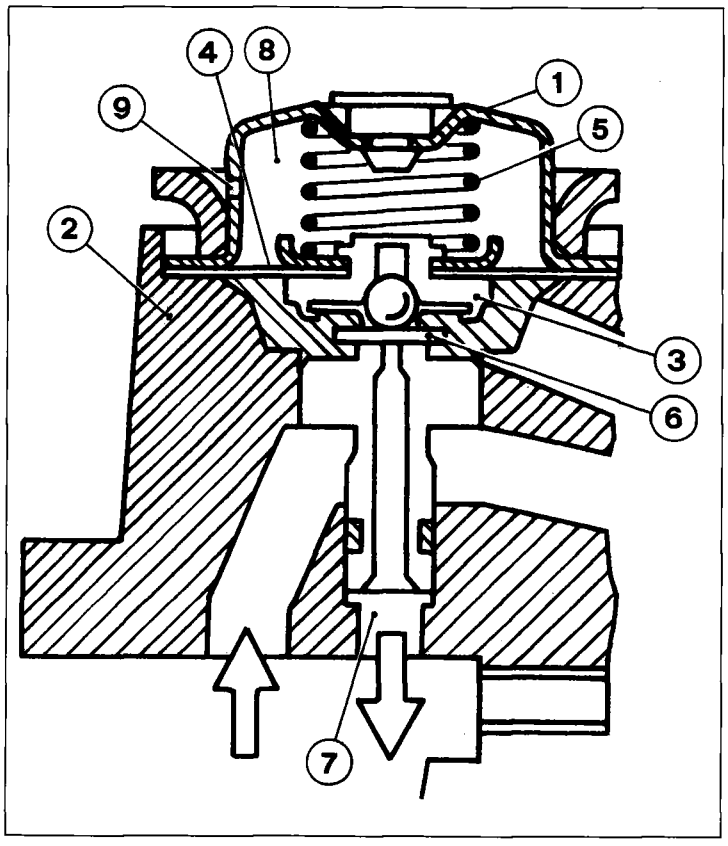

P4F32AJ02

The mechanical diaphragm type regulator (1) is fitted on the injector holder turret (2).

The function of the pressure regulator is to keep the pressure at which the fuel is sent to the injector constant at around 1 bar.

The fuel under pressure coming from the electric pump reaches the hydraulic chamber (3) of the pressure regulator.

If the pressure at the diaphragm (4) exceeds a value of 1 bar, it overcomes the opposing spring (5) loading and moves the plate (6) allowing the fuel to flow through the duct (7) into the tank.

There is a port (9) in the upper chamber (8) of the regulator which places the chamber (8) in contact with the outside, so that a vacuum is not created in the actual chamber.

When the engine is switched off the supply of fuel also ends; the one-way valve for the electric pump and the injector close; in this way the supply pressure in the hydraulic section is maintained for a certain length of time.

This operation prevents the formation of vapour bubbles after the fuel has warmed up due to the heat given off by the engine thereby always guaranteeing that the engine can be started up without problems.

Intake air temperature sensor

The temperature of the intake air is measured by the temperature sensor (B) on the butterfly casing.

This sensor is made up of a plastic casing on which the reaction element (1), made up of an N.T.C. resistance, which varies in a manner which is inversely proportional to the temperature, is fitted.

If the temperature is between 15° C and 30° C, the resistance is 3.3 - 1.5 kΩ whilst if the temperature is around 80°C, the resistance is 0.280 - 0.360 Ω.

The electronic control unit (A) supplies the sensor (B) through terminal 13; the circuit closes to earth from terminal 2 of the sensor to terminal 27 of the control unit.

With the sensor disconnected, the control unit supplies a voltag of 5 V . With the sensor connected, the supply voltage varies according to the temperature (sensor internal resistance).

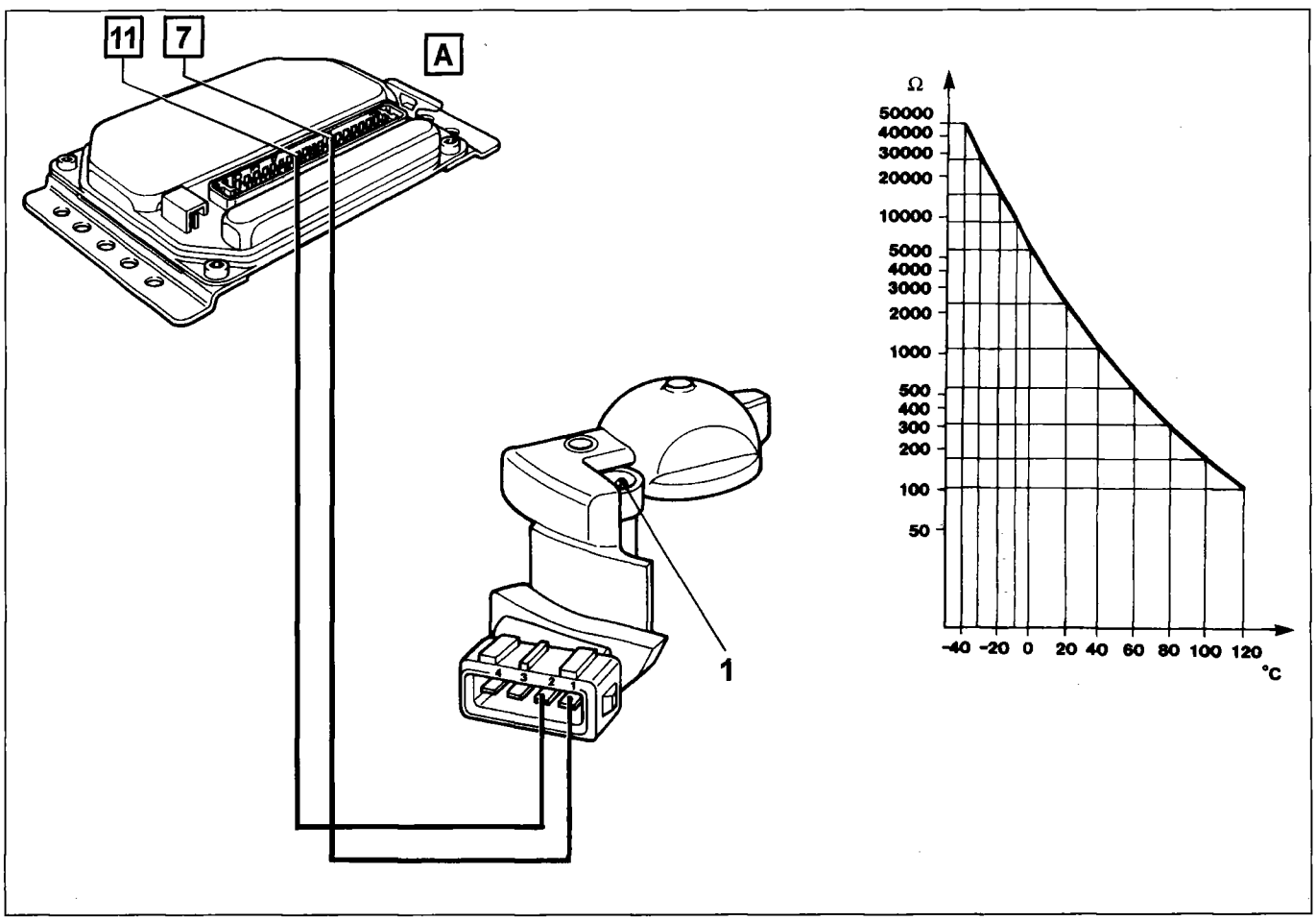

P4F33AJ01

Recovery

With the air temperature sensor short circuited(c.c.) or with an open circuit (c.a.), the control unit receives signals which are not plausible, i.e.:

- sensor c.c.: air temperature > 128° C
- sensor c.a.: air temperature < -50° C

In these cases, the control unit implements the Recovery strategy which takes an air temperature equal to 20° C as a reference.

COOLANT TEMPERATURE SENSOR (0.280.130.026)

The coolant temperature sensor (B) is made up of an N.T.C. variable resistance; it is fitted on the thermostat casing and its operation is similar to the intake air temperature sensor.

The electronic control unit supplies the sensor (B), via terminal **8**, the circuit closes to earth from the sensor terminal to terminal 11 of the control unit.

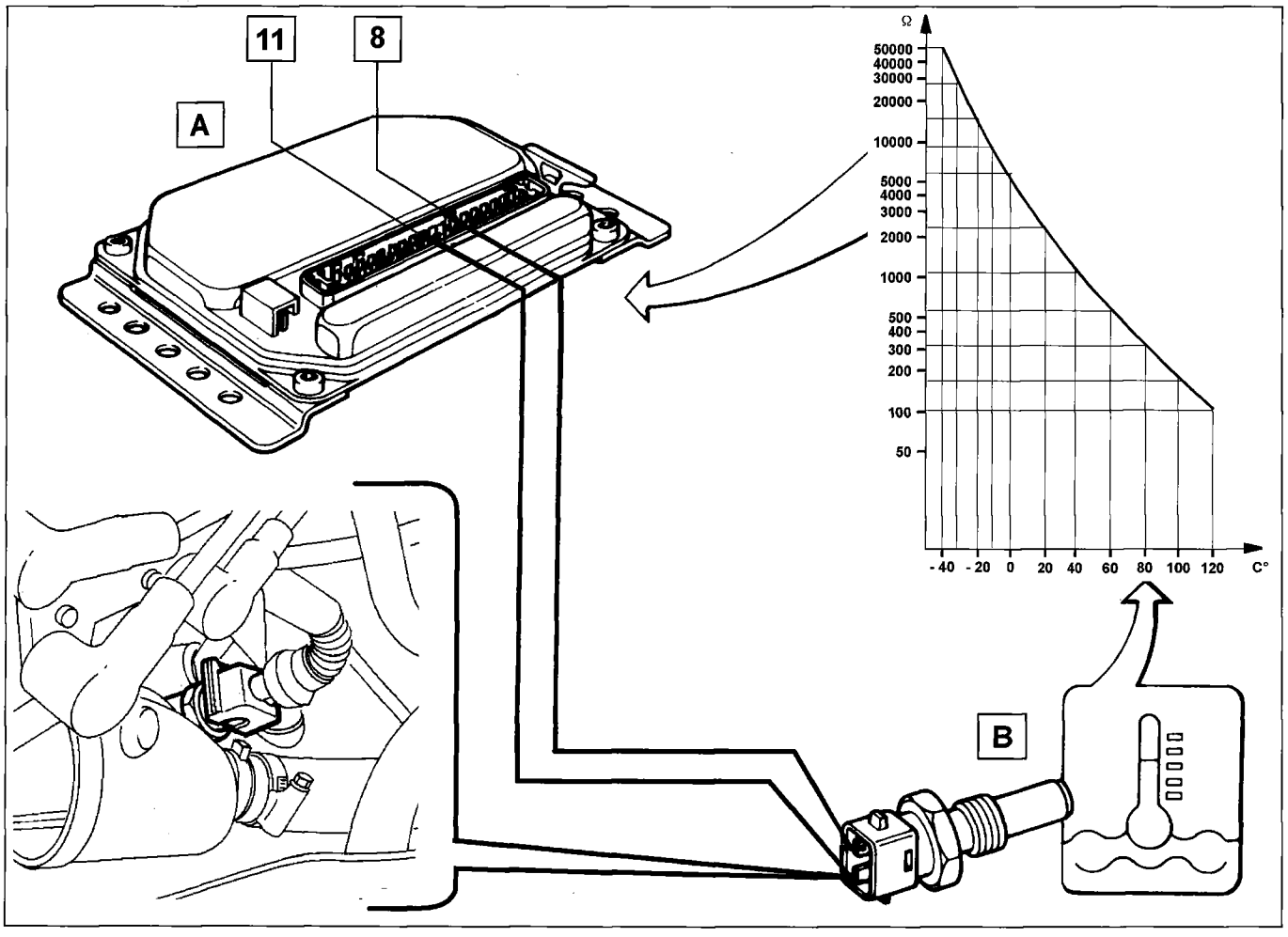

P4F34AJ01

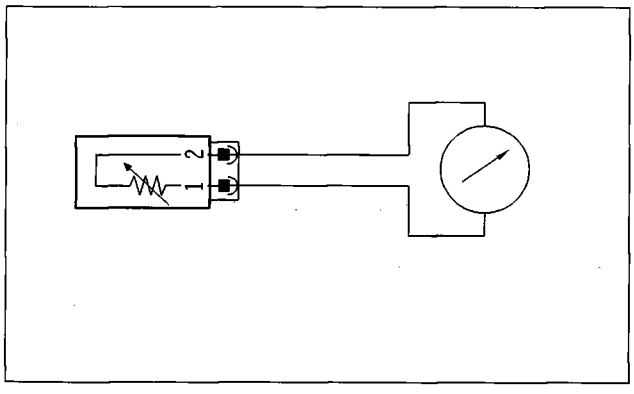

P4F34AJ02

Checking the resistance
The graph shows the typical progress for the sensor which can be measured by disconnecting the connector and connecting an ohmmeter to the sensor.

Removing-refitting
Disconnect the electrical connection and remove the sensor.

Tightening torque 2.4 daNm.

Recovery

- with the coolant temperature sensor disconnected, short circuited (c.c.) or with an open circuit (c.a.), the signals arriving at the control unit are not plausible, i.e.:
- c.c.: coolant temperature > 96.5 °C
- c.a.: coolant temperature < 96.5 °C
- false contact: when the difference between two consecutive temperature readings is large displaying a downwards trend.
- implausible signal: if the signal from the sensor does not vary with the coolant temperature < +60° C and the engine running.

If the control unit detects one or more of the above signals it implements the RECOVERY strategy:

- with the air temperature < 24° C, the control unit considers the coolant temperature to be the same as the air temperature for about 4 minutes, after which it assumes a coolant temperature equal to 100° C;
- with the air temperature ⩾ 24° C, the control unit considers the coolant temperature to be 100° C.

ELECTRIC FUEL PUMP (0.580.453.514)

The electric fuel pump, immersed in the tank, is the two stage turbo pump and is integrated with the fuel level gauge.
The pump is designed to operate, with a supply of 12 V, at a nominal pressure of 1.1 ± 0.1 bar providing a capacity of 100 litres/hour.
The advantages of low pressure turbo pumps compared with high pressure pressure pumps (2.5 bar) are that they are smaller, weigh less and are quieter.

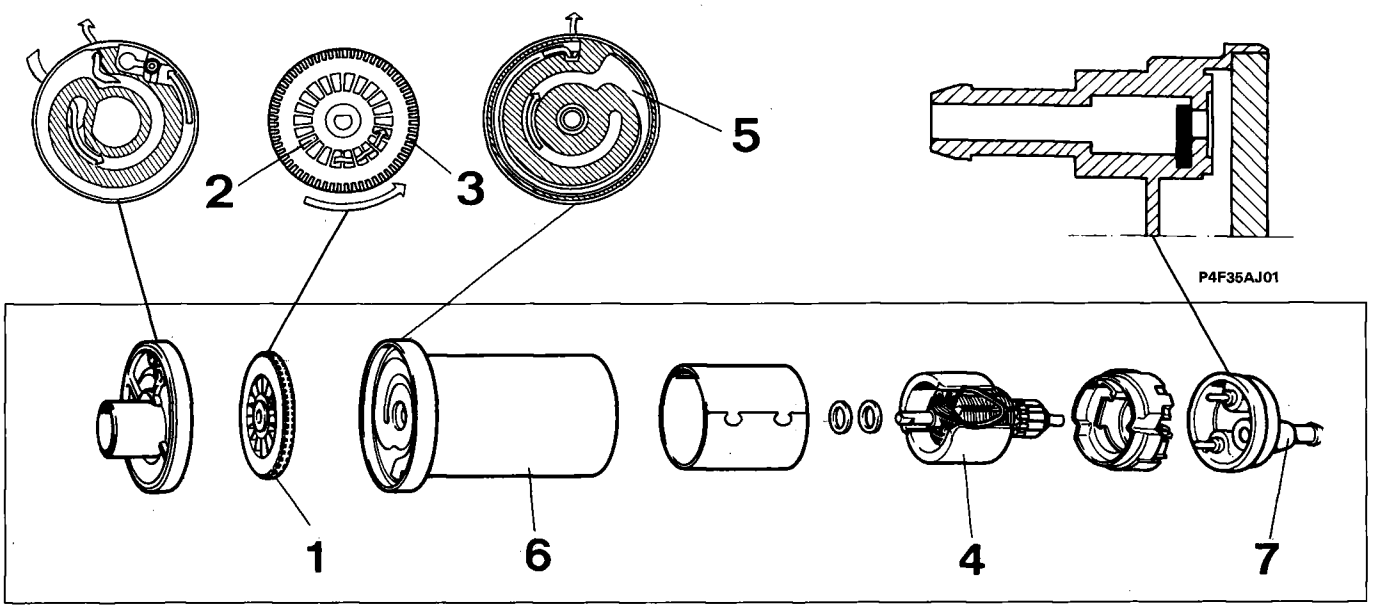

P4F35AJ02

The electric pump contains an impeller (1) which causes two sets of vanes to rotate: one internal (2) with a side profile and one external (3) with a peripheral profile.
With the rotation of the inductor in the rotor (4), the fuel is drawn intothe first side profile stage then, it flows into the second peripheral stage, by mteans of a duct in the inlet disc (5), where it acquires further speed and is sent, through the supply casing (6) and the anti-reflux valve (7), to the injector holder turret.
It is supplied by the control unit via the relay and 10 A fuse.

NOTE *For the positioning and the removing-refitting procedure, refer to the fuel supply section for the 1581 16V version.*

FUEL FILTER (A.450.024.262)

The fuel filter is fitted under the floor panel, on the fuel supply pipe. For the positioning and the removing-refitting procedure, refer to the fuel supply section for the 1581 16V version.

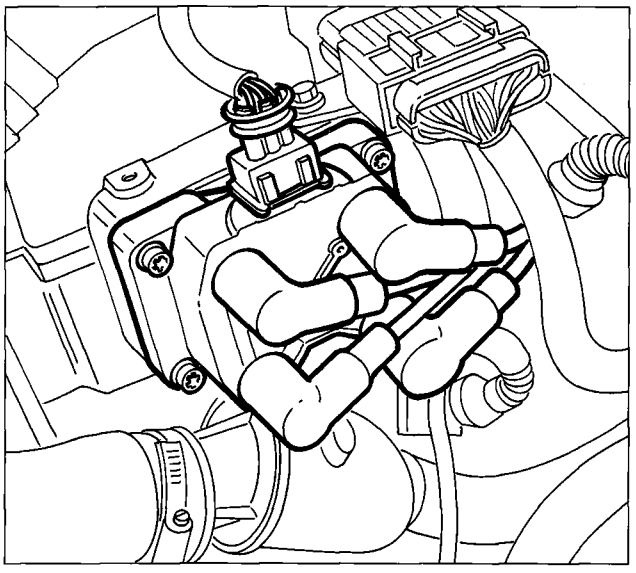

P4F36AJ01

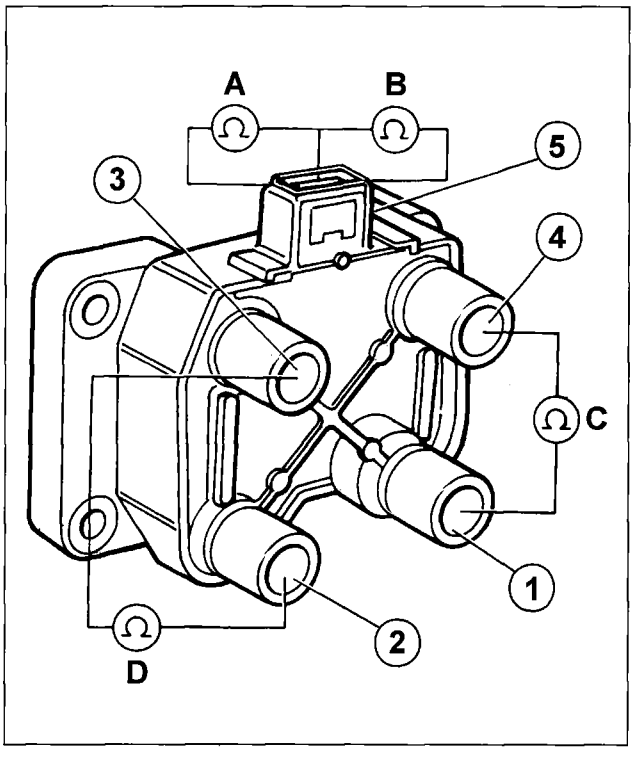

P4F36AJ02

Connector wiring

NOTE *The numbers indicate the corresponding control unit pins.*

IGNITION COIL (0.221.503.407)

The coil, which is the closed magnetic circuit type, is fixed on the left hand side of the cylinder head cover.

1. H.T. socket for cylinder 1 spark plug
2. H.T. sockect for cylinder 2 spark plug
3. H.T. sockect for cylinder 3 spark plug
4. H.T. socket for cylinder 4 spark plug
5. Control unit connection L.T. socket

Checking winding resistance

Primary circuit (A cylinders 2-3, B cylinders 1-4)

Place the probes of an ohmmeter in contact with the positive terminal (centre pin) and the negative terminal (pin 1 for circuit A and pin 2 for circuit B).

The resistance value for the primary circuit read on the instrument should be between 0.45 and 0.55 ohm at 23 °C.

Secondary circuit (C cylinders 1-4, D cylinders 2-3)

Place the probes of an ohmmeter between the two high tension outlet terminals.

The resistance value for the secondary circuit read on the instrument should be between 12000 and 14600 ohm at 23 °C.

Removing-refitting

Disconnect the H.T. and L.T. connections, then undo the fixing bolts and remove the coil.

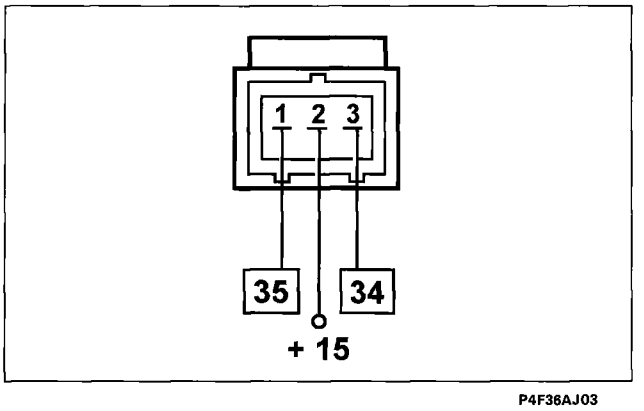

P4F36AJ03

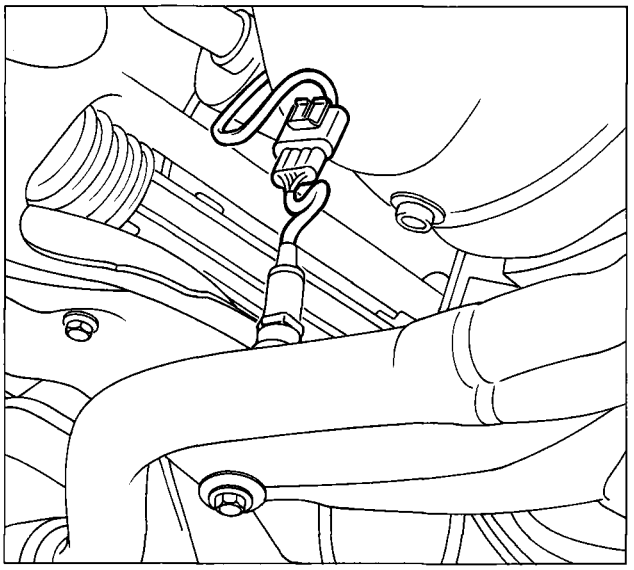

P4F37AJ01

LAMBDA SENSOR (0.258.003.805)

The vehicle is equiped with a heated Lambda sensor with four wires which measures the oxygen content of the exhaust gases. For a full description of the Lambda sensor, refer tothe Fuel System section forthe 1581 16V version.

The sensor can be rapidly put out of action by the presence of even small amounts of lead in the fuel.

Removing-refitting

- Position the vehicle on a lift.
- Disconnect the neg. lead from the battery.
- Raise the vehicle
- Disconnect the electrical connection
- Remove the Lambda sensor from its housing.
- When tightening, do not exert force on the component or else it will be irreparably damaged.

If the Lambda sensor is being replaced, when refitting apply anti--seizing graphite grease to the threaded part (for example Bosch VS 14016- FT).

Tightening torque 5 - 6 daNm

Wiring connector

The numbers indicate the corresponding control unit pins.

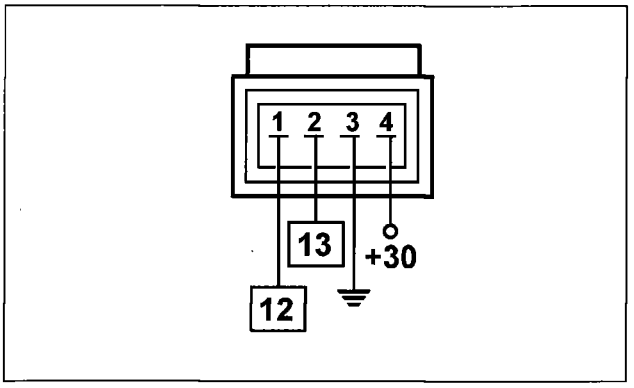

P4F37AJ02

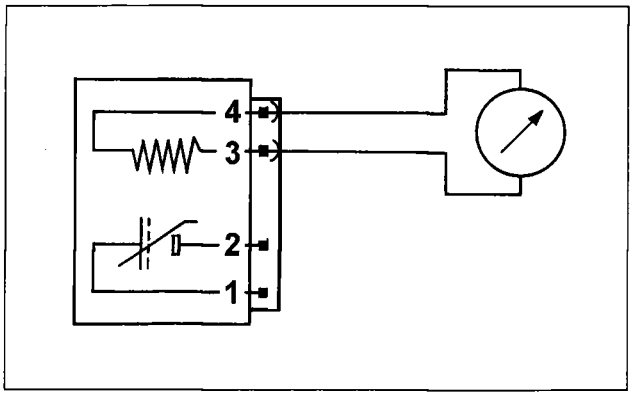

P4F37AJ03

Checking the resistance

The resistance of the sensor heater can be measured by disconnecting the connector and connecting an ohmmeter as shown in the diagram.

Resistance: 4.5 ± 0.5 ohm at 20 °C

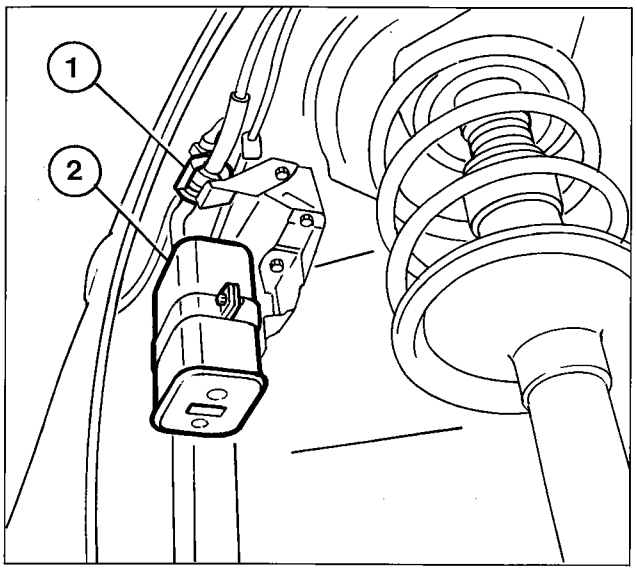

P4F38AJ01

CHARCOAL FILTER AND FUEL VAPOUR CUT OUT SOLENOID VALVE

The charcoal filter and the solenoid valve are located inthe right wheel arch.

For the description of the charcoal filter, refer to the Fuel System section for the 1581 16V version.

For the description of the fuel vapour cut out solenoid valve and the removing-refitting procedures for both the filter and the cut out solenoid valve, refer to the Fuel System section forthe 1998 20V version.

1. Vapour cut out solenoid valve
2. Charcoal filter

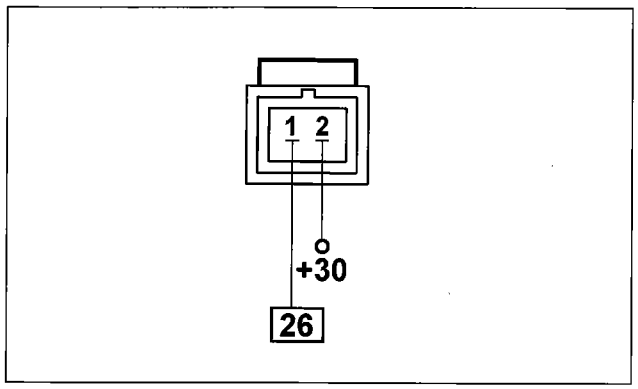

P4F38AJ02

Vapour cut out solenoid valve (0.280.142.300)

Wiring connector

NOTE *The numbers indicate the corresponding control unit pins.*

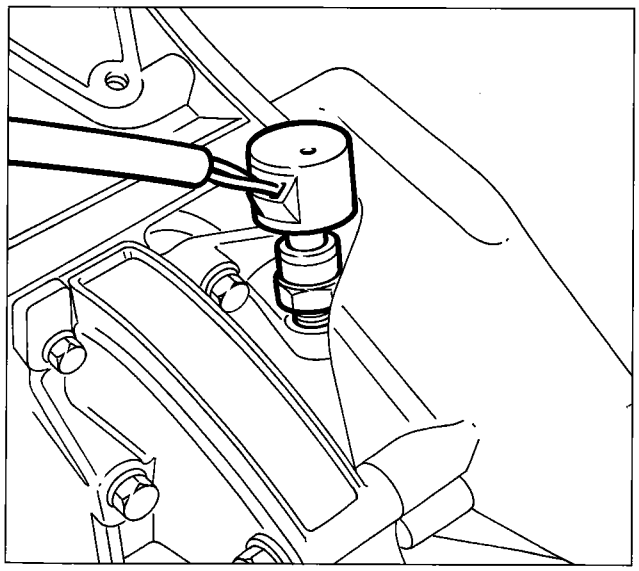

P4F38AJ03

SPEEDOMETER SENSOR

The speedometer sensor (vehicle speed sensor) is made up of a Hall effect sensor which is located at the differential outlet.
The sensor sends the control unit a signal whose frequency varies according to the speed of the vehicle.
The control unit uses this information to improve the management of the engine idle adjustment actuator.

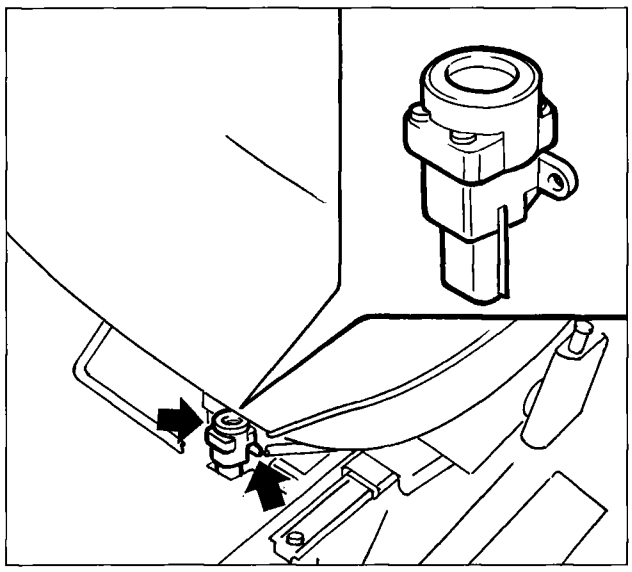

P4F39AJ01

INERTIA SWITCH

In order to increase the degree of safety for the occupants of the vehicle in the case of an impact, the vehicle is fitted with an interia switch located inside the passenger compartment, under the driver's seat.

This sensor reduces the risk of fire (as a result of fuel escaping from the injection system), de-activating the electric pump which supplies the injection circuit.

For the full description and the removing-refitting procedure, refer to the Fuel System section for the 1581 16V engine.

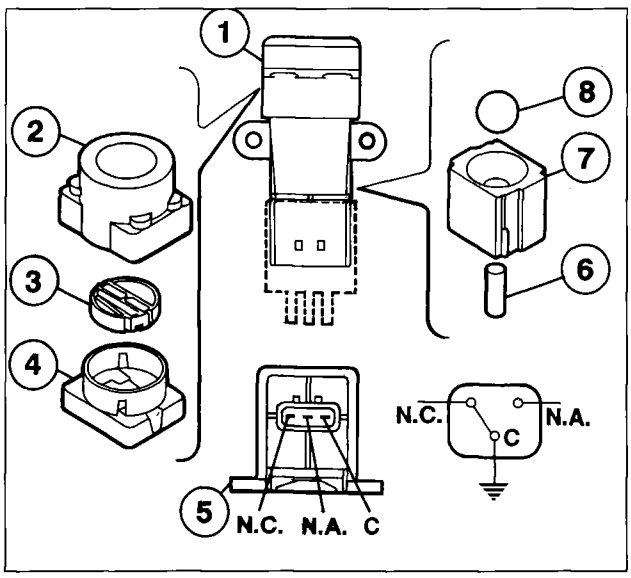

P4F39AJ02

Inertia switch components

1. Complete inertia switch
2. Outer casing
3. Push button
4. Upper side
5. Engagement side
6. Permanent magnet
7. Housing for permanent magnet
8. Steel ball

C = Common terminal
N.C. Normally closed
N.A. Normally open

Even after an apparently slight impact, if there is a smell of fuel or leaks are noticed from the fuel system, do not turn the switch back on, but search for the fault and repair it in order to avoid the risk of fire.

MULTI-PURPOSE VALVE AND SAFETY AND VENTILATION VALVE

These valves belong to the anti-evaporation and fuel vapour recirculation system. For a description of them, refer to the Fuel System section for the 1581 16V version.

CHECKS, ADJUSTMENTS AND REPAIR OPERATIONS FOR THE BOSCH MONOMOTRONIC SYSTEM

THE FOLLOWING PRECAUTIONS SHOULD BE OBSERVED WHEN WORKING ON A VEHICLE EQUIPPED WITH A MONOMOTRONIC INJECTION/IGNITION SYSTEM:

- *do not start up the engine with the electrical connector terminals not properly connected or slack at the battery poles;*
- *do not use a rapid battery charger to start up the engine;*
- *never disconnect the battery with the engine running;*
- *in order to charge the battery, disconnect it first from the electrical system;*
- *if the vehicle is going in a drying oven after painting, at temperatures above 80 °C, the electronic control unit should be remove first;*
- *do not attach or disconnect the multiple connector for the electronic control unit with the ignition switch in the ON position;*
- *always disconnect the battery negative before carrying out electrical welding on the vehicle.*
- *Remember that this system has a memory which is always supplied (stand-by memory) where the self-adjustment values are memorized. The operation of disconnecting the battery involves the loss of this information which can be obtained once again after a certain distance, therefore this operation should be limited as far as possible.*

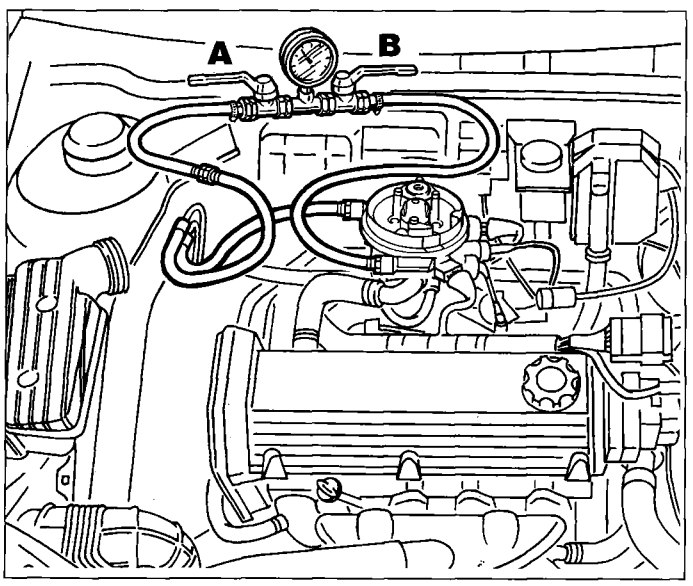

P4F40AJ01

CHECKS FOR THE FUEL SUPPLY CIRCUIT

1st Test

Check the **fuel supply pressure** in the following way:

- Disconnect the pipe arriving at the injector holder turret (coming from the fuel filter) from the inlet duct;
- Place pressure gauge 189589000, with both taps A and B in the open position, between the end of the disconnected pipeand the injector holder turret inlet duct;
- Operate the electric pump with the engine switched off;

This last operation is carried out with the help of the Fiat/Lancia Tester by activating the "fuel pump" test.

The pressure reading on the gauge should stabilize, in those test conditions, at 1.1 ± 0.1 bar.

If the pressure is too low, carry out the next test.

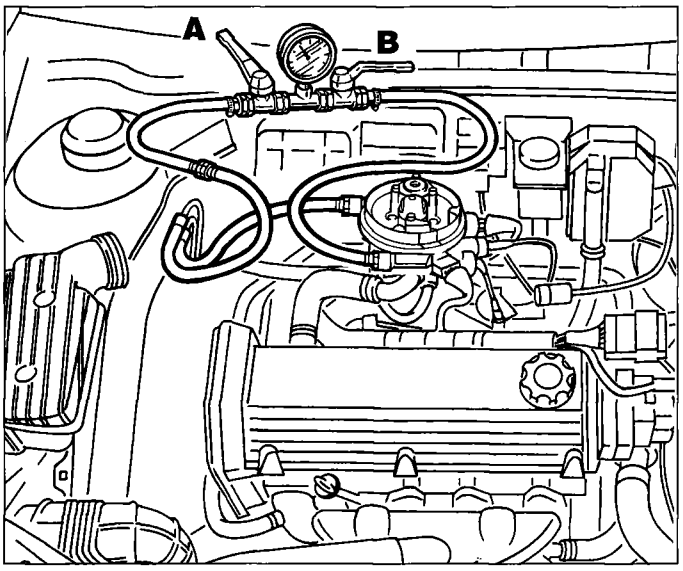

P4F41AJ01

2nd Test

Checking maximum fuel supply pressure (or electric pump efficiency)

The same connections as for the previous test apply

- close the fuel tap control lever A;
- operate the electric pump with the engine switched off, as described on the previous page: the pressure should not exceed 5 bar (pump safety valve setting). If this is not the case, replace the electric pump because it is defective.

If the pressure reading in the 1st test (see previous page) was more than 1.1 ± 0.1 bar, it is necessary to:

- disconnect the fuel return pipe from the pressure regulator and replace it, temporarily, with a pipe going to a suitable container to collect the fuel
- operate the electric pump, with the engine idling, then read the pressure on the gauge:

a) if it reachess 1.1 ± 0.1 bar, the fuel return pipe to the tank should be replaced because it is obstructed or bent
b) if it exceeds 1.1 ± 0.1 bar, then the regulator is defective and the injector holder turret should be replaced

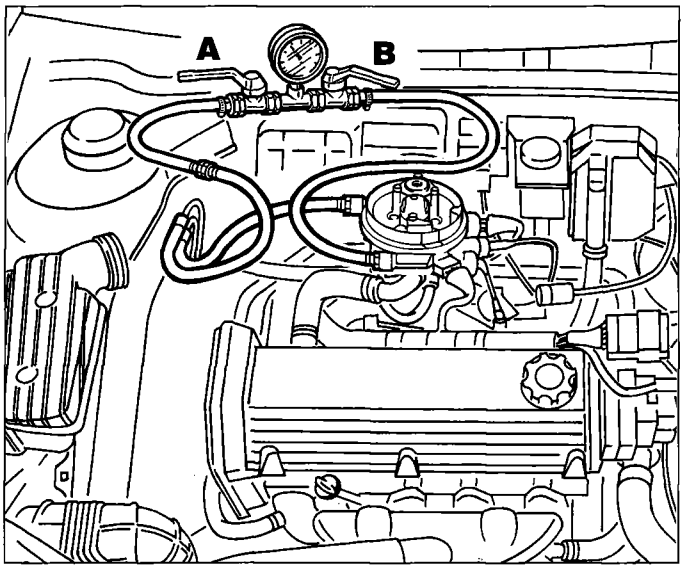

P4F41AJ02

3rd Test

Injector leakage test

In order to check whether the injector is dripping, simply apply the connection for the 1st test (checking regulation pressure), then operate the electric pump with the engine switched off. When the regulation pressure is reached, close the fuel tap control lever B; in this way the pressure of the fuel and that in the injector is the same.

Then:

- switch off the electric pump
- observe whether as soon as the pressure stabilizes (i.e. decreases slightly) it remains constant for around 60 secs
- after having supplied the electric pump with the engine switched off visually inspect whether the injector or any connections are dripping.

Replace any injector which is dripping and/or renew the defective seal from where there is a leak.

Copyright by Fiat Auto

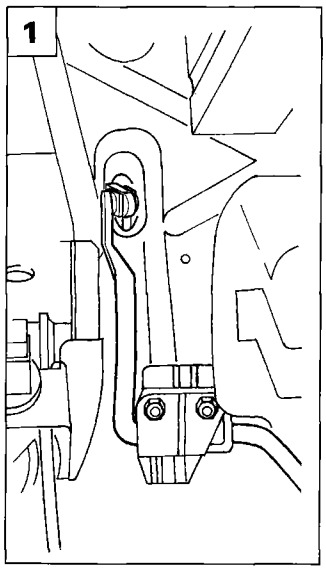

P4F49CJ01

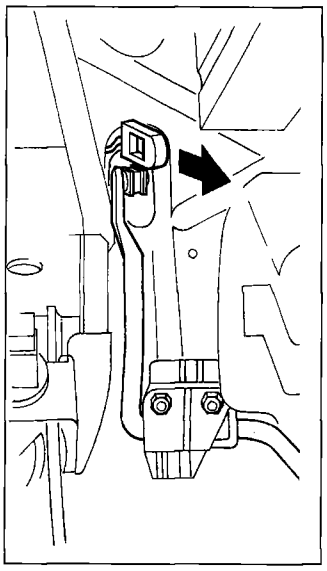

P4F49CJ02

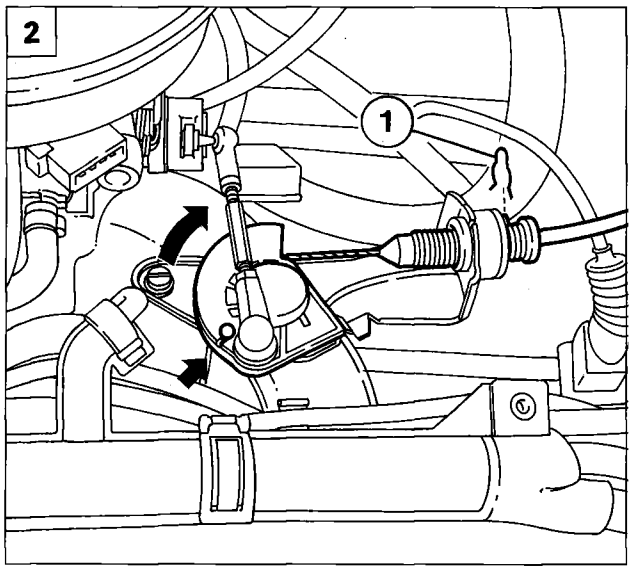

P4F42AJ03

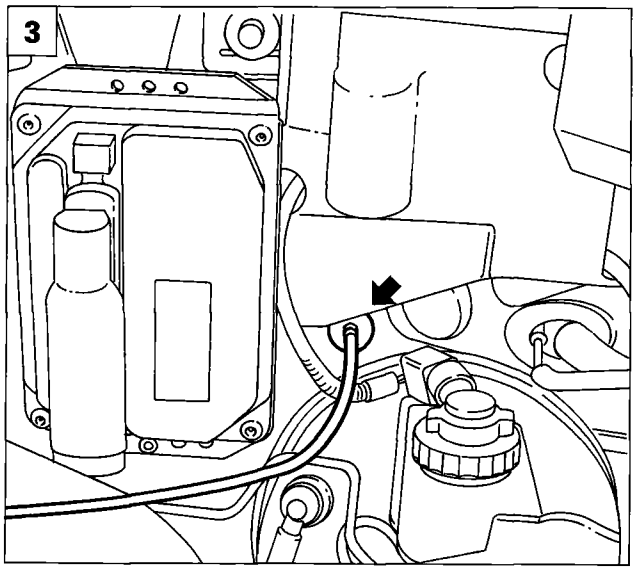

P4F42AJ02

REMOVING-REFITTING ACCELERATOR CABLE

Disconnect the cable from the battery, then proceed as described below:

1. Working from inside the vehicle, disconnect the cable from the mounting on the accelerator pedal.
2. Rotate the butterfly valve control lever, in the engine compartment, and release the accelerator cable. Extract the spring (1), then removethe cable from the mounting bracket.
3. Remove the flexible buffer from the anchorage opening in the dashboard partition and extract the complete accelerator cable.

When refitting, adjust the accelerator cable as described in the paragraph "Adjusting the accelerator cable".

REMOVING-REFITTING ACCELERATOR PEDAL

For the procedure for removing-refitting the accelerator pedal, refer to the Fuel System section for the 1581 16V version.

REMOVING-REFITTING FUEL TANK

For the procedure for removing-refitting the fuel tank, refer to the Fuel System section for the 1581 16V version.

ADJUSTING BUTTERFLY VALVE OPENING

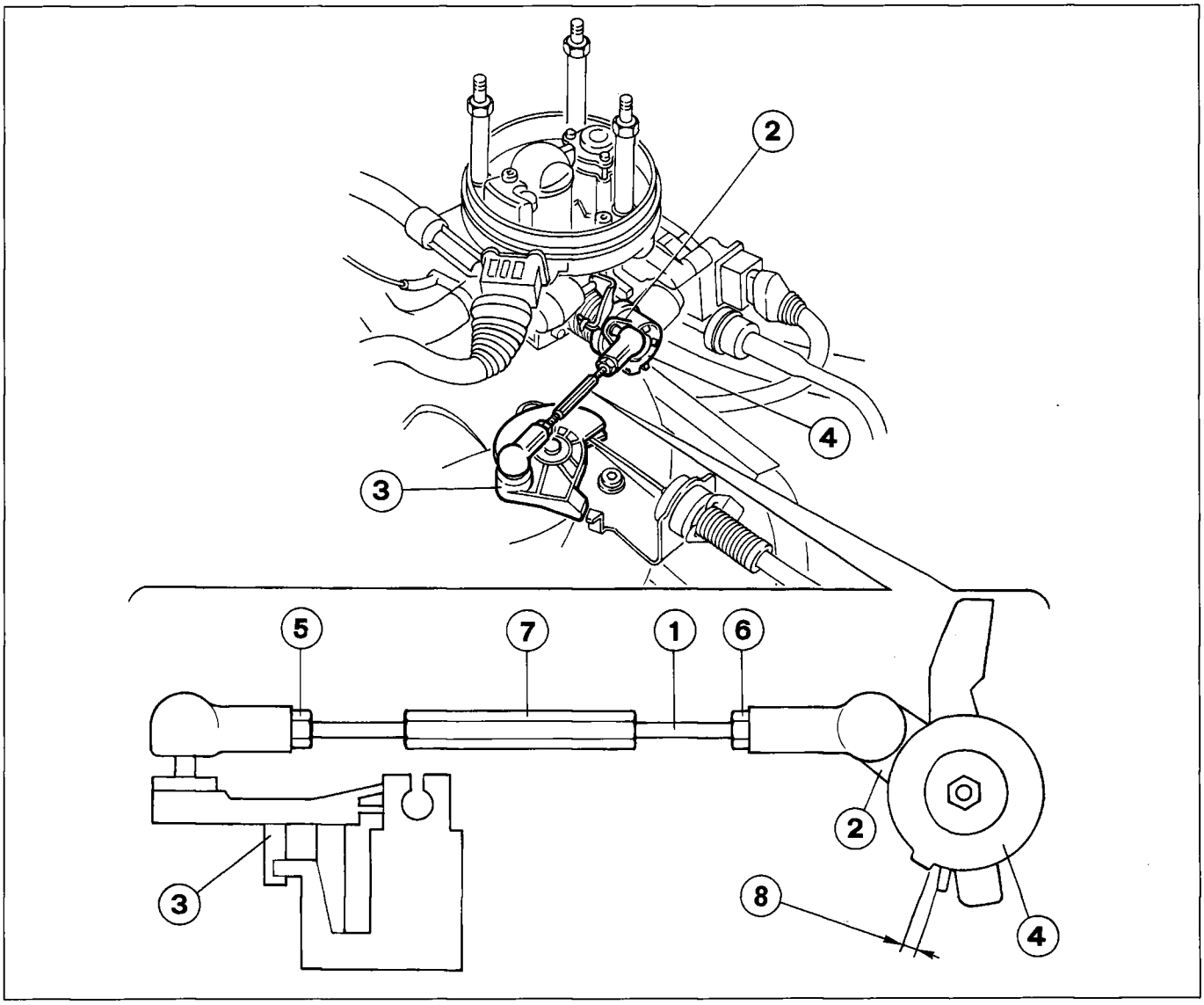

P4F43AJ01

For the smooth operation of the Monomotronic injection system it is vital for the butterfly opening linkage to be correctly adjusted.
Check that with the rod (1) disconnected from the lever, the pulley (3) is in the end of travel position. **In this condition the accelerator cable should be neither too taut nor too slack so that there is no free play for the accelerator pedal.** If this is not the case, act on the accelerator cable spring.
With the rod (1) disconnected from the lever (2), let the engine warm up (the radiator cooling fan should switch on and off).
Make sure that all the vehicle electrical consumers (including the two radiator and climate control cooling fans) are switched off and then switch off the engine.
Connect the rod (1) to the lever (2) and check that the clearance (8) between the two levers (2 and 4) is as follows:
- for new engines 1.6 - 1.8 mm
- for engines which have been run in 0.7 - 0.9 mm

If the above measurement does not correspond to the figure given, loosen the nuts (5 and 6) and tighten/loosen the rod (1) adjuster (7).
When the adjustment is complete make sure that with the accelerator pedal fully depressed, the butterfly is completely open.

Copyright by Fiat Auto

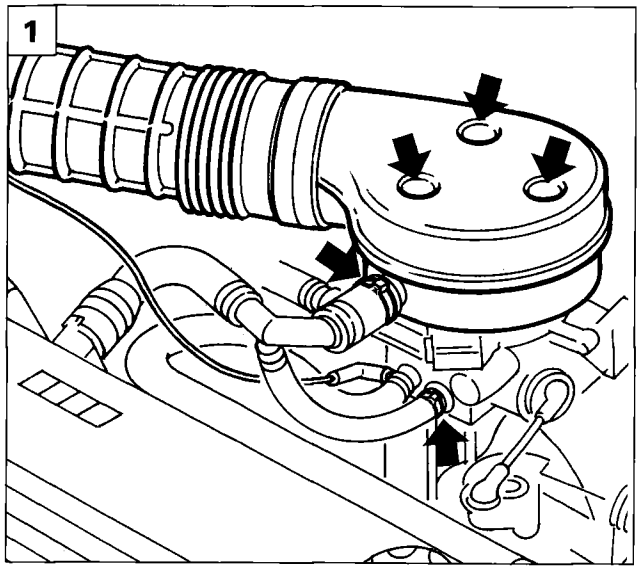

P4F44AJ01

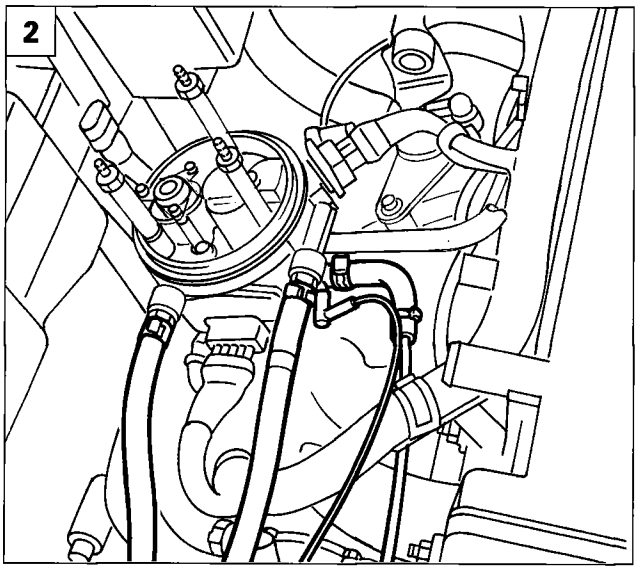

P4F44AJ02

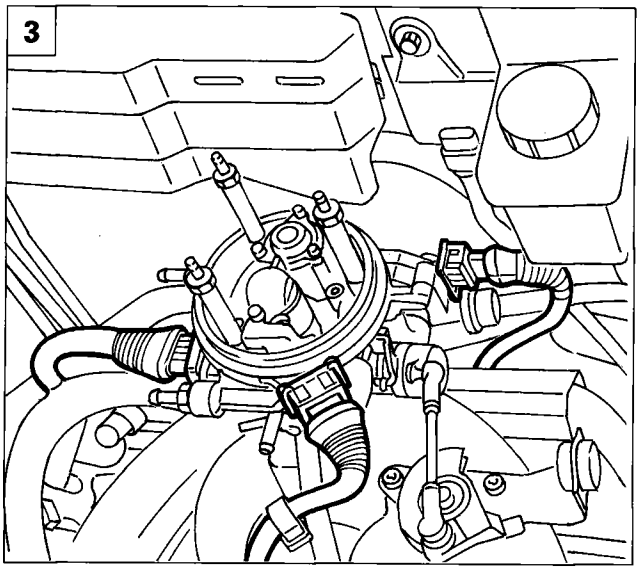

P4F44AJ03

REMOVING-REFITTING BUTTERFLY CASING

1. Remove the air duct and the gas recirculation pipes coming from the engine crankcase (blow-by) by acting at the points shown.
2. Disconnect the fuel pipes, the anti-evaporation pipe and the vacuum duct.
3. Disconnect the electrical connections

4-5 Release the accelerator control rod, undo the bolts shown and remove the butterfly casing.

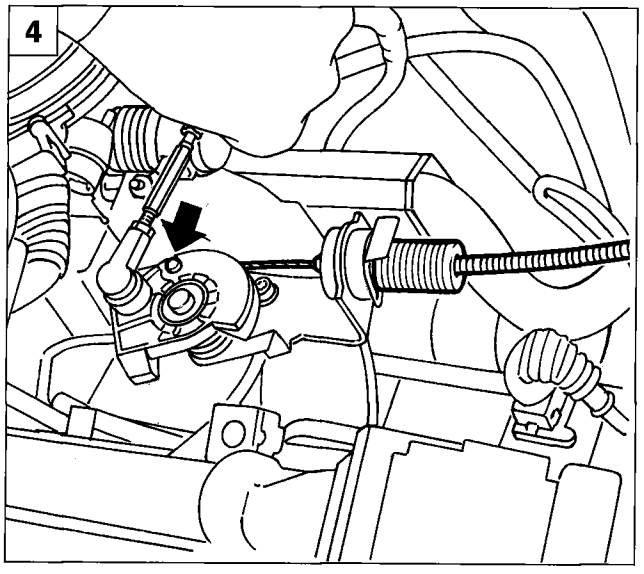

P4F44AJ04

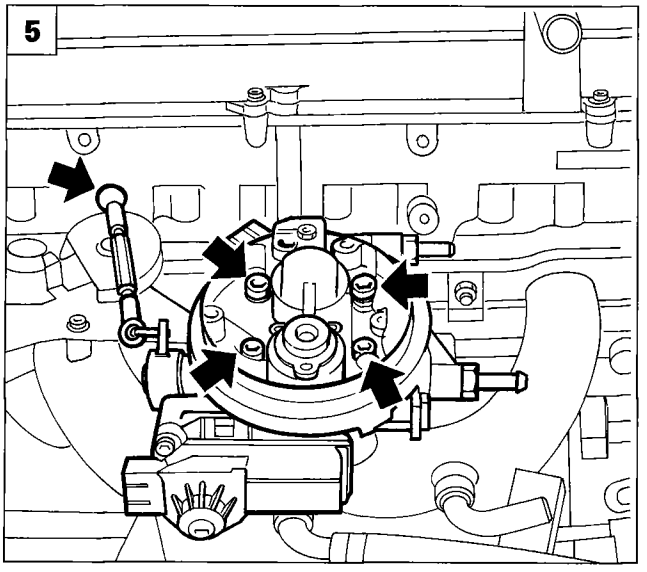

P4F44AJ05

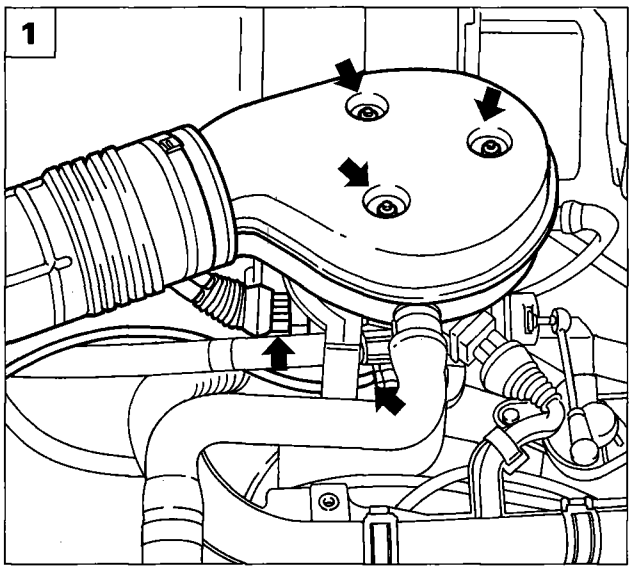

P4F45AJ01

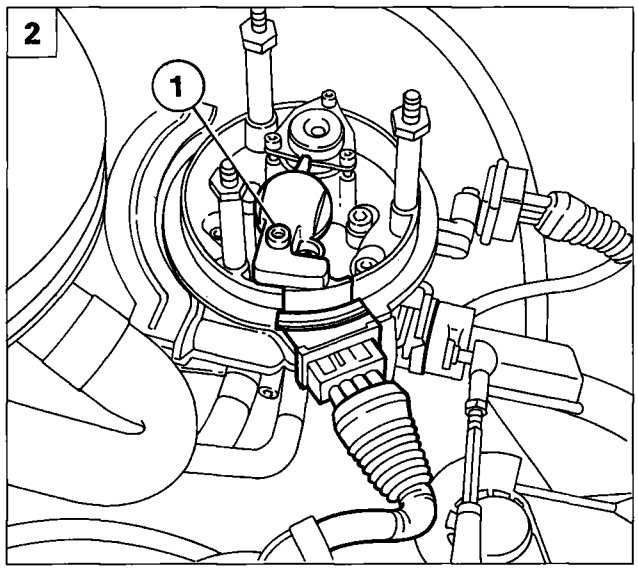

P4F45AJ02

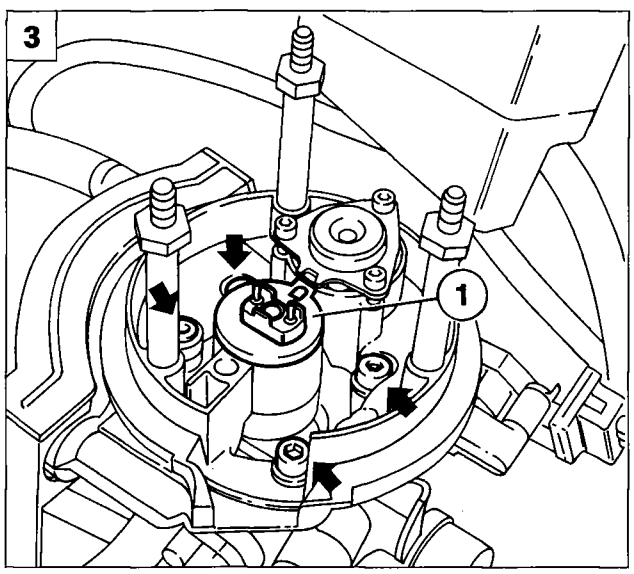

P4F45AJ03

REMOVING-REFITTING AIR TEMPERATURE SENSOR AND INJECTOR

1. Remove the air duct, the electrical connection for the butterfly valve position sensor and the vacuum duct acting at the points shown.
2. Disconnect the electrical connection, undo the bolt (1) and remove the air temperature sensor.
3. Remove the seal (1) from the injector and undo the bolts shown.
4. Using a screwdriver for leverage, separate the upper section of the butterfly casing.
5. Using a spanner (or suitable equivalent tool), carefully push on the outside edge of the injector and extract it from its seat.

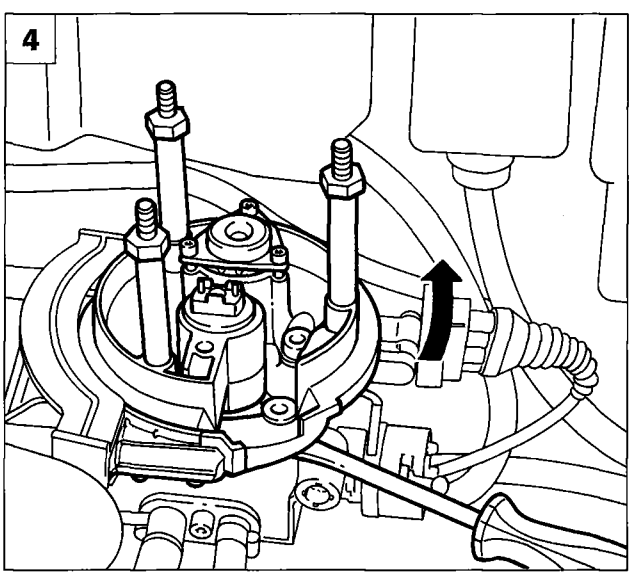

P4F45AJ04

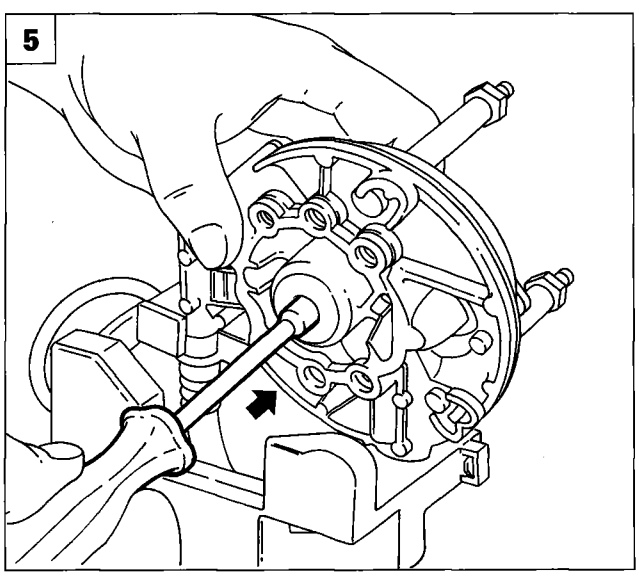

P4F45AJ05

CHECKING ENGINE IDLE SPEED

If the engine idle speed is not 850 ± 50 rpm and the injection/ignition control unit is the self-adjusting type, then it is not possible to adjust it and it is necessary to check that the accelerator control linkage is correctly adjust and the problem should be sought by carrying out a full fault diagnosis using the Fiat/Lancia Tester.

CHECKING CONCENTRATION OF POLLUTANT EMISSIONS

By automatically adjusting the system, the Monomotronic system ensures a constant check of the idle speed and the CO percentage thereby rendering any external adjustment operation superfluous (there are no adjustment screws). However, a check on the content of the exhaust gases, downstream of the catalyzer, can provide precious information on the operating conditions of the injection/ignition system, the engine parameters and the catalyzer.

Checking idle concentration of CO and HC upstream of the catalytic silencer

In order to check the concentration of carbon monoxide (CO) and unburnt hydrocarbons (HC) upstream of the catalyzer, proceed as follows:

1. Undo the cap or the nut on the exhaust pipe upstream of the catalyzer and tighten the tool in its place.
2. Connect a suitably calibrated CO tester to the tool.
3. Start up the engine and let it reach operating temperature.
4. Check that the idle speed corresponds to the figure recommended.
5. Check that the idle concentration of CO is within the recommended values given in the table overleaf; if this is not the case, it is necessary to check:
   - that the Lambda sensor is working properly, using the Fiat/Lancia Tester;
   - for the presence of air penetration in the area surrounding the Lambda sensor housing;
   - the injection and ignition system (**especially the wear of the spark plugs**).
6. In the same conditions, check that the HC concentrationis less than 600 p.p.m.
7. If these values are not found, check the engine, paying special attention to:
   - the ignition advance angle;
   - the valve clearances;
   - the valve gear timing;
   - the engine compression.

Checking concentration of CO and HC at the exhaust

The concentration of carbon monoxide (CO) and unburnt hydrocarbons (HC) at the exhaust is measured by inserting a suitably calibrated CO tester at least 30 cm into the end of the exhaust pipe as shown in the diagram.

If the shape of the end section of the exhaust pipe is such that the sensor cannot be completely inserted, then a special extension pipe which guarantees the seal in the join area must be added.

1. Check that the idle CO and HC concentrations are those indicated in the table.
2. If the HC value differs from the figures given, whilst the value previously measured upstream of the catalyzer was okay, then the engine parameters are correct and the cause of the problem should be sought in the decreased efficiency of the catalyzer.

Table summarizing pollutant emission tolerance figures

	CO (%)	HC (p.p.m.)	CO_2 (%)
Upstream of the catalyzer	0,4 ÷ 1	600	⩾ 12
Downstream of the catalyzer	⩽ 0,35	⩽ 90	⩾ 13

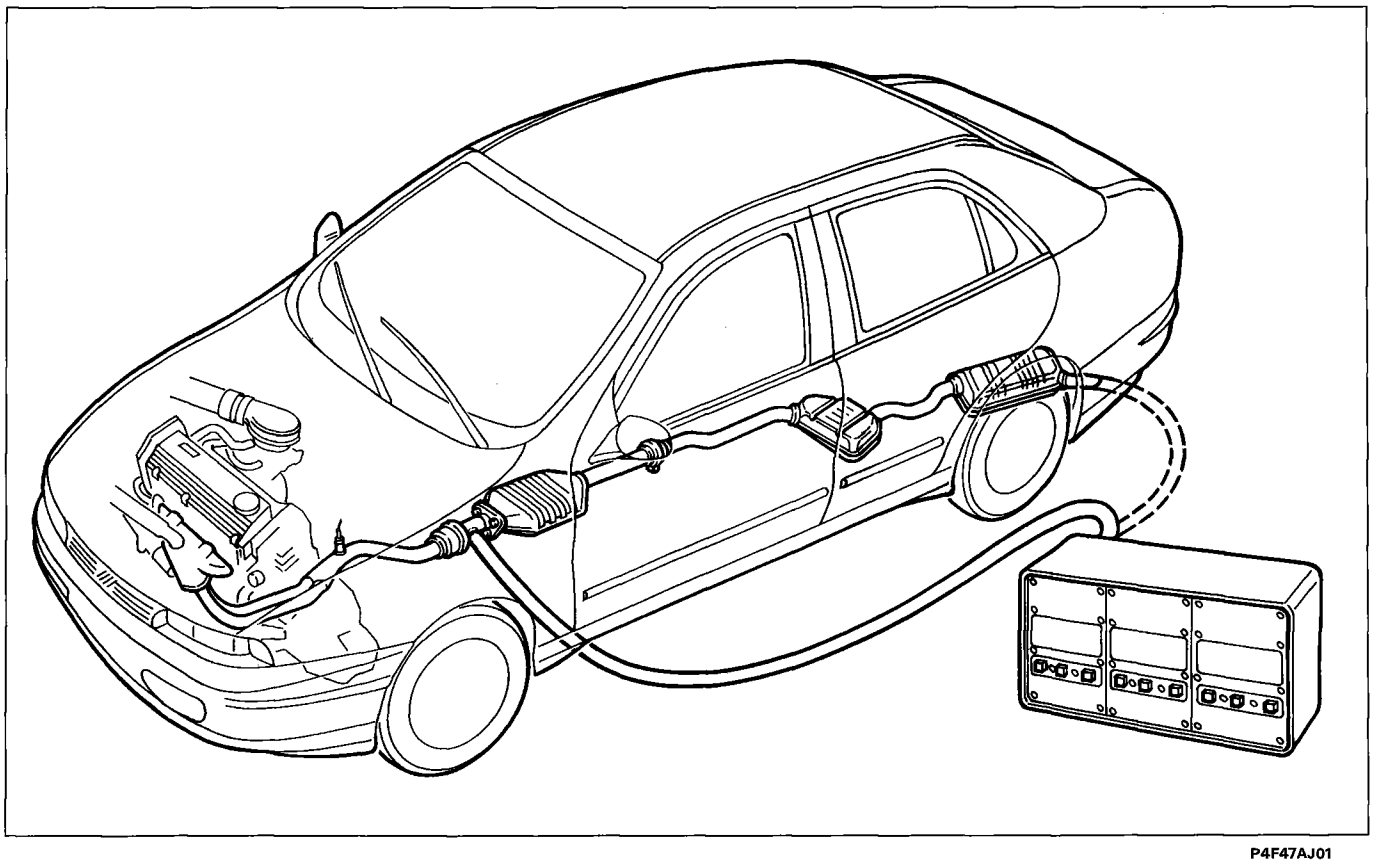

P4F47AJ01

DIAGNOSIS

The complete diagnosis of the system is possible through an active dialogue with the Fiat/Lancia Tester
If a failure is detected at the sensors, then the electronic control unit replaces the information coming from the faulty sensor with one memorized (recovery) to allow the operation of the engine. The detection of a fault involves it being memorized permanently and the sensor excluded from the system until the signal is compatible once again.
The same procedure is applied if the fault involves an actuator. The detecting of the fault and its replacement with recovery data involves the failure being signalled by the special warning light in the instrument panel coming on.
The parameters which can, in the case of a fault, be managed by the control unit are: idle adjustment actuator, coolant temperature sensor, butterfly valve position sensor, air temperature sensor and detonation sensor. On request, the operator can read the faults in the control unit using the Fiat/Lancia Tester.

Detecting faults

This is carried out duringthe basic function through which the sensor/actuator is managed.

Memorizing the error and structure of the errors memory

The errors are memorized in the control unit in the order in which they arrive in the RAMs. The location of each of them is memorized and there is a frequency counter.

Classification of the defect

If a defect is recognized for the first time and the error state persists for the recognition time, then the defect is memorized as "permanent". If this defect later disappears, then it is memorized as "intermittent". If it then reappears, it becomes "permanent" once again.
The classification of a defect as "permanent" activates the recovery functions; when the fault disappears the normal reading or implementation function is restored.
Several types of fault are classified as "important", in terms of the pollution control regulations. The presence of these faults is signalled to the user by the failure warning light in the dashboard coming on.

Frequency counter

Each error is allocated a frequency counter which is used to determine the moement in which a fault no longer present was memorized. The first time the fault is detected, the counter is set at 10. If the fault disappears, it remains memorized as intermittent and the counter is decreased each time the engine is started up without the fault reappearing. If the counter reaches zero, the fault is automatically cancelled from the memory.

If after the counter has been decreased, the fault should reappear, the counter is set at 10 (if, however, it was already greater than 10, then it is not altered).

Signalling a failure

The failure warning light comes on when there is a defect memorized as "present" and "important".

The delay time between detecting the fault and the warning light coming on is 2.5 s.condi; the delay time between the fault disappearing from the memory and the warning light going out is 0 seconds.

The warning light comes on each time the ignition key is turned to the ON position. If there are no "important" faults already present then the warning light goes out after 4 seconds.

Cancelling the error

When the frequency counter reaches 0, the fault and the parameters associated with it are cancelled.

The immediate cancellation of the entire errors memory takes place in the following cases:

- through the "cancel errors memory" command sent by the tester;
- by interrupting the electronic control unit supply (disconnecting the battery or the control unit connector).

Fault diagnosis with the Fiat/Lancia TESTER

The diagnostic socket to which the Fiat/Lancia Tester is connected is located at the side of the electronic control unit.

The exchange of data between the control unit and the Tester takes place via a two direction serial line (line K) using the standard Bosch communication protocol.

The Tester can provide the following information:

- display of the errors;
- display of the engine parameters;
- active diagnosis

List of errors

Rpm sensor	Signal not correct (open circuit) Loss of synchronism (implausible signal)
Butterfly potentiometer	Track 1 defective - Track 2 defective - Synchronism error between the tracks
Air temperature sensor	C.A.-C.C.
Coolant temperature sensor	C.A.-C.C.- False contact - Implausible signal
Lambda sensor	C.A.-C.C.- Limits reached for Lambda integrator and automatic adjustment factor
Idle speed actuator	C.A.-C.C.
Control unit	Control unit memory irregularities are signalled
Detonation sensor	C.A.-C.C.
Fiat CODE	Code not recognized or not received

Copyright by Fiat Auto

Parameters displayed

Engine rpm
Injection time
Intake air temperature
Coolant temperature
Butterfly valve opening angle (angle track 1, angle track 2, normalized angle and ratio between the tracks)
Lambda sensor (state, value of integrator, auto-adjustment factor and sensor voltage signal)
Fiat CODE (state byte)

Active diagnosis

The following tests can be carried out using the Fiat/Lancia Tester:
- Injector
- Fuel vapour cut out solenoid valve
- Rev counter
- Idle speed actuator
- Cancelling errors.

Recovery

In the case of failures at the sensors, the control unit replaces the value transmitted by the sensor with a so-called Recovery value which, according to the different irregularities, is stored in the control unit memory or is specially constructed using other available information, in order to allow the vehicle to reach a service centre.

This value is also transmitted to the Fiat/Lancia Tester, therefore during the fault diagnosis it is a good idea to bear in mind that if there are problems, the Fiat/Lancia Tester signals the error for the sensor involved and the Recovery value appears on the display.

Permanent memory

The control unit is equipped with a «permanent» type memory, i.e. it keeps a record of the error even if the cause no longer exists and the ignition is turned to the OFF position; and a «volatile» type memory (RAM) where the information is lost as soon as the cause of the error disappears.

This also makes it possible to identify occasional errors more effectively.

Before ending the fault diagnosis, the contents of the «permanent» memory should be cancelled using the Fiat/Lancia Tester in Active diagnosis.

If this is not the case, when the Fiat/Lancia Tester is reconnected, the errors already examined will be signalled.

Disconnecting the control unit from the system, even for very long periods, does not cancel the contents of the «permanent» memory.

page

INTEGRATED INJECTION-IGNITION SYSTEM M. MARELLI- WEBER I.A.W.-1AF 1

- Introduction 1

SYSTEM OPERATING STRATEGIES 1

Injection-ignition system operating diagram 2

- Signal management 3
- Injection management 4
- Fiat CODE ignition lock function management) 9
- Ignition management 10
- Engine idle control 13
- Fuel vapour recirculation management 13
- Test management 13
- Heating/ventilation system management 14

Diagram showing input and output between injection-Ignition system sensors/actuators 15
Air intake circuit management 16
Fuel supply circuit diagram 17
Fuel evaporation control circuit diagram 18
Blow-by gas recirculation diagram 19
Injection ignition system wiring diagram 20
Engine exhaust assembly diagram 22
Location of injection-ignition system components 23

INJECTION-IGNITION SYSTEM FUSES AND RELAYS 24

EARTH POINTS 24

COMPONENTS OF INJECTION-IGNITION SYSTEM 25

- Injection-ignition system wiring 25
- Injection-ignition ECU 25
- Rpm and TDC sensor 29
- Timing sensor 31
- Butterfly valve case 32
- Throttle position sensor 33
- Intake air temperature sensor 35
- Engine idle speed actuator 36
- Absolute pressure sensor 38
- Coolant temperature sensor 39
- Electric fuel pump 40
- Fuel filter 42
- Fuel manifold 43
- Fuel pressure regulator 44
- Carbon filter and fuel vapour cut-off valve 44
- Multifunction valve 46
- Vehicle speed sensor 47
- Safety and ventilation valve 47
- Injectors 48
- Inertia safety switch 49
- Ignition coils 50
- Dual relay 52
- Lambda probe 54
- Removing-refitting lambda probe 56

CHECKS, ADJUSTMENTS AND REPAIRS TO IAW INJECTION/IGNITION SYSTEM 57

- Adjusting throttle cable 57
- Removing-refitting fuel manifold and injectors 57
- Removing-refitting fuel tank 59
- Checking fuel supply circuit 62
- Removing-refitting accelerator cable 64
- Removing-refitting accelerator pedal 65
- Checking engine idle speed 66
- Checking levels of polluting emissions 66

FAULT DIAGNOSIS 67

- System self-diagnosis 67
- Diagnosis using a Fiat/Lancia Tester 67
- Displayed parameters 68
- List of errors 68
- Active diagnosis 69
- Recovery 69
- Permanent memory 69

Copyright Fiat Auto

M.MARELLI-WEBER I.A.W.-1AF.13 INTEGRATED INJECTION-IGNITION SYSTEM

Introduction

The I.A.W.-1AF system fitted to the 1581 i.e. 16v engine belongs to the category of digital electronic ignition systems with static advance and timing, integrated with a phased, multipoint, intermittent electronic fuel injection system.

The system may be identified by the following codes according to the version:

- I.A.W. - 1AF.15 for the version with manual gearbox
- I.A.W. - 1AF.25 for the version with automatic transmission

This system therefore adopts a single ECU, single wiring system and a set of sensors common to both systems.
Its function is therefore to inject an exact quantity of fuel into the engine intake duct upstream of the intake valves in order to obtain the correct mixture concentration.

The I.A.W.-1AF.13 system ensures efficient operation and optimisation of performance and fuel consumption. Harmful emission levels are reduced through real time response to the various engine operating conditions.

The system may be divided schematically into the following subsystems:

- Electric/electronic circuit
- Air intake circuit
- Fuel feed circuit
- Emission control devices

The system is able to monitor the following parameters by means of dedicated sensors:

1. instantaneous engine rpm;
2. position of each piston pair in relation to TDC of cylinder 1;
3. intake air temperature;
4. throttle valve angular position;
5. coolant temperature;
6. actual mixture concentration (by means of lambda probe signal);
7. intake manifold pressure;
8. vehicle speed;
9. battery voltage;
10. air conditioner compressor activation (if fitted).

This data, generally analogue, is converted into digital signals by analogue/digital (A/D) converters so that it may be used by the ECU.
Note that this I.A.W.-IAF injection-ignition sytem does not require adjustment because it is self-adjusting and self-adaptive.

SYSTEM OPERATING STRATEGIES

The management software resident in the ECU memory comprises a set of strategies. Each of these controls a specific system control function.
Each strategy uses the various inputs listed above to process a set of parameters, using data maps saved in specific areas of the ECU. The resulting data output is used to control system actuators, in other words the devices used to operate the engine, namely:

1. injectors;
2. ignition coils;
3. solenoids of various types;
4. electric fuel pump;
5. engine idle speed actuator;
6. control relays.

Copyright by Fiat Auto

INJECTION-IGNITION SYSTEM OPERATING DIAGRAM

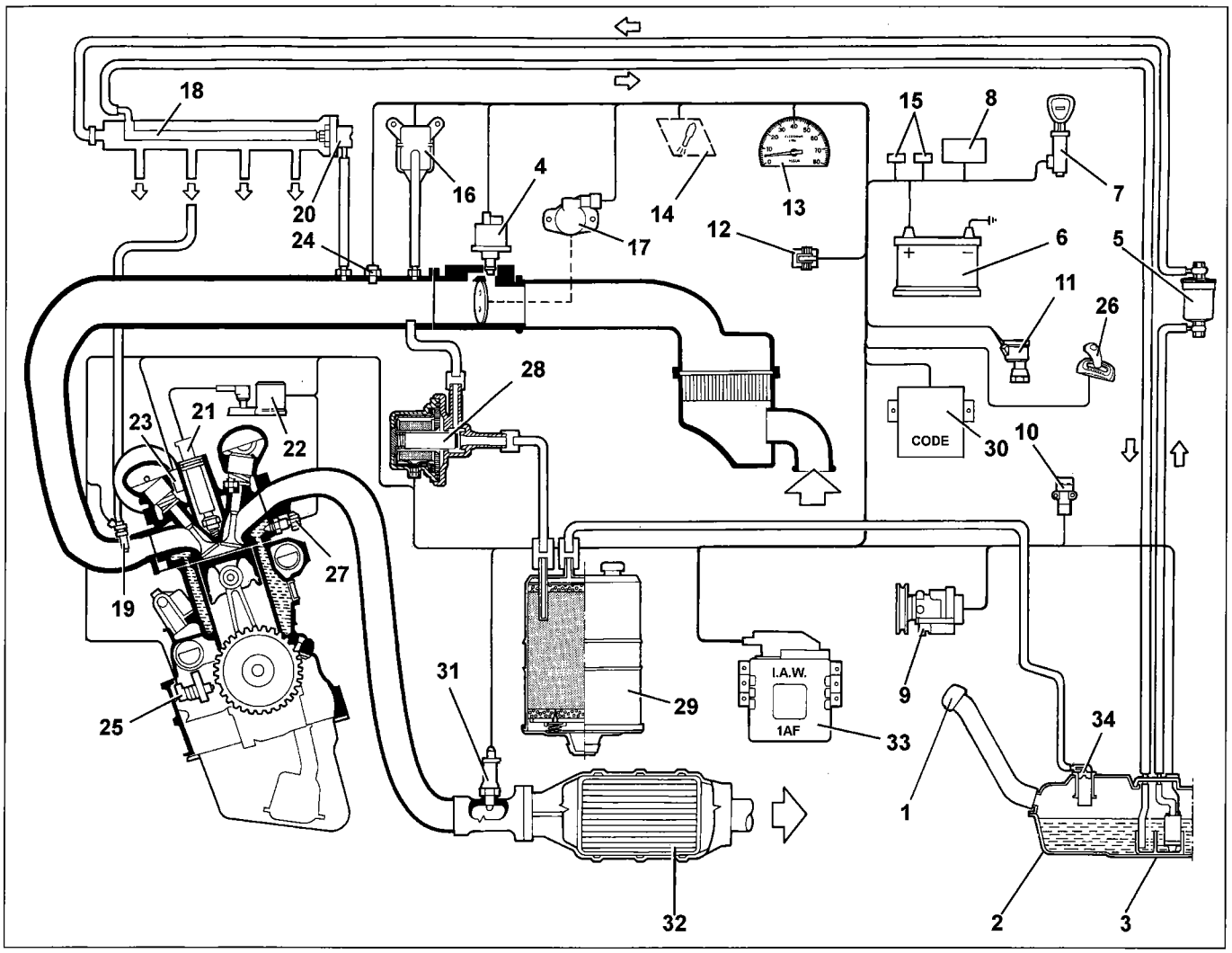

P4F02BJ01

1. Safety and ventilation valve
2. Fuel tank
3. Electric fuel pump
4. Engine idle speed actuator
5. Fuel filter
6. Battery
7. Ignition switch
8. Dual relay
9. Air conditioner system
10. Inertia switch
11. Vehicle speed sensor
12. Diagnostic socket
13. Rev counter
14. System warning light
15. Injection-ignition system fuses
16. Absolute pressure sensor
17. Throttle valve position sensor
18. Fuel supply manifold
19. Injectors
20. Fuel pressure regulator
21. Spark plugs
22. Ignition coils
23. Timing sensor
24. Intake air temperature sensor
25. Rpm and TDC sensor.
26. Automatic transmission
27. Coolant temperature sensor
28. Fuel vapour cut-off solenoid
29. Active carbon trap filter
30. FIAT CODE control unit
31. Lambda probe
32. Catalytic converter
33. Electronic injection-ignition control unit
34. Multifunction valve

The management strategies control ignition advance and fuel delivery as efficiently as possible in order to ensure mixture concentration is always correct as engine load and environmental conditions change.

System management strategies are essentially as follows:
-signal management;
-injection management;
-Fiat CODE ignition lock function management;
-ignition management;
-engine idle control;
-fuel vapour recirculation management;
-test management
-heating/ventilation system management

SIGNAL MANAGEMENT

Upon starting, when the rpm sensor detects the first space due to two missing teeth on the phonic wheel (gap), the ECU identifies injection and ignition timing, because these parameters are essential to ensure subsequent successful implementation of all strategies.

Timing is identified by interpreting a series of signals from an rpm sensor located on the crankshaft pulley and a timing sensor located on the camshaft pulley, intake side.

NOTE The term "signal framework" denotes the set of signals produced by a sensor on the crankshaft and a sensor on the camshaft. Because these are located in specific reciprocal positions, they provide the ECU with a synchronised sequence of signals that the ECU is able to identify.

The signal framework is produced as follows:

- phonic wheel on the crankshaft pulley, equipped with (60-2) 58 teeth and an angular gap of 18° (equivalent to two missing teeth) for TDC recognition.
- wheel on camshaft pulley, intake side, comprises two long slots and one short slot, with width and arrangement designed to provide the signal indicated in the figure.

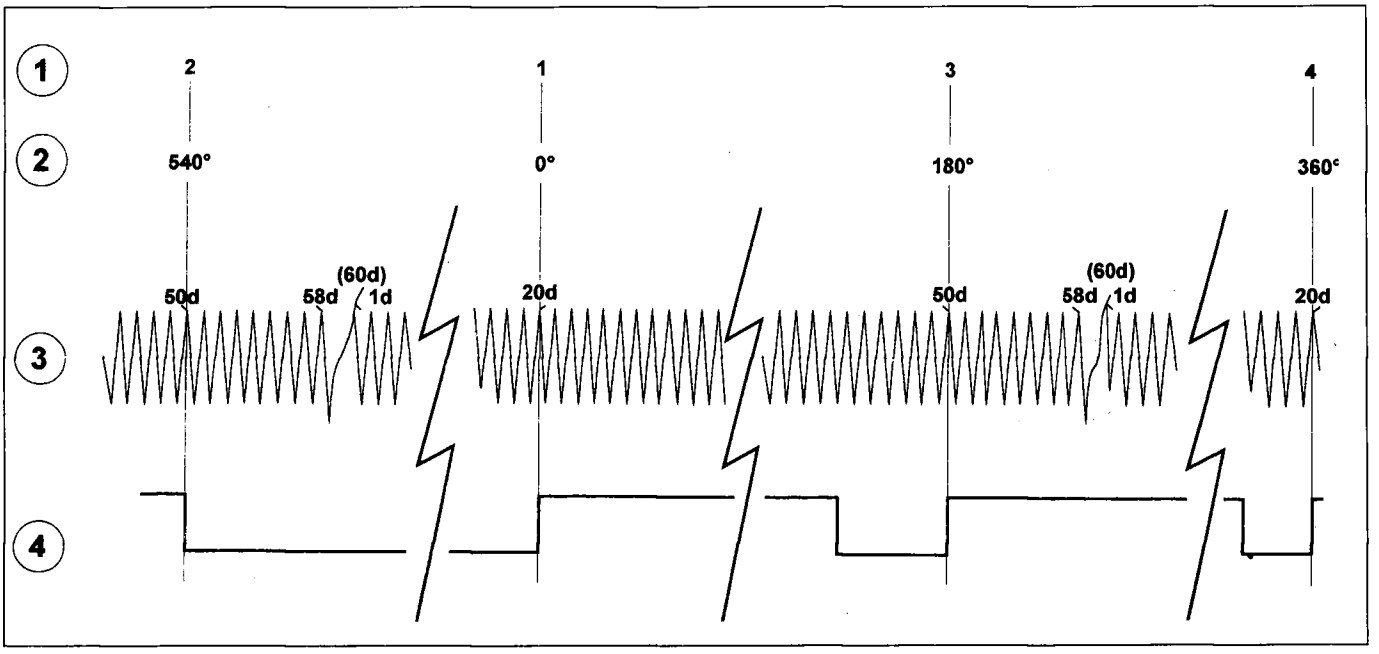

P4F03BJ01

1. Cylinder TDC
2. Crankshaft angles
3. Crankshaft phonic wheel signal (rpm sensor)
4. Camshaft wheel signal (engine timing sensor)

INJECTION MANAGEMENT

The ignition management strategies are designed to provide the engine with the correct amount of fuel at the right time in accordance with engine service conditions.

The injection-ignition system uses an indirect measurement system known as «SPEED DENSITY - LAMBDA», i.e. angular speed of rotation, intake air density, retro-active concentration check.

In practice this system uses ENGINE SPEED (revs per minute) and AIR DENSITY (pressure and temperature) to measure the amount of air taken in by the engine.

The amount of air taken in by each cylinder upon each engine stroke depends on intake air density and also on standard displacement and volumetric efficiency.

Air density is taken to be the density of air taken in by the engine and calculated as a function of absolute pressure and temperature - both measured in the inlet manifold.

Volumetric efficiency is a parameter relating to the cylinder filling coefficient. It is calculated on the basis of experimental tests carried out on the engine throughout its service range and then memorized in the ECU.

Once the amount of air taken in has been established, the system must provide sufficient fuel to make up the required fuel mixture concentration.

The injection trigger pulse or time at which fuel delivery begins is mapped in a control unit and alters according to engine speed and intake manifold pressure. In practice, the the ECU performs calculations in order to control sequential, phased opening of the four injectors, one per cylinder for the length of time strictly necessary to form an air-fuel mixture as close as possible to a stoichiometric ratio.

Fuel is injected directly into the manifold close to the intake valves at a differential pressure of some 3 bar.

Speed (no. of revolutions per minute) and air density (pressure and temperature) are used to measure intake air quantity, which is used in turn to calculate the amount of fuel needed to achieve the required mixture proportions. The other sensors in the system (coolant temperature, throttle valve position, battery voltage, etc.) allow the ECU to correct the baseline strategy for each specific engine service condition.

This specification is fitted with a catalytic converter to abate polluting emissions. In order to keep this working efficiently, the air-fuel ratio must be maintained at near stoichiometric levels.

A stoichiometric ratio is achieved by using a hot lambda probe. This probe continually monitors the amount of oxygen in the exhaust gas and then informs the ECU. This unit in turn uses mapped data to correct the fuel air mixture on-line if proportions are no longer stoichiometric.

Idle speed, exhaust gas CO level and butterfly valve sensor position are not adjusted on this system.

Control of mixture concentration (retro-active control)

NOTE *Mixture ratio is defined and indicated by the Greek letter α (alpha) as follows:*

$$\alpha = \frac{\textbf{quantity of air taken in by engine}}{\textbf{quantity of fuel injected}}$$

Stoichiometric ratio is defined and indicated by the symbol αst as follows:

$$\alpha st = \frac{\textbf{theoretical quantity of air required to burn all the fuel injected}}{\textbf{quantity of fuel injected}}$$

Mixture concentration is defined and indicated by the Greek letterλ (lambda) as the ratio:

$$\lambda = \frac{\textbf{quantity of air taken in by engine}}{\textbf{theoretical quantity of air required to burn all the fuel injected}}$$

Thus we easily find that $\alpha/\alpha st=\lambda$.

Stoichiometric ratio depends on fuel type. For unleaded fuels in current use, this figure is 14.7 - 14.8, which corresponds to lambda = 1. (a ratio of 14.8:1 means that 14.8 parts of air are required to burn 1 part of fuel).

The mixture is termed rich (or heavy) when the quantity if air is less than the stoichiometric level. In this case, lambda equals $\leq$ 1;

the mixture is termed lean (or light) when the quantity of air exceeds the stoichiometric level. In this case, lambda equals $\geq$1;

The strategy is designed to correct base pulse constants so that mixture concentration oscillates continually and at a high rate between 0.98 and 1.02.

This oscillation rate varies according to engine load and speed. It is in the order of a few Hertz (about 0.5 - 4 Hertz).

NOTE

1 Hz = 1 oscillation per second

Under conditions of:

- cut-off,
- throttle opening equal to about 60% (value is lower at low speeds)
- engine temperature less than 17 °C

the strategy is disenabled

Self-adaptability

The control unit features a self-adaptive function able to memorise deviations between basic maps and corrections imposed by the lambda probe that occur persistently during operation. Such deviations (due to system and engine component ageing) are saved permanently so that system operation can be adapted to gradual changes in engine and components with regard to original specifications. To delete the saved corrections, use the appropriate FIAT/LANCIA TESTER function. The corrections are **NOT** lost when the battery or control unit are disconnected
The strategy is de-activated while the fuel vapour cut-off solenoid is open. If the ECU is replaced, it is advisable to leave the engine to idle for a few minutes (engine warm) to allow the control unit to save the corrections again. The corrections at speeds faster than idle level are saved during normal driving conditions.
The control unit is also equipped with a self-adaptive function which corrects the engine idle speed actuator during idling on the basis of changes due to butterfly valve case leaks or natural engine ageing. This specific correction is lost when the battery or control unit is disconnected.

Copyright Fiat Auto

Starting and post-starting

During start-up, engine timing stage cannot be identified immediately and timed injection for the first injection to each cylinder cannot therefore be implemented.

An initial simultaneous injection is carried out during the first few engine revolutions (full group) because the considerable fluctuations in rotation speed do not permit injection time to be calculated correctly. Injection becomes phased only subsequently.

The base pulse constant is increased by a given factor throughout the period when the engine is cranked by the starter motor.

Once start-up has taken place, the factor is gradually reduced to zero within a given time period, which is in inverse proportion to engine temperature.

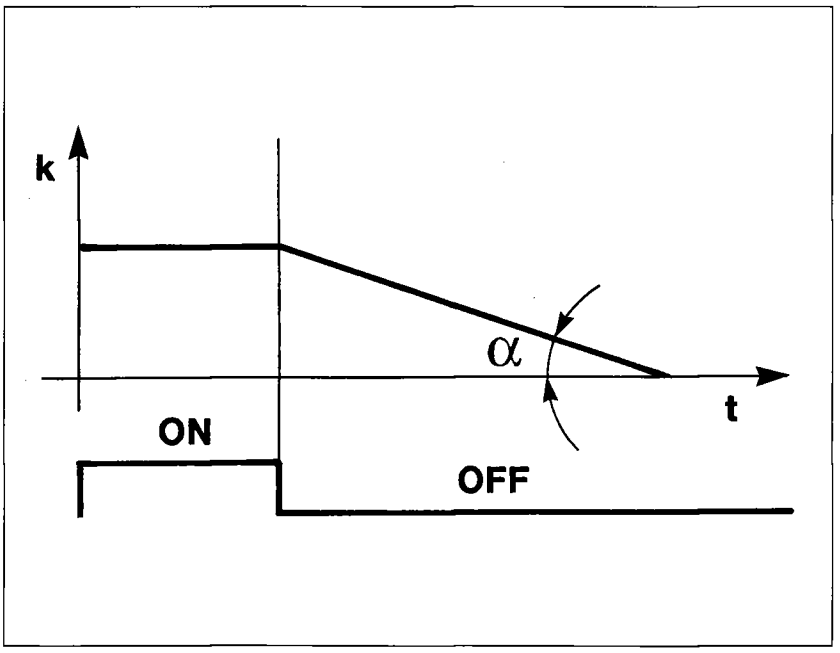

P4F06BJ01

k : enrichment factor
t : time
α : decrease proportional to engine temperature

ON: engine cranked
OFF: engine running

Operation when cold

Under these conditions, the mixture becomes naturally leaner due to reduced evaporation and heavy fuel condensation on the intake manifold internal walls. The greater viscosity of the lubrication oil also brings about an increase in the rolling resistance of internal engine components which also serves to exacerbate matters.

The electronic control unit recognises this condition and corrects injection time on the basis of the coolant temperature signal.

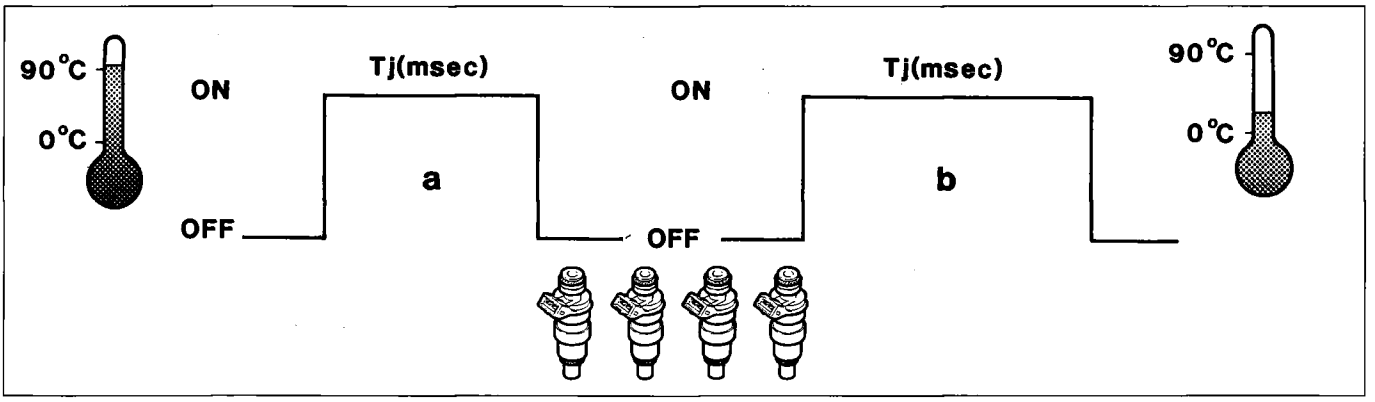

P4F06BJ02

As a result:

- At very low temperatures the injector stays open longer Tj) graph (b) for a low air fuel ratio (rich mixtures);
- As engine temperature increases, injector opening time becomes shorter (tj) graph (a) and the air/fuel ratio becomes correspondingly higher (lean mixture).

While the engine is warming up, the ECU also governs a step motor which is responsible for calculating the amount of air necessary to ensure the engine does not stall.

Rpm is decreased as the temperature rises until the rated level is reached (850 ± 30 Rpm) (880 ± 30 rpm for versions with automatic transmission) when the engine is warm. The ECU governs the step motor to maintain idle speed constant even if electrical and mechanical loads vary.

Full-load

Under full load conditions, base pulse constant must be increased to obtain maximum engine power output.

The ECU detects a full load condition as a result of parameters supplied by the throttle position and absolute pressure sensors.

On the basis of this information, the ECU implements the appropriate correction strategy by increasing base pulse constant.

Over-run

Two strategies are superimposed during this stage:

1. Transitory negative strategy to reduce the amount of fuel required by the engine (lower emissions).

   This stage is recognized by the ECU when the potentiometer signal changes from a higher voltage level to a lower value.

2. A dash-pot strategy to lessen changes in torque delivery (lower exhaust brake).
   This strategy is implemented when the potentiometer signal indicates that the throttle is closed and rpm is high. The step motor gradually decreases the flow of air through the by-pass.

Connection to automatic transmission

The ECU adjusts engine idle speed on the basis of the load input when the selector lever is moved to a given position (pin 50) and transmits information to the automatic transmission ECU on engine coolant temperature (pin 5) and throttle valve position (pin 44). The control unit reduces the level of torque supplied by the engine (mainly by altering the ignition advance) duringgear changes, when it receives an appropriate signal from the automatic transmission control unit (pin 32).

Barometric correction

Atmospheric pressure varies with altitude to bring about changes in volumetric efficiency of sufficient entity to require a correction to baseline concentration (injection time).
Injection time is corrected according to changes in altitude and updated automatically by the ECU whenever the engine is started up and under certain conditions of throttle position and rpm (dynamic adjustment of barometric correction)

Cut-off
The fuel cut-off strategy is activated when the ECU recognises that the throttle is in closed position (throttle potentiometer signal) and engine speed exceeds 1350 rpm (1750 rpm for version with automatic transmission). The ECU activates cut-off only when engine temperature exceeds 0° C.
The fuel supply is restored when the throttle is no longer closed or the engine speed is less than 1270 rpm (1650 rpm for version with automatic transmission).

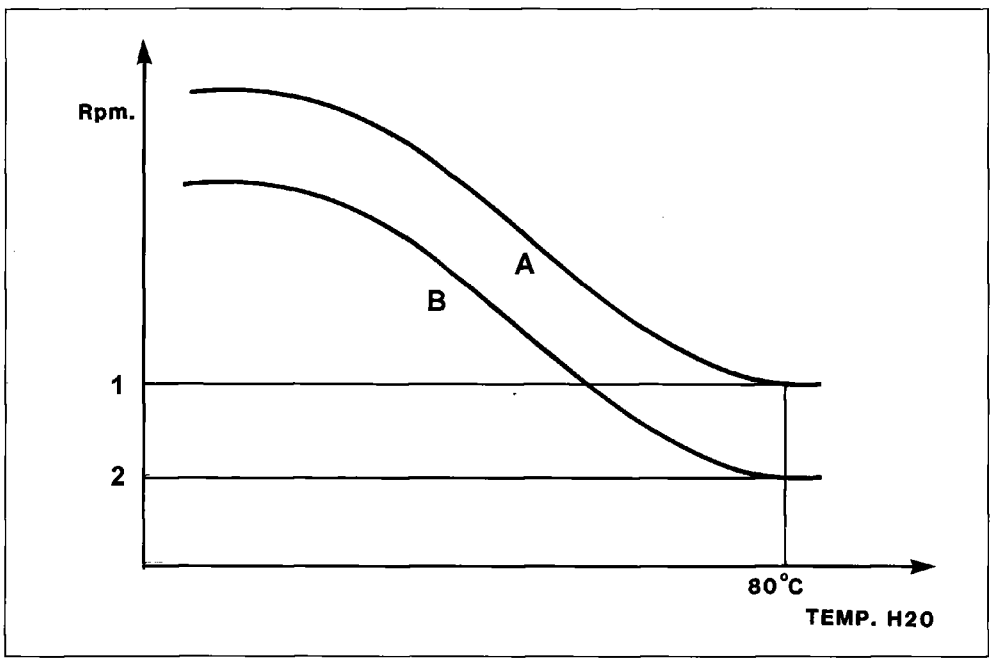

P4F08BJ01

Version with manual gearbox
1. 1350 rpm.
2. 1270 rpm.

Version with automatic transmission
1. 1750 rpm.
2. 1650 rpm.

A. entering cut-off
B. leaving cut-off

Acceleration
During this stage, the ECU increases the amount of fuel required by the engine (to achieve maximum torque) on the basis of signals from the following sensors:
- throttle potentiometer;
- absolute pressure sensor;
- rpm and TDC sensor.

The base pulse constant is multiplied by a factor according to coolant temperature and accelerator throttle opening speed.
If an abrupt change in injection time is calculated when the injector is already closed, the ECU reopens the injector (extra pulse), in order to make the concentration up to the required level as quickly as possible. Subsequent injections are automatically increased as described previously.

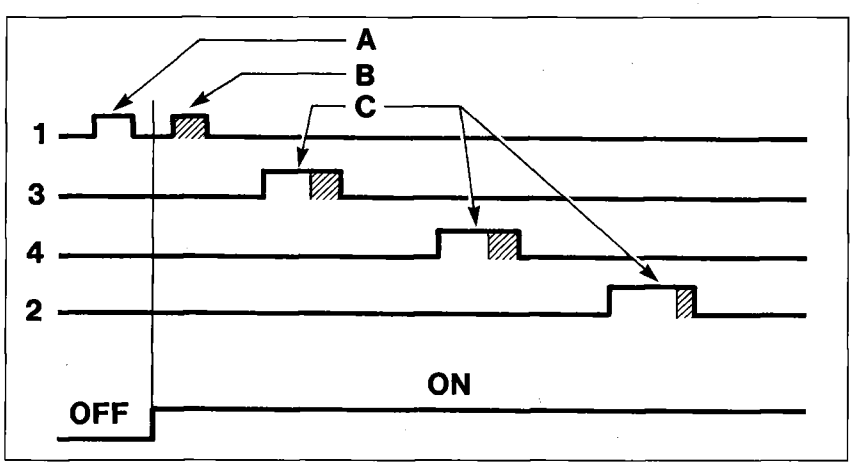

P4F08BJ02

A. normal injection time
B. injector re-opening (extra pulse)
C. injection time including enrichment
OFF. engine under steady-state conditions
ON. engine under transient conditions

Protection against excess rpm

When engine rpm exceeds an upper threshold of 6700 rpm imposed by the manufacturer for longer than 10 seconds or a critical upper limit of 6900 rpm for any time at all, the engine conditions become critical.

When the ECU recognises that this threshold rpm level has been exceeded, it reduces injector control time.

When rpm drops to non-critical levels, control is restored.

Electric fuel pump drive

The fuel pump is governed by the ECU through a dual relay.
The pump stops when:

- engine rpm drops below 50 rpm;
- after a certain time (about 5 seconds) with the key in MAR position without starting taking place (timed enablement).
- f the inertia switch is activated.

Injector control

Injectors are controlled in sequential, phased manner. During start-up, however, all injectors are initially all controlled in parallel (full-group).

Injector control timing varies according to engine speed and intake air pressure in order to improve cylinder filling because this makes for better fuel economy, good handling and lower emission levels.

FIAT CODE IGNITION LOCK FUNCTION MANAGEMENT)

The system features an anti-theft function. This is implemented through a special FIAT CODE control unit able to dialogue with the engine control unit, and an electronic key with a specific sender unit designed for sending an identification code.

Once the key has been turned to STOP, the FIAT CODE system de-activates the engine control unit completely.

When the key is turned to MAR, the following operations take place in sequence:

1 - the engine control unit (whose memory contains a secret code) sends the FIAT CODE a request demanding that a secret code be sent to de-activate the function lock:

2 - the FIAT CODE control unit responds by sending the secret code only after receiving a recognition code sent by the ignition key;

3 - recognition of the secret code allows the engine control unit lock to be de-activated and normal operation to proceed.

NOTE *When the FIAT CODE anti-theft system is present,* **DO NOT** *test the vehicle using another engine control unit. In this case, the FIAT CODE control unit would transfer the recognition code (unknown) to the test control unit, which would thus be rendered completely unserviceable on other vehicles.*

10.

IGNITION MANAGEMENT

The ignition circuit is static inductive discharge type, i.e. a high tension distributor with power modules located inside the injection-ignition control unit.

The system comprises two high tension twin outlet coils combined in a single container and connected directly to the spark plugs.

The primary winding of each coil is connected to the power relay (i.e. supplied by battery voltage) and pins of the ECU for connection to earth.

Once the start-up stage is over, the injection-ignition ECU implements a base pulse constant taken from a specific map in accordance with the following input parameters:

- engine rotating speed (rpm),
- absolute pressure reading (mmhg) obtained in intake manifold.

This advance setting is corrected according to temperature.

The advance angle is also subject to correction under the following conditions:

- during start-up;
- during transitory stages of acceleration and over-run.
- during cut-off.
- when rpm is excessive.
- when required by the automatic transmission ECU (gear changes).

For the ignition system to work efficiently, the ECU must recognise signal configuration (3).

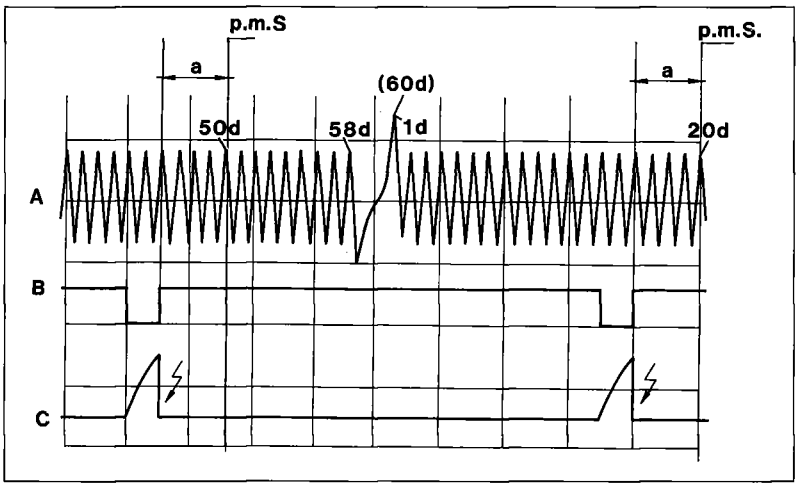

P4F10BJ01

A. Rpm sensor signal

B. Power control

C. Current running through coil primary winding

a. Ignition advance with reference to cylinder TDC

The gap or change in signal generated by the lack of two teeth on the phonic wheel, more specifically between the 58th and 1st tooth (known also as the synchronism tooth) which occurs each time the crankshaft pulley turns is a reference signal which allows the ECU recognition 114° in advance of TDC of piston pair 1-4 in correspondence to falling front of 20th tooth.

Once the ECU (see following page) has received the correct T.D.C. signal configuration, it establishes the point at which conduction (supply) to primary circuits of coils (6) begins and makes internal power module (5) conductive.

The rising side of signal (graph B in figure on previous page) therefore represents a moment within which alternative primary winding conduction could take place. This point can be established only by the control unit power module. The conduction time the H.T. coil needs in order to store sufficient energy is also defined by DWELL management strategies. This depends on the time taken by the current to reach about 6A in the coil primary winding and also on the calculation algorithm run by the microprocessor which uses factors saved in a special memory, obviously based on engine rpm

With reference to the figure on the previous page, the falling side of the signal, (B) conduction end point (or current drop to zero), is a categorical order to cut-off the current flowing in the primary winding and represents the ignition advance point (a) processed by the computer (advance - (a) - varies according to rpm).

The control unit (ECU) then controls spark advance in the different cylinders in relation to top dead centre and conduction time necessary for the coil to store energy by controlling the two power stages (corresponding to ECU pins 55 and 37). These in turn permit current to flow through primary windings of coils (6) for long enough to ensure the specified 6A current rating.

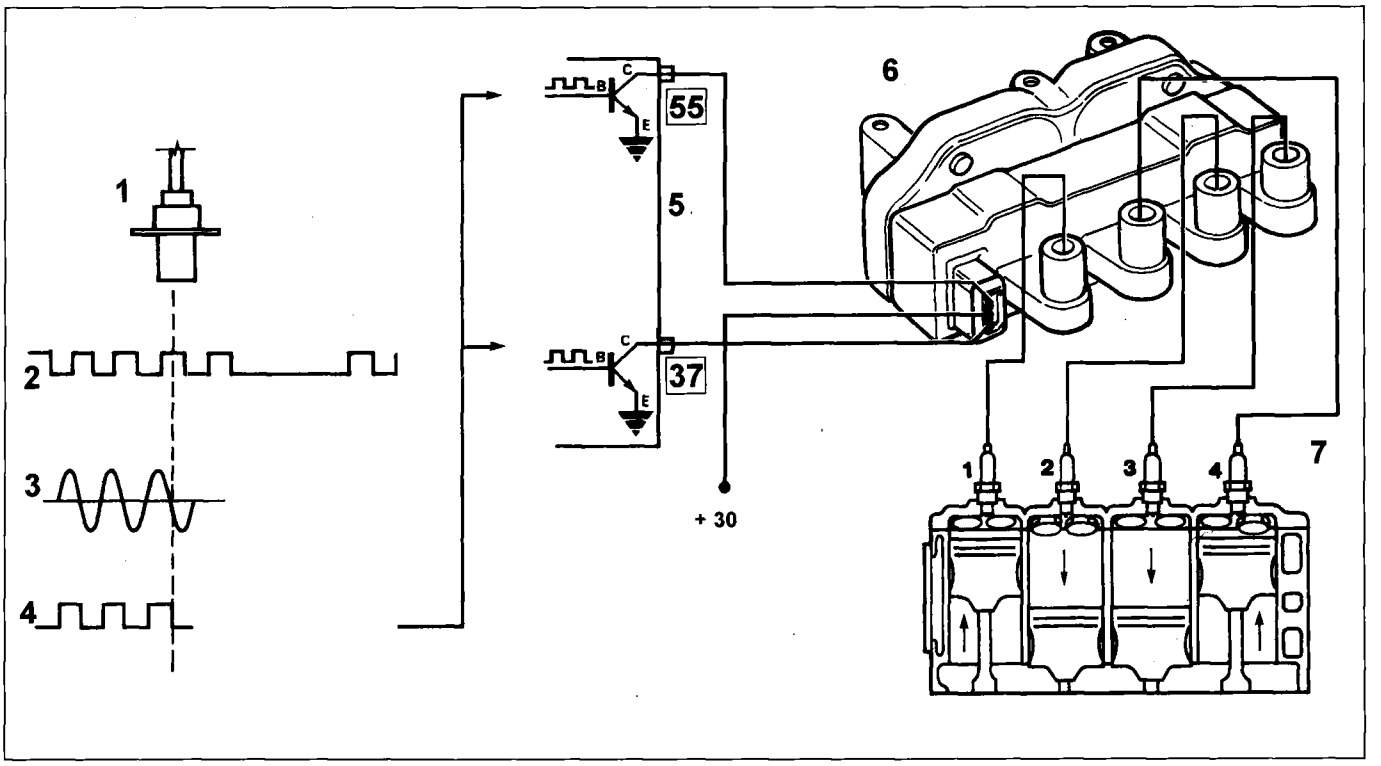

P4F11BJ01

Ignition operating diagram

1. RPM and TDC sensor.
2. Phonic wheel.
3. Signal pattern taken from phonic wheel (60-2) teeth.

   TDCs correspond to teeth 20 and 50.
4. Succession of rectangular square wave signals of constant amplitude
5. Ignition power module (inside control unit).
6. Ignition coils.
7. Spark plugs

NOTE *The numbers in boxes indicate the corresponding control unit pins*

At the moment when the ECU de-activates one of the two power stages, current flow is cut off. This generates a voltage by induction (up to 30kV without loads) in the secondary winding.

10.

When the voltage required for triggering an arc between the spark plug electrodes is examined, we note that voltage is high in the cylinder undergoing compression (greater than 10kV) while it is reduced (about 5kV) in the cylinder undergoing exhaust.

High tension distribution is static, i.e. takes place without a rotary brush and cap. This system effectively does away with a distributor. This gives the system a considerable advantage because it is known that brush and cap insulation properties play an important role. Any loss of insulation to earth may impair ignition: particularly during winter or periods of heavy rain.

The spark plugs of cylinders 1-4 and 2-3 are connected directly (in pairs) by means of high tension leads to coil secondary winding terminals and may be considered to be connected in series, because the cylinder head joins them all. This solution is also known as a "lost spark" system because the energy built up by the coil discharges almost exclusively on the electrodes of the spark plug located in the cylinder under compression to allow mixture ignition. The other spark is obviously unused because the cylinder does not contain mixture for ignition - solely exhaust gas ready for venting.

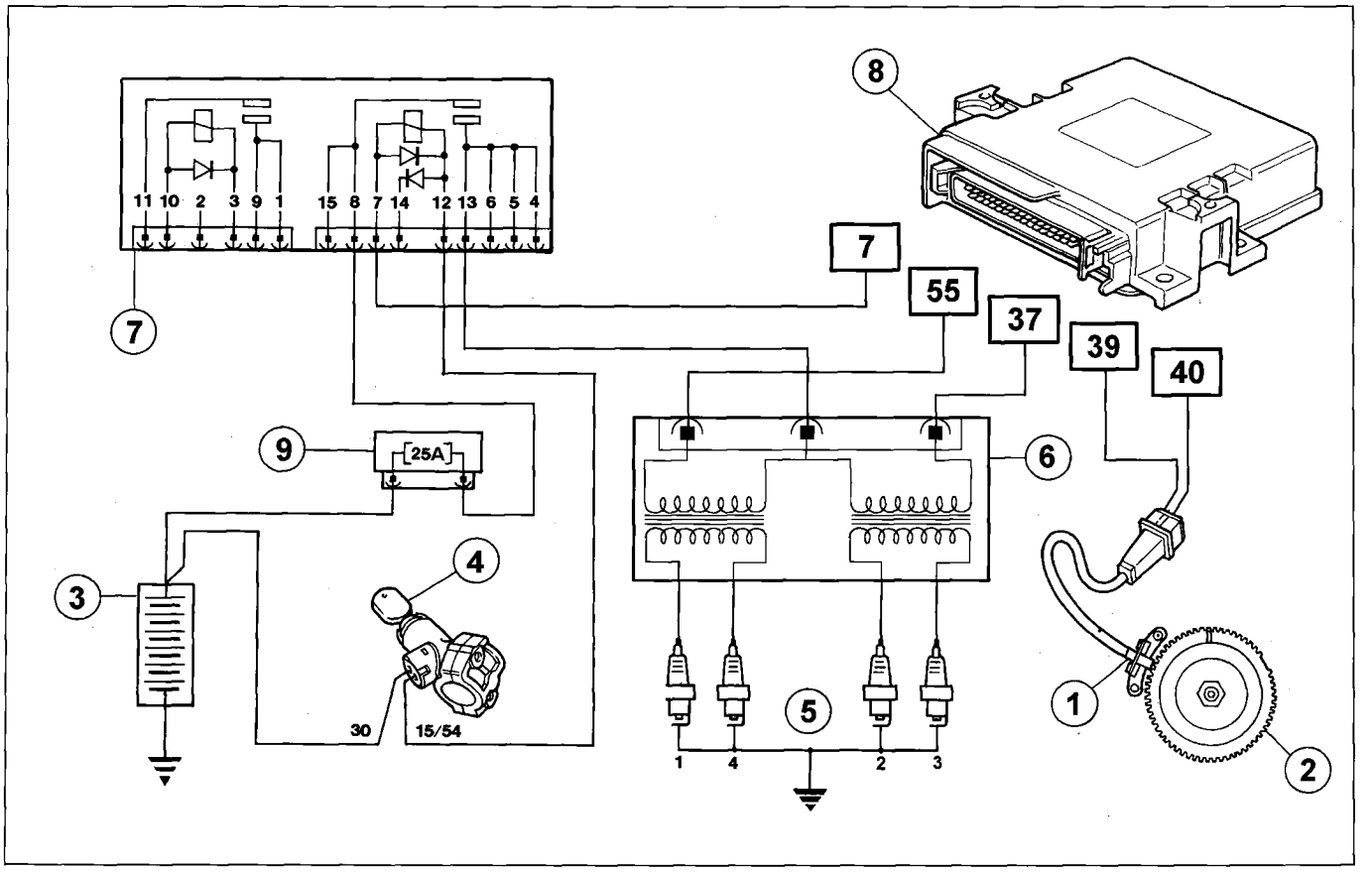

P4F12BJ01

1. Rpm and TDC sensor
2. Crankshaft pulley with phonic wheel
3. Battery
4. Ignition switch
5. Spark plugs
6. Ignition coils
7. Dual relay
8. Injection-ignition ECU
9. Injection-ignition system fuse

ENGINE IDLE CONTROL

The main aim of this strategy is to maintain engine speed at around the mapped setting (warm engine: 850 rpm): the position assumed by the actuator is dependent on engine conditions/rpm and vehicle speed.

Start-up stage

When the key is inserted, the actuator takes up a position dependent on engine temperature and battery voltage (open-loop position).

Warming-up stage

The rpm is mainly corrected on the basis of coolant temperature.

With the engine warm, idle management is dependent upon the signal from the rpm sensor. The ECU introduces sustained idle when external loads are activated.

Over-run

When the accelerator is released when the car is not idling, the ECU governs the actuator (step motor) by means of special delivery curve (dash-pot curve), i.e. delays the return of the plunger to its housing to bring about a reduction in engine braking effect.

FUEL VAPOUR RECIRCULATION MANAGEMENT

The strategy controls vapour cut-off solenoid position as follows:

- during start-up, the solenoid remains closed to prevent fuel vapours enriching the mixture excessively. This condition persists until coolant temperature reaches 65° C;
- with the engine warm, the ECU sends the solenoid a square wave signal (duty-cycle control) which modulates opening.

In this way, the ECU controls the amount of fuel vapour directed to the intake, thus avoiding substantial changes in mixture concentration.

Under the following operation conditions:

- throttle valve closed
- speed less than 1500 rpm
- intake manifold pressure less than a lower threshold calculated by the ECU in accordance with rpm level

solenoid control is inhibited with the same closure position maintained. This makes engine operation more efficient.

TEST MANAGEMENT

Full injection-ignition system electronic testing can be achieved by connecting a FIAT/LANCIA TESTER to the test socket.

The system is also equipped with a self-diagnostic function which recognises, memorises and indicates any faults.

If sensors or actuators are found to be faulty, signal reconstruction strategies are immediately activated (recovery) so that the engine is able to operate at an acceptable level without affecting function. The car can then be driven to a service point for the necessary repairs.

Copyright Fiat Auto

HEATING/VENTILATION SYSTEM MANAGEMENT

Rpm decreases when the air conditioner is turned on because the system compressor takes up power.

This involves a drop in rpm, which is particularly evident during idling.

To overcome this drawback, when the ECU is informed of air conditioner activation (pin 10) before the activation command is received (pin 26), it increases air flow by adjusting the engine idle speed actuator.

When (during driving conditions) a power requirement is identified (throttle position higher than a given threshold) or engine speed is lower than a certain level, the ECU inhibits air conditioner operation to improve vehicle performance.

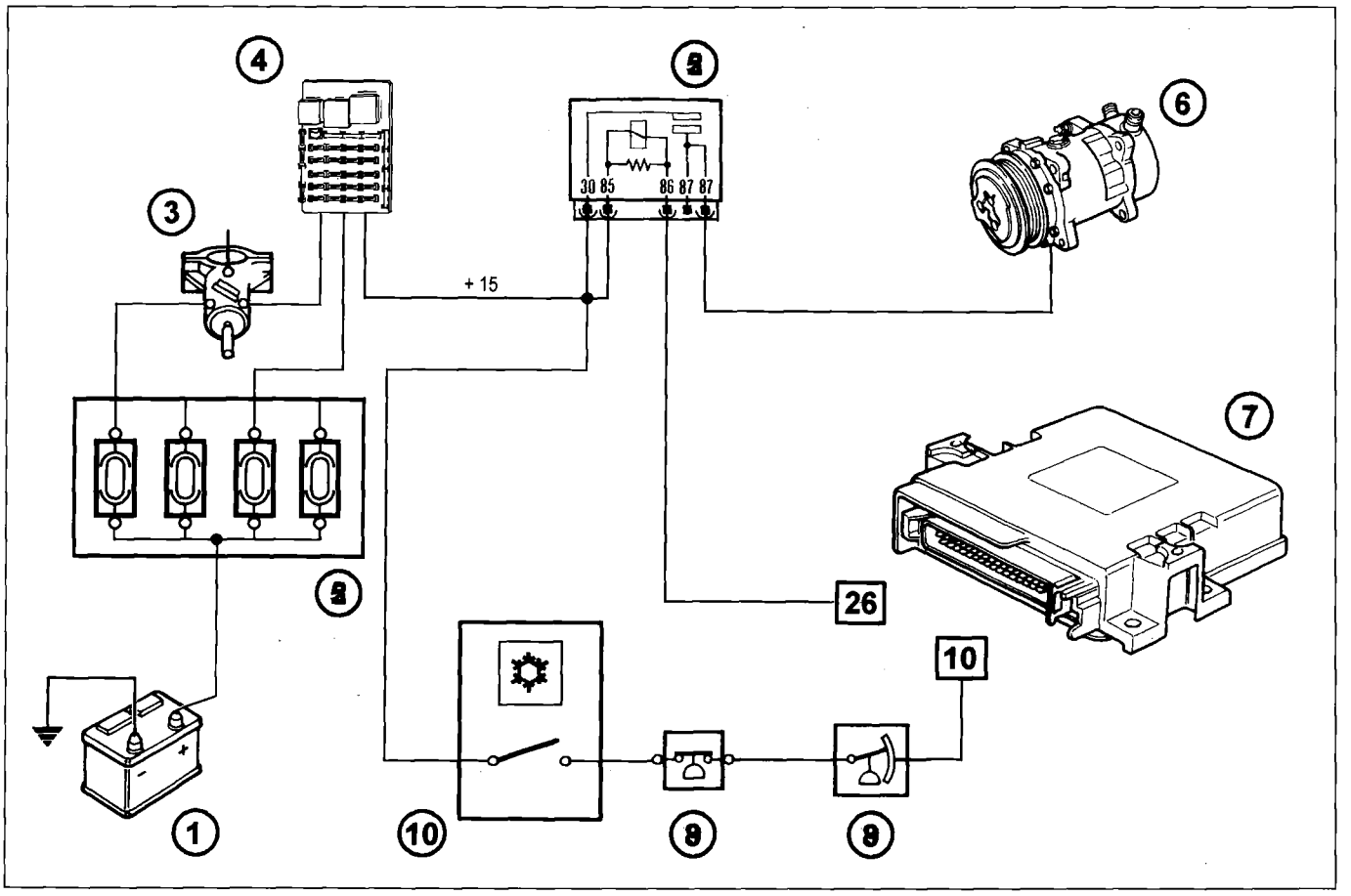

P4F14BJ01

1. Battery
2. Power fuse box
3. Ignition switch
4. Junction unit
5. Compressor electromagnetic coupling supply relay
6. Compressor
7. Electronic injection-ignition control unit
8. Three stage pressure switch
9. Defrosting sensor
10. Air conditioner activation switch

DIAGRAM SHOWING INPUT/OUTPUT BETWEEN INJECTION-IGNITION SYSTEM ECU AND SENSORS/ACTUATORS

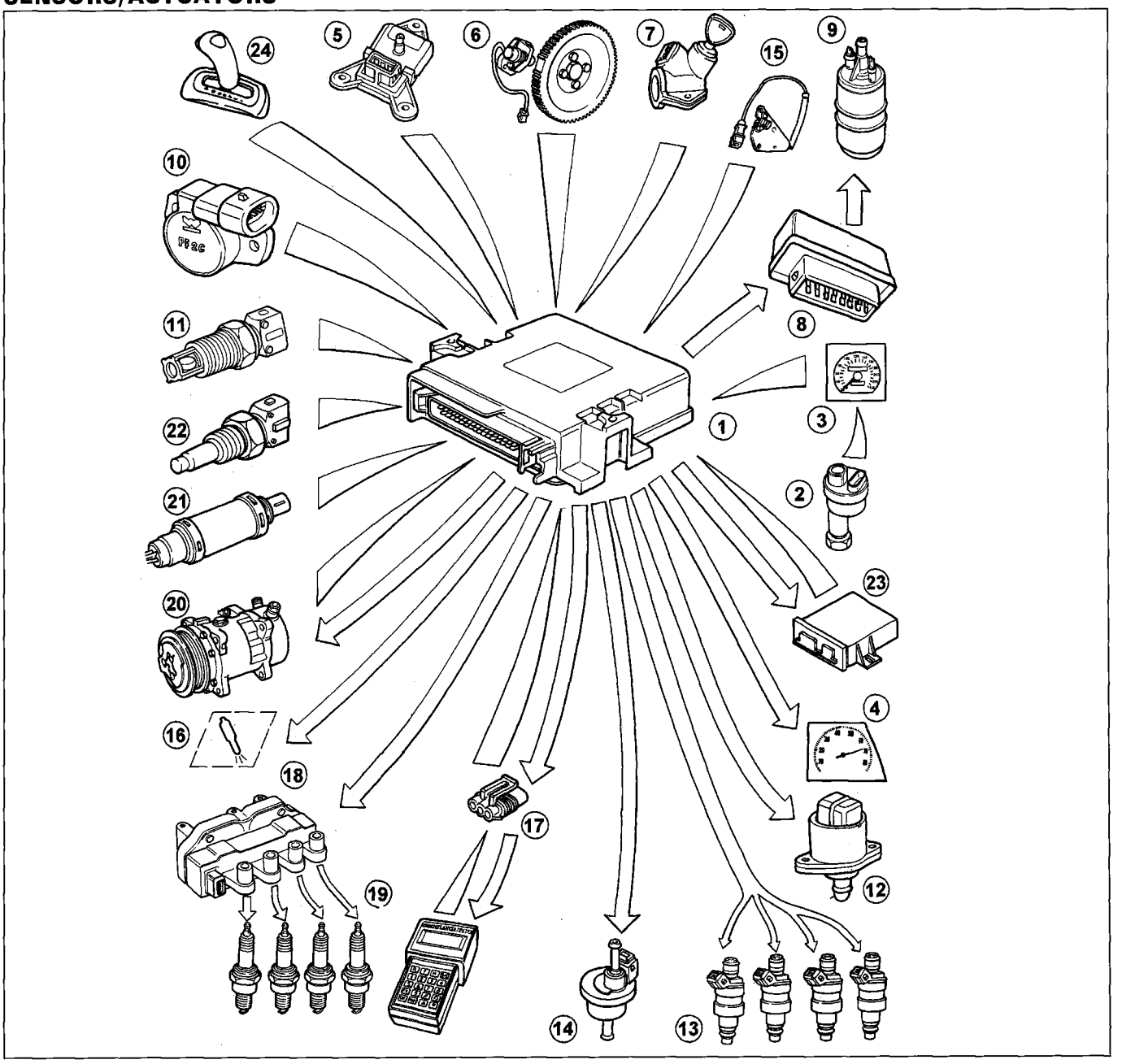

P4F15BJ01

Key to components

1. Electronic control unit
2. Speedometer sensor
3. Speedometer/mileometer
4. Rev counter
5. Absolute pressure sensor
6. Rpm and TDC sensor
7. Ignition switch
8. Dual relay
9. Electric fuel pump
10. Throttle position sensor
11. Air temperature sensor
12. Engine idle speed actuator
13. Injectors
14. Fuel vapour cut-off solenoid
15. Timing sensor
16. Injection warning light
17. Diagnostic socket
18. Coils
19. Spark plugs
20. Air conditioner compressor
21. Lambda probe
22. Coolant temperature sensor
23. FIAT CODE control unit
24. Automatic transmission

Copyright Fiat Auto

10.

AIR INTAKE CIRCUIT MANAGEMENT

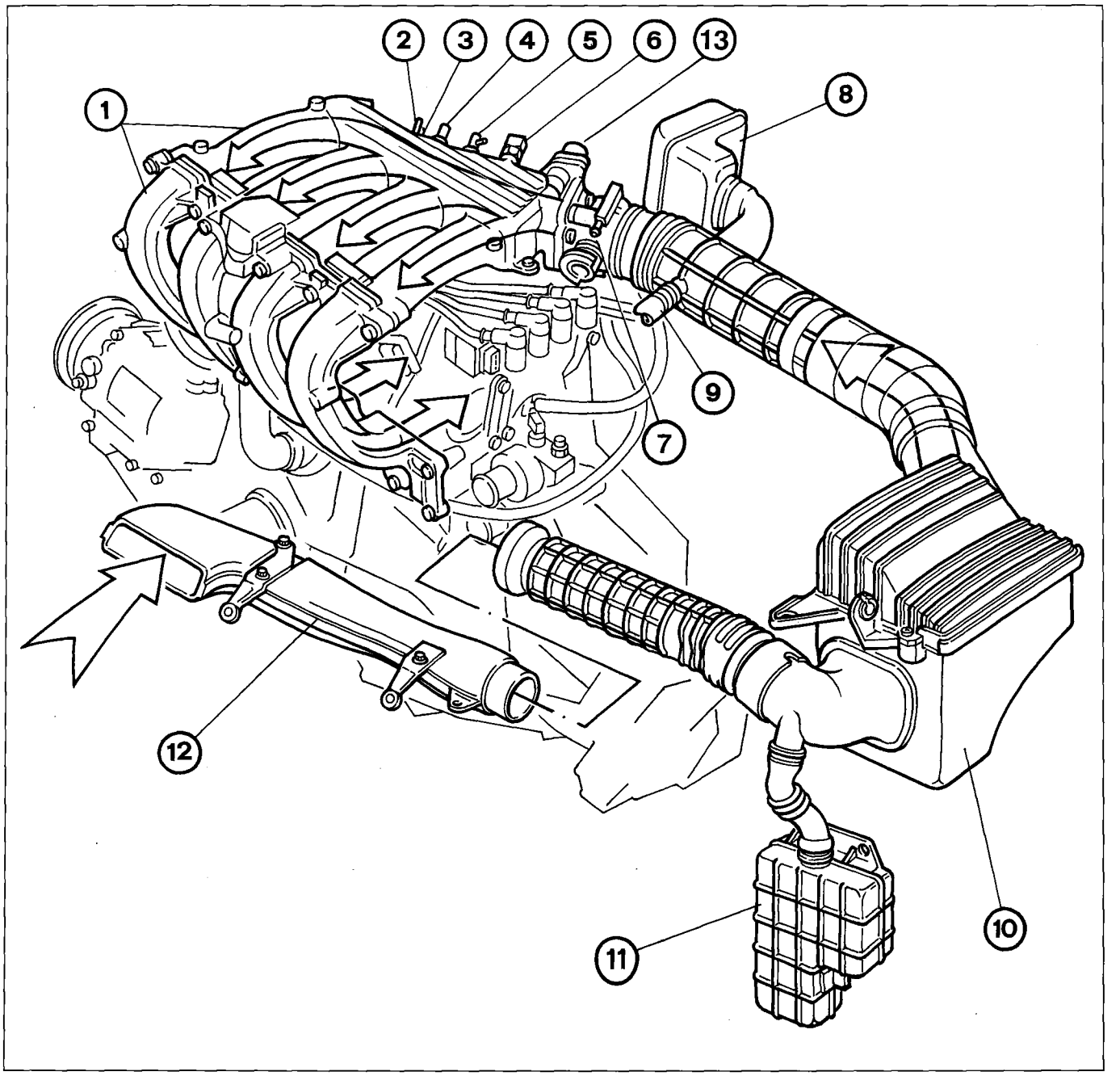

P4F16BJ01

The air intake circuit consists of various components which ensure the correct amount of air is carried to the engine under different operating conditions.

1. Inlet manifold
2. Evaporation control system socket
3. Socket for Absolute pressure sensor
4. Socket for servo brake
5. Socket for fuel pressure regulator
6. Air temperature sensor
7. Butterfly valve case
8. Upper resonator
9. Gas uptake from crankcase
10. Air cleaner
11. Lower resonator
12. Inlet fitting
13. Engine idle speed actuator

FUEL SUPPLY CIRCUIT DIAGRAM

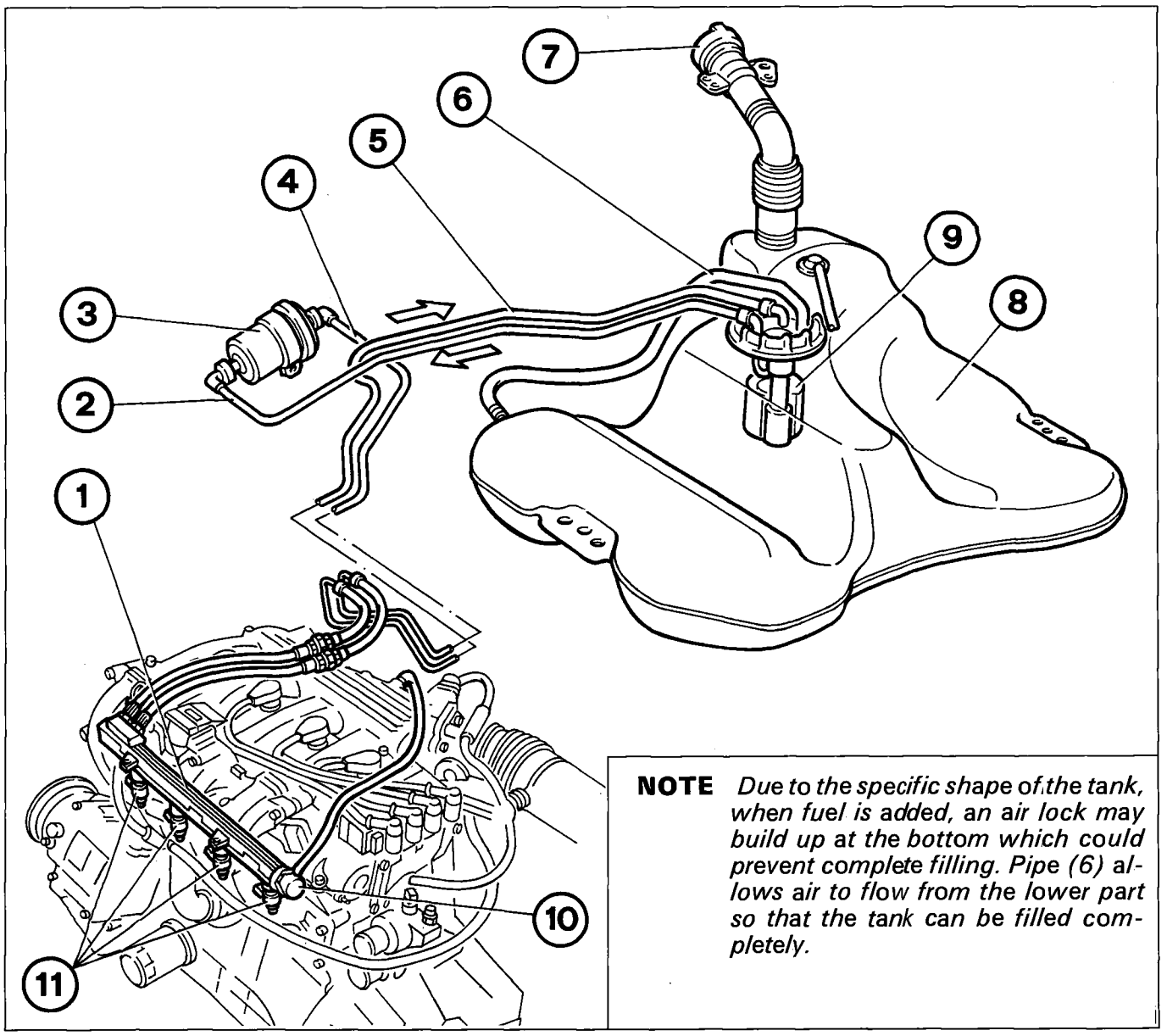

NOTE *Due to the specific shape of the tank, when fuel is added, an air lock may build up at the bottom which could prevent complete filling. Pipe (6) allows air to flow from the lower part so that the tank can be filled completely.*

P4F17BJ01

1. Fuel supply manifold
2. Delivery line from tank to filter
3. Fuel filter
4. Delivery line from filter to injectors
5. Return line
6. Vent pipe
7. Union with vent and pressure relief valve
8. Tank
9. Electric fuel pump
10. Pressure regulator
11. Injectors

Fuel is supplied by means of a pump submerged in the fuel tank, which draws up fuel and directs it to the filter and injectors.
Fuel feed pressure to the injections is maintained constant and proportional to the pressure difference set up in the inlet manifold by the Pressure regulator, which adjusts the fuel flow to maintain a constant pressure gap to the injectors.
Excess fuel is allowed to flow back into the tank, unpressurised, from the pressure regulator.

Copyright Fiat Auto

10.

FUEL EVAPORATION CONTROL CIRCUIT DIAGRAM

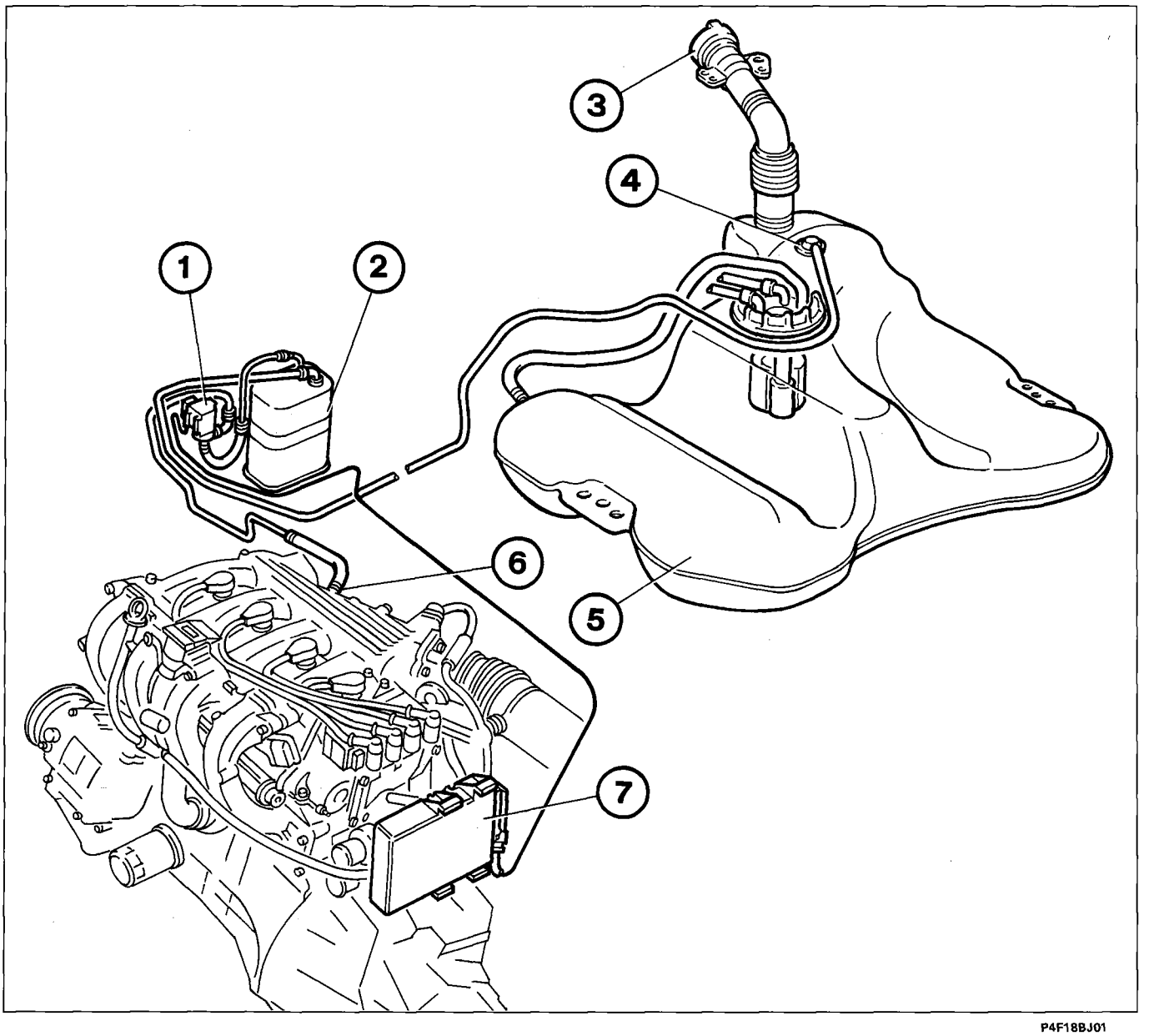

P4F18BJ01

1. Fuel vapour cut-off valve
2. Active carbon trap filter
3. Safety and ventilation valve
4. Multifunction valve
5. Tank
6. Fuel vapour intake fitting in intake manifold
7. Injection-ignition ECU

The system adopted for tank ventilation is closed-loop type.
The system prevents fuel vapour formed in the tank and fuel system to escape into the atmosphere and release their load of polluting light hydrocarbons (HC).
The system consists of tank (5), multifunction valve (4) to control vapour flow, a two-way pressure relief and ventilation valve (3) in the fuel filler fitting, an active carbon filter (2) and a fuel cut-off valve (1) which is controlled by control unit (7).

BLOW-BY GAS RECIRCULATION DIAGRAM

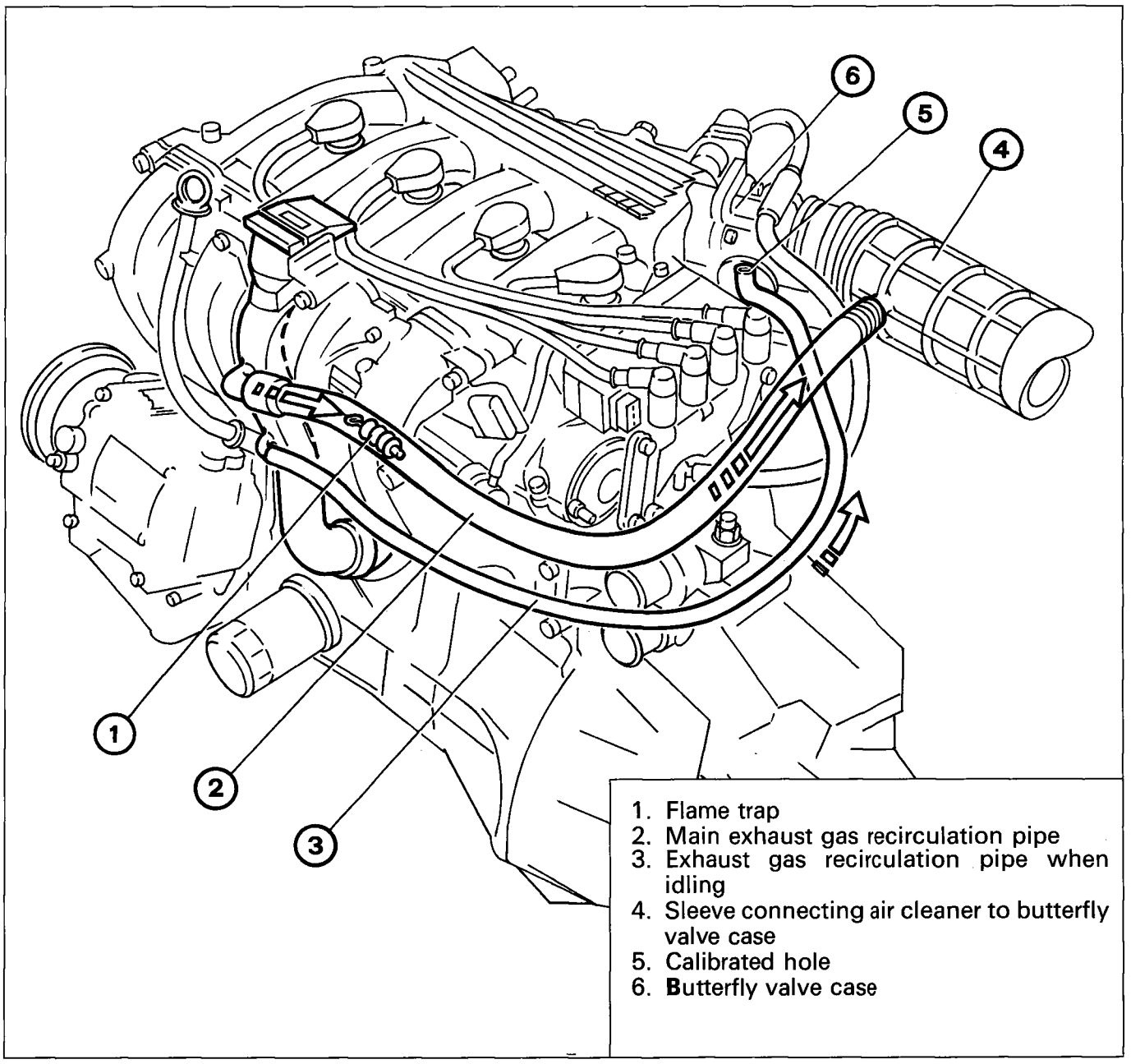

P4F19BJ01

The system controls emission, from the engine block, of vent gases made up of air-fuel mixtures, burnt gases which leak through piston rings and lubricant oil vapours by recirculating them to the intake.

With the accelerator throttle open, vent gases from the engine block reach the sleeve connecting the air cleaner-butterfly valve case (4) through pipe (2). This contains a flame trap (1) which prevents combustion caused by flame flashing back from the butterfly valve case (6).

With the throttle closed (engine idling), the vacuum in the intake manifold takes up gas (in limited quantities) directly through the pipe (3) and calibrated hole (6).

Copyright Fiat Auto

INJECTION-IGNITION SYSTEM ELECTRONIC CIRCUIT DIAGRAM

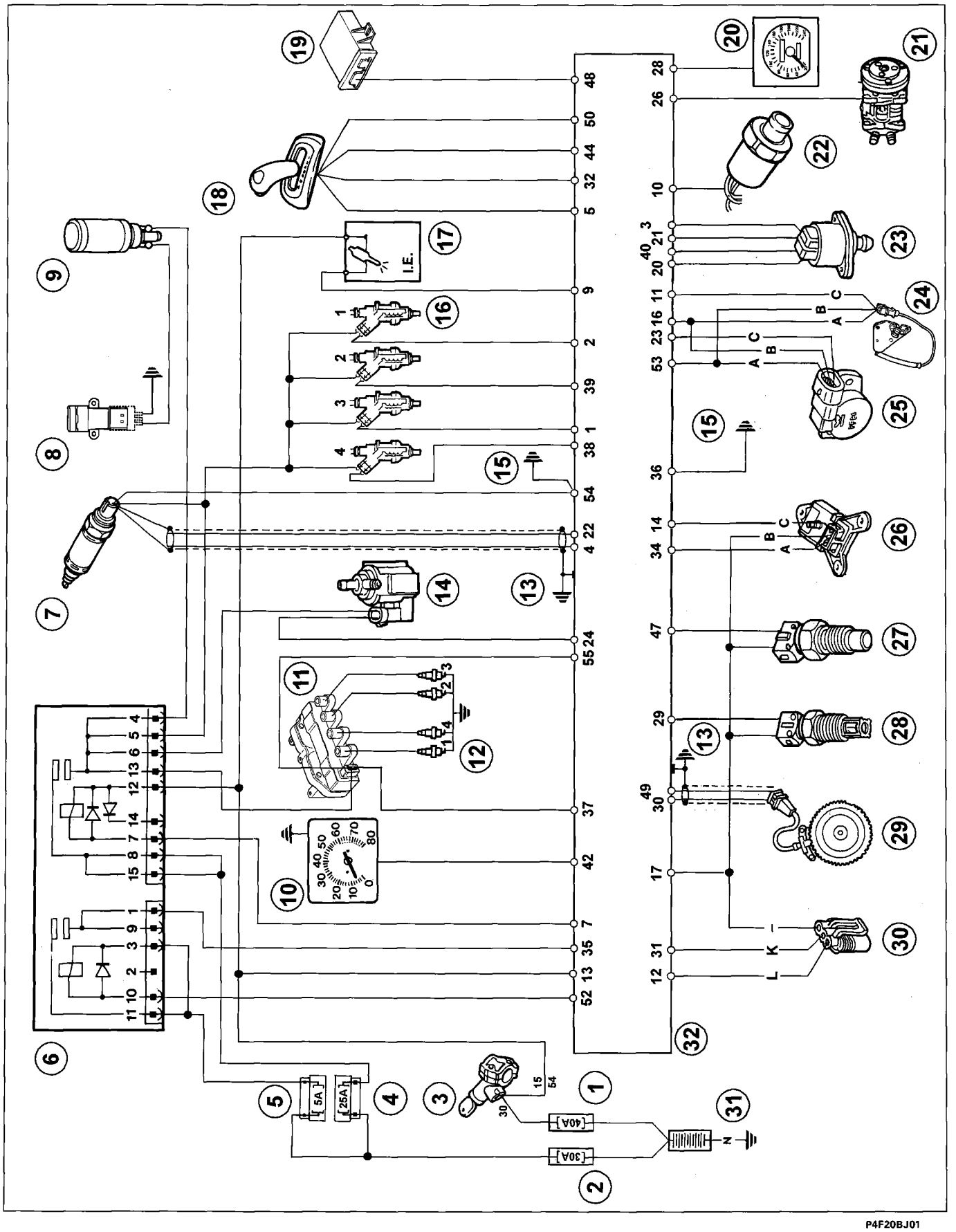

P4F20BJ01

Key to components in injection-ignition system wiring diagram

1. General 40A fuse for services activated by ignition key
2. General 30A system fuse for injection-ignition system
3. Ignition switch
4. 25A fuse for components supplied by dual relay (electric pump, lambda probe, injectors and fuel vapour cut-off solenoid)
5. 5A fuse for injection-ignition system
6. Dual relay
7. Lambda probe
8. Inertia switch
9. Electric fuel pump
10. Rev counter
11. Ignition coils
12. Spark plugs
13. Earth on body shell
14. Fuel vapour cut-off solenoid
15. Earth on engine
16. Injectors
17. System warning light
18. Automatic transmission
19. FIAT CODE control unit
20. Speedometer signal
21. Air conditioner compressor
22. Three stage pressure switch
23. Engine idle speed actuator
24. Timing sensor
25. Throttle valve position sensor
26. Absolute pressure sensor
27. Coolant temperature sensor
28. Air temperature sensor
29. Rpm and TDC sensor
30. Diagnostic socket

Copyright Fiat Auto

10.

ENGINE EXHAUST ASSEMBLY DIAGRAM

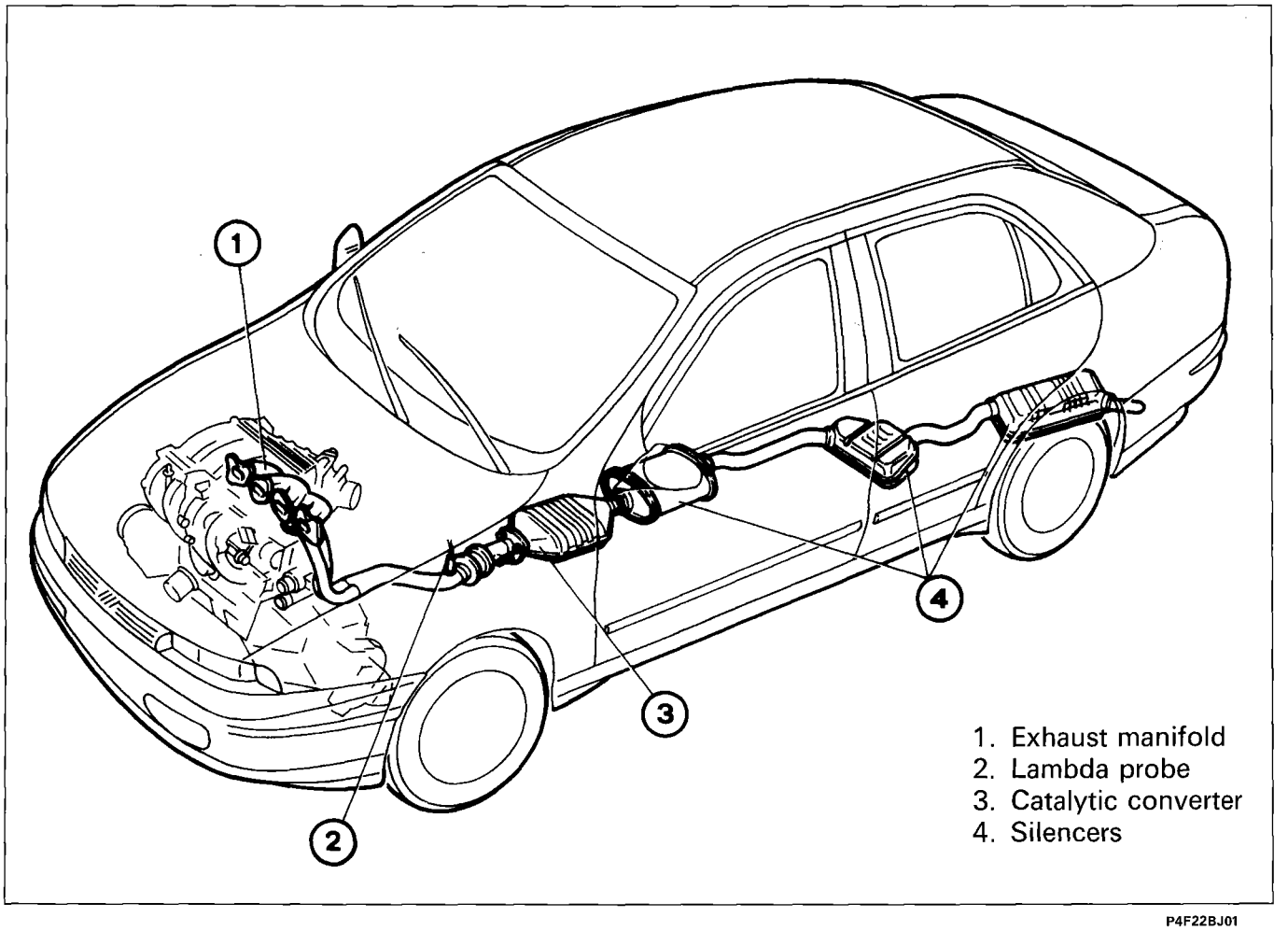

P4F22BJ01

In the I.A.W. system, mixture concentration control occurs in a closed loop. It is activated by a sensor and lambda probe which records exhaust gas oxygen content upstream of the catalytic converter.
The lambda probe measurements allow the electronic control unit to correct mixture concentration continually to maintain the air/fuel ratio constant.
This control of harmful exhaust emissions is complemented by the action of a trivalent catalytic converter
Effective catalytic converter operation and hence exhaust gas toxicity is dependent on the air/fuel ratio supplied to the engine.
The trivalent catalytic converter allows simultaneous removal of the three pollutant gases present in the exhaust gas: uncombusted hydrocarbons (HC), carbon monoxide (CO) and nitrogen oxides (NOx).
Two types of chemical reaction take place inside the catalytic converter:
- oxidation of CO and HC to form carbon dioxide (CO_2) and water (H_2O)
- reduction of NOx to form nitrogen (N_2).

The catalytic converter may be put quickly and irreparably out of service by the following causes:
- presence of lead in petrol, which would lower conversion levels to a point where the presence of the converter in the system would be pointless;
- presence of uncombusted fluid in the catalytic converter. A 30s fuel flow at a temperature of 800 °C (temperature inside the catalytic converter) is sufficient to bring about catalytic converter melt-down. It is absolutely necessary for the ignition system to work efficiently. **The spark plug leads should never be disconnected with the engine running and the catalytic converter should therefore be replaced with an equivalent section of pipe during tests.**

LOCATION OF COMPONENTS INJECTION-IGNITION SYSTEM

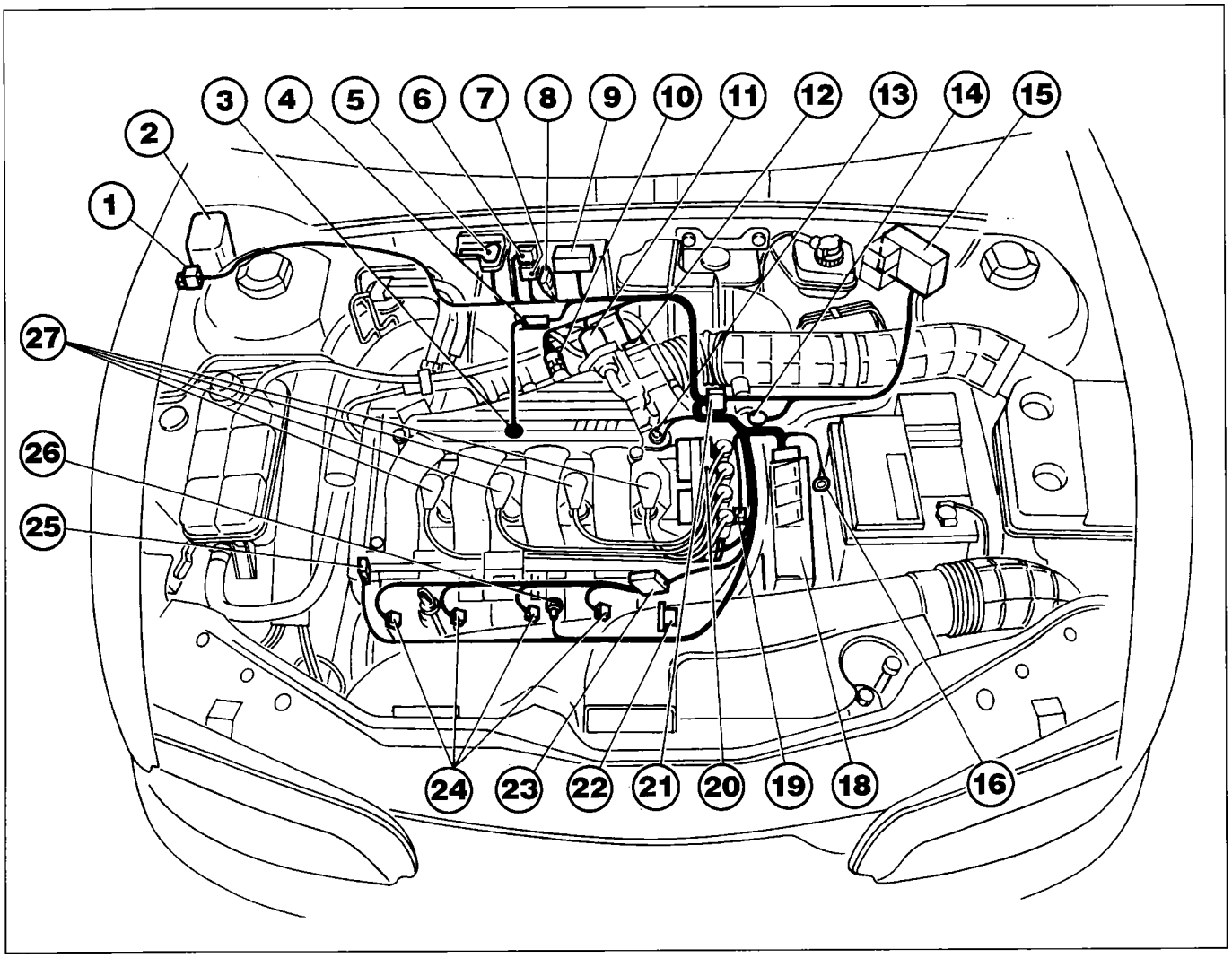

P4F23BJ02

Key to components

1 Fuel vapour cut-off solenoid
2 Carbon filter
3 Lambda probe
4 Lambda probe coupling
5 Absolute pressure sensor
6 5A fuse for injection-ignition system
7 20A fuse for components supplied by dual relay (electric pump, lambda probe, injectors and fuel vapour solenoid)
8 Tester socket
9 Dual relay
10 Air temperature sensor
11 Engine idle speed actuator
12 Throttle position sensor
13 Earth on engine
14 Vehicle speed sensor
15 General 30A system fuse
16 Wire shielding earth
18 Injection-ignition ECU
19 Coolant temperature sensor
20 Ignition coils
21 Joint between injection lead and front lead
22 Fuel pressure regulator
23 Injector lead coupling
24 Injectors
25 Timing sensor
26 Rpm and TDC sensor
27 Spark plugs

Copyright Fiat Auto

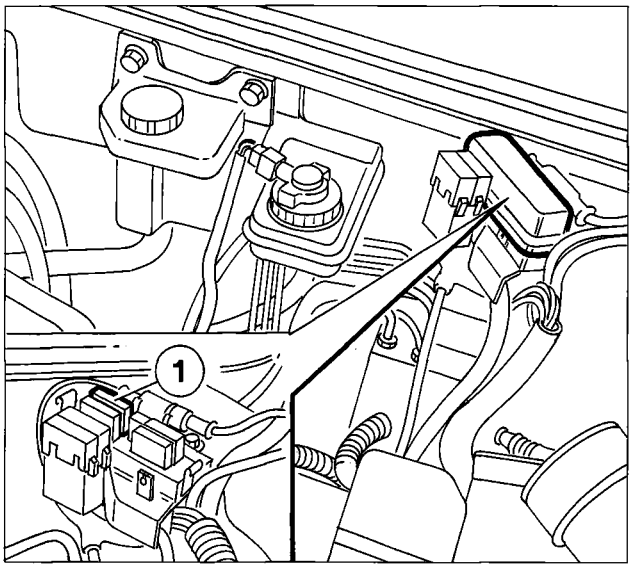

P4F24BJ01

INJECTION - IGNITION SYSTEM FUSES AND RELAYS

General system protection fuse

The general fuse (30A) protecting the injection-ignition system (1) is housed inside a container; to gain access to the fuse, undo side clips and lift lid.

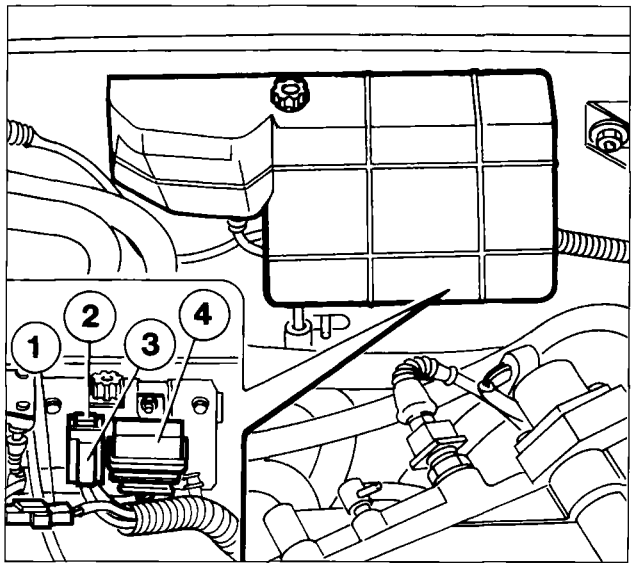

P4F24BJ02

Fuses and relays

The following components are housed on a bracket located against the rear wall of the engine bay:

1. Lambda probe lead junction
2. 5A ECU fuse
3. 25A fuse for components supplied through dual relay (electric pump, lambda probe, injectors and fuel vapour cut-off solenoid)
4. Dual relay

Unscrew ring nut and remove cover to gain access to the above components.

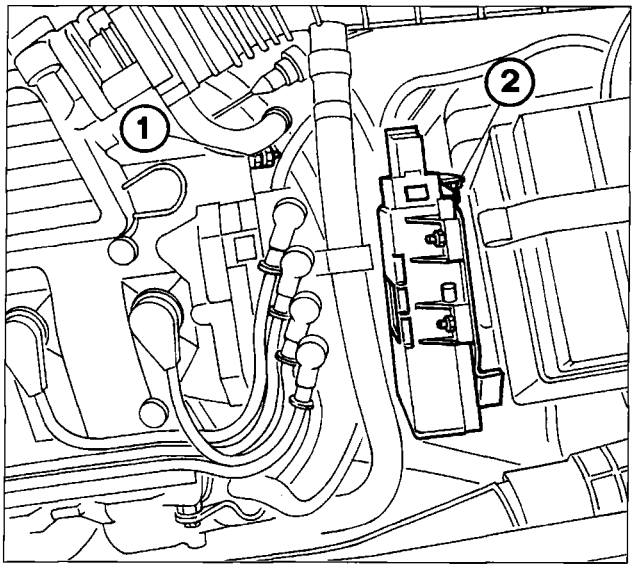

P4F24BJ04

EARTH POINTS

To increase electromagnetic compatibility and functional reliability, the earth points have been located with particular care as shown in the following diagram:

1. Earth on engine near exhaust valve cover.
2. Earth on control unit bracket for lambda probe lead shield and rpm and TDC sensor.

COMPONENTS OF INJECTION-IGNITION SYSTEM

The injection-ignition system consists mainly of wiring, an electronic control unit (ECU) and the following sensors and actuators:

Sensors

-Rpm and TDC sensor

-Timing sensor

-Throttle position sensor

-Coolant temperature sensor

-Intake air temperature sensor

-Absolute pressure sensor

-Vehicle speed sensor

-Lambda probe

Actuators

-Engine idle speed actuator

-Electric fuel pump

-Fuel vapour cut-off valve

-Injectors

-Ignition coils

-Dual relay

INJECTION-IGNITION SYSTEM WIRING

The various system components are connected by a single wiring system fitted with connectors of various types. These are grouped in special ducts fitted to the engine (prewiring).

INJECTION-IGNITION ECU

The injection-ignition system ECU adopted is specific to this version and connected to the electrical system by a multiple 55 pin connector

It is a digital microprocessor unit with high computing capacity and is accurate, reliable, versatile. It consumes little energy and is maintenance free.

The ECU's task is to process signals from the various sensors through the application of software algorithms and control the actuators (particularly the injectors, ignition coils and idle actuator) in order to achieve optimal engine performance.

Essential features of the electronic control unit are as follows:

- Data acquisition and coding section
- Microprocessor
- ROM memory
- RAM memory
- EEPROM memory
- Drivers

a. **Data acquisition and coding section**

This consists of a set of electronic components designed to receive data in the form of analogue electrical signals. Inside, the signals are converted into digital signals, processed and stored.

b. Microprocessor

This electronic component is responsible for computing and managing acquired data. It is thus a true computer and its main tasks include: consulting memories, comparing data input with sample data, managing actuator control circuits.

c. ROM memory (Read Only Memory)

This contains all programs necessary for microprocessor operation. Because the unit is programmed permanently prior to installation, data may be read but not modified.

The ROM memory is conservative; commands are saved even when the battery leads are disconnected.

d. RAM memory (Random Access Memory)

The RAM memory is a transitional memory where data can be read and saved.

This memory is actually used to save input data temporarily so that they are available for processing and also to memorize signals for coding operating anomalies that may occur within sensors, actuators or ECU functions.

The RAM memory is divided into sections: the first volatile part, for data memorization, is enabled with ignition key in MARCIA position and deleted in STOP position.

The second non-volatile part, (RAM STAND-BY) saves engine parameters and adapts them in time. In other words, the ECU uses the Lambda probe signal to modify and store an injection time correction factor that influences mixture concentration.

Self-adaptive corrections to the engine speed actuator require a continual supply from the battery in order to be maintained (memory in STAND-BY).

If the battery, dual relay or terminals are disconnected, the parameters are zeroed. Normal vehicle use resets the adaptation process and new parameters are memorized.

e. **EEPROM memory (Electrical Erasable Programmable Read Only Memory)**

This is a special type of memory that can be deleted electrically and reprogrammed again and again. One of its functions is to receive from the RAM STAND-BY recordings of anomalies that have arisen during engine operation and send these through the diagnostic socket to a Fiat-Lancia Tester. A Fiat-Lancia Tester must be used in active diagnosis in order to delete the anomalies.

The presence of a non volatile memory allows data relating to system anomalies to be saved even if the battery is disconnected and anomalies to be indicated even once they have been absent for 5 consecutive start-ups (one start-up +20' engine operation).

f. Drivers (final power stages for actuator control)

Drivers (final power stages for actuator control)These circuits are driven directly by the microprocessor and the relevant integrated circuit. They are used to supply actuators such as: injectors, step motor for idle control, carbon filter flushing valve, fuel pump relay, ignition coil main relay.

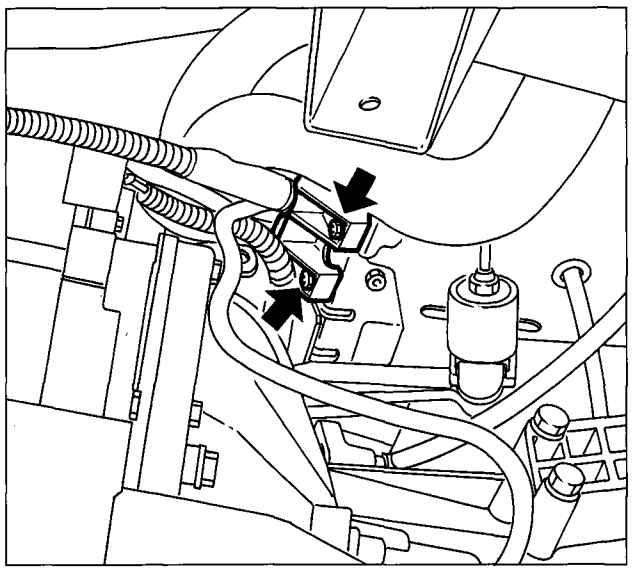

P4F27BJ01

Removing-refitting

Position the vehicle on a lift and unscrew the lower retaining bolts.

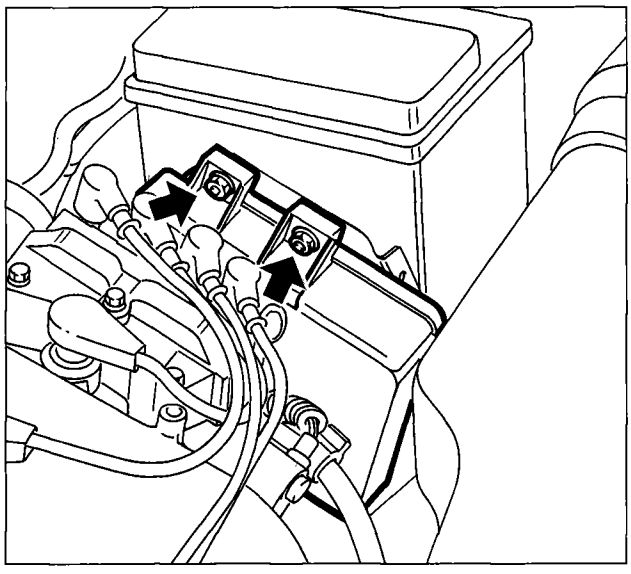

P4F27BJ02

Disconnect electrical connection and the earth connection. Unscrew upper retaining bolts and remove the control unit.

It is absolutely prohibited to exchange injection control units between different vehicles in order to check their efficiency.

Before replacing an ECU as a result of testing, ensure it is really faulty because when a new ECU is activated, the secret Fiat CODE system code is memorised and this makes the unit completely unusable on other vehicles.

Voltages may be present on unconnected pins. These pins must not be connected otherwise the resulting short-circuits could damage the control unit.
Insert and remove the multiple connector with the ignition key out.

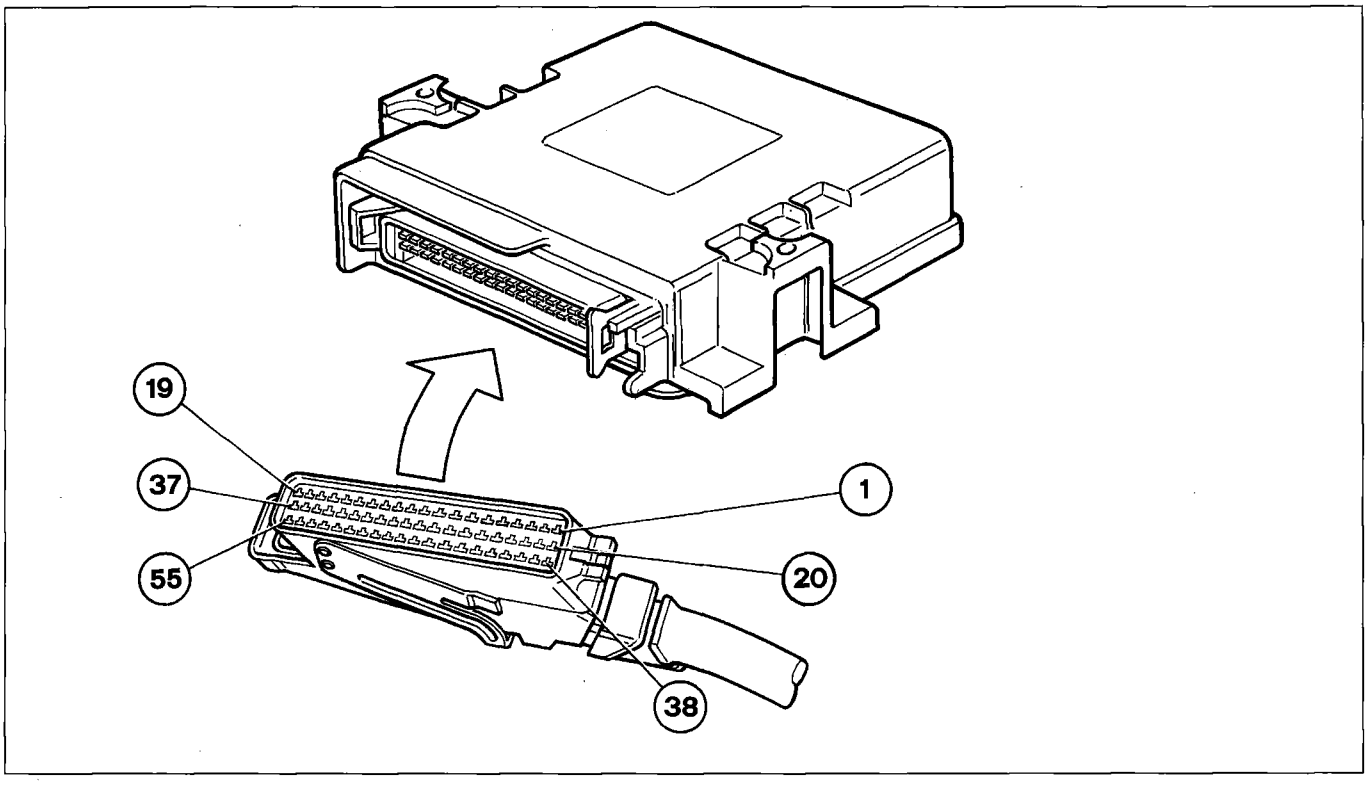

P4F28BJ01

Identifying connections on control unit (pin-out)

1. Cylinder no. 3 injector
2. Cylinder no. 1 injector
3. Engine idle speed actuator (stage 3)
4. Lambda probe earth
5. Automatic transmission ECU (coolant temperature signal)
6. N. C.
7. Dual relay (activate sect. B)
8. N. C.
9. IE system failure warning light.
10. 3-stage pressure switch
11. Timing sensor signal
12. Tester socket (line L)
13. Power source (+15/54)
14. Absolute pressure sensor signal
15. N. C.
16. Throttle valve position and timing sensor power supply
17. Electronic earth
18. N. C.
19. N. C.
20. Engine idle speed actuator (stage 1)
21. Engine idle speed actuator (stage 2)
22. Lambda probe signal
23. Throttle valve position sensor signal
24. Fuel vapour solenoid
25. N. C.
26. Air conditioner compressor
27. N. C.
28. Speedometer signal
29. Intake air temperature sensor
30. Rpm and TDC sensor earth
31. Diagnostic socket (K line)
32. Automatic transmission ECU (transmission ratio change)
33. N. C.
34. Absolute pressure sensor power supply
35. Power source (+30)
36. Earth on engine
37. Ignition coil (cylinders 2-3)
38. Cylinder no. 4 injector
39. Cylinder no. 2 injector
40. Engine idle speed actuator (stage 4)
41. N. C.
42. Rev counter output
43. N. C.
44. Automatic transmission ECU (throttle valve angle)
45. N. C.
46. N. C.
47. Coolant temperature sensor signal
48. FIAT CODE control unit
49. Rpm and TDC sensor signal
50. Automatic transmission ECU (neutral/-drive signal)
51. N. C.
52. Dual relay (activate sect. A)
53. Throttle valve position and timing sensor earth
54. Earth on engine
55. Ignition coils (cylinders 1-4)

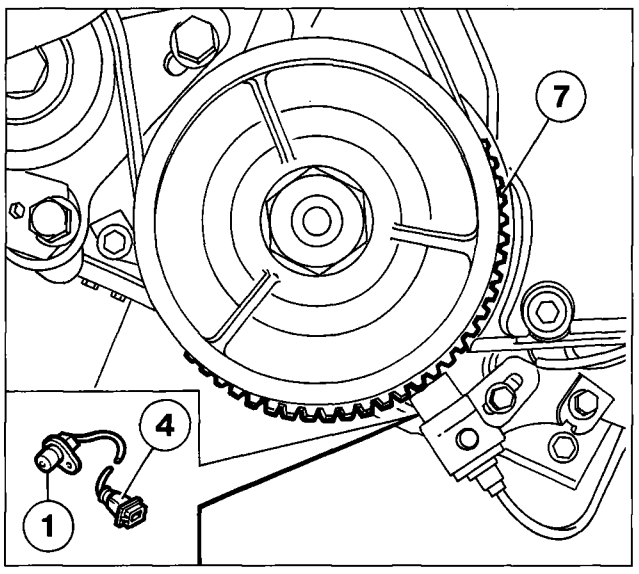

P4F29BJ01

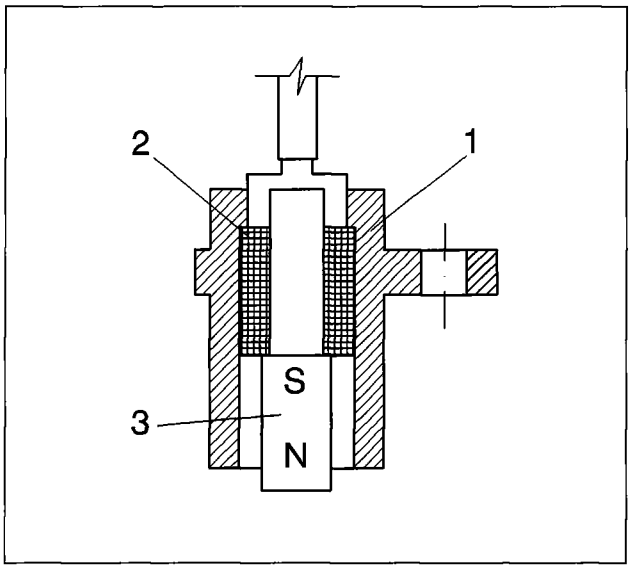

P4F29BJ02

RPM AND TDC SENSOR (Jaeger CVM01)

RPM and crankshaft angular position reference (TDC indicator) sensor (1) is secured to the engine block facing phonic wheel (7) located on the crankshaft pulley.

Principle of operation

The sensor consists of a tubular case containing a permanent magnet (3) and an electrical coil (2).The magnetic flux set up by magnet (3) undergoes fluctuations due to changes in the gap as the teeth pass in front of the phonic wheel.

These magnetic flux changes set up an electromotive force in coil (2). An alternating positive (teeth facing sensor) and negative (gap facing sensor) voltage is set up at coil terminals. The sensor output voltage peak value depends on the gap beteween sensor and phonic wheel teeth if all other factors are equal.

Two of the sixty teeth on the phonic wheel are removed to create a reference gap. Gear pitch therefore corresponds to an angle of 6° (360° divided by 60 teeth). The synchronism point is recognised at the end of the first tooth following the space left by the two missing teeth. When this gap passes beneath the sensor, engine piston pair 1-4 is located at 114° before TDC.

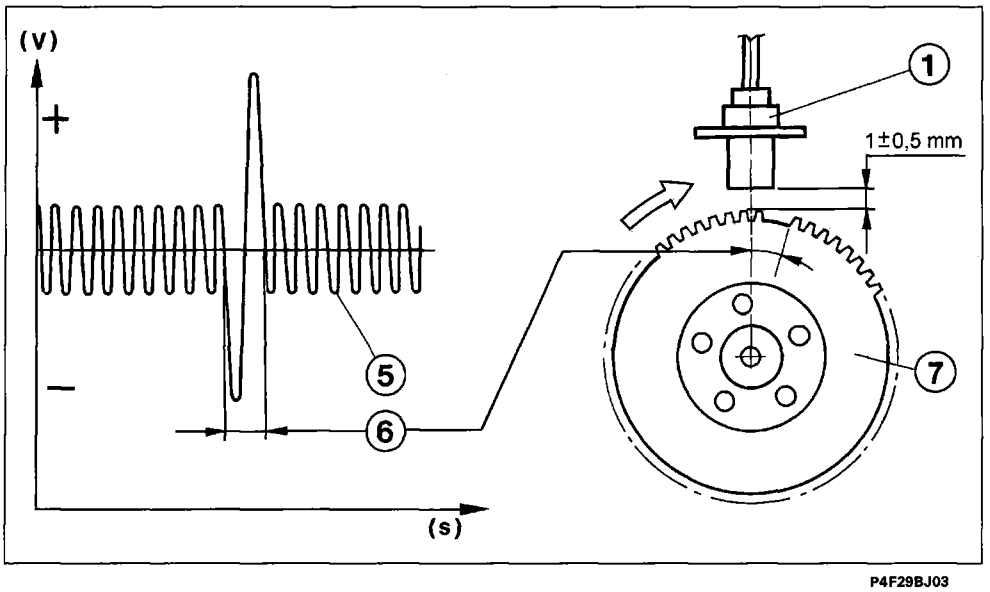

P4F29BJ03

1. Sensor
2. Winding
3. Permanent magnet
4. Sensor connector
5. Output signal
6. Signal corresonding to the two missing teeth
7. Crankshaft pulley with phonic wheel

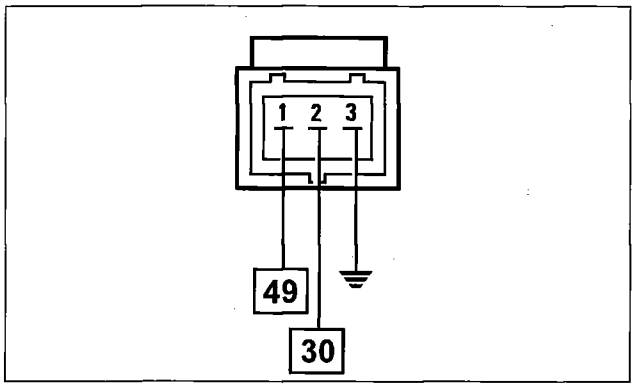

P4F30BJ01

Wiring connector

The sensor is connected to the ECU (pin 30 and 49) by means of twisted wires covered by a shielded, interference-proof sheath connected to earth.

NOTE *The numbers in boxes indicate the corresponding control unit pins.*

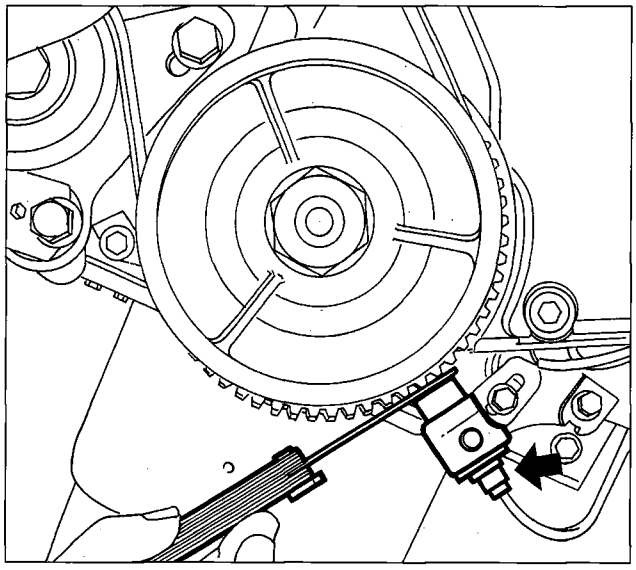

P4F30BJ02

Removing-refitting

Disconnect electrical connection.

Unscrew the screw indicated and remove the sensor.

Checking gap

Check gap between sensor and phonic wheel teeth.

Gap: 0.5 - 1.5 mm

NOTE *Whenever repairs to the rpm and TDC sensor mount are necessary (e.g. gap not as specified, sensor not aligned etc.), the sensor must be positioned and aligned with the mount as described in the engine service manual (publication no. 504.589/20).*

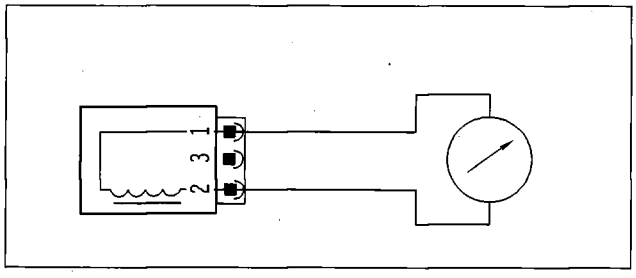

P4F30BJ03

Checking resistance

Sensor resistance may be measured by disconnecting the connector and connecting an ohmmeter to the sensor terminals.

Resistance 575 - 750 ohm at 20 °C

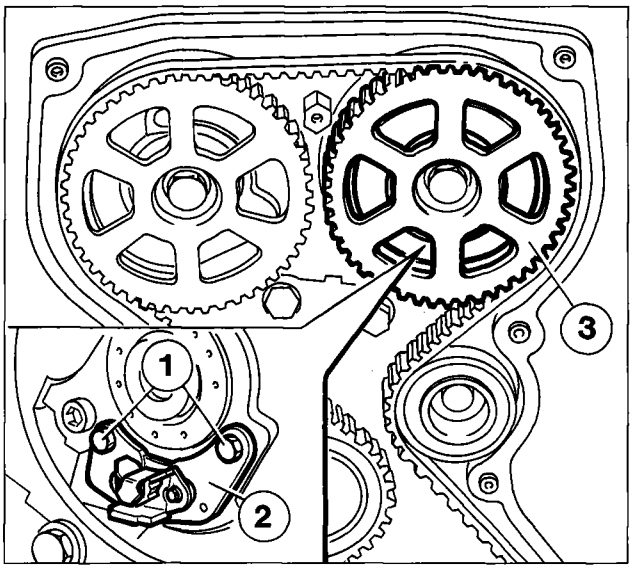

P4F31BJ01

NOTE *Sensor angular position may not be adjusted in any way.*

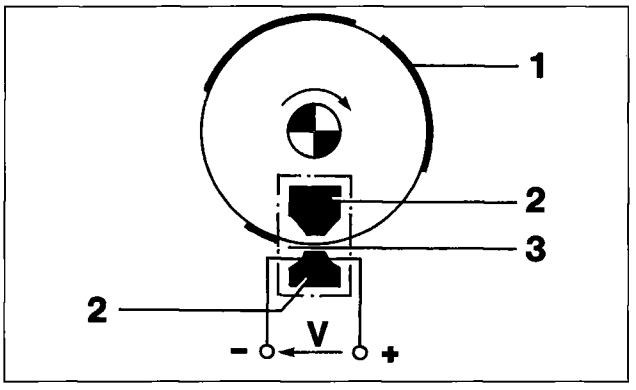

P4F31BJ02

1. Deflector
2. Magnetic material
3. Gap

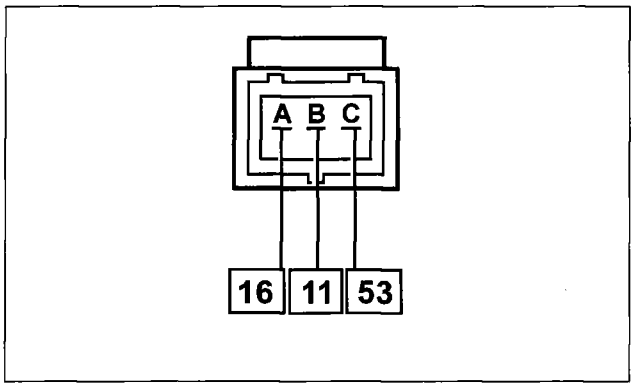

P4F31BJ03

Wiring connector

The numbers in boxes indicate the corresponding control unit pins

TIMING SENSOR (Jaeger SFA 200)

This system adopts a phased, sequential injection system. In other words, fuel is injected into each cylinder in sequence during the intake phase.
To achieve this, the ECU uses a timing signal together with the rpm and TDC signal to determine the point of injection.
The signal sent to the control unit is generated by a Hall sensor (2) fitted on the intake camshaft pulley.

Principle of operation

A semi-conducting layer with current flowing through it is placed in a normal magnetic field (force lines at right angles to current direction). A potential difference known as a HALL voltage is set up at its terminals.

If current intensity remains constant, the voltage generated depends solely on the intensity of the magnetic field; magnetic field intensity need therefore only vary periodically to set up a modulated electrical signal with frequency proportional to the speed with which the magnetic field changes.

To achieve this change, the sensor is crossed by a metal ring (internal part of pulley) with an opening. The moving metal part of the ring covers the sensor and blocks the magnetic field to produce a low output signal. The sensor generates a high signal when aligned with the opening, i.e. with magnetic field present.
The alternation of signals is therefore dependent on the succession of openings (see chapter on "signal management").

Removing-refitting

To gain access to the timing sensor, remove the intake side camshaft pulley (3) (refer to engine service manual, publication no. 504.589/20).

Disconnect electrical connection of sensor.

Unscrew both screws (1) and remove timing sensor (2) with retaining plate.

BUTTERFLY VALVE CASE (54 CFA 26)

The butterfly valve case is responsible for metering the quantity of air supplied to the engine (and thus controlling engine power output) according to accelerator position determined by the driver.

The butterfly valve case is fastened to the intake manifold by four screws. The throttle is opened by a linkage with configuration designed to open the throttle by a small amount when the pedal is hardly pressed (provided pedal travel remains the same) and open it by large amounts when the pedal is pressed down further.

With the pedal fully released (engine in over-run or idling), the additional air required is supplied by an engine idle adjustment solenoid. Under these conditions, the throttle opening lever comes into contact with an anti-bind screw, which prevents the throttle becoming locked in closed position.

To prevent the build-up of ice around the throttle and the hole leading to the PCV valve, the butterfly valve case is heated by directing a small amount of coolant from the engine thermostat around a chamber inside the case.

The oil vapour recirculation system PCV valve and throttle position sensor are also fitted on the butterfly valve case.

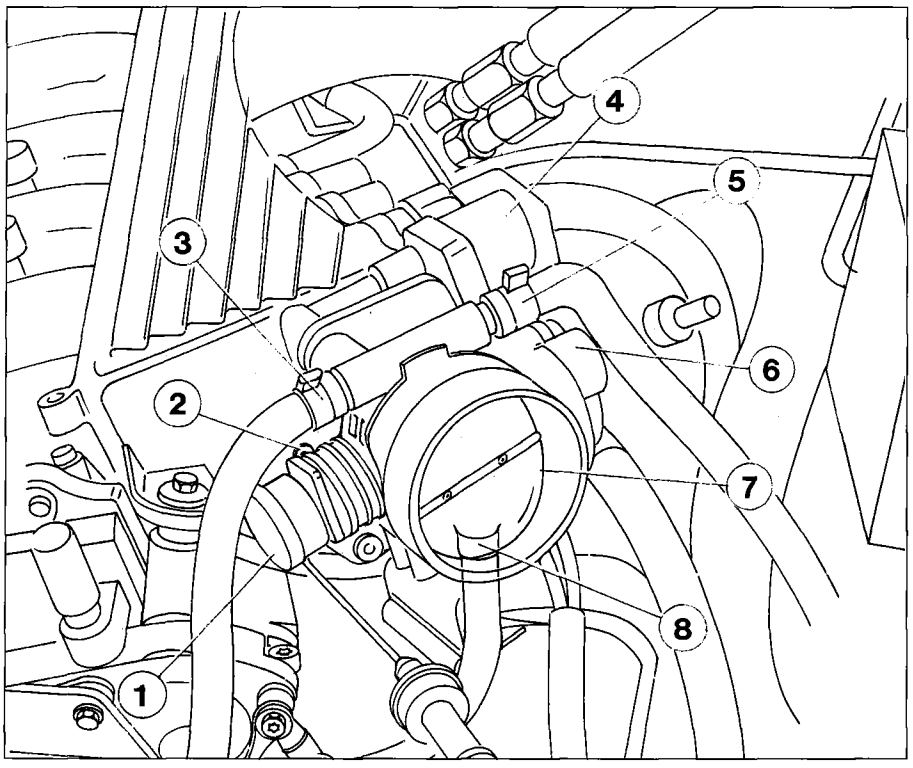

P4F32BJ01

The anti-bind screw is set by flushing in the factory and should never be tampered with.

1. Throttle linkage
2. Butterfly valve adjustment and antibind screw (do not touch)
3. Attachment for engine coolant delivery hose
4. Engine idle speed actuator (fitted on intake manifold)
5. Attachment for engine coolant return hose
6. Throttle position sensor
7. Throttle valve
8. Attachment for engine block vapour recirculation and recovery line

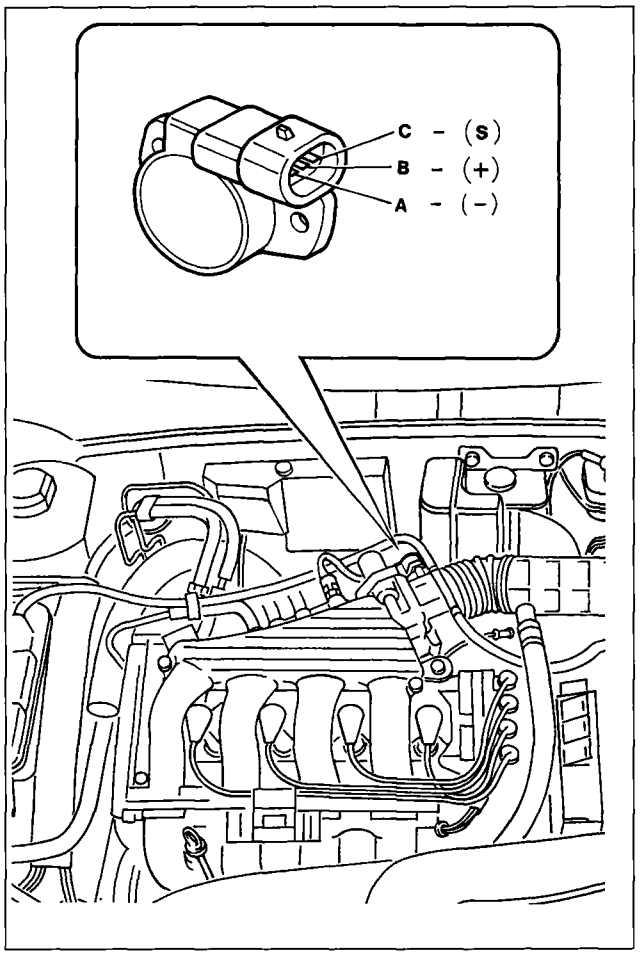

P4F33BJ01

The following graph indicates the voltage level supplied by the sensor as a function of throttle opening angle.

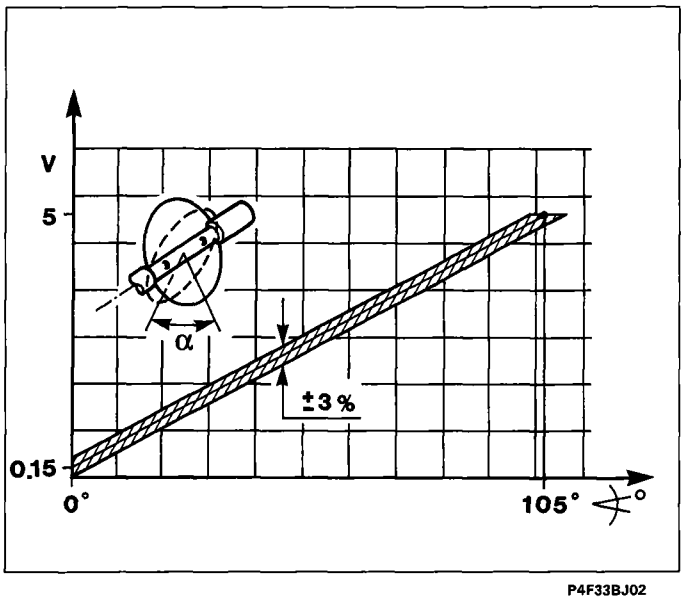

P4F33BJ02

THROTTLE VALVE POSITION SENSOR (M. Marelli PF-1C)

This takes the form of a potentiometer whose mobile part is controlled by the butterfly valve spindle.

The potentiometer is fitted inside a plastic container equipped with two tabs containing two UNSLOTTED holes. These anchor the sensor and ensure it is positioned correctly in relation to the throttle valve. A three-pin socket (ABC) on the container provides an electrical connection with the injection-ignition ECU.

During operation, the ECU supplies the potentiometer at a voltage of 5 Volt. The parameter measured is throttle position from idle to full opening for injection control management.

The ECU recognises throttle valve opening status on the basis of outlet voltage and corrects mixture concentration accordingly.
The ECU recognises throttle valve opening status on the basis of outlet voltage and corrects mixture concentration accordingly.

The potentiometer is single-ramp: its main specifications are as follows:

Effective electrical angle: 90° ± 2°

Total mechanical travel: 110° ± 8°

Temperature service range: –30°C - +125°C

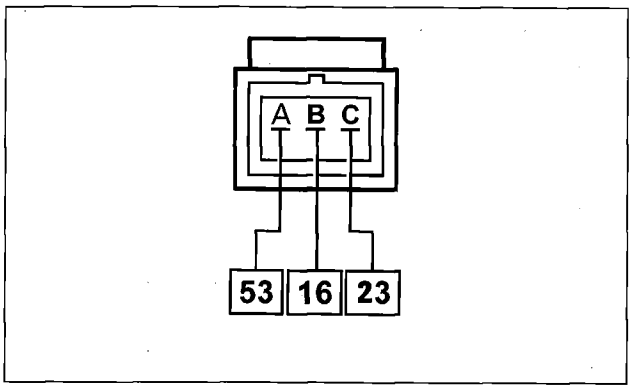

P4F34BJ01

Wiring connector

The numbers in boxes indicate the corresponding control unit pins.

Checking resistance

Sensor resistance may be measured by connecting an ohmmeter across sensor pins A and C

Resistance: 0 - 1200 ohm ± 20% at 23 °C

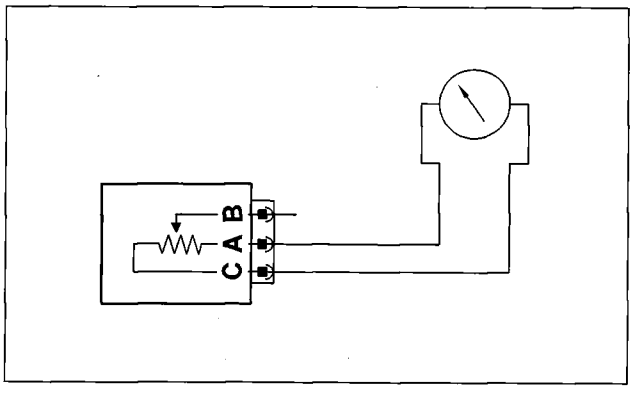

P4F34BJ02

Recovery

A value calculated on the basis of intake manifold pressure is adopted. If the pressure sensor fails at the same time, a throttle angle of about 50° is assumed as a fixed value.

The strategy of gradual decrease of rpm at idle speed (dashpot) is blocked.

Idle self-adaptation is blocked.

Mixture concentration self-adaptation is blocked.

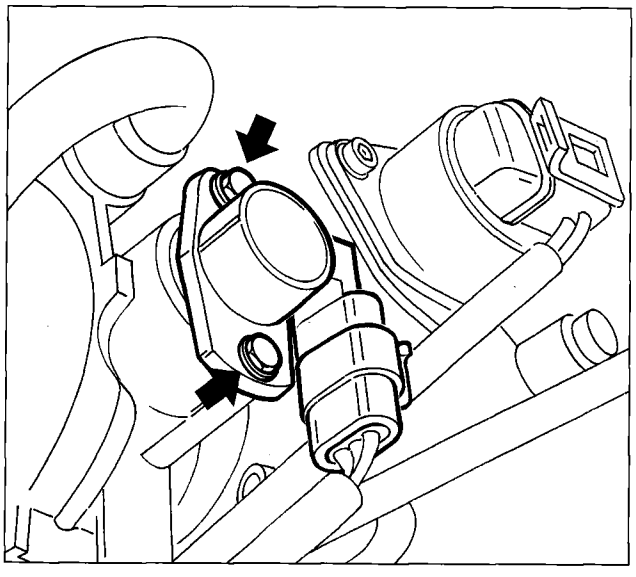

P4F34BJ03

Removing-refitting

Unscrew both retaining bolts and remove the sensor.

NOTE *The potentiometer is fitted to the butterfly valve case by two tabs containing two unslotted holes. No angular position adjustment is therefore necessary because the ECU employs self-adaptive algorithms to detect whether the throttle is fully closed or fully open.*

NOTE *Fit new potentiometer retaining bolts whenever bolt removal is required because the thread is covered by a light coat of loctyte and this ensures a seal once only.*

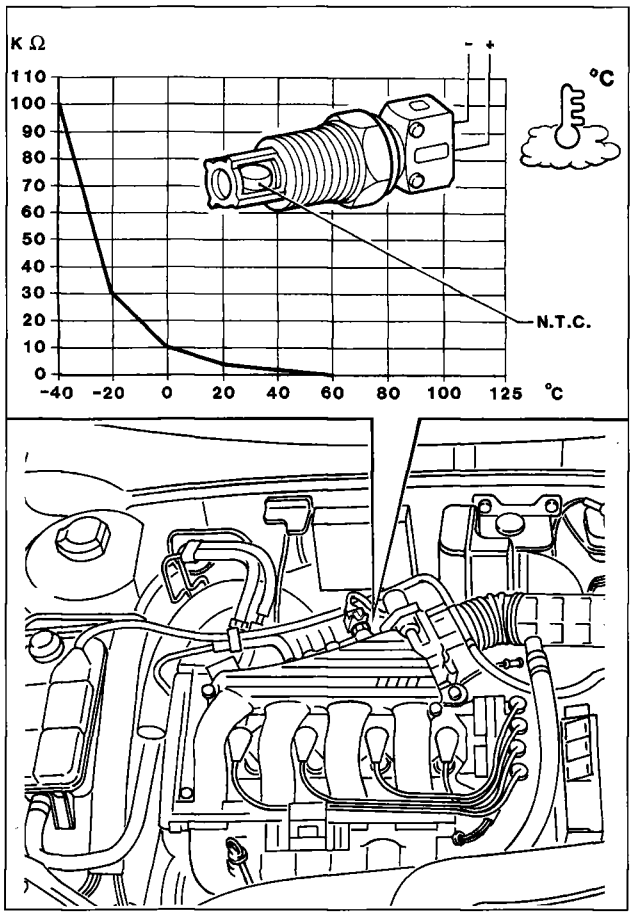

P4F35BJ01

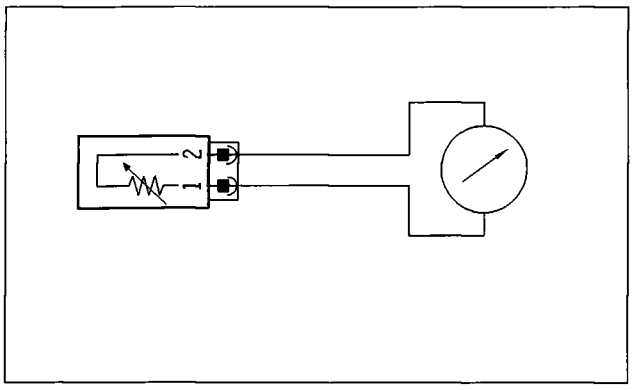

P4F35BJ02

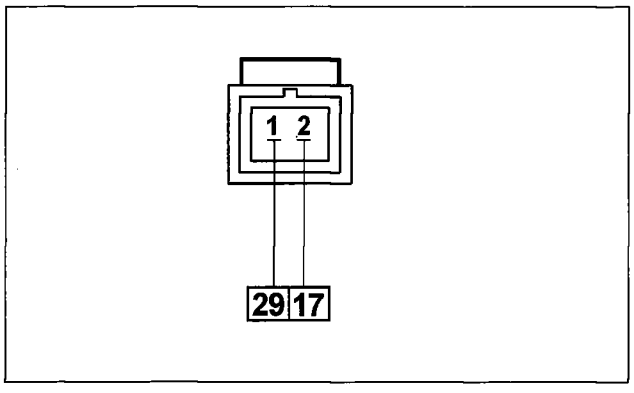

P4F35BJ03

INTAKE AIR TEMPERATURE SENSOR (Jaeger ATS-04)

The sensor is fitted to the intake duct.

It consists of a brass case from which emerges a plastic case that acts as protection for the actual resistance element. This takes the form of an NTC (negative temperature coefficient) thermistor. In practice, sensor electrical resistance drops as temperature rises.

According to manifold intake air temperature, the NTC thermistor alters its ohmmic resistance as shown in the graph in the figure.

The reference voltage is 5V; since this circuit is designed as a voltage divider, the voltage is distributed between a resistance present in the ECU and the sensor N.T.C. resistance. The ECU is therefore able at any moment to assess sensor resistance changes through voltage changes and thus obtain information on intake air temperature.

The ECU uses this information and information on absolute pressure to establish «AIR DENSITY», which is an essential item of information for calculating the amount of air taken in by the engine. The computer uses this information in turn to calculate injection time, i.e. the exact amount of fuel to be delivered.

Checking resistance

The graph shows changles in resistance levels. These may be measured by connecting an ohmmeter at the sensor terminals.

Removing-refitting

Disconnect electrical connection and remove the sensor screwed into the intake duct.

Tightening torque: 2.4 daNm

Recovery

Air T assumed = 54°C.

Self-adaption inhibited during idling.

Wiring connector

The numbers in boxes indicate the corresponding control unit pins.

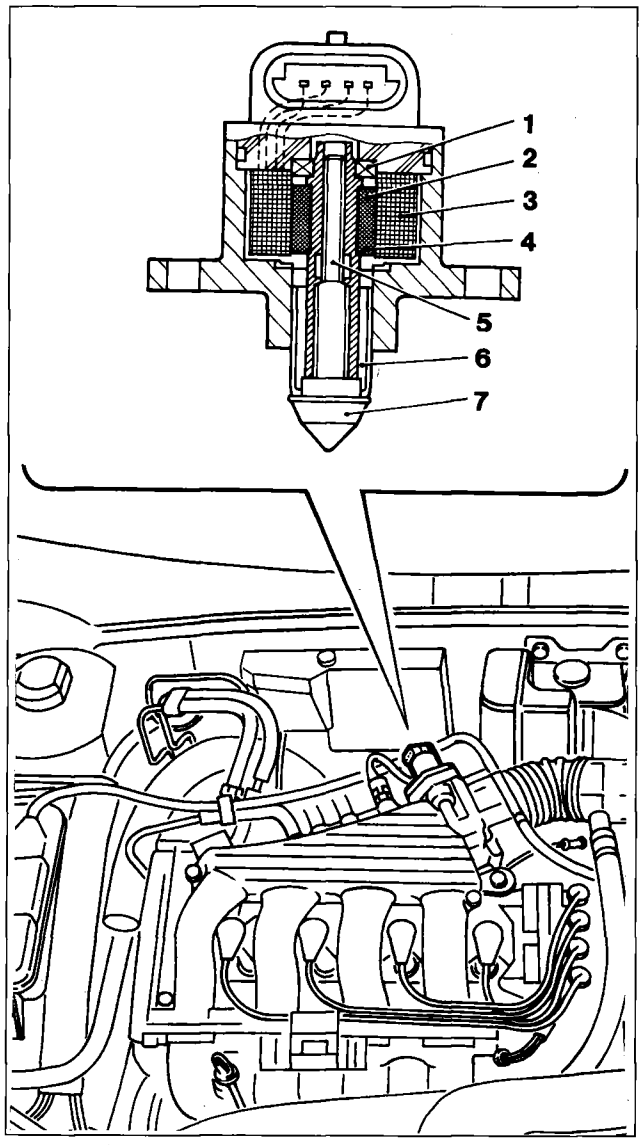

P4F36BJ01

ENGINE IDLE SPEED ACTUATOR (step motor) (Weber B02)

1. Bearing
2. Lead screw
3. Coils
4. Magnets
5. Screw
6. Anti-rotation grooves
7. Plunger

The actuator is fitted to the butterfly valve case and consists of:

- An electric step motor with two windings in the stator and a rotor that contains a certain number of permanent magnet pairs.
- A worm and screw reduction unit that converts rotatory motion into linear motion.

In order to idle, i.e. with throttle (4) fully closed, the engine needs a certain amount of air (Qo) and fuel to overcome internal friction and maintain rpm levels.
To the quantity of air Qo that leaks through the closed butterfly valve (4) during idling, an additional quantity of air Q must be added to allow the engine to maintain rpm levels constant, particularly during warm up and when electrical users or external loads are activated (air conditioner, automatic transmission, etc).
To achieve this result, the system uses a step motor (1) fastened to butterfly valve case (5) controlled by ECU (6) which moves a rod fitted with a plunger (3) during operation. This alters the cross-section of by-pass duct (2) and thus the amount of air (Qo + Q) taken in by the engine.
In order to govern this type of action, the ECU uses angular engine speed and coolant temperature input from the relevant sensors.

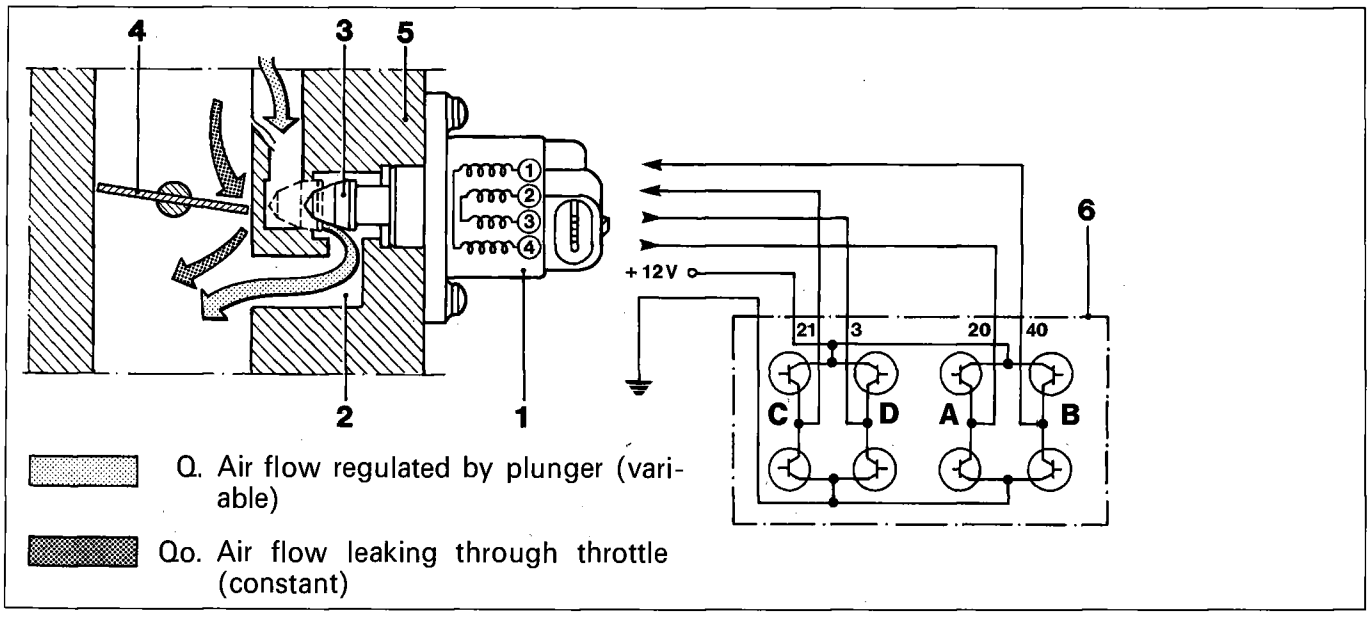

P4F36BJ02

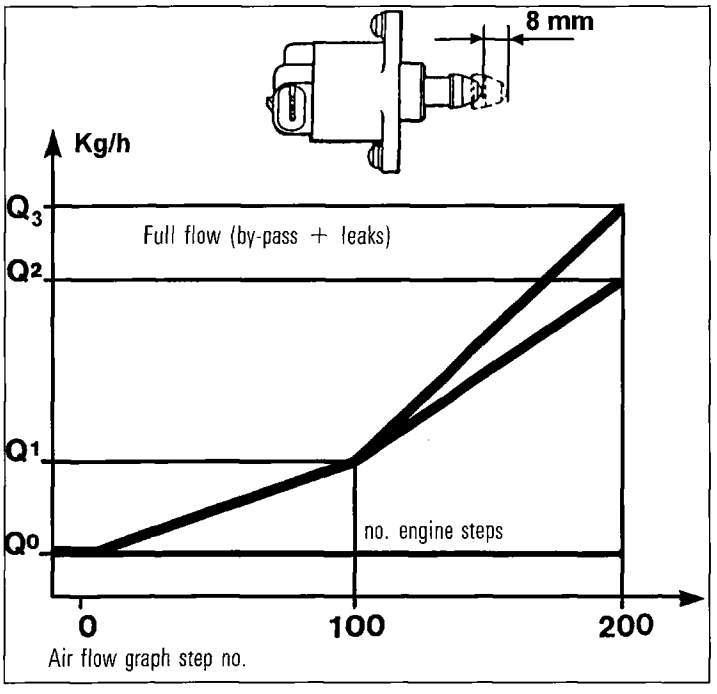

P4F37BJ01

The electric step motor features extremely high accuracy and resolution (about 20 rpm). Pulses sent from the ECU to the engine are converted from rotary motion into straight-line motion (about 0.04 mm/step) through a worm and screw mechanism. This operates a plunger which in turn moves to alter the by-pass duct cross--section.

The constant idle air flow Qo arises as a result of leakage through the butterfly valve. This is regulated during production and protected by a cap. Maximum flow Q2 arises when the plunger is fully retracted (about 200steps corresponding to 8 mm). Between these two levels, air flow follows the graph shown alongside.

Plunger diameter is 12 mm on the version with automatic transmission (instead of 10 mm on the version with manual gearbox) in order to ensure a bigger air flow (Q3), particularly during cold operation.

Motor strategy

The number of working steps is dependent upon engine conditions:

- Start-up stage
  When the key is inserted, the ECU controls step motor position according to engine coolant temperature and battery voltage.
- Warming-up stage
  Rpm levels are corrected according to engine coolan temperature.
- With engine warm:
  Idle control is dependent on a signal from the rpm sensor. When external users are activated, the ECU governs sustained idle.
- Over-run:
  The ECU recognises over-run status from the throttle potentiometer position.
  It controls step motor position by means of the idle flow law (DASH-POT laws). In other words, it slows the return of pluger (3) to its seat so that a quantity of air by-passing hole (2) reaches the engine and reduces levels of pollutants in the exhaust gas.

Recovery

Actuator operation disenabled and self-adaption of idling fuel mixture level blocked.

Removing-refitting engine idle control actuator (step motor)

- disconnect battery negative terminal;
- unscrew both retaining screws and withdraw the actuator;
- check condition of thoroid seal and remove any impurities from the case seat;
- refit the actuator, checking that the plunger fits easily without forcing. To do this, fit the actuator and replace screws but do not tighten. Operate the step motor using a Fiat-Lancia/Tester until it has moved through its entire travel. Tighten screws only after checking plunger is correctly aligned in its seat and electrical connector is positioned correctly.

NOTE *It is advisable to leave the battery negative terminal disconnected for about 20 minutes. Provided the above procedure is carried out as described, the ECU will position the idle speed actuator correctly the first time the engine is started up.*
Fit new step motor retaining bolts whenever the bolts are loosened or removed because the threads are covered with a light layer of loctyte, which guaranteeds a seal only once.

Tightening torque of step motor screws 0.36 - 0.44 da Nm.

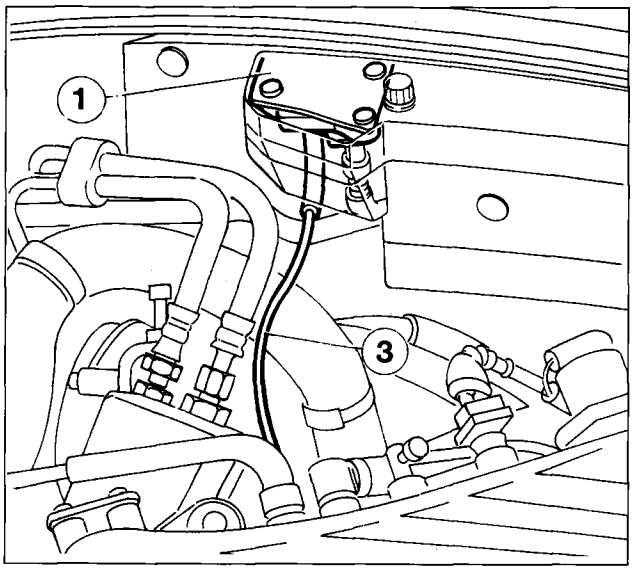

P4F38BJ01

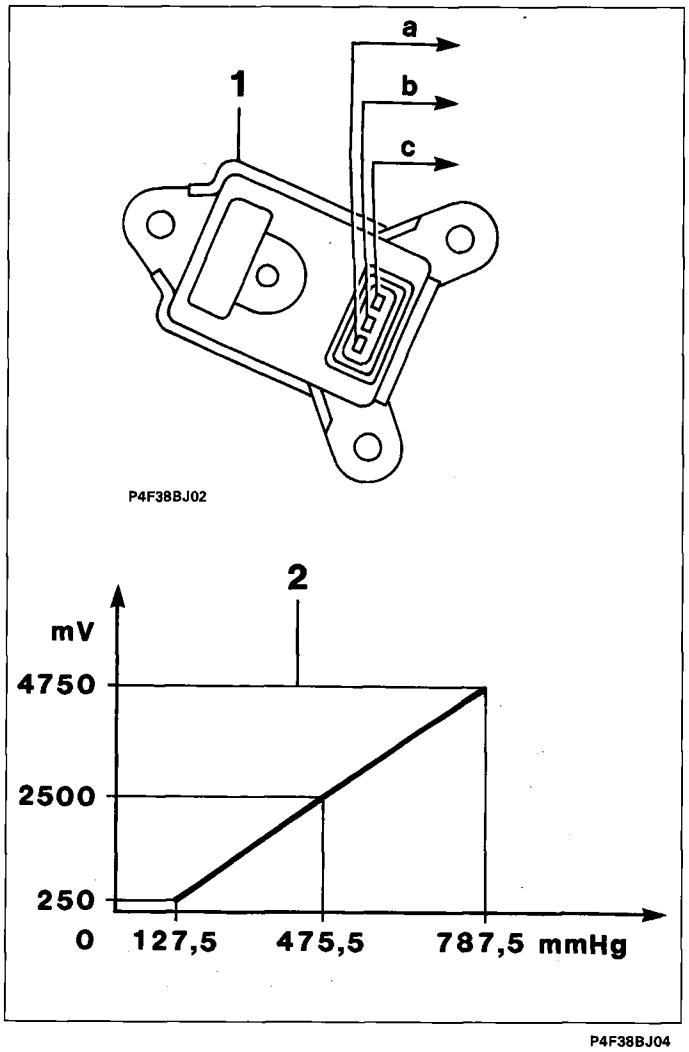

P4F38BJ02

P4F38BJ04

Wiring connector

The numbers in boxes indicate the corresponding control unit pins

ABSOLUTE PRESSURE SENSOR (Weber PRT 03)

The sensitive element is enclosed within a plastic container (1) and consists of a Wheatstone bridge screen printed to a very fine circular ceramic plate (diaphragm) fitted to the underside of a ring mount.

The diaphragm separates two chambers: a vacuum is set up in the bottom sealed chamber while the top chamber communicates with the intake manifold indirectly through a rubber pipe (3).

When the engine is off, the diaphragm bends according to atmospheric pressure level. Exact information on altitude is therefore provided when the key is inserted.

When running, the engine sets up a vacuum that gives rise to a mechanical effect on the sensor diaphragm, which bends to alter the resistance level.

Because the electrical supply is maintained constant (5 V) by the control unit, when the resistance is altered, the output voltage changes in proportion to the vacuum in the intake manifold (2).

Recovery

The pressure is calculated according to throttle angle and rpm level.
If the butterfly valve position sensor is faulty, a fixed calibration value is assigned (about 630 millibars).
Mixture self-adaption is inhibited.
Lambda probe test is inhibited.

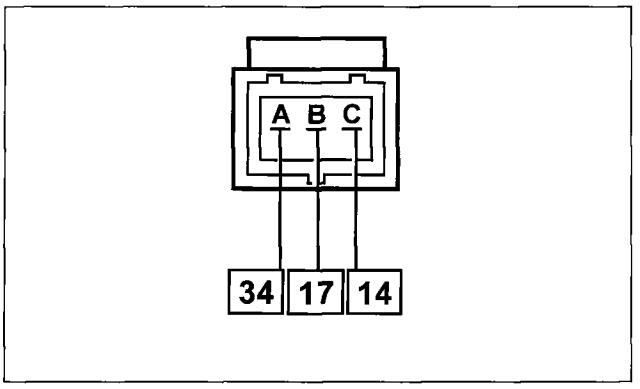

P4F38BJ03

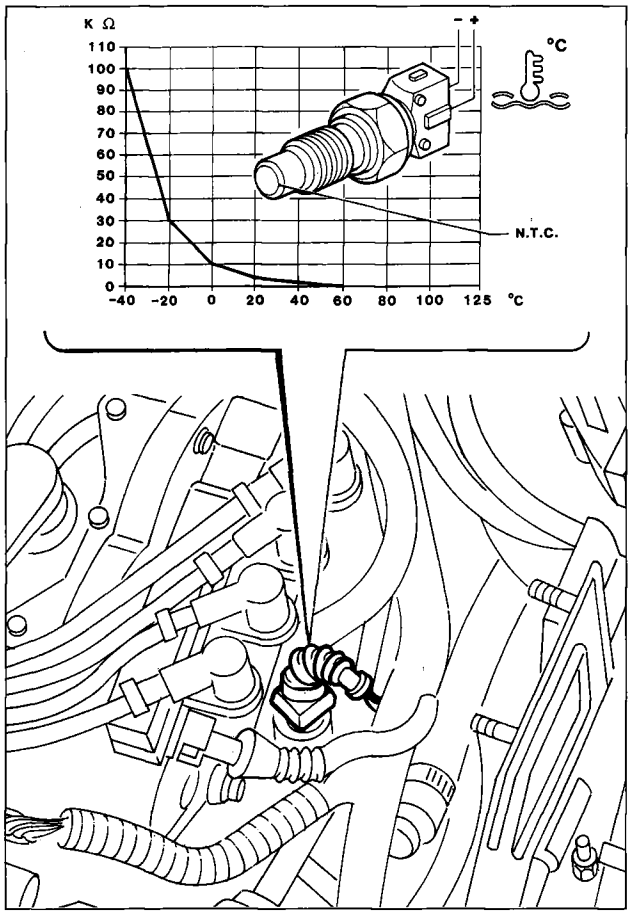

P4F39BJ01

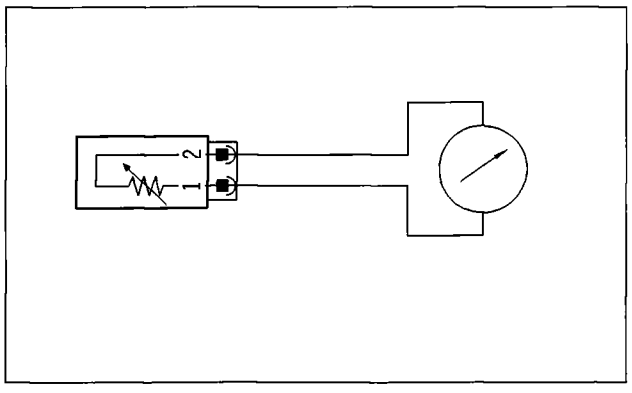

P4F35BJ02

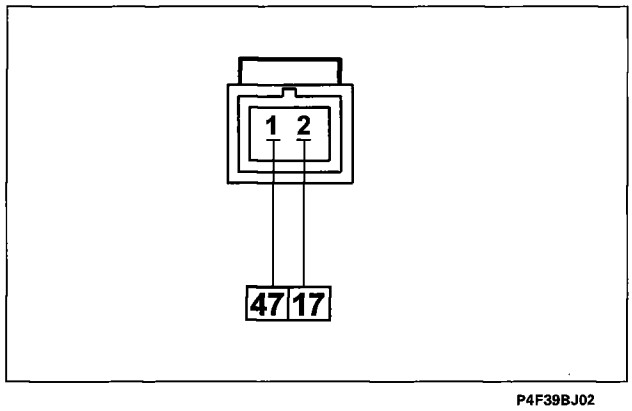

P4F39BJ02

COOLANT TEMPERATURE SENSOR (Jaeger 401930.01)

The sensor is fitted to the thermostat case. It consists of a brass case, which protects the actual resistance element: an NTC thermistor (standing for Negative Temperature Coefficient because sensor electrical resistance decreases in inverse proportion to temperature).

The reference voltage is 5V; since this circuit is designed as a voltage divider, the voltage is distributed between a resistance present in the ECU and the sensor N.T.C. resistance. The ECU is therefore able at any moment to assess sensor resistance changes through voltage changes and thus obtain information on intake air temperature.

Recovery

The last reading is adopted. If the temperature does not correspond to steady state levels, this is gradually increased with time following start-up and corrected on the basis of intake air temperature.

Mixture concentration self-adaption is inhibited.

Idle self-adaption is inhibited.

Checking resistance

The graph plots sensor resistance values. These may be measured by disconnecting the connector and connecting an ohmmeter to the sensor terminals.

Removing-refitting

Disconnect electrical connection and remove the sensor

Before refitting apply MR/B anaerobic sealant to the tapered threads.

Tightening torque 2.4 daNm.

Wiring connector

The numbers in boxes indicate the corresponding control unit pins

ELECTRIC FUEL PUMP (Walbro-Marwal MSS071)

The pump is housed inside the fuel tank in a holder, together with the fuel level indicator. It is fitted with a mesh filter on the pump intake.

The pump is volumetric type and designed to work with unleaded fuel.The rotor is turned by an electric d.c. motor supplied at battery voltage directly through the dual relay, controlled in turn by the ECU.

The motor is submerged in the fuel in order to clean and cool the brushes and commutator.

The pump is fitted with a pressure relief valve, which short-circuits delivery to intake if inlet circuit pressure exceeds 5 bar. This prevents the electric motor overheating.

A check valve fitted in the delivery line prevents the entire fuel circuit emptying when the pump is not working.

Rated pump output varies according to angular rotor speed and hence supply voltage: it is about 140 l/h at a voltage of 12 V.

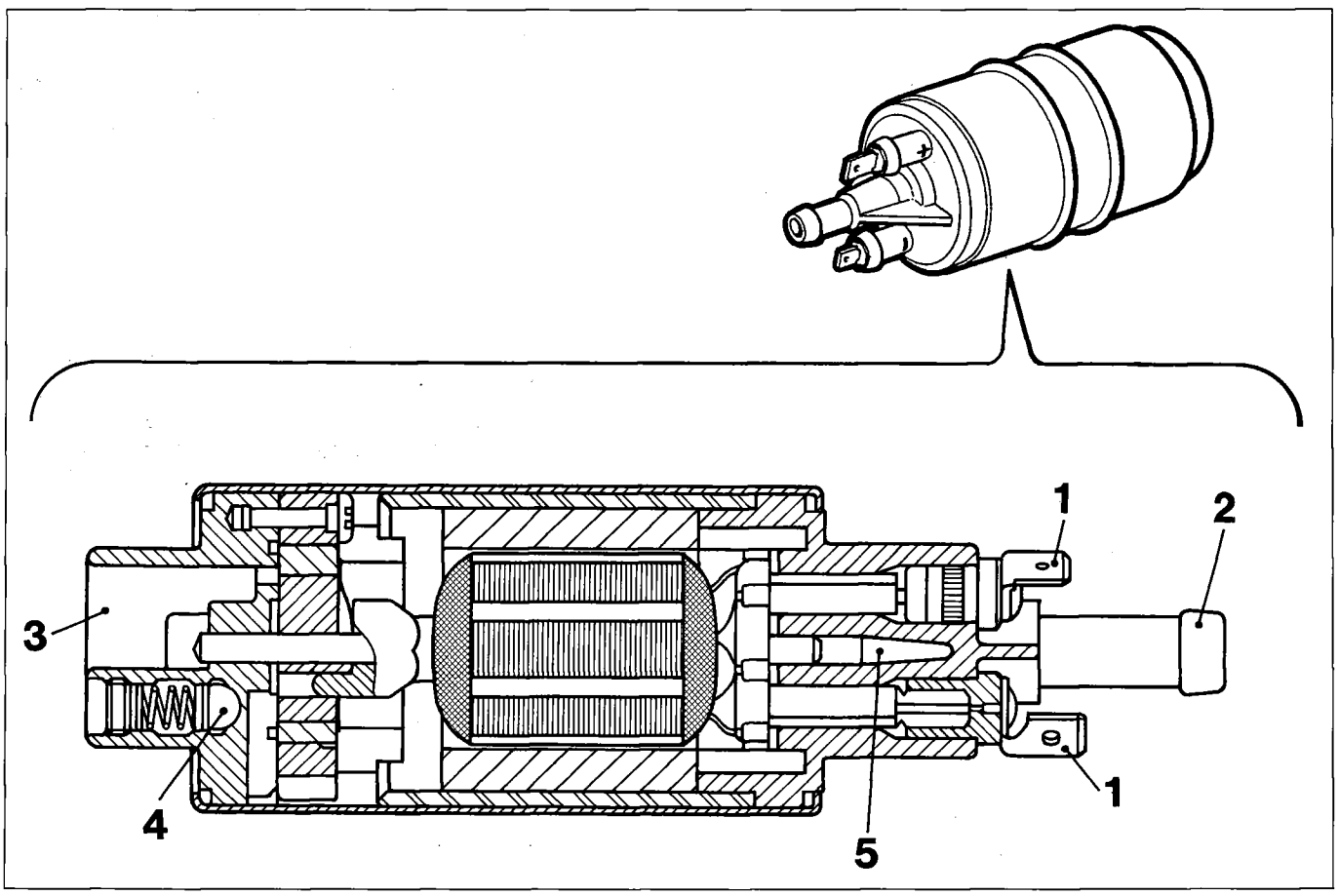

P4F40BJ01

1. Electrical connectors
2. Delivery port
3. Inlet port
4. Pressure relief valve
5. Check valve

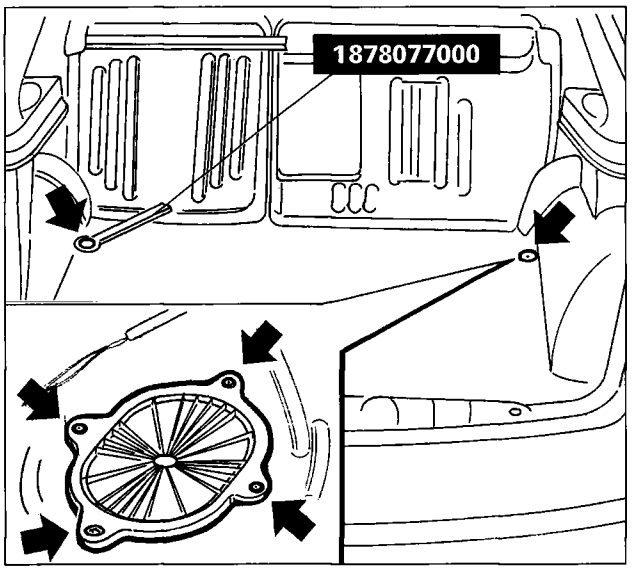

P4F41BJ01

Removing-refitting electric fuel pump

The pump is located in the tank: proceed as follows to remove:

Undo retaining studs indicated using tool 1878077000.

Lift load compartment mat.

Remove dust cover.

Disconnect electrical connections from pump and from fuel level sending unit.

Disconnect fuel lines (inlet, outlet and breather).

Unscrew lock-ring retaining pump to tank using tool 1860893000 and a box wrench.

Remove fuel pump assembly.

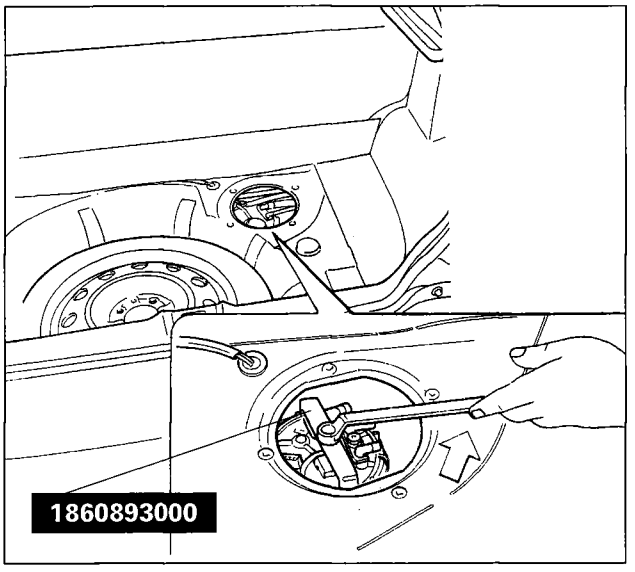

P4F41BJ02

When refitting, electrical connections and fuel lines cannot be fitted the wrong way round because the respective terminals are of different diameter.

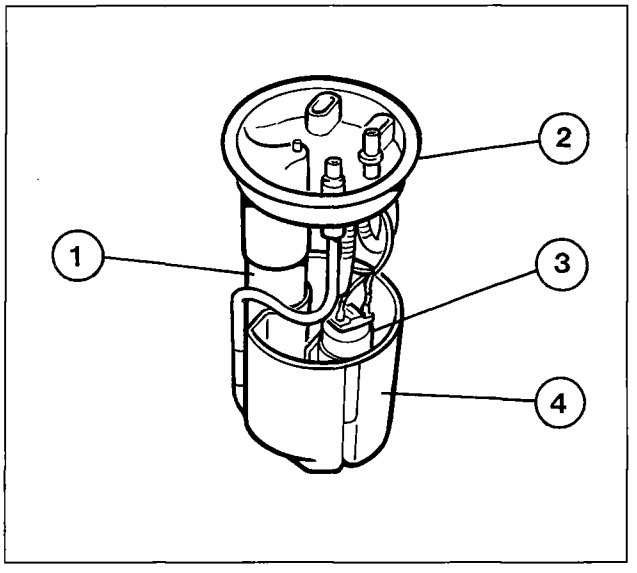

P4F41BJ03

Components of fuel pump assembly

1. Fuel level gauge
2. Retaining plate
3. Electric pump
4. Reservoir with mesh prefilter

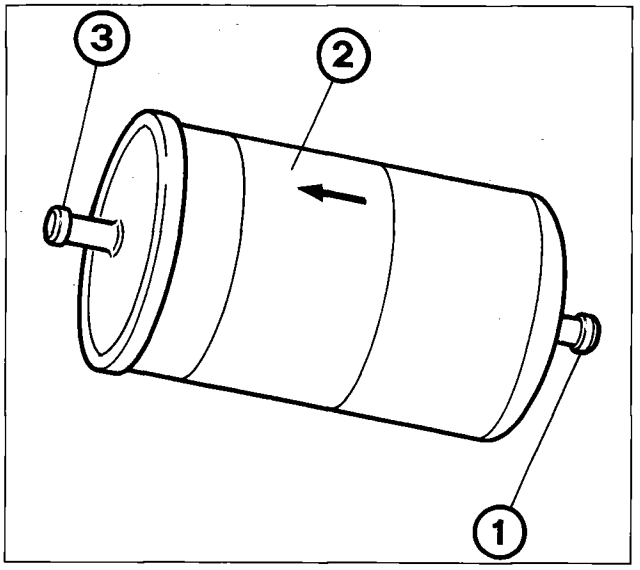

P4F42BJ01

FUEL FILTER
(Bosch A 450.024.262)

The filter is fitted along the fuel delivery line: it consists of a sheet steel case and an inner polyurethane mount about which is wound an element with high filtering capacity.

NOTE *An arrow on the outside case indicates the direction of fuel flow and thus the correct fitting direction.*

1. Fuel intake
2. Arrow position
3. Fuel outlet

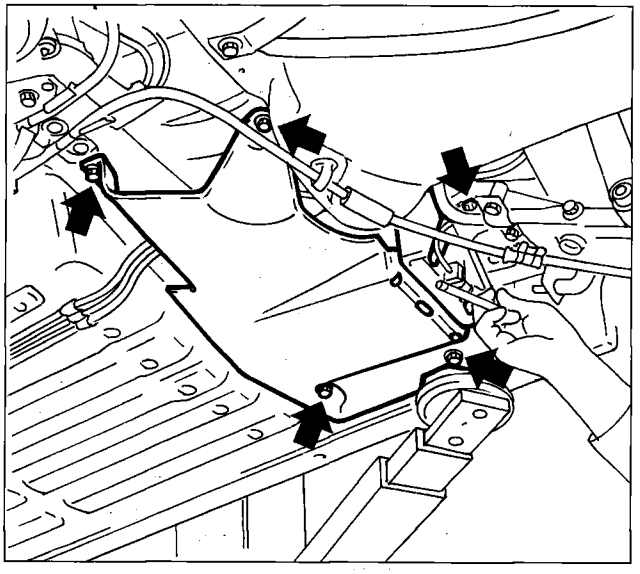
P4F42BJ02

Removing-refitting

Proceed as follows to remove the fuel filter:

Lift the vehicle.

Unscrew the bolts indicated and remove the protective cover.

Disconnect the quick release fuel inlet and outlet fittings from the filter and collect fuel emerging during the operation in a suitable container.

Unscrew screw retaining and remove the filter.

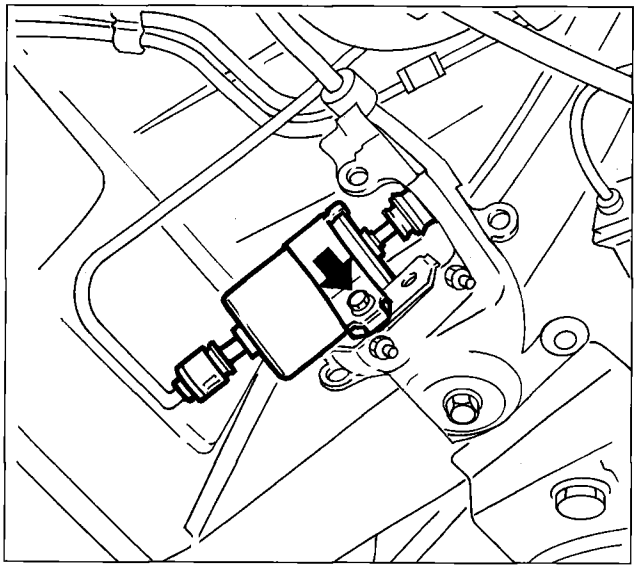
P4F42BJ03

The fuel filter must be replaced at intervals of 30000 km.
After changing the filter, start the engine and check that no fuel is lost from the fittings.

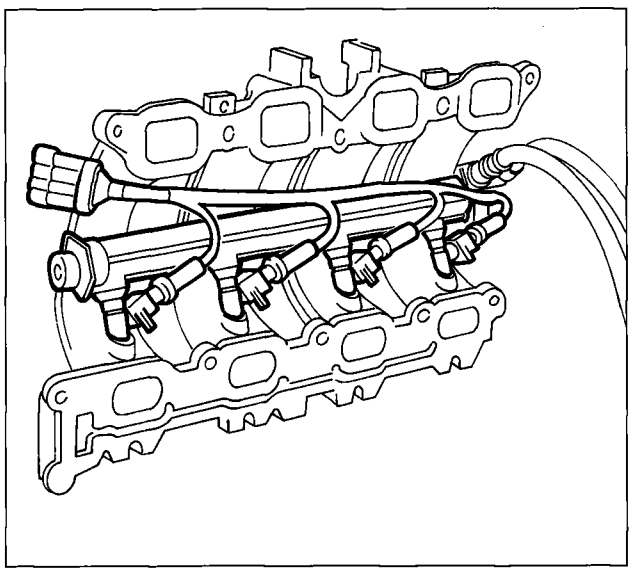

P4F43BJ01

FUEL MANIFOLD (CB 104)

The fuel manifold is fastened to the inside part of the intake manifold and its function is to send fuel to the injectors.

It is pressure cast in aluminium and incorporates housings for injectors and pressure regulator.

The fuel intake is secured with bolts with tapered seals.

Fuel recirculation is via a pipe inside the manifold and connected to one end of the regulator and the opposite end of the outer fuel return line.

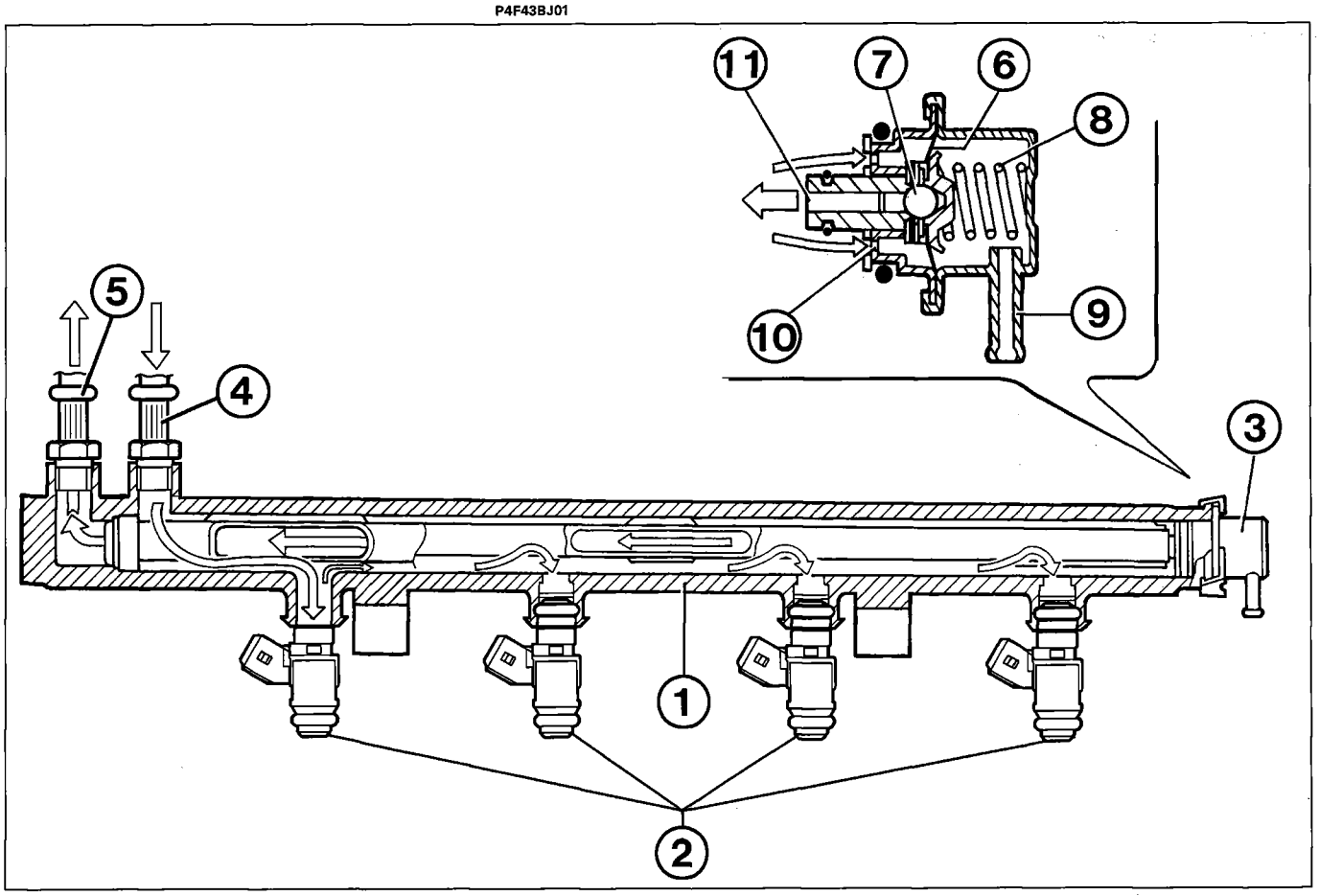

P4F43BJ02

1. Fuel manifold
2. Injectors
3. Pressure regulator
4. Fuel inlet fitting
5. Fuel return fitting to tank
6. Membrane
7. Runoff valve
8. Regulating spring
9. Vacuum socket
10. Fuel inlet
11. Fuel return

FUEL PRESSURE REGULATOR (M. Marelli RPM 40)

This differential diaphragm device is set to a pressure of 3.00 ± 0.05 bar in the factory.

Pressurised fuel from the pump exercises thrust on reflux valve (7) countered by calibrated spring (8). When pressure setting is exceeded, reflux valve opens and excess fuel returns to the tank in order to stabilise pressure in the circuit. The vacuum in the intake manifold (acting also on injector nozzle) acts on regulator diaphragm through intake (9) in order to reduce the load on the calibration spring.

The pressure differential between the fuel and the injector's surroundings (intake manifold) is therefore maintained constant under all engine service conditions. The injector flow (for a given supply voltage) thus depends solely on injection time established by the ECU.

NOTE *The ECU assumes pressure as a fixed parameter. The regulator should never therefore be tampered with; otherwise the mixture concentration specified for the engine will be altered.*

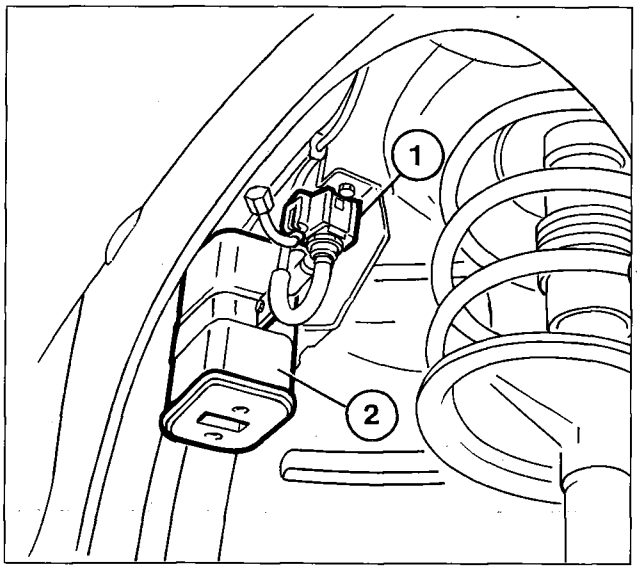

P4F44BJ01

CARBON FILTER AND FUEL VAPOUR CUT-OFF VALVE

These components form part of the fuel evaporation control and vapour recovery system. They are located in the right wheel arch compartment and can be reached by removing the rear part of the right front wheel arch compartment trim.

1. Fuel vapour cut-off solenoid

2. Carbon filter

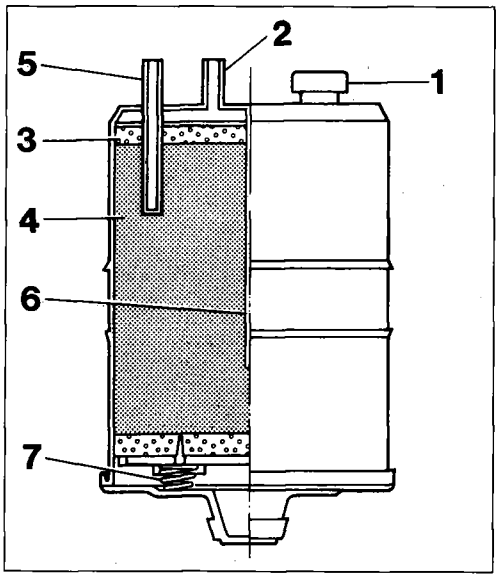

P4F44BJ02

Carbon filter

This consists of carbon granules (4) that trap fuel vapour entering intake (5).

Warm flushing air enters intake (1), through paper filter (3) and flows over the carbon granules to remove fuel vapours and carry them toward the outlet (2) and then on toward the cut-off valve.

Air entering through intake (5) may also be pulled back by a vacuum in the tank, when it serves to ventilate the tank. Partition (6) ensures that the flushing air flows over all the carbon granules and promotes the release of fuel vapour toward the inlet manifold.

Two springs (7) allow the mass of granules to expand when the pressure increases.

Fuel vapour cut-off solenoid (M. Marelli Siemens EC1)

The function of this valve is to control the quantity of fuel taken up by the active carbon filter and directed to the intake manifold (via the injection-ignition control unit).
The valve is closed when de-activated to prevent fuel vapours enriching the mixture excessively.
The injection-ignition control unit controls operation as follows:

- during start-up, the solenoid remains closed to prevent fuel vapour from enriching the mixture excessively. This condition persists until the coolant temperature reaches a pre-established threshold (about 65 °C)
- with engine warm, the ECU sends the solenoid a square wave signal, which modulates opening in accordance with the signal empty/full pattern.
  In this way, the ECU controls the quantity of fuel vapour sent to the intake to prevent significant changes in mixture concentration.

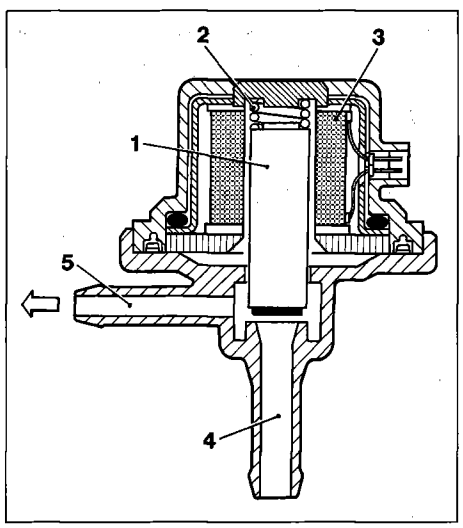

P4F45BJ01

Under the service conditions listed below:

- throttle in idle position
- speed less than 1500 rpm
- intake manifold pressure less than a limit setting computed by the ECU according to rpm level

solenoid activation is inhibited to maintain the unit closed in order to improve engine operation.

Longitudinal section through fuel vapour cut-off valve

1. Valve core.
2. Reaction spring.
3. Magnetic winding.
4. Pipe connected to air intake manifold
5. Pipe connected to active carbon filter.

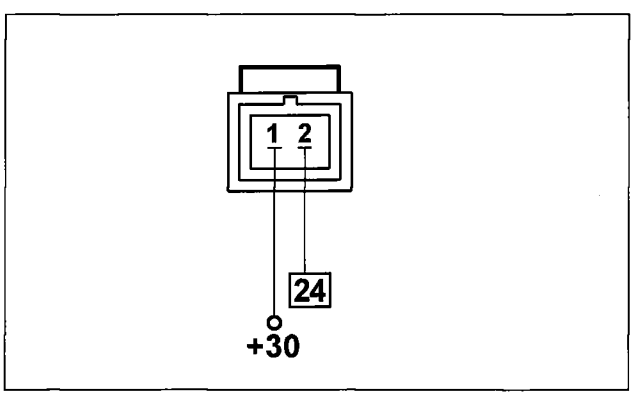

P4F45BJ02

Wiring connector

The numbers in boxes indicate the corresponding control unit pins

Recovery

Mixture self-adaption is inhibited.

Mixture concentration test is inhibited.

Lambda probe test is inhibited.

MULTIFUNCTION VALVE (SIRIO 0175.00)

This valve performs the following functions:
- prevents fuel flowing out when tank is over-filled or in case the vehicle overturns in an accident;
- vents fuel vapours from tank to the active carbon trap filter;
- ventilates the tank if a vacuum builds up inside.

This valve consists of: a float (2); a heavy ball (3); a plate (4), pushed against valve case of spring (5) and plate (8), pushed against plate (4) of spring (9). Multifunctional valve operation may be summarised as follows and depends on fuel tank level:

a. if the tank is full float (2) blocks hole (1) to prevent liquid fuel from reaching active carbon filter and hence damage to the filter;
b. the tank fuel level drops, float (2) is lowered and rests upon ball (3) to open hole (1). When the pressure exercised by fuel vapours on plate (4) overcomes load of spring (5), a ring opening between plate and valve case opens to allow fuel vapours to emerge from the duct (6) and reach the active carbon filter.

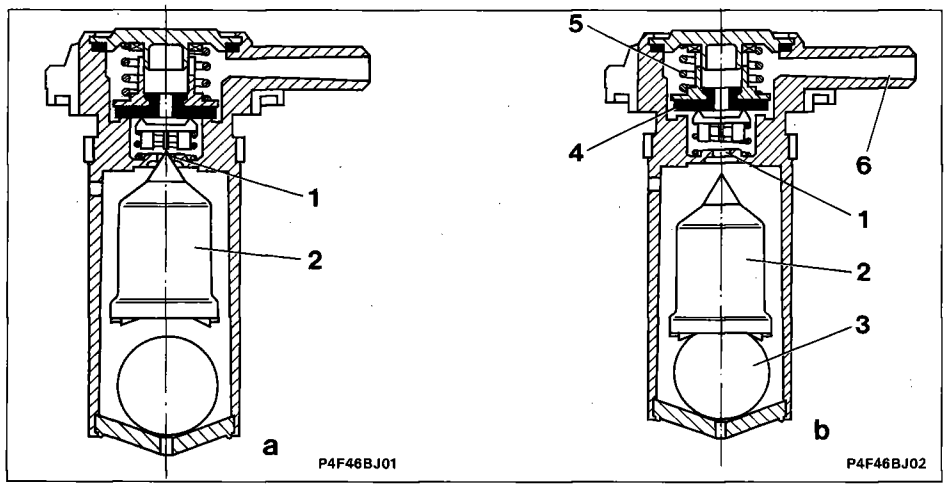

c. if the drop in tank fuel level is sufficient to set up a vacuum, this acts on plate (8) and overcomes load of spring (9) so that this moves down to allow tank ventilation through hole (7).
d. if the vehicle overturns, however full the tank, the weight of ball (3) acts on float (2) to push the float against hole (1) and prevent a dangerous flow of fuel to the intake manifold with the attendant risk of the vehicle catching fire.

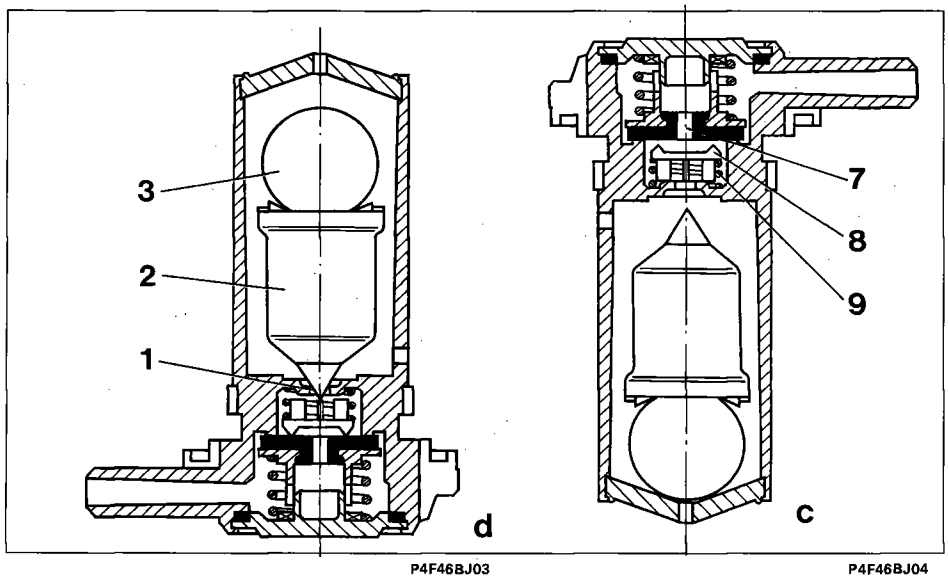

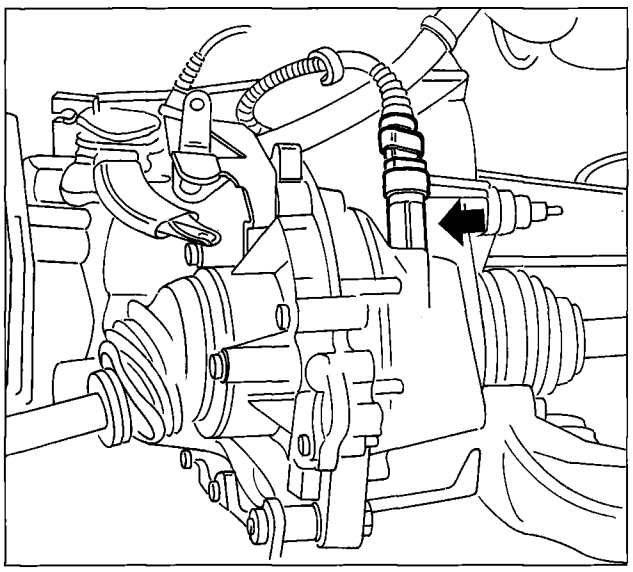

P4F47BJ01

VEHICLE SPEED SENSOR

SWF B451
BORLETTI TGK
SO.GE.MI.

The sensor is located on the differential output, near the left half-axle joint. It sends information on vehicle speed to the control unit: the signal is also used to operate the speedometer.

The sensor operates on the principle of the Hall effect (see section on "engine timing sensor") and transmits 16 pulses/revolution. Vehicle speed can therefore be calculated from pulse frequency.

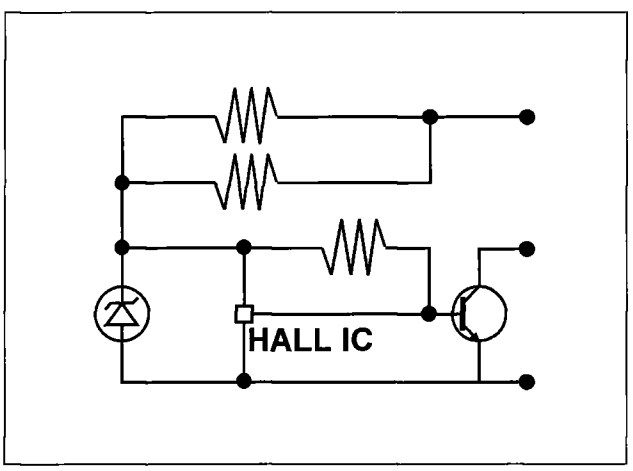

P4F47BJ02

Removing - refitting

Disconnect electrical connection and remove the sensor.

Tightening torque 0.8 daNm

Wiring diagram

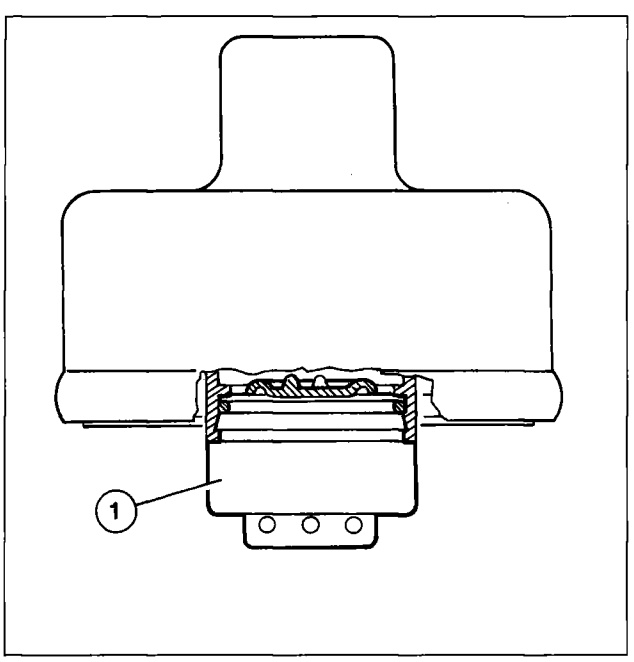

P4F47BJ03

PRESSURE RELIEF AND VENTILATION VALVE

This valve is located in the fuel filler cap and performs the following functions according to the pressure level in the tank:

- When the pressure inside the tank exceeds 0.13 - 0.18 bar, excess fuel vapours are vented to the outside (pressure-relief function).
- If, on the other hand, a vacuum builds up inside the tank, equivalent to 0.020 - 0.030 bar, air is taken into the tank (ventilation function).

Copyright Fiat Auto

INJECTORS (M. Marelli IWP 001)

The top feed, dual jet injectors (with spray offset in relation to injector axis) are specifically designed for 4 valve per cylinder engines: they allow the jets to be directed toward the two intake valves.
The fuel jet leaves the injector nozzle with a pressure differential of 3 bars and nebulises immediately to form two propogation cones.

Injector control is «sequential, staged», i.e all four injectors are controlled in accordance with the cylinder intake sequence. The supply to each cylinder may begin during the expansion stage up to a time when intake has already begun.

The fuel manifold presses against the injectors to fasten them into the seats on the intake ducts. They are also anchored to the fuel manifold by means of «safety clips». Two rubber rings (1) and (2) ensure a seal to the intake duct and fuel manifold.

The injectors are fed with fuel from the top of the case (2). The injector case houses coil (4) connected to terminals (5) of electrical connector (6).

NOTE *When removing and refitting, do not apply a force greater than 120N to injection connection (6) because its function could be impaired.*

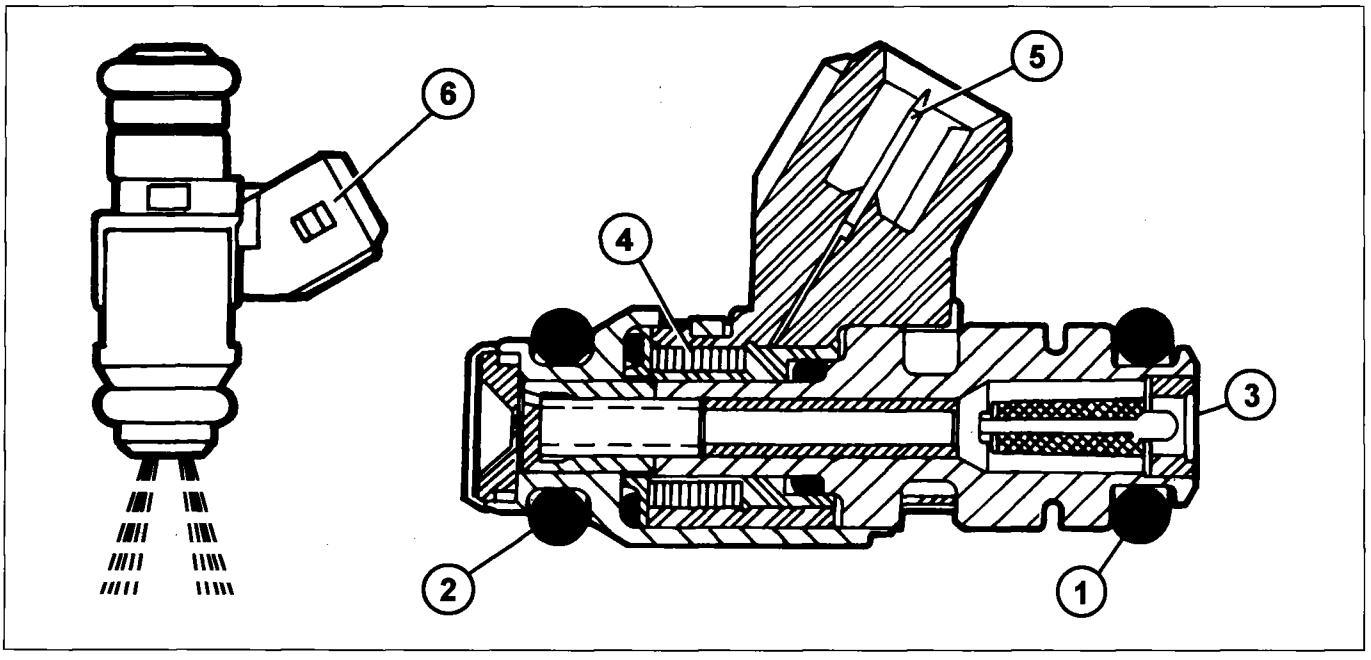

P4F48BJ01

Wiring connector

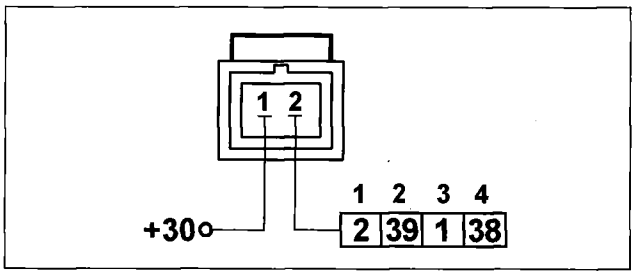

P4F48BJ02

NOTE *The numbers in boxes indicate ECU pin no. in order of cylinder number.*

Checking resistance

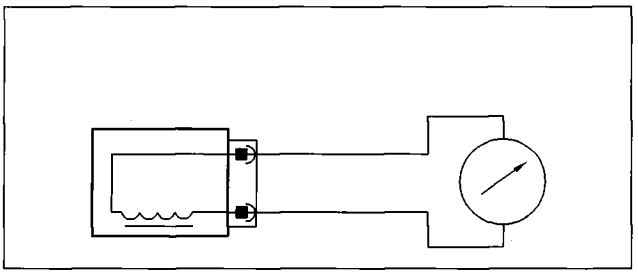

P4F48BJ03

Injector resistance may be measured by disconnecting the connector and connecting an ohmmeter as shown in the figure.

INERTIA SAFETY SWITCH

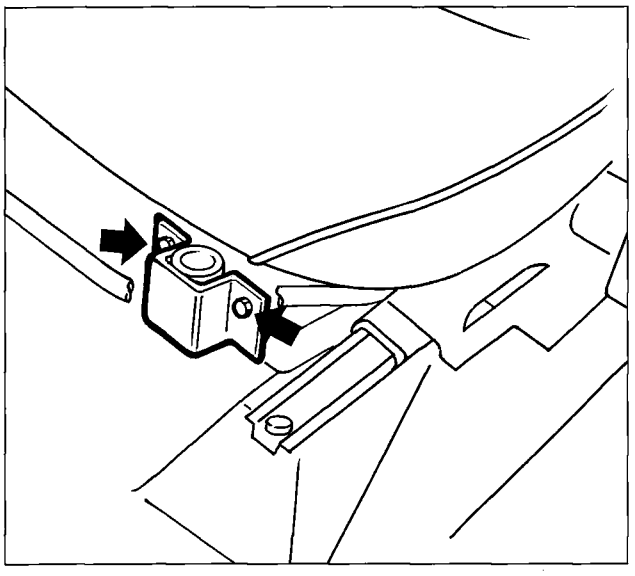

P4F49BJ01

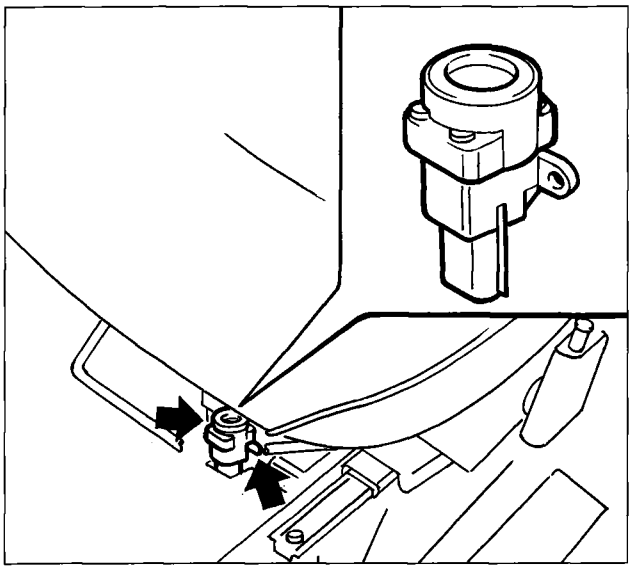

P4F49BJ02

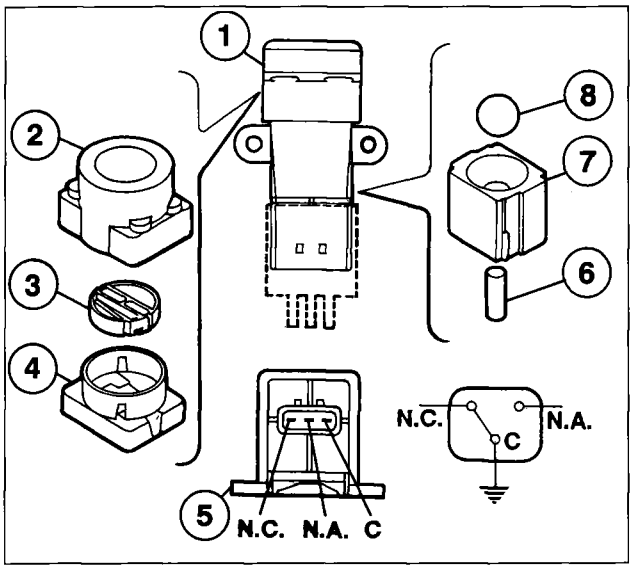

P4F49BJ03

The vehicle is equipped with an inertia switch located inside the passenger compartment beneath the driver's seat.

This sensor reduces the possibility of fire (caused by fuel emerging from the injection system) by de-activating the fuel feed pump. The switch consists of a steel ball fitted inside a tapered housing. It is held in position through the attractive force of an permanent magnet.
The ball is released from the magnetic force in the case of violent impact, when it opens the normally closed (NC) electrical circuit to cut off the fuel pump earth connection and thus the fuel supply to the injection system.
To restore the pump earth connection, push the seat back and press the switch until it clicks on.

Removing-refitting

1. Move driver's seat back fully, unscrew the bolts indicated and remove the plastic protection.
2. Unscrew the bolts indicated, disconnect electrical connection and remove the switch.

After even an apparently light collision, if a smell of petrol is noted or fuel leaks are seen, do not activate the switch again until the fault has been found and corrected in order to avoid the risk of fire.

Components of inertia switch

1. Inertia switch assembly
2. Sheath
3. Button
4. Upper end
5. Fitting end
6. Permanent magnet
7. Permanent magnet seat
8. Steel ball

C= Common terminal
N.C. Normally closed
N.A. Normally open

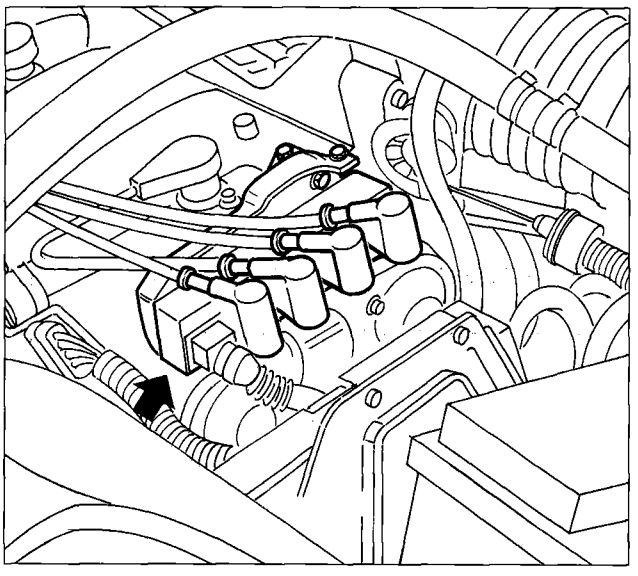

P4F50BJ01

IGNITION COILS
(Marelli Bae 920A)

The coils are fastened by means of a bracket to the camshaft covers and are closed magnetic loop type. They are formed from a layered pack, whose central core (broken by a narrow gap) carries both windings.

The windings are placed in a moulded plastic container embedded in epoxy resin, which gives them exceptional dielectric properties. Because the primary winding is so close to the magnetic core, little magnetic flux is lost and coupling with the secondary winding is maximised.

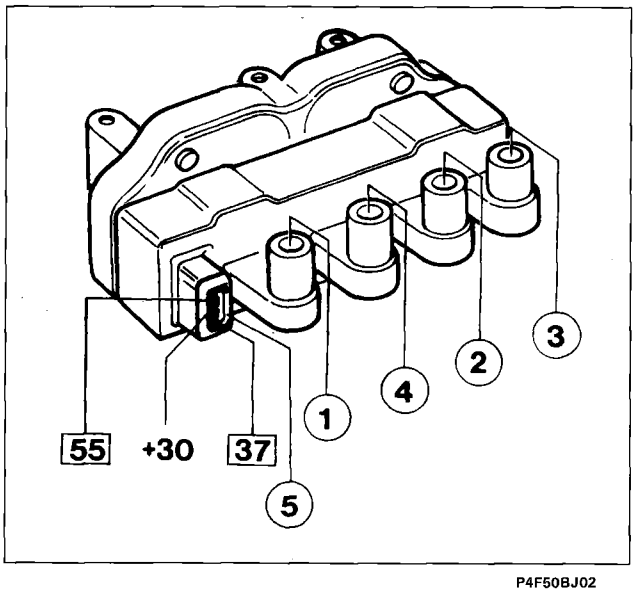

P4F50BJ02

1. HT socket for cylinder no. 1 spark plug
2. HT socket for cylinder no. 2 spark plug
3. HT socket for cylinder no. 3 spark plug
4. HT socket for cylinder no. 4 spark plug
5. LT socket for ECU connection
6. Primary circuit
7. Gap
8. Secondary circuit

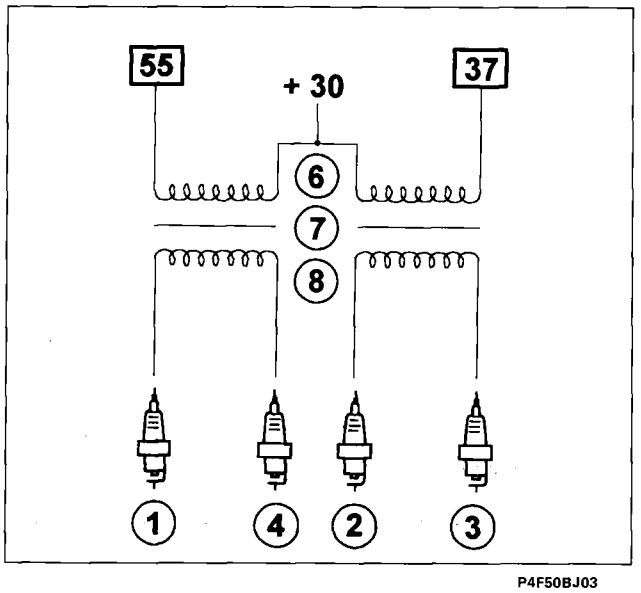

P4F50BJ03

Wiring connector

NOTE *The numbers in boxes indicate the corresponding control unit pins.*

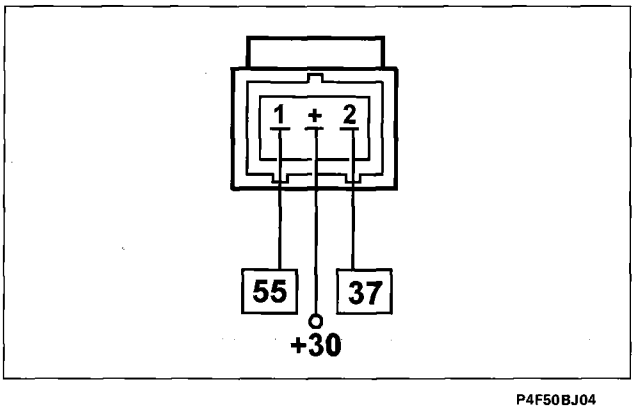

P4F50BJ04

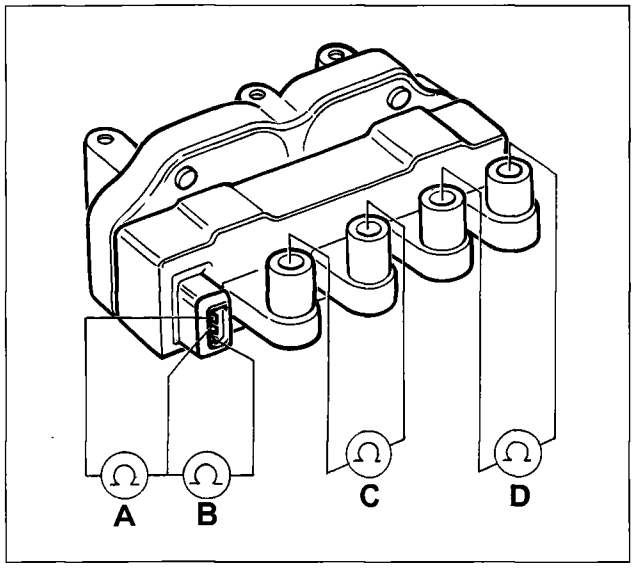

P4F51BJ01

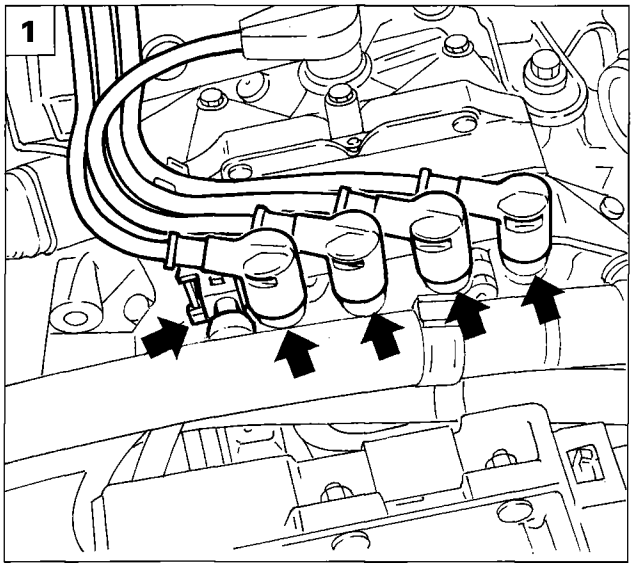

P4F51BJ05

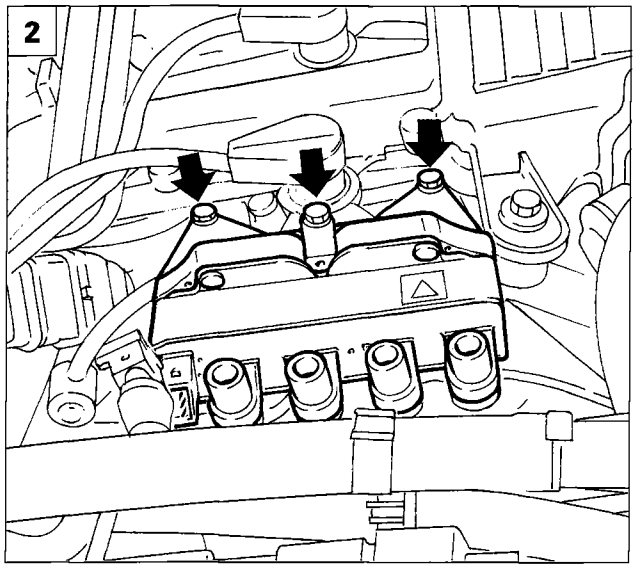

P4F51BJ06

Checking winding resistance

Primary circuit (A cylinders 1-4, B cylinders 2-3)

Bring the probes of an ohmmeter into contact with the postive strip (central pin) and the negative strip (pin 1 for circuit A and pin 2 for circuit B).

The primary circuit resistance reading on the guage should be between 0.55 and 0.61 ohm at 23 °C.

Secondary circuit (C cylinders 1-4, D cylinders 2-3)

Bring the probes of an ohmmeter into contact between the two high tension outlet terminals.

The secondary winding resistance reading on the gauge must be between 8645 and 9555 ohms at 23 °C.

Recovery

Inhibition of injectors for cylinders in which ingnition is not taking place.

Open-loop concentration control

Current command is de-activated when battery d.c. is applied in order to try again later.

If circuit is open or short-circuited, GND assumes a charge time proportional to battery voltage.

Removing refitting

1. Disconnect HT leads and the electrical connection indicated by arrows from the spark plug assembly.
2. Unscrew the screws indicated and remove the coil assembly

10.

DUAL RELAY (NDRS 240113)

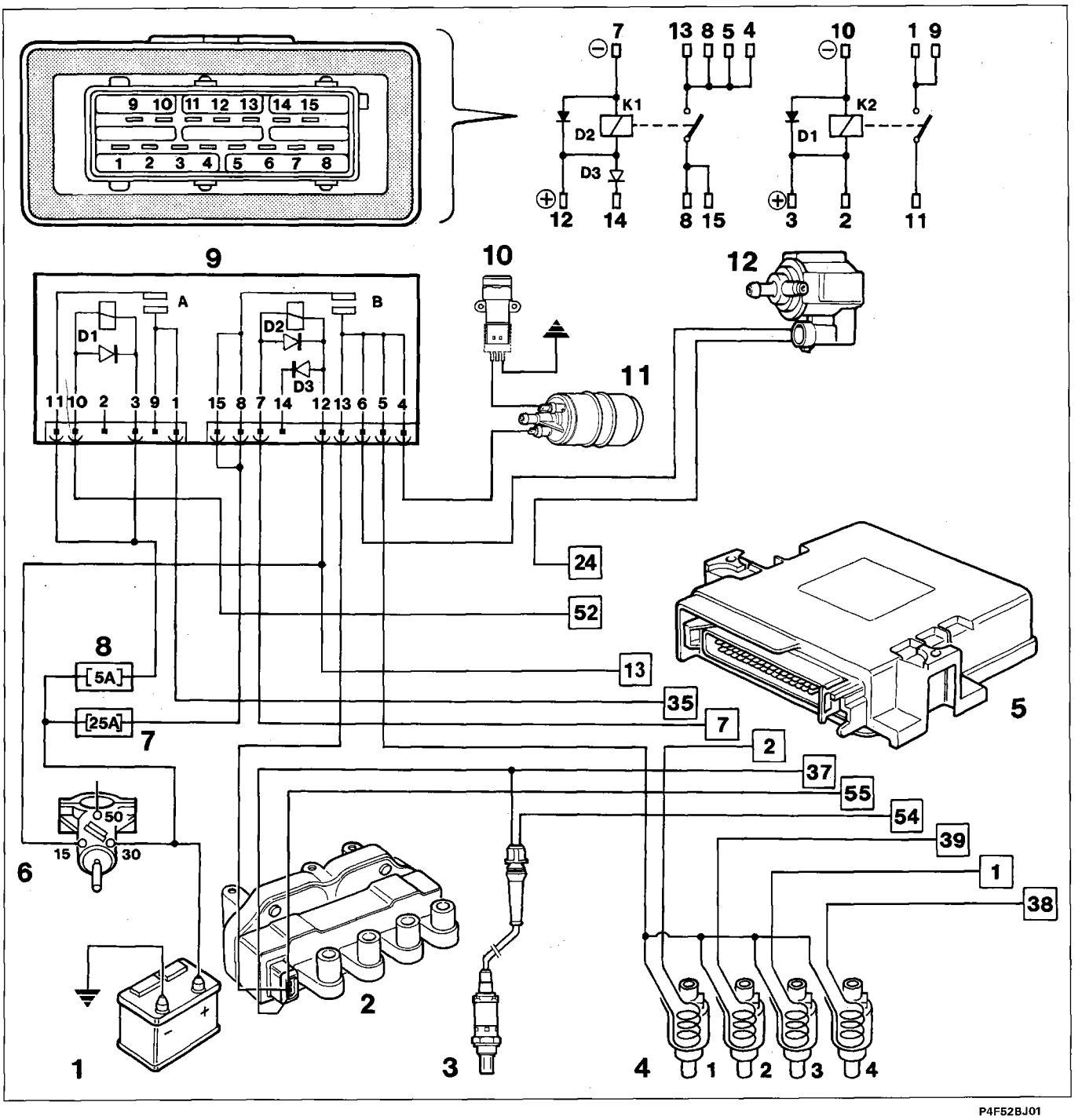

P4F52BJ01

1. Battery
2. Ignition coils
3. Lambda probe
4. Injectors
5. Electronic control unit
6. Ignition switch
7. 20A system fuse
8. 5A control unit fuse
9. Dual relay (A-Control unit B-Electric fuel pump)
10. Inertia safety switch
11. Electric fuel pump
12. Fuel vapour cut-off solenoid

A dual relay specifically for automotive applications ensures the battery voltage reaches the system. This electrical device consists of a single container containing two special normally open relays whose task is to supply the electronic control unit (section A, control unit supply) and main injection-ignition power circuits (pump, coils etc.) (section B).

When ignition key is in MAR position "Services 15/54", excitation winding of relay (9) on pin 12 and ECU on pin 13 are activated.

As soon as ECU (5) receives voltage at pin 13 through pin 52 (internal earth), it enables closure of power contacts of relay A (ECU POWER SUPPLY section) to ensure the battary is supplied at pin 35 through fuse (8); it then enables closure of power contacts of relay B in order to earth pin 7 and ensure a power supply to pump (11) and the other sensors and actuators making up the injection system.

The fuel pump must be activated before starting up the engine to ensure that the fuel system is already under a pressure of 3 ± 0.5 bar.If starting does not not take place with the ignition key in MAR position, the electronic control unit (5) deactivates section of relay (9) pin 7 (pump-components) and automatically stops the pump (11). Timed enablement lasts about 10 sec.

For safety reasons, the ECU (5) activates a control strategy for pump (11) based on engine rpm. In practice, the ECU (5) deactivates section of relay (9) pin 7 in order to cut off supply to the pump (11) when engine rpm drops below a minimum memorised threshold, if the engine stalls with the ignition on or if the start-up code is not recognised by the Fiat CODE system.
When the ignition key is returned to STOP position, the electronic control unit maintains section A of the dual relay excited for about 90 seconds before cutting off its power supply (time taken to transfer data from RAM STAND-BY memory to the EEPROM.

NOTE *Diodes D1 and D2 reduce voltage surges in the respective relays. Diode D3 acts against the voltage from the low alternator charge warning light.*

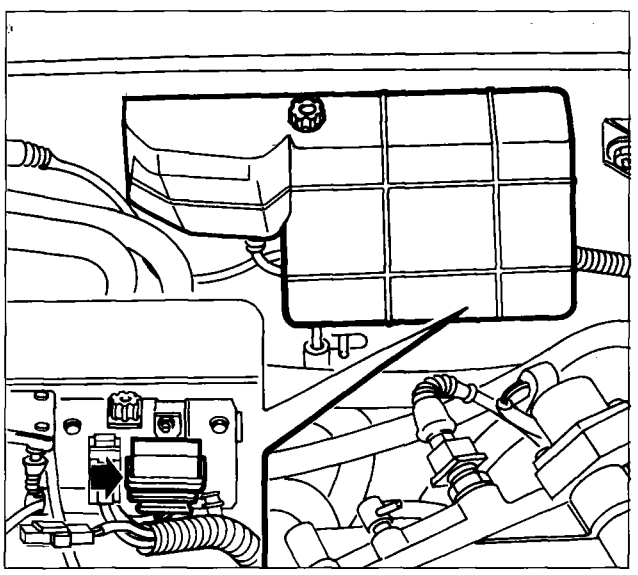

P4F53BJ01

Removing-refitting

The dual relay is fitted on a bracket against the rear wall of the engine bay. Proceed as follows to remove-refit:

Remove the protective cover.
Disconnect electrical connection and remove the dual relay.

10.

LAMBDA PROBE (NTK 0ZA112-A1)

This sensor measures exhaust gas oxygen content.
The sensor output signal is sent to the electronic control unit to adjust the air-fuel mixture in order to maintain the ratio as close as possible to stoichiometric levels.
To obtain an optimum mixture, the quantity of fuel injected must be as close as possible to a theoretical quantity that could be fully burnt for a given amount of air taken in by the engine.

In this case, Lambda factor (λ) is said to be equal to 1;in fact:

$$\lambda = \frac{\text{INTAKE AIR QUANTITY}}{\text{THEORETICAL QUANTITY OF AIR NECESSARY TO BURN ALL THE FUEL INJECTED}}$$

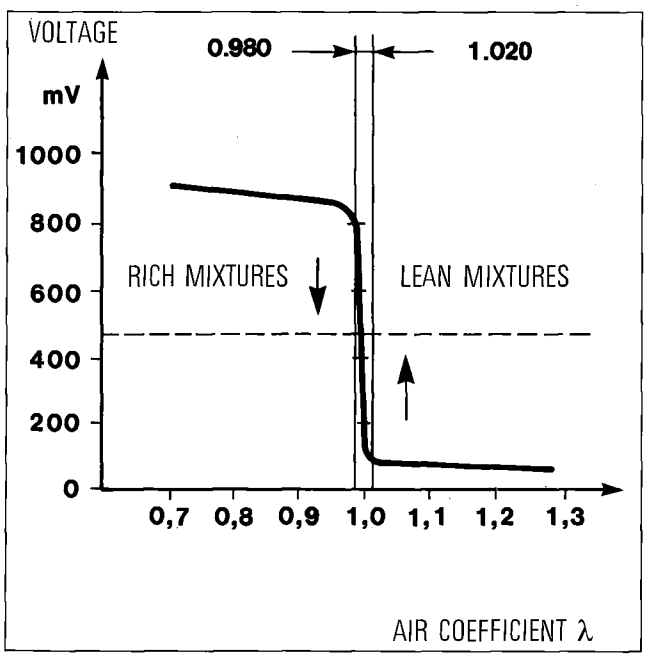

P4F54BJ01

$\lambda = 1$ Ideal mixture
CO levels are within legal limits

$\lambda \geqslant 1$ Lean mixture
Excess air; CO levels tend to be low

$\lambda \leqslant 1$ Rich mixture
Lack of air; CO levels tend to be high

NOTE *While the coefficient λ expresses an excess or lack of air supplied to the engine in relation to the theoretical required level, the air-fuel mixture is a ratio between these two substances that react chemically when combined. The stoichiometric proportions depend on fuel type used: this ratio is 14.7-14.8 for present-day engines, which means they require 14.7 parts of air to burn 1 part of petrol fully.*

The probe is fastened upstream of the converter.

It consists of a ceramic case (1) made up of a zirconium dioxide base covered by a light layer of platinum. It is sealed at one end, enclosed in protective pipe (2), and housed in metal case (3) that provides further protection and permits installation to the exhaust manifold. The outer part (B) of the ceramic case is exposed to the exhaust gas flow while inner part (A) communicates with the outside air.

The probe works on the principle that when the temperature exceeds 300 °C, the ceramic material used begins to conduct oxygen ions. Under these conditions, if the levels of oxygen at both ends (a and b) of the probe are different, a voltage variation is set up between the two ends. This signal notifies the ECU that the oxygen residues in the exhaust gas are not in proportions that will ensure lean burning of harmful residues.

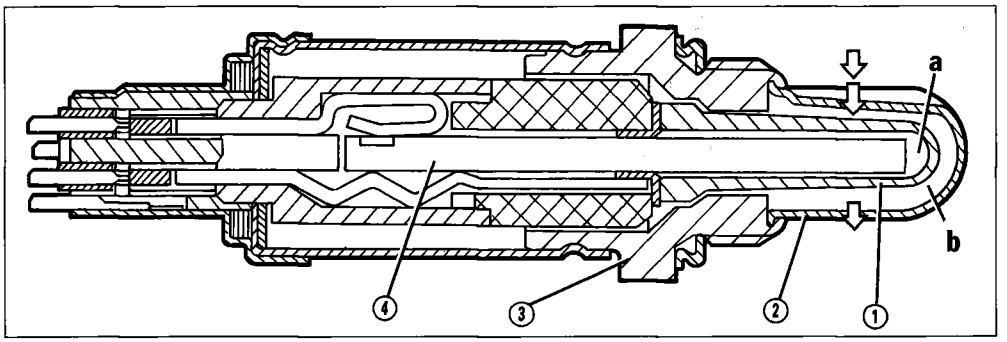

P4F55BJ01

a. (+) electrode in contact with outside air

b. (-) electrode in contact with exhaust gas

1. Ceramic case
2. Protective pipe
3. Metal case
4. Electrical resistant

When the probe supplies a low voltage level (less than 200 mV) the ECU recognises that the mixture is lean (lambda » 1) and takes steps to increase the amount of fuel injected. When the probe supplies a high voltage level (greater than 800 mV) the control unit recognises that the mixture is rich (lambda « 1) and decreases the quantity of fuel injected.

The lambda probe therefore alters injection times to ensure that the engine operates with a lambda factor continually fluctuating between 0.980 and 1.020.

Below 300 °C the ceramic material is not active and the probe does not send usable signals. A special circuit in the control unit blocks loop mixture regulation while the probe is warming up.

To ensure service temperature is reached quickly, the probe is equipped with electrical resistance (4) supplied by the battery

The probe may be swiftly put out of service by even slight traces of lead in the fuel. Operation should be checked at 45,000 and 90,000 km in accordance with the programmed maintenance plan.

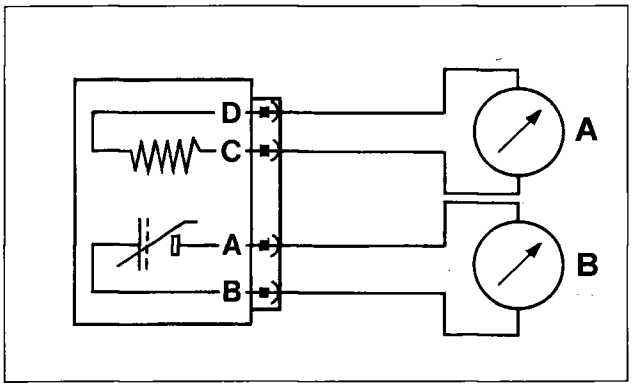

P4F55BJ02

Checking resistance

The heater and probe resistance may be measured by disconnecting the connector and connecting an ohmmeter as indicated in the figure.

Heater resistance (A) = 4.3 - 4.7 ohm

Probe resistance (B) = 5,000 ohm (max)

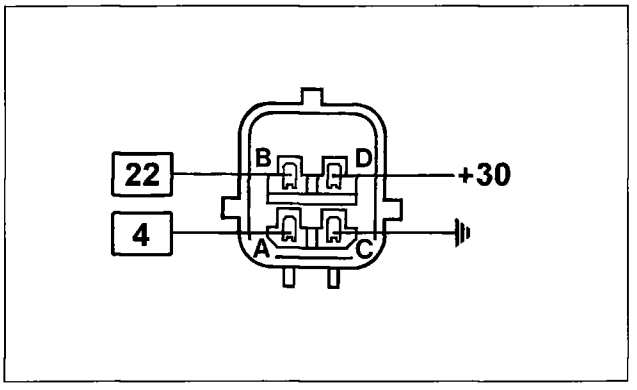

P4F55BJ03

Recovery

Lambda data are ignored (open loop).

Wiring connector

The numbers in boxes indicate the corresponding control unit pins.

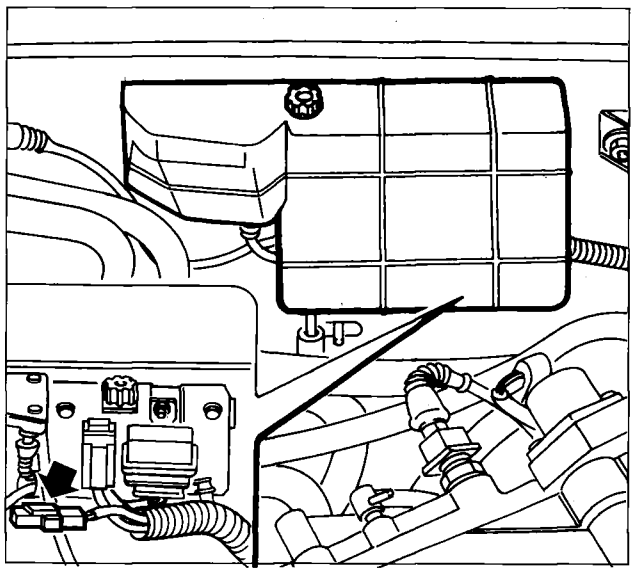

P4F56BJ01

REMOVING - REFITTING LAMBDA PROBE

- Place the vehicle on a lift
- Disconnect battery negative lead
- Disconnect electrical connection located against the rear wall of the engine bay and protected by a cover.

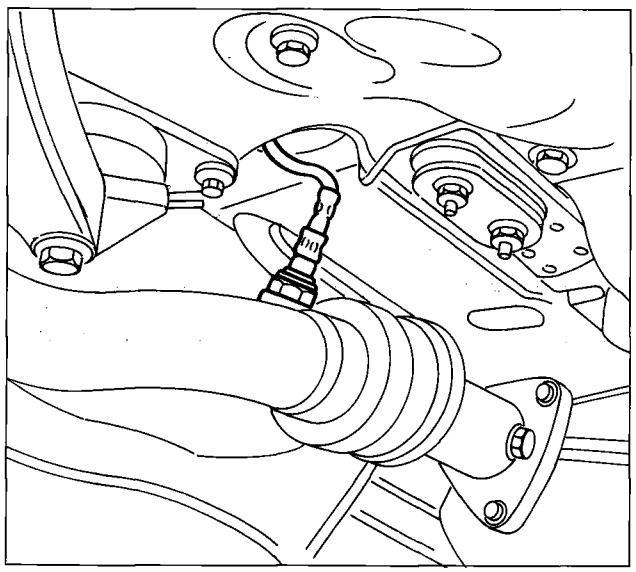

P4F56BJ02

Remove the lambda probe from its seat on the exhaust pipe.

When refitting, spread the threaded part with 'ANTISEIZE MATERI-A-BORON NITRIDE N.G.K. grease from SPARK PLUG CO-LTD.

Tightening torque 3.5 - 4.5 daNm

CHECKS, ADJUSTMENTS AND REPAIRS TO INJECTION-IGNITION SYSTEM

OBSERVE THE FOLLOWING PRECAUTIONS WHEN WORKING ON VEHICLES WITH IAW INJECTION-IGNITION SYSTEMS:

- *never start the engine when the electrical terminals are poorly connected or loose on the battery poles;*
- *never use a fast battery charger to start the engine;*
- *never disconnect the battery from the car circuit with the engine running;*
- *when charging the battery quickly, first disconnect the battery from the vehicle circuit;*
- *if the vehicle is placed in a drying oven after painting at a temperature of more than 80° C, first remove the injection/ignition ECU;*
- *never connect or disconnect the ECU multiple connector with the ignition key in MARCIA position;*
- *always disconnect battery negative lead before carrying out electrical welding on vehicle.*

Note that the memory of this system is active at all times (memory on stand-by), and contains all learnt self-adaptive parameters. Because all this information would be lost if the battery were disconnected, this operation should only be carried out when absolutely essential.

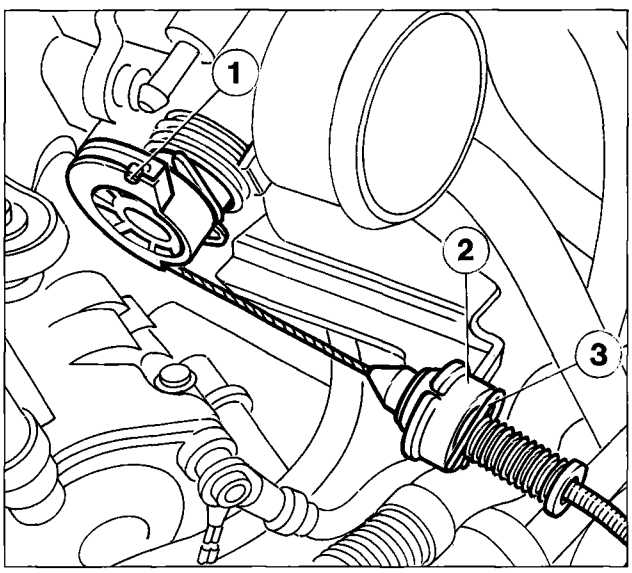

P4F57BJ01

ADJUSTING THROTTLE CABLE

The accelerator cable is adjusted by moving clip (3) along the grooves on bush (2).

Position the clip so that head (1) of the accelerator cable fits freely into the slot without altering idle speed.

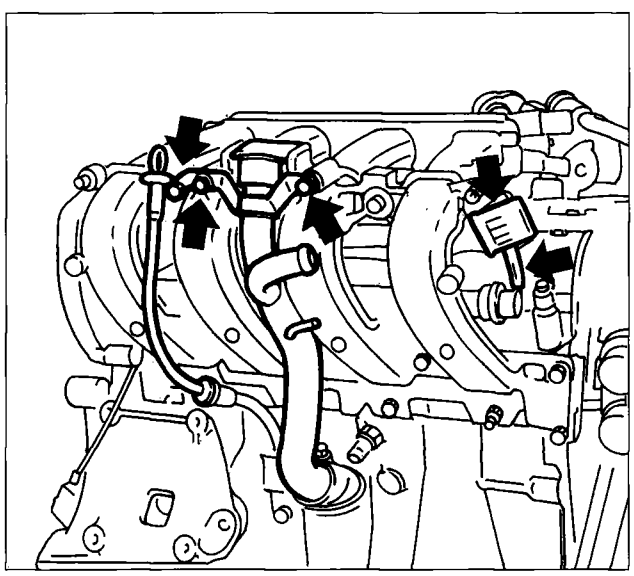

P4F57BJ02

REMOVING-REFITTING FUEL MANIFOLD AND INJECTORS

Disconnect the first section of the oil dipstick mount, disconnect the oil filler pipe, disconnect the injector lead coupling and the pipe connecting the regulator to the vacuum point.

10.

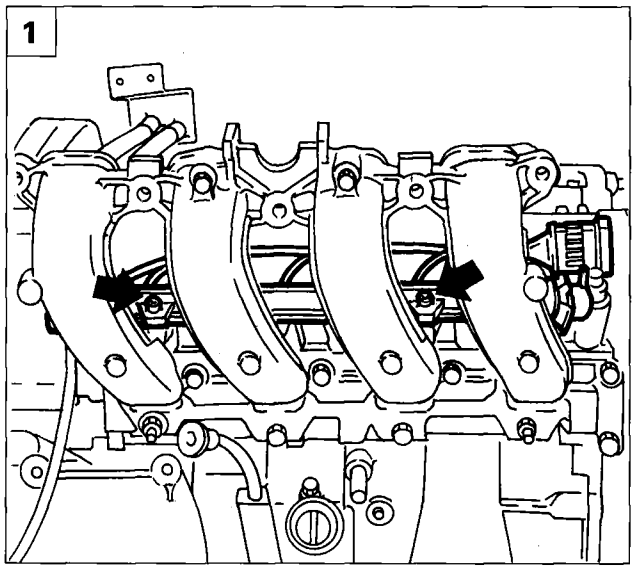

P4F58BJ01

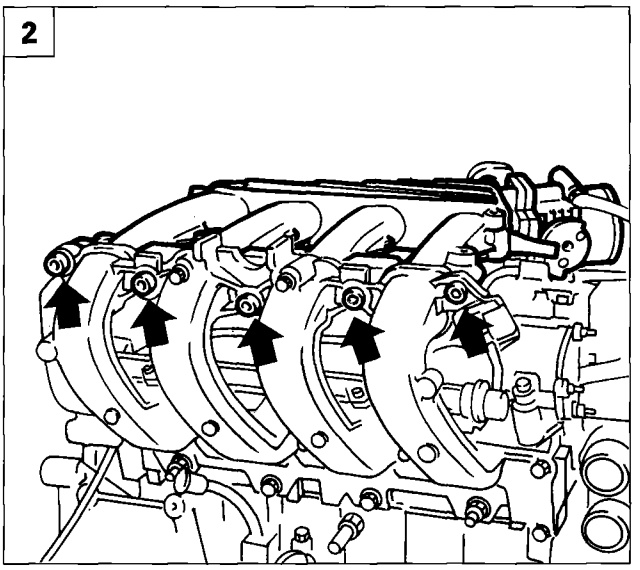

P4F58BJ02

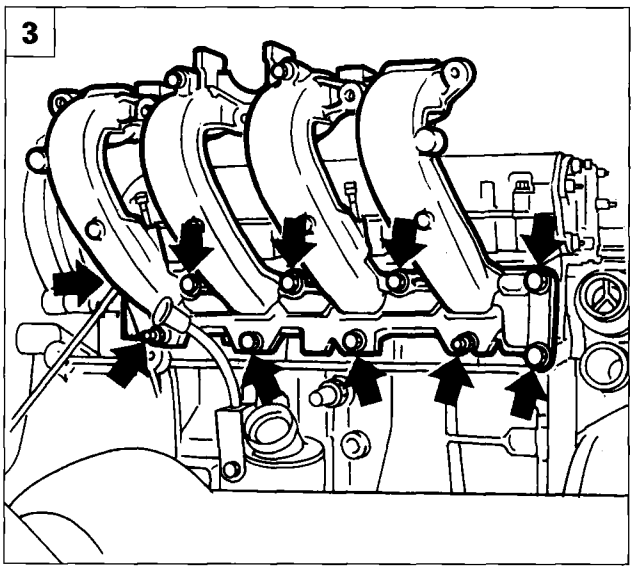

P4F58BJ03

1. Unscrew the bolts fastening the fuel supply manifold.
2. Unscrew the bolts fastening both sections of the intake manifold together.
3. Unscrew screws fastening the second section of the intake manifold to the engine block and remove.
4. Disconnect the fuel lines and remove the manifold together with regulator and injectors.
5. Then remove the injectors as follows:

   - Disconnect electrical connection (1).
   - Remove the safety clip (2).
   - Remove press-fitted injector (3).

Never use the electrical connector to remove the injector.

Check condition of seal before refitting.

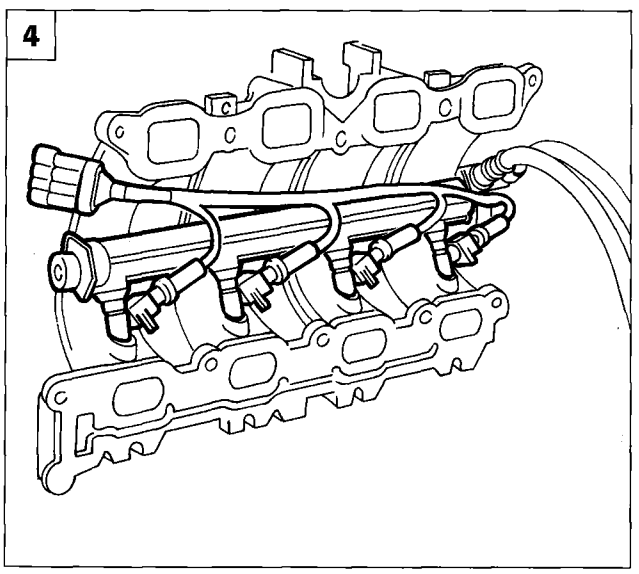

P4F43BJ01

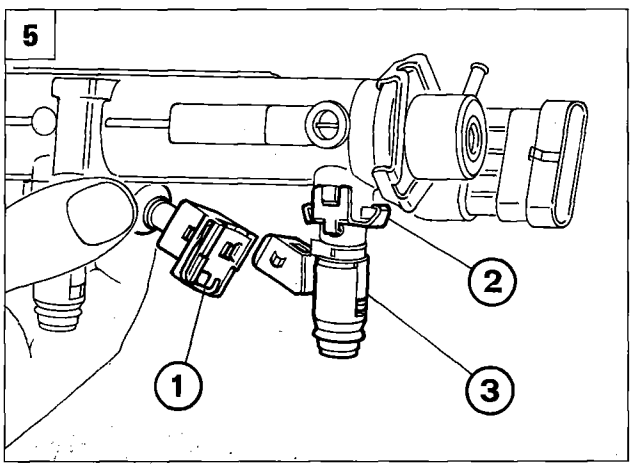

P4F58BJ04

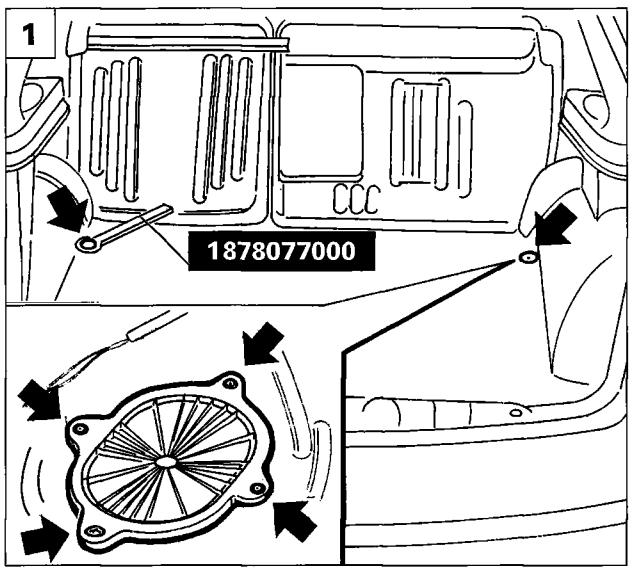

P4F41BJ01

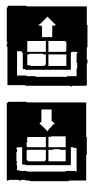

REMOVING-REFITTING FUEL TANK

Before removing-refitting the fuel tank, position the vehicle on a stand and disconnect the battery negative lead.

1. Lift the load compartment lining after undoing the retaining studs using wrench 1878077000. Remove the protective cover shown in the box after undoing the retaining screws.

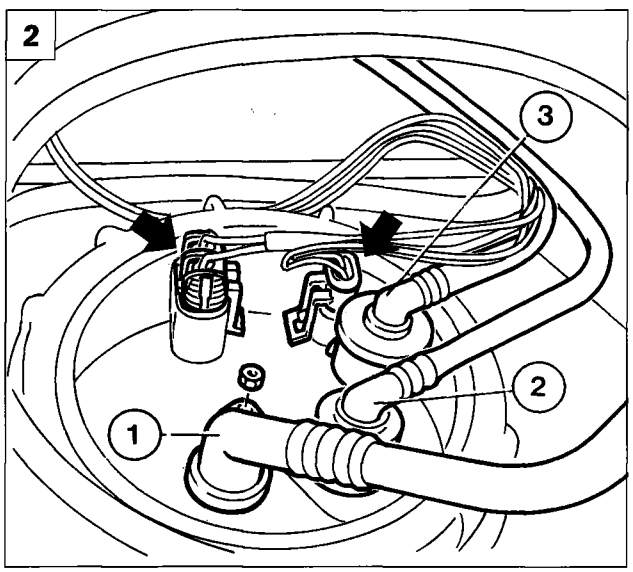

P4F59BJ01

2. Disconnect electrical connections from the pump and from the fuel level sender unit. Disconnect the vent pipe (1) by undoing the retaining nut and fuel return and delivery lines (2) and (3) by undoing the retaining tabs.

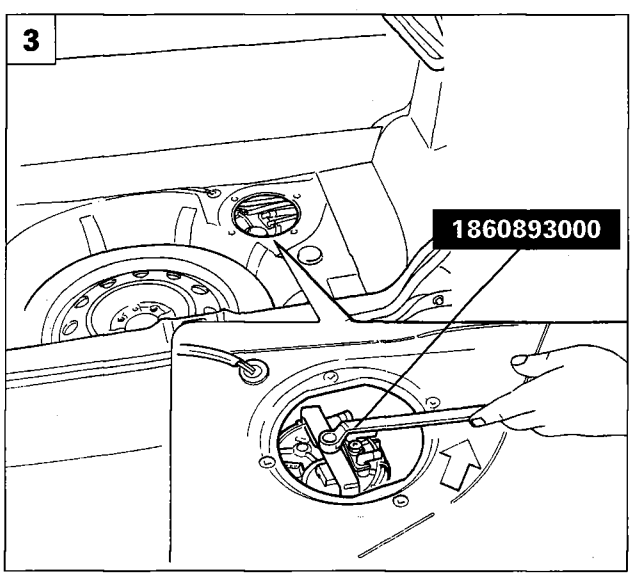

P4F41BJ02

3. Unscrew the ring nut retaining the pump to the tank using tool 1860893000 together with a box wrench.

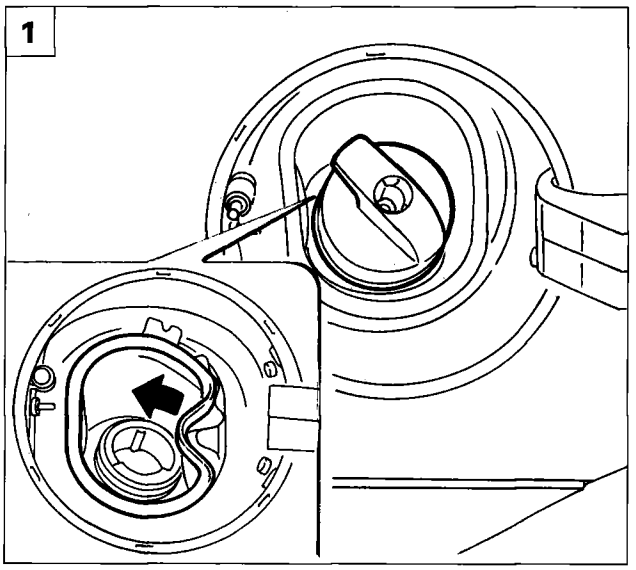

P4F60BJ01

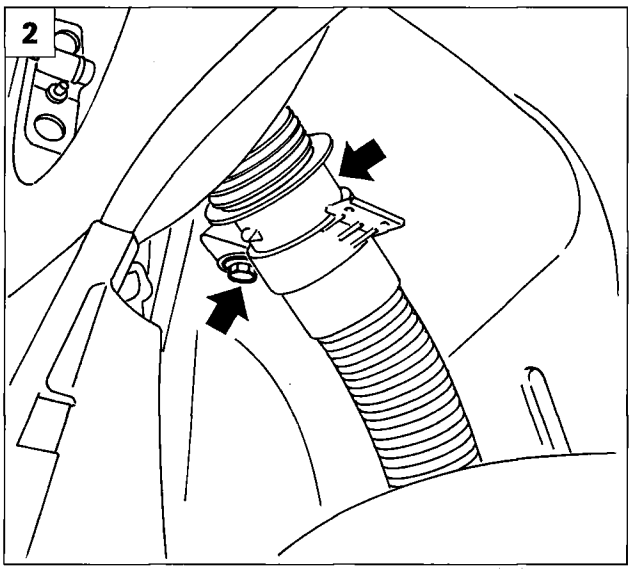

P4F60BJ02

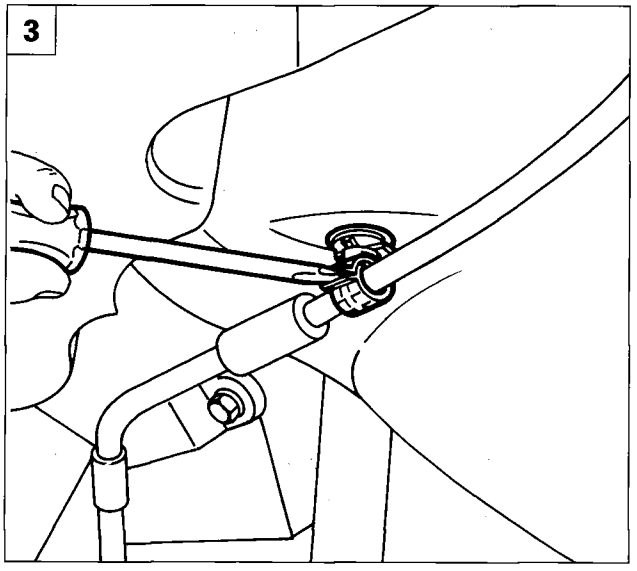

P4F60BJ03

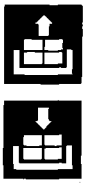

1. Unscrew the plug and remove the fuel filler fitting from its housing.
2. Remove the bolt and plug retaining the fuel filler fitting to the body.

3-4. Open the clips and release the parking brake control leads from the anchorages on the fuel tank.

5. Position a hydraulic jack beneath the tank to provide support during removal and re-fitting. Then remove the front bolt and plugs retaining the tank to the body.

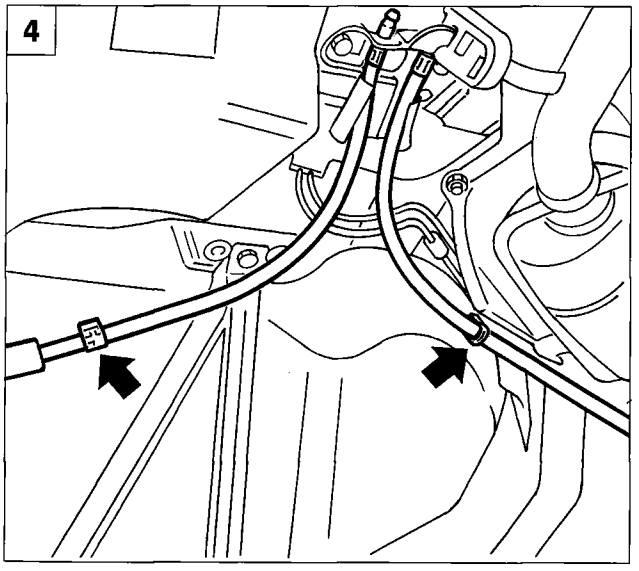

P4F60BJ04

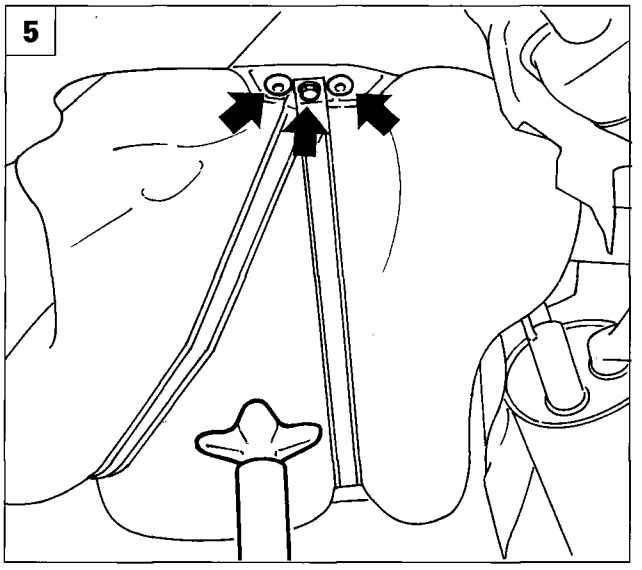

P4F60BJ05

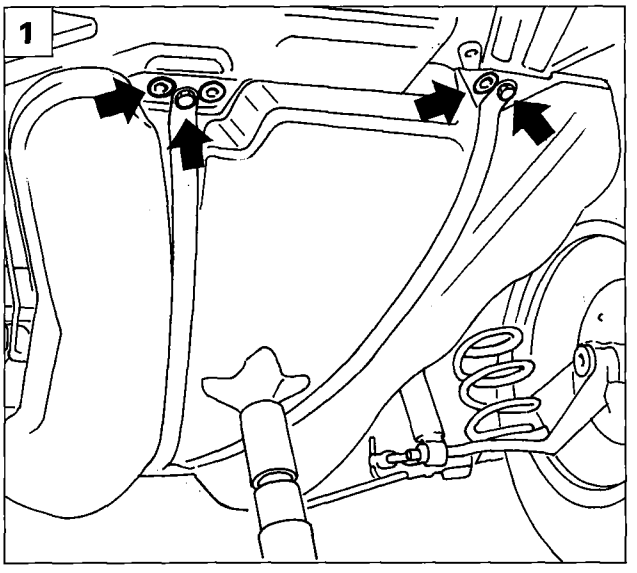

P4F61BJ01

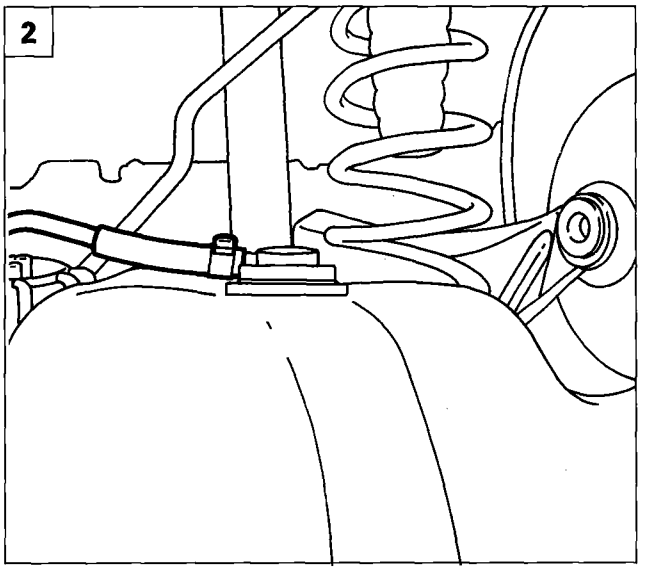

P4F61BJ02

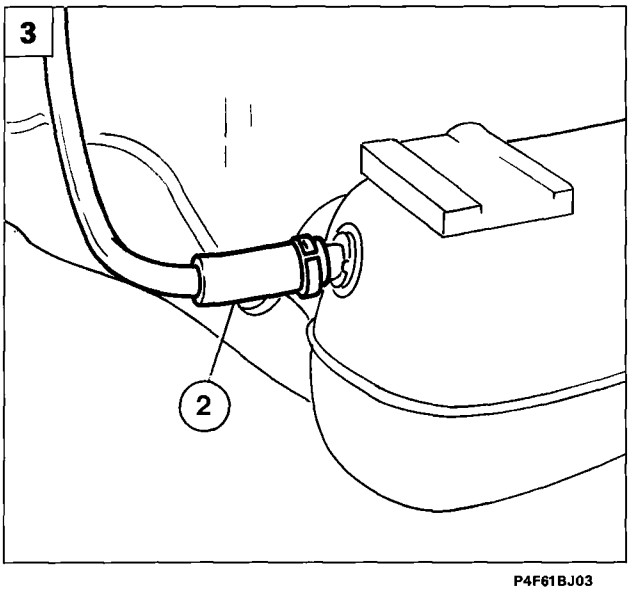

P4F61BJ03

1. Remove the rear bolts and plugs retaining the tank to the body.
2. Gradually lower the hydraulic jack, check that the tank is properly balanced and then disconnect the fuel vapour recovery line.
3. If necessary, disconnect the breather pipe on the tank as well.
4. Fuel tank.

It is not possible to reverse the electrical connections and fuel lines on the pump assembly during reassembly because the terminals are of different diameter.

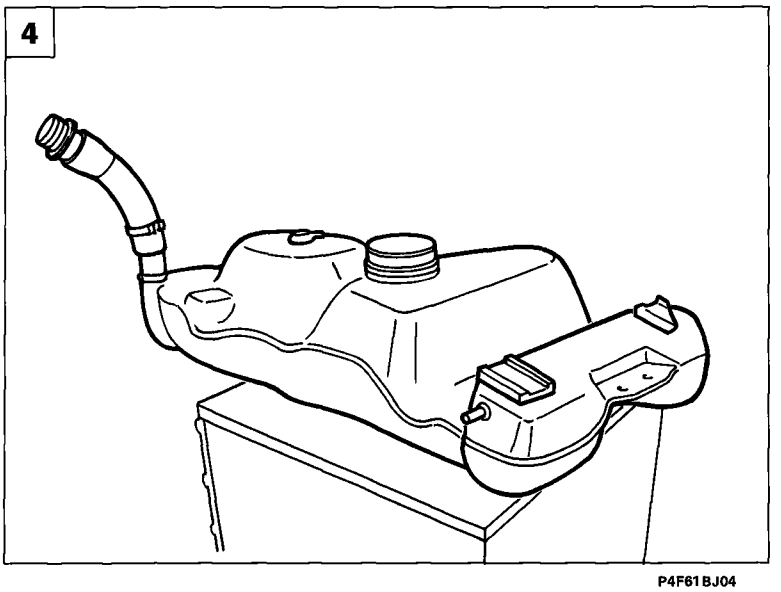

P4F61BJ04

CHECKING FUEL SUPPLY CIRCUIT

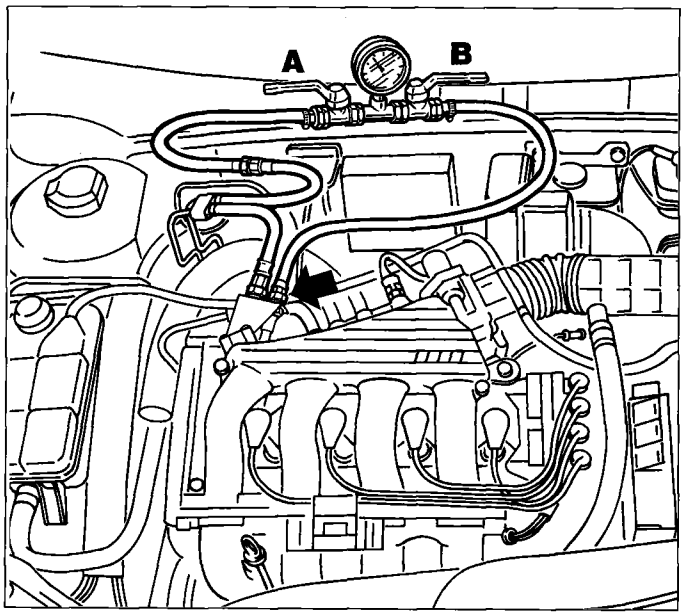

P4F62BJ01

Test 1

Testing fuel regulation pressure

- Disconnect fuel delivery line to manifold from arrowed fitting.
- Interpose pressure gauge 1895890000 between the disconnected pipe end and the fuel manifold with cocks (A) and (B) open.
- activate fuel pump with engine off.

The last operation is carried out by selecting "fuel pump" test on a Fiat/Lancia tester.
Under these conditions, the pressure gauge reading should stabilise at 3.0 bar.
If pressure is insufficient, carry out test 2.

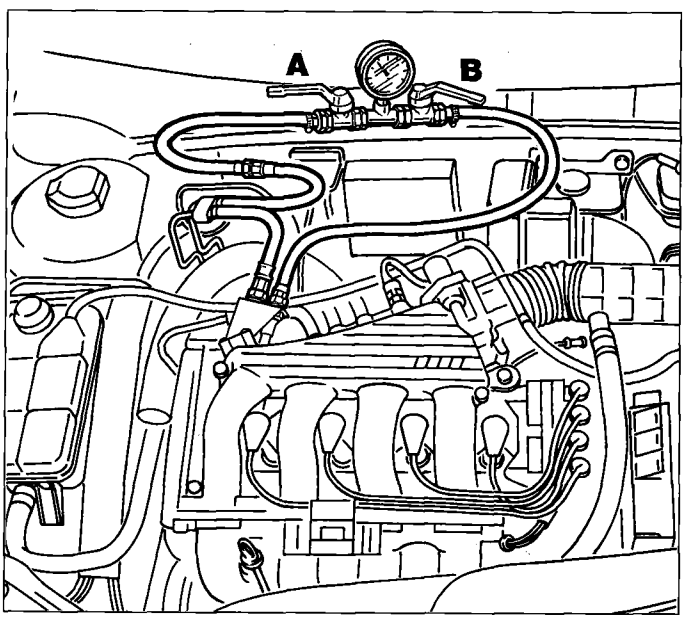

P4F62BJ02

Test 2

Testing maximum fuel feed pressure (or pump efficiency)

Same connections as previous test.

- Close fuel cock lever (A);
- operate the pump with the engine off, as described previously: pressure should not exceed 7 bar (pump pressure relief valve setting). Otherwise, replace the pump because it is defective.

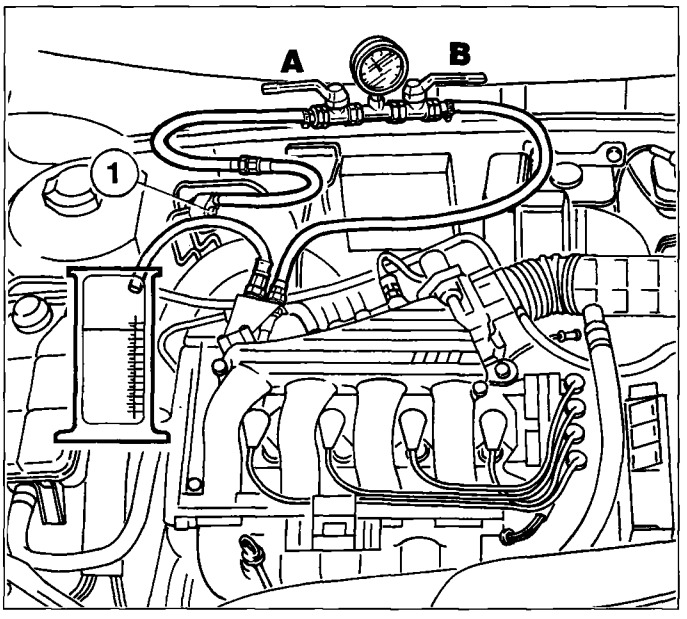

P4F63BJ01

If pressure measured in test 1 (see previous page) exceeds 3 bars proceed as follows:

- disconnect fuel return pipe (at point (1) for connection to rigid fuel return line to pump) and place in a container suitable for collecting the fuel.
- open cocks A and B;
- operate the fuel pump with engine off as described on previous page, then take pressure reading off pressure gauge:
  a. if it reaches 3 bars replace the fuel return pipe to the tank because it is blocked or kinked;
  b. if it exceeds 3 bars replace the pressure regulator because it is defective.

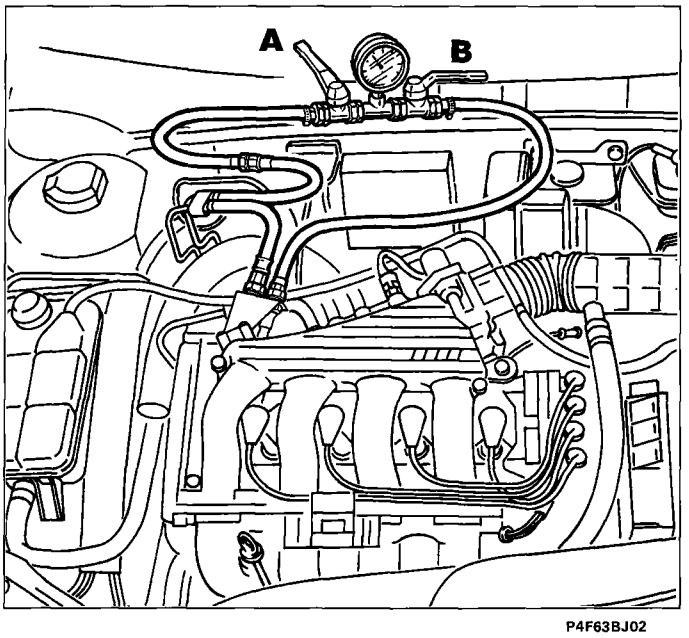

P4F63BJ02

Test 3
Checking injector seal

To check for drips from the injectors, connect as described in first test (regulation pressure check) and then operate the pump with the engine off. When the regulation pressure is reached, close control lever A and simultaneously constrict fuel return line to tank; use pliers for this purpose and avoid damaging the pipe.

This operation is necessary to discriminate between true loss from the injectors and a faulty seal on the fuel pressure regulator runout valve.

Then:

- turn off the pump;
- see whether pressure remains constant for 60 seconds after stabilising (i.e. dropping slightly).

If it does not, one or more injectors or a fitting are leaking.

- In this case, disconnect the fuel manifold from the intake manifold and keep the pressure gauge connected.
- Repeat the previous test but leave the pressure gauge cock open.
- After supplying the pump with the engine off, look to see whether any of the injectors or connection sections are dripping.

Replace any dripping injectors and/or repair the defective seal in the leaking joint.

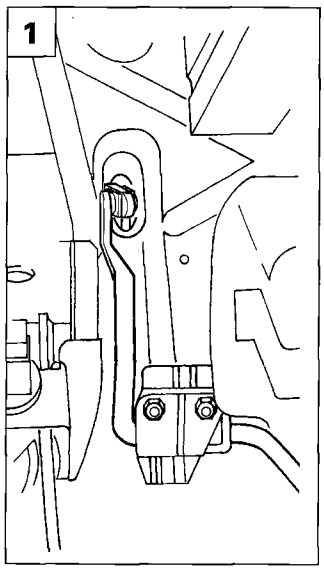

P4F49CJ01

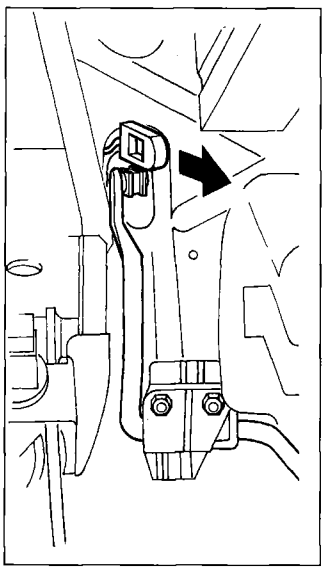

P4F49CJ02

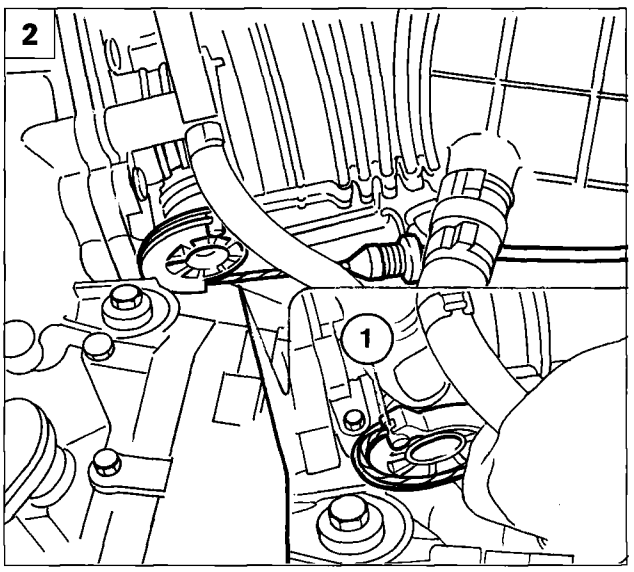

P4F64BJ01

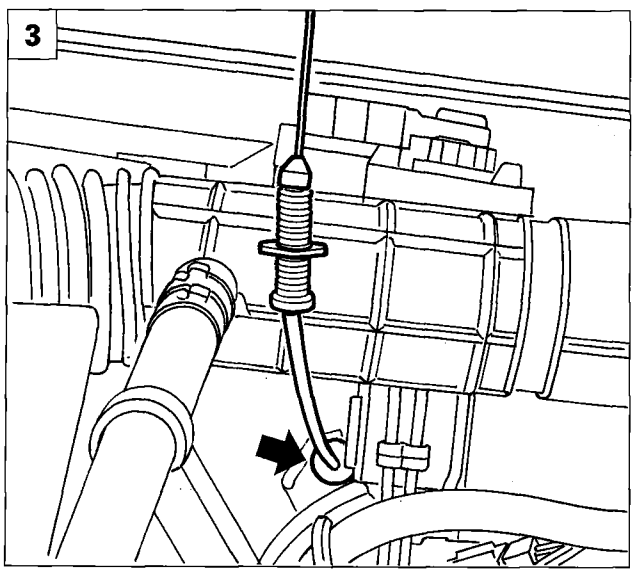

P4F64BJ02

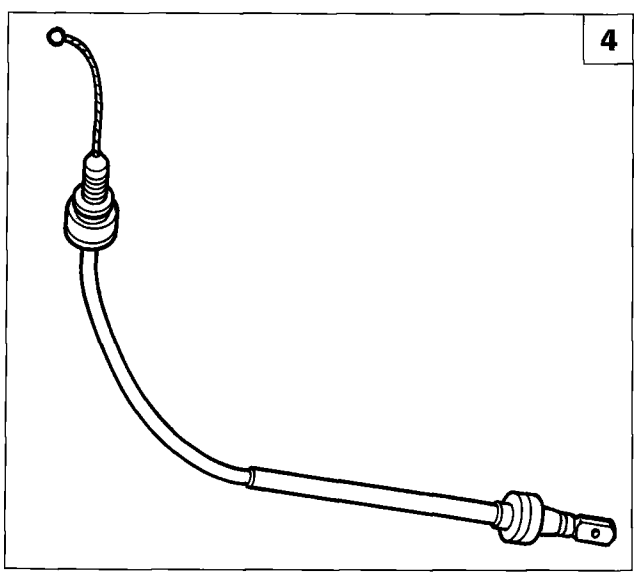

P4F64BJ03

REMOVING-REFITTING ACCELERATOR CABLE

Disconnect the battery lead, then proceed as follows:

1. Working from inside the vehicle, disconnect the control cable from the anchorage on the accelerator pedal.
2. Turn the throttle valve control lever inside the engine bay and disconnect the accelerator cable. Withdraw the cable from the support slot (1).
3. Withdraw the flexible block from the anchorage hole on the dashboard and remove the accelerator cable assembly.
4. Accelerator cable assembly.

When refitting, adjust the accelerator cable as described in the paragraph "Adjusting throttle cable".

REMOVING-REFITTING ACCELERATOR CONTROL CABLE

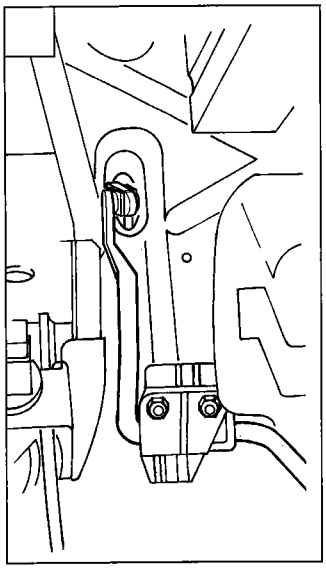

P4F49CJ01

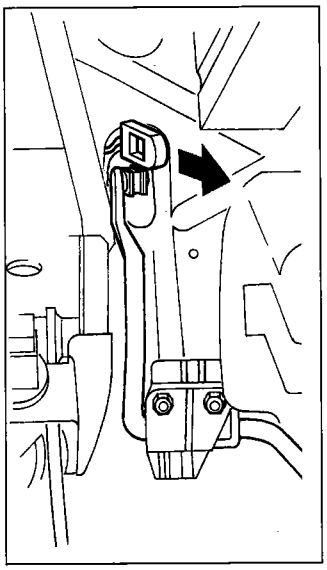

P4F49CJ02

1. Disconnect control cable from its anchorage on the accelerator pedal.

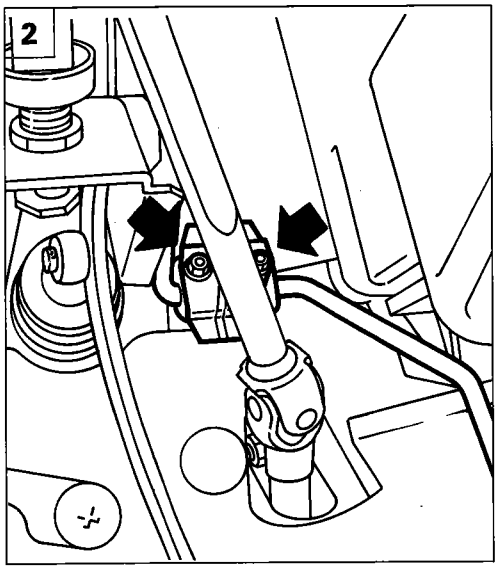

P4F65BJ01

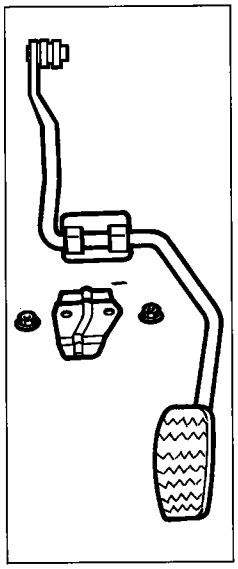

P4F65BJ02

2. Unscrew the nuts shown in the figure and remove the plate fastening the accelerator pedal, then remove the pedal.

Reverse disassembly instructions to refit.

CHECKING ENGINE IDLE SPEED

If engine speed is not 850 ± 50 rpm, because the injection-ignition system is self-regulating, no adjustment can be carried out. It is therefore necessary to check that the accelerator linkage is properly adjusted and then search for the fault through full diagnosis using a Fiat/Lancia Tester.

CHECKING LEVELS OF POLLUTING EMISSIONS

The injection-ignition system is self-adaptive and thus constantly monitors idle speed and CO levels. Therefore there is no need for manual adjustment (adjustment screws are no longer fitted). However, checking exhaust contents downstream of the catalytic converter can provide useful information about the injection-ignition system condition, engine and catalytic converter parameters

Checking CO and HC levels when idling upstream of the catalytic converter

Proceed as follows to check the levels of carbon monoxide (CO) and uncombusted hydrocarbons (HC) upstream of the catalytic converter:

1. Unscrew the plug or nut located on the exhaust pipe, upstream of the catalytic converter, and tighten the tool in its place.
2. Connect the probe of a suitably calibrated CO tester to the tool.
3. Start the engine and allow to warm up.
4. Check that rpm level is as specified.
5 Check that the idling CO level is as specified in the table overleaf. Otherwise check the following:

   - that the Lambda probe is working properly, with the aid of a Fiat/Lancia Tester;
   - for air leaks in the area surrounding the lambda probe seat
   - the injection and ignition system (**particularly for spark plug wear**).

6. Check that HC concentration is less than 600 p.p.m. under the same conditions.
7. If levels are not as specified, tune the engine and check the following in particular:
   - ignition advance;
   - valve clearance;
   - timing;
   - engine compression

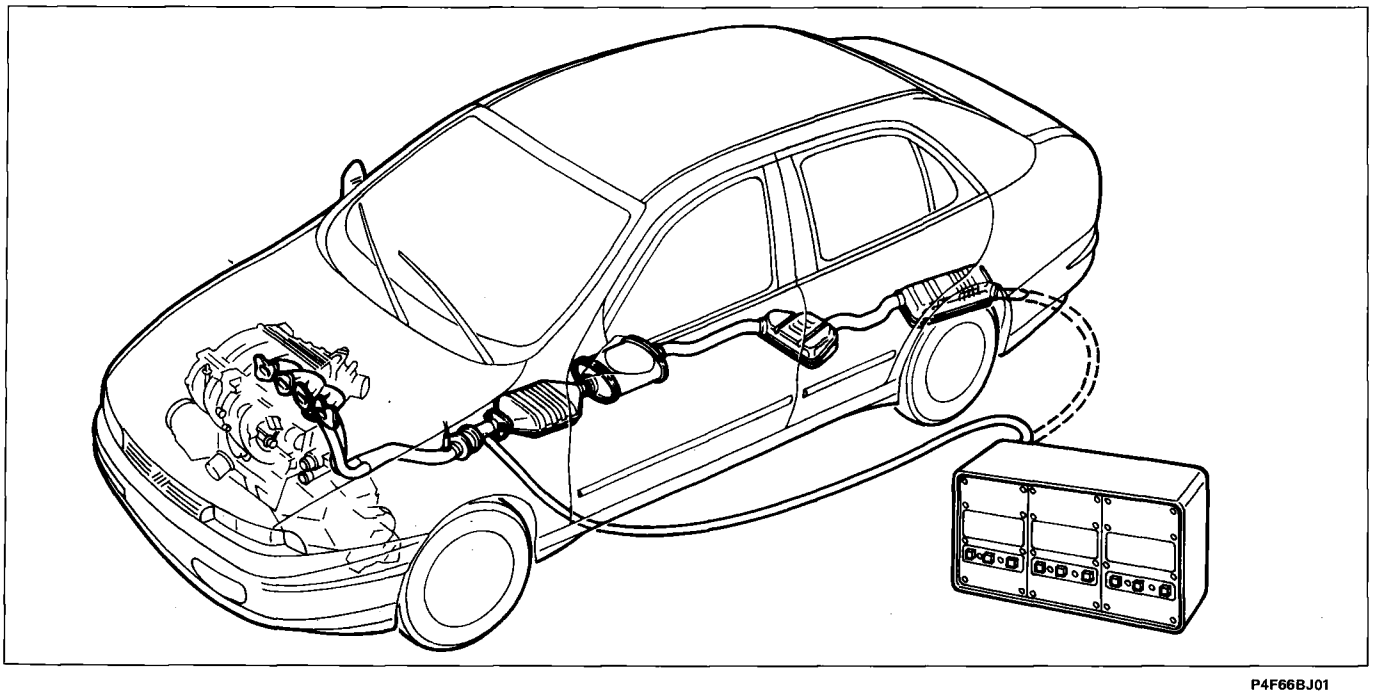

P4F66BJ01

Table showing emission level tolerances	CO (%)	HC (p.p.m.)	CO_2 (%)
Upstream of catalytic converter	0.4 - 1	600	⩾ 12
Downstream of catalytic converter	⩽ 0.35	⩽ 90	⩾ 13

Checking CO and HC levels at exhaust

Measure levels of carbon monoxide (CO) and uncombusted hydrocarbons (HC) at the exhaust by inserting the probe of a suitably calibrated tester to at least 30 cm as indicated in the figure.

If the shape of the exhaust tail pape will not allow the probe to be fully inserted, add an extension pipe designed to ensure a seal in the joint area.

1. Check that CO and HC levels when idling are as specified in the table;

2. If the HC level is not as specified, but the level measured upstream of the catalytic converter is correct, the engine may be considered properly tuned and the cause of the fault probably lies in the catalytic converter.

FAULT DIAGNOSIS

System self-diagnosis

Self-diagnosis aims to reveal faults in the following components:

Actuators

- Injectors
- Idle speed actuator
- Ignition coils
- Vapour recirculation solenoid
- Fiat CODE

SENSORS

- Rpm and TDC sensor.
- Absolute pressure sensor
- Coolant temperature sensor
- Intake air temperature sensor
- Throttle position sensor
- Lambda probe
- Timing sensor

A warning light on the control panel will not necessarily come on if a fault occurs.

If sensors are not working, the system implements signal reconstruction strategies (recovery) in order that engine and catalytic converter can function adequately but without experiencing further damage

In this condition, the vehicle can be driven to a service centre for the necessary repairs.

Once the fault has been corrected, the warning light will go off

Any fault that occurs is memorised temporarily by the system control unit in order to facilitate repairs. When the ignition key is removed, these are transferred to the permanent memory where the can be read by a Fiat/Lancia Tester.

Diagnosis using Fiat/Lancia tester

Connect the Fiat/Lancia Tester (F.L.T.) to a socket beside the ECU.

Information is exchanged between ECU and Tester via two test lines (K e L); the communication protocol follows ISO 8 standards. Line K is two-way while line L is one-directional (from Tester at control unit).

The protocol is Master-Slave type sustained at 4800 baud on K line; dialogue is activated by directing to 5 bits on line L.

The tester must be connected to the electronic control unit as follows:
1. Connect the Fiat-Lancia Tester using «ADAPTER ADT 101 A»
2. Activate TESTER either through the cigar lighter or by connecting directly to the battery (a special extra lead is provided for this purpose).
3. Connect the Tester socket to the test socket.

The Tester is able to perform the following functions:
- Engine parameter display
- Error display
- Active diagnosis

DISPLAYED PARAMETERS

Engine rpm
Injection time
Absolute pressure in inlet manifold
Air temperature
Coolant temperature
Throttle opening angle
Battery voltage
LAMBDA probe status voltage
Engine idle speed actuator
Self-adaptability
Vehicle speed
Mixture level
Petrol vapour solenoid
Lancia CODE

List of errors

RPM sensor	A.C-D.C.
Throttle potentiometer	A.C-D.C.
Absolute pressure sensor	A.C-D.C.
Air temperature sensor	A.C-D.C.
Coolant temperature sensor	A.C-D.C.
Battery	Power supply > 15.5V
	Power supply < 5V
Lambda probe	Status not plausible
Injector	(probe disconnected or faulty)
Ignition coils	C.C
	A.C-D.C.
Idle speed actuator	A.C-D.C.
Fuel vapour solenoid	No. of subsequent steps
Actuator relays	A.C-D.C.
	A.C-D.C.
Control unit	Microprocessor or ECU memory faults are indicated.
Self-adaptive parameters	Indication displayed when ECU self-adaptive limits reached. This indication means that engine conditions are much too far from specified levels and mechanical causes should also be investigated.
Timing sensor	A C D.C.
Speed sensor	Signal absent
Signal framework	Tooth count incorrect - Space between two missing teeth not recognised
Mixture level	Greater than maximum threshold
	Lower than minimum threshold
Fiat CODE	Code not recognised or not received

Active diagnosis
The Fiat/Lancia Tester can be used to run the following tests:
- Petrol pump
- Injectors
- Ignition coils
- Fuel vapour control solenoid
- Air conditioner
- Rev counter
- Engine idle speed actuator
- Error deletion

Recovery
In the event of sensor malfunction, the ECU replaces the value transmitted by the sensor with a 'Recovery' value. This is stored in the ECU for use in the case of certain faults or may be reconstructed approximately on the basis of other available information, thus allowing the vehicle to be driven to a service centre.
The value is also relayed to the Fiat/Lancia tester, and therefore it should be noted, when diagnosing, that in the event of a malfunction, the Fiat/Lancia tester indicates an error in the affected sensor and displays the recovery value.

Permanent memory
The control unit has a permanent memory, that keeps a record of the error even after its cause has been eliminated, or after the key has been turned to STOP; and a temporary, volatile memory (RAM), which loses error details as soon as the underlying cause has been removed.

This also makes it easier to identify errors of an intermittent nature
Before ending diagnosis, the contents of the "permanent" memory must be deleted using the Fiat/Lancia tester in Active Diagnosis mode.
Otherwise, when reconnected, the tester will still display errors from a previous diagnosis.
The "permanent" memory contents can be erased in the following ways:
1 - Using Fiat/Lancia tester in active diagnosis mode
2 - When the cause of the error no longer exists and the engine has been started 5 times (running for not less than 20 minutes), leaving at least 2 minutes between one start-up and the next.

Disconnecting the control unit from the system, even for a long period, does not delete the "permanent" memory.

HITACHI INTEGRATED INJECTION/IGNITION SYSTEM 1
- Introduction 1
- **Injection/ignition system operational diagram** 2

SYSTEM MANAGEMENT STRATEGIES 3
- Management of the signals 3
- Management of the injection 4
- Management of the engine immobilizer function (Fiat CODE)
- Management of the ignition 8
- Management of the engine idle control 11
- Management of the fuel vapour recirculation 11
- Management of the radiator fan 12
- Management of the climate control system 14
- Management of the fault diagnosis 14

Diagram showing information entering/ leaving the Hitachi injection/ignition controlunit and sensors/actuators 15

Diagram showing air intake circuit 16

Diagram showing fuel supply circuit 17

Diagram showing fuel anti-evaporation circuit 18

Diagram showing recirculation of gas-es coming from the engine crankcase (blow-by) 19

Engine exhaust assembly diagram 20

Location of injection/ignition system components in the engine compartment 21

Injection/ignition system wiring diagram 22

INJECTION/IGNITION SYSTEM RELAYS AND FUSES 23

EARTH POINTS 24

INJECTION/IGNITION SYSTEM COMPONENTS 24
- Injection/ignition system wiring 25
- Injection/ignition sytem electronic control unit 25
- Engine rpm sensor 27
- Timing sensor 29
- Air flow meter 30
- Engine coolant temperature sensor 32
- Butterfly casing 33
- Engine idle speed adjustment solenoid valve 34
- Butterfly position sensor 35
- Fuel manifold 36
- Fuel pressure regulator 36
- Electric fuel pump 37
- Fuel filter 37
- Injectors 38
- Charcoal filter and fuel vapour cut out solenoid valve 39
- Multi-purpose valve and safety and ventilation valve 40
- Inertia switch 40
- Ignition power module 41
- Ignition coils 42
- Vehicle speed sensor 43
- Detonation sensor 44
- Lambda sensor 45

CHECKS, ADJUSTMENTS AND REPAIR OPERATIONS ON THE HITACHI SYSTEM 46
- Removing-refitting butterfly casing 46
- Fuel circuit pressure checks 47
- Removing-refitting accelerator cable 49
- Removing-refitting accelerator pedal 49
- Removing-refitting fuel tank 49
- Adjusting accelerator cable 50
- Checking concentration of emissions 50
- Checking engine idle speed 51
- Checking ignition advance 51

DIAGNOSIS 52
- Parameters displayed 52
- Detecting and cancelling faults 53
- Activating the actuators 53

Copyright by Fiat Auto

HITACHI INTEGRAED INJECTION/IGNITION SYSTEM

Introduction

The HITACHI system fitted on the 1746 i.e. 16v version belongs to the category of static advance digital electronic ignition systems integrated with timed, multiple intermittent type electronic fuel injection systems.
This system has only one control unit, a single set of wiring and one series of joint sensors for both systems.

Its function is to inject the exact quantity of petrol designed to mix with the air introduced into the cylinder, into the engine inlet manifold, upstream of the inlet valves, in order to obtain the correct mixture strength.

The HITACHI system guarantees smooth operation making it possible to achieve optimum performance and fuel consumption and a reduction in harmful emissions through a response in real time to the different engine operating conditions.

The system is capable of detecting the following parameters by means of appropriate sensors:

1. the instant engine rotation speed;
2. the position of each pair of pistons in relation to TDC for cylinder 1;
3. the air flow rate drawn in by the engine;
4. the position and the variation speed of the accelerator butterfly;
5. the temperature of the engine coolant;
6. the effective mixture strength (through the Lambda sensor signal);
7. the possible presence of detonation;
8. the speed of the vehicle;
9. the battery voltage;
10. the engagement of the climate control compressor (where fitted).

This information, usually in analogue format, is converted into digital signals by the analogue/digital converters (A/D) in order to be used by the control unit.
In particular, each engine operating condition is identified, moment by moment, by two parameters:

- the engine rotation speed, measured in rpm;
- the engine load, which is basically made up of the quantity of air drawn in by each cylinder.
  This quantity is calculated on the basis of the air flowrate effectively drawn in by the cylinders and represents the volumetric efficiency of the engine.

NOTE *The HITACHI injection/ignition system does not require any adjustments as it is the self-regulating and self-adjusting type.*

NOTE *In the drawings and the diagrams, the numbers indicate the corresponding HITACHI engine control unit pins.*

NOTE *All the connectors are seen from the side opposite the cable inlet.*

Copyright by Fiat Auto

DIAGRAM SHOWING OPERATION OF HITACHI INJECTION/IGNITION SYSTEM

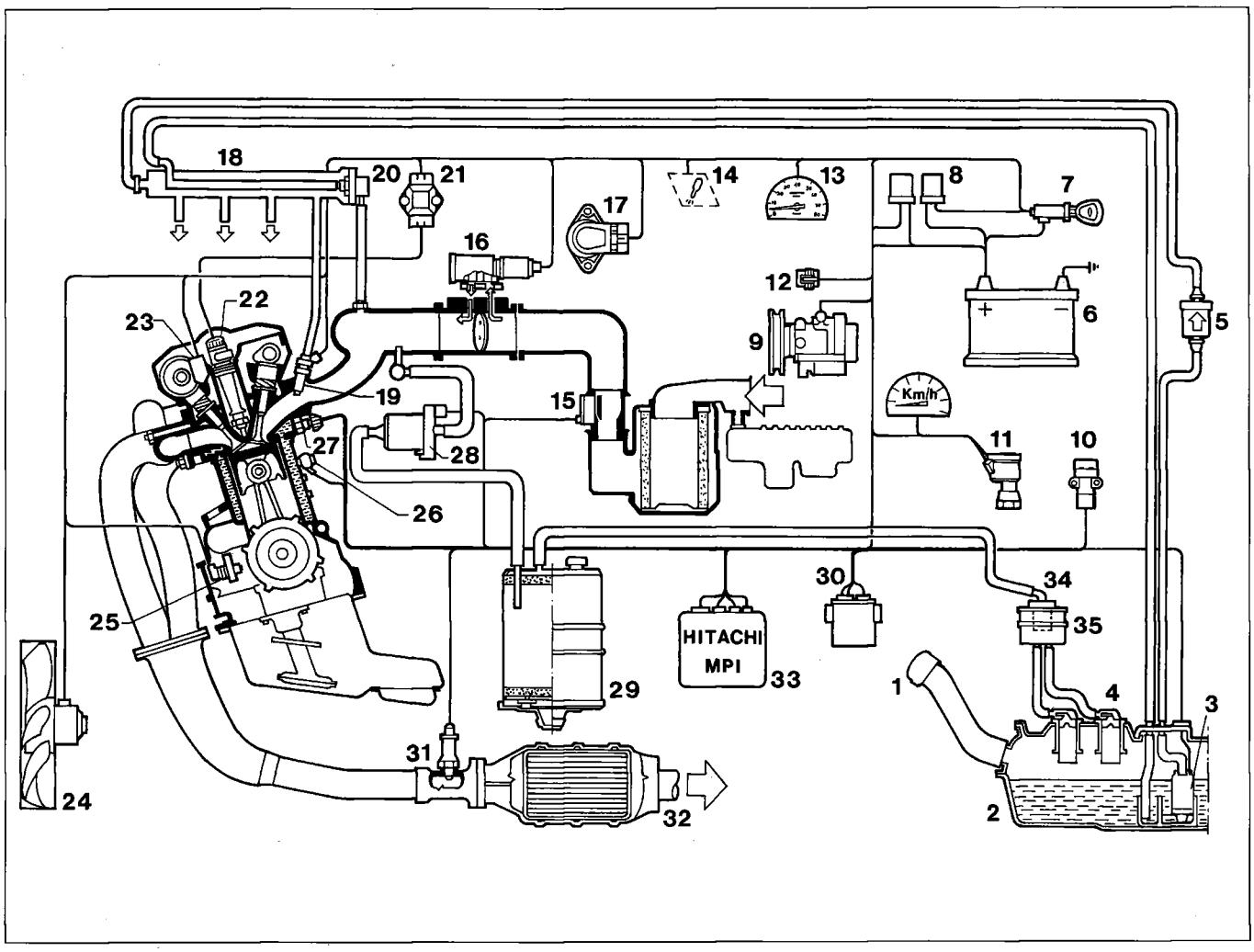

P4F02CJ01

1. Capo with safety valve
2. Fuel tank
3. Electric fuel pump
4. Float valve
5. Fuel filter
6. Battery
7. Ignition switch
8. System relays
9. Climate control compressor
10. Inertia switch
11. Vehicle speed sensor
12. F/L Tester connector (diagnostic socket)
13. Rev counter
14. System failure light
15. Air flow meter
16. Engine idle adjustment solenoid valve
17. Butterfly position sensor
18. Fuel manifold with integrated pressure regulator
19. Injectors
20. Fuel pressure regulator
21. Ignition power module
22. Ignition coil
23. Engine timing sensor
24. Radiator fan
25. Engine rpm sensor
26. Detonation sensor
27. Coolant temperature sensor
28. Fuel vapour cut out solenoid valve
29. Charcoal filter
30. Fiat CODE control unit
31. Lambda sensor
32. Catalytic silencer
33. HITACHI engine control unit
34. Multi-purpose valve
35. Fuel vapour separator

SYSTEM MANAGEMENT STRATEGIES

There is a management prorgramme (software) inside the control unit memory which is composed of a series of strategies, each of which manages a specific system control function.
By using the information (input) supplied by the various sensors, each strategy processes a series of parameters, based on the data maps stored in special areas of the control unit memory and then operates the system actuators (output) which are devices which allow the engine to function, such as:

1. injectors
2. ignition coils;
3. solenoid valves implementing the different functions;
4. electric fuel pump;
5. control relays.

In addition to controlling the moment of ignition at the various engine speeds, in order to allow the engine to run smoothly as the loads applied vary, the management strategies have to control and manage the moment of ijection so that the stoichiometric ratio (air/fuel) is always within the optimum limit.

The system management strategies are basically as follows:
-management of the signals
-management of the injection;
-management of the engine immobilizer function (Fiat CODE);
-management of the ignition;
-management of the engine idle control;
-management of the fuel vapour recirculation;
-management of the radiator fan;
-management of the climate control system;
-management of the fault diagnosis.

MANAGEMENT OF THE SIGNALS

During starting, the control unit recognizes the timing of the injection and the ignition, which are vital for the subsequent operation of all the strategies.
This recognition is implemented on the basis of the interpretation of the order of signals coming from the rpm sensor and from the engine timing sensor.

NOTE *The term signals refers to the collection of signals coming from the sensor on the crankshaft and the one on the camshaft which, featuring a precise reciprocal position, provide the control unit with a synchronized sequence of signals, which the control unit is capable of recognizing.*

In particular, the signals are made up as follows:
- flywheel on the crankshaft: it is equipped with two symmetrical groups of teeth, arranged at 10°, 65° and 97° in advance of each TDC, respectively;
- wheel on the camshaft: it is equipped with two long inspection windows and a short one, wide enough and positionedin such a way as to provide the signal as shown in the diagram.

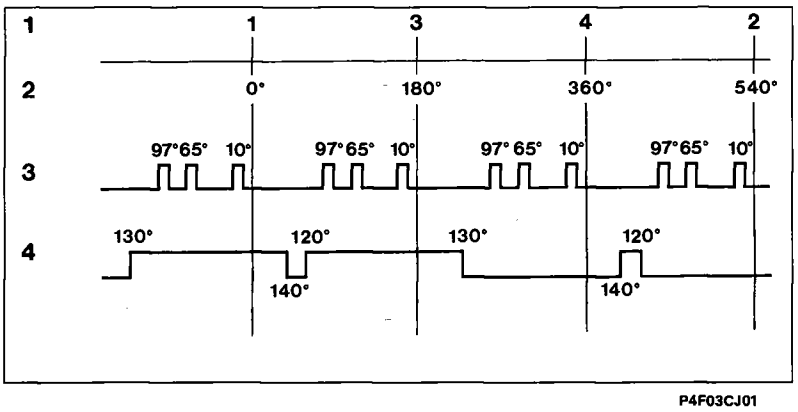

P4F03CJ01

1. Cylinder TDC
2. Crankshaft angles
3. Crankshaft flywheel signal (engine rpm sensor)
4. Camshaft wheel signal (engine timing sensor)

NOTE *The angular values for the signals (3) and (4), indicate the crankshaft advance angles in relation to the next TDC.*

MANAGEMENT OF THE INJECTION

The injection management strategies are designed to provide the engine with the correct quantity of fuel at the desired moment according to the engine operating conditions.

The injection of fuel in this system is the timed, sequential type for each cylinder; the moment of injection (sending the fuel into the inlet ducts by opening the injectors) is not simultaneous for all the cylinders, but takes place for each cylinder at the optimum injection point, calculated by the control unit following special maps according to the engine load and speed conditions.

NOTE *The presence of the air flow meter allows the direct measurement of the mass of air drawn in (and not the volume) thereby eliminating problems of temperature, altitude, pressure, etc. and rendering the presence of the air intake and absolute pressure sensors in the system superfluous.*

The management of the injection basically consists of calculating the injection time, determining the injection timing and the subsequent implemention by operating the injector.
The "basic" injection time depends on the characteristics of the injector and corresponds to the quantity of fuel to be injected into each cylinder. The latter is, in turn, determined by multiplying the quantity of air drawn in by each cylinder (calculated on the basis of the quantity of air drawn in and the engine rotation speed) for the type of mixture desired in relation to the engine operating point.
The final injection time is determined by means of a calculation algorhythm where the "basic" injection time is corrected by a series of coefficients which take into account the different engine operating condtions which are shown by the various sensors in the system.

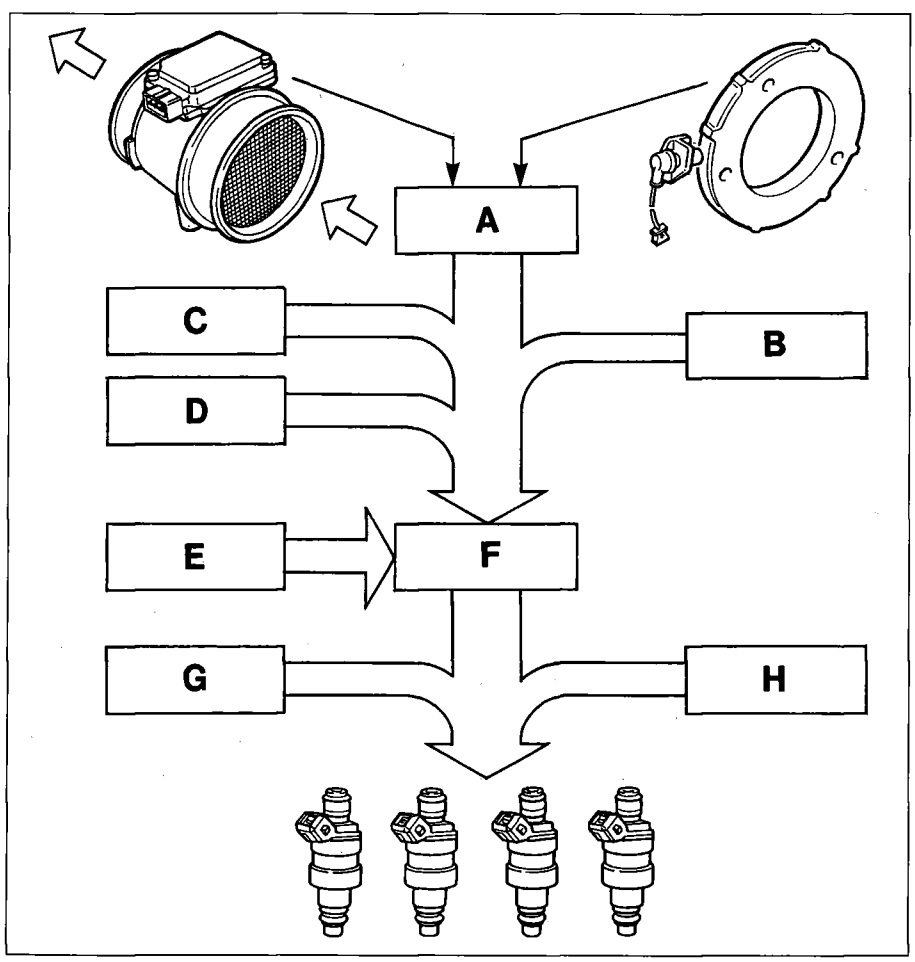

P4F04CJ01

A: "basic" injection time
B: corrective coefficients:
- low engine temperature
- high engine temperature
- starting and post-starting.
- butterfly completely open
- deceleration
- acceleration

C: checking mixture strength self-adjustment
D: cut-off
E: intermediate injection time
F: extra-pulse
G: non timed management of
H: the injection

Controlling the mixture strength

NOTE *The ratio for the mixture is defined and indicated by the Greek letter α (alfa):*

$$\alpha = \frac{\text{quantity of air drawn in by the engine}}{\text{quantity of fuel injected}}$$

The stoichiometric mixture strength ratio is indicated by the α_{st}:

$$\alpha st = \frac{\text{theoretical quantity of air required to burn all the fuel injected}}{\text{quantity of fuel injected}}$$

The mixture strength is indicated by the Greek letter λ (lambda):

$$\lambda = \frac{\text{quantity of air drawn in by the engine}}{\text{theoretical quantity of air required to burn all the fuel injected}}$$

It can easily be deduced that $\alpha / \alpha_{st} = \lambda$.
The stoichiometric ratio depends on the type of fuel: for current unleaded petrols this is around 14.7 - 14.8, which corresponds to a Lambda figure = 1 (ratio 14.8 : 1 meaning that 14.8 parts of air are needed to burn 1 part of petrol).
There is talk of the mixture being *rich* when the quantity of air is below the stoichiometric quantity and in this case the Lambda <1
there is talk of the mixture being *poor* (or *weak*) when the quantity of air is higher than the stoichiometric amount and in this case the Lambda >1
The strategy has the function of correcting the "basic" injection times so that the mixture strength constantly oscillates at a high frequency between 0.98 and 1.02.
The oscillation frequency varies according to the engine load and speed: it is in the order of tens of Hertz .

NOTE *1 Hz = 1 oscillation per second*

In the following conditions:
- cut-off,
- butterfly opening above 70°,
- engine temperature below 25°C,

the strategy is disabled.

Self-adjustment

The control unit is equipped with a self-adjustment function which has the task of memorizing possible differences between the basic map and corrections imposed by the Lambda sensor which may occur persistently during operation. These differences (due to the ageing of the system and engine components) are permanently memorized, allow the adjustment of the system operation to the gradual alterations of the engine and the components compared with the characteristics when new.
The strategy is disabled whilst the fuel vapour cut out solenoid valve is open.
If the control unit is replaced, the vehicle must be road tested allowing the engine to reach operating temperature and the control unit to intervene in the self-adjustment mode (above all during idling stops).

Copyright by Fiat Auto

Starting and post-starting

During starting, it is not possible to recognize the engine timing and consequently it is not possible to implement the injection timing.
During the first engine rpm an intial simultaneous (full group) injection is carried out because the considerable flucutations of the engine speed do not allow the correct calculation of the injection timing; the injection only becomes the timed type later on.
The "basic" injection time is increased by a multiplication coefficient for the entire time the engine is driven by the starter motor.
When the engine is started up, the coefficient is gradually reduced until it disappears at a given time; the lower the engine temperature, the longer the time.

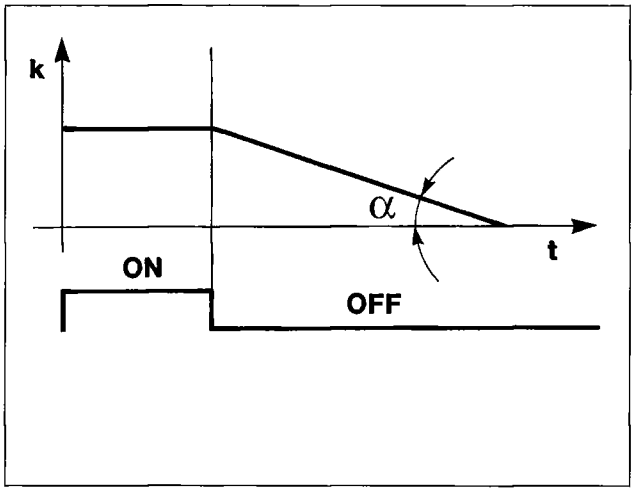

P4F06CJ01

k: enrichment coefficient
t : time
α: engine temperature function decrease
ON : engine driven (crank)
OFF : engine started (run)

Operation when cold

In these conditions there is a natural weakening of the mixture as a result of the turbulence of the particles of fuel at low temperatures, reduced evaporation and strong condensation on the internal walls of the inlet manifold, all of which is exacerbated by the increased viscosity of the lubricant oil which, at low temperatures, increases the rolling resistance of the engine mechanical components.

The electronic control unit recognizes this condition and corrects the basic injection time according to the coolant temperature signal.

As a result:

- At very low temperatures, the injector remains open longer (tj) diagram (b), with a low air/petrol ratio (rich mixtures).
- The more the engine temperature increases, the shorter the injector opening time, (tj) diagram (a), consequently the greater the air/petrol ratio (weak mixtures).

Whilst the engine is warming up, the electronic control unit also operates the engine idle solenoid valve which determines the quantity of air required to ensure that the engine speed is sustained.

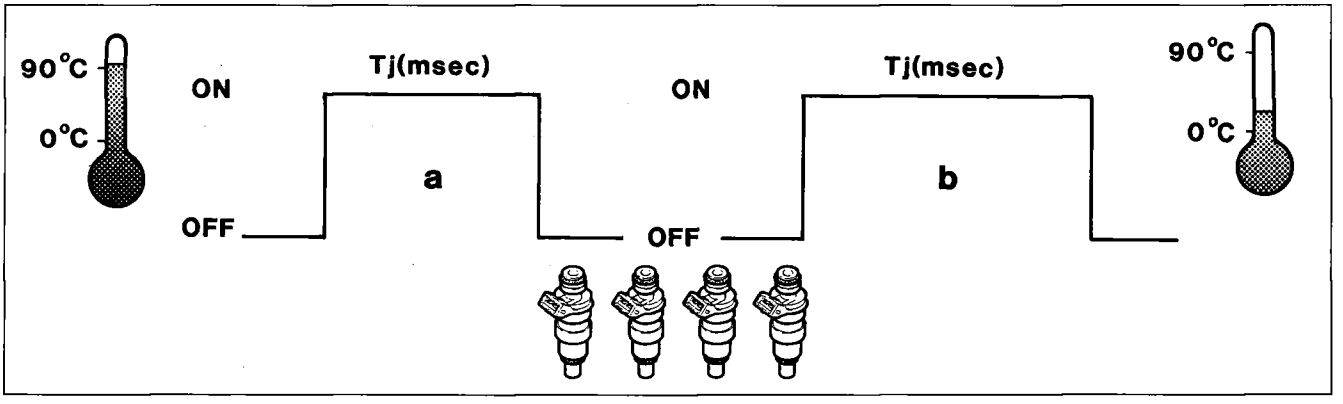

P4F06CJ02

Operation in full load conditions

In full load conditions it is necessary to increase the basic injection time to achieve the maximum power supplied by the engine.

The strategy is enabled when the butterfly opening exceeds 70°.
The "basic" injection time is multiplied by a coefficient (function of the engine speed) equal to around 1.1.

Operation in acceleration conditions

During this stage, the control unit increases the quantity of fuel supplied.
The "basic" injection time is multiplied by a coefficient which is a function of the engine temperature and the opening speed of the accelerator butterfly (average value 1.2).
If the brisk variation of the injection time is calculated when the injector is already closed, the control unit opens the injector once again (extra pulse), in order to be able to adjust the mixture strength as quickly as possible: the subsequent injections are increased on the basis of the coefficients mentioned previously.

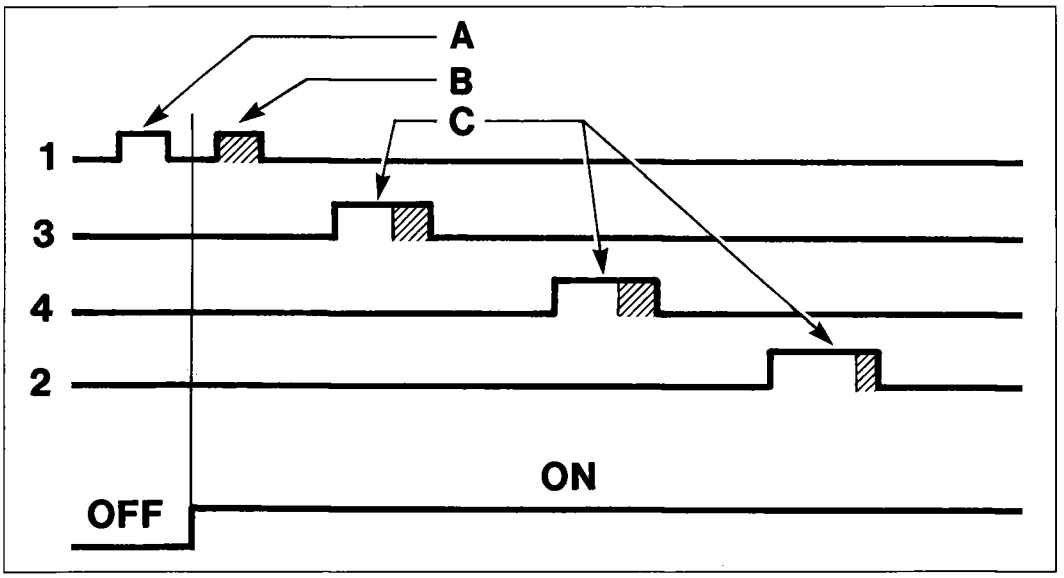

P4F07CJ01

A: normal injection time
B: injector re-opening (extra-pulse)
C: injection time including enrichment
OFF: engine at stationary speed
ON: engine in transition

Operation in deceleration conditions

During this stage a negative transition strategy is implemented to decrease the quantity of fuel supplied: the "basic" injection time is multiplied by a coefficient which depends on the temperature of the engine, the speed and the load conditions at the moment immediately preceding the start of the deceleration.

Operation in cut-off conditions

The cut-off strategy (fuel cut-off) is implemented when the control unit recognizes that the butterfly is in the idle position (signal from the butterfly potentiometer) and the engine speed is above 1600 rpm (with the engine warm).
The engine supply is re-enabled when the butterfly is recognized to be in a not closed position or when the speed goes below 1200 rpm (with the engine warm).

Rotation speed restricter

The strategy limits the maximum speed which the engine can reach by enabling the cut off gradually, as shown in the table.
Maximum speed: 6550 rpm

modes \ cylinders	1	2	3	4
1 cylinder	●			
2 cylinders	●			●
3 cylinders	●		●	●
4 cylinders	●	●	●	●

Electric fuel pump operation

The electric fuel pump is operated by the engine control unit through a relay.
The pump cuts out:
- if the engine goes below 50 rpm;
- after a certain period (around 5 seconds) with the ignition switch in the ON position without the engine being started up (timed go ahead);
- if the inertia switch has intervened.

Operation of the injectors

The operation of the injectors is the timed, sequential type. However, during starting the injectors are operated a first time in parallel.
The timing of the injector operation varies according to the engine speed.

MANAGEMENT OF THE ENGINE IMMOBILIZER FUNCTION (FIAT CODE)

The system is equipped with an "anti-theft device" which stops the engine from being started. This function is achieved thanks to the presence of a special control unit (Fiat CODE), capable of dialogue with the injection/ignition control unit, and an electronic key, equipped with a special transmitter for sending a recognition code.
Each time the key is turned to the OFF position, the Fiat CODE system completely deactivates the injection/ignition control unit.
When the key is turned to the ON position, the following operations take place in the order given:
1. the injection/ignition control unit (whose memory contains a secret code) sends the Fiat CODE control unit a request to send the secret code to deactivate the immobilizing function;
2. the Fiat CODE control unit responds by only sending the secret code after having, in turn, received the recognition code transmitted by the ignition key;
3. the recognition of the secret code allows the deactivationof the injection/ignition control unit immobilizing function and its normal operation.

NOTE *Given the presence of the Fiat CODE system* **DO NOT CARRY OUT**, *during the fault diagnosis and/or during operational tests, tests using another injection/ignition control unit. In effect, in such a case the Fiat CODE control unit would transfer the (unrecognized) recognition code to the test control unit which could not then be used on other vehicles.*

MANAGEMENT OF THE IGNITION

The ignition system is the static advance inductive discharge type, (i.e. without the high tension distributor).
The system has a single coil for each spark plug; the advantages of this solution are:
- less electrical overloading
- guarantee of constant discharge at each spark plug

The ignition management strategies have the aim of striking the spark with the desired advance depending on the engine operating conditions.

The management of the ignition basically consists of determining the ignition advance and implementing it by operating the power module, located outside of the control unit.
The "basic" advance value, calculated according to the intake air flow rate and the engine speed, is then corrected according to the different engine operating conditions.
The control unit determines the start of the conduction of the current in the coil primary winding on the basis of the engine rotation speed.
This moment, obviously, varies, in terms of the angle, in relation to the explosion TDC for each cylinder and the greater the engine rotation speed, the greater the advance because the time*(dwell)* required to saturate the current in the primary winding is virtually constant.
The conduction starting time is corrected according to the battery voltage.

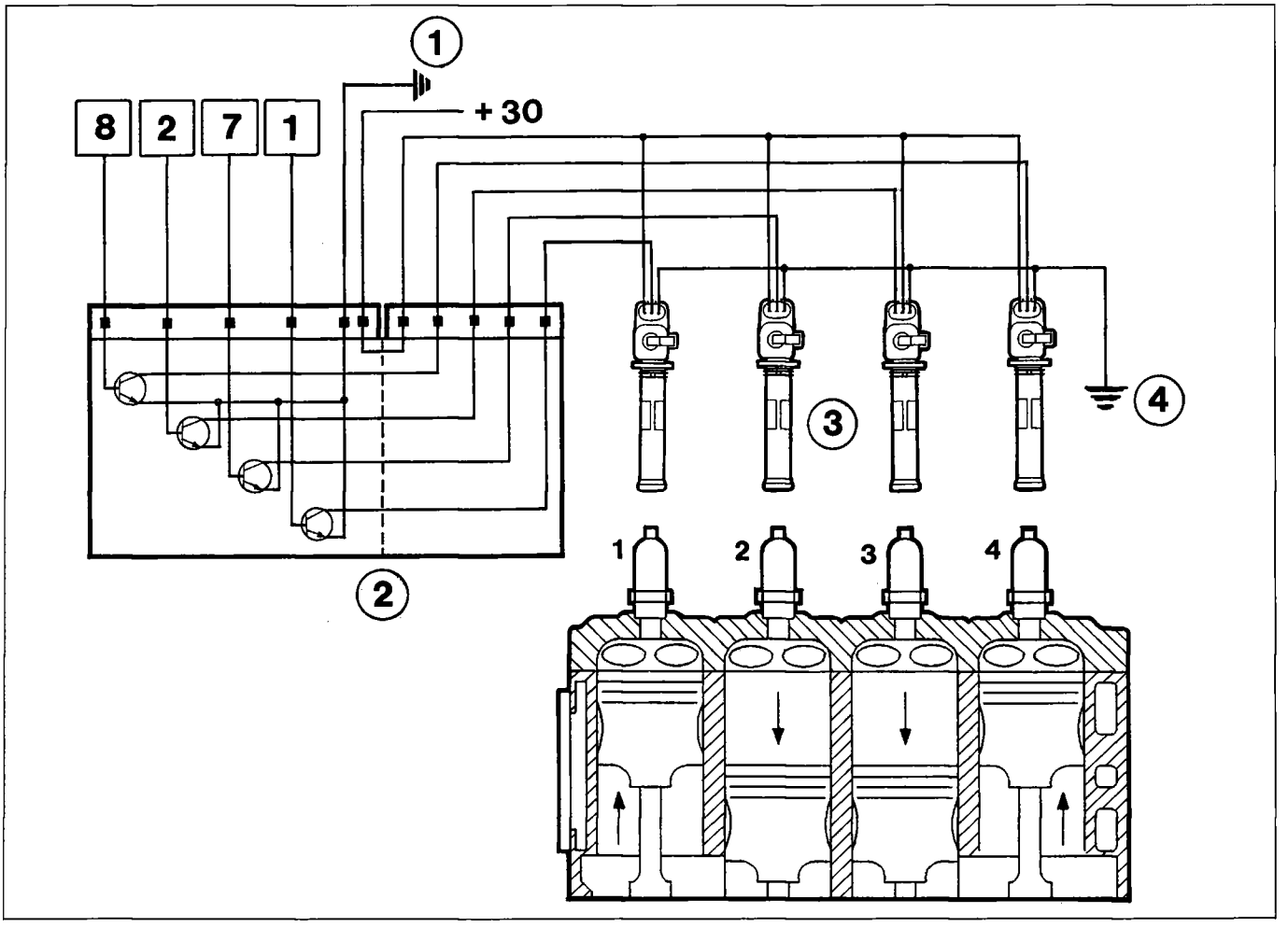

P4F09CJ01

1. Ignition power module earth
2. Ignition power module
3. Single ignition coil (plug-top)
4. Secondary coil earth

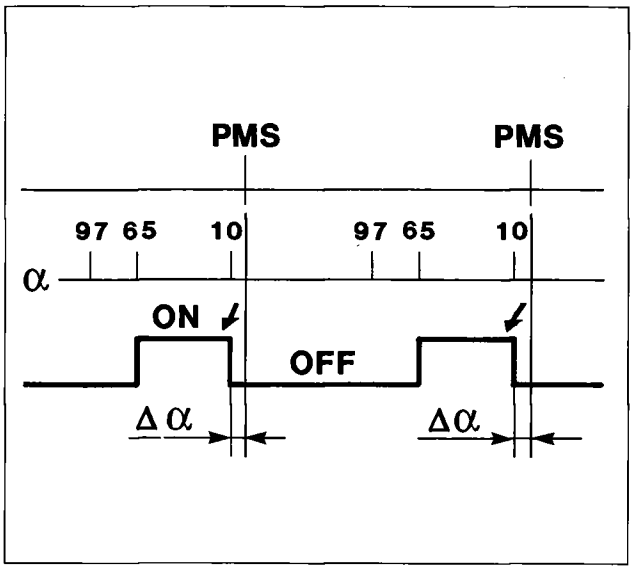

P4F10CJ01

α: crankshaft flywheel signals
Δ α: fixed ignition advance (10° engine)
ON : coil conduction activated
OFF: coil conduction deactivated

Starting

During starting it is not possible to carry out the normal management of the advance because the considerable fluctuations of the rotation speed do not allow the correct calculation of the dwell and the advance.
The advance is therefore managed by taking the following as a reference:
- for the start of conduction, the tooth at 65°;
- for the ignition advance, the tooth at 10°.

The result is a fixed advance of 10° for the entire time the engine is driven by the starter motor.

Operation when cold

When the engine is cold an additional advance correction is implemented: the increase in the advance compared with that in the amp is inversely proportional to the temperature of the engine.

Operation in cut-off conditions

The ignition advance is increased at the entry into cut-off: from the moment the supply of fuel is restored, the advane is gradually returned to the "basic" value.

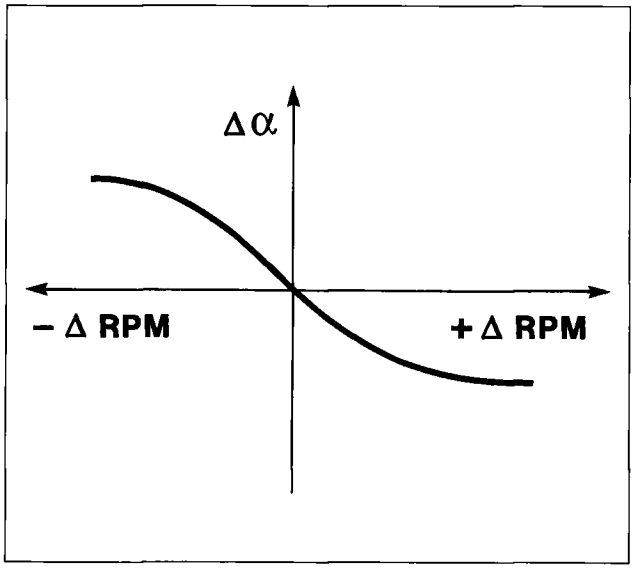

P4F10CJ02

Δ α: correzione anticipo di accensione al minimo
+Δ RPM: il regime al minimo supera quello nominale
-Δ RPM: il regime al minimo o inferiore a quello nominale

Operation with engine idling

When the engine is idling, the management of the advance is implemented independently from the "basic" advance.
The idle advance value, which can vary according to the temperature of the coolant (10° with the engine warm) is corrected according to the variation in the speed compared with the pre-set speed, also a function of the temperature.
In particular, the advance is increased if the speed decreases and decreased if the speed increases in order to ensure the stability of the actual speed.

Control of the detonation

The strategy has the task of detecting the presence of the phenomenon of detonation (engine knock) by processing the signal coming from the appropriate sensor. The strategy constantly compares the signal coming from the sensor with alevel, which is, in turn, constantly updated, to take into account the background noise and the ageing of the engine.
If the system recognizes the presence of detonation, the strategy reduces the ignition advance, proceeding in 2° steps up to a maximum of 6°, until the phenomenon disappears. Then, the advance is gradually restored until the basic value is reached or until the onset of the phenomenon again. In particular, advance increases are implemented gradually, whilst reductions are implemented immediately.

In acceleration conditions, the strategy uses a higher level, to take into account the increased noise of the engine in these circumstances.
The strategy is also equipped with a self-adjustment function which memorizes the advance reductions which could be constantly repeated, in a manner which is not permanent, so that the advance can be adapted to the different conditions in which the engine operates (for example, the use of a low octane rating fuel). The strategy is capable of restoring the advance to the level memorized if the conditions which have produced the reduction disappear.

MANAGEMENT OF THE ENGINE IDLE SPEED

The general aim of the strategy is to keep the engine speed around the value memorized (engine arm: 850 rpm): the position assumed by the engine idle speed adjustment solenoid valve depends on the engine speed and load conditions and the speed of the vehicle.

Starting stage

When the key is inserted, the actuator assumes a position which depends on the temperature of the engine and the battery voltage (open loop position).

Engine started with accelerator pedal released

The engine speed varies according to the temperature of the engine and is kept constant close to this value by altering the position of the shutter to compensate for any fluctuations in the speed.
This takes place, in particular, when external loads are applied (power assisted steering, heated rear windscreen, etcc).
If the electric fans and the air conditioner are switched on, both of which are managed by the control unit, the strategy manages the actuator in advance of this switching on.

Normal driving

In these conditions the actuator is in the open loop position.

Deceleration conditions

In deceleration conditions outside of idle, the control unit controls the position of the actuator through a special curve *(dash-pot curve)*, in other words it slows down the return of the shutter towards its housing, thereby producing a reduction in the braking effect of the engine.

MANAGEMENT OF THE FUEL VAPOUR RECIRCULATION

The strategy controls the position of the charcoal filter solenoid valve in the following way:
- during the starting stage, the solenoid valve remains closed, thereby preventing the fuel vapours from enriching the mixture; this condition continues until the temperature of the engine coolant reaches 25°C;
- with the engine warmed up, the control unit operates the solenoid valve in duty-cycle to control the quantity of fuel vapours sent to the inlet, according to the engine speed and load conditions.

In the following operating conditions:
- butterfly in closed position,
- speed below 1250 rpm,
- engine load TP < 1 ms,

the operation of the solenoid valve is disabled, keeping it in a closed position.

MANAGEMENT OF THE RADIATOR FAN

The control unit directly controls the operation of the radiator fan according to the coolant temperature and whether or not there is a climate control system.

NOTE *Since the temperature of the engine is measured by the appropriate sensor, there is no longer a thermal contact on the radiator.*

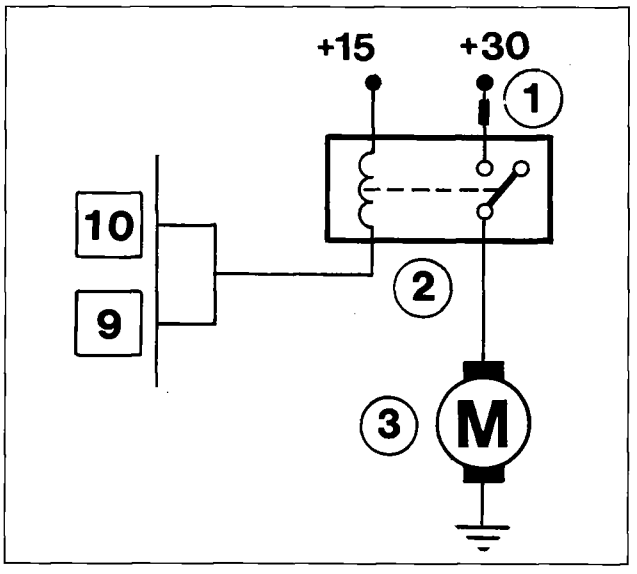

P4F12CJ01

Version without climate control

There is an electric fan which switches on when the temperature of the coolant exceeds 95°C.
It switches off with a hysteresis of 2°C at the temperature level.

1. Fuse
2. Electric fan relay
3. Electric fan

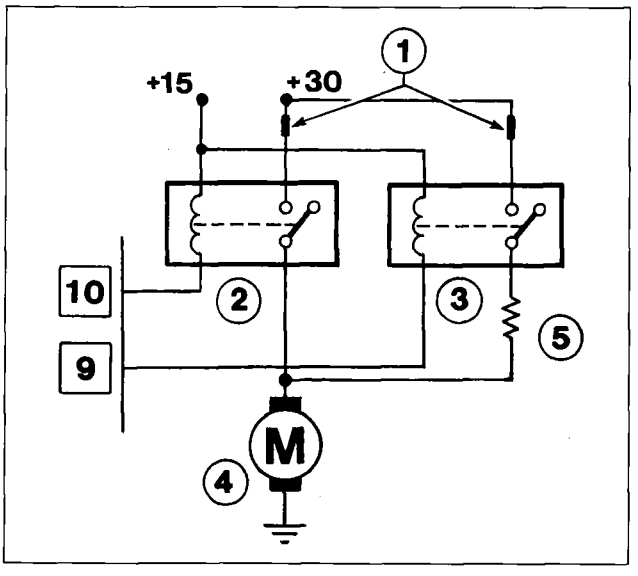

P4F12CJ02

Version with climate control

There is an electric fan with two operating modes:
- low speed,
- high speed.

1. Fuse
2. High speed relay
3. Low speed relay
4. Electric fan
5. Resistance

Operational diagram showing engagement of electric fan for versions with climate control

The graph below illustrates the engagement of the low and high speeds of the radiator cooling fan according to the variation in the engine coolant temperature over a period of time (curve 4).

Low speed: it switches on when the temperature of the coolant reaches 95°C.

High speed: it switches on when the temperature of the coolant reaches 100°C.

The speed of the electric fan also depends on the state of the three stage pressure switch for the climate control system, which determines the engagement of the first speed and, with a certain delay, that of the second and the subsequent switching off.

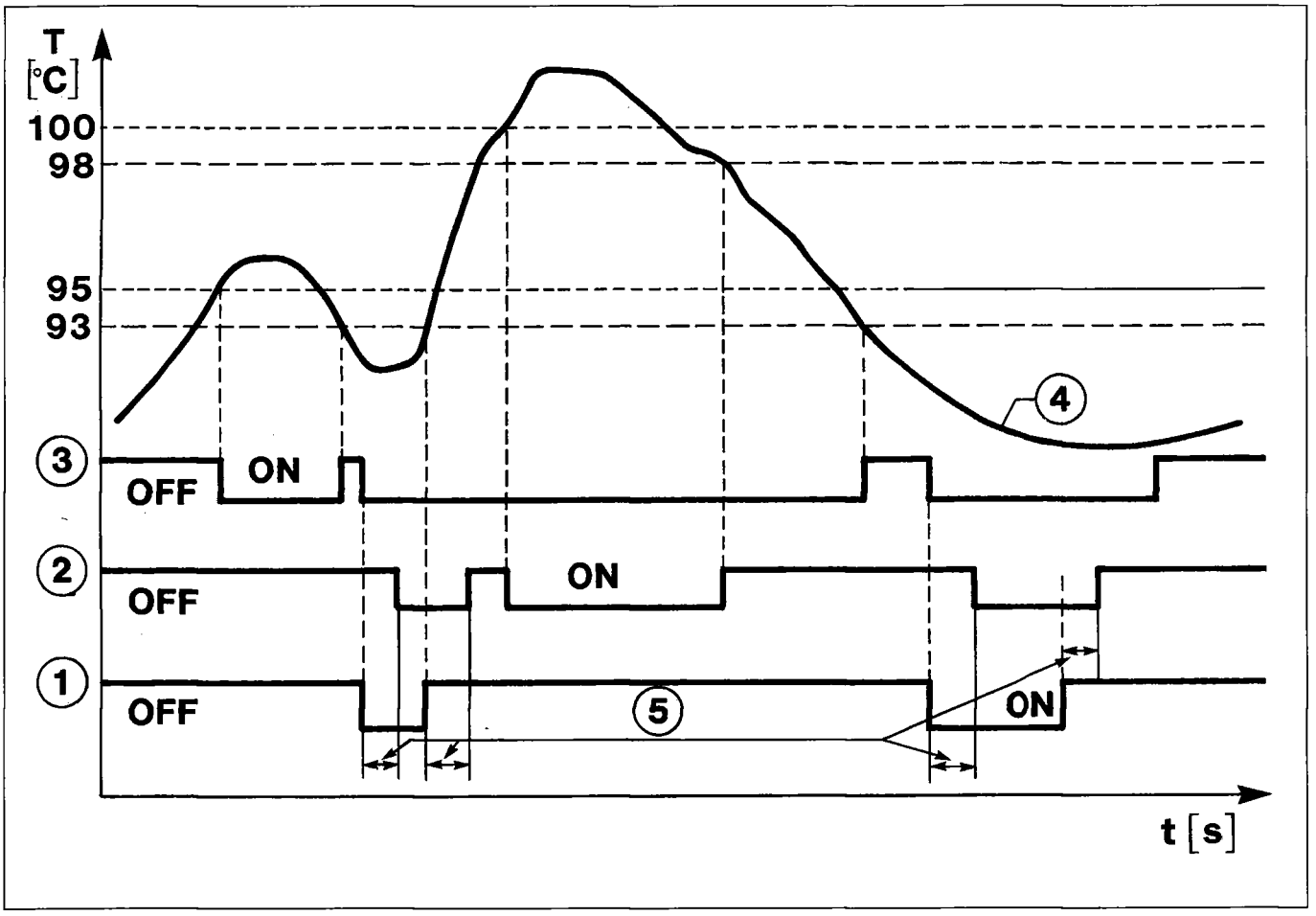

P4F13CJ01

1. State of the three stage pressure switch
2. Operating condition at high speed
3. Operating condition at low speed
4. Progress of the coolant temperature
5. Delay in engaging/disengaging the three stage pressure switch

ON: speed/pressure switch activated
OFF: speed/pressure switch deactivated
T :engine coolant temperature in °C
t :time

MANAGEMENT OF THE CLIMATE CONTROL SYSTEM

The Hitachi injection/ignition control unit is connected to the climate control system, in operating terms, in the following way:

1. it receives the request to switch on the compressor from the climate control unit via pin 28 and implements the appropriate measures (increases the idle speed);
2. it gives the go ahead to switch on the compressor via pin 113, when the conditions set out by the strategies have been ascertained;
3. it receives information concerning the state of the three stage pressure switch from pin 17 and implements the appropriate measures (electric radiator fan operation).

As far as point 1 is concerned, if the engine is idling, the control unit increases the air flow rate passing from the idle actuator in advance of the compressor being switched on and viceversa it returns the actuator to the normal position after the compressor is switched off.
On the other hand, as far as point 2 is concerned, the control unit switches off the compressor automatically:

a) for a period of 6 s (timed disengagement):
- when the butterfly opening is more than 70°,
- when the vehicle is accelerating;

b) as long as following critical conditions exist:
- coolant temperature in excess of 114°C,
- engine idle speed below 750 rpm.

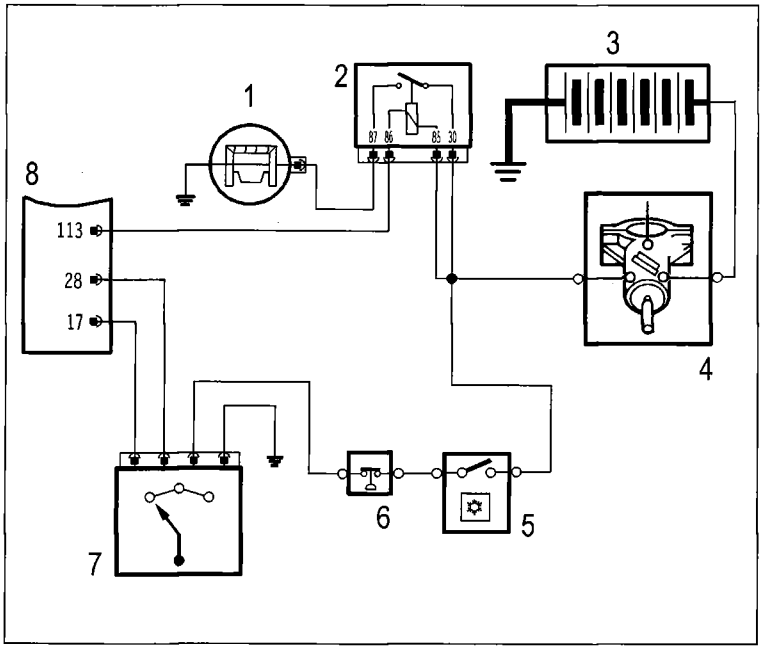

P4F14CJ01

1. Compressor
2. Compressor relay feed
3. Battery
4. Ignition switch
5. Climate control engagement switch
6. Frost sensor
7. Three stage pressure switch
8. Injection/ignition control unit

MANAGEMENT OF THE FAULT DIAGNOSIS

The complete electronic fault diagnosis of the injection/ignition system is obtained by connecting the FIAT/LANCIA TESTER to the diagnostic socket.

The system, however, is also equipped with an autodiagnostic function which recognizes, memorizes and signals a possible failure.

If a failure is detected at the sensors or actuators, the signal reconstruction strategies (recovery) are immediately activated in order to guarantee the operation of the engine at an acceptable level without adversely affecting its operation. It is therefore possible to drive the vehicle to a service centre to have the appropriate operations carried out.

DIAGRRAM SHOWING THE INFORMATION ENTERING/LEAVING THE HITACHI INJECTION/IGNITION SYSTEM CONTROL UNIT AND SENSORS/ACTUATORS

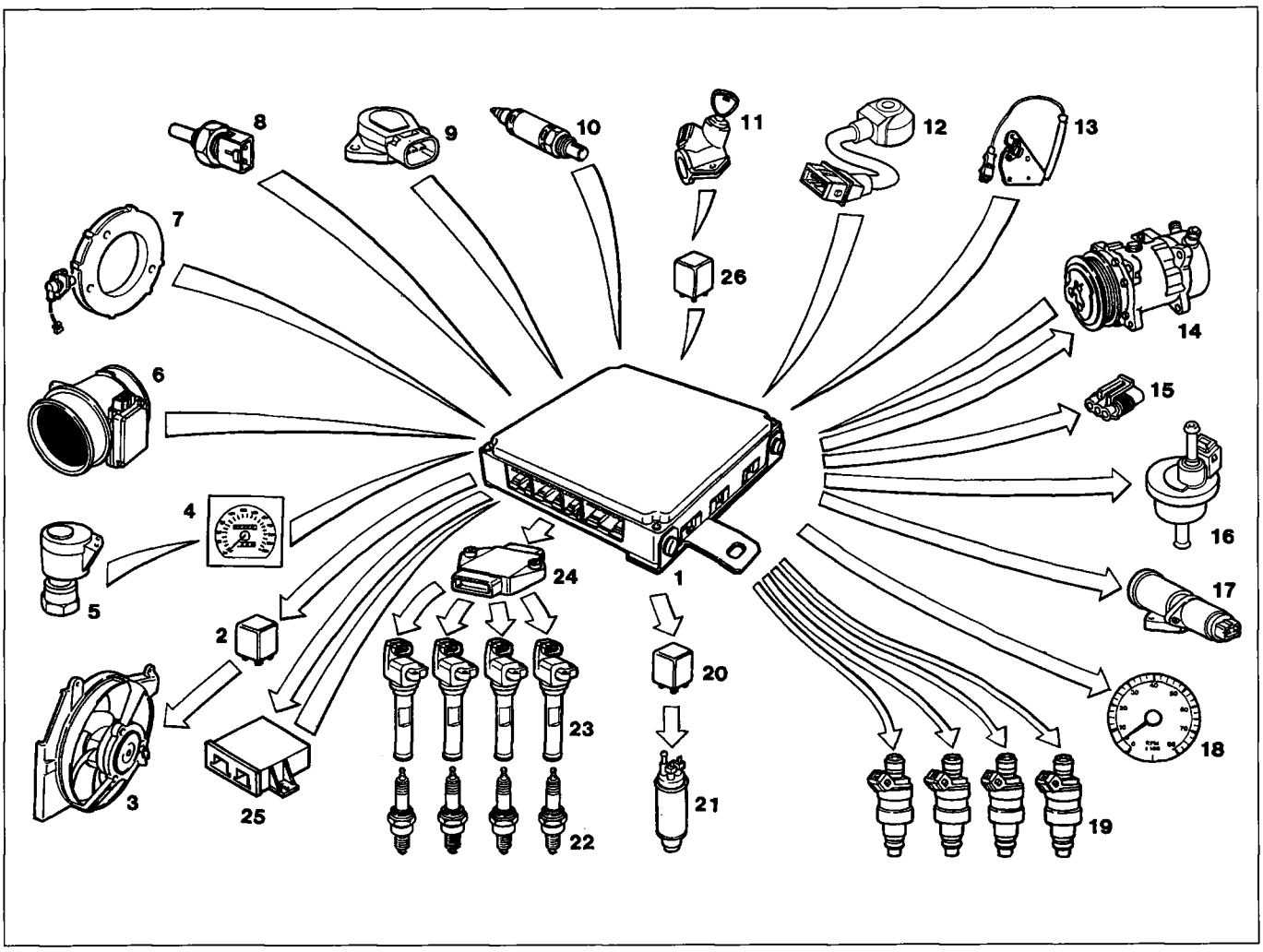

P4F15CJ01

Components key

1. Injection/ignition control unit
2. Radiator fan relay
3. Radiator fan
4. Speedometer
5. Vehicle speed sensor
6. Air flow meter
7. Engine rpm sensor
8. Coolant temperature sensor
9. Butterfly position sensor
10. Lambda sensor
11. Ignition switch
12. Detonation sensor
13. Engine timing sensor
14. Climate control compressor
15. F/L Tester connector (diagnostic socket)
16. Fuel vapour cut out solenoid valve
17. Engine idle speed adjustment solenoid valve
18. Rev counter
19. Injectors
20. Electric pump relay
21. Electric fuel pump
22. Spark plugs
23. Ignition coils
24. Ignition power module
25. Fiat CODE control unit
26. System relay feed

Copyright by Fiat Auto

10.

DIAGRAM SHOWING THE AIR INTAKE CIRCUIT

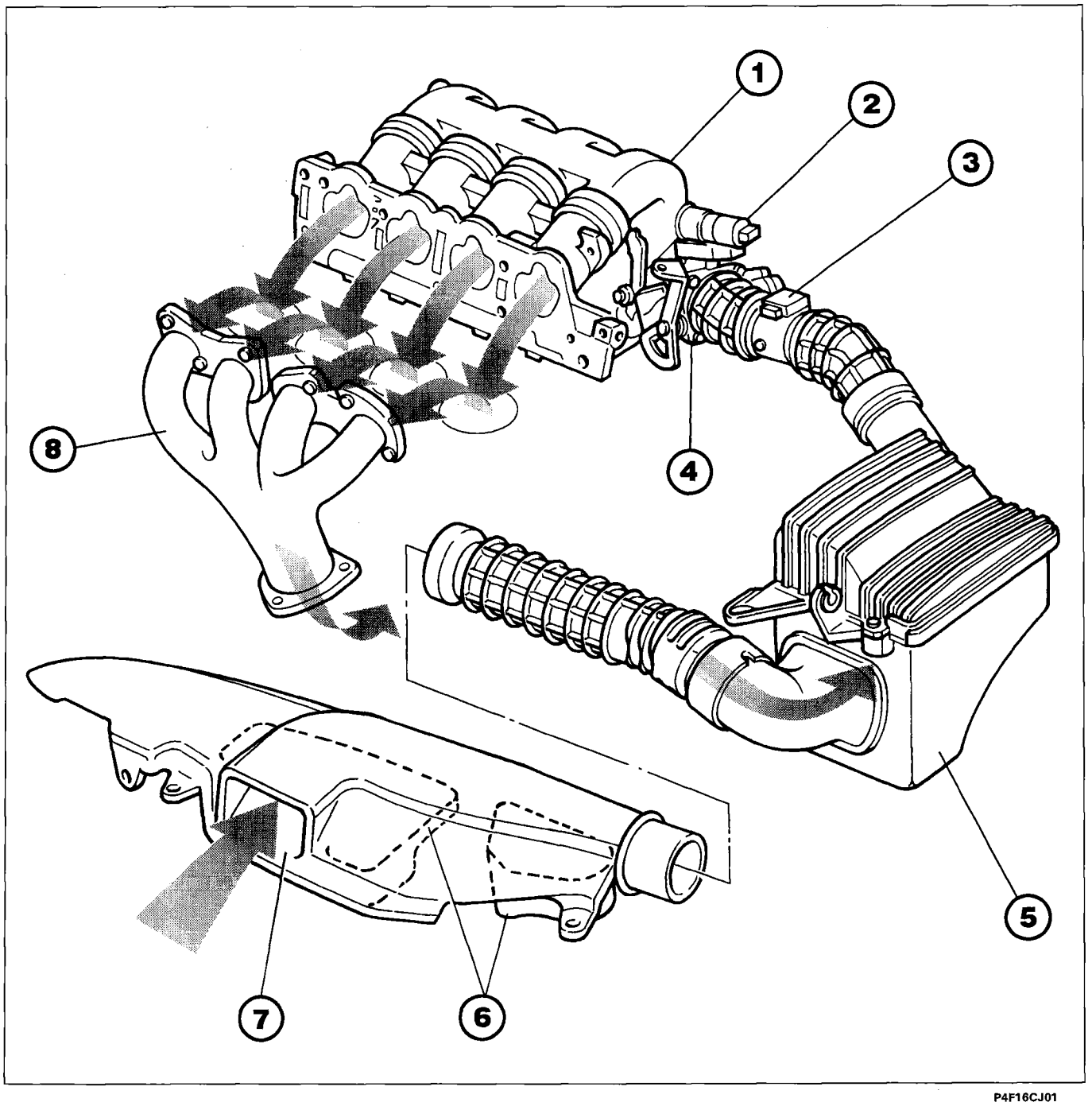

P4F16CJ01

1. Inlet manifold
2. Engine speed adjustment solenoid valve
3. Air flow meter
4. Butterfly casing
5. Air filter
6. Resonators
7. Inlet vent
8. Exhaust manifold

DIAGRAM SHOWING FUEL SUPPLY CIRCUIT

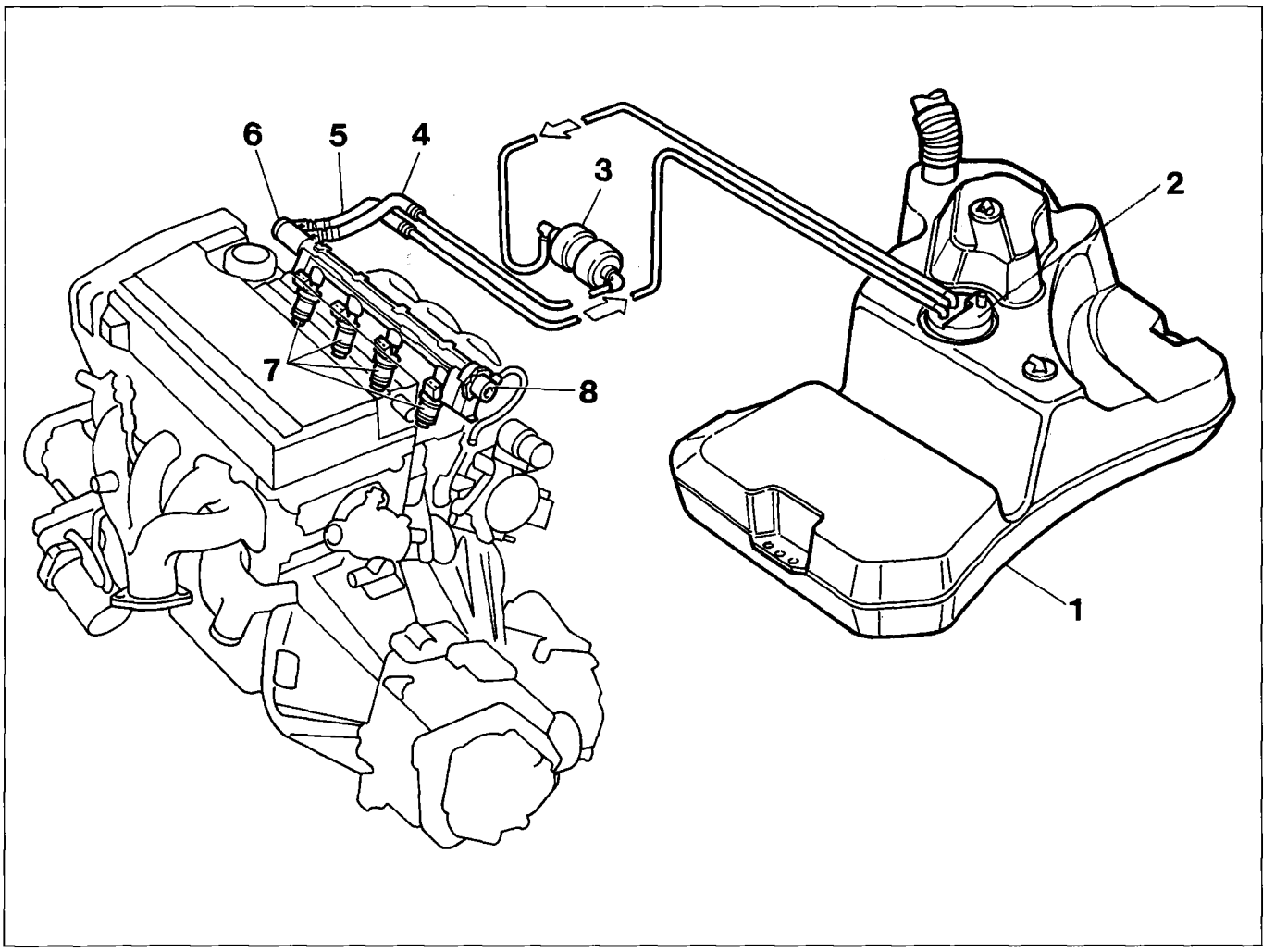

P4F17CJ01

1. Fuel tank
2. Electric fuel pump
3. Fuel filter
4. Fuel supply
5. Fuel return
6. Fuel manifold
7. Injectors
8. Fuel pressure regulator

The supply of fuel is achieved by means of an electric pump immersed in the tank which draws in the fuel and sends it to the filter and consequently to the injectors.

The fuel supply pressure at the injectors is kept constant and proportional to the pressure value in the inlet manifold by the pressure regulator which acts on the fuel flow rate in order to keep the rise in pressure at the injectors constant.

The excess fuel flows from the pressure regulator, not under pressure, to the tank.

Copyright by Fiat Auto

DIAGRAM SHOWING FUEL ANTI-EVAPORATION CIRCUIT

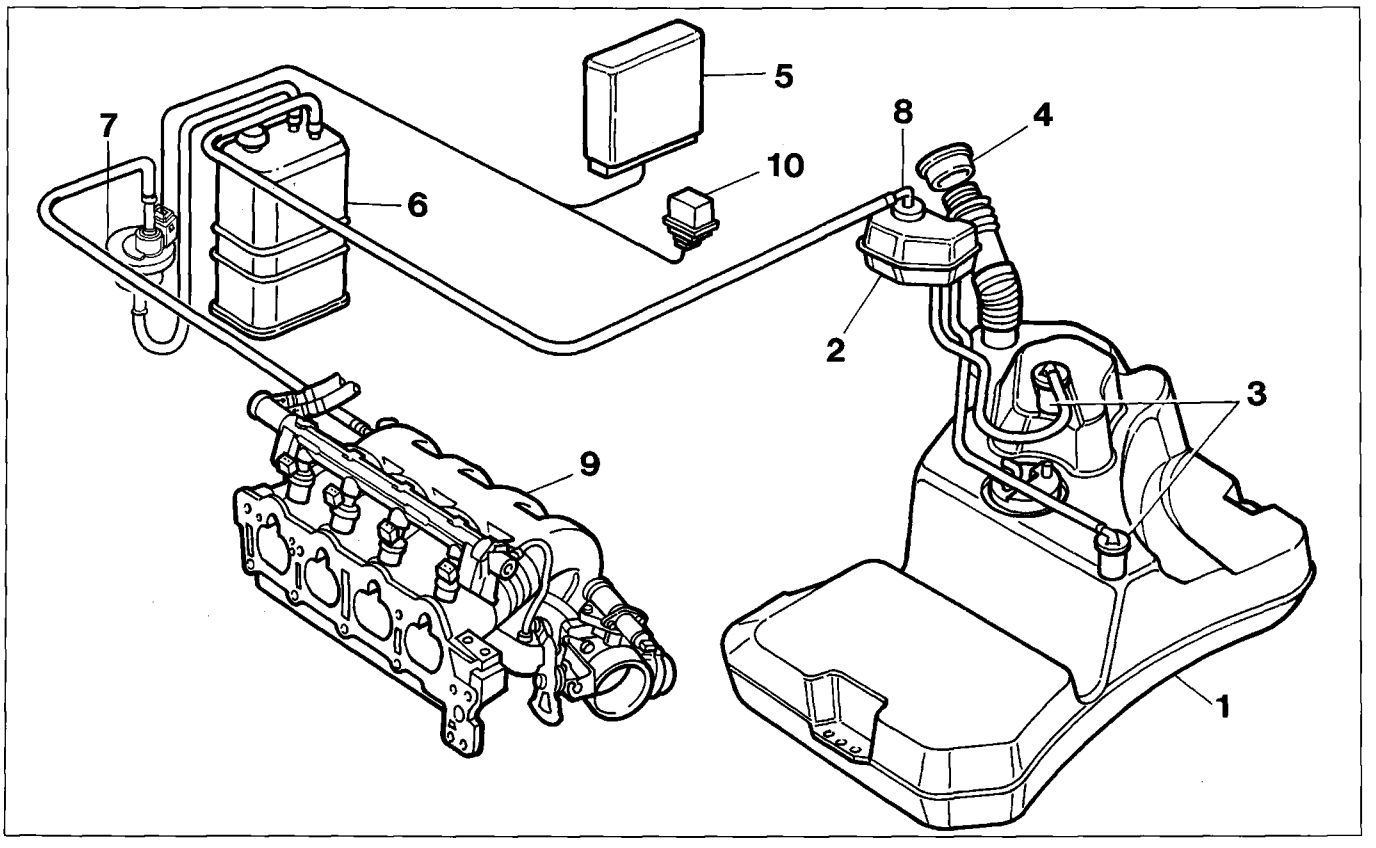

P4F18CJ01

1. Fuel tank
2. Vapour separator
3. Float valve
4. Cap with safety valve
5. Engine control unit
6. Charcoal filter
7. Charcoal filter solenoid valve
8. Multi-purpose valve
9. Inlet manifold
10. Relay

The anti-evaporation system has the task of preventing the fuel vapours, made up of the lightest parts of hydrocarbons which basically form in the tank, from being discharged into the atmosphere.
The system operates, above all, at high outside temperatures when the temperature of the fuel increases and consequently the tendency to evaporation increases likewise: in this situation there is an increase in the pressure in the tank.
In particular, with the tank (1) full, with the vehicle stationary, the two float valves (3) remain open, as they are positioned higher than the breather pipe, and the vapours reach the separator (2) from where they condense and mostly return to the tank.
On the other hand, if there is a great deal of splashing during driving or the vehicle overturns, the valves (3) close preventing the escape of fuel.
When the pressure inside the tank reaches about 30 - 40 bar, the multi-purpose valve (8) opens and the fuel vapours reach the charcoal filter (6). The valve (8) also allows an intake of air into the tank through the charcoal filter if it is necessary after the level of fuel decreases and a vacuum is consequently created inside the tank.
When the engine is running, the control unit operates the charcoal filter solenoid valve which allows the intake of vapours by the engine and the consequent washing of the charcoal filter.
If as a result of a malfunction with any of the components, the pressure inside the tank increases to dangerous levels, then the safety valve located in the cap (4) would allow the pressure to be discharged outwards. If necessary,, this valve can open in the other direction to ventilate the tank and prevent the vacuum from becoming too great.

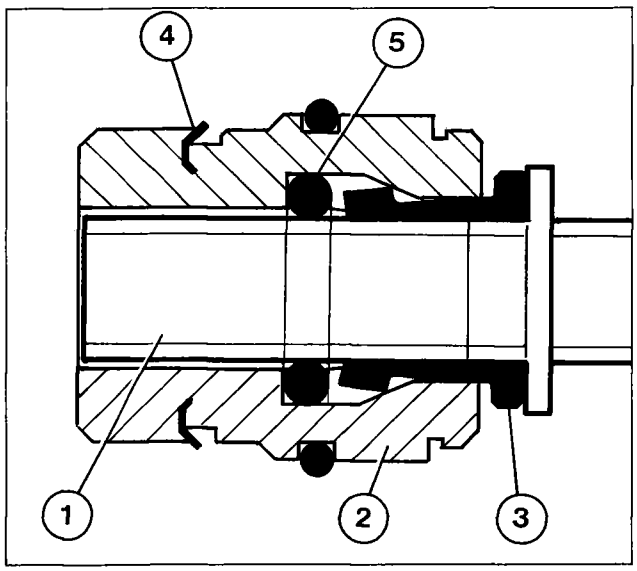

P4F18CJ02

PROCEDURE FOR REMOVING THE ANTI-EVAPORATION SYSTEM RAPID ATTACHMENT PIPE FROM THE INLET MANIFOLD

The pipe for the anti-evaporation system (1) is held in place on the inlet manifold cartridge (2) by means of a clamp (3). A flexible washer (4) keeps the cartridge (2) in its housing preventing any fuel vapours from escaping by means of an O-ring (5).

1. Anti-evaporation system rapid attachment pipe
2. Cartridge
3. Pipe retaining clamp
4. Flexible washer
5. O-ring

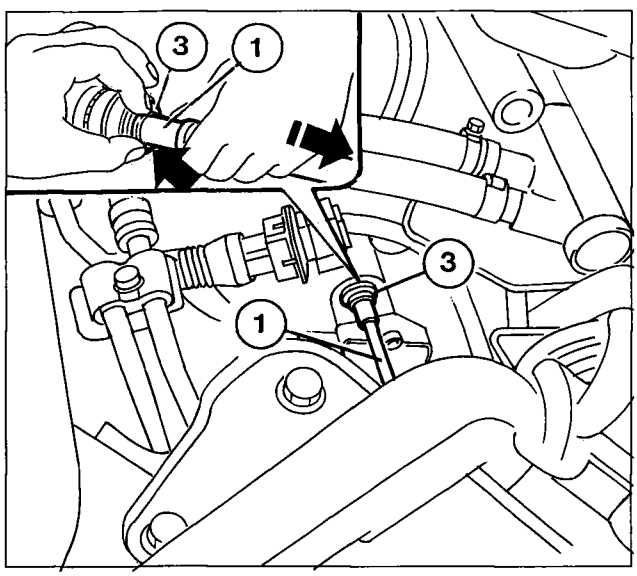

P4F18CJ03

In order to extract the pipe (1), push the clamp (3) towards the manifold with your fingers and, at the same time, extract the actual pipe. This operation can also be carried out using a 1 mm spanner to facilitate the movement of the clamp (3) towards the manifold.

Do not use tools which could create damage to the system for removing the pipe.

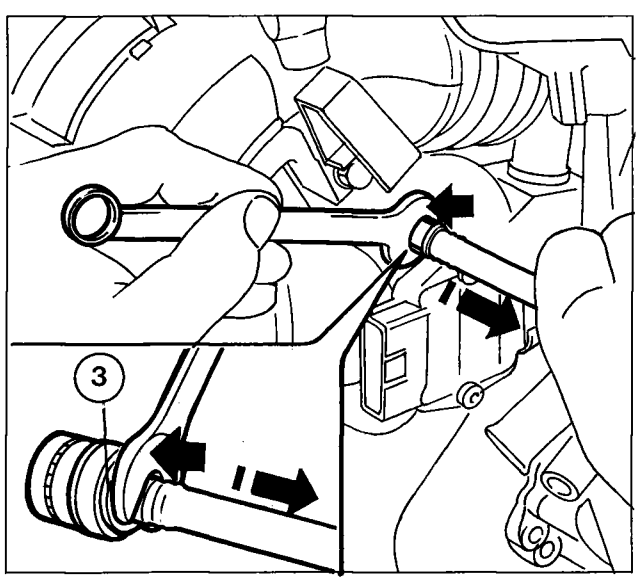

P4F18CJ04

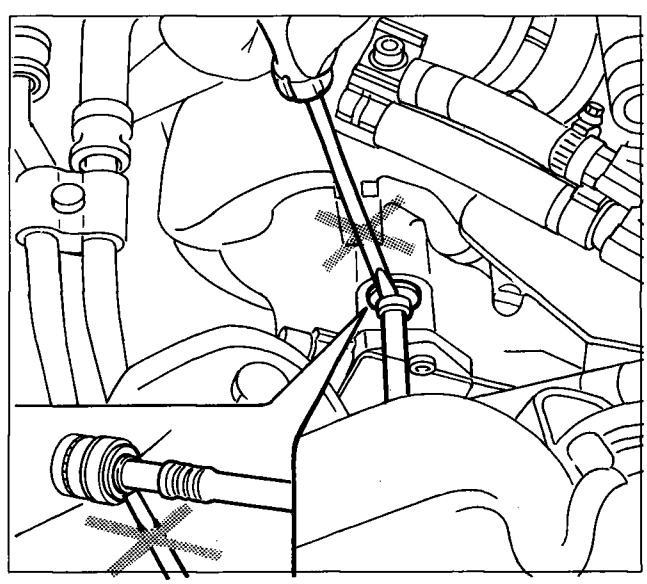

P4F18CJ05

4F54CJ

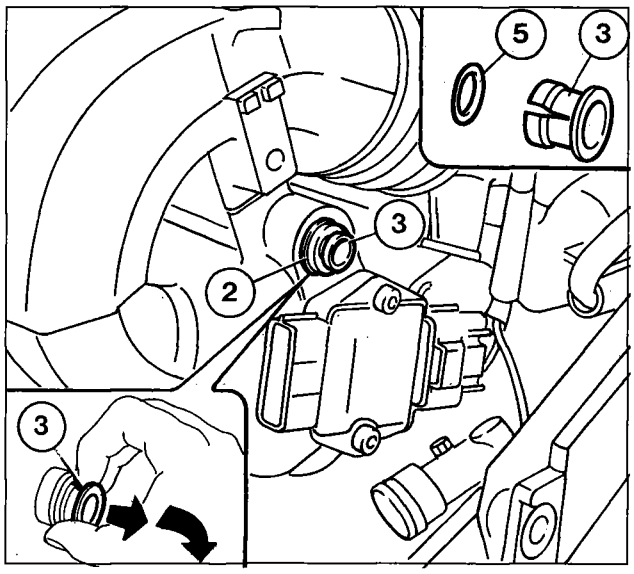

P4F18CJ06

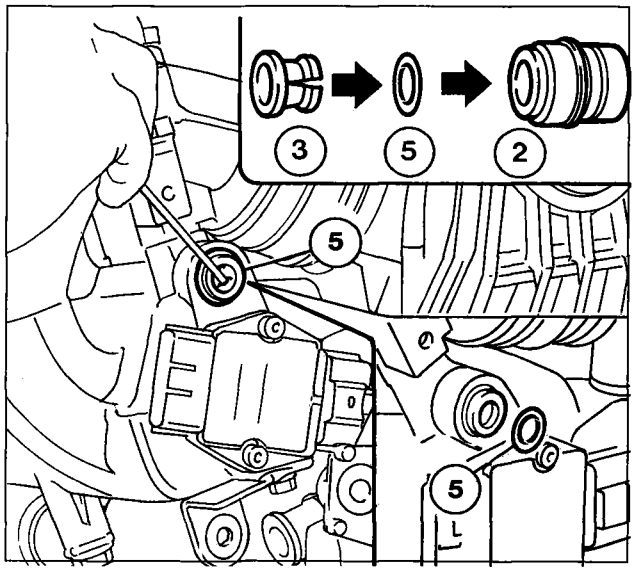

P4F18CJ07

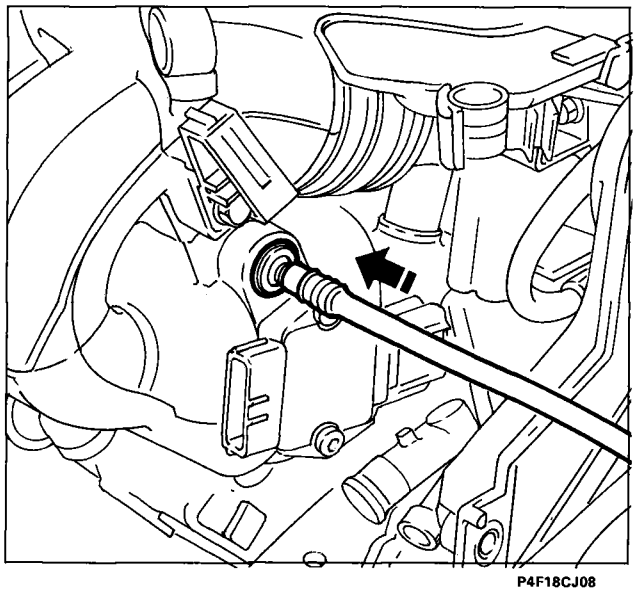
P4F18CJ08

Replacing clamp

A kit is supplied for replacing the clamp which comprises an O-ring (5) and a clamp (3).
After having removed the anti-evaporation system pipe, insert your fingers between the clamp (3) and the cartridge (2) casing (to facilitate the operation move the clamp aside using a screwdriver working with extreme caution). Pull outwards and rotate the actual clamp.

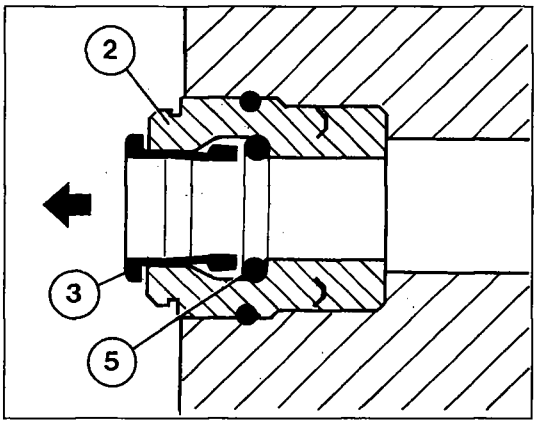

P4F18CJ09

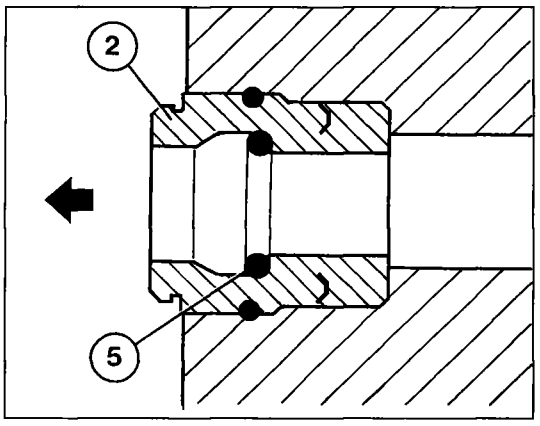

P4F18CJ10

Extract the O-ring (5) inside the cartridge. Clean the interior of the cartridge with an air jet and fit the new O-ring in its housing; then fit the new clamp.

Clean all impurities from the end section of the pipe before it is inserted inside the cartridge. Inser the pipe pushing it to the end of travel position.

4F55CJ

DIGRAM SHOWING RECIRCULATION OF GASES COMING FROM THE CRANKCASE (BLOW-BY)

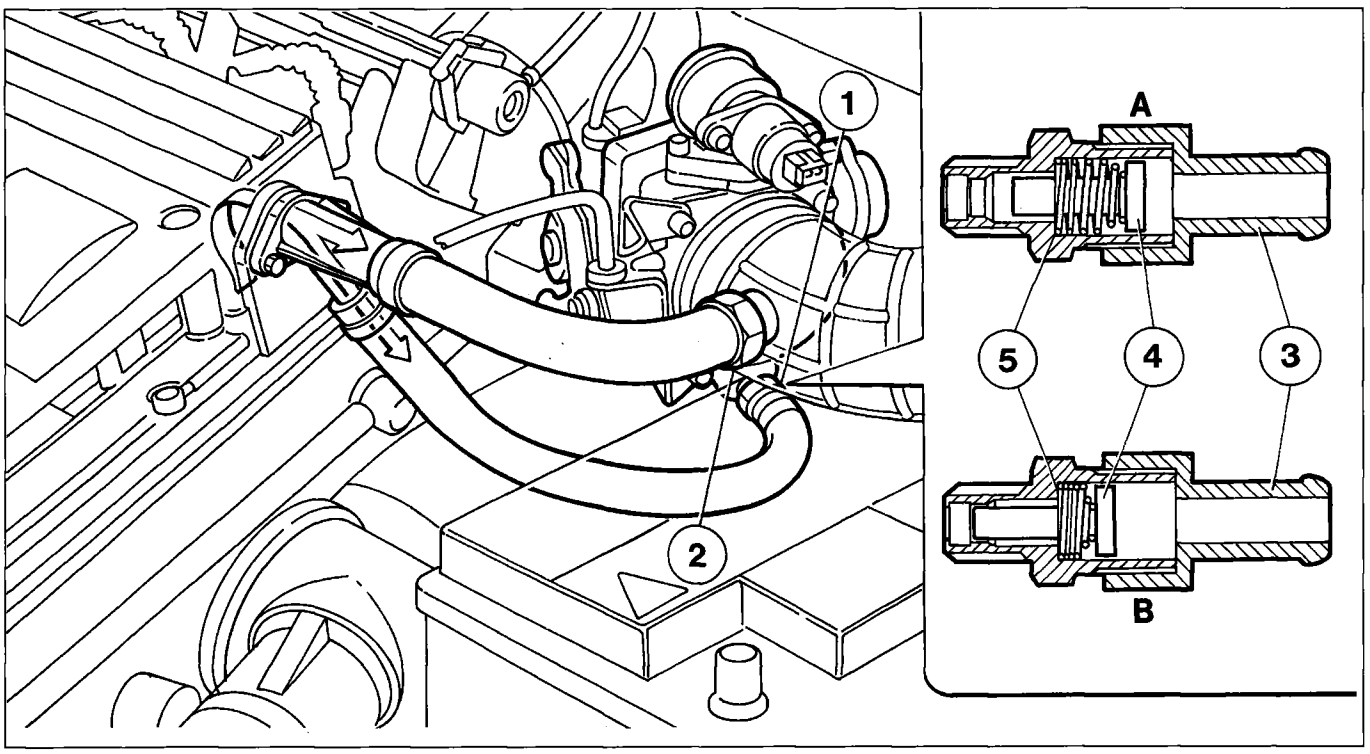

P4F19CJ01

1. Inlet on the butterfly casing with PCV valve
2. Inlet on hose
3. PCV valve
4. Piston
5. Spring

The system controls the breather gas emissions from the crankcase, made up of mixtures of air, fuel vapours and burnt gases which escape from the piston seals and lubricant oil vapours, causing them to be drawn in again and burnt by the engine.

The breather gases coming from the crankcase reach the cylinder head and are directed into two different intakes (1) and (2).

With the butterfly open, the gases flow through the intakes (1) and (2) and are drawn into the manifold.

With the butterfly closed, the vacuum in the inlet manifold draws the gases through the intake (1) which contains a PCV valve (3) *(Positive Crank Ventilation)* which shutters the intake.

The PCV valve can, in effect, be modulated and the quantity of gases passing through is proportional to the vacuum in the inlet manifold.

When the butterfly valve is completely open (condition A), the vacuum inside the inlet manifold is minimal, the spring (5) is completely extended and the PCV valve allows the maximum flow of breather gases.
Viceversa, with the butterfly completely closed (condition B), the vacuum inside the manifold is maximu, causing the movement of the piston (4) which shutters the flow of breather gases inside the PVC thereby limiting the intake of gases into the manifold.

Copyright by Fiat Auto

ENGINE EXHAUST ASSEMBLY DIAGRAM

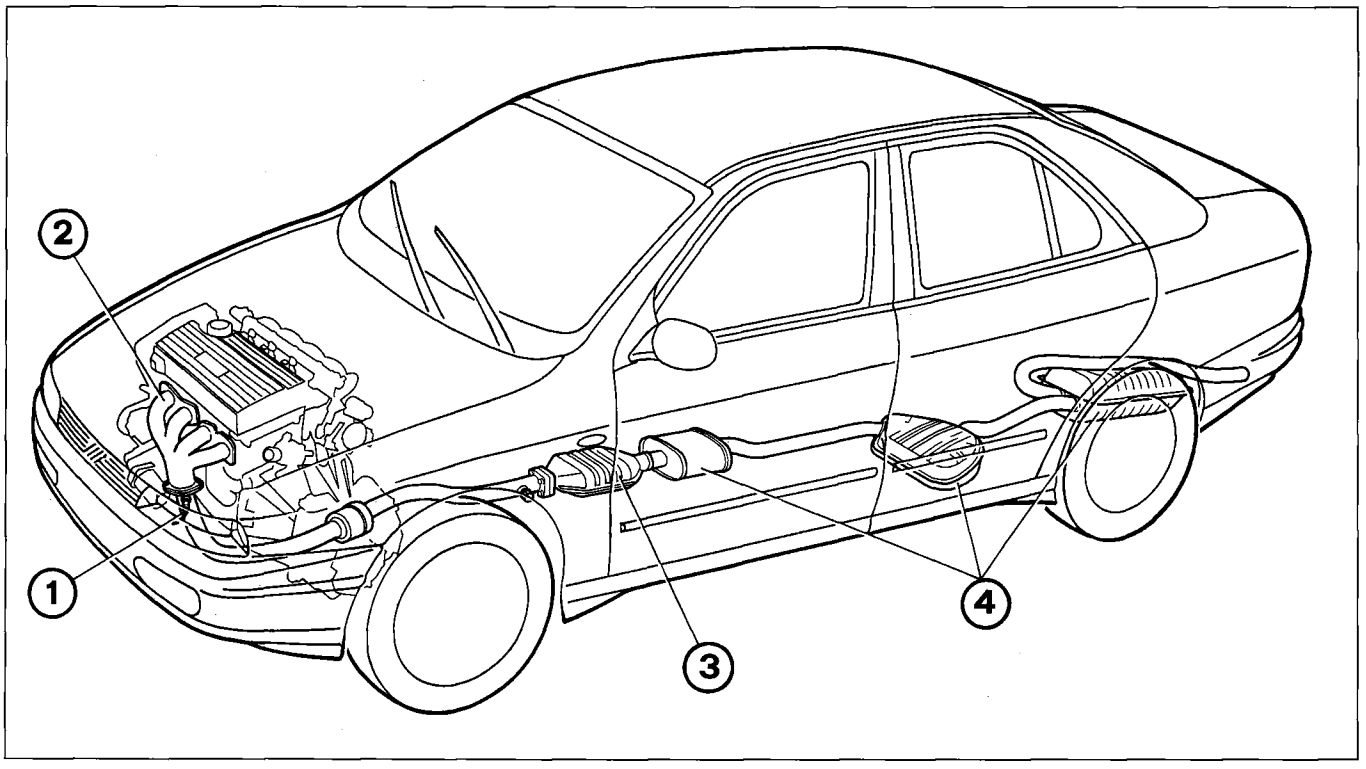

P4F20CJ01

1. Exhaust manifold
2. Lambda sensor
3. Catalytic silencer
4. Silencers

The control of the mixture strength, which is the closed loop type, is activated by the Lambda sensor which measures the oxygen content in the exhaust gases upstream of the catalytic silencer.

The Lambda sensor measurements allow the electronic control unit to constantly correct the quantity of petrol injected keeping the air/fuel ratio constant.

In this way the harmful exhaust emissions are controlled, a task completed by the three way catalytic converter (catalytic silencer).

The efficient operation of the catalytic silencer and consequently the containing of the toxic exhaust gases depends on the air/fuel ratio which the engine receives.

The three way catalytic converter makes it possible to simultaneously restrict the three pollutant gases present in the exhaust gases: unburnt hydrocarbons (HC), carbon monoxide (CO), nitrous oxides (NOx).

Two types of chemical reaction take place inside the converter:

- oxidation of the CO and the HC, converted into carbon dioxide (CO2) and water (H2O)
- reduction of the NOx, converted into Nitrogen (N2).

The following will rapidly put the catalytic converter out of action and render it irreparable:

- the presence of lead in the petrol which lowers the degree of conversion to such levels as to make its presence in the system superfluous;
- the presence of unburnt petrol in the converter: in effect, a flow of petrol for a duation of 30 sees in an ambient of 800°C (temperature inside the silencer) is sufficient to cause the catalyzer to melt and break.

It is absolutely vital for the ignition system to be in perfect working order, therefore **the spark plug leads should not be disconnected with the engine running for any reason and, in the case of tests, the catalytic converter should be replaced with an equivalent section of pipe.**

LOCATION OF INJECTION/IGNITION SYSTEM COMPONENTS IN ENGINE COMPARTMENT

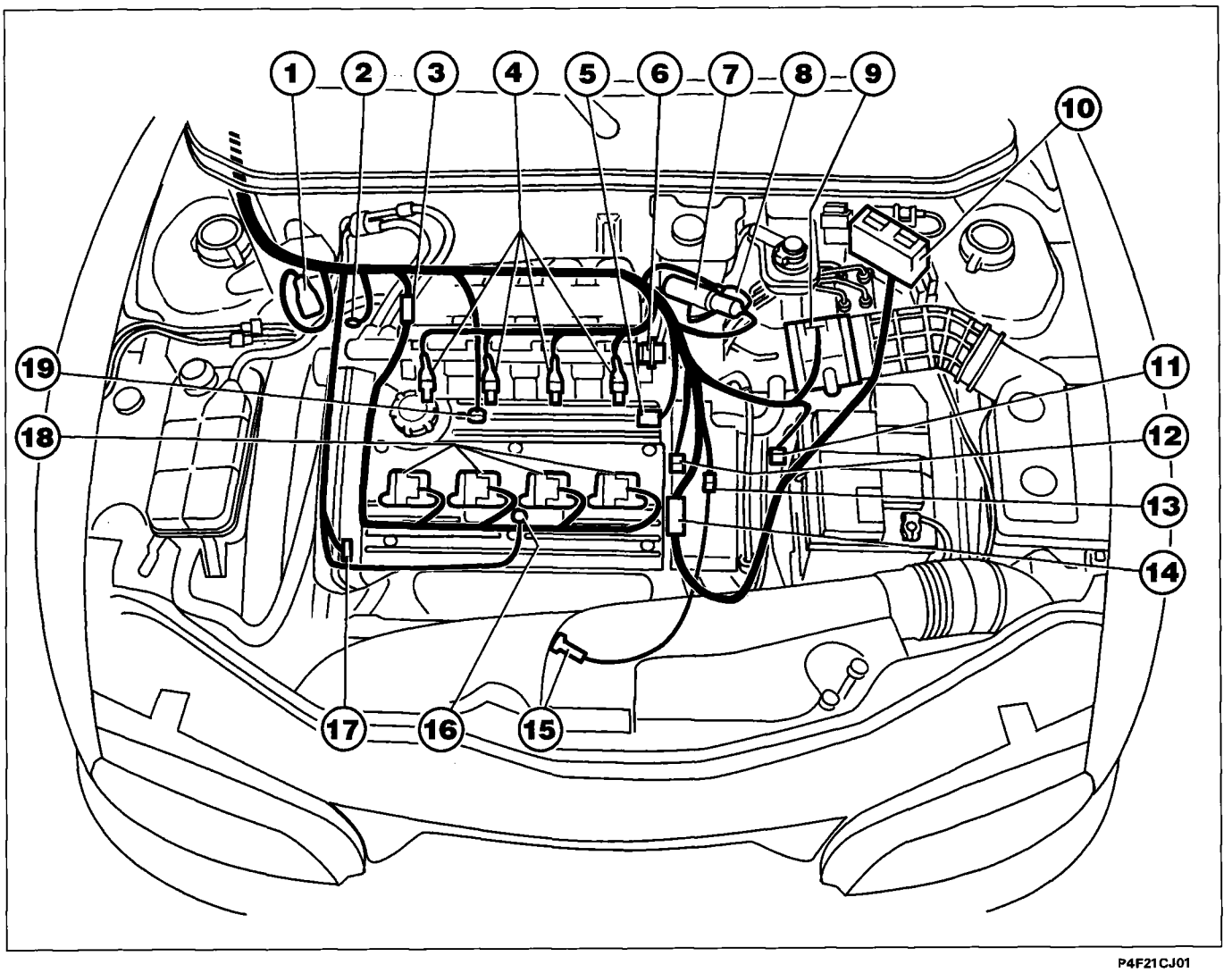

P4F21CJ01

Key:

1. Diagnostic socket
2. Earth on engine
3. Ignition power module
4. Injectors
5. Engine rpm sensor
6. Fuel pressure regulator
7. Engine idle speed adjustment solenoid valve
8. Butterfly valve position sensor
9. Air flow meter
10. General system protective fuse
11. Vehicle speed sensor
12. Coolant temperature sensor
13. Lambda sensor coupling
14. Join between injection cable and front cable
15. Lambda sensor
16. Secondary coil earth
17. Engine timing sensor
18. Ignition coils
19. Detonation sensor

Copyright by Fiat Auto

INJECTION/IGNITINO SYSTEM WIRING DIAGRAM

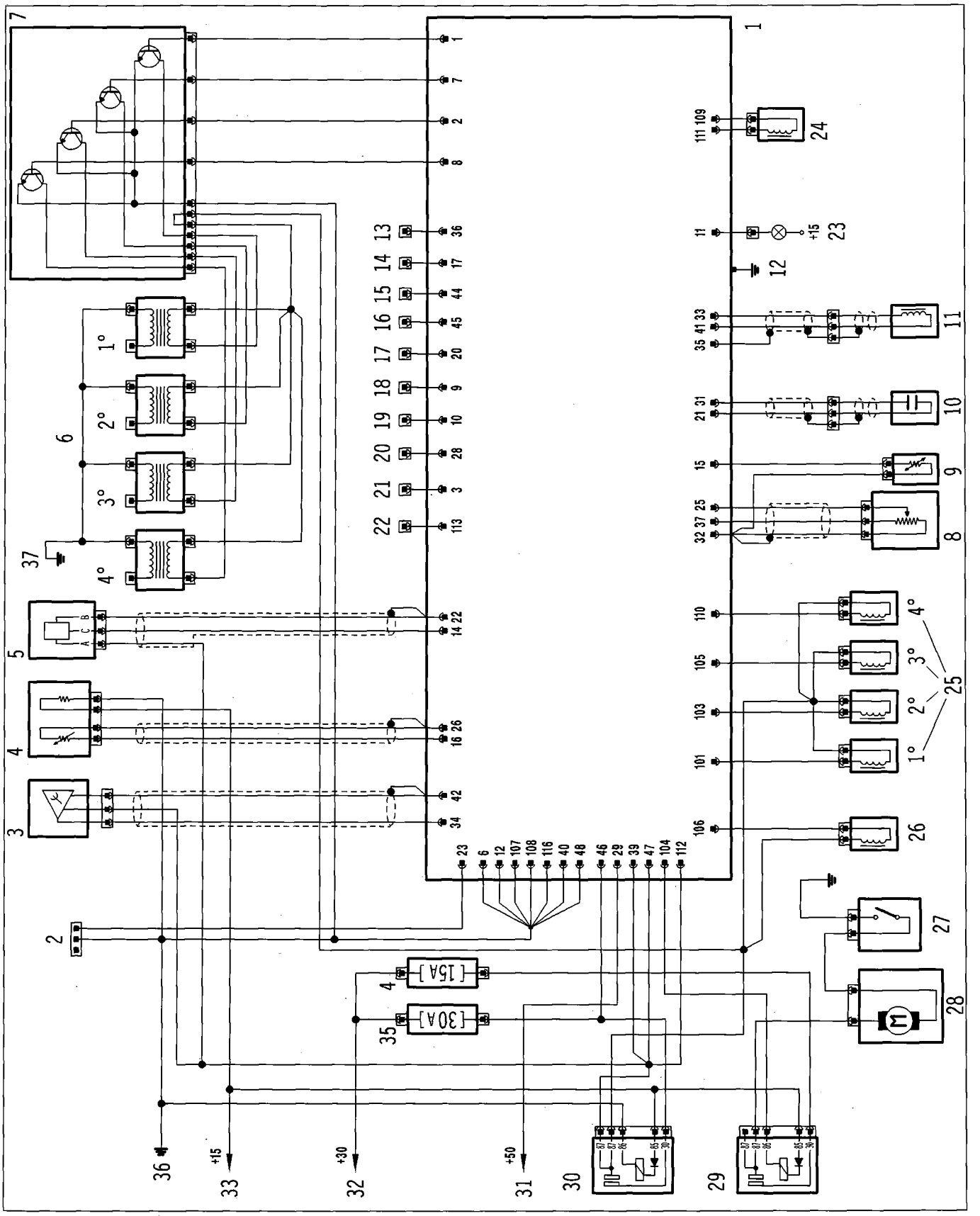

Injection/ignition system wiring diagram components key

1. Injection/ignition control unit
2. F/L Tester (line K)
3. Engine timing sensor
4. Lambda sensor
5. Air flow meter
6. Ignition coils
7. Ignition power module
8. Butterfly position sensor
9. Coolant temperature sensor
10. Detonation sensor
11. Engine rpm sensor
12. Control unit casing earth on vehicle bodyshell
13. Vehicle speed inlet
14. Inlet from climate control three stage thermostat (if fitted)
15. Calibration selection
16. Trim level selection (to earth for versions without climate control)
17. Fiat CODE control unit connection
18. Electric fan low speed relay operation
19. Electric fan high speed relay operation (short circuited at pin 9 for versions without climate control)
20. Inlet requesting switching on of climate control compressor (if fitted)
21. Rev counter operation
22. Climate control compressor relay feed (if fitted)
23. System failure warning light operation
24. Engine idle speed adjustment solenoid valve
25. Injectors
26. Fuel vapour solenoid valve
27. Inertia switch
28. Electric fuel pump
29. Electric fuel pump relay
30. System relay feed
31. AVV signal from ignition switch (+50)
32. Supply from battery (+30)
33. Supply from ignition switch (+15)
34. Electric pump fuse (30 A)
35. System fuse (15 A)
36. Earth (on engine block)
37. Earth (below cylinder head cover)

INJECTION/IGNITION SYSTEM FUSES AND RELAYS

1. General protective fuse

The general fuse (1) (EFI - 30A) protecting the injection/ignition system is housed inside a container; to gain access to it, remove the cover releasing it from the side clips.

2. Fuses and relays

They are located below the glove compartment, in front of the electronic control unit.

2. Relays: supplying the system and supplying the electric pump

3. Fuses: 15A protecting the system 30A protecting the electric pump

NOTE *The fuses and relays should be recognized on the basis of the electrical connections.*

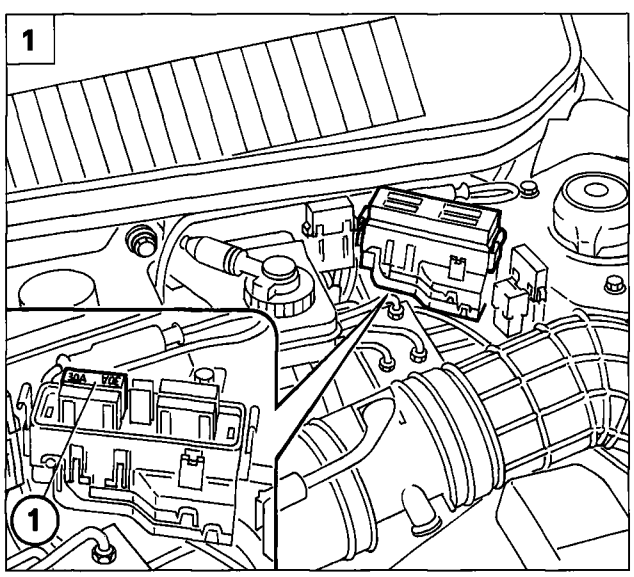

P4F23CJ01

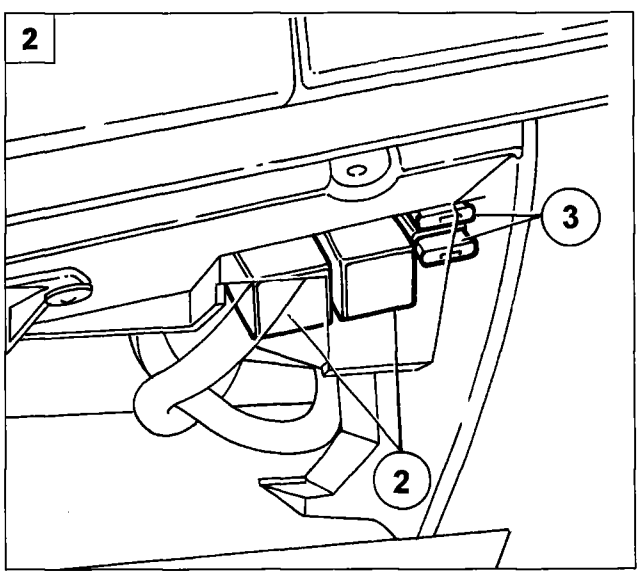

P4F23CJ02

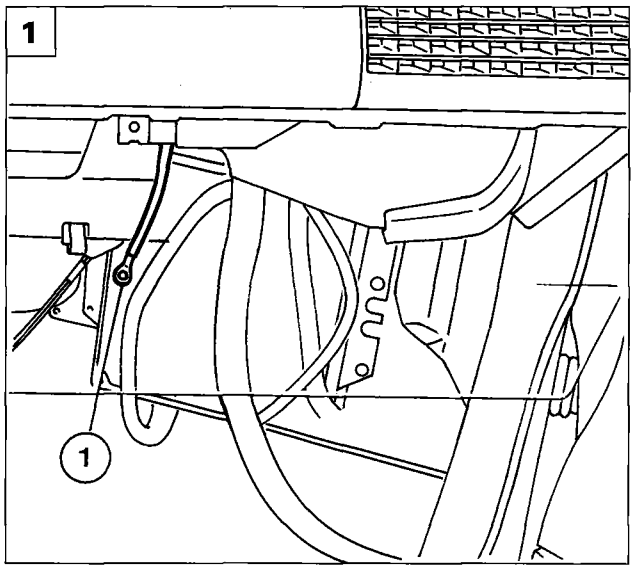

P4F24CJ01

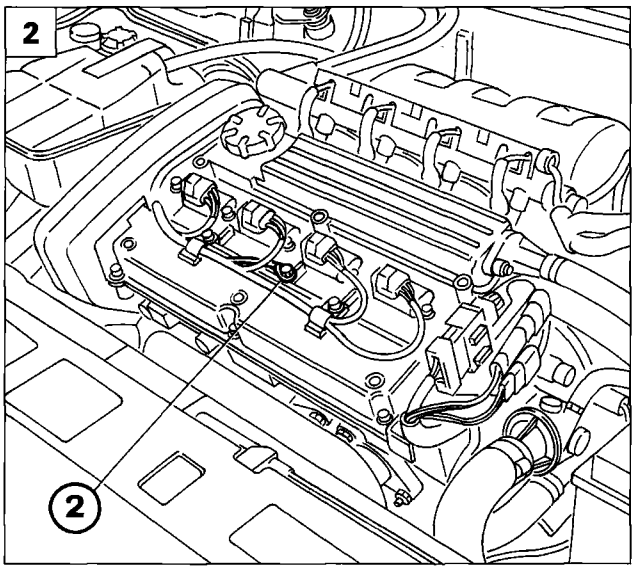

P4F24CJ02

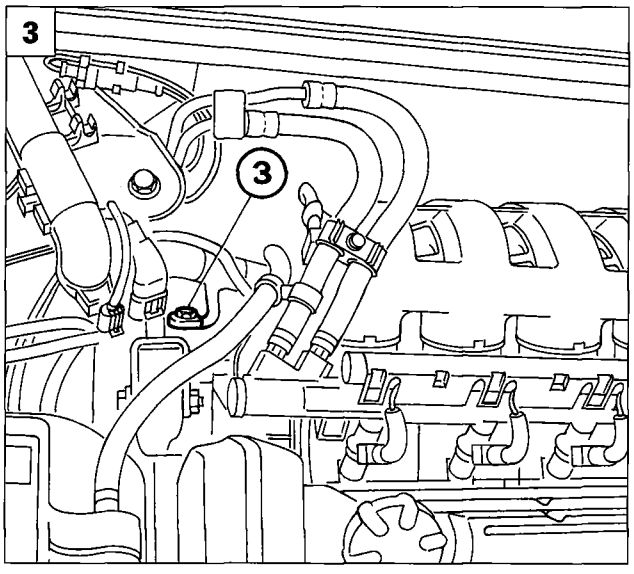

P4F24CJ03

EARTH POINTS

In order to increase electro-magnetic compatibility and operational reliability special care has been taken over the location of the earth points as illustrated in the diagram below:

1. control unit casing, connected to the vehicle bodyshell;
2. coils secondary winding connected under the cylinder head cover;
3. control unit internal earths (pins 6, 12, 107, 108, 116, 40, 48), Lambda sensor heater earth, relay earths, ignition power module earth connected to the engine crankcase.

INJECTION/IGNITION SYSTEM COMPONENTS

The injection/ignition system basically comprises wiring, an electronic control unit (injection/ignition control unit) and the following components:

system and electric pump fuses, system and electric pump relays

sensors:

- butterfly position sensor,
- coolant temperature sensor,
- air flow meter,
- engine rpm sensor,
- engine timing sensor,
- lambda sensor,
- vehicle speed sensor,
- detonation sensor;

actuators:

- electric fuel pump,
- injectors,
- engine idle speed adjustment solenoid valve,
- fuel vapour solenoid valve,
- electric pump cut out inertia switch,
- ignition power module,
- ignition coils;

devices connected to the control unit:

- radiator fan relays,
- climate control compressor relay (if fitted),
- Fiat CODE control unit.

INJECTION/IGNITION SYSTEM WIRING

The connection between the different components of the system is achieved by means of a single set of wiring fitted with various type connectors grouped in special ducts fitted on the engine (pre-wiring).

INJECTION/IGNITION ELECTRONIC CONTROL UNIT

It is connected to the electrical wiring by means of four specific connectors and they receive all the data concerning the engine operating conditions transmitted by the various sensors.
It receives all the information concerning the engine operating conditions transmitted by the various sensors.

Using this data and with the assistance of typical programmes stored indelibly in its memory, the control unit is capable of achieving the following objectives:

1. Managing the frequency and the time of injection; i.e. providing the quantity of fuel calculated for each cylinder with a timed, sequential type operation (1-3-4-2).
   In pratice, the air/fuel ratio should always remain within the optimum value, defined during the setting up, in order to limit fuel consumption, reduce harmful exhaust gas emissions and improve the thermodynamic efficiency of the engine.
2. Electronically controlling the moment of ignition (ignition advance).
3. Controlling the air flow rate at the rotation speed through the specific sensor in order to allow the smooth operation of the engine as the environmental parameters and load s applied vary.
4. Detecting, through implementing the special programmes, any operating defects for the various sensors recorded in the RAM and replacing any incorrect data or data which has not been received with the replacement values in order to ensure the operation of the engine even in emergency conditions (RECOVERY).
5. Providing the Fiat/Lancia Tester, if connected, with the data relating to operating defects detected and memorized, through the serial line (diagnostic socket).

Removing-refitting

The control unit is located under the glove compartment; it should be removed by carrying out the following operations:

1. Remove the plastic protection under the control unit;
2. undo the bolts fixing the control unit to the mounting bracket and rest the control unit on the floor of the vehicle;

- disconnect the electrical connectors, one by one;
- remove the control unit.

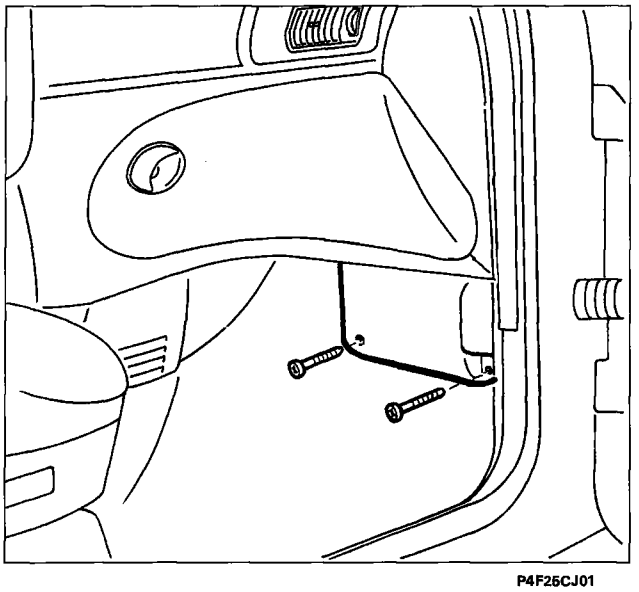

P4F25CJ01

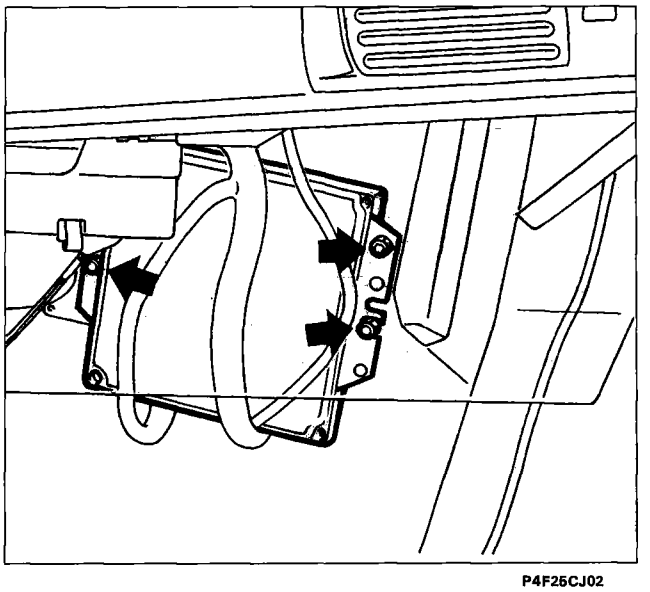

P4F25CJ02

Identification of connections at the control unit (pin-out)

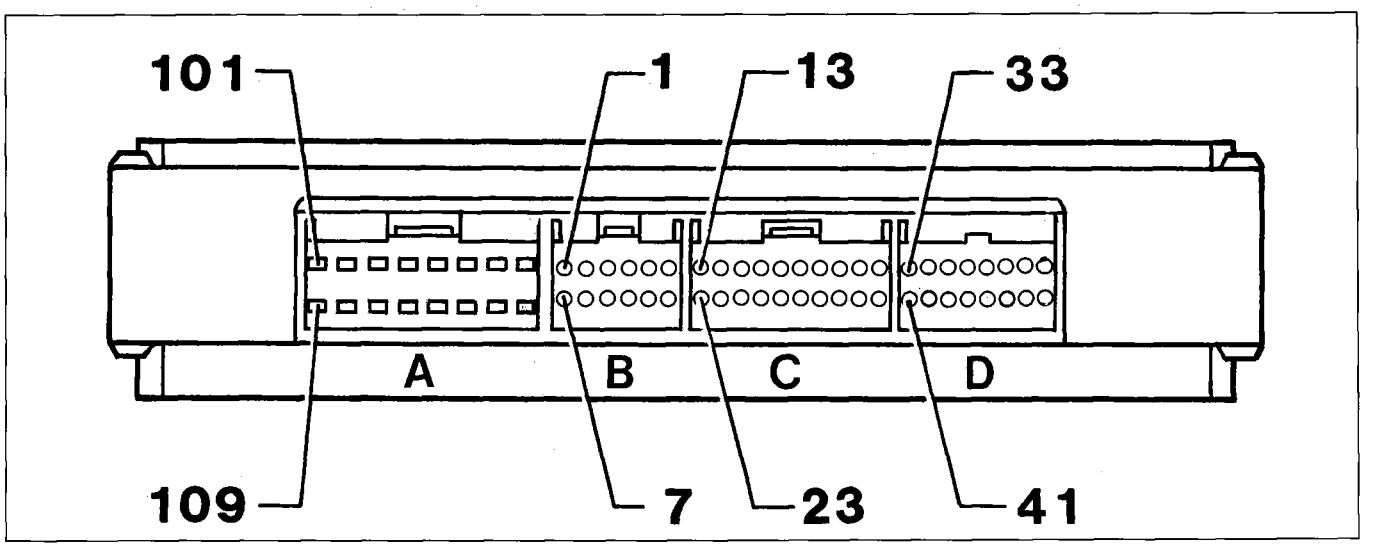

P4F26CJ01

Connector A

101. Operation of injector for cylinder 1
102. N.C.
103. Operation of cylinder 2 injector
104. Pump relay operation
105. Operation of injector for cylinder 3
106. Negative for charcoal filter solenoid valve
107. Earth
108. Earth
109. Negative for engine idle adjustment solenoid valve
110. Operation of injector for cylinder 4
111. Positive for engine idle adjustment solenoid valve
112. Control unit supply
113. Climate control compressor relay feed (if fitted)
114. N.C.
115. N.C.
116. Earth

Connector B

1. Operation of cylinder 1 coil
2. Operation of cylinder 3 coil
3. Operation of rev counter
4. N.C.
5. N.C.
6. Earth
7. Operation of cylinder 2 coil
8. Operation of cylinder 4 coil
9. Operation of electric fan low speed relay
10. Operation of electric fan high speed relay *
11. Operation of system failure light
12. Earth

Connector C

13. N.C.
14. Positive for air flow meter
15. Positive for coolant temperature sensor
16. Positive for Lambda sensor
17. Three stage thermostat signal (if fitted)
18. N.C.
19. N.C.
20. Connection with Fiat CODE
21. Positive for detonation sensor
22. Negative for air flow meter
23. Line K
24. N.C.
25. Butterfly position sensosr signal
26. Negative for Lambda sensor
27. N.C.
28. Compressor engagement signal (if fitted)
29. AVV signal from ignition switch (+50)
30. N.C.
31. Earth for detonation sensor
32. Negative for coolant temperature and butterfly position

Connector D

33. Positive for engine rpm sensor
34. Positive for engine timing sensor
35. Earth for engine rpm sensor
36. Signal for vehicle speed sensor
37. Positive for butterfly position sensor
38. N.C.
39. Control unit supply
40. Earth
41. Negative for engine rpm sensor
42. Negative for engine timing sensor
43. N.C.
44. Calibration selection
45. Trim level selection (to earth for versions without climate control)
46. Control unit supply
47. Control unit supply
48. Earth

* Short circuited at pin 9 for versions without climate control

N.C. = Not connected

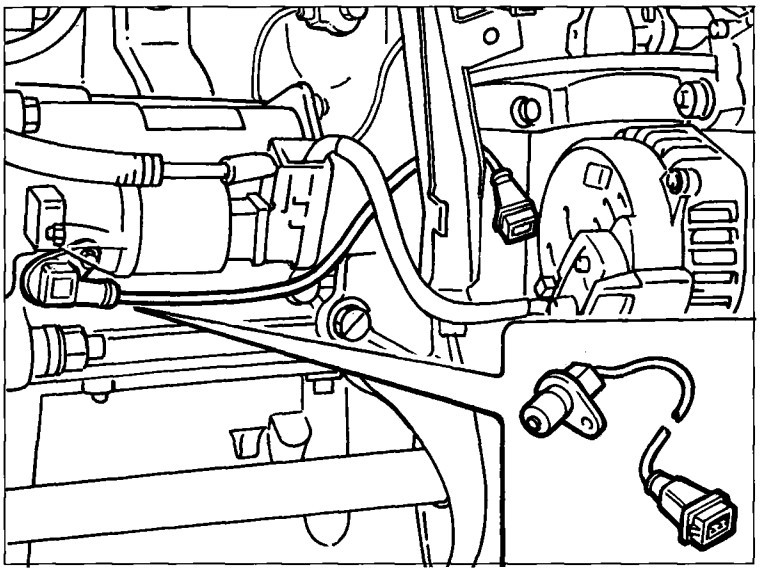

P4F27CJ01

ENGINE RPM SENSOR (Hitachi RS-125)

The sensor is fixed to the cylinder block-/crankcase: the flywheel is fixed to the crankshaft.

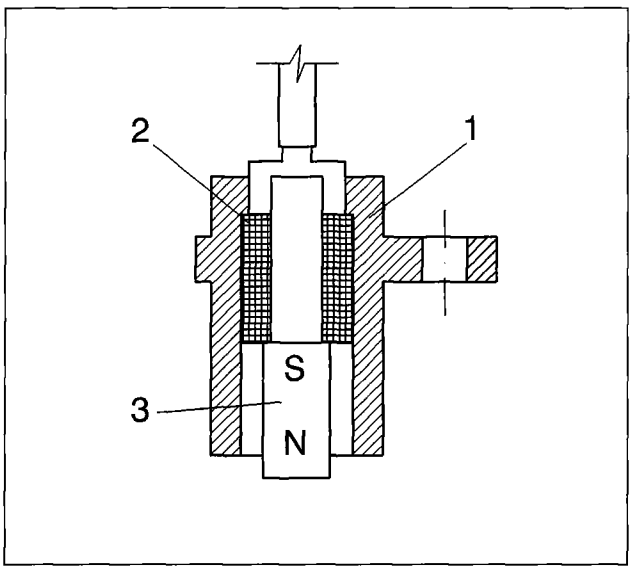

P4F27CJ02

Operating principle

The sensor is made up of a tubular casing (1) which contains a permanent magnet (3) and an electrical winding (2):
As a result of the flywheel teeth passing by, the mangetic flux produced by the magnet (3) is subject to oscillations as a result of the variation in the gap.
These oscillations create an electro-motive force in the winding (2) where the voltage is alternately positive (tooth facing the sensor) and negative (gap facing the sensor): see paragraph on "signal management"). The peak sensor output voltage depends, like other factors, on the distance between the sensor and the tooth (gap).

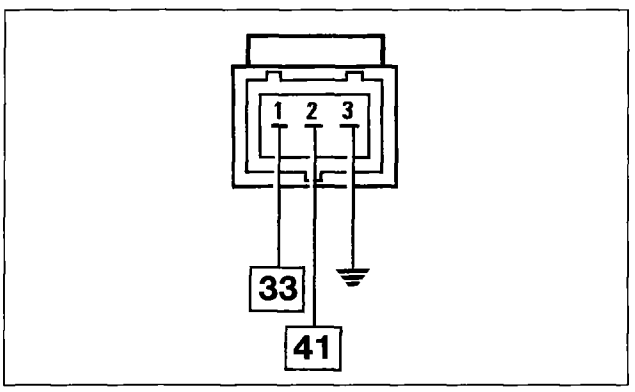

P4F27CJ03

Wiring connector

The sensor is connected to the electronic control unit (pins 33 and 41) by twisted cables covered by an outer casing giving protection against interference and connected to earth.

NOTE *The numbers indicate the corresponding control unit pins.*

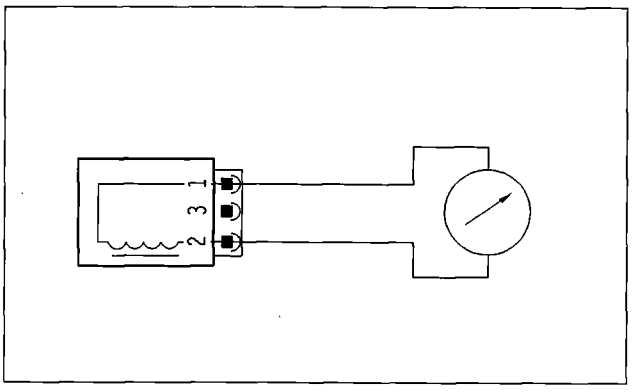

P4F28CJ01

Checking the resistance

The resistance of the sensor may be measured by disconnecting the connector and connecting an ohmmeter to the sensor.

Resistance: 570 ± 57 ohm at 20°C

Recovery

In the case of a sensor failure, the control unit does not allow the engine to be started up.

If the fault occurs with the engine running, the engine cuts out.

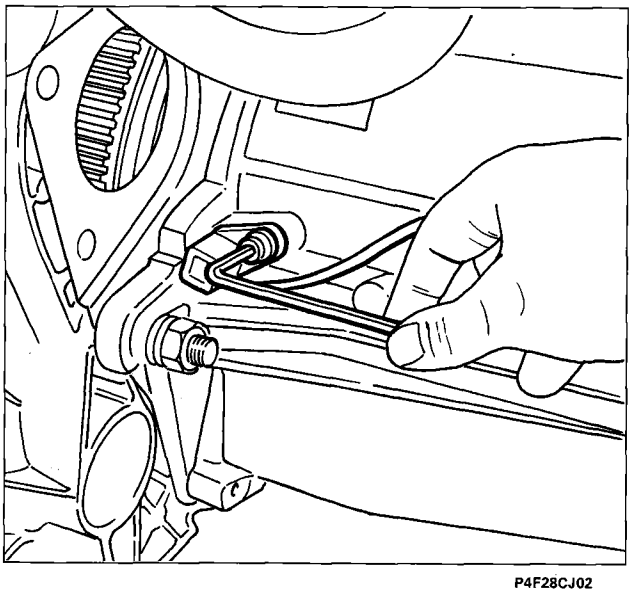

P4F28CJ02

Removing-refitting engine rpm sensor

Position the vehicle on a lift, then, working from the lower part of the vehicle:

- disconnect the electrical connector;
- undo the bolt fixing the sensor and remove it from its housing.

Tightening torque 0.45 daNm

NOTE *The sensor is fitted in production with tolerances that ensure a gap of 0.8 ± 0.4 mm without the need for further adjustments. This gap is also ensured if the sensor has to be replaced with another one.*

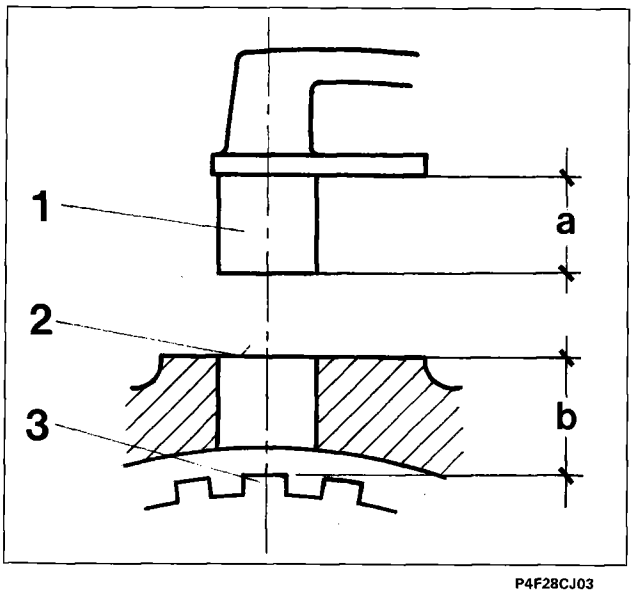

P4F28CJ03

Checking gap

If the gap between the sensor and the flywheel needs to be checked, proceed as described below:

- measure the distance between the end of the sensor and the lower part of the sensor bracket (distance "a");
- measure the distance between the fitting element on the crankcase and the upper part of the tooth (distance "b"), repeating the measurement for at least two opposite teeth.
  The gap (t = b-a) should be between 0.4 and 1.2 mm.

1. Sensor
2. Fitting element
3. Flywheel tooth

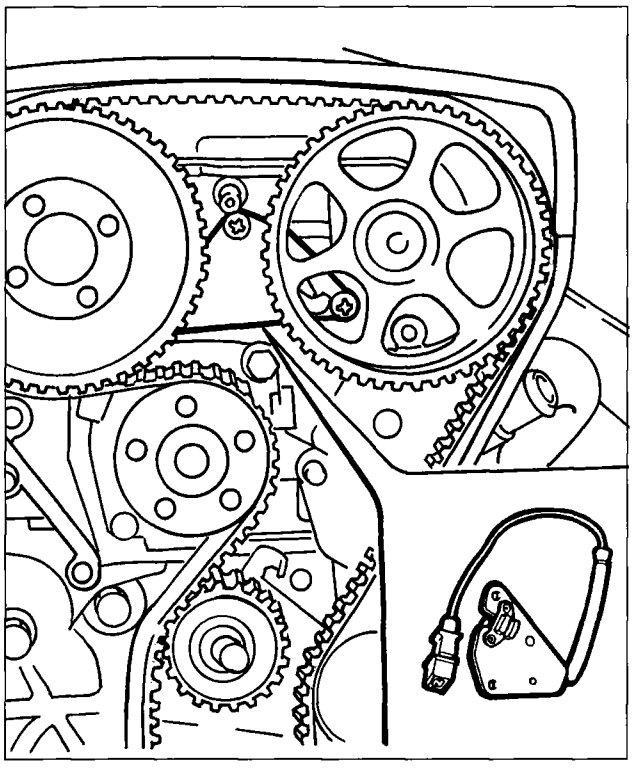

P4F29CJ01

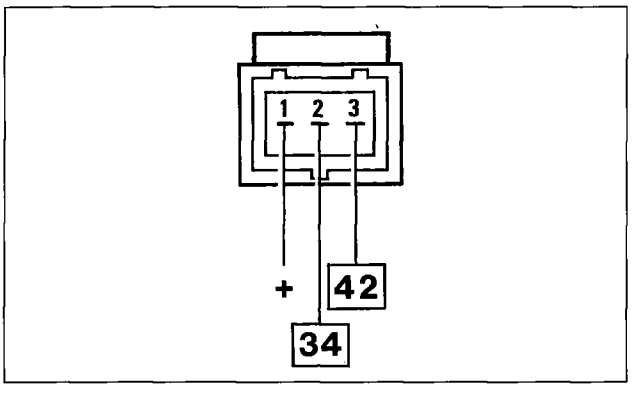

P4F29CJ02

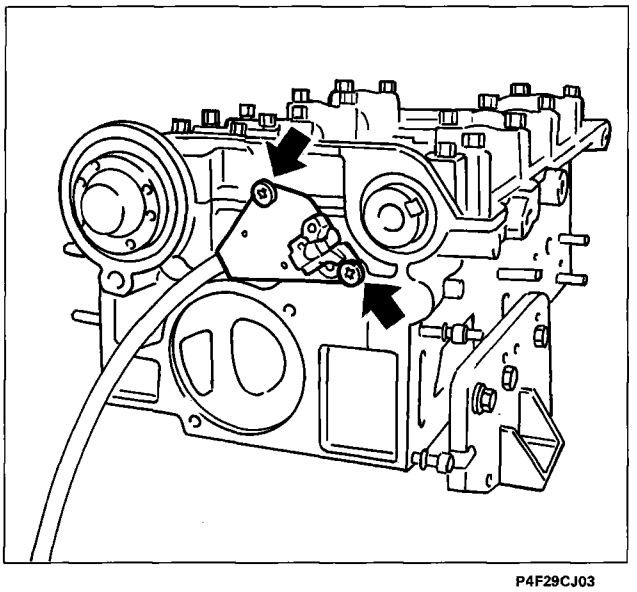

P4F29CJ03

ENGINE TIMING SENSOR (Bosch B.232.070.023)

The engine timing signal, together with the engine rpm and TDC signal, allow the control unit to recognize the succession of cylinders to implement the timed injection.
This signal is produced by a Hall effect sensor, fitted by the exhaust camshaft drive pulley.

For a more detailed description of the operating principle, refer to the section on the Fuel System for the 1581 16v version.

NOTE *It is not possible to carry out any adjustment to the angular position of the sensor.*

Recovery

In the case of a sensor failure, the control unit does not allow the engine to be started up.

If, however, the fault occurs with the engine running and after the control unit has recognized the timing, then the engine is kept running.

Wiring connector

The numbers indicate the corresponding control unit pins.

Removing-refitting

This operation involves the removal of the toothed timing belt and the camshaft toothed pulley, exhaust side.
Having carried out these operations it is necessary to:
- disconnect the electrical connector;
- undo the two fixing bolts (arrow) and remove the sensor.

When refitting reverse the procedure, following the fitting instructions and tensioning the toothed belt.

NOTE *The sensor does not require any sort of adjustment.*

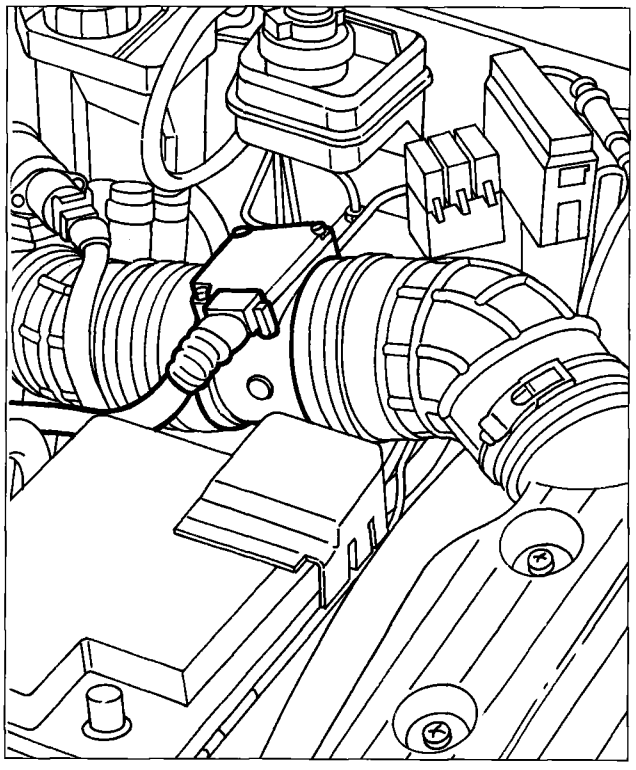

P4F30CJ01

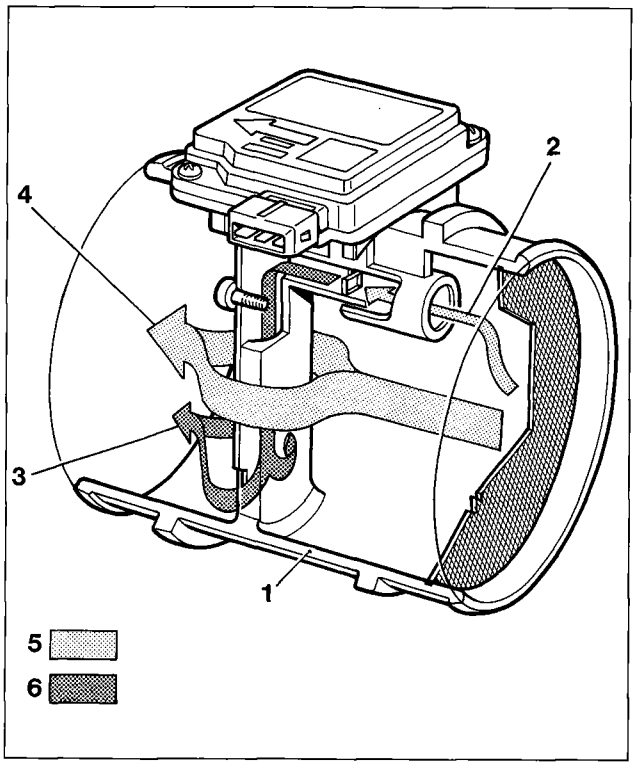

P4F30CJ02

1. Flow meter casing
2. Air intake into the duct
3. Air outlet from the duct
4. Air outlet
5. Intake air
6. Measured air

AIR FLOW METER (Hitachi AFH-13B)

The air flow meter is the hot wire type.

It has a duct in the upper section, parallel to the main flow, which contains the heated element.

Part of the intake air flow is introduced into the duct and, after having passed through it, it comes out of the opposite part, returning to the main flow.

As a result, only part of the mass of air which passes through the flow meter is measured: this quantity is, however, proportional to the overall mass in the flow meter.

The electrical voltage coming out of the flow meter is therefore representative of the total flow rate which is calculated by applying the appropriate proportionality parameters.

This type of flow meter has two advantages compared with the full flow type:

- considerable insensitivity to the pulsating of the air columns, especially present at low speeds and strong loads;
- less fouling of the filament, thanks to the reduced mass of air coming into contact with it; in effect, the control unit has no sort of wire cleaning strategy *(burn-in)*.

Recovery

The air flow rate is calculated on the basis of the butterfly position and rotation speed values.

The recharging time for the coils is established according to the fixed values contained in a table stored in the control unit memory.

Additional provisions

The self-adjustment function for the mixture strength and idle are disabled.

The recirculation of the fuel vapours is inhibited (cut out solenoid valve disabled)

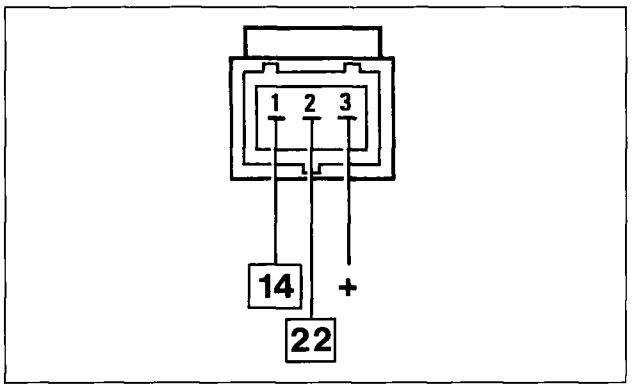

P4F31CJ01

Wiring connector

The numbers indicate the corresponding control unit pins.

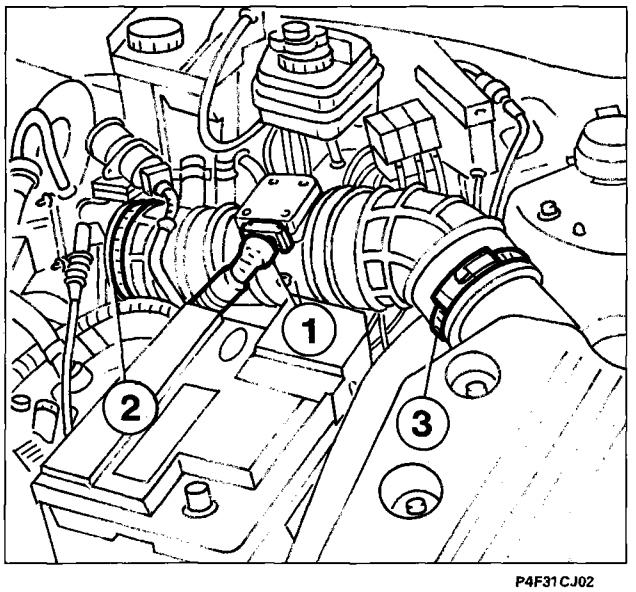

P4F31CJ02

Removing-refitting

- Remove the battery, disconnect the electrical connector (1) from the flow meter and loosen the bands (2) and (3) fixing the inlet hose;

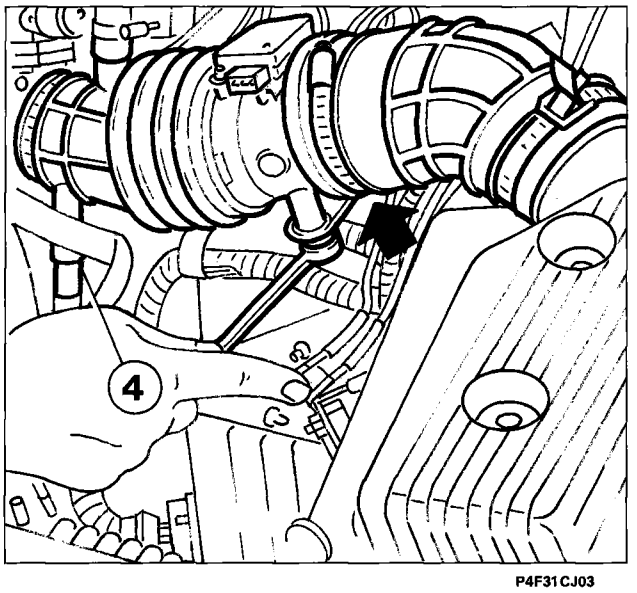

P4F31CJ03

- disconnect the blow-by hose (4) from the inlet hose, undo the two bolts (arrow) fixing the flow meter mounting bracket and remove the assembly;
- then loosen the bands for the flow meter and remove the two hoses.

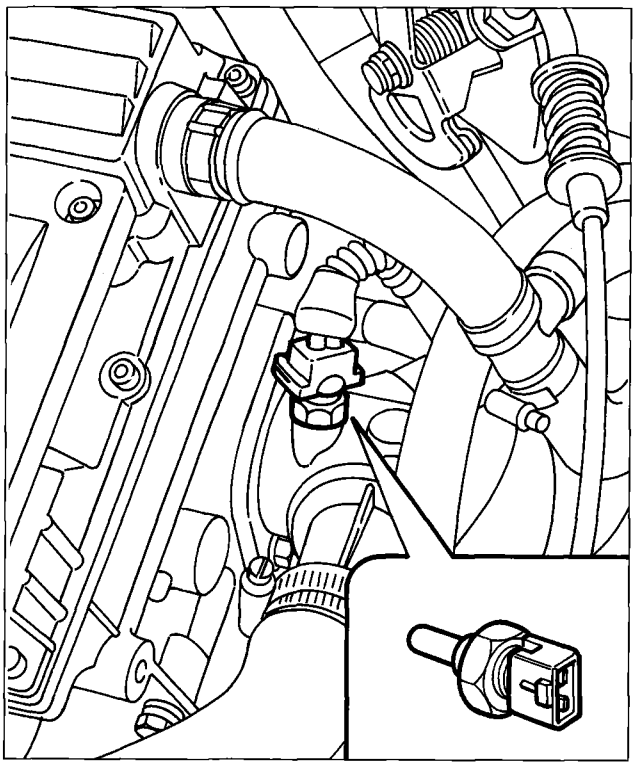

P4F32CJ01

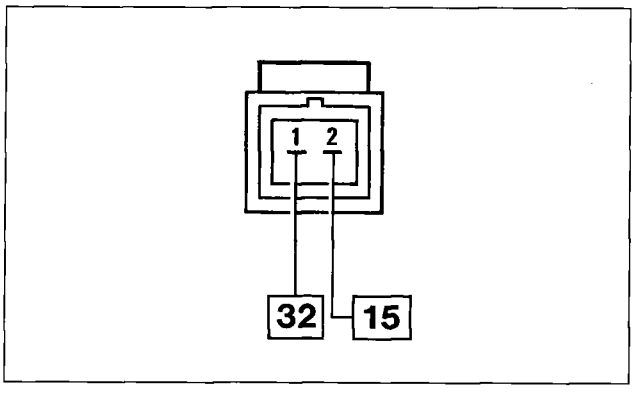

P4F32CJ02

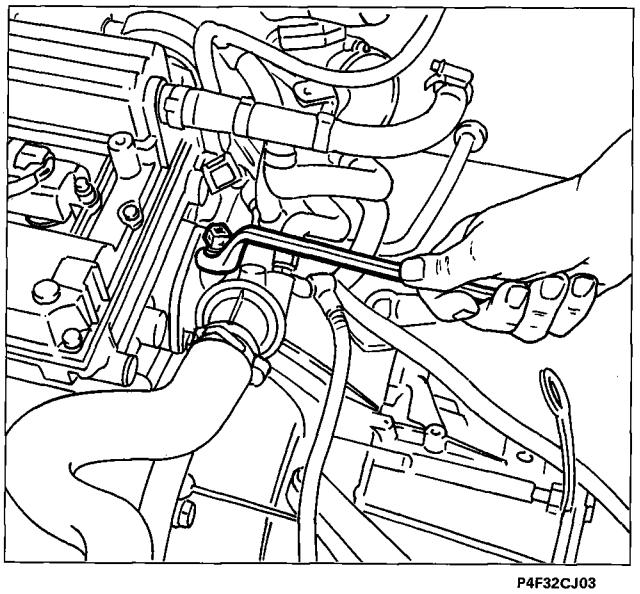

P4F32CJ03

COOLANT TEMPERATURE SENSOR (Bosch 0.280.130.055)

The sensor is fitted on the thermostat.
It is made up of a brass casing which acts as protection for the actual resistive element, made up of an NTC type thermistor (Negative Temperature Coefficient) whose electrical resistance decreases as the temperature increases.
The reference voltage is 5 Volt: since the control unit inlet circuit is designed as a voltage divider, the reference voltage is divided between a resistance in the control unit and the actual sensor.
As a result the control unit is capable of evaluating the variations in resistance for the sensor through changes in the voltage.

Recovery

During starting a temperature of T= 20°C is assumed and is increased by 1°C every 6 seconds until a temperature of T= 80°C is reached.

With the ignition switch in the ON position and the number of revs above zero, the radiator cooling fan is always working.

Additional provisions

The self-adjustment functions for the mixture strength and the idle are disabled.

Wiring connector

The numbers indicate the corresponding control unit pins.

Removing-refitting

- Disconnect the electrical connector from the sensor;
- undo the sensor, removing it from its housing.

Tightening torque 1.5 daNm

Take great care to refit the sensor correctly and over the electrical connection because the information transmitted by the sensor is also used by the control unit for the operation of the radiator fan.

BUTTERFLY CASING (Hitachi GL007817)

The butterfly casing has the task of metering the quantity of supplied to the engine (and consequently the power developed) according to the request from the driver via the accelerator.
The butterfly casing is fixed to the inlet manifold by four bolts: the butterfly is kept open through levers which produce a slight opening which, in line with the pedal travel, creates small butterfly openings with the pedal slightly pressed and large angles with the pedal very depressed.
With the pedal completely released (engine decelerating or idling) the additional air needed is supplied by the engine idle adjustment solenoid valve: under these circumstances the butterfly opening lever is in contact against an anti-tamper screw which prevents the butterfly from locking in the closed position.

To prevent the formation of ice on the butterfly and in the opening connected to the PCV valve, the butterfly casing is heated with a small quantity of coolant, coming from the engine thermostat, circulating in a chamber inside the actual casing.
There is also the PCV valve (Positive Crank Ventilation) for the oil vapour recirculation system fitted on the butterfly casing and the butterfly position sensor.

The anti-tamper screw is adjusted during fluxing in the Factory and should never be tampered with.

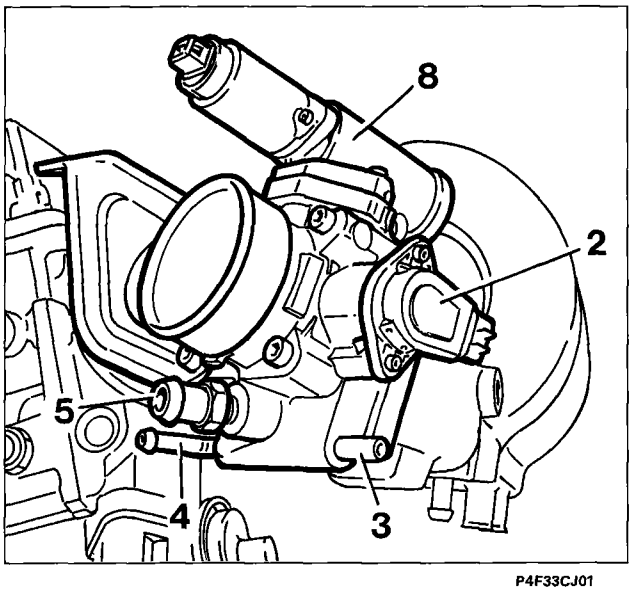

P4F33CJ01

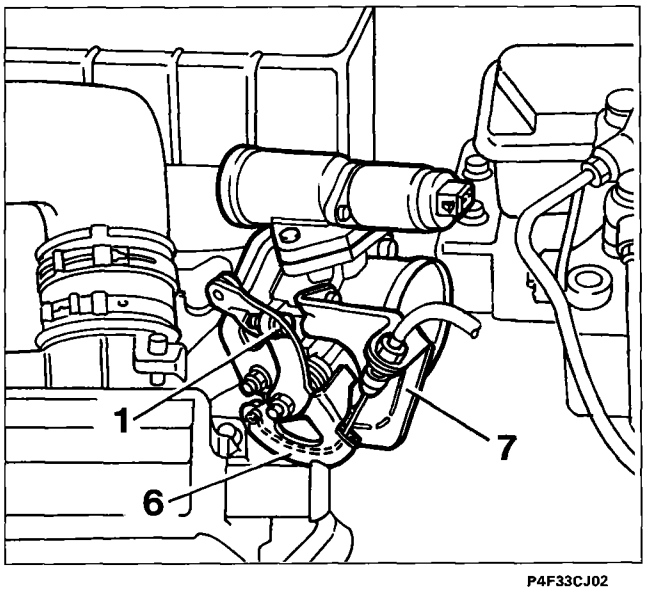

P4F33CJ02

1. Anti-tamper screw
2. Butterfly position sensor
3. Engine coolant inlet
4. Engine coolant outlet
5. PCV valve
6. Accelerator control lever
7. Accelerator cable adjustment bracket
8. Engine idle speed adjustment solenoid valve

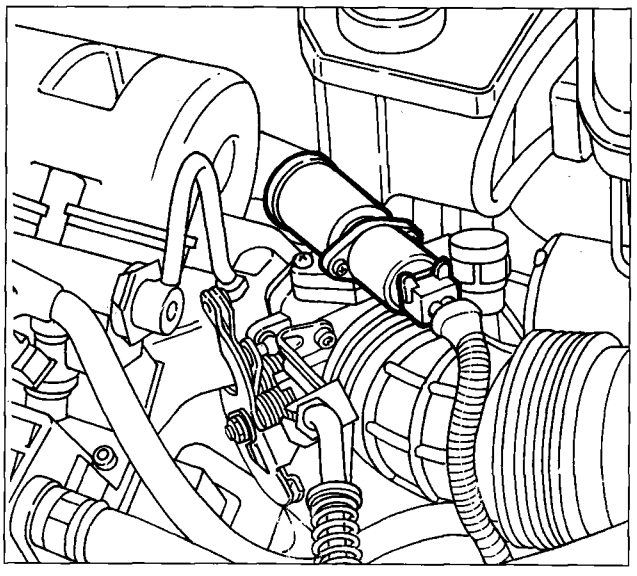

P4F34CJ01

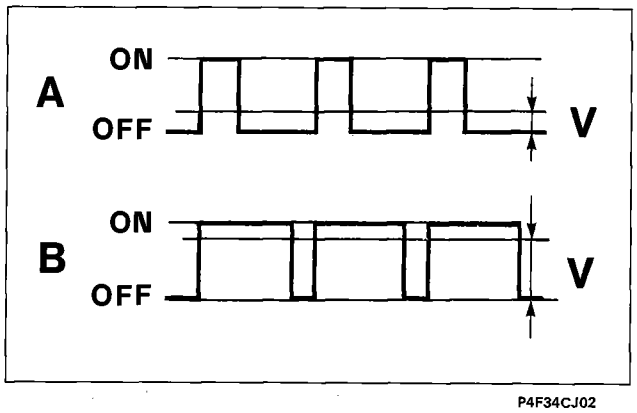

P4F34CJ02

Duty cycle operation

A: **OF**F signal prevalent = low effective value
ON signal prevalent = high effective value
B: effective value

V:

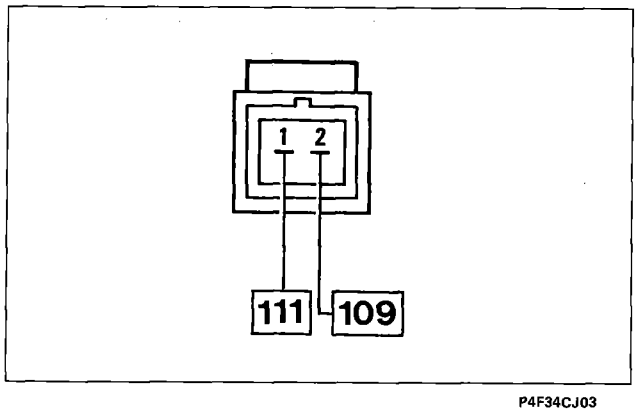

P4F34CJ03

ENGINE IDLE SPEED ADJUSTMENT SOLENOID VALVE (Hitachi GL 326716)

The solenoid valve, fitted on the butterfly casing, shutters the air flow which, takes the air from upstream of the butterfly and returns it downstream: it has the task of ensuring additional air for the engine with the butterfly closed, in all conditions where this is necessary (idle, deceleration).

The solenoid valve is the proportional type, the shutter is fixed to a metal core, surrounded by an electrical winding.

NOTE *The procedure of removing-refitting the solenoid valve is given overleaf, together with the procedure for the butterfly position sensor.*

Operating principle

The position of the shutter depends on the intensity of the effective value of the current passing through the winding which creates a magnetic field which attracts the core.

The variation in the effective value is obtained by modulating the electrical supply of the winding (duty cycle operation).

This operation consists in altering the voltage from the battery value (12 Volt nominal) to zero at a frequency where the shutter is not capable of moving following the instant value of the voltage, but reaches an intermediate position, which depends on the proportion between the voltage presence and absence times.

Recovery

A pre-fixed opening value is fixed for the solenoid valve.

Wiring connector

The numbers indicate the corresponding control unit pins.

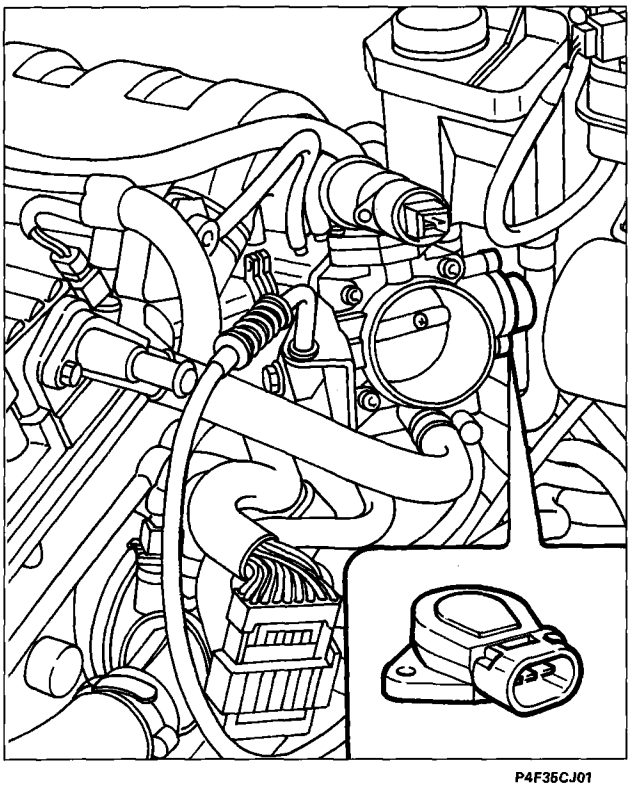

P4F35CJ01

BUTTERFLY POSITION SENSOR (Hitachi GL 326686)

The sensor is made up of a single track potentiometer where the moving part is rotated by the accelerator butterfly shaft.

Wiring connector

The numbers indicate the corresponding control unit pins.

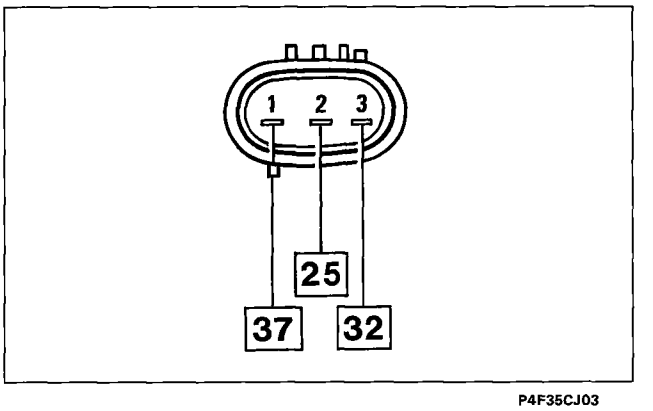

P4F35CJ03

Recovery: a butterfly opening value equal to 7°is assumed as a fixed value.

Additional provisions: the self-adjustment function for the idle is de-activated.

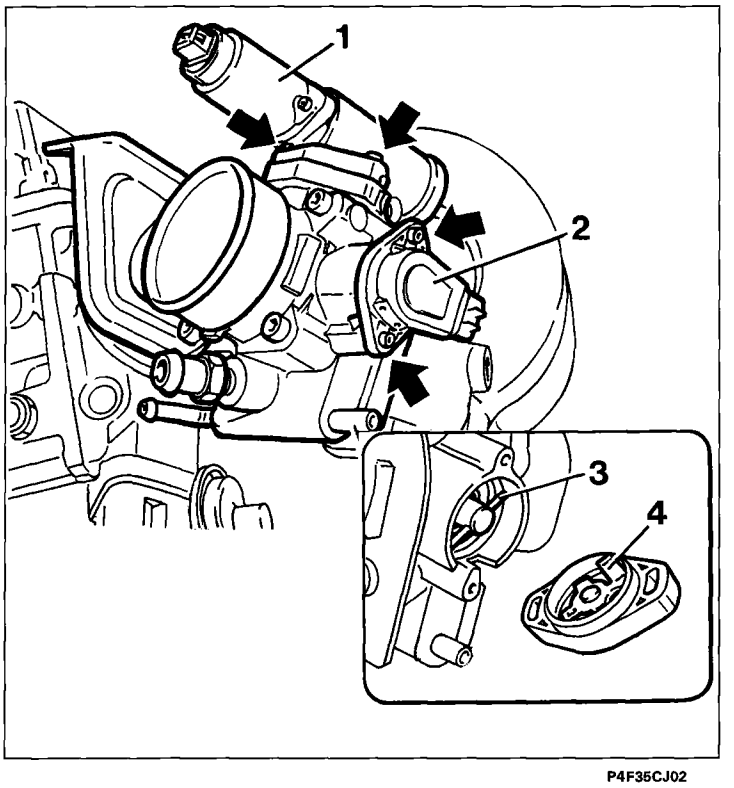

P4F35CJ02

Removing-refitting engine idle adjustment solenoid valve and butterfly position sensor

- Undo the fixing bolts (arrow) to remove the engine idle adjustment solenoid valve (1);
- undo the fixing bolts (arrow) to remove the butterfly position sensor (2).

NOTE *When refitting the butterfly position sensor, take care that the operating lever fixed to the butterfly shaft (3) is above the sensor driver (4), as shown in the diagram.*

Idle speed adjustment solenoid valve 0.6 - 0.3 daNm

Butterfly valve position sensor 0.2 - 0.3 daNm

FUEL MANIFOLD (WEBER CB 93)

The fuel manifold, which has the function of distributing the fuel to the injectors, is produced through aluminium die-casting and incorporates the housings for the injectors and for the pressure regulator. The fuel inlet has a conical seal fixing bolt.
The fuel is recirculated by means of a pipe inside the manifold, connected at one end to the regulator and at the other end to the external return pipe to the tank.

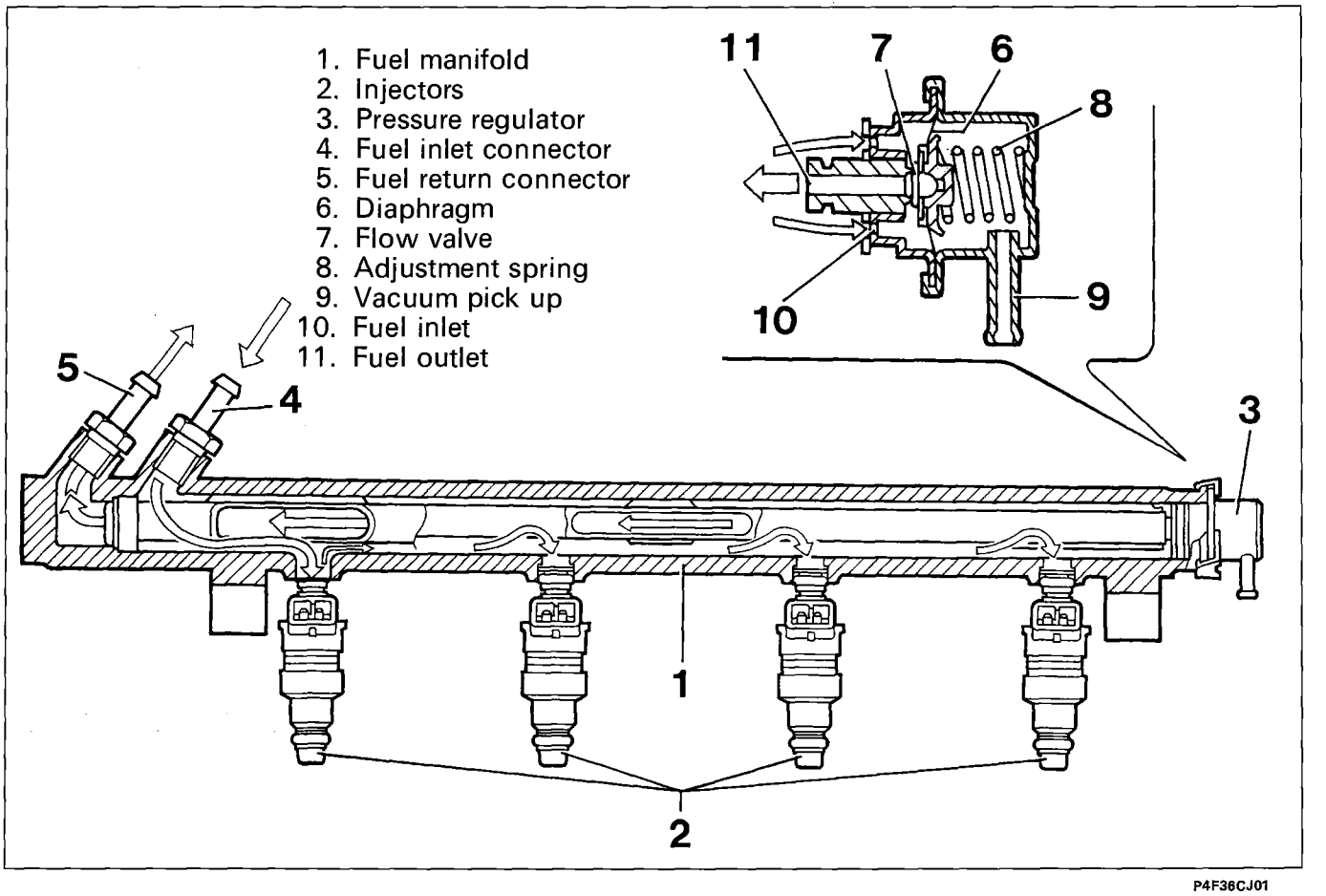

P4F36CJ01

FUEL PRESSURE REGULATOR (RPM 40)

This is a differential diaphragm device, regulated in the Factory, at a pressure of 3.00 ± 0.05 bar.
The fuel, under pressure, coming from the pump, exerts a force on the flow valve (7) opposed by the calibrated spring (8). When the calibration pressure is overcome, the flow valve opens and the excess fuel returns to the tank, thereby stabilizing the pressure in the circuit.
In addition, by means of the intake (9), the vacuum in the inlet manifold (at which the *nose* of the injector also finds itself), acts on the regulator diaphragm, reducing the load exerted by the calibration spring. In this way, the pressure differential existing between the fuel and the environment (inlet manifold), in which the injector finds itself in every engine operating condition, is kept constant.
Consequently, the injector flow rate (for a certain supply voltage) depends only on the injection time established bythe control unit.

NOTE *The pressure is assumed by the control unit as a fixed parameter: as a result, the regulator should never be tampered with in order not to alter the mixture strength for the engine.*

Removing-refitting fuel manifold

NOTE *Before operating on the supply circuit, it is advisable to discharge the pressure from the actual circuit by disconnecting the pressure regulator vacuum inlet pipe from the inlet manifold and applying a slight vacuum.*

Remove the fuel manifold complete with injectors and pressure regulator by carrying out the following operations:

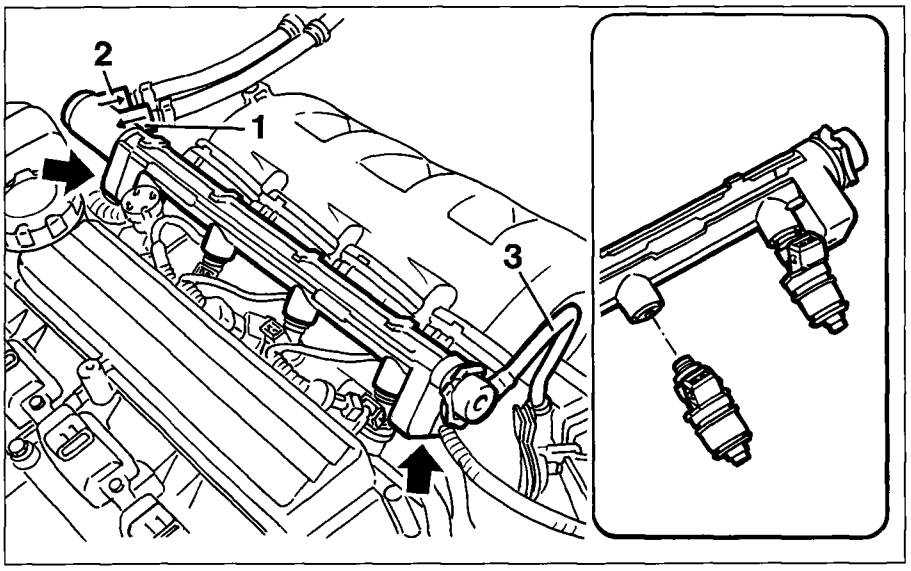

P4F37CJ01

- disconnect the fuel supply pipe (1) and the return pipe (2) from the respective connectors at the fuel manifold;
- disconnect the vacuum inlet pipe (3) from the pressure regulator;
- disconnect the electrical connectors from the injectors;
- undo the two fixing bolts (arrow) for the fuel manifold and remove it complete with injectors and pressure regulator.

The injectors do not have clips: to remove them simply slide them out of their housings (see detail).

ELECTRIC FUEL PUMP (Walbro-Marwal MSS071)

The pump is housed inside the fuel tank in a special container which also support the fuel level gauge and is equipped with a gauze filter at the pump inlet.

For a detailed description and the removing-refitting procedure, refer to the fuel supply section for the 1581 16v version.

FUEL FILTER (Bosch A.450.024.262)

The fuel filter is fitted under the floor panel, on the fuel supply pipe. For the removing-refitting procedure, refer to the Fuel System section for the 1581 16V version 16v.

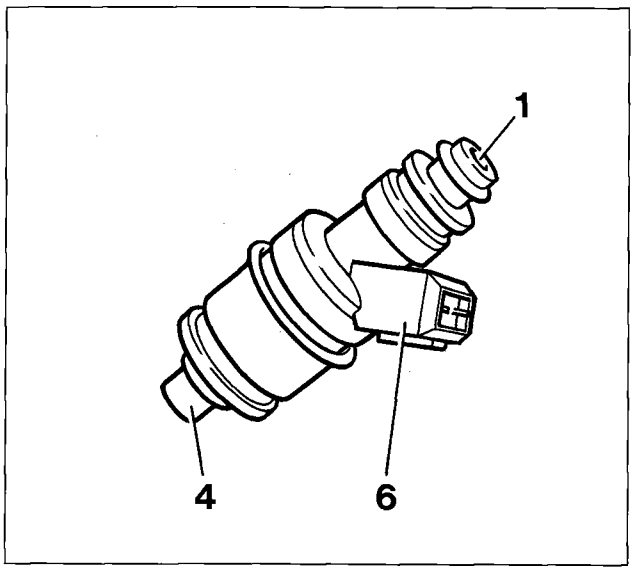

P4F38CJ01

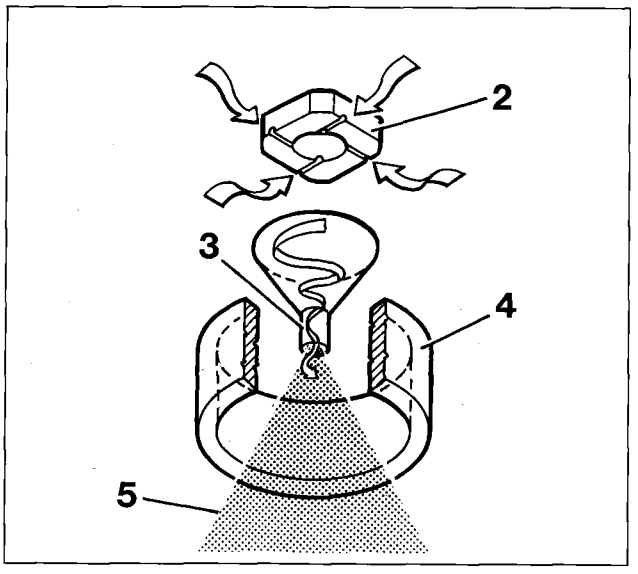

P4F38CJ02

INJECTORS
(Hitachi JS21-1B)

The injector has the task of supplying the quantity of fuel needed for the operation of the engine: the fuel is injected into the inlet manifold, immediately upstream of the inlet valve.
The injector is the "top-feed" type with the supply of fuel from the rear of the casing, where the electrical winding connected to the connector (6) is also housed.
When the current passes through the winding, the magnetic field which is produced attracts the shutter causing the opening of the injector and the flow of fuel.
As the pressure differential between the inside and outside of the injector is constant (thanks to the presence of the regulator), the quantity of fuel supplied, like the electrical supply voltage, only depends on the opening time, established by the control unit.
The end section of the injector or *nose* (4) is fitted with a jet (3) which endows the fuel with a rotary motion, thanks to a deflector (2) with four aperatures arranged tangentially.

1. Fuel inlet
2. Deflector
3. Jet
4. Nose
5. Jet of fuel
6. Electrical connector

Wiring connector

The numbers indicate the corresponding control unit pins

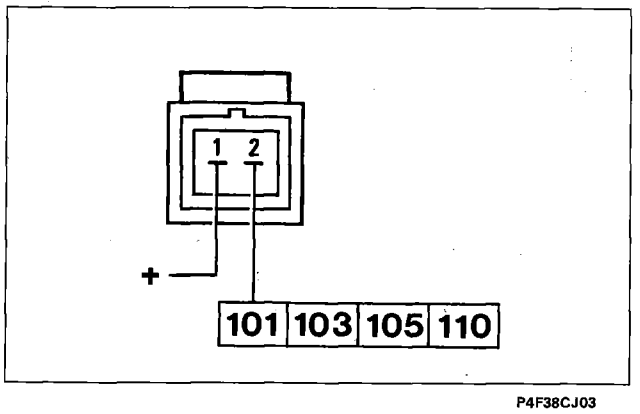

P4F38CJ03

Checking the resistance

The resistance of the injector may be measured by disconnecting the connector and connecting an ohmmeter as shown in the diagram.
Resistance value: 12 ± 1.2 ohm.

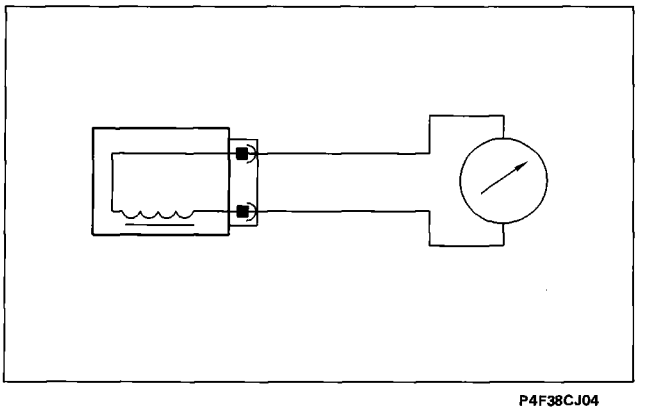

P4F38CJ04

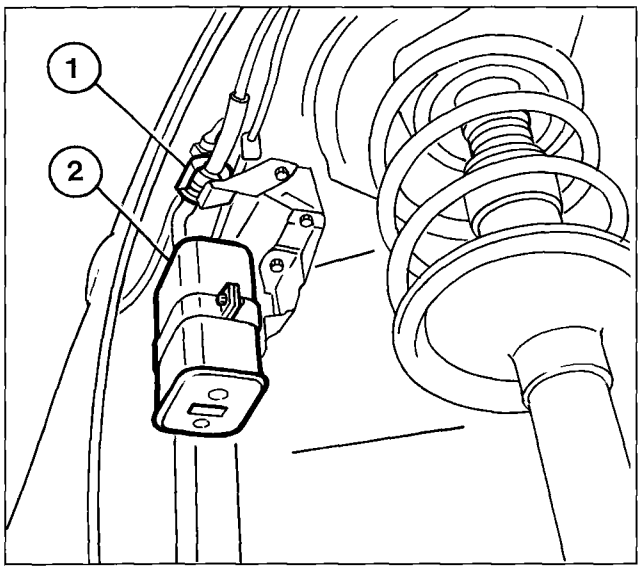

P4F39CJ01

CHARCOAL FILTER AND FUEL VAPOUR CUT OUT SOLENOID VALVE

The charcoal filter and the solenoid valve are located inthe right wheel arch.

For the description of the charcoal filter, refer to the Fuel System section for the 1581 16V version 16v.

1. Vapour cut out solenoid valve
2. Charcoal filter

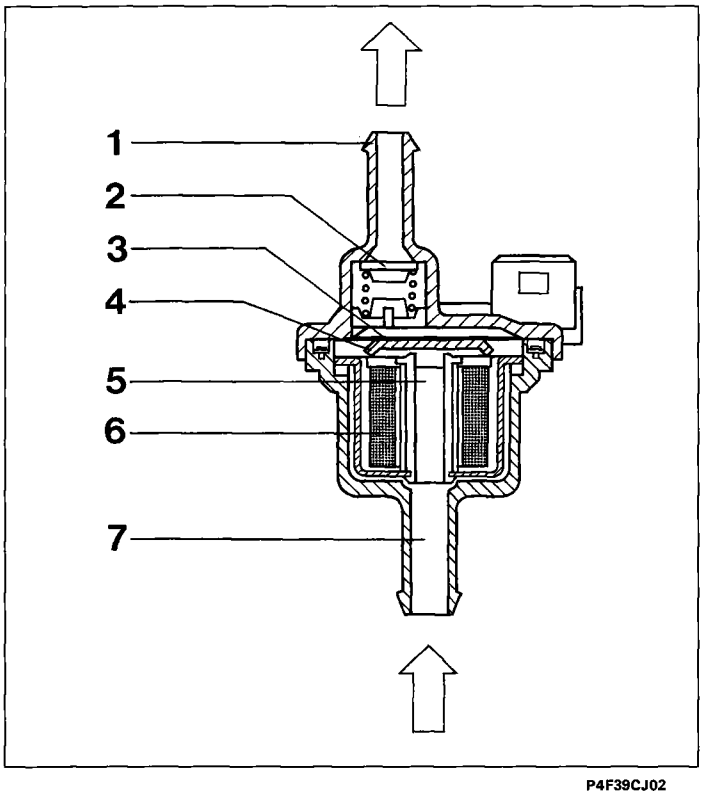

P4F39CJ02

1. Inlet connector
2. One-way valve
3. Spring
4. Shutter
5. Outlet aperture
6. Solenoid valve
7. Outlet union

Vapour cut out solenoid valve (Bosch 0.280.142.300)

The function of this valve is, via the electronic control unit, to control the quantity of petrol vapours drawn in by the charcoal filter and directed to the inlet manifold.

If there is no supply, this valve finds itself in the open position; when the ignition key is turned to the ON position, it closes preparing for operation. In effect, the solenoid valve (6), if energized, attracts the shutter (4), which, overcoming the spring (3) loading, closes the aperture (5), preventing the flow of petrol vapours.

The operation is controlled by the electronic control unit in the following way:

- during starting the solenoid valve remains closed, preventing the petrol vapours from enriching the mixture too mush;
- with the engine started, the electronic control unit sends the solenoid valve a signal which modulates the opening.

In this way the control unit controls the quantity of petrol vapours sent to the inlet, preventing substantial variations (above all during idling) of the mixture strength.

NOTE *The solenoid valve must be fitted correctly: the arrow on its casing should be positioned towards the vacuum pick up on the inlet manifold.*

Removing-refitting

The procedure is valid for both the charcoal filter and the vapour cut out solenoid valve.

- Raise the vehicle;
- remove the right front wheel;
- remove the right front wheel arch lining;
- undo the bolt which fixes the component concerned to the mounting bracket;
- remove the electrical connection and the pipes connected;
- remove the component involved.

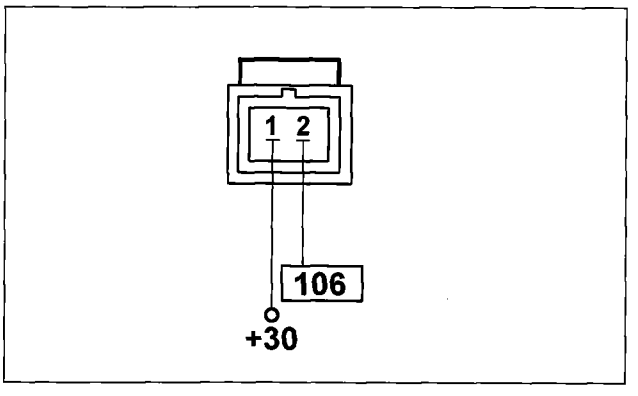

P4F40CJ01

Wiring connector

The numbers indicate the corresponding control unit pins

MULTI-PURPOSE VALVE AND SAFETY AND VENTILATION VALVE

These valves belong to the anti-evaporation system and fuel vapour recirculation. For a description of them, refer to the Fuel System section for the 1581 16V version.

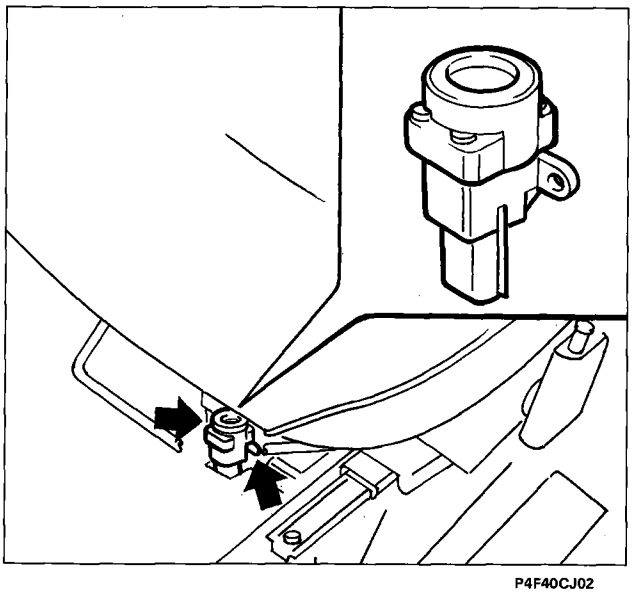

P4F40CJ02

INERTIA SWITCH

In order to improve the degree of safety for the occupants of the vehicle in the case of an impact, the vehicle is equipped with an inertia switch, located inside the passenger compartment, under the driver's seat.

This sensor reduces the risk of fire (as a result of fuel escaping from the injection system) by de-activating the electric pump which supplies the injection circuit.

For the complete description and the removing-refitting procedure, refer to the Fuel System section for the 1581 16V engine.

After even an apparently slight impact, if there is a smell of fuel or leaks are noticed from the fuel system, do not turn the switch back on, but search for the cause of the fault and correct it to preven the risk of fire.

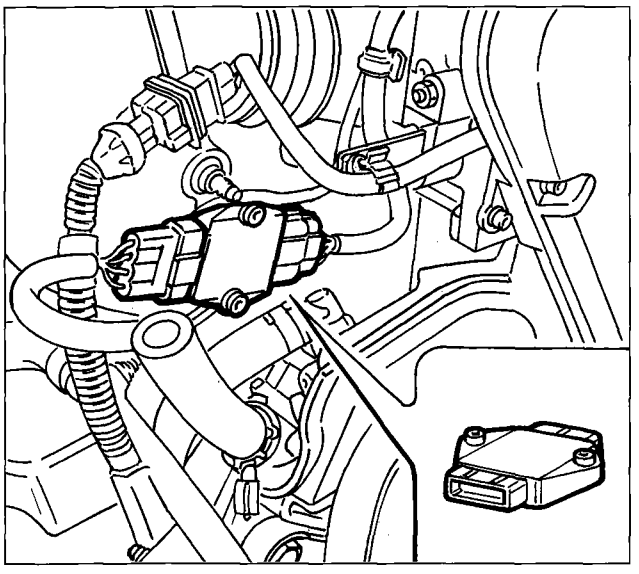

P4F41CJ01

IGNITION POWER MODULE (Hitachi DIS4-06A)

The power module, located at the side of the inlet manifold, is basically an electronic switch which, by means of impulses coming from the control unit, controls the current in the ignition coil primary winding.
Through a particular circuit, it limits the current which circulates in the coil primary winding when the maximum value is reached in order to reduce the heating of the actual module.
To prevent the coil from overheating if the ignition is switched on with the engine not started up, the module has a device which places it in the rest position when the ignition impulses arriving from the control unit cease.

Wiring connector

A: module inlet B: module outlet C: ignition coil

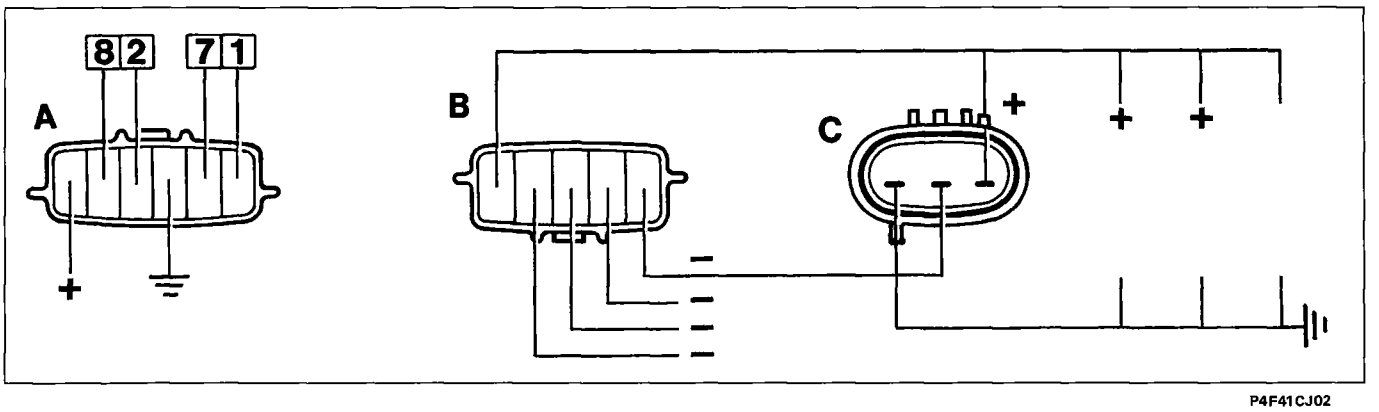

P4F41CJ02

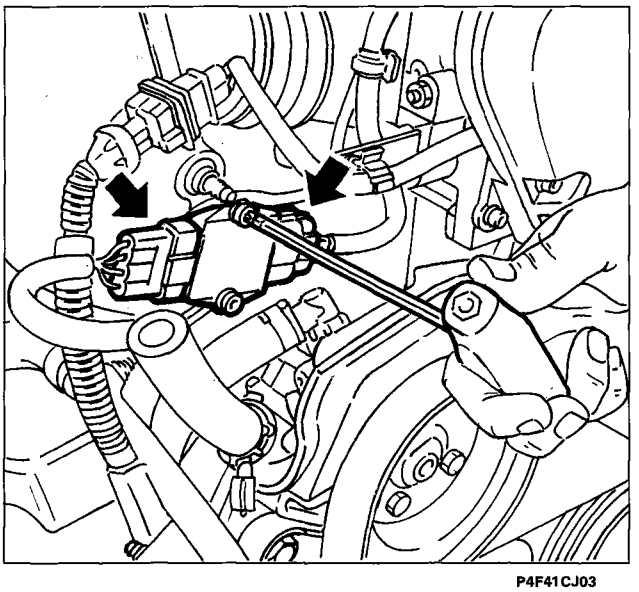

P4F41CJ03

Removing-refitting

Remove the ignition power module by carrying out the following operations:

- disconnect the electrical inlet and outlet connectors (arrows);
- undo the two fixing bolts and remove the module.

Tightening torque 0.3 daNm

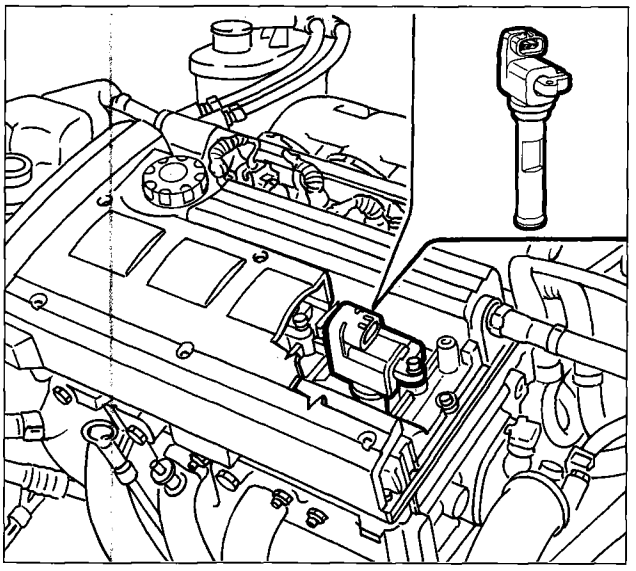

P4F42CJ01

IGNITION COILS (Hitachi CM14-301)

The coil used is the closed magnetic circuit type, with the windings in a plastic container immersed in epoxide resin.

The coil is connected directly to the spark plug by meansof a silicon extension with high dielectric properties.

The earth for the secondary circuit is achieved with a special cable as the coil is insulated by the cylinder head.

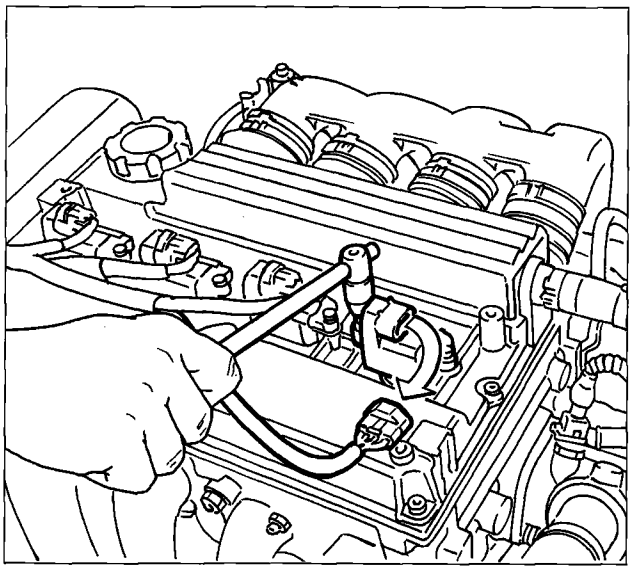

P4F42CJ02

Removing-refitting

Proceed with the removal of the ignition coils by carrying out the following operations:

- disconnect the electrical connector;
- undo the two fixing bolts and remove the coil, extracting it from the housing.

NOTE *The coil is equipped with a high dielectric power silicon extension, which has a pressure contact with a spring loading inside.*

Do not dismantle the two components in order not to risk losing the internal contact or getting it dirty.

In the case of a replacement, it is not necessary to separate the coil from the extension because the coil/extension unit is supplied in one piece as spares.

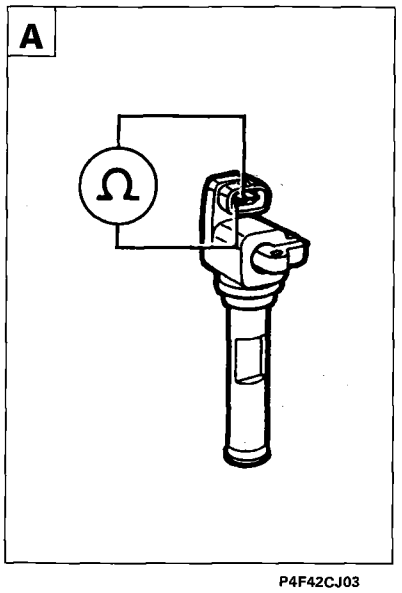

P4F42CJ03

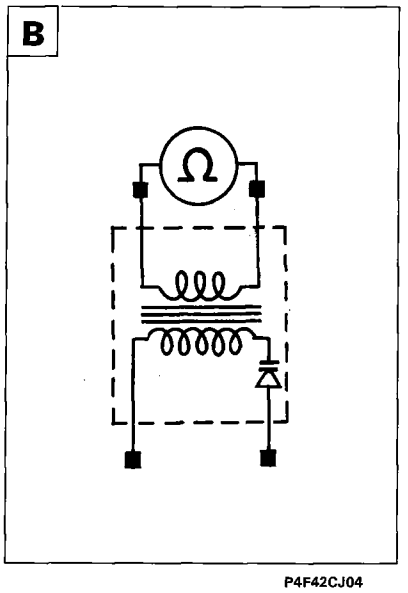

P4F42CJ04

Checking coil primary circuit resistance

The resistance is checked by operating as shown in the diagrams.

Primary resistance: 0.6 ± 0.06 ohm

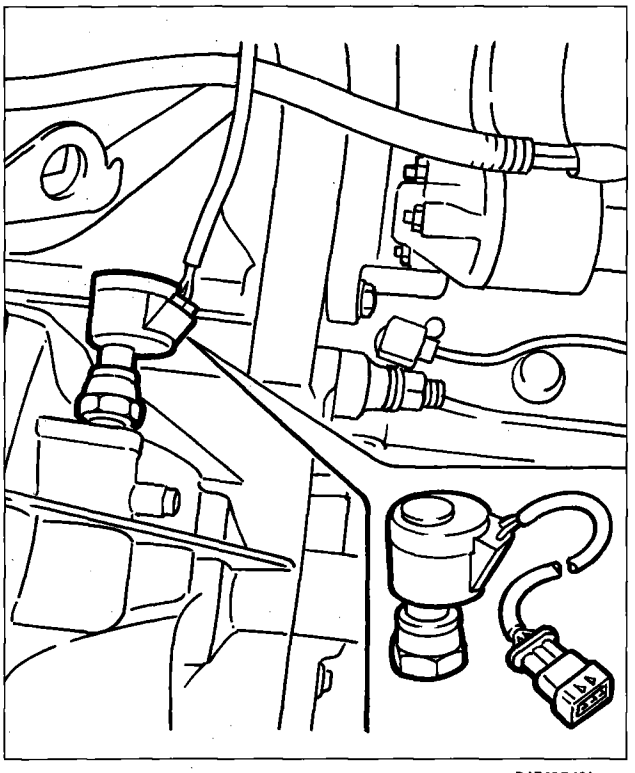

P4F43CJ01

VEHICLE SPEED SENSOR (Jaeger)

The sensor is located at the outlet of the differential, by the left drive shaft joint and transmits information to the control unit concerning the vehicle speed: the signal is also used for the operation of the speedometer.

The sensor is the Hall effect type and is calibrated so that each impulse corresponds to a distance of one metre: on the basis of the frequency of the impulses it is therefore possible to know the speed of the vehicle.

Recovery

Speed set = 0

Additional provisions

The self-adjustment of the idle is disabled.

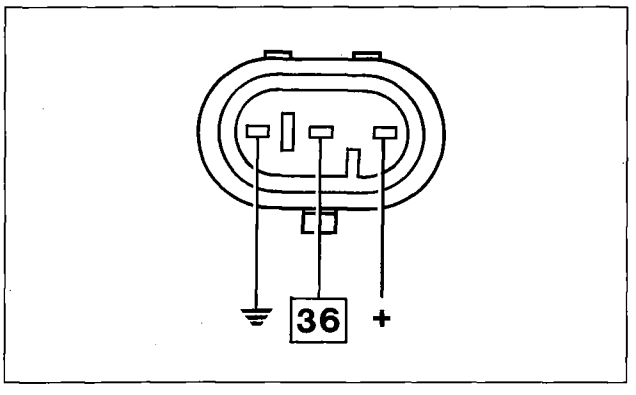

P4F43CJ02

Wiring connector

The numbers indicate the corresponding control unit pins.

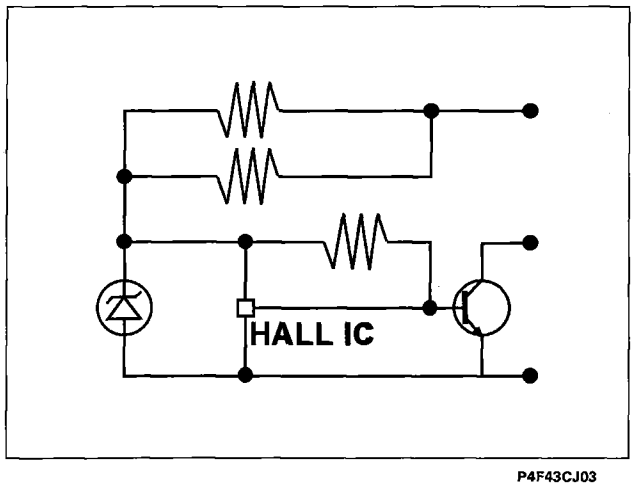

P4F43CJ03

Removing-refitting

Disconnect the electrical connector and undo the vehicle speed sensor casing, removing it from its housing.

Tightening torque 2.5 daNm

Wiring diagram

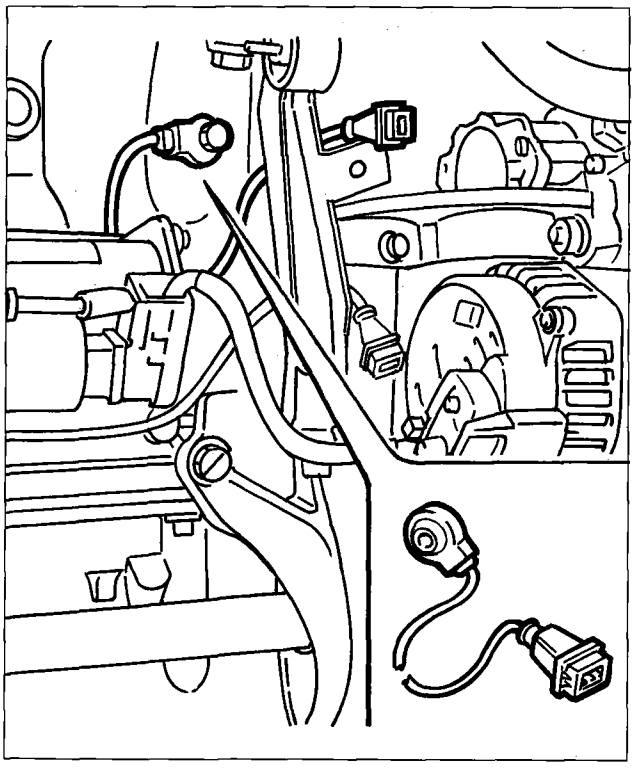

P4F44CJ01

DETONATION SENSOR (KNE-03)

This is a piezoelectric type sensor fitted on the engine crankcase symmetrically in relation to the pair of cylinders 1-2 and 3-4.

This position is determined by the need to detect the onset of detonation in the same way in all the cylinders.

When the engine is knocking, crankcase vibrations of a particular frequency are produced.

The phenomenon produces mechanical repercussions on a piezoelectric crystal which sends a signal to the control unit which, on the basis of this signal, reduces the ignition advance until the phenomenon disappears. Later, the advance is gradually returned to the basic value.

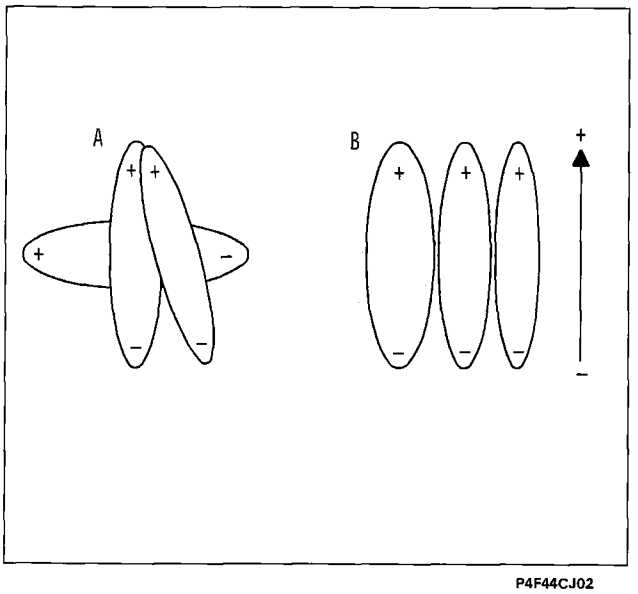

P4F44CJ02

Operating principle

The molecules of a quartz crystal feature electrical polarization.

In rest conditions (A) the molecules do not assume a particular position.

When the crystal is subject to pressure or an impact (B), the greater the pressure to which the crystal is subjected, the more they assume a direction. This produces a voltage in the crystal.

A: Rest position

B: position under pressure

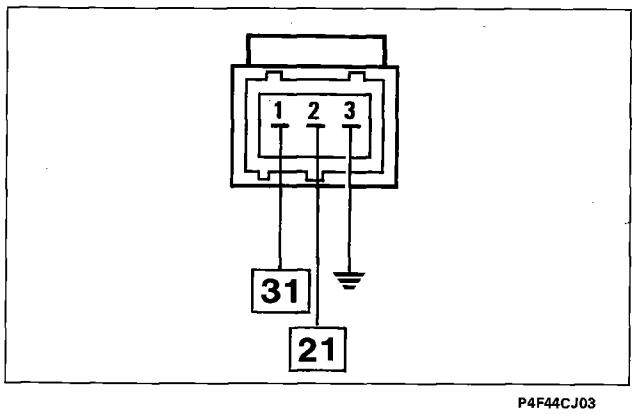

P4F44CJ03

Wiring connector

The numbers indicate the corresponding control unit pins.

Removing-refitting

Disconnect the electrical connector, undo the bolt fixing the detonation sensor and remove it.

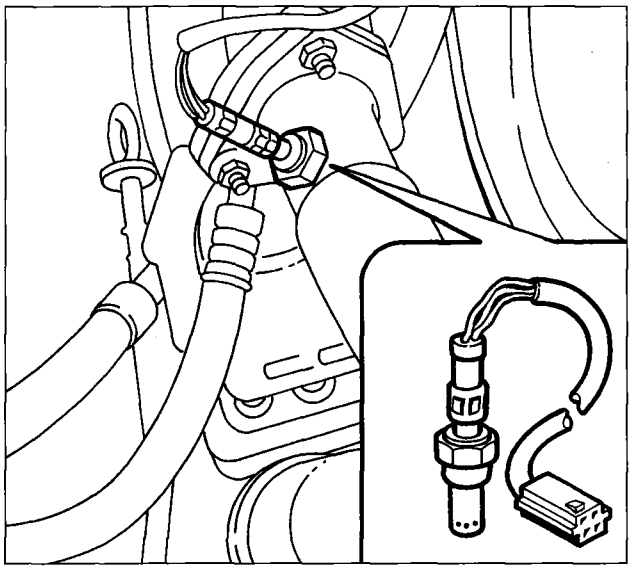

P4F45CJ01

LAMBDA SENSOR (NGK 0ZA112-A3)

The lambda sensor measures the oxygen content in the exhaust gases: it is fitted on the exhaust pipe upstream of the catalytic silencer.

For the detailed description of the operating principle of the sensor, refer to the Fuel System section for the 1581 16V version.

The sensor can be rapidly put out of action by the presence of even a slight amount of lead in the petrol.

Recovery

The reading of the sensor voltage is disabled (open-loop).

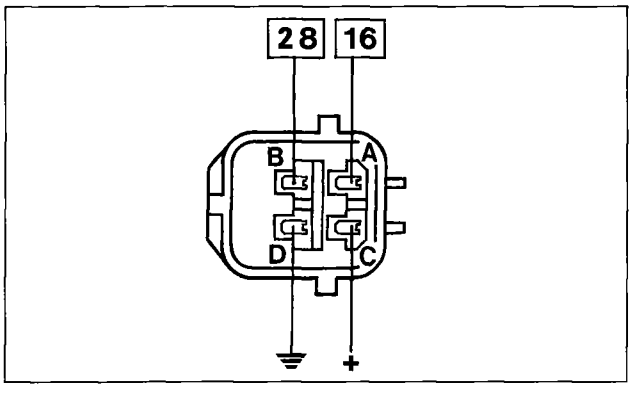

P4F45CJ02

Wiring connector

The numbers indicate the corresponding control unit pins.

Removing-refitting

Disconnect the electrical connector, then undo the Lambda sensor and remove it from its housing.

Tightening torque 3.5 - 4.5 daNm

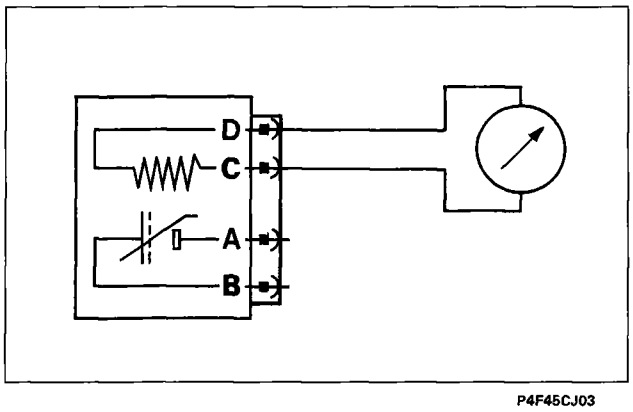

P4F45CJ03

Checking the resistance

The resistance of the sensor heater can be measured by disconnecting the connector and connecting an ohmmeter as shown in the diagram.

Resistance: 4 - 5 ohm at 20°C

CHECKS, ADJUSTMENTS AND REPAIR OPERATIONS ON THE HITACHI SYSTEM

THE FOLLOWING PRECAUTIONS SHOULD BE OBSERVED WHEN WORKING ON A VEHICLE EQUIPPED WITH A HITACHI INJECTION/IGNITION SYSTEM:

- *do not start up the engine with the terminals for the electrical connections not properly connected or slack at the battery poles;*
- *do not use a rapid battery charger to start the engine;*
- *never disconnect the battery from the electrical system with the engine running;*
- *to charge the battery, disconnect it first from the electrical equipment;*
- *if the vehicle goes in a drying oven after painting at temperatures in excess of 80°C, it is necessary to remove the engien control unit from the vehicle;*
- *do not connect/disconnect the multiple connector for the control unit with the ignition switch in the ON position;*
- *always disconnect the negative battery lead before carrying out electrical welding on the vehicle.*

The system has a memory which is directly supplied by the battery, even with the ignition switched off, where the values obtained during auto-adjustment are memorized. The operation of disconnecting the battery causes this data to be lost and it can only be acquired again after a certain distance: this operation should therefore be limited as far as posssible.

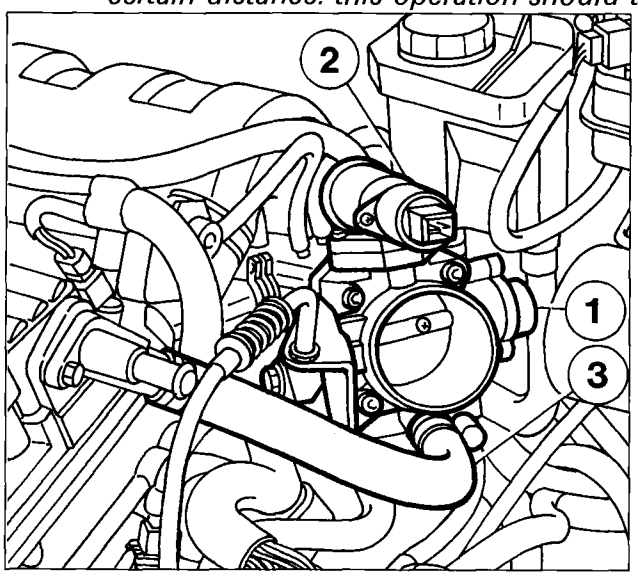

P4F46CJ01

REMOVING-REFITTING BUTTERFLY CASING

Proceed as indicated for the removal of the air flow meter, removing the meter complete with two hoses.
Then proceed as follows:

- disconnect the electrical connectors from the butterfly position sensor (1) and from the idle speed adjustment solenoid valve (2);
- remove the band fixing the blow-by pipe (3), cylinder heead cover side, and remove the pipe;

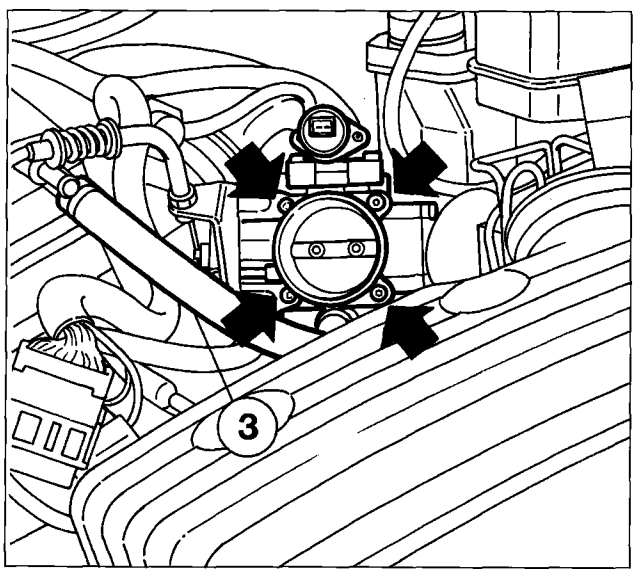

P4F46CJ02

- undo the four bolts fixing the butterfly casing (arrow) to the inlet manifold;
- release the end of the accelerator cable from the control lever;
- remove the coolant connecting pipes from the inlet and outlet pipes, sealing them as appropriate;
- lastly, remove the blow-by pipe (3) from the butterfly casing.

FUEL CIRCUIT PRESSURE CHECKS

Checking fuel regulation pressure

Disconnect the pipe coming from the filter (shown by the arrow) from the injector fuel manifold.

Place pressure gauge 1895890000 and the two taps (1) and (2), as illustrated in the diagram, between the end of the disconnected pipe and the fuel manifold.

Supply the electric pump with the engine switched off through the F/L Tester "active diagnosis" function.
Alternatively, proceed as follows:
- extract the pump relay from the socket
- make a connection as shown in the diagram using a bridge designed for this purpose.

The pressure reading on the gauge should stabilize in these conditions at 3.0 bar ± 0.2 bar.
If the pressure is too low, carry out the next test.

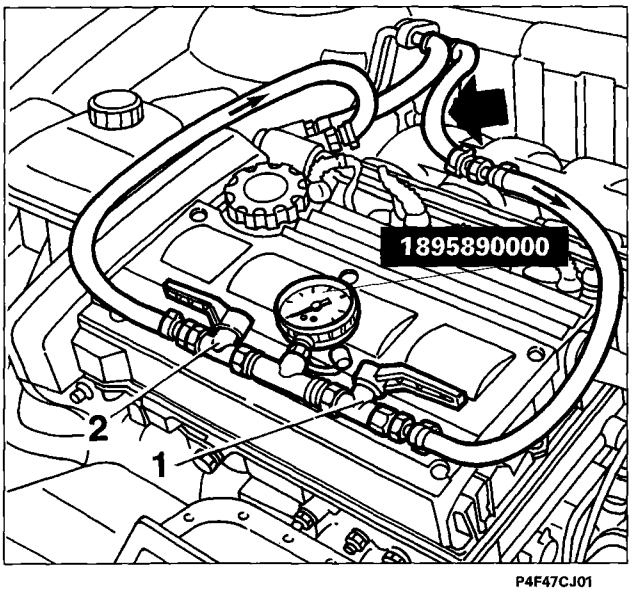

P4F47CJ01

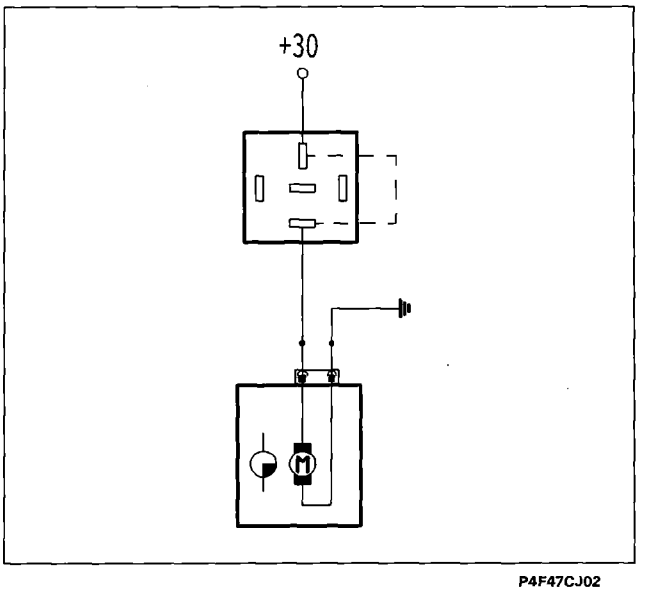

P4F47CJ02

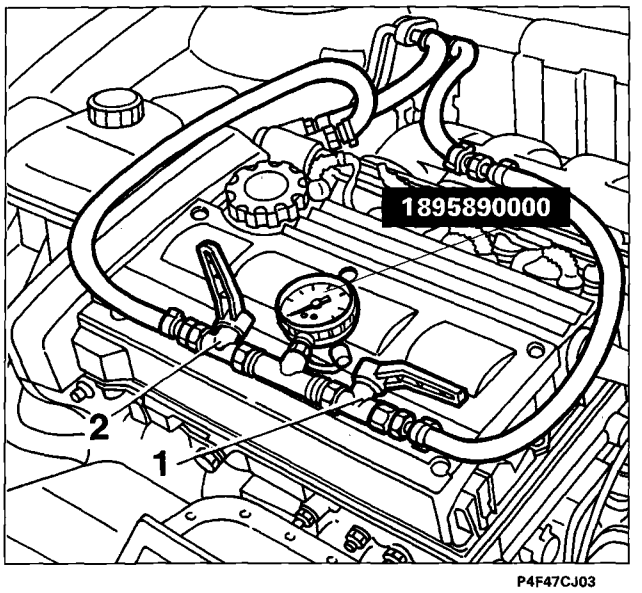

P4F47CJ03

Checking maximum fuel supply pressure (or electric pump efficiency)

Keeping the same connections as for the previous test, close the tap (2) located downstream of the pressure gauge, operate the electric pump with the engine switched off, as described for the previous test: the pressure should reach 5 bar and not exceed 7 bar (pump safety valve setting). If this is not the case, replace the electric pump because it is defective.

If in the previous test the pressure measured was above 3.0 bar then it is necessary to:

- disconnect the fuel return pipe from the pressure regulator and replace it temporarily with a pipe which, inserted in the filler, allows the return of the fuel to the tank;
- supply the electric pump with the engine switched off as described in the previous test, then read the pressure reached on the gauge:
  1. if it reaches 3.0 bar the fuel return pipe to the tank has to be replaced because it is obstructed or bent;
  2. if it exceeds 3.0 bar then the pressure regulator has to be replaced because it is defective.

NOTE *At the end of the tests, refit the pump relay in its housing, if it has been removed.*

Checking pneumatic section of the pressure regulator

Let the engine idle.

The reading on the pressure gauge should be around 2.5 bar.

If this is not the case, the air connecting pipe between the pressure regulator and the inlet manifold is damaged and the regulator itself is defective and should be replaced.

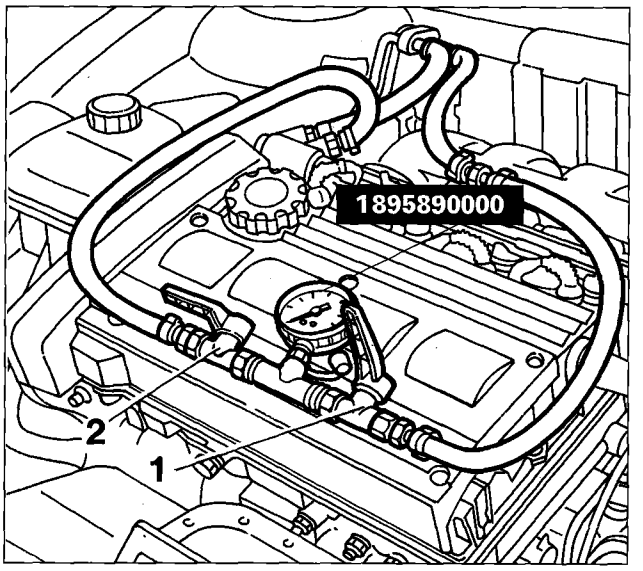

P4F48CJ01

Injector leakage test

In order to check whether the injectors are dripping, carry out the connection as describedfor the pressure regulation test. Then proceed as follows:

- supply the electric pump with the engine switched off;
- fully tighten the tap (1) upstream of the pressure gauge once the regulation pressure is reached: in this way the pressure in the fuel manifold and the injectors will be the same;
- switch off the electric pump and observe whether, as soon as the pressure stabilizes (i.e. decreases slightly), it remains constant for around 60 sees; if this is not the case, there is a leak from one or more of the injectors or from a connector.

If this is the case, remove the injector and the fuel manifold from the inlet manifold, maintaining the connection with the pressure gauge.

Repeat the previous test leaving the tap (1) open.

Supply the engine with the electric pump switched off and observe whether any connecting sections are leaking.

Replace any injector which is dripping and/or renew the defective seal for the connection which is leaking.

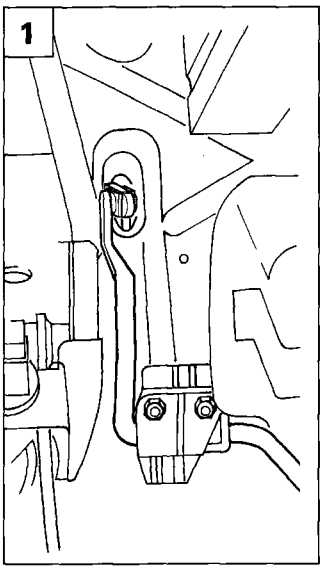

P4F49CJ01

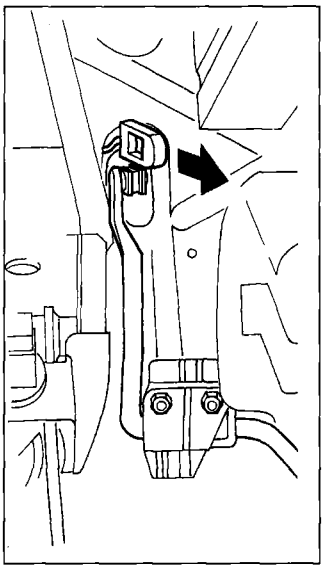

P4F49CJ02

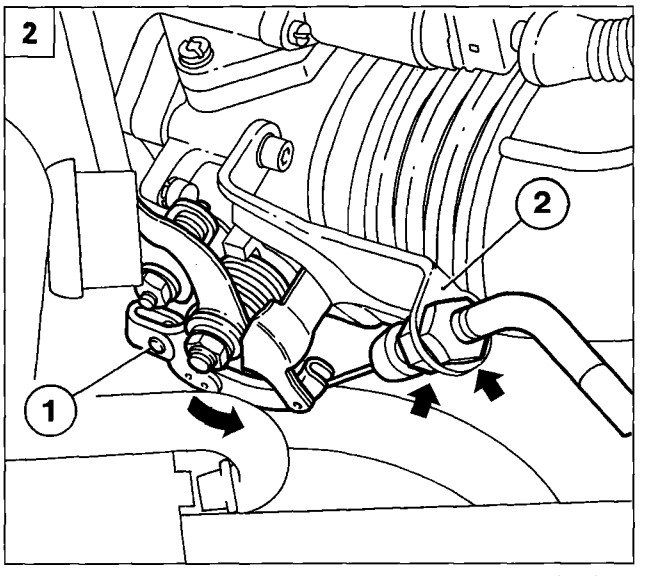

P4F49CJ03

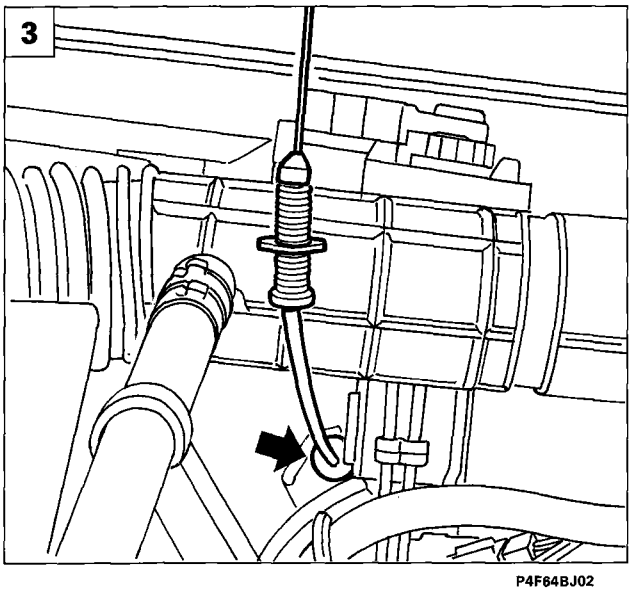

P4F64BJ02

REMOVING-REFITTING ACCELERATOR CABLE

Disconnect the battery lead and proceed as described below:

1. Working from inside the vehicle, disconnect the cable from the anchorage on the accelerator pedal.
2. In the engine compartment, rotate the butterfly valve control lever and release the accelerator cable (1) retainer. Undo the adjustment nut and the lock nut, then remove the cable from the mounting bracket (2).
3. Remove the flexible buffer from the anchorage opening in the partition and extract the complete accelerator cable.

When refitting, adjust the accelerator cable as described in the paragraph "Accelerator cable adjustment".

REMOVING-REFITTING ACCELERATOR PEDAL

For the procedure of removing-refitting the accelerator pedal, refer to the Fuel System section for the 1581 16V version.

REMOVING-REFITTING FUEL TANK

For the procedure of removing-refitting the fuel tank, refer to the Fuel System section for the 1581 16V version, with the difference being that there are two fuel vapour recirculation to be disconnected (see also "Diagram showing fuel anti-evaporation circuit" at the beginning of this section).

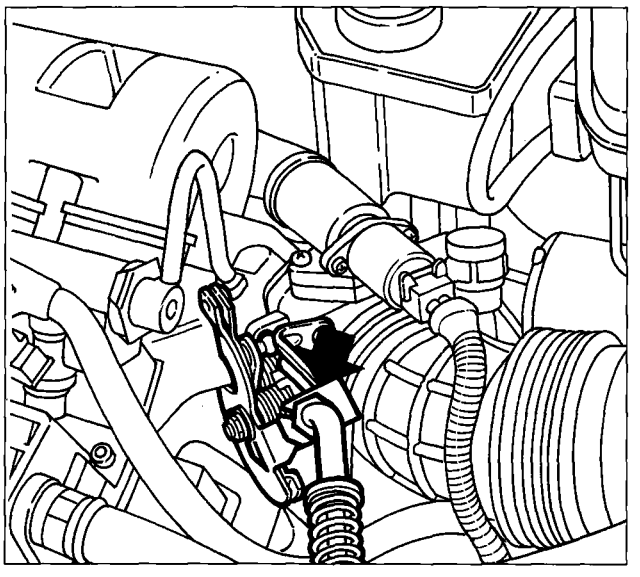

P4F50CJ01

ACCELERATOR CABLE ADJUSTMENT

Adjust the accelerator cabler by carrying out the following operations:

- loosen the lock nut below the bracket;
- acting on the adjustment nut (arrow), regulate the accelerator cable clearance: **tighten to reduce** the clearance, **loosen** to **increase** the clearance;
- when the adjustment has been carried out, lock the lock nut.

CONTROLLING CONCENTRATION OF EMISSIONS

The system manages the advance, the carbon monoxide (CO) content and the air idle flow rate without the possibility for adjustments so no manual regulation is possible.
However, a check on the content of the exhaust gases, upstream and downstream of the catalyzer, can provide precious indications on the operating conditions of the injection/ignition system, the engine parameters and the catalyzer.

Checking idle concentration of CO and HC upstream of the catalytic silencer

To check the concentration of carbon monoxide (CO) and unburnt hydrocarbons (HC) upstream of the catalyzer, proceed as follows:

1. Undo the cap located on the exhaust pipe, upstream of the catalyzer, and tighten the tool in its place.
2. Connect a suitably calibrated CO-tester to the tool.
3. Start up the engine and let it reach operating temperature.
4. Check that the engine speed is as planned.
5. Check that the idle concentration of CO is within the recommended values (see table); if this is not the case, it is necessary to check:
   - that the Lambda sensor is working properly, using the F/L Tester;
   - for the presence of air penetration in the area surrounding the Lambda sensor housing;
   - the injection and ignition system **(in particular the state of wear of the spark plugs).**
6. In the same conditions, check that the concentration of HC is less than 500 p.p.m.
7. If these values are not found, proceed to check the engine, paying special attention to:
   - the valve gear timing;
   - the engine compression.

NOTE *The engine is fitted with hydraulic tappets for the automatic recovery of the clearances.*

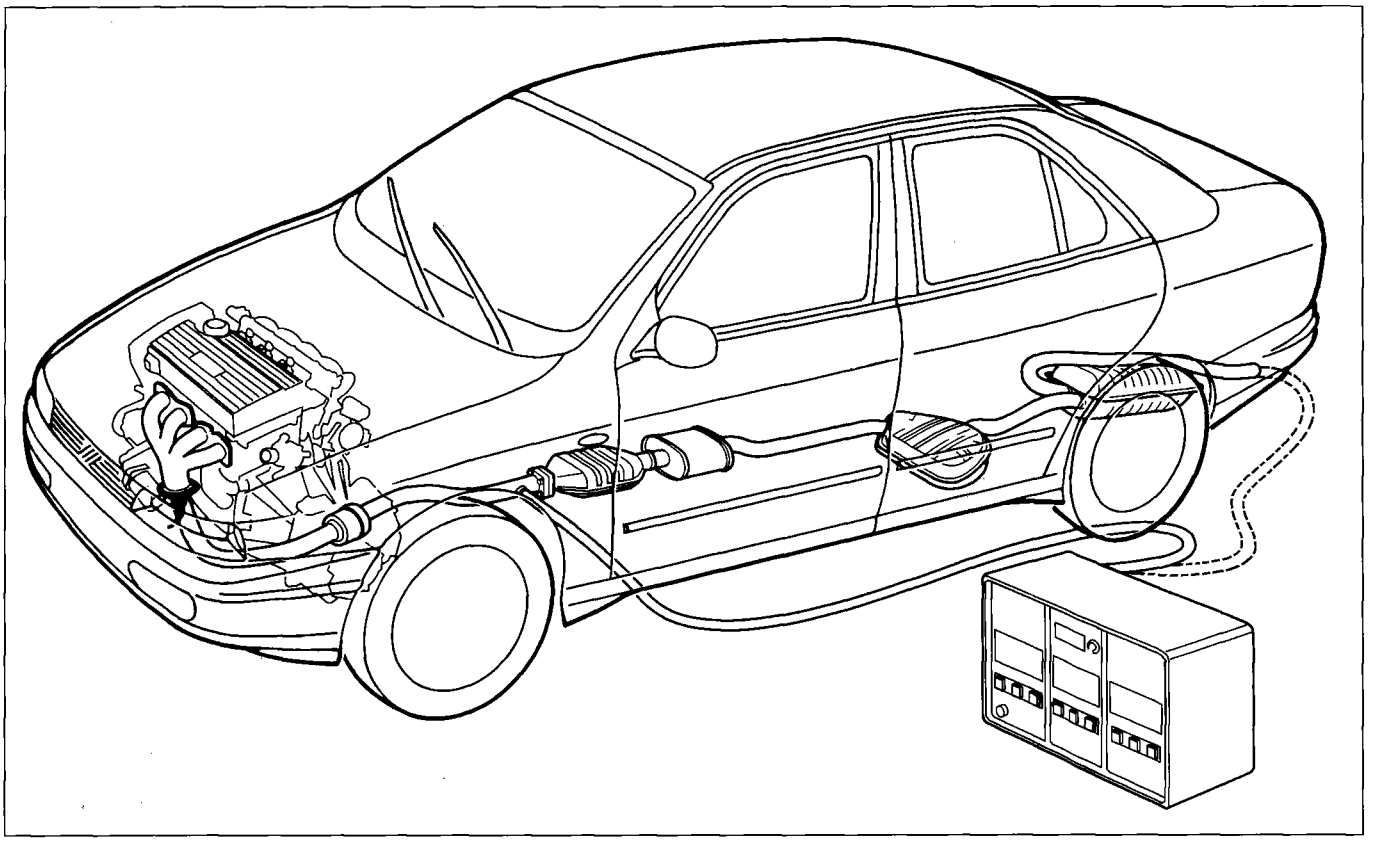

P4F51CJ01

Table summarizing pollutant emission tolerance values

	CO(%)	HC (p.p.m.)	CO_2 (%)
Upstream of the catalyzer	0,4 ÷ 1	< 500	> 12
Downstream of the catalyzer	< 0,35	< 90	> 13

Checking concentration of CO and HC at the exhaust

The concentration of carbon monoxide (CO) and unburnt hydrocarbons (HC) in the exhaust is measured by inserting a suitably calibrated sensor at least 30 cm into the end section of the exhaust pipe.

1. Check that the idle CO and HC concentrations are those recommended (see table).

2. If the HC value is outside of the tolerances given, whilst that measured previously upstream of the catalyzer was okay, the engine parameters are held to be correct and therefore the cause of the problem should be sought in the decreased efficiency of the catalyzer.

CHECKING ENGINE IDLE SPEED

If the engine idle speed does not correspond to the recommended figure, as the system is the self-regulating type it is not possible to carry out any adjustments; it is necessary to check that the accelerator linkage is correctly adjusted and the fault should be searched for through a complete fault diagnosis using the Fiat/Lancia Tester.

CHECKING IGNITION ADVANCE

In order to check the ignition advance angles at different speeds it is necessary to use the Fiat/Lancia Tester diagnostic equipment.

Copyright by Fiat Auto

DIAGNOSIS

The system is equipped with autodiagnosis which has the function of checking any irregular state for the following components:

Actuators
injectors
coils
fuel vapour solenoid valve
engine idle adjustment solenoid valve
electric fuel pump relay
climate control compressor relay (if fitted)
electric fan low speed relay
electric fan high speed relay (if fitted)

Sensors
engine rpm sensor
engine timing sensor
air flow meter
Lambda sensor
coolant temperature sensor
butterfly position sensor
vehicle speed sensor
detonation sensor

Location of Fiat/Lancia Tester connector

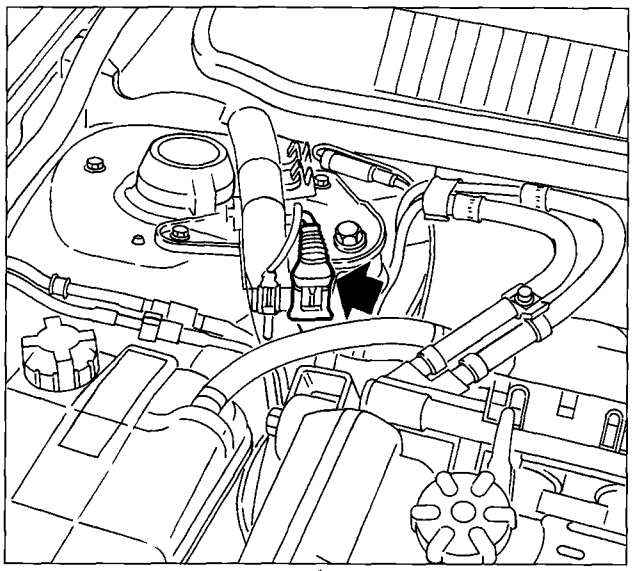

P4F52CJ01

The detection of a fault, if confirmed, involves it being memorized permanently, in addition to the exclusion of the sensor from the system until it is restored.

The detection of a confirmed fault usually involves the warning light in the dashboard coming on: the warning light goes out when the fault conditions disappear.

Working with the Fiat/Lancia Tester it is possible to carry out a complete fault diagnosis of the system, consisting of three stages:
1. display of a series of functional parameters (engine running);
2. display of the errors and their cancelling;
3. activation of several actuators (active diagnosis).

1. Parameters displayed

The following engine parameters are displayed:
- air flow rate,
- coolant temperature,
- butterfly sensor position,
- Lambda sensor voltage,
- battery voltage,
- Lambda sensor state,
- vehicle speed,
- engine rpm,
- air flow rate/maximum flow rate,
- ignition advance,
- fuel vapour cut out solenoid valve duty cycle,
- injection time,
- engine load (TP),
- objective engine idle speed,
- engine idle speed adjustment solenoid valve duty cycle,
- Fiat CODE state,
- errors present.

2. Detecting and cancelling faults

Detecting faults
This is carried out during the basic functions which manage the sensor/actuator.

Memorizing the error and structure of the errors memory
The errors are memorized in the control unit in the order in which they occur.
The following is memorized for each of them:
- the error code (component and type of error),
- the error counter,
- the time elapsed since the fault was detected,
- two environmental conditions (specific for each type of fault) detected at the moment of the breakdown.

Classification of the defect
If a defect is recognized for the first time and the error state persists for a certain length of time, the defect is memorized as "permanent". If this defect later disappears, it is memorized as "not present". The classification of a defect as "permanent" activates the recovery functions: when the fault disappears, normal opeartion is resumed.
The presence ofa "permanent" fault also involves the system failure warning light in the dashboard coming on.

Frequency counter
The counter, which goes from 0 to 127 and is activated in the case of a fault, is decreased each time the engine is started up and the fault does not reappear: when the counter reaches zero, the fault is automatically cancelled from the memory.

Failure warning light
The failure warning light comes on when there is at least one"permanent" fault in the memory.

NOTE *During starting, the light is:*

- on for 1 second,
- off for 0.1 seconds,
- on again for 0.5 seconds and then kept on/off permanently according to whether "permanent" errors are present or not.

Cancelling of the errors
When the frequency counter reaches zero, the fault is cancelled and so are the parameters associated with it.
The immediate cancellation of the entire memory takes place in the following cases:
- by means of the"cancel errors memory" commande sent by the Fiat/Lancia Tester;
- by interrupting the electrical supply for the control unit (disconnecting the battery or the control unit connectors) for at least 60 seconds.

3. Activating the actuators (active diagnosis)

The following actuators are activated with the engine switched off via the Fiat/Lancia Tester:
- injectors (in the order cyls. 1, 2, 3 and 4),
- coils (in the order cyls. 1, 2, 3 and 4),
- electric fuel pump relay,
- fuel vapour solenoid valve,
- engine idle speed adjustment solenoid valve,
- system failure light,
- rev counter signal,
- climate control compressor relay (if fitted),
- electric fan low speed relay,
- electric fan high speed relay (if fitted),
- phase transformer solenoid valve (for versions with phase transformer).

Copyright by Fiat Auto

BOSCH MOTRONIC M 2.10.4 M.P.I. INTEGRATED INJECTION/IGNITION SYSTEM 1

- Introduction 1
- General description of the injection system 1
- General description of the ignition system 1
- 2Injection/ignition system operational diagram
- Functions of the system 3

SYSTEM MANAGEMENT STRATEGIES 4

- Adjustment of the injection times 4
- Ignition advance adjustments 4
- Controlling cold starting 4
- Controlling enrichment during acceleration 4
- Fuel cut-off during deceleration (Cut-off) 4
- Controlling engine idle speed management 5
- Limiting the maximum number of revs (protection outside of revs) 5
- Controlling combustion via the Lambda sensor 5
- Fuel vapour recovery 6
- Controlling the detonation 6
- Controlling the phase transformer 6
- Connection with the climate control system 6
- Self-adjustment of the system 6
- Connection with the engine immobilizer device (Fiat CODE) 7
- Autodiagnosis 7

Diagram showing information entering/leaving the injection/ignition system control unit and sensors/actuators 8

Diagram showing fuel supply circuit 9

Diagram showing air intake circuit 10

Diagram showing fuel anti-evaporation circuit 11

Recirculation system for gases coming from the engine crankcase 12

Engine exhaust assembly diagram 13

Injection/ignition system wiring diagram 14

Connection for control unit/ignition coils and injectors 16

Location of injection/ignition system components 16

FUSES, RELAYS AND EARTH POINTS 17

INJECTION/IGNITION SYSTEM COMPONENTS 18

- Injection/ignition system wiring 18
- Injection/ignition electronic control unit 18
- Ignition coils 20
- Timing sensor 22
- Rpm and TDC sensor 23
- Detonation sensors 24
- Electric fuel pump 25
- Fuel filters 26
- Fuel supply manifold and pressure regulator 26
- Injectors 27
- Butterfly casing 28
- Butterfly valve position sensor 29
- Engine idle speed actuator 30
- Air temperature sensor 31
- Flow meter 32
- Coolant temperature sensor 33
- Speedometer sensor 34
- Phase transformer 34
- Lambda sensor 36
- Charcoal filter and fuel vapour cut out solenoid valve 37
- Inertia switch 38
- Multi-purpose valve and safety and ventilation valve 39

CHECKS-ADJUSTMENTS AND REPAIR OPERATIONS FOR THE BOSCH MOTRONIC M 2.10.4 INJECTION/IGNITION SYSTEM OUTSIDE OF THE FAULT DIAGNOSIS WITH THE FIAT/LANCIA TESTER 39

- Adjustment of the accelerator cable 39
- Removing-refitting accelerator cable 40
- Removing-refitting accelerator pedal 40
- Removing-refitting fuel manifold complete with injectors and pressure regulator 41
- Checks on the fuel supply circuit 42
- Removing-refitting fuel tank 44
- Checking engine idle speed 44
- Checking concentration of pollutant emissions 44

DIAGNOSIS 46

- Detecting faults 46
- Memorizing the error and structure of the errors memory 46
- Classification of the defect 46
- Frequency counter 46
- Signalling a failure 46
- Cancelling the error 47
- Fault diagnosis with the Fiat/Lancia Tester 47
- List of errors 47
- Parameters displayed 48
- Active diagnosis 48
- Recovery 48
- Permanent memory 48

Copyright by Fiat Auto

BOSCH MOTRONIC M 2.10.4 M.P.I. INTEGRATED INJECTION/IGNITION SYSTEM

Introduction

The Bosch Motronic system fitted on the 1998 5 cylinder 20 valve engine belongs to the category of static advance, inductive discharge, digital electronic ignition systems integrated with sequential, timed type electronic injection systems.

This system has a single electronic control unit, one set of wiring and one set of common sensors.

Its function is to inject the exact quantity of petrol, into the inlet manifold, upstream of the inlet valves, designed to mix with the air introduced into the cylinder so that the correct mixture strength is obtained.

The Motronic M 2.10.4 system guarantees efficient operation making it possible to achieve optimum performance and consumption and to reduce the harmful emissions through a response in real time to the different engine operating conditions.

General description of the injection system

The essential conditions which must always be satisfied in the preparation of the air/fuel mixture for the smooth running of engines with controlled ignition systems are, basically, two:

1. the metering (air/fuel ratio) should be kept as constant as possible and close to the stoichiometric value, in order to ensure the required rapid combustion avoiding useless fuel consumption.
2. the mixture should be composed of petrol vapours atomized in the air as finely and uniformly as possible.

In the Bosch Motronic M 2.10.4 system the injector nozzles perform the task of distributing the petrol atomizing it into minute droplets.
Since the air intake may find itself in varying conditions of absolute pressure, it is necessary to adjust the quantity of petrol injected in order not to alter the weight ratio between the air and the petrol.
The constancy of the above ratio is achieved by varying the value of the fuel supply pressure, by means of a regulator, according to the value of the vacuum of the air in the inlet manifold, so that the difference between the two pressures is constant for all engine operating conditions.

As far as the optimum metering, on the other hand, is concerned, it is calculated after the following measurements:

- exact quantity of air drawn in by the flow meter (air flow meter);
- engine rotation speed through the rpm sensor;
- acceleration required by means of the butterfly valve position sensor;
- temperature of the engine coolant via the sensor on the thermostat support;
- measuring the oxygen content of the exhaust gases using the Lambda sensor.

This information is processed by a micro-calculator in the injection/ignition electronic control unit which determines the basic injection time by means of experimentally obtained values which are stored in a special area of the above mentioned control unit memory.

General description of the ignition system

The ignition system is the static advance inductive discharge type (i.e. without a high tension distributor) with power modules inside the electronic control unit.

The system has a single coil for each spark plug; the advantages of this solution are:

- less electrical overloading
- guarantee of constant discharge at each spark plug

The control unit memory contains the entire series of optimum advance values which the engine can adopt in its operating range on the basis of the engine speed and load conditions.

Copyright by Fiat Auto

DIAGRAM SHOWING OPERATION OF INJECTION/IGNITION SYSTEM

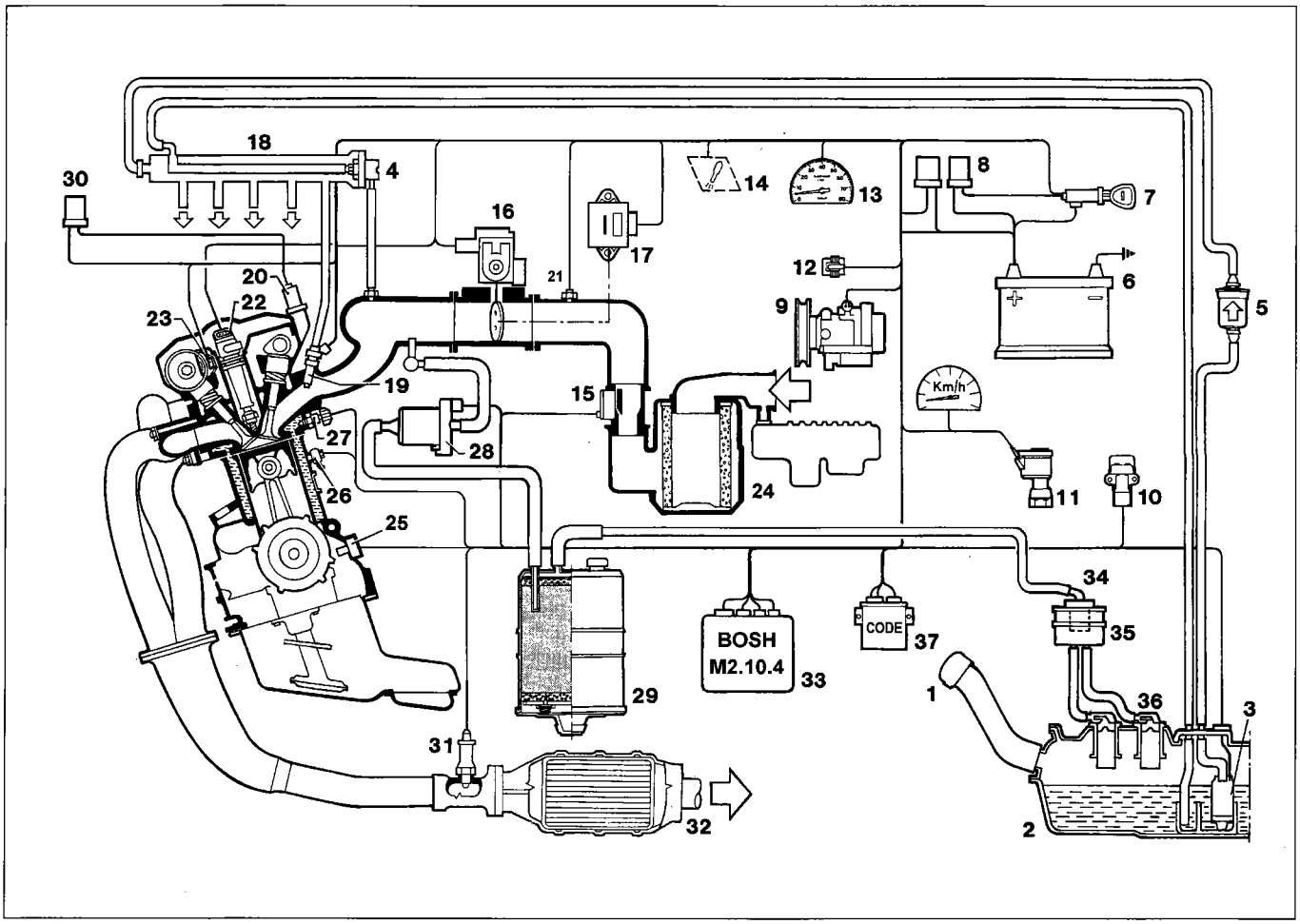

P4F02DJ01

1. Filler cap with safety valve
2. Fuel tank
3. Electric fuel pump
4. Fuel pressure regulator
5. Fuel filter
6. Battery
7. Ignition switch
8. System relay feeds
9. Climate control compressor
10. Inertia switch
11. Vehicle speed sensor
12. F/L Tester connector (diagnostic socket)
13. Rev counter
14. System failure warning light
15. Air flow meter
16. Engine idle speed actuator
17. Butterfly valve position sensor
18. Fuel manifold
19. Injectors
20. Timing variator solenoid valve
21. Intake air temperature sensor
22. Ignition coil
23. Engine timing sensor
24. Air filter and resonators
25. Engine rpm sensor
26. Detonation sensors
27. Coolant temperature sensor
28. Fuel vapour cut out solenoid valve
29. Charcoal filter
30. Phase transformer solenoid valve relay
31. Lambda sensor
32. Catalytic silencer
33. Injection/ignition control unit
34. Multi-purpose valve
35. Fuel vapour separator
36. Float valve
37. Fiat CODE control unit

These values have been obtained experimentally, by means of a long series of practical tests carried out on prototypes at the test bench to identify the advances at which it is possible to achieve the best compromise between the conflicting requirements of maximum power and reduced consumption and harmful exhaust emissions.
The optimum advances have then been stored in the system control unit memory. During the operation of the engine, the control unit is constantly informed of the (engine) speed and load conditions and it is on this basis that it "selects" the optimum advance required, from its memory, for striking the spark at the spark plug for the cylinder in the explosion stroke.

In addition, the control unit corrects this value depending on further factors such as the engine coolant temperature, intake air temperature, detonation and butterfly valve position, to always ensure the optimum ignition point.

The information required by the control unit to operate the single coils is transmitted via electrical signals emitted by the following sensors:

a. **An rpm sensor** which produces an alternating single phase signal whose frequency indicates the engine speed.

b. **An air flow meter** which, on the basis of the quantity of air drawn in by the engine, transforms this valuer into an electrical signal, sending it to the electronic control unit.

c. **An air temperature sensor** which transforms the intake air temperature value into an electrical signal, sending it to the electronic control unit.

d. **Two detonation sensors** which, being located in the upper part of the cylinder block/crankcase with one between cylinders 1 and 2 and the other between cylinders 4 and 5, allow the control unit to recognize the cylinder with detonation (or the onset of detonation) and correct the ignition advance for the spark plug of the cylinder concerned only.

e. **A butterfly valve position sensor** which transforms the angular value of the actual butterfly into an electrical signal allowing the control unit to recognize the minimum, partial and full load conditions.

Functions of the system

In addition to electronically controlling the moment of ignition and the air flow rate during idling, in order to allow the engine to run smoothly when the environmental parameters and loads applied vary, the control unit has to control and manage the injection so that the stoichiometric ratio (air/fuel) is always within the optimum value.
The electronic control unit establishes the operating «time» for the injectors using a relatively simple rule which can be summed up as follows.

Taking the physical characteristics (viscosity and density) of the fuel and the difference in pressure between the pressure of the fuel and the pressure in the inlet ducts as constant, the quantity of fuel injected only depends on the «opening time» of the injector.
The functions carried out by the injection/ignition system are basically as follows:

- adjusting injection times;
- adjusting ignition advances;
- controlling cold starting;
- controlling the enrichment during acceleration;
- fuel cut-off during deceleration;
- controlling and managing the engine idle speed;
- limiting the maximum number of revs;
- controlling combustion through the Lambda sensor;
- fuel vapour recovery;
- controlling detonation;
- controlling the phase transformer
- connection with the climate control system (where fitted);
- self-adjustment of the system
- connection with the engine immobilizing device (Fiat CODE);
- autodiagnosis.

Copyright by Fiat Auto

SYSTEM MANAGEMENT STRATEGIES

Adjustment of the injection times

Digital technology has made it possible to achieve optimum consumption and performance through the use of programmes stored in the electronic control unit memory, which depend on the engine speed and load conditions.
The control unit controls the injectors rapidly and accurately, calculating the opening time on the basis of the engine load (number of revs and air flow rate), also taking into the battery voltage and the temperature of the engine coolant into account.
The injection is sequential and timed for each cylinder (the moment of injection is not simultaneous for all the cylinders) and takes place corresponding to the optimum injection point.

Adjusting ignition advances

Thanks to a map stored in its memory, the control unit is capable of calculating the advance according to the engine load (minimum, partial, full - on the basis of the number of revs and air flow rate), the temperature of the intake air and the temperature of the engine coolant.
It is possible to selectively delay the ignition at the desired cylinder, recognized by the combination of values recorded by the cam angle and detonation sensors.

Controlling cold starting

In these circumstances there is a natural weakening of the mixture as a result of the poor turbulence of the particles of fuel at low temperatures, reduced evaporation and condensation on the internal walls of the inlet manifold, all of which is exacerbated by the increased viscosity of the lubricant oil.

The electronic control unit recognizes this condition and corrects the injection time on the basis of the signals for the coolant temperature, intake air temperature, battery voltage and engine speed.

The ignition advance is only dependent on the number of revs and the engine coolant temperature.

During starting, the control unit carries out an initial simultaneous injection for all the injectors (full group injection) and after recognizing the reference on the flywheel, switches to the normal sequential, timed operation.

Whilst the engine is warming up, the electronic control unit operates the idle speed actuator which determines the quantity of air needed to ensure that the engine does not cut out.

The rotation speed is decreased proportionally as the temperature increases until the nominal value is reached with the engine warmed up.

Controlling the enrichment during acceleration

When there is an acceleration request, if the variation in the air flow meter signal exceeds a pre-set increase, the control unit does not only adjust the injection to the new requirements, but it increases it further to reach the required number of revs quickly.

When approaching the established number of revs, the injection increase is gradually eliminated.

NOTE *The acceleration request is also detected by the potentiometer on the butterfly; this makes it possible to ensure optimum running in the case of a failure of the air flow meter until a Service Centre can be reached.*

Fuel cut off during deceleration

The fuel cut off during deceleration is the modified type.

When the closed butterfly condition is recognized and the number of revs exceeds 1700 rpm (for engine speeds below 1700 rpm the cut off function is not operational in order to maintain optimum driveability), the injection of fuel is de-activated.

With no fuel supply, the number of revs starts to decrease more or less quickly depending on the vehicle driving conditions.

Before the idle speed is reached, the dynamics of the speed decrease are checked.

If they are above a certain value, the supply of fuel is partly re-activated on the basis of a special logic for the engine idle speed.

Having reached this condition, the normal idle functions are re-activated and the fuel cut off during deceleration will only be re-activated when the fuel cut off threshold is exceeded to prevent the irregular operation of the engine. The levels for restoring the fuel supply and for the fuel cut off vary according to the temperature of the engine.

There is another fuel cut off logic, in the controlunit, which intervenes during partial deceleration, in other words when a lesser engine load is required.

This function is only activated if the new condition lasts for a pre-set time and after the ignition advance angle has been adapted for the new situation.

Controlling and managing the engine idle speed

The adjustment of the idle speed is controlled in all operating conditions via the idle speed actuator which acts on the butterfly by-pass.

In addition to controlling the actual idle speed, it also carries out the functions of a supplementary air valve and regulator for engaging the various consumers (e.g. the climate control compressor); with the butterfly in the end of travel position, the actuator, in effect, regulates the by-pass port compensating for the power required by the consumers in order to guarantee an idle speed of 750 rpm.

The actuator for this version ensures a very responsive adjustment because the opening and the closing of the by-pass are both controlled by magnetic windings.

In addition to the actuator, the adjustment of the ignition angle (advance) is also responsible for correcting the idle because it has a more rapid effect.

NOTE *The self-adjustment function makes it possible to eliminate all adjustments of the idle speed recognizing the "butterfly in the end of travel" position from the butterfly casing sensor and thereby also correcting any possible wear which, in time, will become apparent through the closing of the butterfly.*

Limiting the maximum number of revs (protection outside of revs)

When the engine speed exceeds 6,800 rpm, the electronic control unit reduces the operating times for the injectors so that this value is not exceeded.

If the engine speed exceeds 7,013 rpm, then the control unit activates the fuel cut off strategy, restoring the operation of the injectors when the speed goes below 6,800 rpm.

Controlling combustion through the Lambda sensor

The Lambda sensor informs the control unit of the quantity of oxygen at the exhaust and consequent the correct air/fuel metering.

The optimum mixture is obtained with a Lambda coefficient of 1 (optimum stoichiometric mixture). The electrical signal which the sensor sends to the control unit undergoes a sharp variation preciesely when the composition of the mixture shifts from Lambda= 1. In conditions where the mixture is lean ($\lambda > 1$) the control unit increases the quantity of fuel, in conditions where the mixture is rich ($\lambda < 1$) it decreases it: in this way the engine operates as close as possible to the ideal Lambda value.

The Lambda sensor signal is processed, inside the control unit, by a special integrator which prevents sharp variations in the injection times for correcting the mixture strength.

The sensor is heated by an electrical resistance in order to reach the correct operating temperature rapidly (about 300 °C).

It is possible, through this sensor, to regulate the engine carburation with precision. This makes it possible, amongst other things, to ensure that the operation corresponds to the emission regulations.

Copyright by Fiat Auto

Fuel vapour recovery

The fuel vapours (pollutant according to the regulations) are sent to an active charcoal filter and from there to the engine where they are burnt; this takes place by means of a solenoid valve which is only operated by the control unit when the engine load conditions allow the correct combustion without the operation of the engine being "disturbed": in effect, the control unit compensates for this quantity of petrol by reducing the supply to the injectors.

Control of the detonation

This function has the task of detecting the presence of detonation (engine knock) by processing the signal coming from the appropriate sensor. The control unit constantly compares the signals coming from the sensors which a threshold value which is, in turn, constantly updated, in order to take into account the background noise and the ageing of the engine.

The control unit is therefore capable of identifying detonation (or the onset of detonation) and reduces the ignition advance (from 3° up to a maximum of 9.7°), until the phenomenon disappears. Subsequently, the advance is gradually restored to the basic value.

In acceleration conditions, a higher level is used, to take into account the increased noise of the engine in these circumstances. The detonation control strategy is also equipped with a self-adjustment function which memorizes the reductions in the advance which should be constantly repeated, to adapt the map to the different conditions in which the engine operates.

Controlling the phase transformer

The control unit controls the phase transformer solenoid valve according to the value of the engine load. At coolant temperatures in excess of 40 °C and when the engine speed is above idling and below 4,800 rpm with a butterfly angle greater than around 8°, the control unit sends a signal to the solenoid valve which, when activated, allows the transformer to decrease the timing diagram for the inlet stroke by 18°.

When the engine speed is equivalent to idling or exceeds 4,800 rpm, the control unit de-activates the solenoid valve and the transformer returns the inlet timing to the previous basic values.

Obviously, the control of the phase transformer operates with a hysteris ranges, i.e. the solenoid valve activation threshold is always higher than the de-activation level; this is designed to avoid balance conditions and consequently too rapid a succession of shifts from one timing diagram to another with obvious operating problems.

Connection with the climate control system

When the climate control is switched on, the compressor absorbs power from the engine which, when idling, will tend to cut out. In order to prevent this problem, the control unit adjusts the air flow rate to the new power requirements, operating the appropriate actuator (the adjustment also takes place in usage conditions to maintain optimum driveability). Another function of this system is that of momentarily interrupting the supply to the compressor if there is a high power request by the engine (strong acceleration).

Self-adjustment of the system

The control unit is equipped with a self-adjustment function which has the task of recognizing the changes which take place in the engine due to bedding in over a period of time and the ageing of both the components and the engine itself.

These changes are memorized in the form of modifications to the basic map and are designed to adjust the operation of the system to the gradual alterations of the engine and the components compared with when they were new.

This adjustment function also makes it possible to compensate for the inevitable differences (due to production tolerances) with components which may have been replaced. This gives all vehicles the opportunity for maximum results without special regulation and control operations.

The self-adjustment parameters are lost if the control unit is disconnected.

Connection with engine immobilizer device (Fiat CODE)

In order to improve protection against theft attempts, the vehicle has been fitted with an engine immobilizer system (Fiat CODE) which only allows the injection/ignition control unit to be activated by means of an electronic code.

Each time the key is turned to the OFF position, the Fiat CODE system completely de-activates the injection/ignition control unit.

When the key is turned from OFF to ON, the following operations take place in the order given:

1. The injection/ignition control unit sends the Fiat CODE control unit a request for the secret code in order to de-activate the immobilizing of the functions.
2. The Fiat CODE control unit responds by only sending the secret code after it has, in turn, received the recognition code, transmitted by the ignition key, which contains a special transponder.
3. The recognition of the secret code allows the de-activation of the functions lock and the injection/ignition control unit can activate the normal system management programme.

A special two way serial line allows the exchange of data between the injection/ignition control unit and the Fiat CODE control unit.

If there is a failure of the Fiat CODE system it is still possible to start up the vehicle using the special emergency procedure.

NOTE *Given the presence of the Fiat CODE system* ***DO NOT CARRY OUT*** *during the fault diagnosis and/or operating checks, any tests using another injection/ignition control unit. In such a case, the Fiat CODE control unit would transfer the (unrecognized) recognition code to the test control unit, which would render it unfit for use on any other vehicles.*

Autodiagnosis

The Motronic M 2.10.4 injection/ignition system is also equipped with an "**autodiagnosic**" function which memorizes any faults at the sensors and actuators, making it easier to detect and correct them. Any fault is signalled by the appropriate failure warning light in the instrument panel.

Copyright by Fiat Auto

10.

DIAGRAM SHOWING INFORMATION ENTERING/LEAVING THE INJECTION/IGNITION SYSTEM CONTROL UNIT AND SENSORS/ACTUATORS

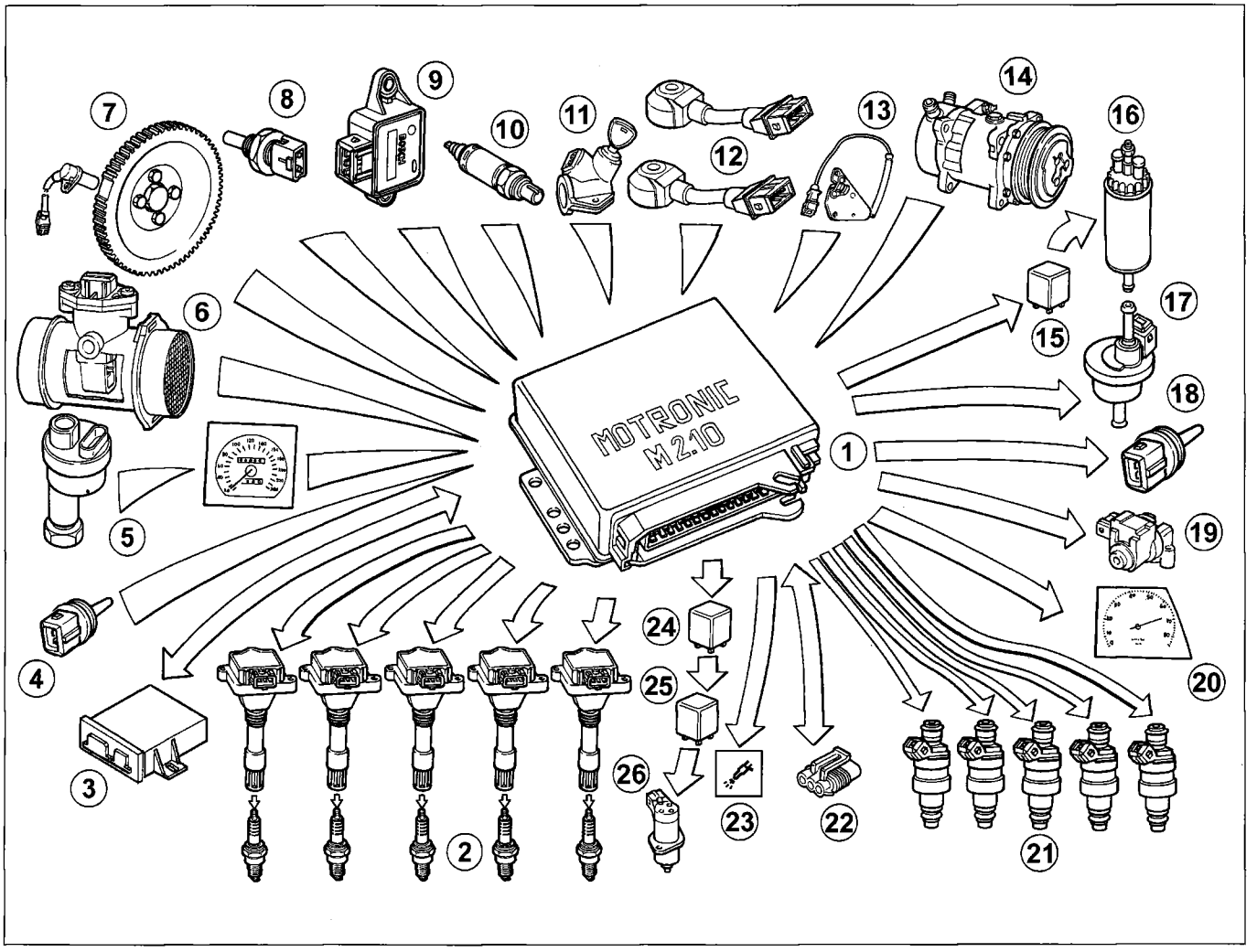

P4F08DJ01

Components key

1. Electronic control unit
2. Coils and spark plugs
3. Fiat CODE control unit
4. Three stage pressure switch
5. Speedometer sensor
6. Flow meter
7. Rpm sensor
8. Coolant temperature sensor
9. Butterfly potentiometer
10. Lambda sensor
11. Ignition switch
12. Detonation sensors
13. Timing sensor
14. Climate control system signal
15. Electric fuel pump relay and Lambda sensor
16. Electric fuel pump
17. Petrol vapour inlet solenoid valve
18. Intake air temperature sensor
19. Engine idle speed actuator
20. Rev counter signal
21. Injectors
22. Diagnostic socket
23. I.E. system failure warning light
24. I.E. system relay
25. Relay for phase transformer
26. Phase transformer solenoid valve

DIAGRAM SHOWING FUEL SUPPLY CIRCUIT

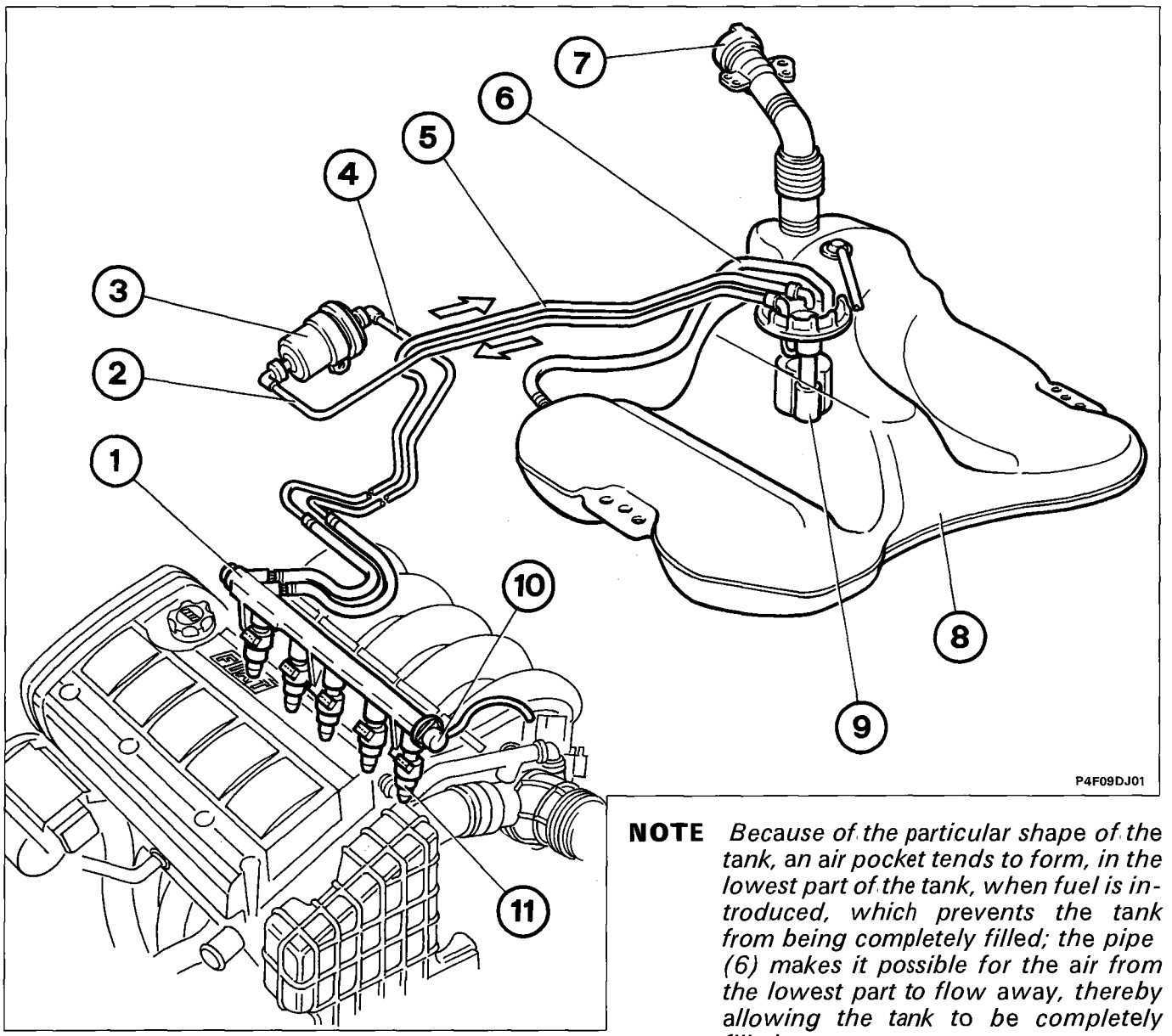

NOTE *Because of the particular shape of the tank, an air pocket tends to form, in the lowest part of the tank, when fuel is introduced, which prevents the tank from being completely filled; the pipe (6) makes it possible for the air from the lowest part to flow away, thereby allowing the tank to be completely filled.*

1. Fuel supply manifold
2. Supply pipe from tank to filter
3. Filter
4. Supply pipe from filter to injectors
5. Return pipe
6. Breather pipe
7. Filler with ventilation and safety valve
8. Tank
9. Electric pump
10. Pressure regulator
11. Injectors

The supply of fuel is obtained by means of an electric pump immersed in the tank which draws in the fuel and sends it to the filter and then to the injectors.

The fuel supply pressure to the injectors is kept constant and proportional to the pressure value in the inlet manifold by the pressure regulator which acts on the fuel flow rate so that the rise in pressure at the injectors is kept constant.

The excess fuel flows from the pressure regulator, not under pressure, to the tank.

Copyright by Fiat Auto

DIAGRAM SHOWING AIR INTAKE CIRCUIT

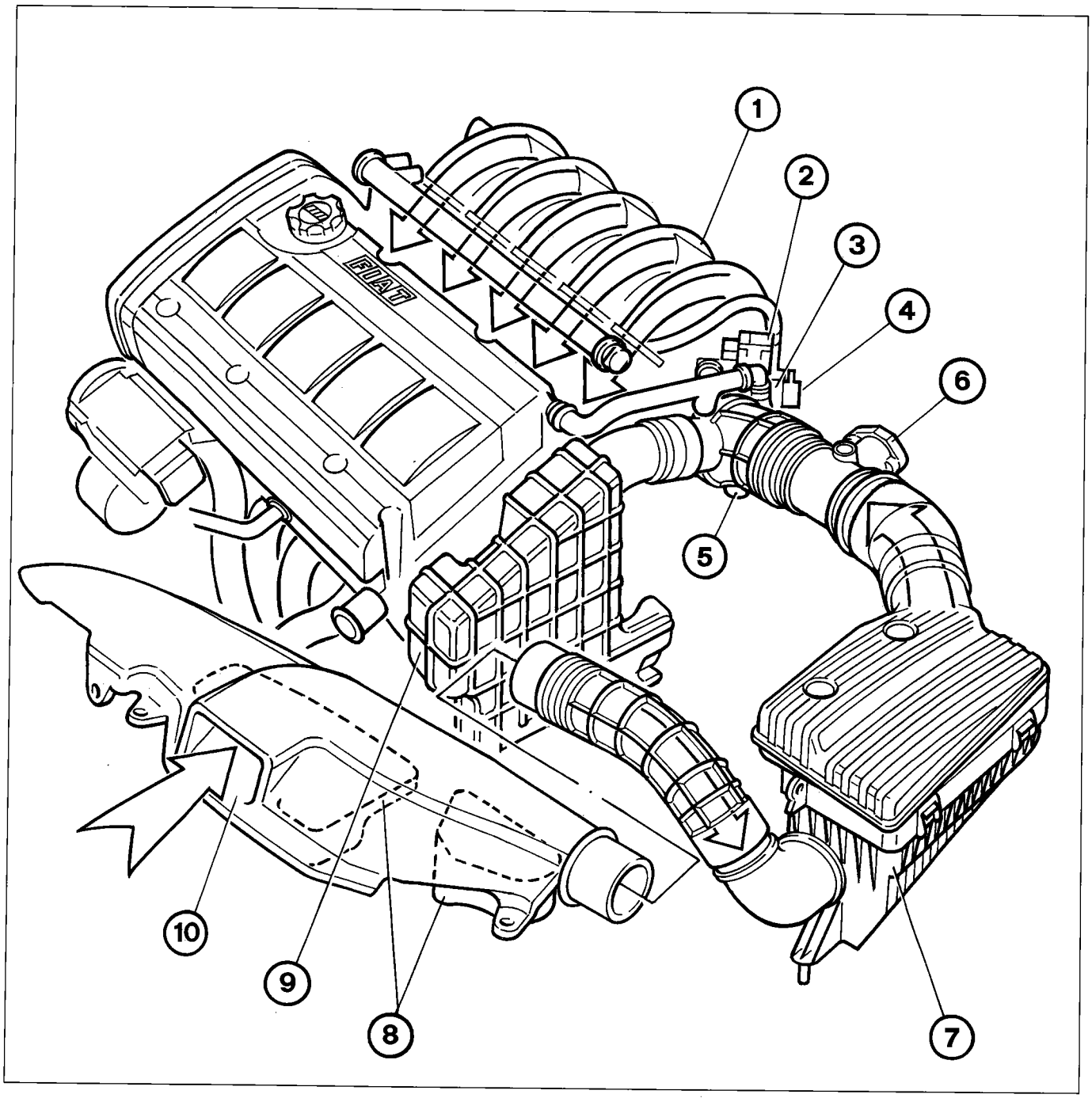

P4F10DJ01

1. Inlet manifold
2. Engine idle speed actuator
3. Butterfly casing
4. Butterfly valve positive sensor
5. Air temperature sensor
6. Flow meter
7. Air filter
8. Lower resonator
9. Upper resonator
10. Inlet vent

DIAGRAM SHOWING FUEL ANTI-EVAPORATION CIRCUIT

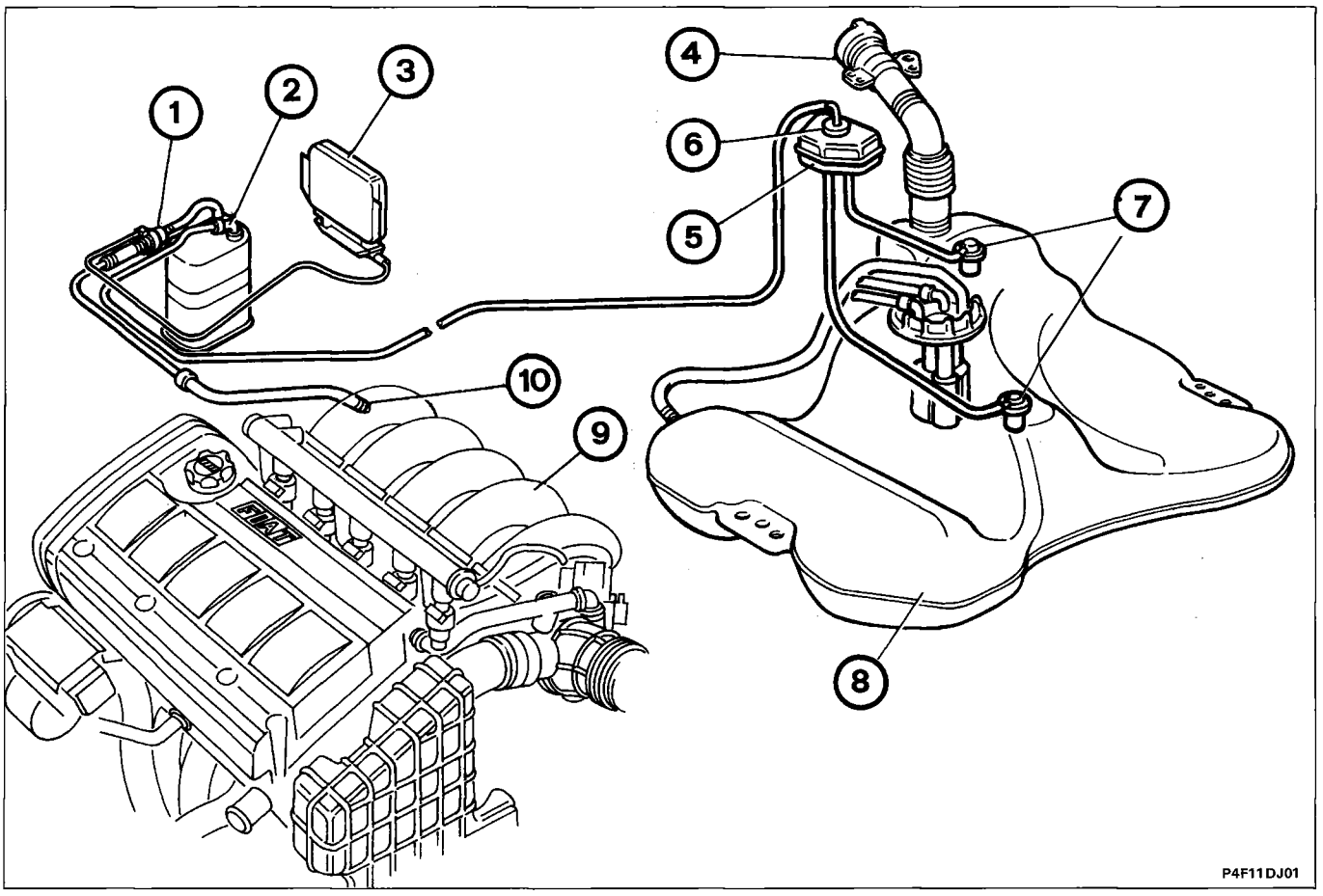

1. Fuel vapour cut out solenoid valve
2. Charcoal filter
3. Injection/ignition control unit
4. Safety and ventilation valve
5. Fuel vapour separator
6. Multi-purpose valve
7. Float valves
8. Tank
9. Inlet manifold
10. Fuel vapour inlet

The anti-evaporation system is designed to prevent the fuel vapours, made up of the lightest particles of hydrocarbons which basically form in the tank, from being discharged into the atmosphere.
The system operates, above all, at high outside temperatures when the temperature of the fuel increases and consequently the tendency to evaporation also increases; in this situation there is an increase in the pressure inside the tank (8).
In particular, with the tank (8) full and the vehicle stationary, the two float valves (7) remain open, as they are positioned higher than the breather pipe, and therefore all the vapours to reach the separator (5) where they condense and mainly remain in the tank (8).
On the other hand, in the case of a great deal of splashing during driving or the vehicle overturning, the valves (7) close, preventing the escape of fuel.
If the pressure inside the tank reaches 30-40 mbar, the multi-purpose valve (6) opens and the fuel vapours reach the charcoal filter (2). The valve (6) also allows an intake of air into the tank through the charcoal filter if it has been necessary following the decrease in the level of the fuel and the consequent vacuum which is created inside the tank.
When the engine is running, the control unit (3) operates the charcoal filter solenoid valve (1) which allows the intake of vapours by the engine and the consequent scavenging of the charcoal filter.
If as the result of a malfunction of a certain component, the pressure inside the tank increases dangerously, the safety valve located in the cap (4) allows the pressure to be discharged outwards. If necessary, this valve can open in the opposite direction, to ventilate the tank and prevent the vacuum from reaching excessive values.

Copyright by Fiat Auto

10.

SYSTEM FOR RECIRCULATING GASES COMING FROM THE ENGINE CRANKCASE

The system controls the emissions, from the engine cranckcase, of breather gases made up of air/petrol mixtures and the burnt gases which escape from the piston seals, as well as the lubricant oil vapours, recirculating them to the inlet.
The breather gases, directed by the special partitions, rise by the engine oil filler, then pass through the coils (7), under the tappet cover, where they lose part of the oil which they contain which returns to the camshafts through the pipe (6), in the form of droplets.
The pipe (6) is a suitable shape to prevent the breather gases escaping and to only allow the recirculation of the droplets of oil.
The remaining gases come out of the intake (5) which contains a spark-out (4) (to prevent combustion due to flame returns from the butterfly casing.
From the intake (5) the breather gases reach the T connector (3).
With the butterfly open, the gases flow through the inlets (1) and (2) and are drawn into the manifold.
With the butterfly closed, the vacuum in the inlet manifold draws in the gases through the inlet (1) which contains a PCV valve (8) (Positive Crank Ventilation) which shuttersthe inlet.
The PCV valve can, in effect, be modulated and the quantity of gases which pass through is proportional to the vacuum in the inlet manifold.
When the butterfly valve is completely open (condition A), the vacuum inside the inlet manifold is minimal , the spring (10) is completely extended and the PCV valve allows the maximum flow of breather gases.
Viceversa, with the butterfly completely closed (condition B), the vacuum inside the manifold is maximum, which causes the movement of the piston (9) which shutters the flow of breather gases inside the PCV valve thereby restricting the intake into the manifold of the actual gases.

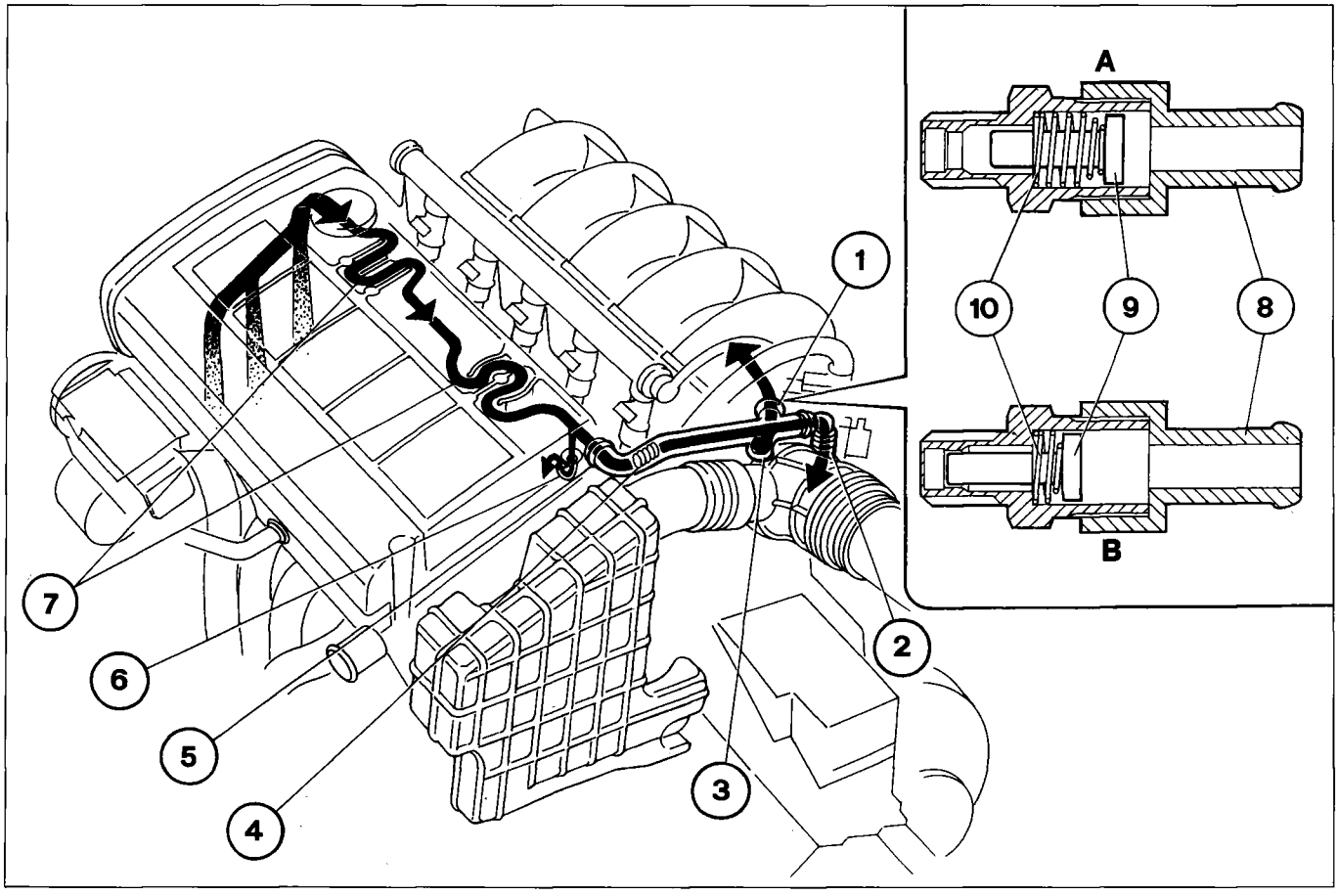

ENGINE EXHAUST ASSEMBLY DIAGRAM

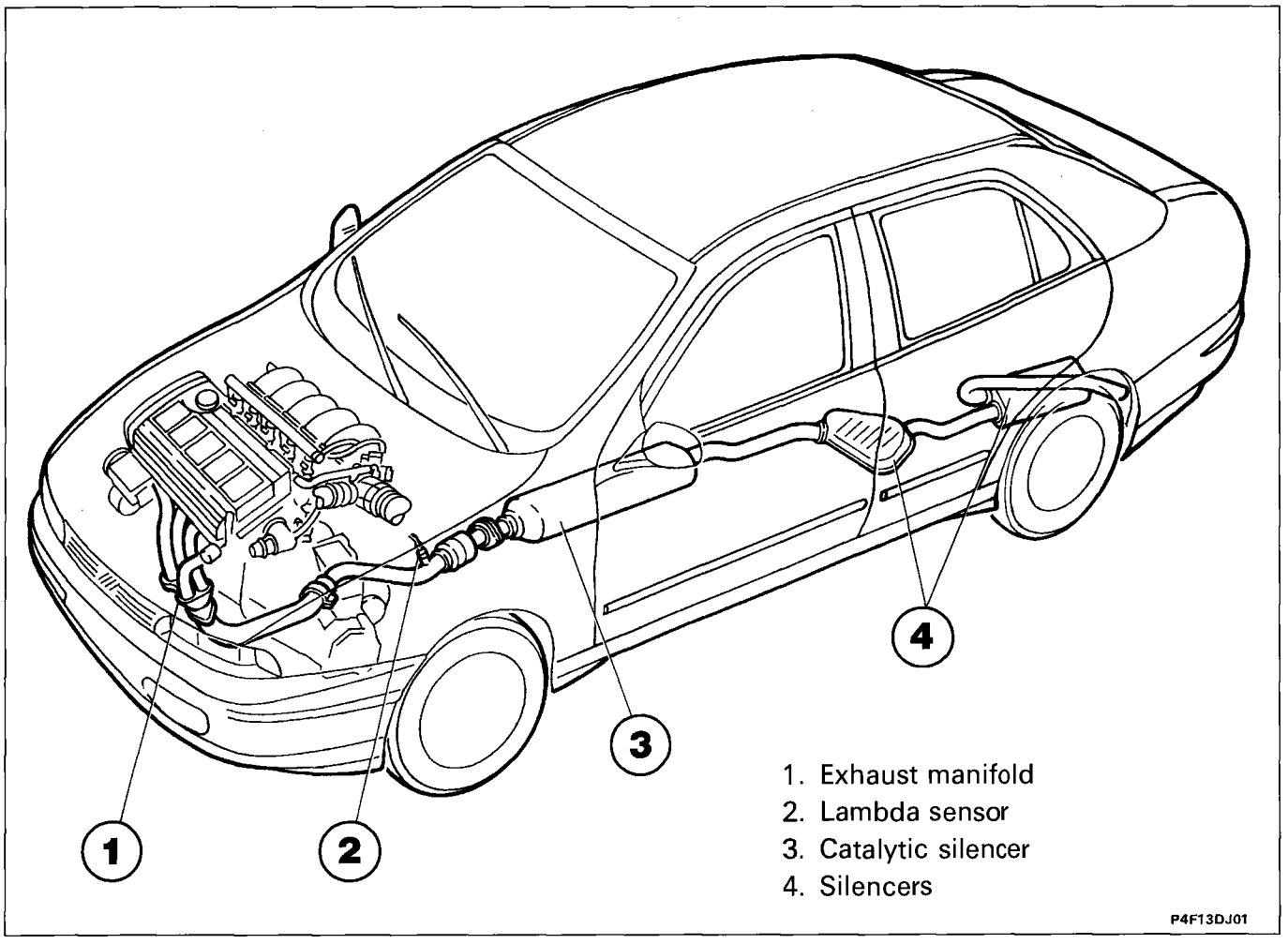

The control of the mixture strength, which is the closed loop type, is activated by the Lambda sensor which detects the oxygen content in the exhaust gases, upstream of the catalytic silencer.
The Lambda sensor measurements allowthe electronic control unit to constantly correct the quantity of petrol injected keeping the air/fuel ratio constant.
In this way the harmful exhaust emissions are controlled and the three way catalytic converter (catalytic silencer) completes this task.
The efficient operation of the catalytic silencer and consequently containing the toxic exhaust gases depends on the air/fuel ratio with which the engine is supplied.
The three way type catalytic converter makes it possible to simultaneously keep down the levels of the three pollutant gases present in the exhaust gases: unburnt hydrocarbons (HC), carbon monoxide (CO), nitrous oxides (NOx).
Two types of chemical reaction take place inside the converter:
- oxidation of the CO and the HC, converted into carbon dioxide (CO_2) and water (H_2O)
- reduction of the NOx, converted into Nitrogen (N_2).

The following will put the catalytic converter rapidly out of action and render it irreparable:
the presence of lead in the petrol, which lowers the degree of conversion to such levels as to make its presence in the system superfluous;
the presence of unburnt petrol in the converter: in effect, a flow of petrol for 30 seconds in an ambient of 800° (the temperature inside the silencer) is sufficient to cause the catalyzer to melt and break.
It is absolutely vital for the ignition system to be working perfectly, therefore, the spark plug leads should not be disconnected with the engine running, for any reason, and, in the case of tests, the catalytic converter should be replaced with an equivalent section of pipe.

Copyright by Fiat Auto

INJECTION/IGNITION SYSTEM WIRING DIAGRAM

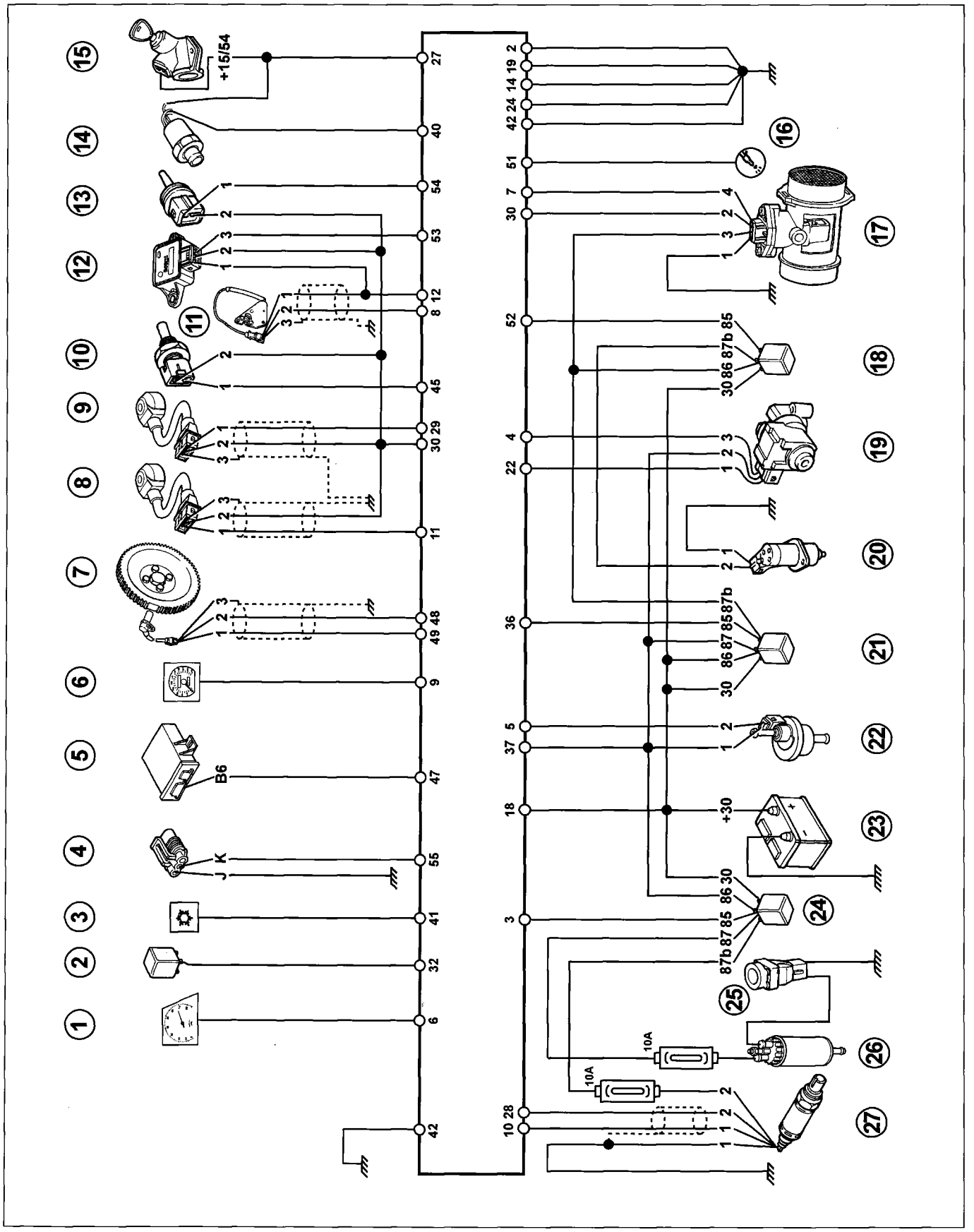

P4F14DJ01

Connection between control unit/ignition coils and injectors

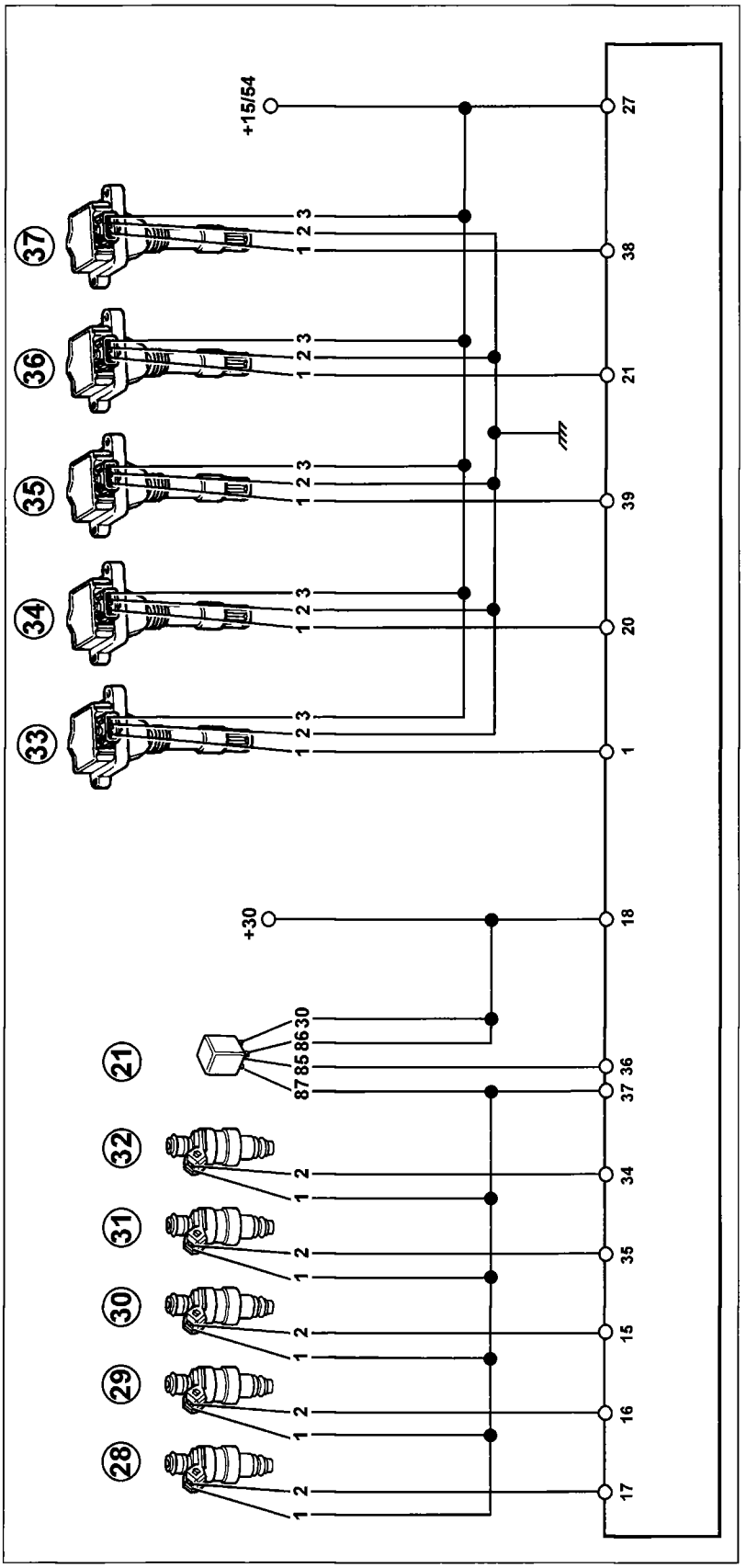

P4F15DJ01

Key:

1. Rev counter signal
2. Climate control relay
3. Climate control on button
4. Fiat/Lancia Tester diagnostic socket
5. Fiat CODE control unit
6. Speedometer signal
7. Rpm and TDC sensor
8. Detonation sensor 1
9. Detonation sensor 2
10. Water temperature sensor
11. Timing sensor
12. Butterfly valve position sensor
13. Intake air temperature sensor
14. Three stage pressure switch
15. Ignition switch
16. Injection/ignition system failure warning light
17. Flow meter
18. Phase transformer solenoid valve relay
19. Engine idle speed actuator
20. Phase transformer solenoid valve
21. Injection/ignition system relay feed
22. Fuel vapour solenoid valve
23. Battery
24. Electric fuel pump relay and Lambda sensor
25. Inertia switch
26. Electric fuel pump
27. Lambda sensor
28. Injector for cylinder N°1
29. Injector for cylinder N°2
30. Injector for cylinder N°3
31. Injector for cylinder N°4
32. Injector for cylinder N°5
33. Ignition coil for cylinder N°1
34. Ignition coil for cylinder N°2
35. Ignition coil for cylinder N°3
36. Ignition coil for cylinder N°4
37. Ignition coil for cylinder N°5

Copyright by Fiat Auto

LOCATION OF INJECTION/IGNITION SYSTEM COMPONENTS

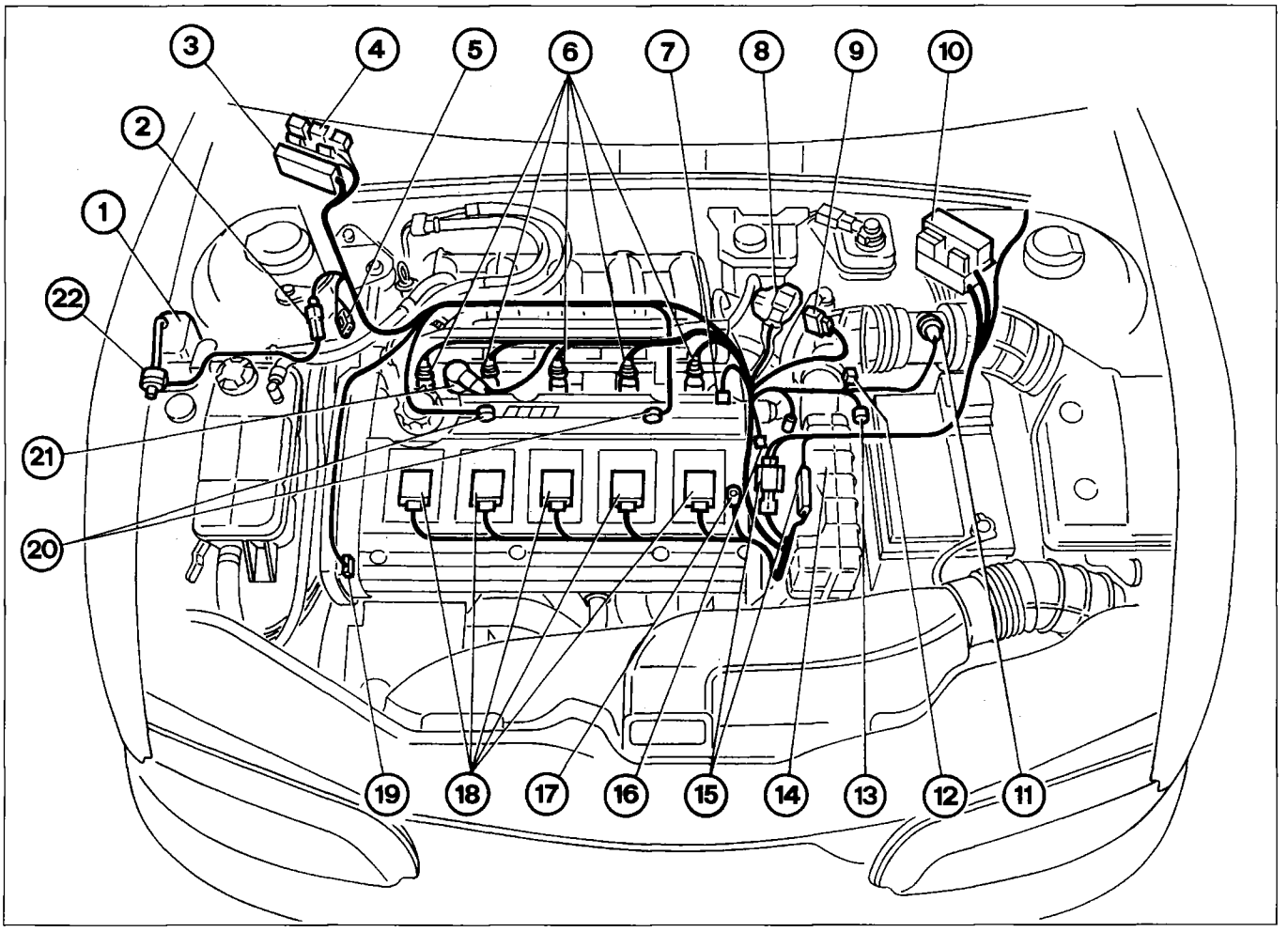

P4F16DJ01

Key

1. Charcoal filter
2. Connector for fuel vapour solenoid valve
3. Injection/ignition control unit
4. Fuses and relays
5. Diagnostic socket
6. Injectors
7. Rpm sensor
8. Engine idle speed actuator
9. Butterfly valve position sensor
10. General system protective fuse
11. Flow meter
12. Air temperature sensor
13. Vehicle speed sensor
14. Lambda sensor
15. Join between front cable and injection cable
16. Coolant temperature sensor
17. Earth connection
18. Ignition coils
19. Timing sensor
20. Detonation sensor
21. Phase transformer solenoid valve
22. Fuel vapour solenoid valve

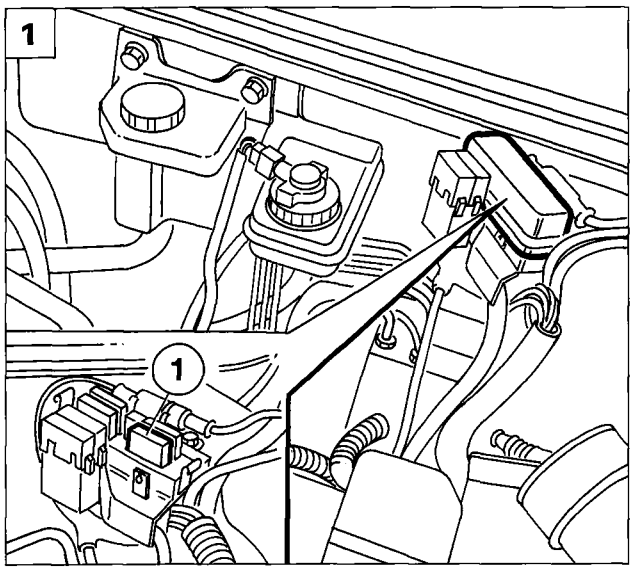

P4F23CJ01

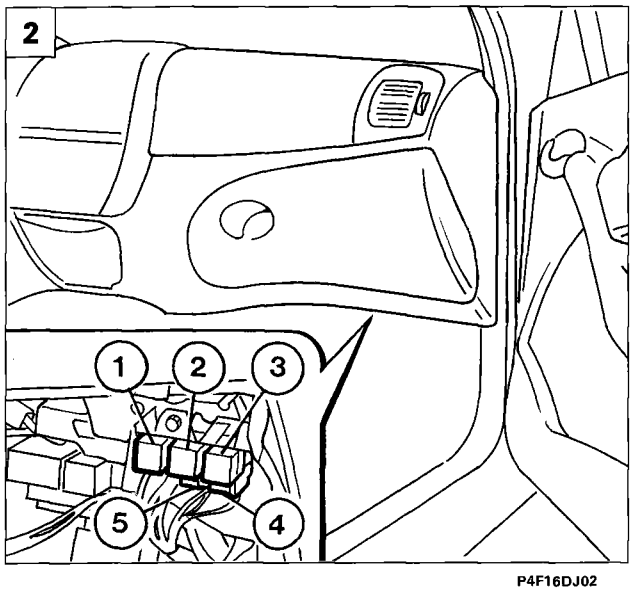

P4F16DJ02

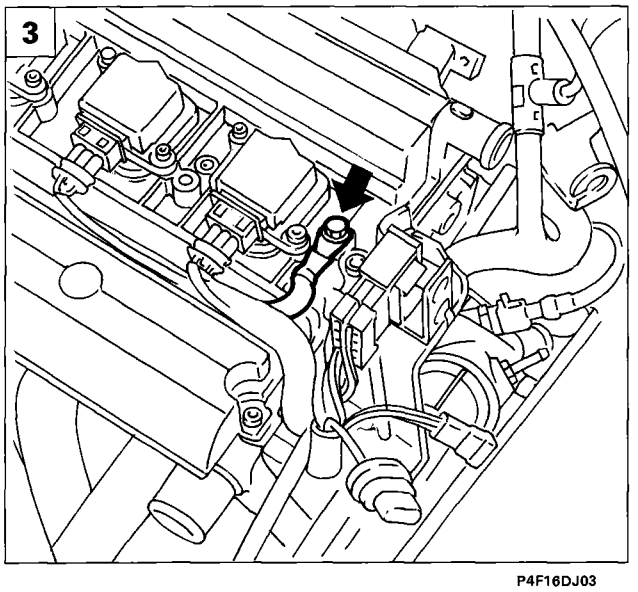

P4F16DJ03

FUSES, RELAYS AND EARTH POINTS

1. General protective fuse

The general protective fuse (EFI-30A) for the injection/ignition system (1) is housed inside a container; to gain access, remove the cover releasing it from the side clips.

2. Fuses and relays

These are located under the glove compartment, in front of the electronic control unit.

1. Phase transformer solenoid valve relay
2. Injection system relay
3. Electric fuel pump relay
4. Fuse (10A) for Lambda sensor
5. Fuse (10A) for electric fuel pump

3-4 Earth points

In order to increase electro-magnetic compatibility and operational reliability, special care has been taken over the number and location of the earth points as follows:

3. secondary coils connected under the cylinder head cover;
4. control unit earth (pin 2, 14, 19, 24, 42), heater Lambda sensor, flow meter and timing variator solenoid valve connected to the inlet manifold mounting bracket.

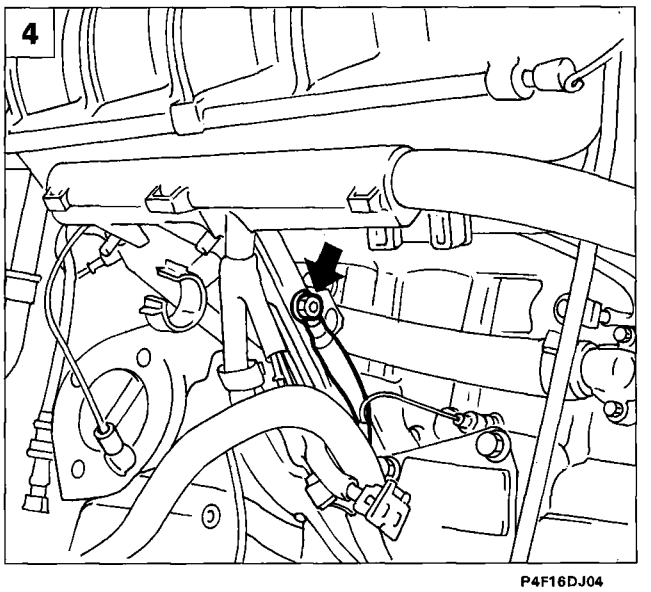

P4F16DJ04

INJECTION/IGNITION SYSTEM COMPONENTS

The injection/ignition system is basically made up of a set of wiring, an electronic control unit and the following sensors/actuators:

Sensors

- Speedometer sensor
- Rpm and T.D.C. sensor
- Detonation sensors
- Coolant temperature sensor
- Timing sensor
- Butterfly valve position sensor
- Intake air temperature sensor
- Intake air flow rate sensor (flow meter)
- Lambda sensor

Actuators

- Engine idle speed actuator
- Phase transformer solenoid valve
- Fuel vapour cut out solenoid valve
- Electric fuel pump
- Injectors
- Ignition coils
- Spark plugs

INJECTION/IGNITION SYSTEM WIRING

The connection between the various system components is achieved through one set of wiring fitted with various type connectors grouped together in special ducts fitted on the engine (pre-wiring).

INJECTION/IGNITION ELECTRONIC CONTROL UNIT

It is made up of thick film hybrid circuits and is connected to the electrical wiring by means of a **55 way** (or pole) multiple connector.

It receives all the data concerning the engine operating conditions transmitted by the various sensors.

Using this data and with the aid of typical programmes indelibly written in its memory, the control unit is able to achieve the following objectives:

1. Managing the injection time and frequency; in other words, providing the quantity of fuel calculated for each cylinder with a sequential, timed type operation (1-2-4-5-3).
   In practice, the air/fuel ratio should always stay within the optimum value, defined during setting up, in order to limit fuel consumption, reduce harmful exhaust gas emissions and ensure the optimum thermo-dynamic efficiency of the engine.
2. Electronically controlling the moment of ignition (ignition advance)
3. Controlling the air flow rate at the rotation speed via the specific sensor in order to allow the smooth operation of the engine as the environmental parameters and loads applied vary.
4. Identifying, through special programmes, any possible operating defects for the various sensors recorded in the RAM and replacing the incorrect or not received data with replacement values to ensure the operation of the engine even in emergency conditions (RECOVERY).
5. Providing the Fiat/Lancia Tester, if connected, with the data concerning the operating defects identified and memorized, via the serial line (diagnostic socket).

IDENTIFICATION OF CONNECTIONS AT THE CONTROL UNIT (PIN-OUT)

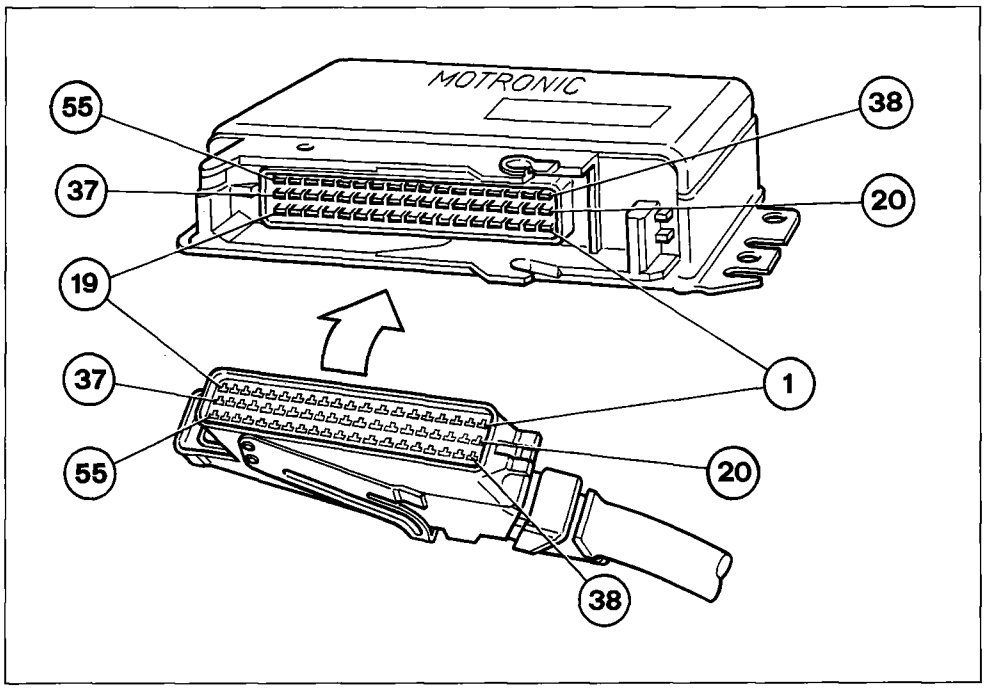

P4F19DJ01

1. Ignition coil for cylinder N°1
2. Engine earth
3. Electric fuel pump relay feed and Lambda sensor
4. Engine idle speed actuator
5. Fuel vapour solenoid valve
6. Rev counter signal
7. Intake air flow meter
8. Timing sensor
9. Speedometer sensor
10. Lambda sensor
11. Detonation sensor
12. Timing sensor
13. Not connected
14. Engine earth
15. Injector for cylinder N°3
16. Injector for cylinder N°2
17. Injector for cylinder N°1
18. Supply (+30)
19. Engine earth
20. Ignition coil for cylinder N°2
21. Ignition coil for cylinder N°4
22. Engine idle speed actuator
23. Not connected
24. Engine earth
25. Not connected
26. Not connected
27. Supply (+15/54)
28. Lambda sensor
29. Detonation sensor
30. Supply for various sensors
31. Not connected
32. Climate control activation go ahead relay
33. Not connected
34. Injector for cylinder N°5
35. Injector for cylinder N°4
36. I.E. system relay
37. Supply (+30)
38. Ignition coil for cylinder N°5
39. Ignition coil for cylinder N°3
40. Three stage pressure switch
41. Not connected
42. Engine earth
43. Not connected
44. Not connected
45. Coolant temperature sensor
46. Not connected
47. Fiat CODE control unit
48. Rpm and TDC sensor
49. Rpm and TDC sensor
50. Not connected
51. I.E. system failure warning light
52. Phase transformer solenoid valve relay
53. Butterfly valve position sensor
54. Intake air temperature sensor
55. Diagnostic socket for Fiat/Lancia Tester

Copyright by Fiat Auto

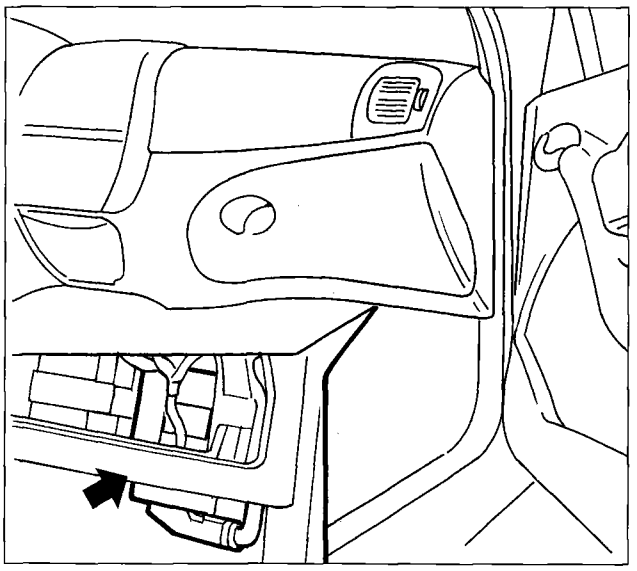

P4F20DJ01

REMOVING-REFITTING ELECTRONIC CONTROL UNIT

The electronic control unit is located under the glove compartment (right side). To remove the control unit, proceed as follows:

- Undo the bolts fixing the control unit to the mounting bracket.
- To remove the multiple connector, release the clip lowering it and then move it towards the right hand side.

There may be voltage at the terminals which are not connected, therefore no connection should be made or else there is the risk of short circuiting with damage to the control unit.

The operations of fitting and removing the multiple connector should be carried out with the ignition switched off.

IGNITION COILS (0 221 504 006)

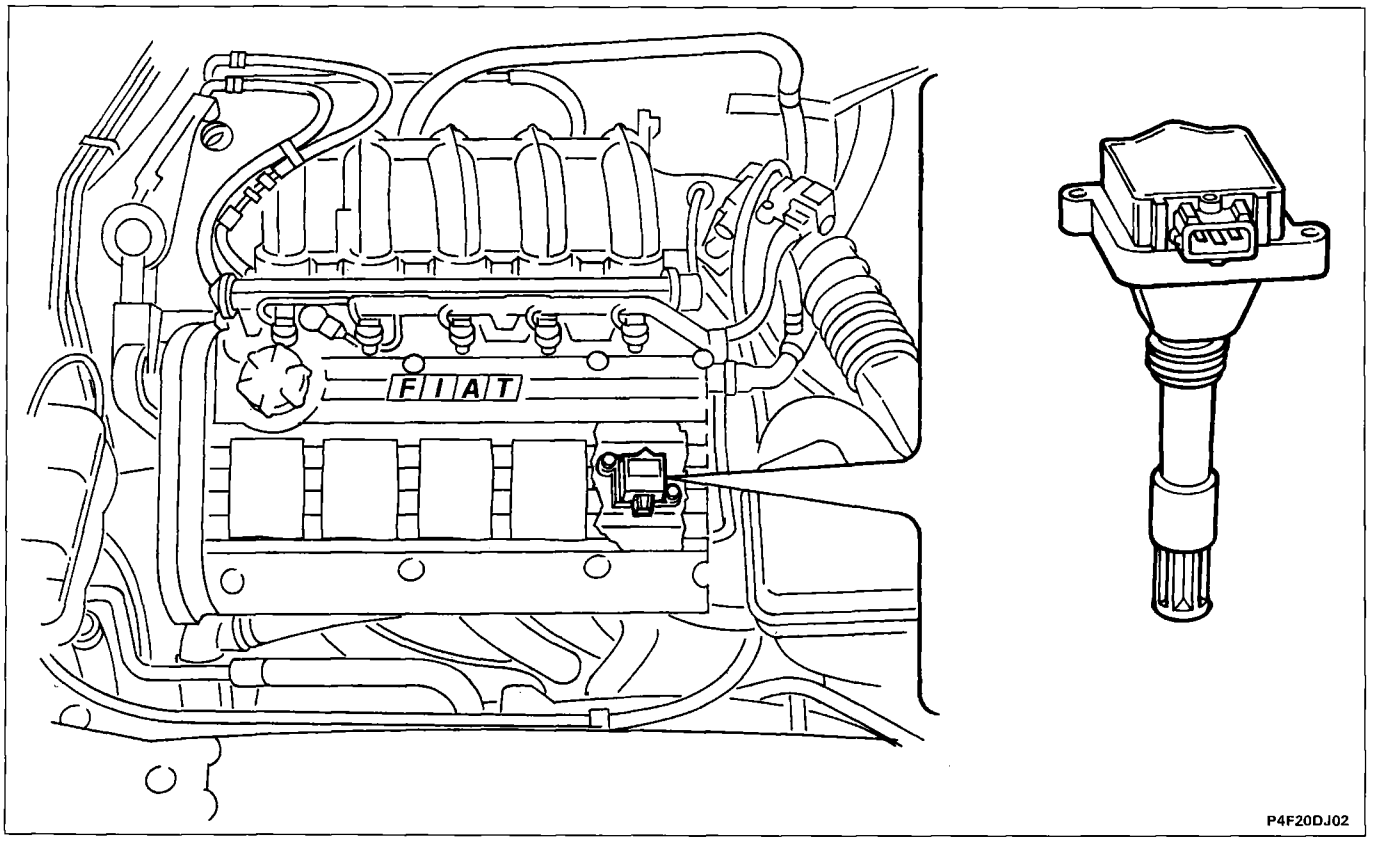

P4F20DJ02

The static advance electronic ignition has been improved with a single coil for each spark plug; in addition, the power modules are housed inside the control unit; in practical terms this solution dispsenses with the H.T. circuit, improving reliability and safety still further and reducing the risk of interference dur to high tension leads and connections.
A normal coil is involved which increaess the voltage of the impulse sent to the spark plugs: each individual coil, located in the cylinder head, directly supplies one spark plug without intermediate H.T. leads.

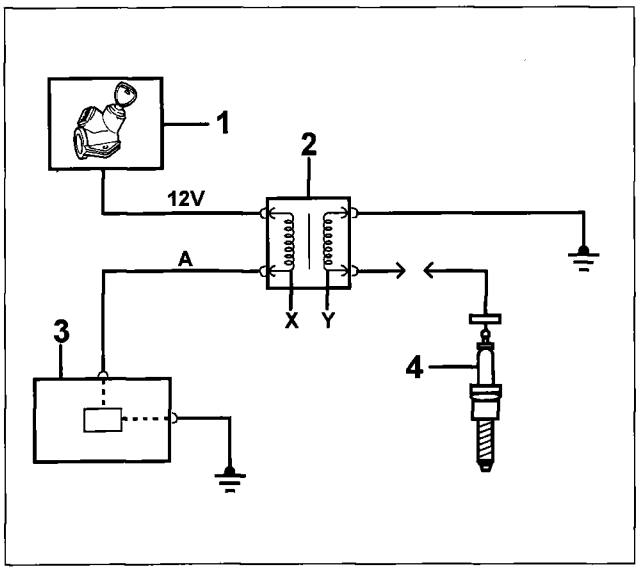

P4F21DJ01

Electrical features

Primary winding inductance ..... 3 mH
Primary winding resistance ..... 0,4 Ω
Interference resistance ..... 1 KΩ

Electrical connections diagram

A. Control signal
X. Primary winding
Y. Secondary winding
1. Supply via the ignition switch
2. Single coil
3. Electronic control unit
4. Spark plug

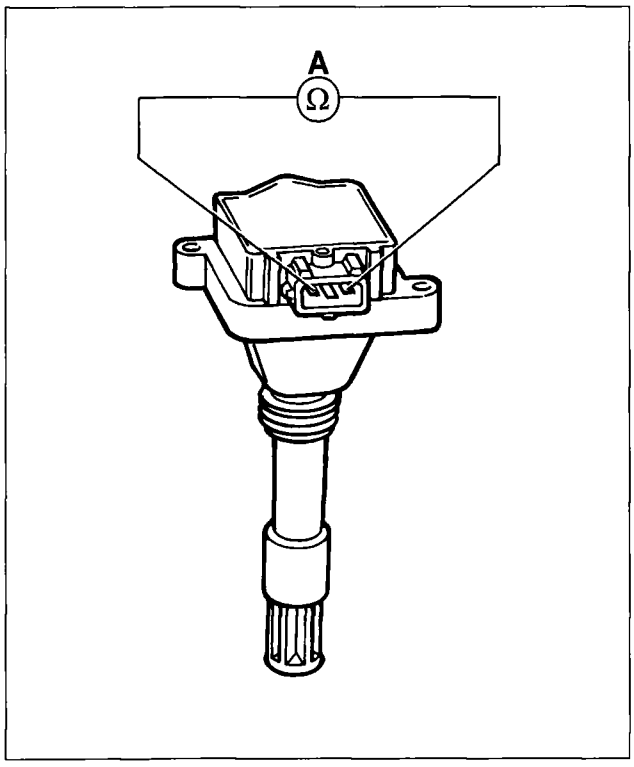

P4F21DJ02

Checking coil primary circuit resistance

The resistance is checked by connecting an ohmmeter to the outer pins of the connector, as shown in the diagram.

Primary resistance: 0.4 ohm

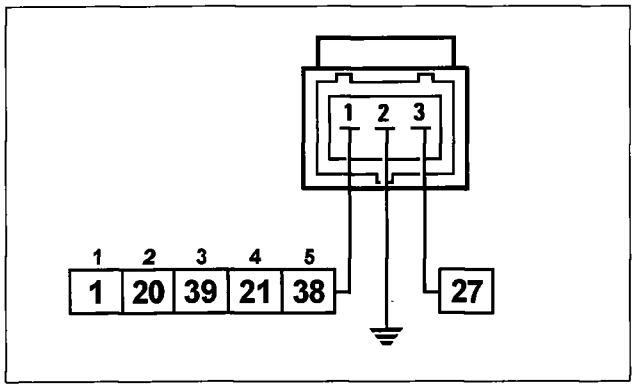

P4F21DJ03

Wiring connector

The numbers indicate the corresponding control unit pins arranged in the order of the number of cylinders.

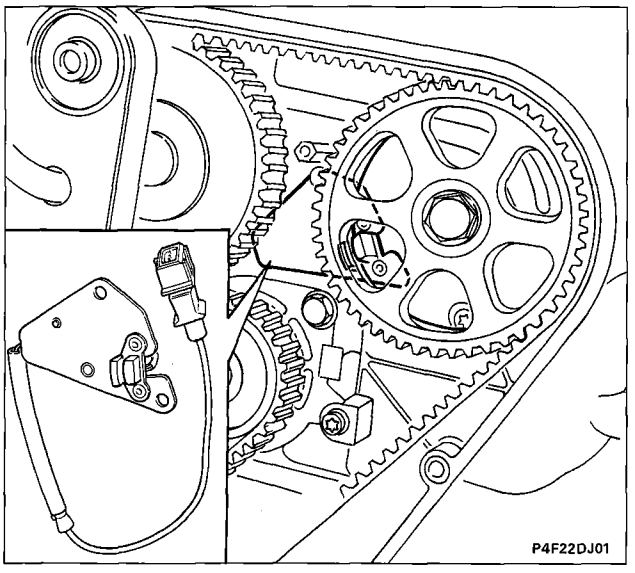

TIMING SENSOR (0.232.101.026)

The Bosch Motronic M 2.10.4 system adopts a sequential, timed injection system, in other words the injection of the fuel takes place in order for each cylinder during the inlet stroke. In order to achieve this, in addition to the rpm and TDC signal, the electronic control unit also uses a timing signal to determine the injection point.
The signal sent to the control unit is produced by a Hall effect sensor fitted by the exhaust side camshaft drive pulley.

Operating principle

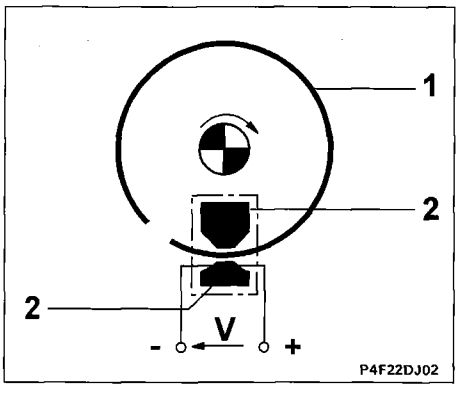

1. Deflector (pulley seal)
2. Magnetic material

A semi-conductor layer with a current passing through it, immersed in a normal magnetic field normale (lines of force perpendicular to the direction of the current) produces a difference in power, known as "HALL" voltage.
If the intensity of the current remains constant, then the voltage produced only depends on the intensity of the magnetic field; if the magnetic field simply varies periodically this is sufficient to produce a modulated electric signal whose frequency is proportional to the speed at which themagnetic field changes.
To achieve this change, a metal ring (inner part of the pulley) fitted with an opening, passes through the sensor. As it moves, the metal part of the ring covers the sensor, locking the magnetic field with a consequently low output signal; viceversa, corresponding to the opening and in the presence of the magnetic field, the sensor produces a high signal.

As a result, the high signal alternates with the low signal once every two revolutins of the engine and namely when cylinder N°1 is 78° before TDC.
This signal, together with the rpm and TDC signal, allows the control unit to recognize the cylinders and determine the point of injection. At each revolution of the engine the control unit checks that the timing signal is present; if this signal is missing for two consecutive revolutions, then the control unit signals this failure (warning light in the panel comes on) and the engine cannot be started up.

Wiring connector

The numbers indicate the corresponding control unit pins

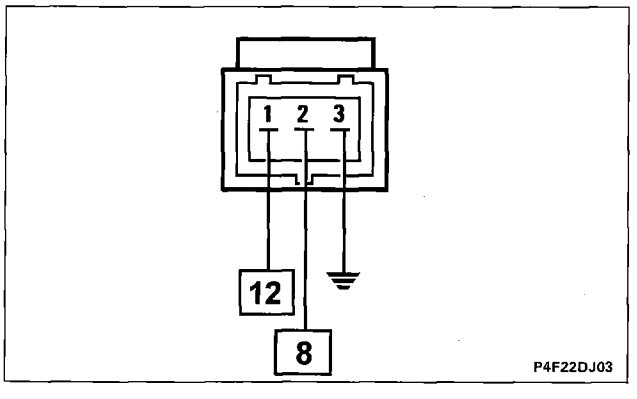

Removing-refitting

This operation involves removing the toothed belt from the valve gear and from the exhaust side camshaft toothed pulley.
Having carried out these operations, it is necessary to:
- disconnect the electrical connector;
- undo the fixing bolts and remove the sensor.

When refitting, reverse the procedure, following the fitting instructions and tensioning the toothed belt.

NOTE *The sensor does not require any sort of adjustment.*

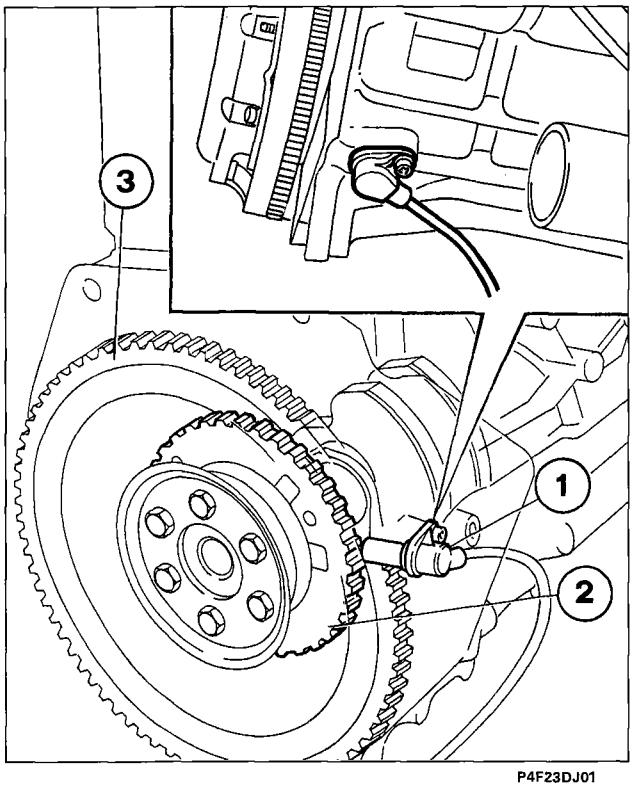

P4F23DJ01

1. Rpm sensor
2. Toothed pulley
3. Engine flywheel

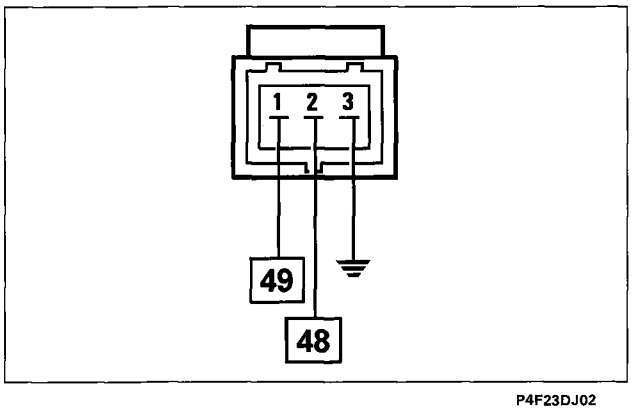

P4F23DJ02

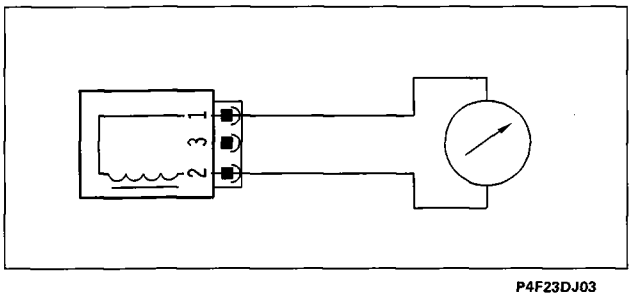

P4F23DJ03

RPM AND TDC SENSOR (0.281.002.102)

The sensor, which is designed to detect the number of revs and the TDC, is the inductive type, i.e. it operates by varying the magnetic field produced by the passing of the teeth on a flywheel which is positioned inside the crankcase and fixed to the rear counter-weight of the crankshaft. In this way the sensor is fixed to the crankcase and the checks and adjustments to the gap and the angular position are no longer required.

The teeth which pass in front of the sensor, alter the gap between the pulley and the sensor; the dispersed flux, which varies as a consequence, creates an alternating voltage, the extent of which depends on the number of revs.

The flywheel has 58 teeth plus a space equivalent to the size of the two missing teeth.

The reference defined by the space for the two missing teeth constitutes the basis for identifying the point of synchronism (TDC).

For a more detailed description of the operating principle, refer to the Fuel System section for the 1581 16V version.

Removing-refitting

Position the vehicle on a lift, then, working from the lower part of the vehicle:

- Disconnect the electrical connector;
- undo the bolt fixing the sensor and remove it from its housing.

Wiring connector

The sensor is connected to the electronic control unit (pins 48 and 49) by twisted cables covered in an outer casing screened from interference connected to earth.

NOTE *The numbers indicate the corresponding control unit pins*

Checking the resistance

The resistance of the sensor can only be measured by disconnecting the connector and connecting an ohmmeter to the sensor.

Resistance: 774-946 ohm at 20°C

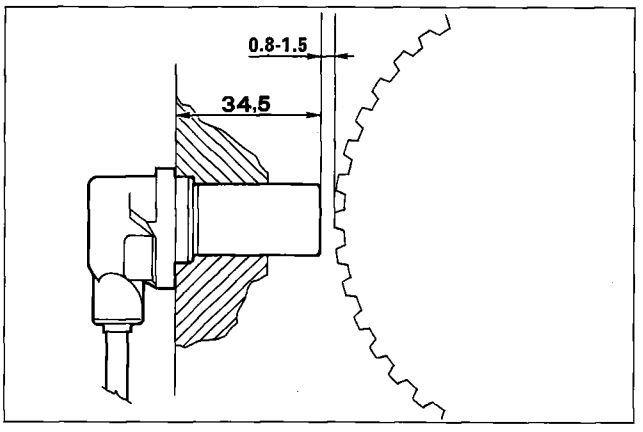

When measuring the distance it is necessary to be certain of being at right angles with the flywheel and corresponding to a tooth and not a gap.

Checking the gap

The rpm and TDC sensor is fixed directly to the cylinder block/crankcase and no adjustments of the gap and the angular position are therefore needed. If a problem is suspected it is possible to check the gap by proceeding as follows:

- remove the rpm and TDC sensor;
- check that the distance between the surface of the sensor and the flywheel tooth corresponds to the sum of the length of the sensor (34.5 mm) with the gap (0.8 - 1.5 mm).

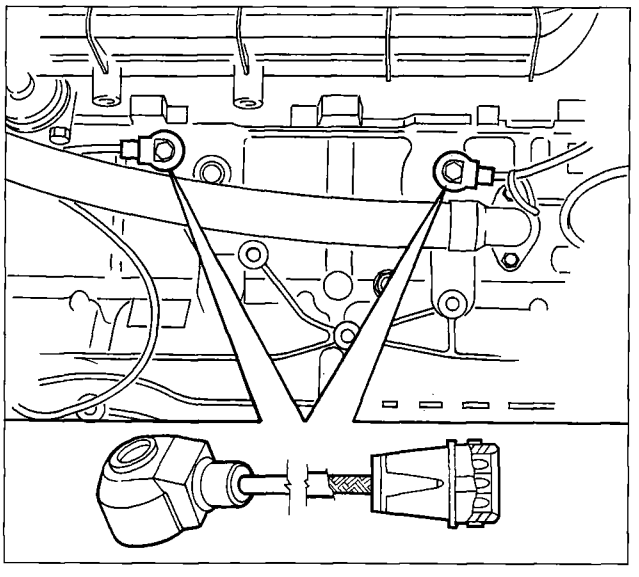

DETONATION SENSORS (0.261.231.095)

The detonation sensors are located on the monobloc under the inlet manifolds and between cylinders 1-2 and 4-5, respectively.

These sensors have a bushing to prevent inapporpriate torque tightening. **In the case of a replacement do not use any washers or shims between the contact surfaces of the engine and the sensor.**

When the engine is knocking (detonation), vibrations of a certain frequency are produced in the cylinder block/crankcase.

This phenomenon produces a mechanical repercussion on a piezoelectric crystal which sends a signal to the control unit, which, on the basis of this signal reduces the ignition advance (from 3° to a maximum of 9.7°) until the phenomenon disappears. Later on, the advance is gradually restored to the basic value.

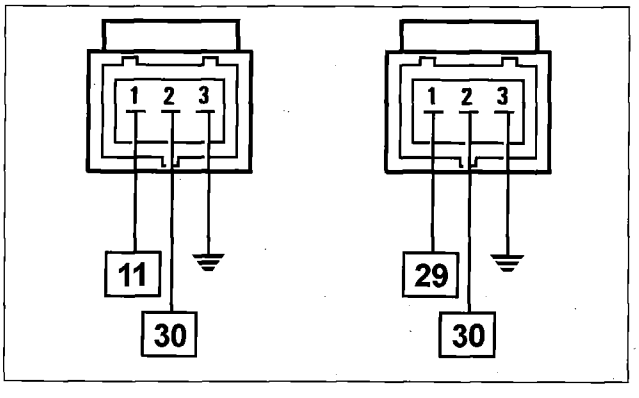

Wiring connector

The numbers indicate the corresponding control unit pins.

Recovery

The ignition advance is calculated according to the temperature of the engine coolant and the temperature of the intake air.

ELECTRIC FUEL PUMP (0.580.453.408)

The electric fuel pump is located inside the tank, housed in a support which also includes the level gauge.
The electric pump is the type with cells with rollers, operated by an electric motor energized by permanent magnets, immersed in the fuel.
A disc rotor (1) located eccentrically in the pump casing contains the cells arranged along its circumference and the metal rollers (2) which are thrust by centrifugal force against the outer track with the effect of guaranteeing the hydraulic seal.

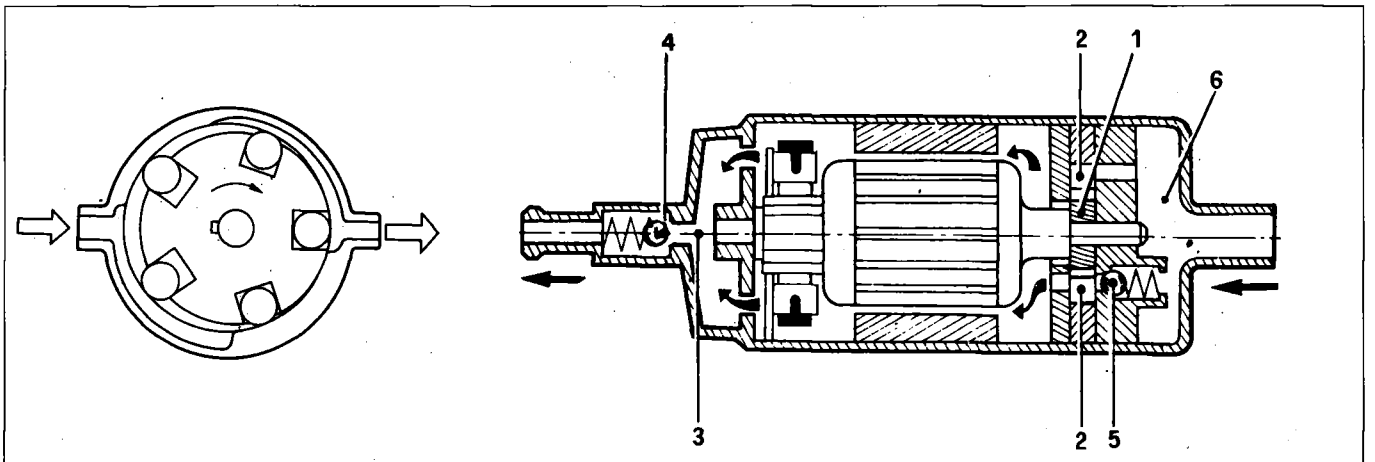

Cross section of electric pump **Longitudinal section of electric pump**

The fuel flows into the empty spaces and is compressed in the supply duct (3). A one-way valve (4) prevents the supply pipe from being emptied when the engine is switched off.
An excess pressure valve (5) short circuits the supply in the inlet chamber (6) when the pressure exceeds 7.5 bar.
The electric pump starts to operate when the ignition switch is turned to the ON position. When the starting stage is over, the electric pump continues to operate with the ignition switch in the ON position, unless the engine speed goes below 225 rpm or the ignition switch is turned to the OFF position.
If the engine cuts out for any reason, with the ignition switch in the ON position, the operation of the pump is automatically interrupted, which constitutes a safety feature.

Diagrammatic longitudinal section and external view of the electric fuel pump

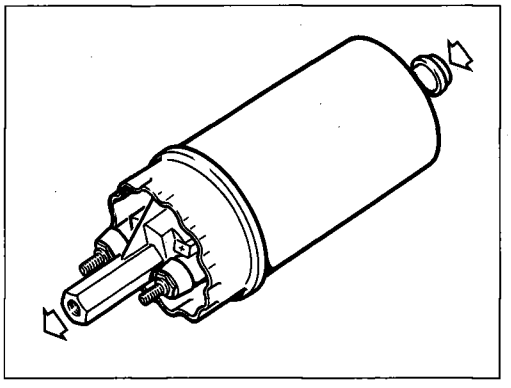

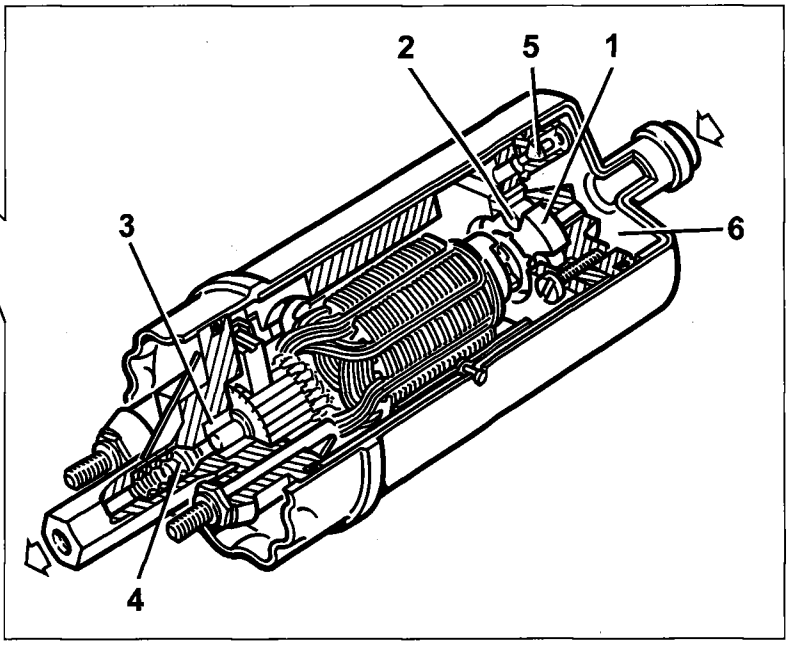

NOTE *For the positioning and the removing-refitting procedures, refer to the Fuel System section for the 1581 16V version.*

FUEL FILTER (A.450.024.262)

The fuel filter is fitted under the floor panel, on the fuel supply pipe. For removing-refitting procedure, refer to the Fuel System section for the 1581 16V version.

FUEL SUPPLY MANIFOLD AND PRESSURE REGULATOR

The fuel supply manifold, which has the function of distributing the actual fuel to the injectors, is made from steel and has seats for the injectors and the pressure regulator and fuel inlet and outlet connectors. The fuel manifold is fixed to the inlet manifold by four brackets.

The pressure regulator is a necessary element in keeping the rise in pressure at the injectors constant. It is a differential, diaphragm type device, regulated at a pressure of around 3 bar.

The pressure regulator it is composed of a metal casing which houses a moving element made up of a metal casing (8) and a diaphragm (4) loaded by a spring (5). When the pre-set force, which is made up of the vacuum at the opposite part of the diaphramg and the spring (5) loading, is exceeded, the fuel driven by the pump causes a valve (7) to open which allows the excess fuel to flow through the pipe (2) to the tank.

The chamber housing the spring is in contact with the engine inlet duct (6) (vacuum signal). The difference between the pressure of the fuel and the vacuum in the inlet manifold is kept constant in all engine operating conditions.

Longitudinal section of fuel supply manifold and pressure regulator

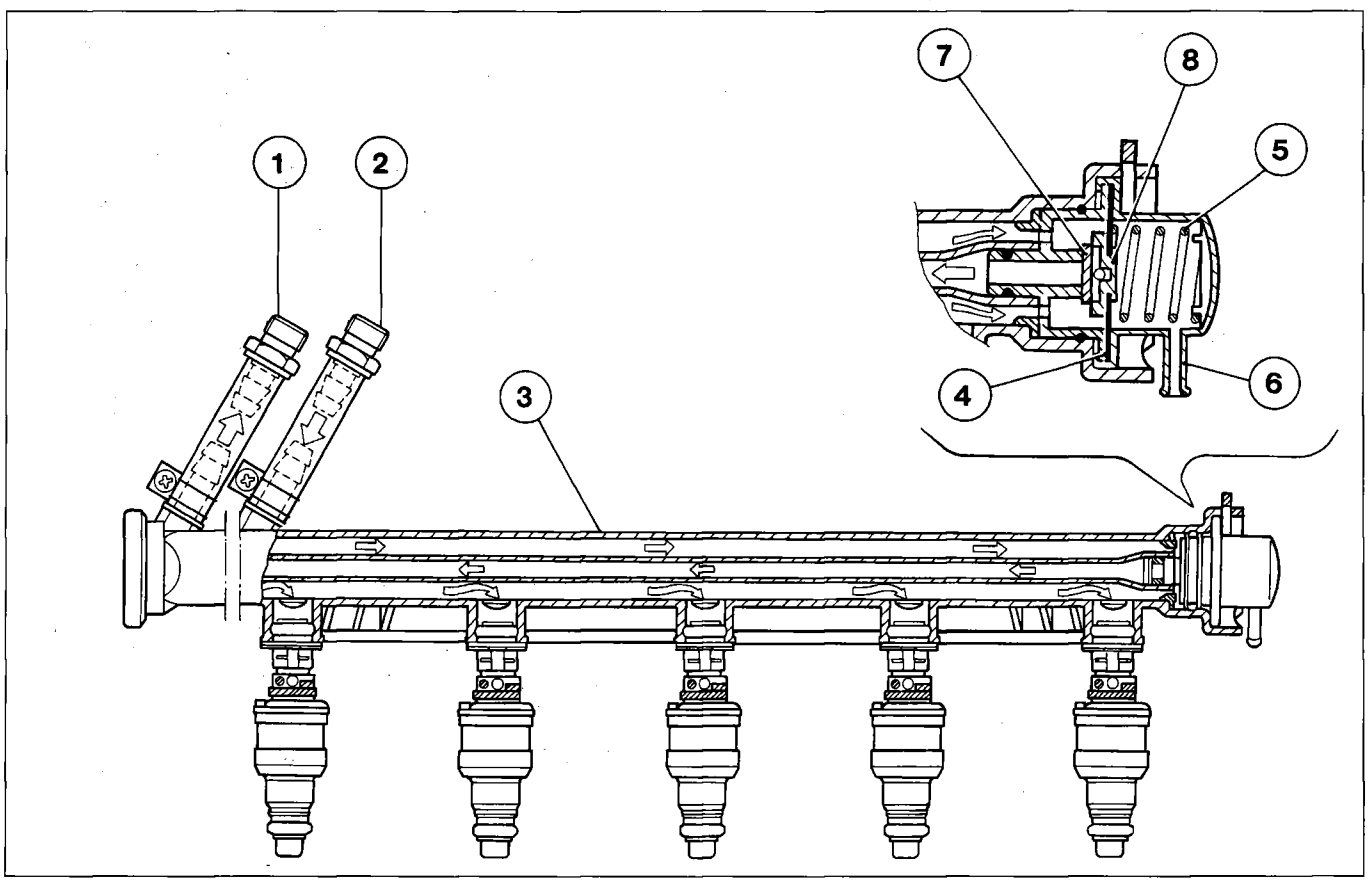

P4F26DJ01

1. Fuel return connector
2. Fuel supply connector
3. Support for injectors and fuel manifold
4. Diaphragm with flow valve
5. Adjustment spring
6. Connection to inlet manifold
7. Flow valve
8. Metal casing

INJECTORS (0.280.150.443)

The twin jet type injectors are fitted on the inlet manifolds, immediately before the inlet valve.
These injectors are specific to engines with 4 valves per cylinder, in effect making it possible to direct the jets towardsthe two inlet valves.

The jets of fuel at a differential pressureof 3 bar which come out of the injector are instantly atomized forming two cones of around 10° each.

The operation of the injectors is the «sequential, timed» type, i.e. the five injectors are controlled according to the inlet sequence for the engine cylinders whilst the supply can already start for each cylinder during the expansion stroke until the inlet stroke has already commenced.
The injectors are fixed by the fuel manifold which presses against them in the housings in the inlet manifolds. They are also anchored to the fuel manifold by means of «safetyclips». Two rubber seals (10) and (11) ensure the seal at the inlet manifold and at the fuel manifold.

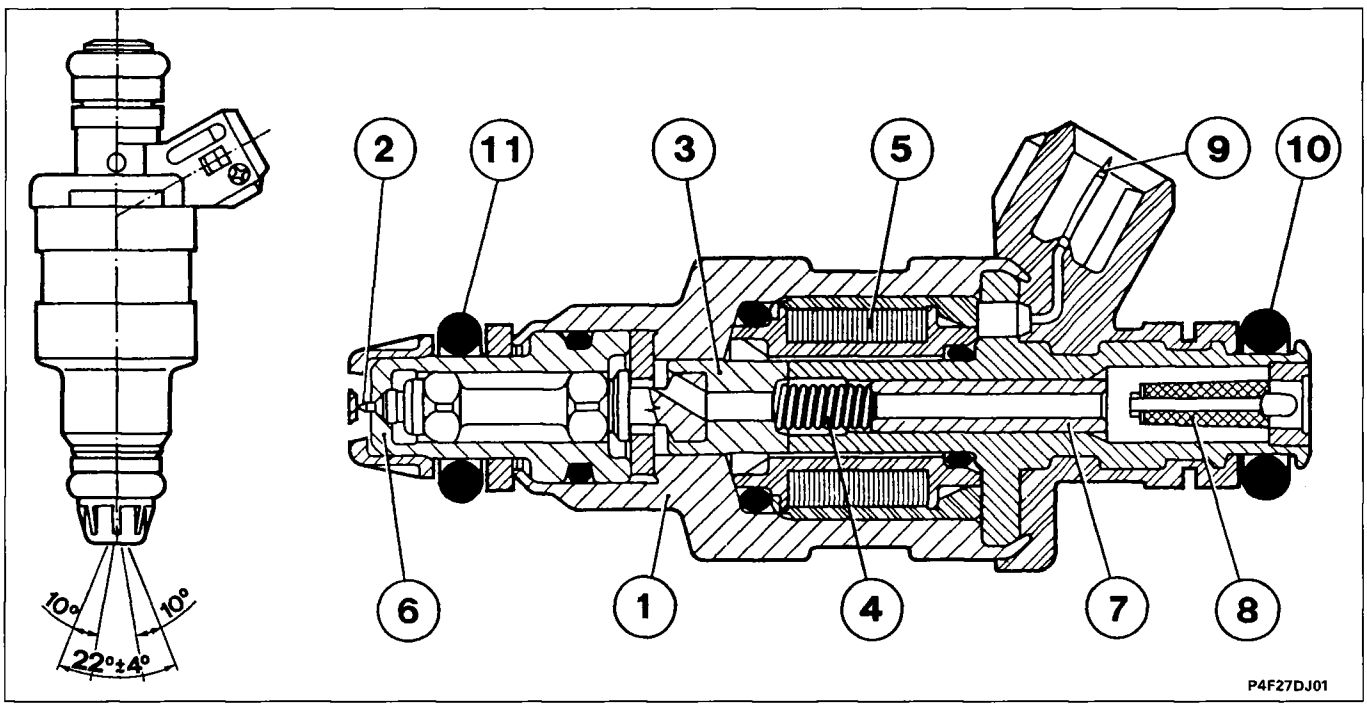

1. Injector casing
2. Needle
3. Magnetic core
4. Coil spring
5. Winding
6. Injector nozzle
7. Adjustable spring
8. Fuel filter
9. Electrical connection socket
10. Fuel seal
11. Vacuum seal

Wiring connector

NOTE *The numbers indicate the corresponding control unit pins arranged in the order of the number of cylinders.*

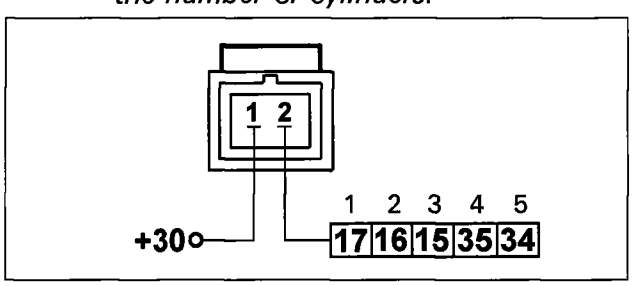

Checking the resistance

The resistance of the injector may be measured by disconnecting the connector and connecting an ohmmeter as shown in the diagram.

Resistance value 16.2 ohm

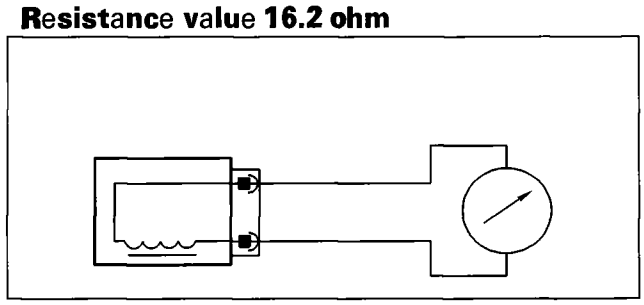

BUTTERFLY CASING

The quantity of air drawn in is determined by the opening of the butterfly situated at the opening of the inlet manifold. The butterfly casing is fixed to the inlet manifold by four bolts; the butterfly is operated by the accelerator pedal by means of levers which produce an opening system where small butterfly opening angles correspond to the pedal being slightly depressed and large opening angles to the pedal being very depressed.

The air required to sustain the engine when idling and with loads applied with the butterfly valve closed, is regulated and by-passed by the engine idle actuator only.

A special screw (1), allows the correct adjustment of the butterfly closure to prevent sticking with the surrounding duct; this screw is not used for adjusting the idle as it is adjusted by fluxing during production and should not be tampered with any under circumstances.

The flow of engine coolant arriving from the thermostat through the inlet and outlet ducts (3) and (5) in the area of the butterfly valve has the task of preventing any condensation and the formation of ice which could be produced in certain external conditions of low temperature and/or high humidity.

The gases escaping from the engine crankcase are drawn into the inlet manifold downstream of the butterfly through the PCV valve (4).

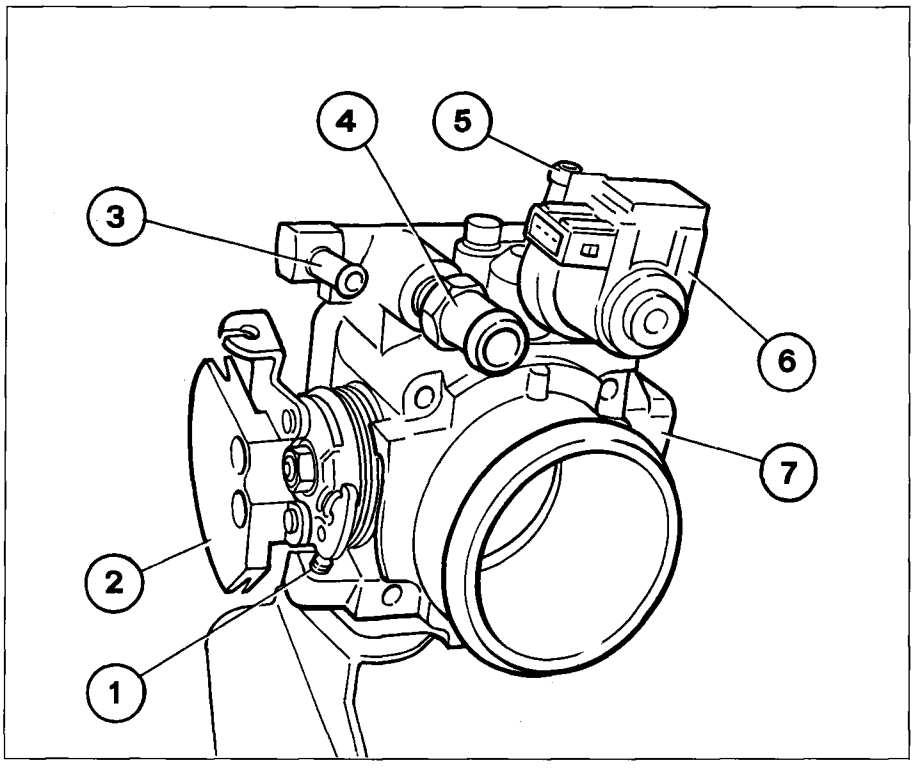

P4F28DJ01

1. Butterfly valve adjustment and anti-tamper screw **(not to be tampered with)**
2. Butterfly opening control levers
3. Attachment for engine coolant supply pipe
4. Attachment for reciculation pipe and recovery of vapours coming from the engine crankcase
5. Attachment for engine coolant return pipe
6. Engine idle speed actuator
7. Butterfly valve position sensor

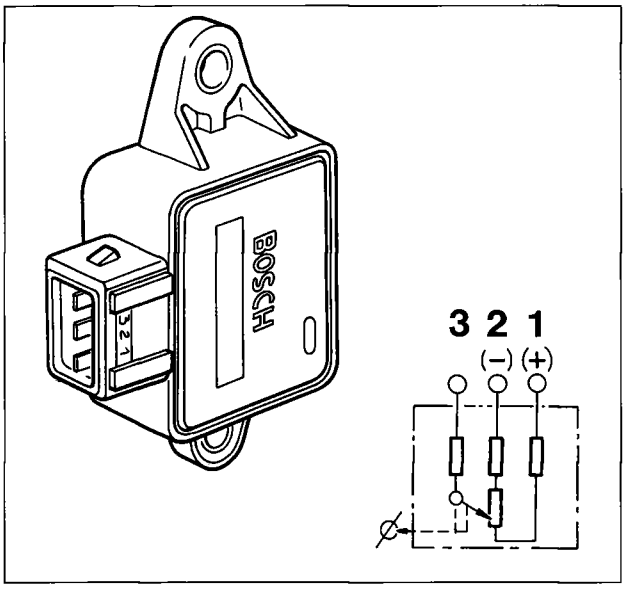

P4F29DJ01

BUTTERFLY VALVE POSITION SENSOR (0.280.122.001)

The sensor is composed of a potentiometer inserted in a plastic container with two fins which contain two NOT SLOTTED openings with the function of ensuring the anchorage and the positioning of the sensor in relation to the butterfly valve. A three pin socket in the container ensures the electrical connection with the electronic control unit.
During operation, the injection/ignition control unit provides the potentiometer with a supply of 5 Volt at pins (1) and (2).
The voltage, at pin 3, is inversely proportional to the opening position of the butterfly valve.
On the basis of the voltage sent by 3, the control unit recognizes the butterfly valve opening condition and suitably corrects the mixture strength.
With the butterfly closed, an electrical voltage signal of around 0.5 Volt reaches the control unit which recognizes the idle and cut off condition (distinguishing between them on the basis of the engine speed).
The potentiometer automatically recognizes the butterfly end of travel position during idling through a "self-adjustment" function.
This dispenses with the adjustment operations and makes it possible, at the same time, to also follow up any wear which may occur for the butterfly closure position.

Recovery

If there is a problem with the sensor, the control unit establishes the following parameters:

Butterfly opening angle = 10°

idle state: air flow rate < 12.8 m3/h;

exit from idle state: air flow rate > 8 m3/h;

full load state: engine load > 6,5 ms and simultaneously > 2000 RPM;

exit from full load state: engine load < 6,5 ms or < 2000 RPM.

Additional provisions

The strategies of gradually decreasing the engine idle speed (dashpot) and the self-adjustment of the idle are stopped.

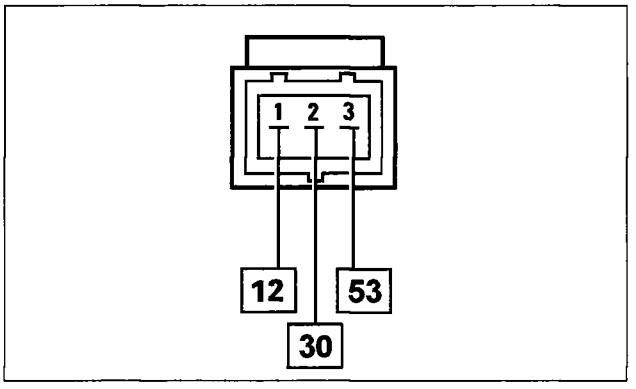

P4F29DJ02

Wiring connector

NOTE *The numbers indicate the corresponding control unit pins*

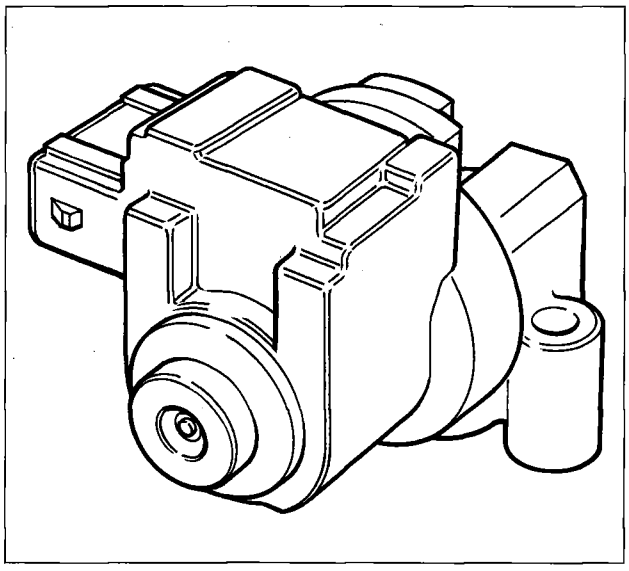

P4F30DJ01

ENGINE IDLE SPEED ACTUATOR (0.280.140.553)

It is made up of an electric motor which, opening the flow of supplementary air (in parallel to that coming out of the accelerator butterfly released) in the butterfly casing, automatically keeps the engine idle speed constant irrespective of the load conditions (additional consumers switched on or engine hot or code, etc.).
The opening of the flow determined by the rotation of the distributor, is controlled by electrical impulses processed by a special section of the injection control unit which makes the distributor rotate in one direction or another according to the revs per minute at which the engine is rotating.

Recovery

If there is a problem with the actuator, the control unit activates different recovery strategies according to the butterfly valve opening angle.

Recovery 1: valve in recovery position, close to the idle air flow rate for:

- c.c. V battery at opening or closing winding or opening and closing;
- c.a. at opening or closing winding or opening and closing;
- c.c. V battery at opening winding and c.a. at opening winding
- c.c. V battery at closing winding and c.a. at opening winding.

Recovery 2: valve open 0% for:

- c.c. V battery at opening winding and c.c. GND at closing winding;
- c.a. at opening winding and c.c. GND at closing winding.

Recovery 3: valve open 50% for:

- c.c. GND at opening or closing windings or opening and closing

Recovery 4: valve open 100% for:

- c.c. V battery at closing winding and c.c. GND at opening winding;
- c.a. at closing winding and c.c. GND at opening winding.

Additional provisions

Immobilizing of idle self-adjustment at current values and immobilizingof idle control.

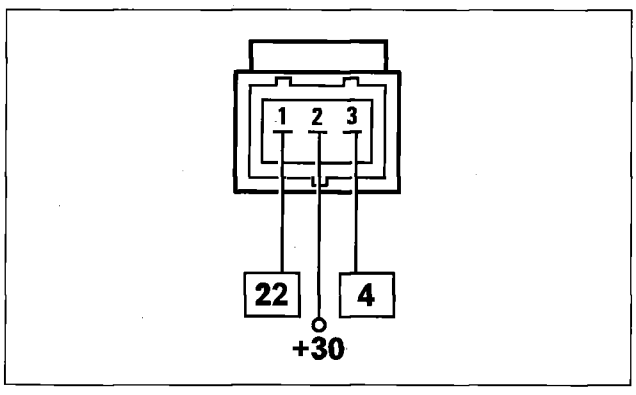

P4F30DJ02

Wiring connector

NOTE *The numbers indicate the corresponding control unit pins.*

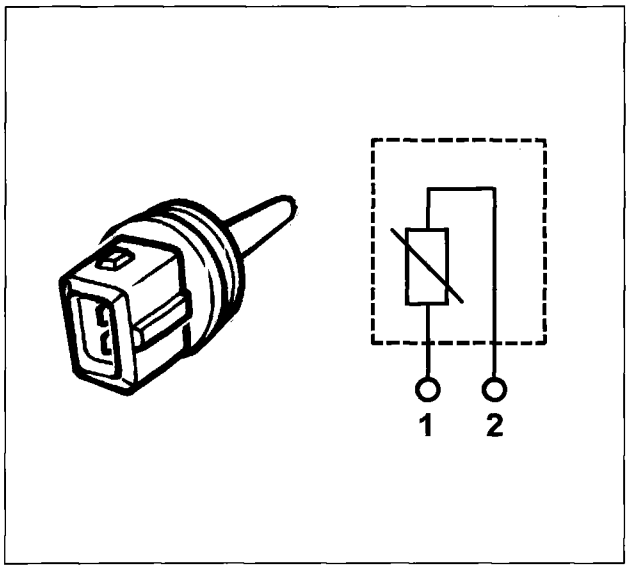

P4F31DJ01

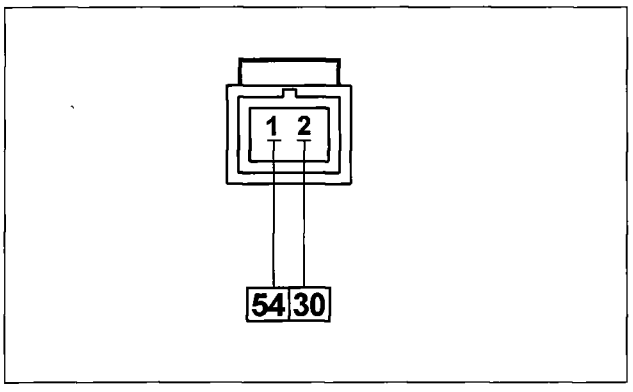

P4F31DJ02

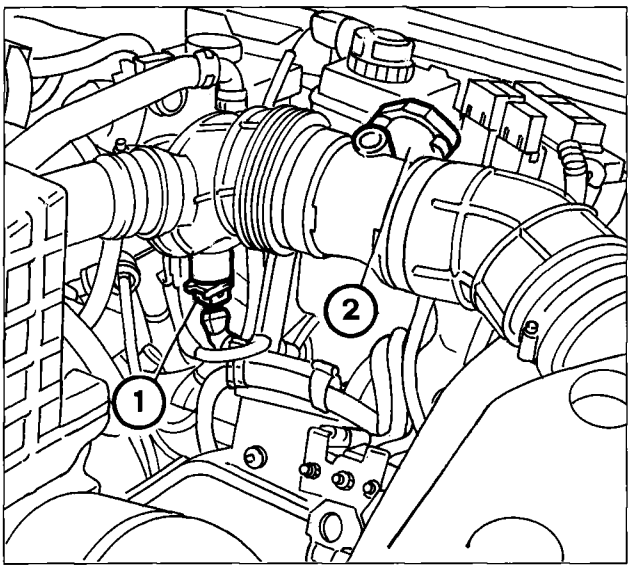

P4F31DJ03

1. Air temperature sensor
2. Flow meter

AIR TEMPERATURE SENSOR (0.280.130.073)

The intake air temperature sensor is, on this version, separate from the air flow meter: it involves an NTC sensor (Negative Temperature Coefficient) whose electrical resistance decreases as the temperature increases.

Since the control unit inlet circuit is designed as a voltage dvidider, this voltage is divided between a resistance in the control unit and the sensor NTC resistance. As a result the control unit is capable of evaluating the variations in the sensor resistance through the changes in voltage and thereby obtain information concerning the temperature.

Recovery

If, 3 minutes after starting, the control unit detects a temperature (T air) of < -35 °C o r> 130 °C for 30 seconds, then T air = 20.4 °C is assumed as a fixed parameter

Additional provisions

Immobilizing of the self-adjustment of the mixture strength at current values.

Wiring connector

NOTE *The numbers indicate the corresponding control unit pins.*

FLOW METER (0.280.217.111)

The air flow meter is the "heated film" type; the operating principle is based on a heated diaphragm which is placed in a measuring duct through which the inlet air entering the engine flows.

The film diaphragm is kept at a constant temperature (~120 °C above the temperature of the air) by the heating resistance in contact with it.

The mass of air which passes through the measuring duct tends to remove heat to the diaphragm, therefore in order to keep the latter at a constant temperture, a certain current must flow through the heating resistance; this current is measured with a suitable Wheatstone bridge.

The current measured is therefore proportional to the mass of the air flow.

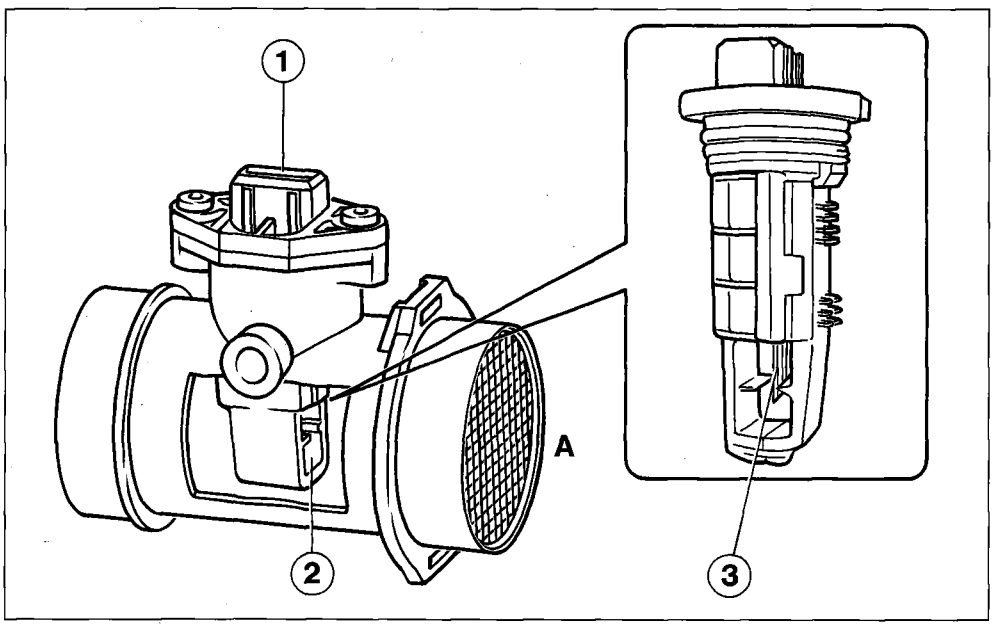

P4F32DJ01

1. Connector
2. Measuring duct
3. Hot film sensor

A= Air intake

NOTE *This flow meter measures the mass of air (and not the volume) directly thereby eliminating problems of temperature, altitude, pressure etc.*

Description of the operation

The Wheatstone bridge (made up of R3, R2, Rs, Rt+R1) is balanced when the Rs is around 120 °C above the temperature of the air. The air which passes through the diaphragm subtracts heat to the Rs, therefore the bridge is unbalanced. This situation is identified by the circuit starting at IC1 which operates the transistor T1, in a manner which is proportional to the imbalance of the bridge, and as a result more current passes through Rh to heat up Rs and restore the balance for the bridge. The IC2 circuit measures the current passing through Rh. This current makes it possible to keep the bridge balanced and therefore proportional to the mass of air passing through the air flow meter.

Recovery

In the absence of a simultaneous error at the butterfly potentiometer, the idle engine load is calculated according to the number of revs if the engine is idling, otherwise a fixed engine load value is allocated. If there is a simultaneous error at the butterfly potentiometer, the engine load and ignition values are allocated by means of a table according to the number of revs.

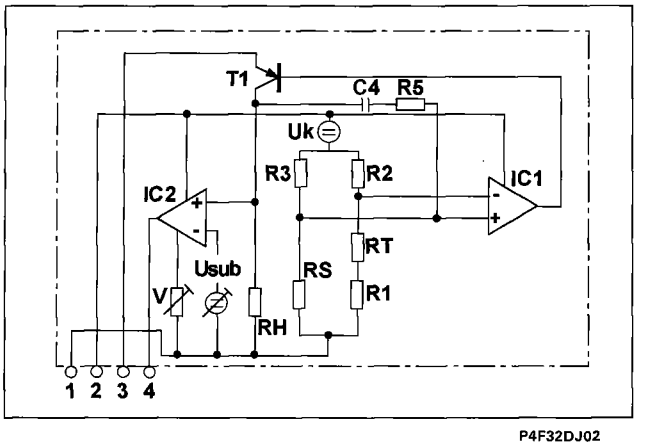

P4F32DJ02

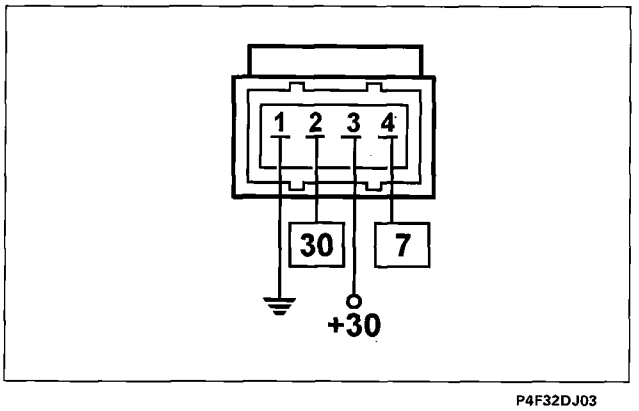

P4F32DJ03

Additional provisions

Immobilizing of self-adjustment of mixture and idle at current values.

Wiring connector

NOTE *The numbers indicate the corresponding control unit pins.*

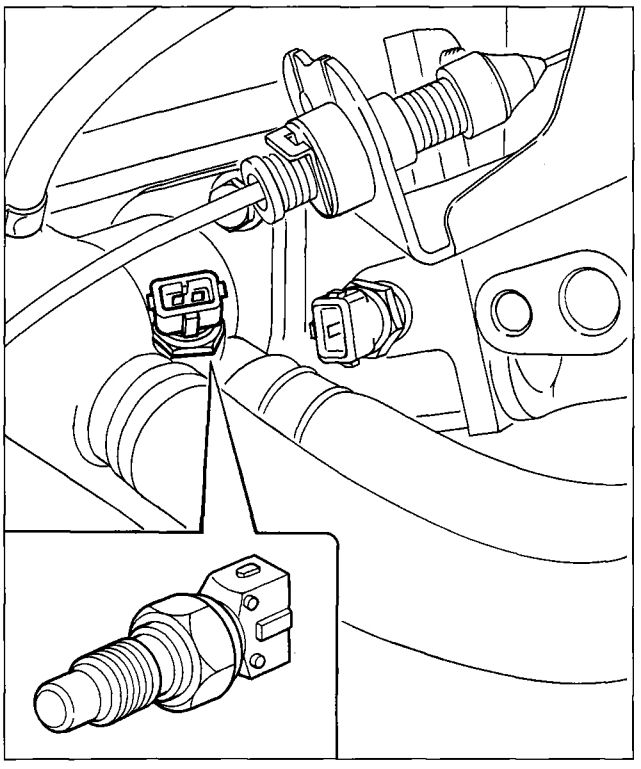

P4F33DJ01

The graph below shows the typical sensor trend, which can be measured by disconnecting the connector and connecting an ohmmeter as illustrated in the diagram.

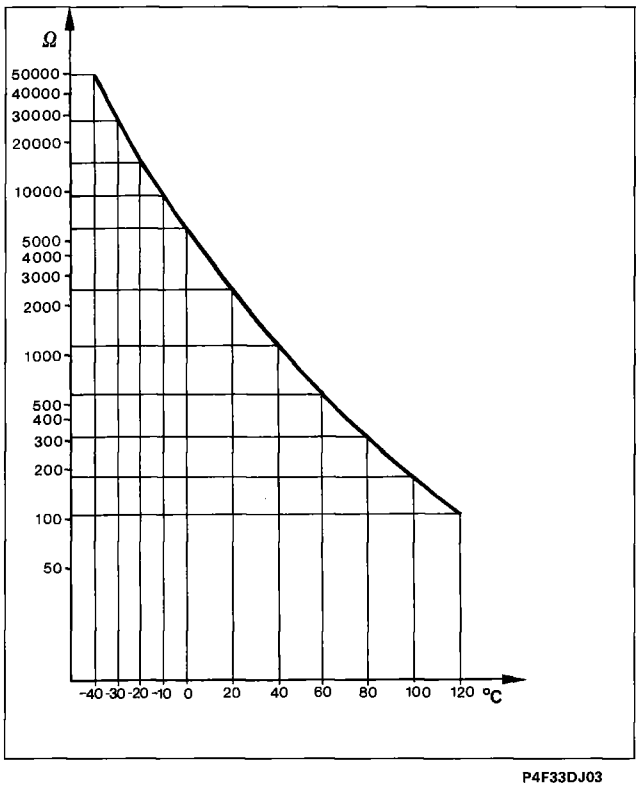

P4F33DJ03

COOLANT TEMPERATURE SENSOR (0.280.130.026)

This sensor is fitted close to the themostat casing with the sensitive element in contact with the coolant. It is made up of a brass casing which protects the actual resistive element comprising an NTC (Negative Temperature Coefficient) «thermistor», where the electrical resistance of the sensor decreases as the temperature increases).
It provides the control unit with a voltage which varies according to the temperature of the engine, in order to correct the information concerning the air flow rate from the air flow meter so that, on the basis of the signal received by the sensor, the control unit can operate the fuel injection for a longer time, thereby providing the necessary enrichment when the engine is running at temperatures below the operating temperature.

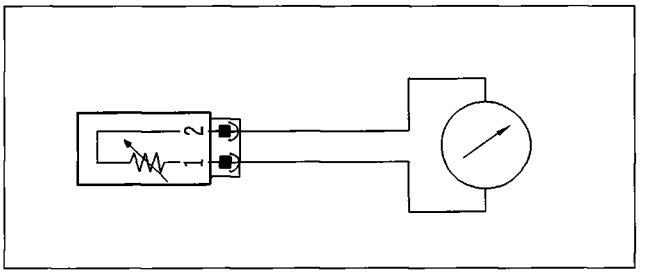

P4F33DJ02

Recovery

If T air ⩽ 19.9 °C, T engine = T air is assumed for three minutes, then T engine is assumed as = 80 °C. If T air ⩾ 19.9 °C, then T engine is assumed as 80 °C immediately.

Additional provisions

Immobilizing the self-adjustment of the mixture and the idle at current values.

Wiring connector

The numbers indicate the corresponding control unit pins

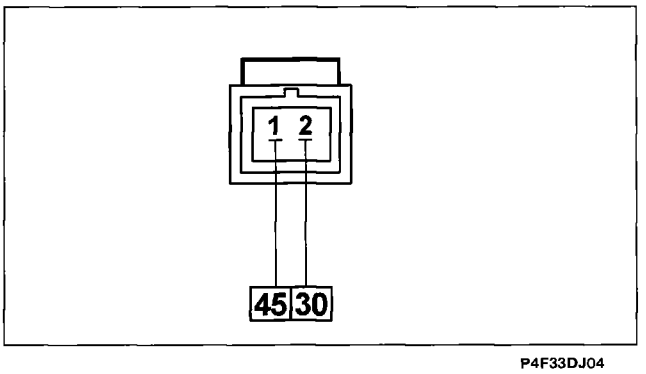

P4F33DJ04

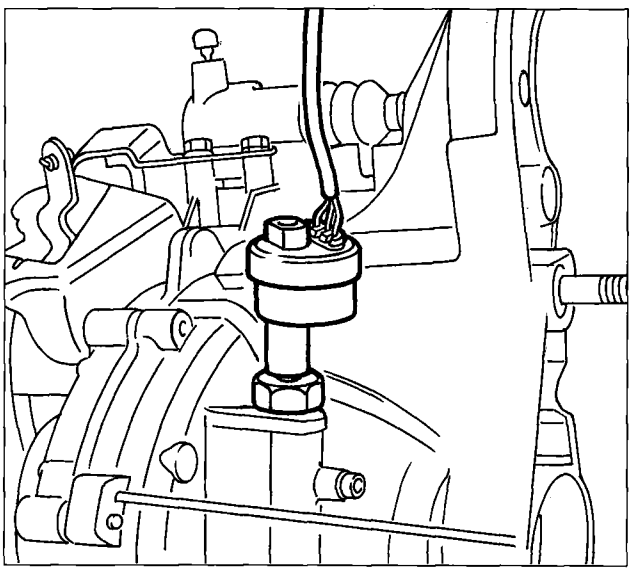

SPEEDOMETER SENSOR

The speedometer sensor (vehicle speed sensor) it is composed of Hall effect sensor located at the differential outlet.
The sensor transmits a signal to the control unit whose frequency varies according to the speed of the vehicle.
The control unit uses this information to improve the management of the engine idle adjustment actuator and for the CUT-OFF strategy.

The speedometer sensor signal is also processed to calculate and memorize the mileage covered in the control unit; this information can be read using the Fiat/Lancia Tester.

PHASE TRANSFORMER

In order to achieve a good compromise between a high performance in terms of power at high speeds and good torque at low speeds, this engine is fitted with a phase transformer (electronic operation and hydraulic implementation) for the inlet camshaft.

This device makes it possible to alter the timing diagram (inlet stroke) depending on the load required by the engine; this parameter is processed by the MOTRONIC control unit on the basis of the electric signals received by the air flow meter and the rpm sensor, and sent as a command to the phase transformer solenoid valve.

In terms of construction, the device is made up of a main assembly fitted on the inlet camshaft which has the task of varying the angular position of the shaft in relation to the drive pulley.

There is also an implementation valve, operated by a solenoid valve, both on the inlet manifold and hydraulically connected to the main assembly through suitable ducts.

The operating principle is as follows:

- with the temperature of the coolant below 40 °C and when the engine is idling or the speed exceeds 4800 rpm, the solenoid valve (1) is de-energized, therefore the valve chest (2) thrust by the opposing spring (3) remains raised not allowing the oil arriving from the duct (A) to reach the transformer.

  In this case the inlet valve timing remains unaltered.
  With the coolant temperature above 40 °C and with the engine speed above idling and below 4800 rpm with the butterfly angle more than around 8°, the solenoid valve (1) is energized, pushing the valve chest (2) downwards. In this position the oil coming from the duct (A), enters the piston chamber and from there duct (C) inside the latter through a special port.
  The oil can only leave the above duct through the upper port (in contact with the oil supply duct (D) to the transformer) because as the valve chest (2) is lowered the lower port is not in contact with the exhaust duct (E).
  The oil reaches the chamber (G) through ducts (D) and (F), moving the piston (4) axially towards the engine which, having helical teeth on the outside is forced to rotate in a clockwise direction (as seen from the timing side) as a result of this axial movement.
  Its rotation is transmitted, by means of straight toothed splining to the pinion (5) which, bolted onto the threaded element of the camshaft (6), transmits the rotation of the shaft, thereby altering the timing of the inlet valves during the advance by 9°.

When the solenoid valve is de-energized, the valve chest (2) returns to the initial position, interrupting the flow of oil under pressure in the chamber (G), but allowing the return of the oil to the exhaust, thanks to the thrust of the opposing spring (7).

An additional duct ensures the lubrication of the camshaft bearing even when the device is not activated.
The oil which seeps out and reaches the solenoid valve chamber (H) is dispelled through the drainage duct (E).

Recovery

If there is a problem with the solenoid valve, the final operating stage (driver) in the control unit is de-activated.

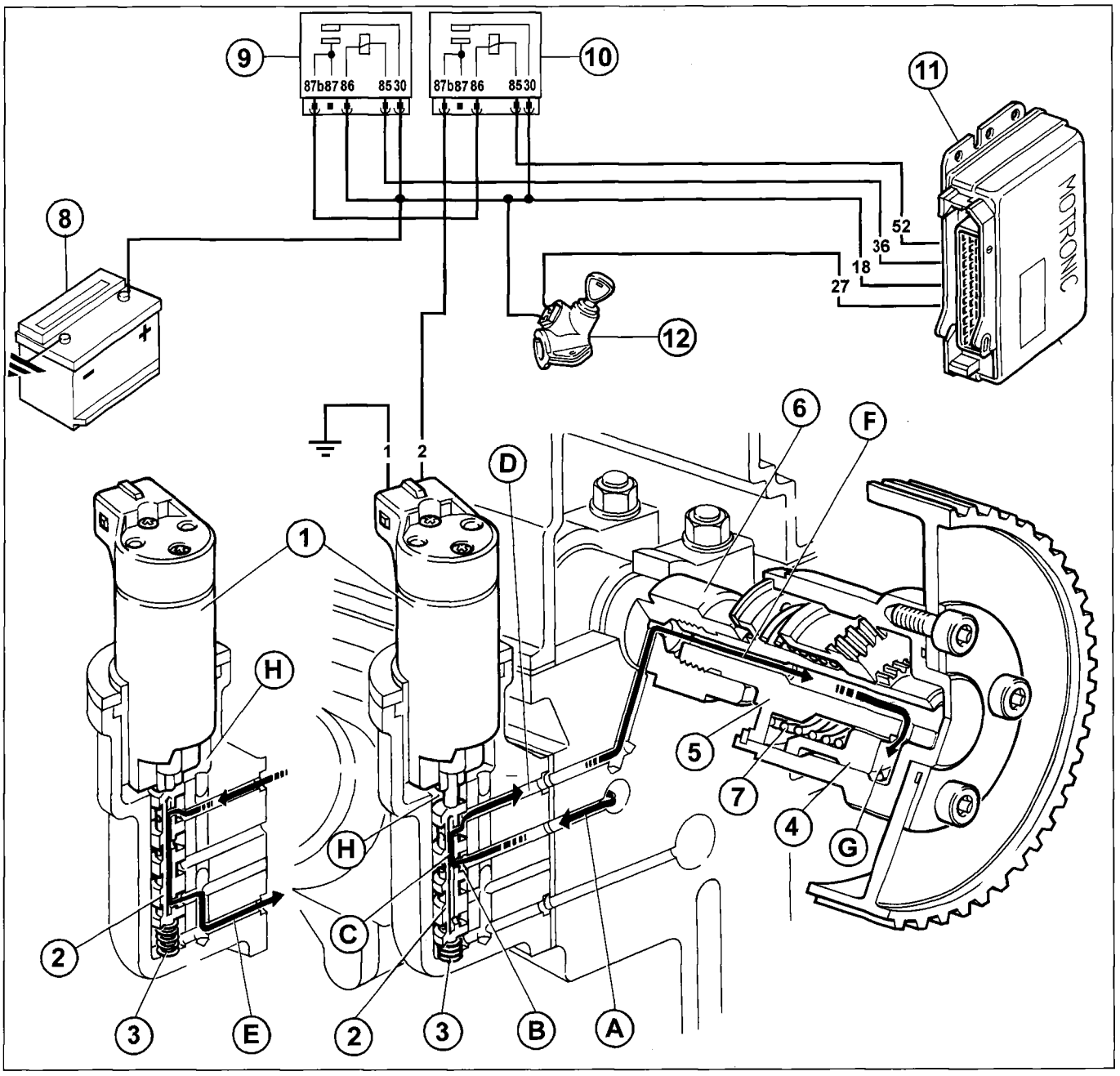

1. Solenoid valve
2. Valve chest
3. Valve chest spring
4. Piston
5. Pinion
6. Camshaft element
7. Piston spring
8. Battery
9. Injection/ignition system relay
10. Phase transformer solenoid valve relay feed
11. Injection/ignition control unit
12. Ignition switch

Copyright by Fiat Auto

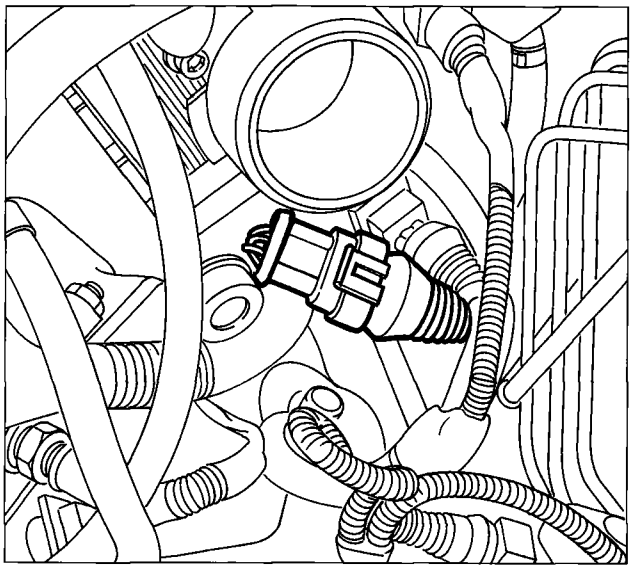

P4F36DJ01

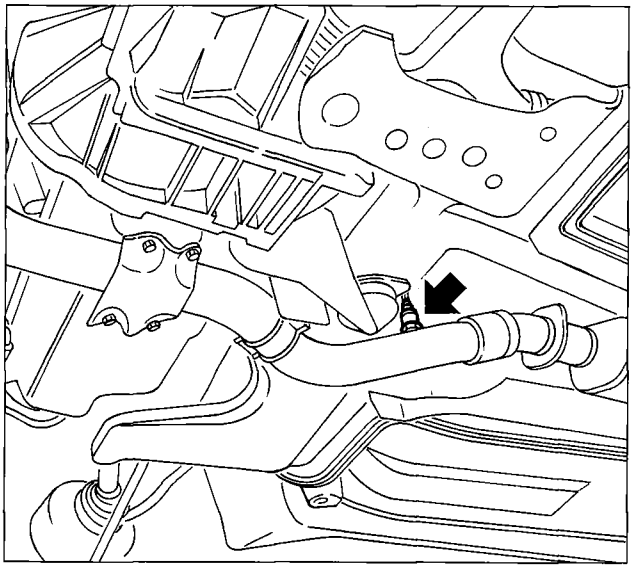

P4F36DJ02

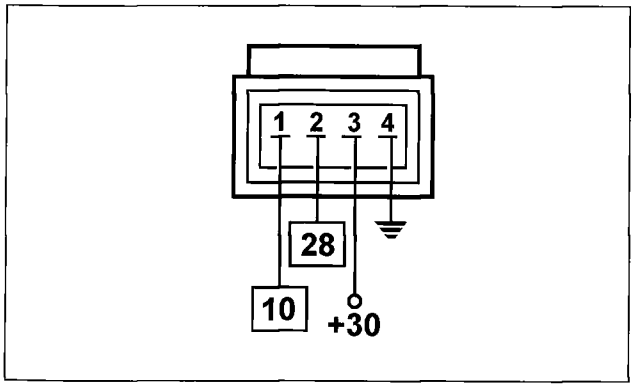

P4F36DJ03

LAMBDA SENSOR (0.258.003.466)

To respond to the strict legislation concerning harmful exhaust emissions for internal combustion engines, which require increasingly precise metering of the air/fuel mixture, the vehicle is equipped with a heated Lambda sensor with four wires which measure the oxygen content of the exhaust gases. For a complete description of the Lambda sensor, refer to the Fuel System section for the 1581 16V version.

The sensor can be rapidly put out of action by the presence of even slight amounts of lead in the fuel.

Removing-refitting

- Position the vehicle on a lift.
- Disconnect the negative lead from the battery.
- Disconnect the electrical connection under the butterfly casing.
- Raise the vehicle.
- Remove the Lambda sensor from its housing.
- During tightening, do not exert any force on the component or else it will be irreparably damaged.

If the Lambda sensor is being replaced, when refitting smear graphite anti-seizing grease (such as for example Bosch VS 14016-FT) on the threaded section.

Tightening torque 5 - 6 daNm

Recovery

The Lambda information is ignored (open loop) for sensor voltages > 1.099 V or between 0.400 and 0.518 V for more than 2.55 s.

Immobilizing self-adjustment of mixture strength for sensor voltage < 0.0879 V for more than 2.55 s.

Open loop and maximum Lambda integrator value (FR) the last good reading for the sensor voltage < 0.0879 V and simultaneously FR=1.4.

Immobilizing of FR at limit value reached for FR > 1.25 or < 0.75 for at least 15 s.

Connettore cablaggio

The numbers indicate the corresponding control unit pins.

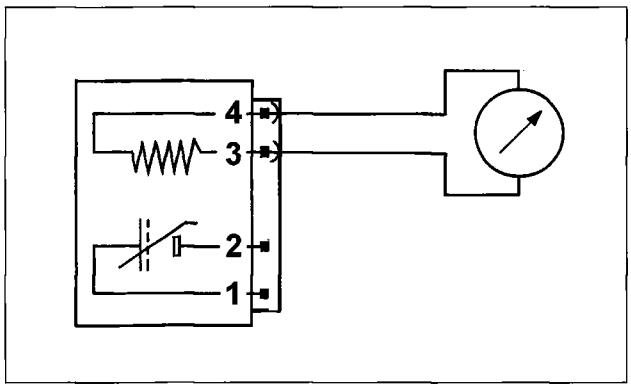

P4F37DJ01

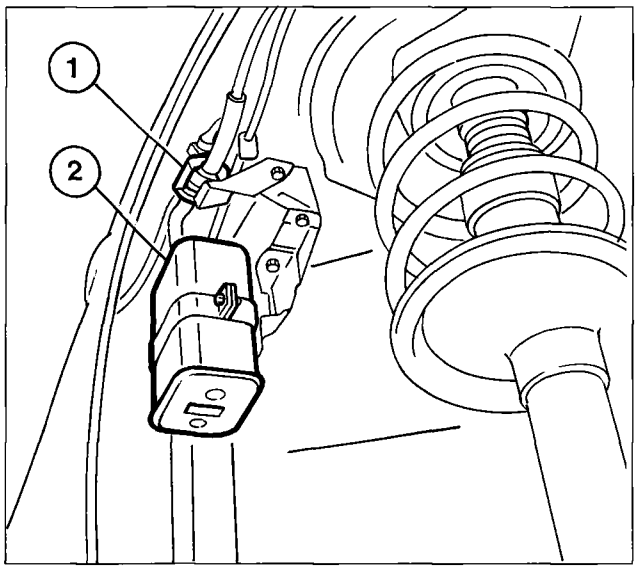

P4F37DJ02

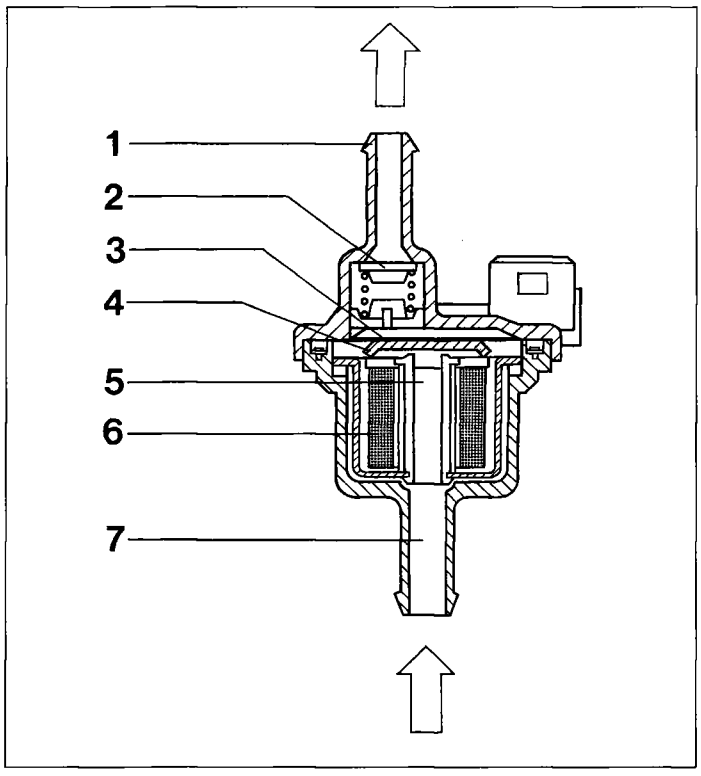

P4F37DJ03

Checking the resistance

The resistance of the sensor heater can be measured by disconnecting the connector and connecting an ohmmeter as shown in the diagram.

Resistance: 4.5 ± 0.5 ohm at 20 °C

CHARCOAL FILTER AND FUEL VAPOUR CUT OUT SOLENOID VALVE

The charcoal filter and the solenoid valve are located inthe right wheel arch.
For the description of the charcoal filter refer to the Fuel System section for the 1581 16V version.

1. Vapour cut out solenoid valve
2. Charcoal filter

Vapour cut out solenoid valve (0.280.142.300)

The function of this valve is, via the electronic control unit, to control the quantity of petrol vapours drawn in by the charcoal filter and directed to the inlet manifold.

If there is no supply, this valve is in the open position; when the key is turned to the ON position, it closes, preparing for operation. In effect, the solenoid valve (6), if energized, attracts the shutter (4) which, overcoming the loading of the spring (3), closes the aperture (5) preventing the flow of petrol vapours.

The operation is controlled by the electronic control unit in the following way:

- during starting the solenoid valve remains closed, preventing the petrol vapours from excessively enriching the mixture;
- with the engine started up, the electronic control unit sends the solenoid valve a signal which modulates the opening.

In this way the control unit controls the quantity of petrol vapours sent to the inlet, thereby avoiding substantial variations (above all during idling) of the mixture strength.

NOTE *The solenoid valve must be fitted correctly: the arrow on the casing should be positioned towards the vacuum pick up on the inlet manifold.*

1. Inlet union
2. One-way valve
3. Spring
4. Shutter
5. Outlet aperture
6. Solenoid valve
7. Outlet union

Removing-refitting

The procedure is valid for both the charcoal filter and the vapour cut out solenoid valve.

- Raise the vehicle;
- remove the right front wheel;
- remove the right front wheel arch rear lining;
- undo the bolt fixing the component concerned to the mounting bracket;
- remove the electrical connection and the pipes connected;
- remove the component concerned.

Recovery

Immobilizing of the self-adjustment of the mixture strength.

Immobilizing of the self-adjustment of the fuel anti-evaporation system.

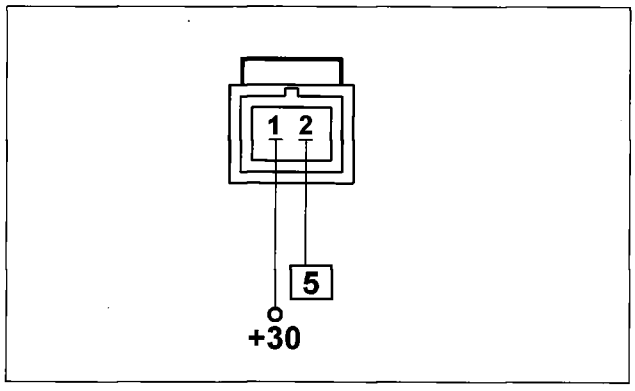

Wiring connector

NOTE *The numbers indicate the corresponding control unit pins.*

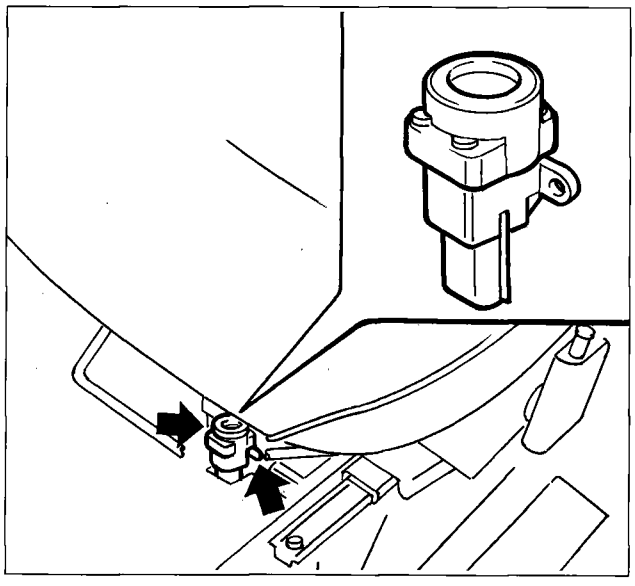

P4F48CJ02

INERTIA SWITCH

In order to improve the degree of safety for the occupants of the vehicle in the case of an impact, the vehicle is equipped with an inertia switch located inside the passenger compartment, under the driver's seat.

This sensor reduces the risk of fire (as a result of fuel escaping from the injection system) by de-activating the electric pump which supplies the injection circuit.

For the complete description and the removing-refitting procedure, refer to the Fuel System section for the 1581 16V engine.

After an even apparently slight impact, if there is a smell of fuel or there are leaks from the fuel system, do not turn the switch back on, but search for the problem first and remedy it to avoid the risk of fire.

MULTI-PURPOSE VALVE AND SAFETY AND VENTILATION VALVE

These valves belong to the anti-evaporation and fuel vapour recirculation system. For a description of them, refer to the Fuel System section for the 1581 16V version.

CHECKS - ADJUSTMENTS AND REPAIR OPERATIONS TO THE BOSCH MOTONIC M 2.10.4 INJECTION/IGNITION SYSTEM OUTSIDE OF THE FAULT DIAGNOSIS WITH THE FIAT/LANCIA TESTER

THE FOLLOWING PRECAUTIONS SHOULD BE OBSERVED WHEN WORKING ON A VEHICLE EQUIPPED WITH A MOTRONIC INJECTION/IGNITION SYSTEM:

- *do not start up the engine when the terminals for the electrical connections are badly connected or slack at the battery poles;*
- *do not use a rapid battery charger to start up the engine;*
- *never disconnect the battery with the engine running;*
- *when charging the battery, disconnect it first from the network;*
- *if the vehicle is going in the drying oven after painting, at temperatures in excess of 80 °C, then the injection/ignition electronic control unit must be removed first;*
- *do not attach or disconnect the electronic control unit multiple connector with the ignition switch in the ON position;*
- *always disconnect the negative battery lead before carrying out electrical welds on the vehicle.*

Remember that this system has a memory which is always supplied (stand-by) where the self--adjustment values are memorized. The operation of disconnecting the battery involves the loss of this information which can only be acquired again after a certain distance so this operation should be limited as far as possible.

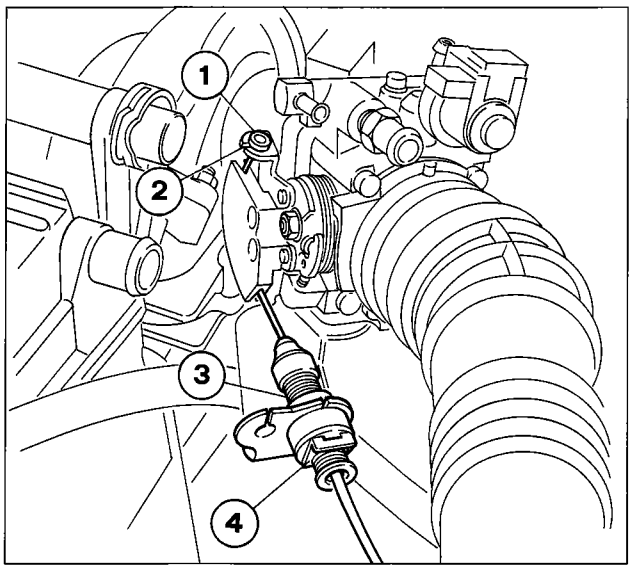

P4F39DJ01

ADJUSTING THE ACCELERATOR CABLE

The adjustment of the accelerator cable is achieved by moving the clip (4) in the different bush (3) splines.

Position the clip so that the head (1) of the accelerator cable enters the slot (2) freely without altering the engine idle speed.

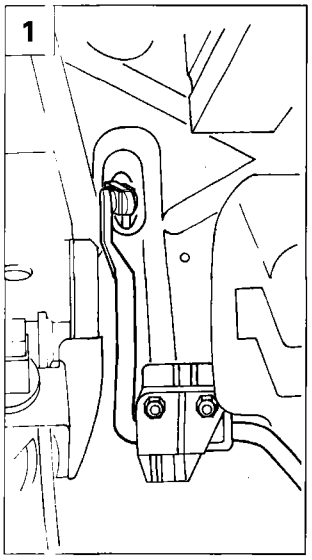

P4F40DJ01

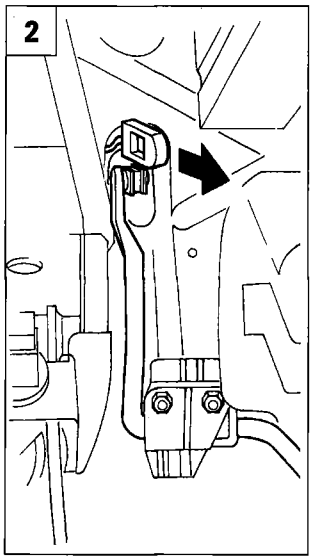

P4F40DJ02

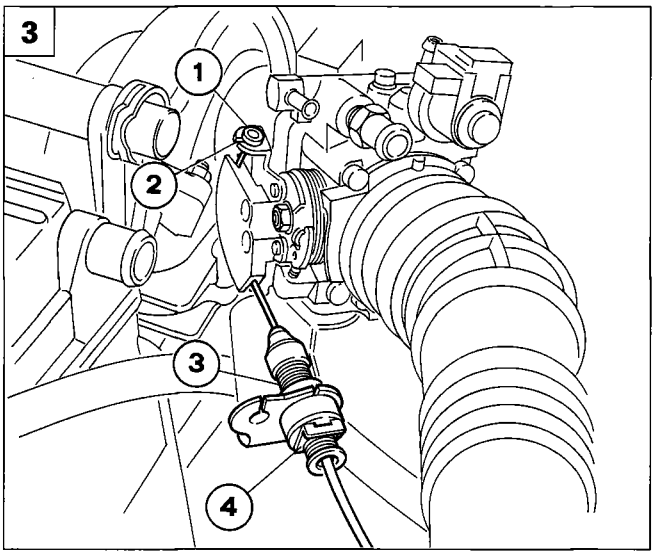

P4F39DJ01

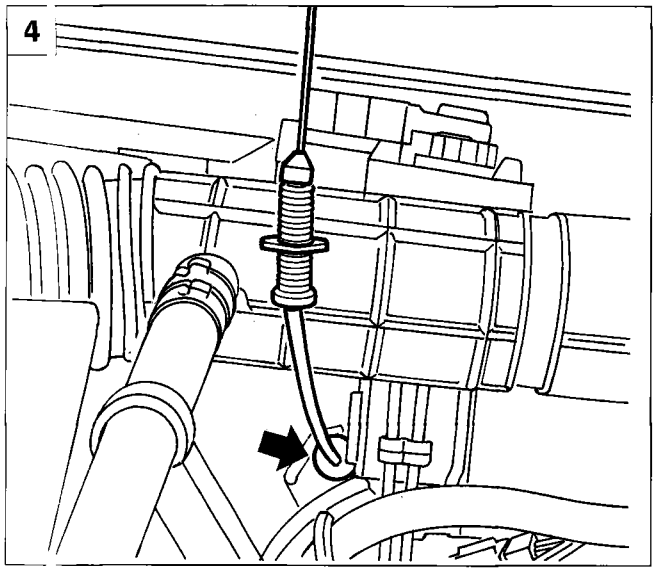

P4F64BJ02

REMOVING-REFITTING ACCELERATOR CABLE

Disconnect the battery lead, then proceed as described below:

1-2. Working from inside the vehicle, disconnect the cable from the anchorage on the accelerator pedal.
3. Rotate the butterfly valve control lever in the engine compartment and release the head (1) from the slot (2). Remove the clip (4) and remove the cable (3) from the supporting bracket.
4. Remove the flexible buffer from the anchorage opening in the dashboard bulkhead and extract the complete accelerator cable.

When refitting, adjust the accelerator cable as described in the paragraph "Accelerator cable adjustment".

REMOVING-REFITTING ACCELERATOR PEDAL

For the procedure of removing-refitting the accelerator pedal, refer to the Fuel System section for the 1581 16V version.

REMOVING-REFITTING FUEL MANIFOLD COMPLETE WITH INJECTORS AND PRESSURE REGULATOR

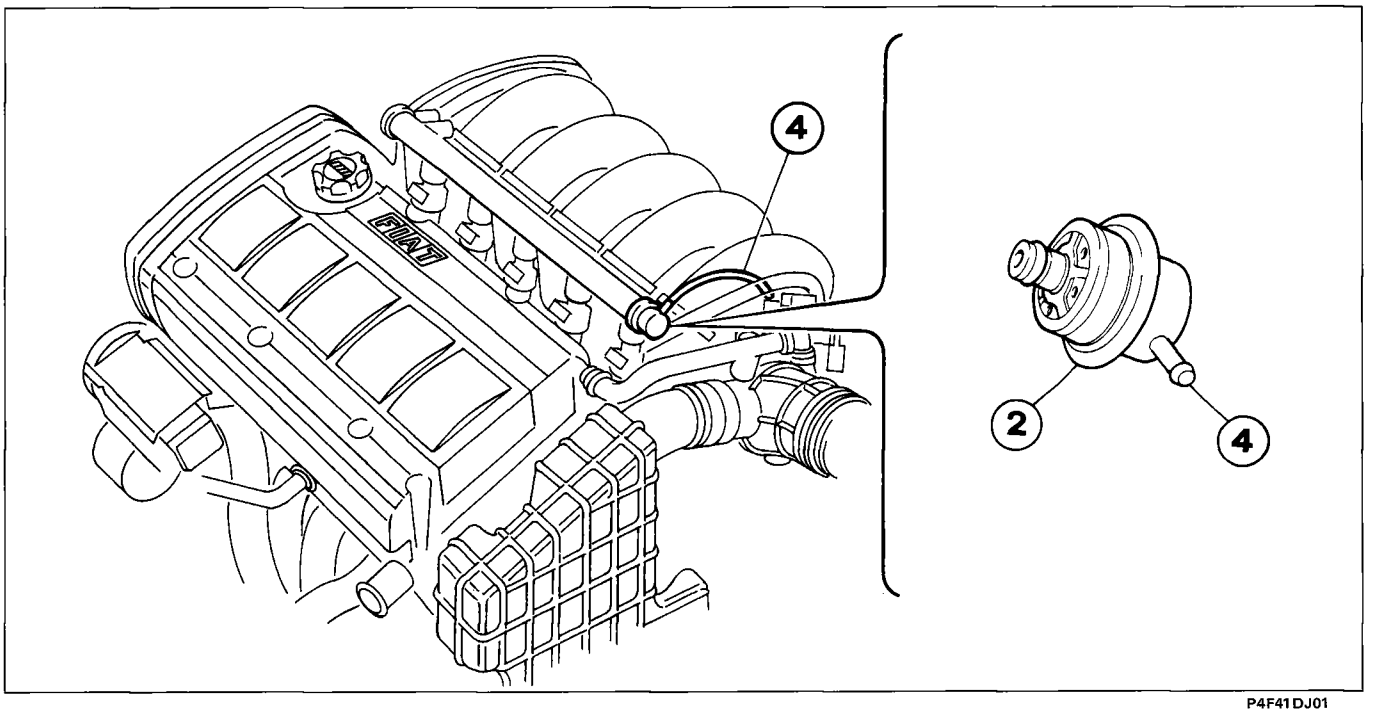

P4F41DJ01

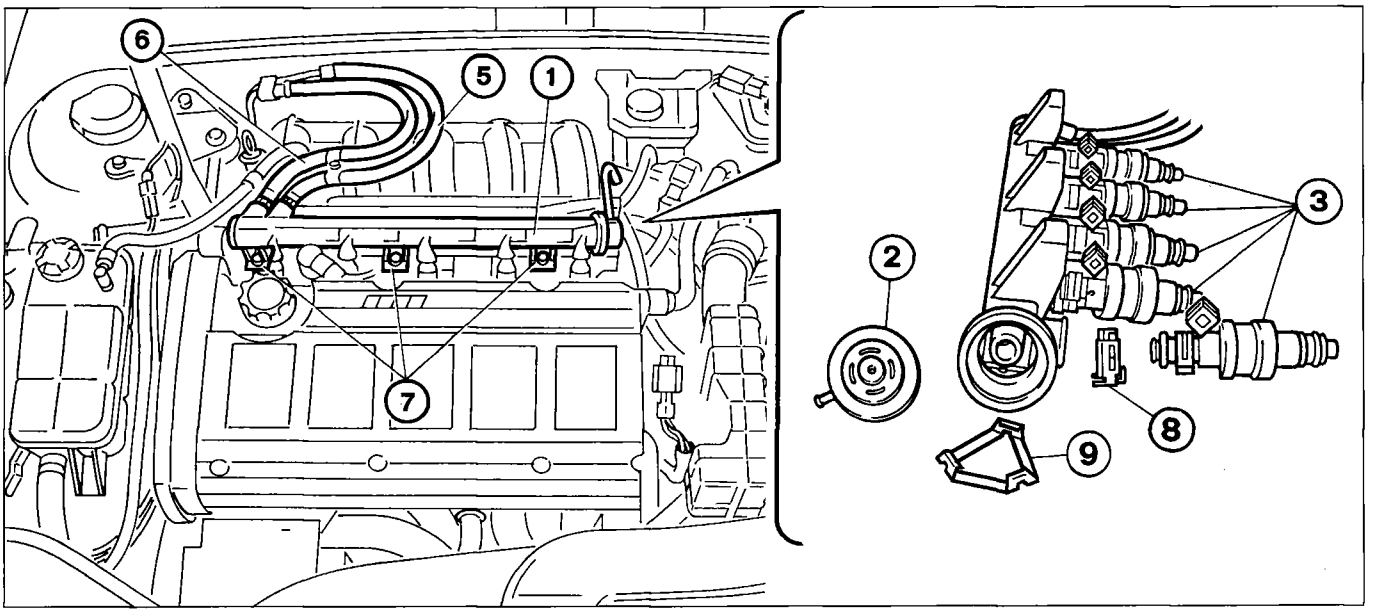

P4F41DJ02

Proceed as follows:

- Disconnect the fuel supply pipe (5) from the connector.
- Loosen the band for the return pipe and disconnect the flexible rubber pipe from the rigid pipe.
- Disconnect the electrical connectors from the injectors.
- Undo the fixing bolts (7).
- Extract the injector manifold assembly.
- To remove the injectors from the fuel manifold, remove the clip (9).

1. Fuel manifold
2. Fuel pressure regulator
3. Injectors
4. Vaccum intake from engine inlet manifold
5. Fuel supply pipe from electric pump
6. Fuel return pipe to the tank
7. Bolts fixing fuel manifold and injectors
8. Pressure regulator clip on fuel manifold
9. Injector clip on fuel manifold

Copyright by Fiat Auto

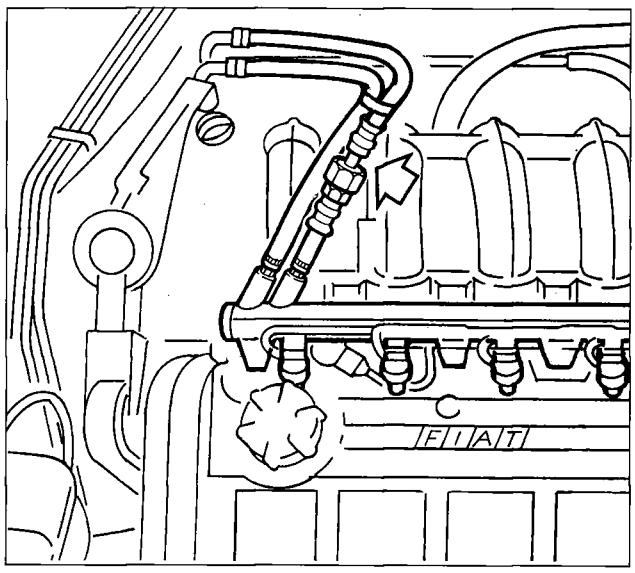

P4F42DJ01

CHECKS ON THE FUEL SUPPLY CIRCUIT

1st Test

Checking fuel regulation pressure

- Disconnect the fuel supply pipe to the manifold from theconnector shown by the arrow;
- Position pressure gauge 1895890000 with both taps A and B open between the end of the disconnected pipe and the fuel manifold;

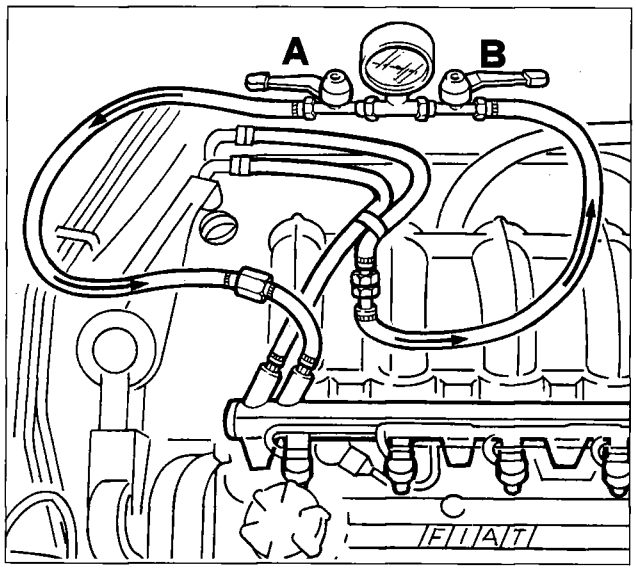

P4F42DJ02

- operate the electric fuel pump with the engine switched off using the Fiat/Lancia Tester activating the "fuel pump" test;
- the pressure reading on the gauge should stabilize in these test conditions at around 3 bar. If the pressure is too low, carry out the 2nd test.

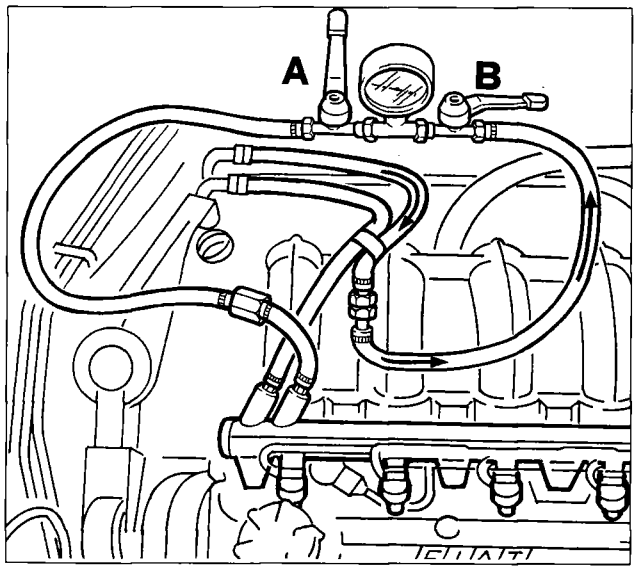

P4F42DJ03

2nd Test

Checking maximum fuel supply pressure (or electric pump efficiency)

The same connections as for the previous test apply.

- Close fuel tap control lever A (downstream of the pressure gauge);
- operate the electric pump with the engine switched off, as described in the previous test: the pressure should reach 6 bar and not exceed 7.5 bar (pump safety valve setting). If this is not the case, replace the electric pump because it is defective.

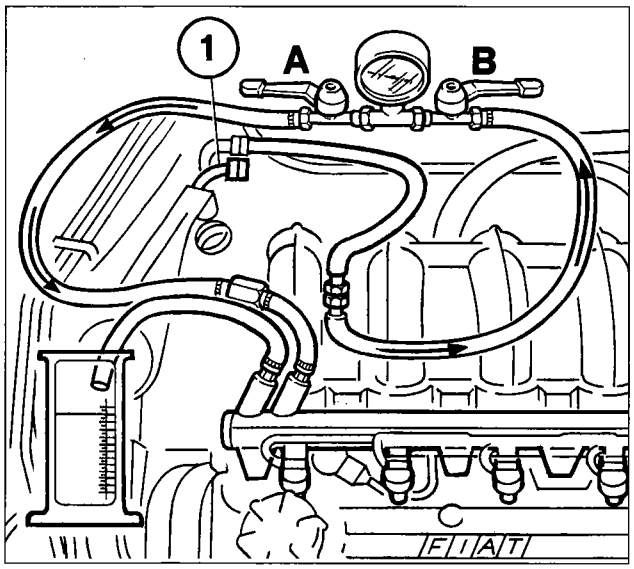

If in the 1st test (see previous page) the pressure measured exceeded three bar, then it is necessary to:
- disconnect the fuel return pipe (at the connection point (1) with the rigig fuel return pipe to the electric pump) and place it in a suitable container for collecting the fuel.
- place both taps A and B in the open position;
- operate the electric pump with the engine switched off, as described on the previous page, then read the pressure value on the gauge:
  a. if it reaches 3 bar, then the fuel return pipe to the tank should be checked because it is obstructed or bent;
  b. if it exceeds 3 bar, then the pressure regulator should be replaced because it is defective.

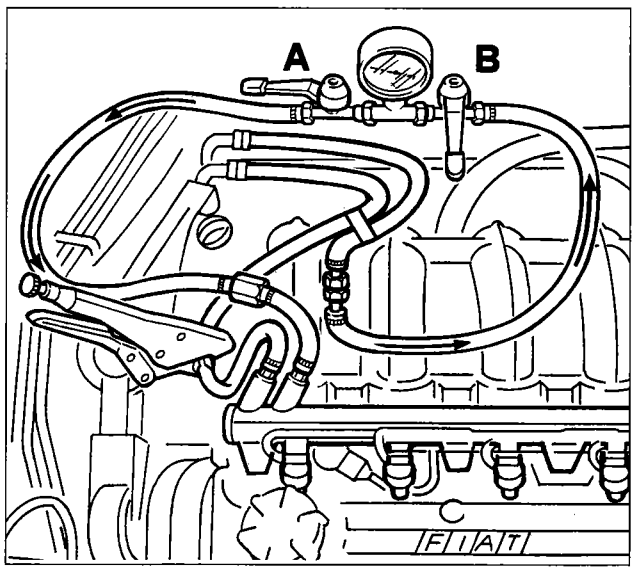

3rd Test

Injector seal check

To check whether the injectors are dripping, simply implement the connection for the 1st test (checking regulation pressure), then operate the electric pump with the engine switched off. When the regulation pressure is reached, close control lever B and, at the same time, restrict the fuel return pipe to the tank; use pliers to do this to avoid damaging the pipe.
This operation is necessary to distinguish between a real leak at the injectors and an imperfect seal of the fuel pressure regulator flow valve.

Then:
- switch off the electric pump;
- observe whether, as soon as it stabilizes (i.e. decreases slightly) the pressure remains constant for about 60 seconds.

If this is not the case, there is a leak from one or more injectors or one of the connectors.
- In such a case, remove the fuel manifold from the inlet manifold, maintaining the connection with the pressure gauge.
- Repeat the previous test leaving the pressure gauge tap open.
- After having operated the electric pump with the engine switched off, visually inspect whether there are drips from any of the injectors or connections.

Replace any dripping injector and/or renew the defective seal for the connection which is leaking.

Copyright by Fiat Auto

REMOVING-REFITTING FUEL TANK

For the procedure for removing-refitting the fuel tank, refer to the Fuel System section for the 1581 16V version, with the difference being that there are two fuel vapour recirculation pipes to be disconnected (see also the "fuel anti-evaporation circuit diagram" at the start of this section).

CHECKING ENGINE IDLE SPEED

If the engine idle speed is not 750 ± 50 rpm and the injection/ignition control unit is the self-adjusting type, then it is not possible to carry out any adjustment, therefore it is necessary to check that the accelerator linkage is correctly adjusted and the fault should be sought through a complete fault diagnosis with the Fiat/Lancia Tester.

CHECKING CONCENTRATION OF POLLUTANT EMISSIONS

By means of the self-adjustment of the system, the Motronic M 2.10.4 ensures a constant check of the idle speed and the CO percentage, thereby making any external adjustment superfluous (there are no longer any adjustment screws). However, a check on the exhaust gas content, downstream of the catalyzer, can provide precious information concerning the operationof the injection/ignition system, the engine parameters and the catalyzer.

Checking idle concentration of CO and HC upstream of the catalytic silencer

To check the concentration of carbon monoxide (CO) and unburnt hydrocarbons (HC) upstream of the catalyzer, proceed as follows:

1. Undo the cap or the nut on the exhaust pipe upstream of the catalyzer and tighten the tool in its place.
2. Connect a suitably calibrated CO tester to the tool.
3. Start up the engine and let it reach operating temperature.
4. Check that the engine speed is as planned.
5. Check that the idle concentration of CO is within the recommended values given in the table overleaf; if this is not the case, it is necessary to check:
   - that the Lambda sensor is working properly, using the Fiat/Lancia Tester;
   - for the presence of air penetration in the area surrounding the Lambda sensor housing;
   - the injection system and ignition (**in particular the state of wear of the spark plugs**).
6. In the same conditions, check that the concentration of HC is not below 600 p.p.m.
7. If the above values are not found, proceed to check the engine paying particular attention to: the ignition advance angle - the valve clearances - the valve gear timing - the engine compression.
   - the ignition advance angle;
   - the valve clearances;
   - the valve gear timing;
   - the engine compression.

Checking exhaust concentration of CO and HC

The exhaust concetration of carbon monoxide (CO) and unburnt hydrocarbons (HC) is carried out by inserted a suitably calibrated CO tester at least 30 cm into the end section of the exhaust pipe as shown in the diagram.

If the shape of the end section of the exhaust pipe is such that the sensor cannot be fully introduced, then it is necessary to add a special extension pipe which ensures the seal in the join area.

1. Check that the CO and HC idle concentration values are those recommended in the table.
2. If the HC value is outside the recommended limit, whilst that measured previously upstream of the catalyzer was correct, then the engine parameters are thought to be correct and the cause of the problem should be sought in the decreased efficiency of the catalyzer.

Table of pollutant emission tolerance figures

	CO (%)	HC (p.p.m.)	CO_2 (%)
Upstream of the catalyzer	0,4 ÷ 1	600	⩾12
Downstream of the catalyzer	⩽0,35	⩽90	⩾13

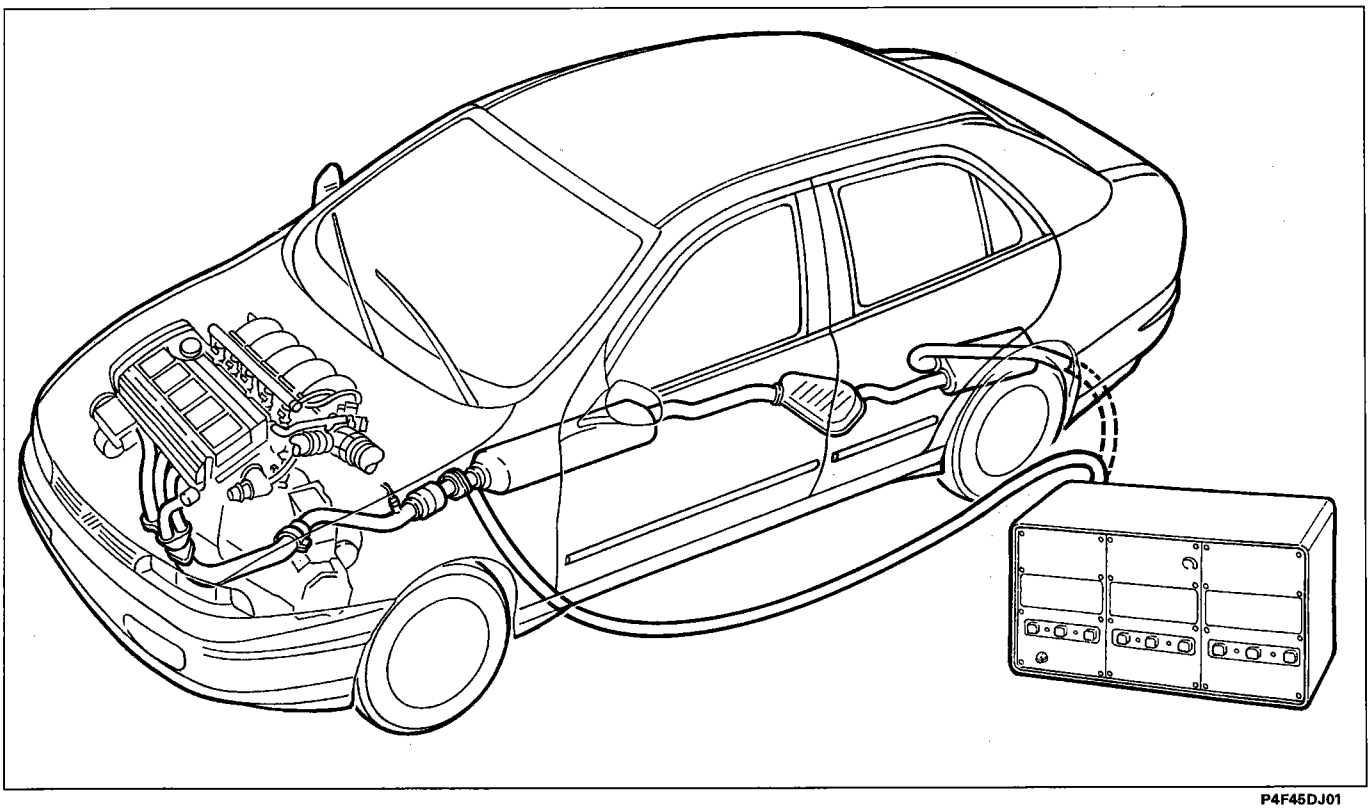

P4F45DJ01

10.

DIAGNOSIS

The complete fault diagnosis of the system is possible through active dialogue with the Fiat/Lancia Tester
If a failure is detected at the sensors, the electronic control unit replaces the information coming from the faulty sensor with information memorized previously (recovery) to allow the continued operation of the engine. The detection of the fault involves it being permanently memorized and the exclusion of the sensor from the system until the system is compatible once again.
The same procedure is applied if the fault involves an actuator or its operation. The identificaation of the fault and its replacement with recovery data involves the fault being signalled by the specific warning light in the instrument panel coming on.
The following parameters can, in the case of a fault, be managed by the control unit: flow meter, idle adjustment actuator, coolant temperature sensor, butterfly valve position sensor, Lambda sensor, air temperature sensor, battery voltage and detonation sensors. In the case of problems at the control unit, the timing sensor or the injectors, the system does not identify the fault and the vehicle stops. On request of the operator, the faults can be read at the control unit using the Fiat/Lancia Tester.

Identifying faults

This is carried out during the basic function through which the sensor/actuator is managed.

Memorizing the error and structure of the errors memory

The errors are memorized in the control unit in the order in which they arrive in the RAMs. For each them the location and the type of error are memorized, plus 2 environmental conditions (specific for each type of fault) measured the moment the fault is identified, and a frequency counter.

Classification of the defect

If a defect is recognized for the first time and the error state persists for a time t > 0.5s, then the defect is memorized as "permanent". If this defect later disappears, it is memorized as "intermittent" and "not present". If it later reappears, it is memorized as "intermittent", but becomes "present".
The classification of a fault as "permanent" activates the recovery functions; when the fault disappears, the normal reading or implementation function is restored.
Several types of fault are classified as "important", in other words in terms of the pollution control regulations. The presence of these faults is signalled to the user by the failure warning light in the instrument panel coming on.

Frequency counter

Each errros is allocated a frequency counter, which is used to determine the moment at which a fault no longer present was memorized. The first time the fault is detected, the counter is set at 10. If the fault disappears, the counter remains at the current value. If it reappears, then it is increased by 1 (with an upper limit of 50).
The counter is decreased each time the engine is started up and the fault has not reappeared. If the counter reaches zero, then the fault is automatically cancelled from the memory.
If, after having decreased the counter, the fault reappears, then the counter is returned to the value of 10 (if, however, it was already above 10, it is not altered).

Signalling a failure

The failure warning light comes on when there is a defect memorized as "present" and "important".
The delay time between detecting the fault and the warning light coming on is 0.1 seconds; the delay time between the fault disappearing in the memory and the warning light going out is 4 seconds.
The warning light comes on each time the ignition is turned to the ON position. If there are "important" faults already present, then the warning light goes out after 4 seconds.

Cancelling the error

When the frequency counter reaches the value 0, the fault and the associated parameters are cancelled. The immediate cancelling of the entire errors memory takes place in the following cases:
- by means of the "cancel errors memory" command sent by the tester;
- by interrupting the control unit supply (disconnecting the battery or the control unit connector).

Fault diagnosis with the Fiat/Lancia Tester

The diagnostic socket to which the Fiat/Lancia TESTER is connected is located on the right hand side of the engine compartment (near the oil dip stick).
The exchange of data between the control unit and the Tester takes place via a two direction serial line (line K) using the standard Bosch communication protocol.
The Tester can supply the following information:
- display of the errors;
- display of the engine parameters;
- active diagnosis

List of errors

Rpm sensor	Loss of signals
Butterfly potentiometer	C.C.
Air temperature sensor	C.C.
Coolant temperature sensor	C.A-C.C.
Battery	Supply> 16.01V. Supply< 10V.
Lambda sensor	C.A-C.C.- Incorrect CO value
Injector	C.C
Idle speed actuator	C.C.
Petrol vapour solenoid valve	C.C.
Relays/actuators	C.C.
Control unit	Operating faults for the microprocessor or the control unit memories are signalled.
Flow meter	C.C.
Timing sensor	Signal absent or not plausible
Detonation sensor	Signal absent or not plausible
Speedometer sensor	Signal absent or not plausible
Phase transformer	C.C.
Electric fuel pump	C.C.
Fiat CODE	Code not recognized or not received

Copyright by Fiat Auto

Parameters displayed

Engine rpm
Injection time
Advance
Intake air temperature
Coolant temperature
Butterfly valve opening angle
Battery voltage
Lambda sensor
Self-adjustment
Flow meter
Knocking (detonation)
Vehicle speed
Petrol vapour cut out solenoid valve
Fiat CODE
Mileage covered

Active diagnosis

The following tests can be activated using the Fiat/Lancia Tester:
- Phase transformer
- Injector
- Failure warning light
- Petrol vapour solenoid valve
- Air conditioning
- Idle speed actuator
- Cancelling errors.

Recovery

In the case of failures at the sensors, the control unit replaces the value transmitted by the sensor with a value known as the Recovery value which, depending on the different faults, is either memorized in the control unit or reconstructed specially using other available information in order to allow the vehicle to reache a service centre.
This value is also transmitted to the Fiat/Lancia Tester, therefore, during the fault diagnosis it is worth bearing in mind that in the case of problems, the Fiat/Lancia Tester will signal the error for the sensor concerned and the Recovery value will appear on the display.

Permanent memory

The control unit is equipped with a «permanent» type memory (EEPROM), which preserves the indication of the error even when the cause no longer exists and the ignition is switched OFF; and a «volatile» type memory (RAM) which loses the information concerning the error as soon as the cause ceases.
This also makes it possible to identify errors of an occasional nature more effectively.
Before ending the fault diagnosis, the contents of the «permanent» memory should be cancelled using the Fiat/Lancia Tester in Active diagnosis.

The contents of the «permanent» errors memory can be cancelled in the following ways:

1 - Using the Fiat/Lancia Tester in active diagnosis.

If this is not the case, when the Fiat/Lancia Tester is reconnected, the errors already examined will be signalled.

2 - If the cause of the error is no longer present and the engine has been started up 5 times (running for at least 20 minutes) with a gap of at least 2 minutes between one time the engine is started up and the next.

Disconnecting the control unit from the system, even for very long periods, does not cancel the contents of the «permanent» memory.

FUEL SYSTEM

	page
Fuel system with Lucas FT09 pump	1
- Introduction	1
- Description of the fuel system	1
- Location of fuel system components	2
- Air intake circuit	3
- Fuel supply circuit	4
Fuel injection pump	5
- Principle of operation	6
- Diagram of fuel circuit	7
- Flow supplement	8
- Adjusting fuel injection advance	9
- Transfer pump	9
- Transfer pump regulating valve	10
- Hydraulic head	11
- Cam ring	11
- High-pressure delivery valve	12
- Cut-off solenoid	12
- Turbocharging control valve	13
- Speed regulator	14
Electrical-electronic circuit	15
- Electronic control unit	15
- Management of injection advance	16
- Management of fast idle	16
- Management of ex. gas recirculation	17
- Management of air conditioning system	17
- Management of heater plug pre/post -heating	18
- Instrumented fuel injector	18
- Input and output signals to/from control unit/sensors and actuators	19
- Wiring diagram	20
- Engine rpm sensor and phonic wheel	21
- Air flowmeter	22
- Coolant temperature sensor	23
- Preheating control unit	24
- Air temperature sensor	24
- Diagram of recirculation of gases from crankcase (blow-by)	25
- Burnt gas recirculation system (E.G.R.)	26
Removing-refitting fuel injection pump	27

Copyright Fiat Auto

COPYRIGHT Fiat Auto S.p.A.

Total or partial reproduction of the text or illustrations is forbidden.

The information in this publication is intended as a guide and could be superseded as a result of modifications adopted by the Manufacturer at any time due to technical and commercial reasons and in accordance with local regulations.

Fiat Auto S.p.A.

D.M.C. - M.P.S.
Servizi Post Vendita - Assistenza Tecnica
10040 Volvera TO - (Italia) - Largo Senatore G. Agnelli, 5
Print no. 506.763/02 – Agosto 1996 - 750
Printed in Italy - Tip. Pozzo Gros Monti - Moncalieri (TO)
N. ordinazione 60444763

FUEL SYSTEM WITH LUCAS FT09 PUMP

INTRODUCTION

The fuel injection consists of a set of devices which insert fuel into each cylinder, metering the necessary quantity to obtain regular and effective combustion.

The correct operation of the engine largely depends on correct fuel injection.

The essential conditions to be met are:

- to supply for each cylinder and for each cycle the quantity of fuel required by the engine depending on the speed of rotation and load, thus metering the fuel;
- to insert the fuel at the most appropriate moment, repeating the start of fuel injection always at the same point of the cycle, selected in order to be as close as possible to the engine's ideal operating cycle; it must be possible to change this instant in accordance with the speed of rotation;
- to atomize the fuel, dividing it into very fine droplets, to facilitate its ignition;
- to give the droplets sufficient kinetic energy to penetrate into the mass of compressed air;
- to diffuse the fuel particles as evenly as possible in all directions, so that as much as possible of the air enclosed in the cylinder may be used for combustion.

The main features of the fuel system on the 1910 TD indirect fuel injection engine are as follows:

- management of the fuel injection advance assigned to an electronic control unit (ECU);
- turbocharging by turbo blower and air/air heat exchanger;
- cross-flow inlet/exhaust pipes;
- exhaust gas recirculation system (EGR) for reducing nitrogen oxides (NOx);
- crankcase vapour recirculation system (blow-by).

These devices allow the engine to meet the limits of the CEE F2 standard, also ensuring greater economy of operation, reduced engine noise and improved driveability of the car.

DESCRIPTION OF THE FUEL SYSTEM

The fuel system may be divided into the following sub-systems:

- Air intake circuit
- Fuel supply circuit
- Electrical/electronic circuit
- Circuit for recirculation of crankcase vapours (blow-by)
- Circuit for recirculation of burnt gases (E.G.R.)

Copyright Fiat Auto

LOCATION OF FUEL SYSTEM COMPONENTS

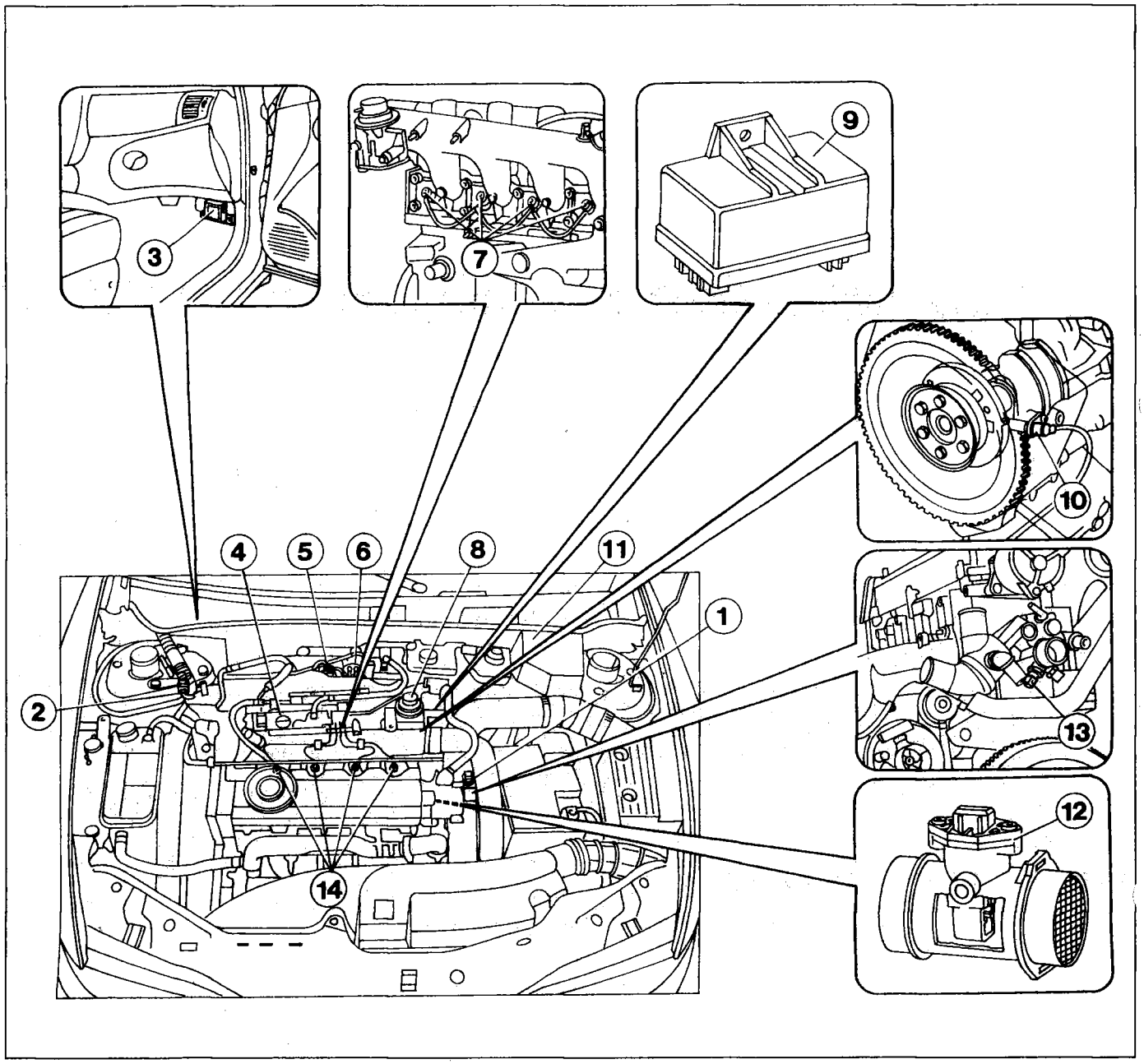

1. Air temperature sensor
2. Diagnostic socket
3. Electronic control unit
4. Injection pump
5. Fast idle solenoid
6. Borg Warner modulating valve
7. Heater plugs
8. E.G.R. valve
9. Preheating control unit
10. Rpm sensor
11. Preheating control unit fuse
12. Air flowmeter
13. Coolant temperature sensor
14. Fuel injectors

AIR INTAKE CIRCUIT

The air intake circuit is turbocharged by a Garret GT15 turbocharger with self-regulating pressure valve (Waste-gate) and maximum supply pressure of 1.05 bar.

The air is drawn in through the intake (1) and, after passing through the filter (5), it is compressed by the turbocharger (2) which is driven by the exhaust gases; the air then passes through the heat exchanger (intercooler) (3).

The air flow thus assumes optimum temperature and density values and reaches the inlet manifold (7) from which it is distributed to the cylinders.

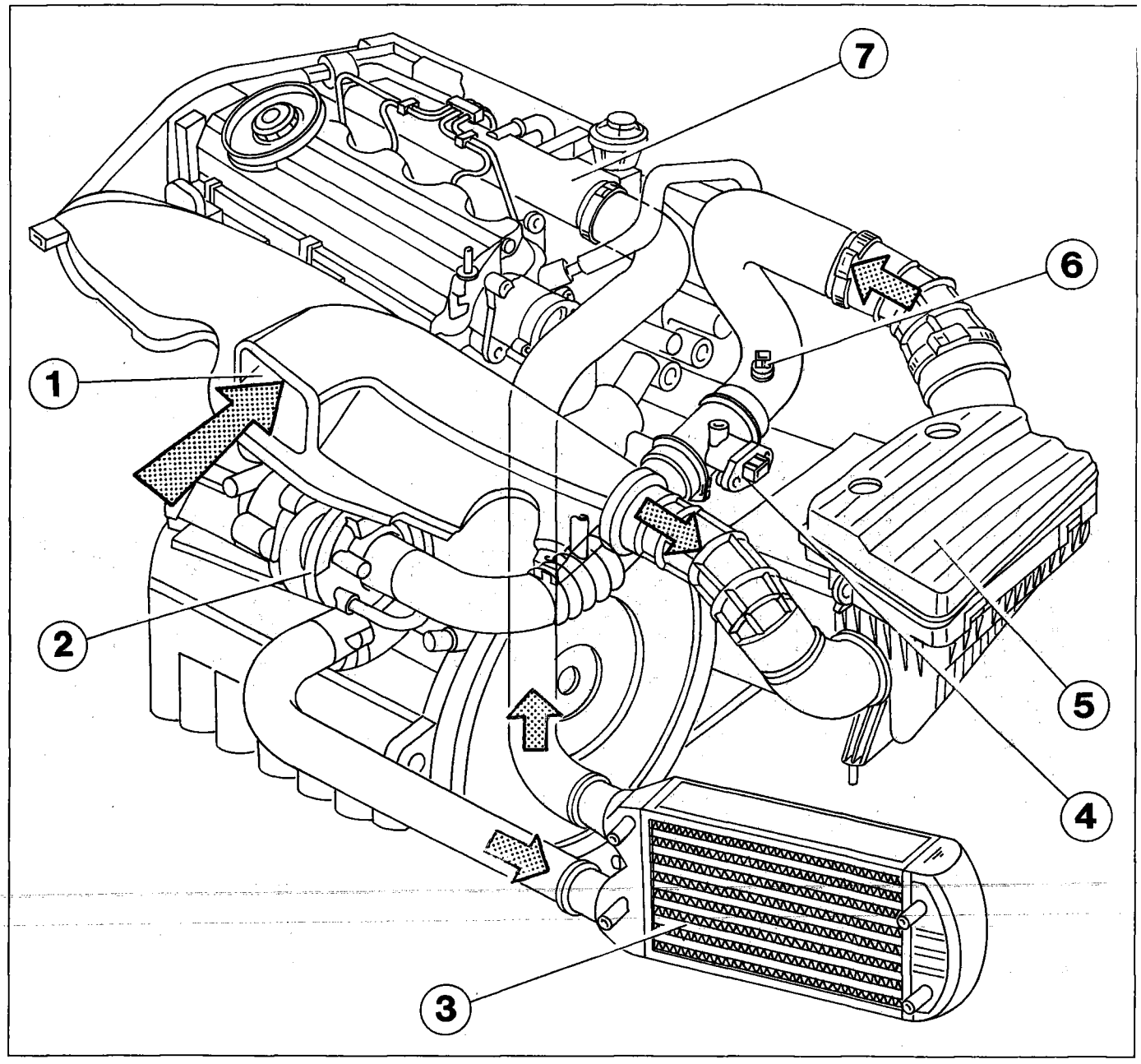

P4F03EJ01

1. Intake
2. Turbocharger
3. Heat exchanger (intercooler)
4. Air flowmeter
5. Air cleaner
6. Air temperature sensor
7. Inlet manifold

Copyright Fiat Auto

10.

FUEL SUPPLY CIRCUIT

The main components of the fuel system are: fuel tank, filter, injection pump and fuel injectors.

The fuel flows from the tank (6) to the injection pump(2) passing through the filter (7).

The injection pump (2), of the rotary type, ensures that the fuel injectors (1) are supplied correctly in the injection order 1-3-4-2.

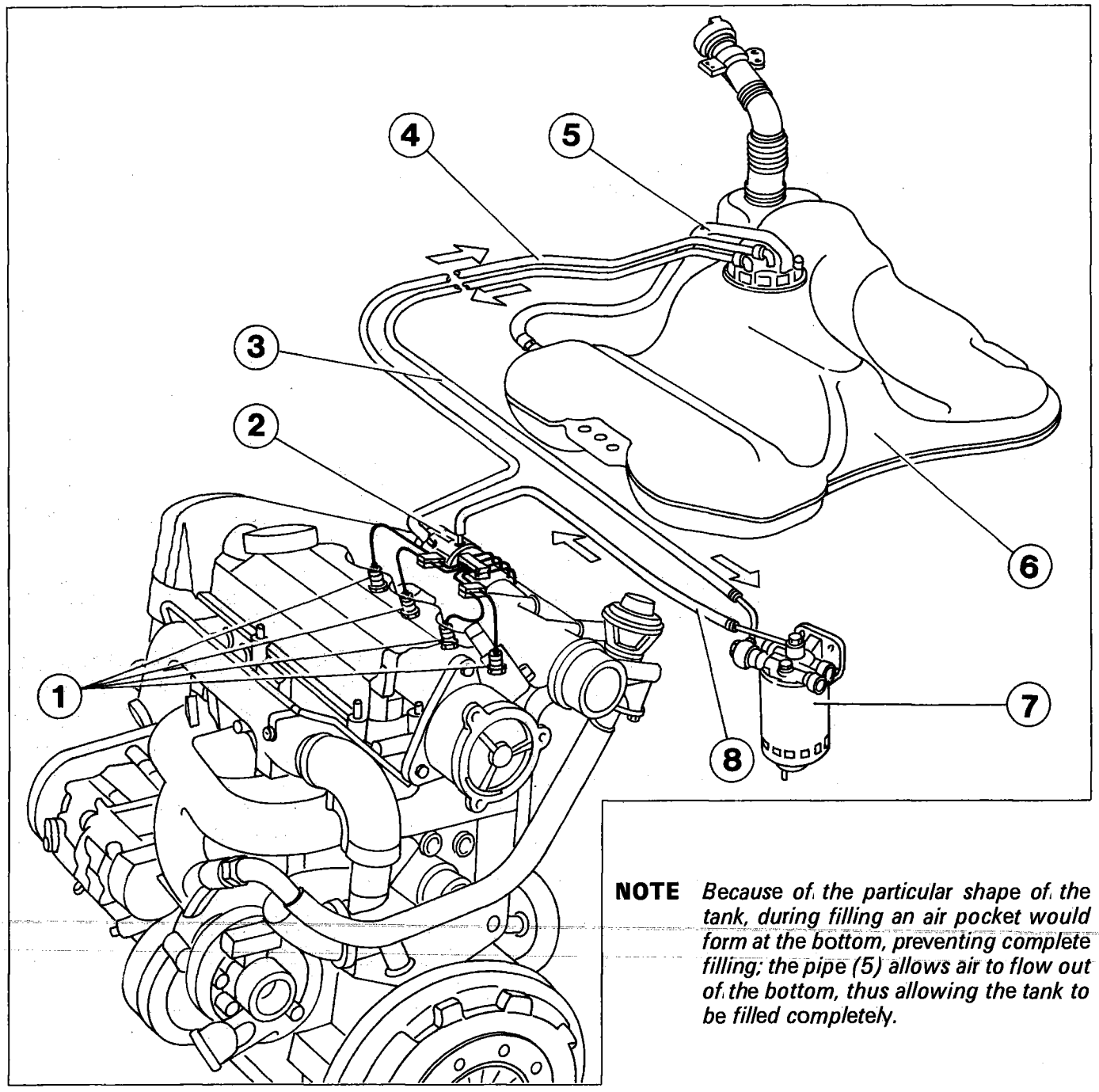

NOTE *Because of the particular shape of the tank, during filling an air pocket would form at the bottom, preventing complete filling; the pipe (5) allows air to flow out of the bottom, thus allowing the tank to be filled completely.*

P4F04EJ01

1. Fuel injectors
2. Injection pump
3. Delivery pipe from tank to filter
4. Return pipe
5. Vent pipe
6. Fuel tank
7. Fuel filter
8. Fuel delivery pipe from filter to injection pump

FUEL INJECTION PUMP

The Lucas FT09 fuel injection pump is specific to indirect injection diesel engines, with specific innovations which optimize the operating characteristics of the engine under all operating conditions; in particular, it permits a reduction in fuel consumption, harmful emissions and noise.
The function of the fuel pump is to precisely meter the quantity of fuel and to inject it at high pressure into the combustion chamber of each cylinder at a precise moment of the engine's cycle; the quantity of metered fuel is then atomized at high pressure by the fuel injector.
It is essential for the injection pump to operate accurately and reliably, as the cycle is repeated thousands of times a minute; thus no variations in the injection point (advance) or the quantity of fuel injected (metering) are admissible throughout the life of the engine.
The injection pump is characterized by rather small overall dimensions; it is of the rotary distributor type, its structure is so compact and it does not require any system of external lubrication as it is lubricated by the filtered diesel which saturates it continuously during operation.
The internal pressure prevents infiltration of dust, water or other foreign bodies harmful to its operation, in addition the particular design of the hydraulic circuits prevents the accumulation of air.
To facilitate both starting and delivery of full power, irrespective of climatic conditions, the pump has an automatic system for supplementing the flow rate which increases the quantity of fuel injected.
The pump consists of a single pumping element, comprising two pistons opposite each other, which is an integral part of the distribution impeller. The impeller rotates inside a unit called the hydraulic head. The piston contacts the inner lobes of a cam ring by means of a unit consisting of a roller and roller carrier shoe.
The adoption of a single pumping element ensures that fuel is delivered evenly to each cylinder, and eliminates balancing of deliveries which is absolutely essential in all pumps comprising separate pumping elements.
The fuel, accurately metered during insertion in the pumping element, is distributed to each injector at the correct moment thanks to a system of passages in the hydraulic head and impeller.
On a command from the electronic control unit the pump can vary the injection advance and can therefore adjust the point of commencement of injection in the engine cycle, so that it takes place at the optimum moment in all operating conditions.

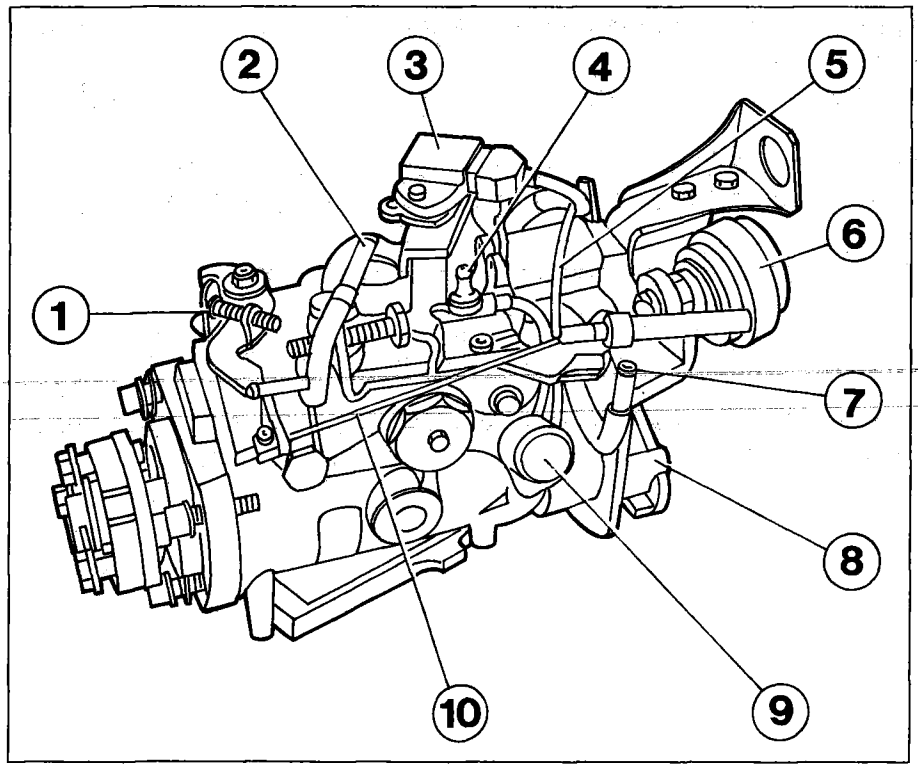

P4F05EJ01

The pump also has a centrifugal mechanical regulator for accurately checking the engine speed.

1. Idle adjustment screw
2. Connection for diesel return pipe to tank
3. Throttle lever position sensor
4. Throttle lever
5. Electrostop valve tamper-proof cover
6. Fast idle device
7. Connection for diesel delivery pipe from filter
8. Connection for diesel delivery pipe to the injectors
9. Advance actuator
10. Fast idle control cable

Copyright Fiat Auto

Principle of operation

The fuel, drawn from the tank (11) and filtered through the filter (12), reaches the transfer pump (7) which further increases the fuel pressure.

This pressure, regulated by the transfer pump pressure regulating valve, increases in a fairly linear manner as the engine rpm increases.

The valve (2) also bypasses the transfer pump (7) during priming.

From the transfer pump, the fuel reachers the meter (6) which determines the quantity of fuel to be sent to the pumping element (4) and thus the correct injector flow rate.

The position of the meter (6) is controlled by the speed regulator (13) and depends on the position of the accelerator pedal.

The pumping element consists of two pistons opposite each other, which slide radially in the impeller and are operated, via rollers and sliding shoes, by the profile of a cam ring.

The pistons have no return springs, as they are pushed outwards by centrifugal force and the pressure of the entering fuel in the fuel supply stage.

The rollers which drive the pistons come into contact with the profile of the cam at different points depending on whether more or less travel has been executed during the fuel supply stage.

This travel is dependent on the quantity of fuel which enters into the pumping chamber, regulated by the meter and the expansion time of the pumping pistons, given by the speed of rotation of the pump.

During the fuel injection stage, the piston control rollers come into contact with the cams on the cam ring, and the pistons are pushed inwards causing an increase in pressure and so the injection of fuel.

At the end of the injection stage, the pistons are pushed outwards, the pressure falls, fuel is no longer delivered and the valve (5) closes the delivery pipe.

In addition to closing the delivery pipe, the valve (5) instantaneously lowers the pressure in the pipe communicating with the injector (10) and so promptly interrupts injection, to prevent the injector dripping.

The maximum quantity of fuel that can be inserted into the pumping element (4) at each cycle is determined by a maximum flow rate regulator.

The pressure in the pumping element (4) is kept at a constant value of the pressurization valve (9).

The solenoid (8), driven by the electronic control unit, allows the advance of commencement of pump delivery to be varied so as to increase it when the engine load exceeds a particular threshold.

The engine cut-off solenoid (electrostop) (3) is protected by a tamper-proof cover.

During engine operation, the solenoid remains energized, allowing fuel to pass from the transfer pump (7) to the supply pipe.

When the key is turned to switch off the engine, the solenoid is de-energized, cutting off the passage of fuel; the fuel supply chamber of the meter is no longer supplied and the engine is turned off.

DIAGRAM OF FUEL CIRCUIT

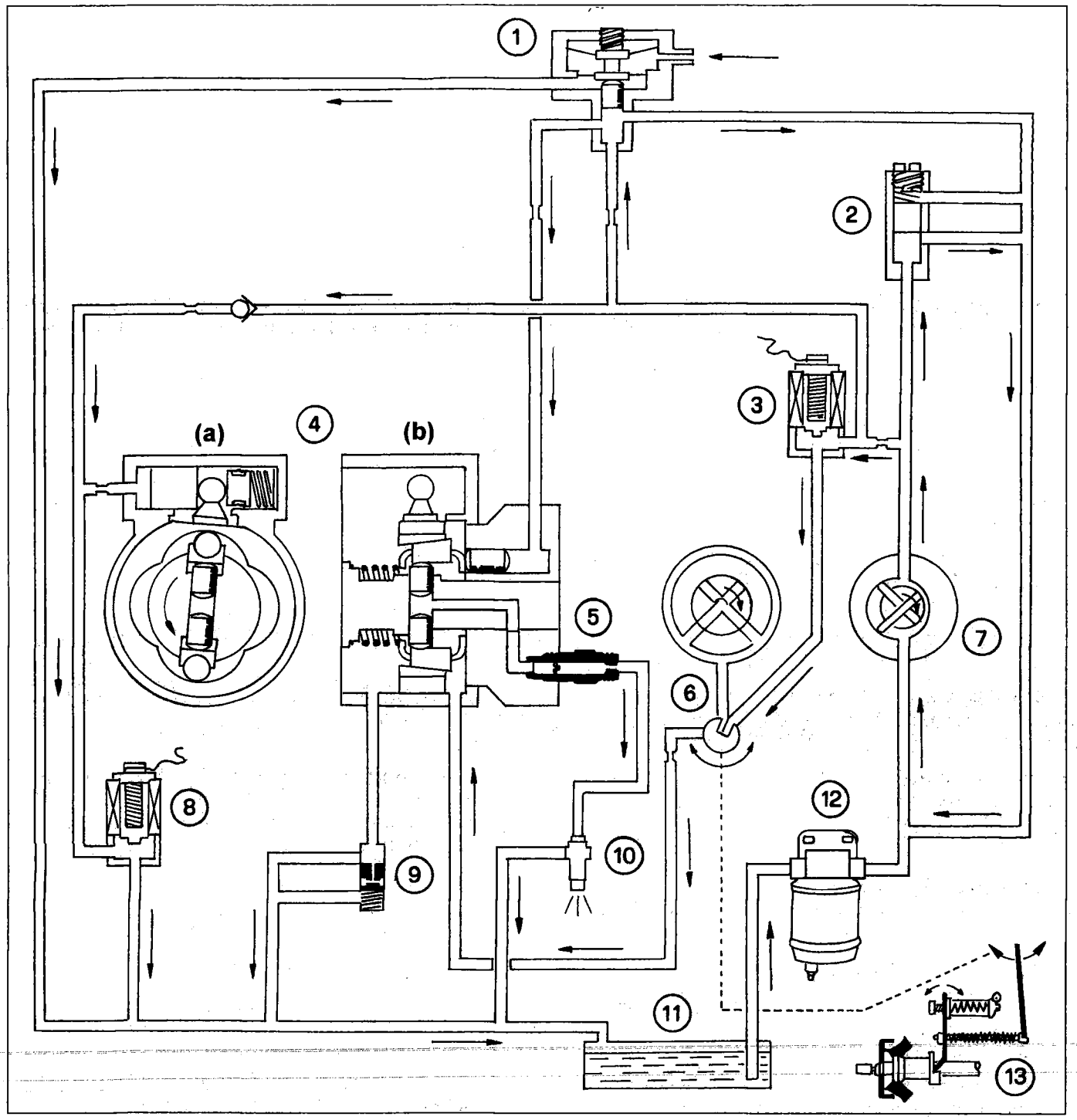

P4F07EJ01

1. Turbocharging control valve
2. Transfer pressure regulating valve
3. Engine cut-off solenoid (Elettrostop)
4. Pumping element
   (a) view of front section
   (b) view of side section
5. Delivery valve
6. Meter
7. Transfer pump
8. Advance actuator solenoid
9. Pressurization valve
10. Injectors
11. Tank
12. Filter
13. Speed regulator

Copyright Fiat Auto

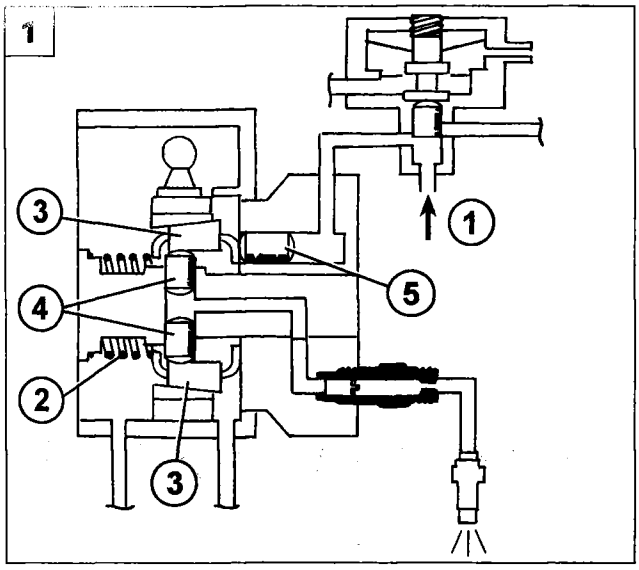

P4F08EJ01

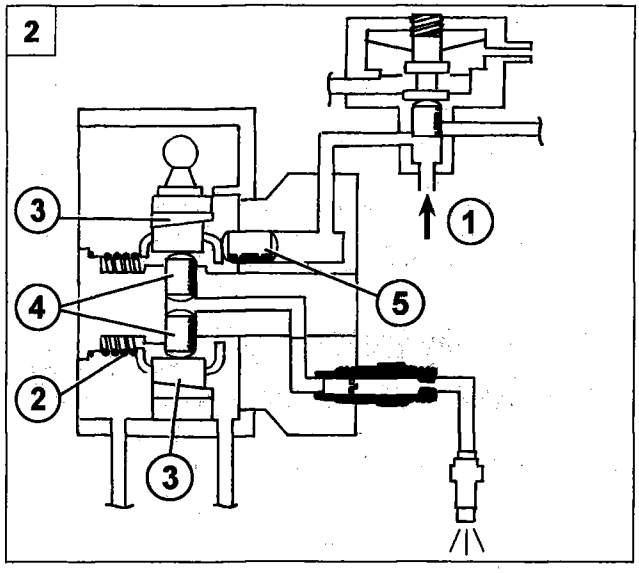

P4F08EJ02

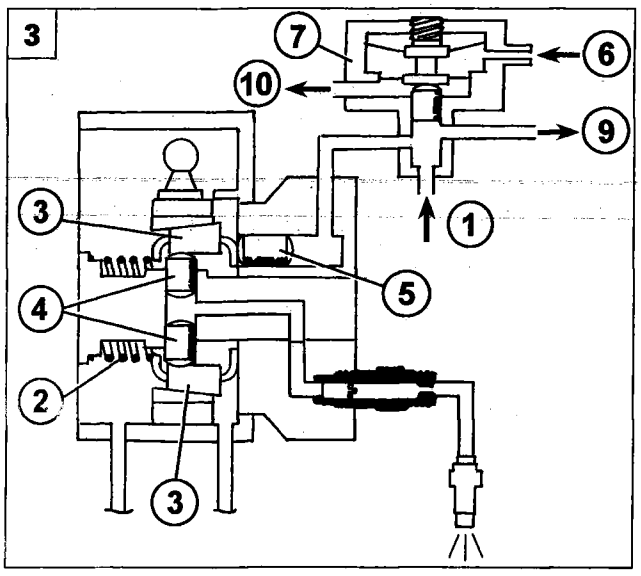

P4F08EJ03

Flow supplement

To facilitate both engine starting and delivery of full power, there is a system which, by varying the travel of the pumping element pistons, allows the maximum flow rate of the fuel to be increased.
In particular there are the following three operating modes:

1) Operation during starting

During engine starting, the inlet transfer pressure (1) is relatively low, i.e. it allows the spring (2) to overcome the force exerted by the pistons (5) and to extend, so moving the sliding shoes (3) outwards.

In this condition the pistons (4) are in contact with the shorter side of the shoes (3), thus increasing the travel and so also the maximum flow rate.

2) Operation with turbocharger not on

During normal operation, the inlet transfer pressure (1) is higher than the counteracting force exerted by the spring (2), and this allows the pistons (5) to move the sliding shoes (3) inwards.

In this way the pistons (4) are in contact with the longer side of the shoes (3), thus reducing the travel and so the value of the maximum flow rate.

3) Operation with turbocharger on

Switching the turbocharger on causes an input pressure (6) into the control valve (7) which causes an internal piston to move, thus allowing the transfer pressure input pipe (8) to communicate with the return pipes (9 and 10).

The reduction in pressure on the piston (5) allows the spring (2) to overcome the pressure of the inlet fuel (1).

The extension of the spring (2) causes the shoes (3) to move, thus increasing the travel of the pistons (4) and the fuel flow rate.

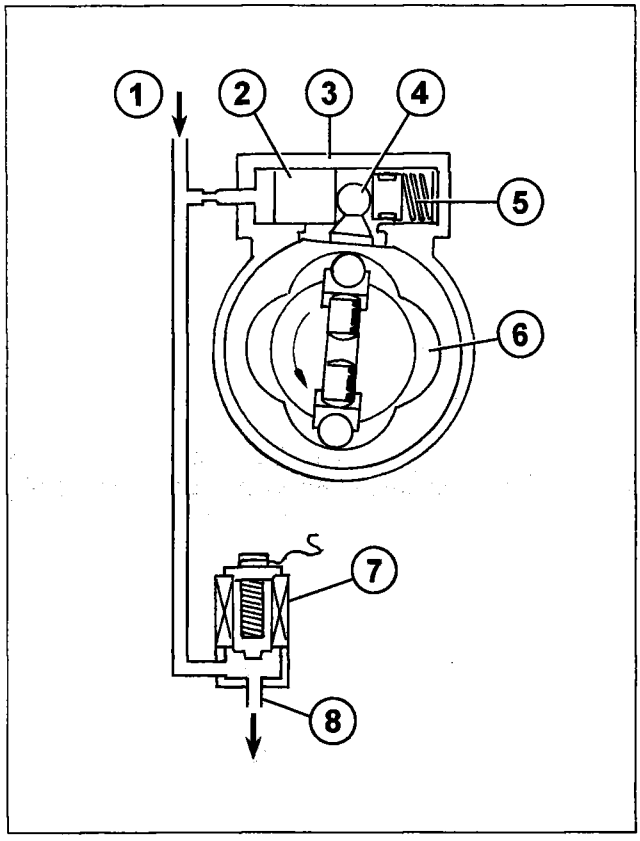

P4F09EJ01

1. Fuel inlet
2. Piston
3. Cylinder
4. Pin
5. Spring
6. Cam ring
7. Solenoid
8. Fuel outlet

Adjusting injection advance

The injection advance adjustment system allows the point of commencement of injection to be varied so that it takes place at the optimum moment during all engine operating conditions.
The system consists of a piston (2) sliding in the cylinder (3) and counteracted by the spring (5).
The piston is connected, via the spherical--headed threaded pin (4), to the cam ring (6).

If the solenoid (7) is not activated, the transfer pressure (1), acting on the piston (2), moves the piston overcoming the resistance of the spring (5) and, through the pin (4), causes the cam ring (6) to rotate in relation to the pump drive shaft towards the position of maximum advance.

The activation of the solenoid (7) allows the fuel to flow towards the fuel tank through the return pipe (8). This causes a reduction in the pressure acting on the piston (2) allowing the spring (5) to extend fully and, through the pin (4), to rotate the cam ring towards the position of minimum advance.

In this way the electronic control unit, varying the open-close frequency of the solenoid (7), modulates the pressure acting on the piston (2), thus continuously regulating the point of commencement of injection.

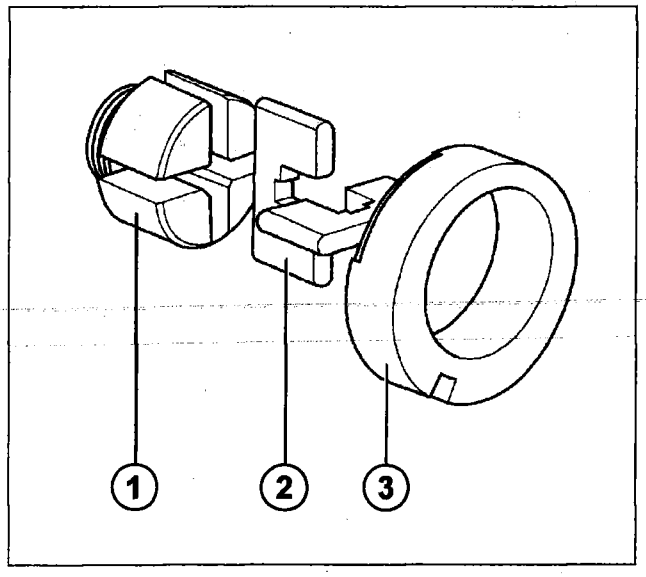

P4F09EJ02

1. Transfer pump impeller
2. Brushes
3. Elliptical ring

Transfer pump

The transfer pump, which is of the positive-displacement type (intake and pressurization), consists of an impeller (1), an elliptical ring (3) and two rigid brushes (2).

During rotation, the brushes (2) slide in the impeller (1) following the profile of the elliptical ring (3), which is offset in relation to the rotor. As the volume in the chamber increases, upstream of the brush a vacuum forms which results in fuel being drawn in from the tank; downstream of the impeller the volume decreases and so fuel is sent under pressure into the circuit.

Copyright Fiat Auto

10.

Transfer pump regulating valve

The transfer pump regulating valve is housed in the hydraulic head, and has three separate functions:

- it creates the transfer pressure;
- it checks this pressure, maintaining a specific relationship between the transfer pressure and rotation speed;
- it pressurizes the fuel metering circuit whenever it is necessary.

The regulating valve consists of a valve casing (4) containing a piston (2) and spring (3).

The force applied by the spring (3) can be adjusted by an outer screw (5), and is counteracted by another spring (1) which holds the piston (2) in its initial position.
When the speed of rotation of the transfer pump is increased, the flow rate increases and so does the pressure acting on the piston (2).
The piston (2) moves, compressing the regulating spring (3), and gradually permits communication between the holes (8) and (9), allowing fuel to return to the transfer pump intake through the passage (7).

By increasing and decreasing the passage through the holes (8) and (9), the valve regulates the transfer pressure value.
The valve also fills the transfer pump to ensure priming during the starting stage.

During this stage, the lack of inlet pressure allows the spring (3) to extend and to move the piston (2) which compresses the spring (1); the fuel present in the connection (7) enters through the hole (8), and passing through the piston (2) it emerges through the pipe (10) reaching the transfer pump.

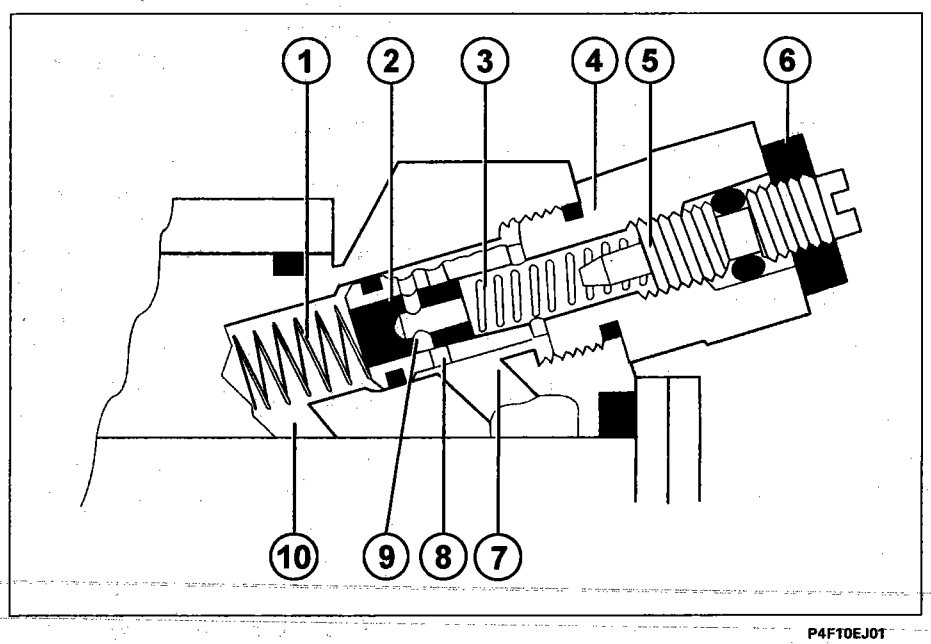

P4F10EJ01

1. Counter spring
2. Piston regulating the transfer pressure
3. Regulating spring
4. Regulating valve casing
5. Transfer pressure adjustment screw
6. Locknut
7. Return passage of regulated fuel to transfer pump
8. Adjustment hole
9. Filling hole
10. Fuel inlet from transfer pump

Hydraulic head

Fuel metering, pumping and distribution take place in the main section of the injection pump, called the hydraulic head.
The hydraulic head comprises two units:
- the hydraulic head stator;
- the distribution rotor, comprising a single element and two pumping pistons.

The distribution rotor is related to the hydraulic head seating, while the pumping pistons are related to their seatings in the rotor. This means that these parts are not interchangeable, but constitute a single assembly.

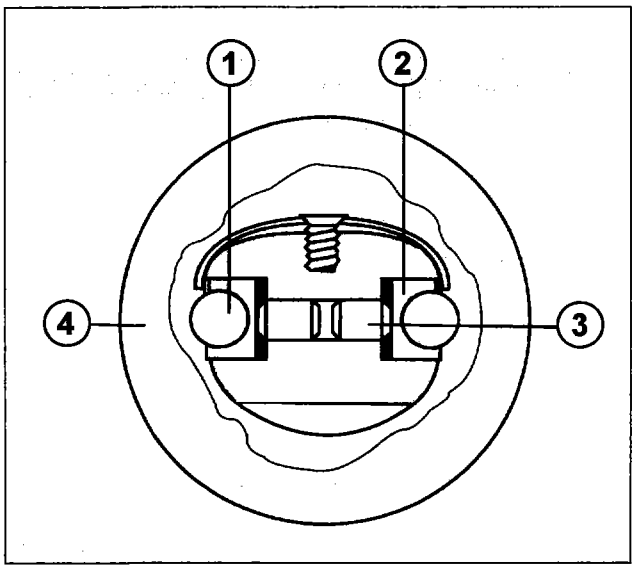

P4F11EJ01

1. Roller
2. Roller carrier
3. Piston
4. Cam ring

The fuel subjected to the transfer pressures enters into one of the holes in the hydraulic head; the opening of this hole is controlled by the movement of the metering valve connected to the mechanical regulator.
During the loading cycle, two loading holes in the rotor line up with two filling holes in the head's stator. A metered quantity of fuel, regulated by the metering valve, enters into the pumping element and moves the pumping pistons (3) away, pushing outwards the assembly formed by the roller (1) and roller carrier (2).
Rotating, the rotor interrupts the alignment between the loading and filling holes (end of filling cycle).
Continuing to rotate, one of the fuel delivery holes lines up with one of the high-pressure outlets.

Cam ring

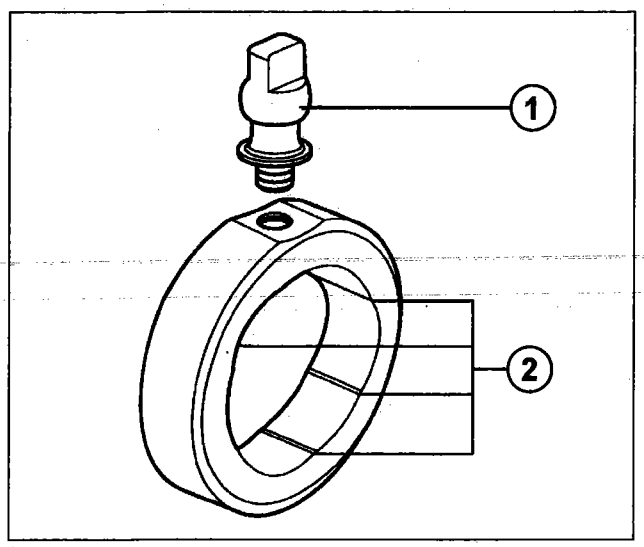

P4F11EJ02

1. Cam ring
2. Cam ring screw

The inner surface of the cam ring comprises diametrically opposed lobes (1) and is machined with the utmost precision.
The shape of the lobes causes the pressurization movement in the pump, determines the duration of the injection stage and evens out the delivery cycles.
The cam ring screw (2) connects the cam ring to the fuel injection advance adjustment system.
When the pump starts the injection cycle, the two roller and roller carrier units which are in contact with the pistons start moving inwards under the thrust of two opposing lobes.
This is the point of commencement of injection.
While the rotor continues to rotate, the rollers move upwards, until they reach the apex of the lobes.
This is the point of end of injection.
Continuing the fuel injection cycle, the rollers lose contact with the cam ring and the hydraulic head rotor returns to the low pressure condition ready for the new loading cycle.

Copyright Fiat Auto

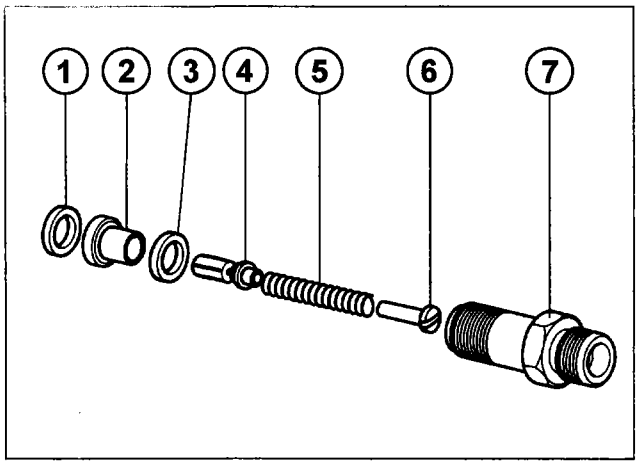

P4F12EJ01

1. Washer
2. Valve casing
3. Washer
4. Delivery valve
5. Spring
6. Spring guide
7. High-pressure outlet connection

High-pressure delivery valves

The delivery valves are enclosed between the high-pressure outlet connections (7) and the head's stator.

The fluid-tightness between the valve casing, head and connection is obtained by means of two steel washers (1 and 3).

The assembly consists of a valve casing (2) and a valve (4), connected to each other.

The maximum movement of the delivery valve is limited by the guide (6) of the spring.

The spring (5) pushes the valve (4) against the valve casing (2), keeping it in its seat.

At the end of the injection cycle, the delivery valves "recall" a certain amount of fuel from the high-pressure pipes to ensure that the nozzles close rapidly and, in combination with the profile of the cam ring, that the residual pressure in the high-pressure pipes is maintained.

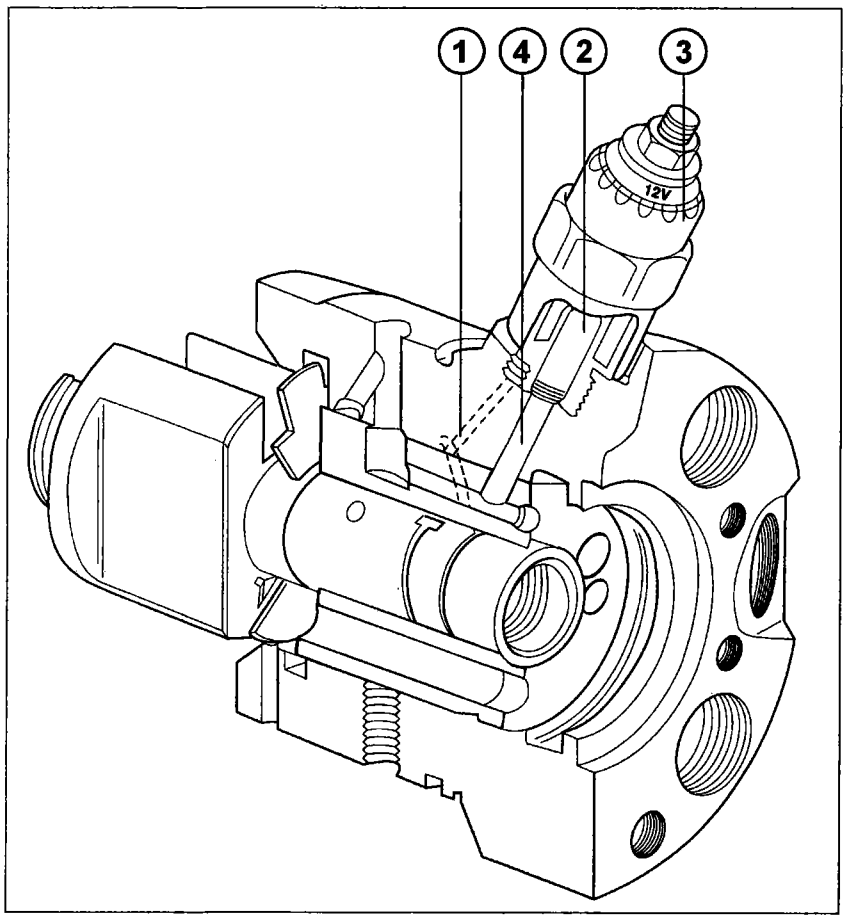

P4F12EJ02

Cut-off solenoid

The engine is turned off by cutting off delivery completely.

This result is obtained by a solenoid valve (3) screwed into the hydraulic head which acts between the passage of the transfer pressure (1) and the passage of the supply to the metering valve (4).

The cut-off solenoid, also called Electrostop, is connected to the Fiat CODE system directly, and for this reason is protected by a tamper-proof cover.

1. Passage for the transfer pressure
2. Piston
3. Solenoid unit
4. Passage of fuel to metering valve

Turbocharging control valve

The function of the turbocharging control valve is to adjust the maximum flow rate of the fuel in relation to the variation in pressure of the intake air caused by the turbocharger.

The turbocharging control valve comprises a valve casing (1) containing a piston (2) which rests against a spacer (3).

Two diaphragms (4) of different sizes are on the two sides of the spacer (3).

The turbocharging pressure is produced by the turbocharger, and it enters between the two diaphragms through the connection (7).

The turbocharging valve is inserted in the transfer pressure circuit in a point between the transfer pump and flow rate supplement device.

It varies the pressure which acts on the pistons of the supplement device in accordance with the air pressure supplied by the turbocharger.

During acceleration, the engine speed increases as does the pressure produced by the turbocharger which reaches the turbocharging control valve, gradually moving the diaphragms (4) which compress the spring (5).

The piston (2) of the valve moves, opening the discharge hole (8) and causing a fall in pressure behind the pistons of the flow rate supplement device.

In these conditions, the spring of the supplement device can gradually push the system towards the "supplement on" position.

This movement allows the piston of the control valve (2) to gradually open an orifice (8) which allows the fuel to discharge through the fuel return pipes to the tank, and to reduce the accumulated pressure upstream of the pistons of the supplement device.

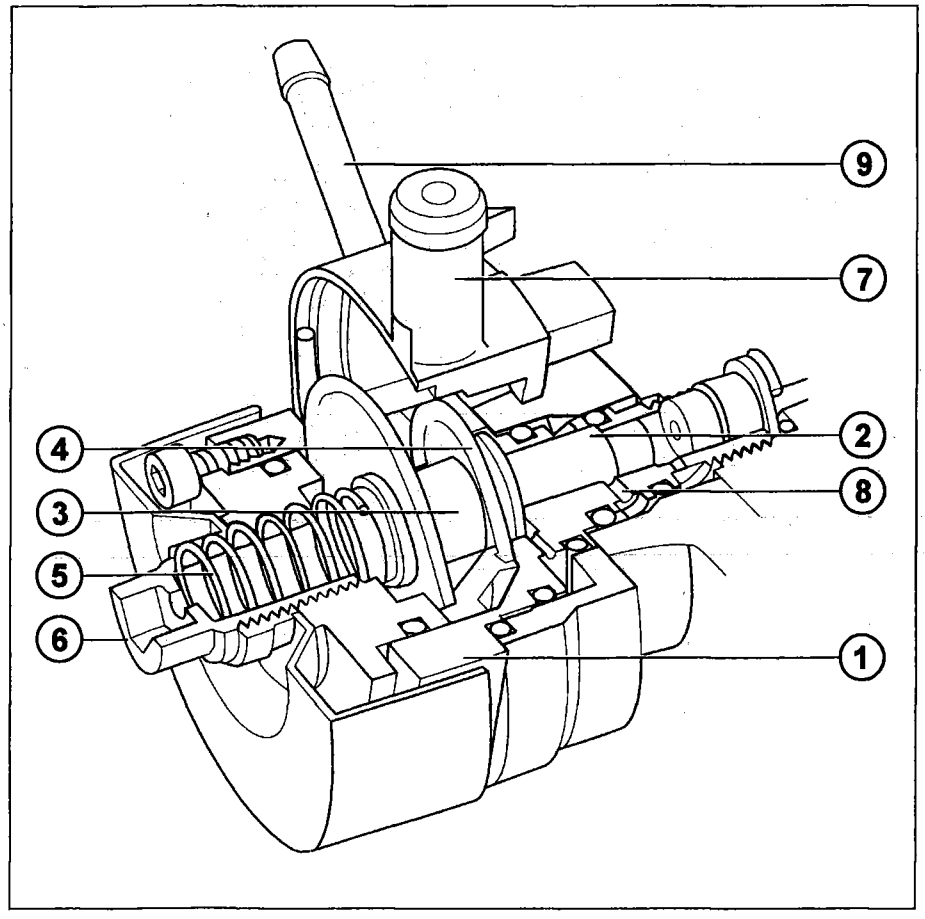

P4F13EJ01

1. Valve casing
2. Piston
3. Spacer
4. Diaphragms
5. Spring
6. Adjustment screw
7. Connection for the turbocharging pressure
8. Discharge of the transfer pressure
9. Recovery connection

Speed regulator

The speed regulator connects the throttle lever (1) to the metering lever (7). Its function is to control the idle speed (and fast idle) and maximum speed of the engine.

The idle/maximum regulator (min/max device) (2) consists of a preloaded spring contained in a steel tube which connects the throttle lever (1) to the top of the regulator plate (3). In turn, the regulator plate rotates the metering valve (7) via a connecting rod (5).

A blade spring (14) secured to the front of the regulator plate controls the idle speed.

The weight carrier (10), which is secured to the drive shaft (11), contains a number of weights (9) subject to a centrifugal force which varies in accordance with the engine speed.

During idling, the centrifugal force which acts on the weights is weak, and the regulator plate is balanced between the force exerted by the weights (9) and the force of the blade spring (14) which rests on the ledge of the idle shaft.

During acceleration, the accelerator lever (1), via the regulator rod (5), moves the metering valve (7) towards the fully open position.

The centrifugal force exerted by the weights increases, but remains less than that of the preload of the spring of the min/max device (2).

This means that the connection between the metering valve (7) and the accelerator lever (1) is direct.

During regulation, or when the speed reached increases the centrifugal force of the weights so as to overcome the preload of the spring of the min/max device, the regulator controls the position of the metering valve (7).

In this case, the connection between the metering valve (7) and the accelerator lever (1) is no longer direct.

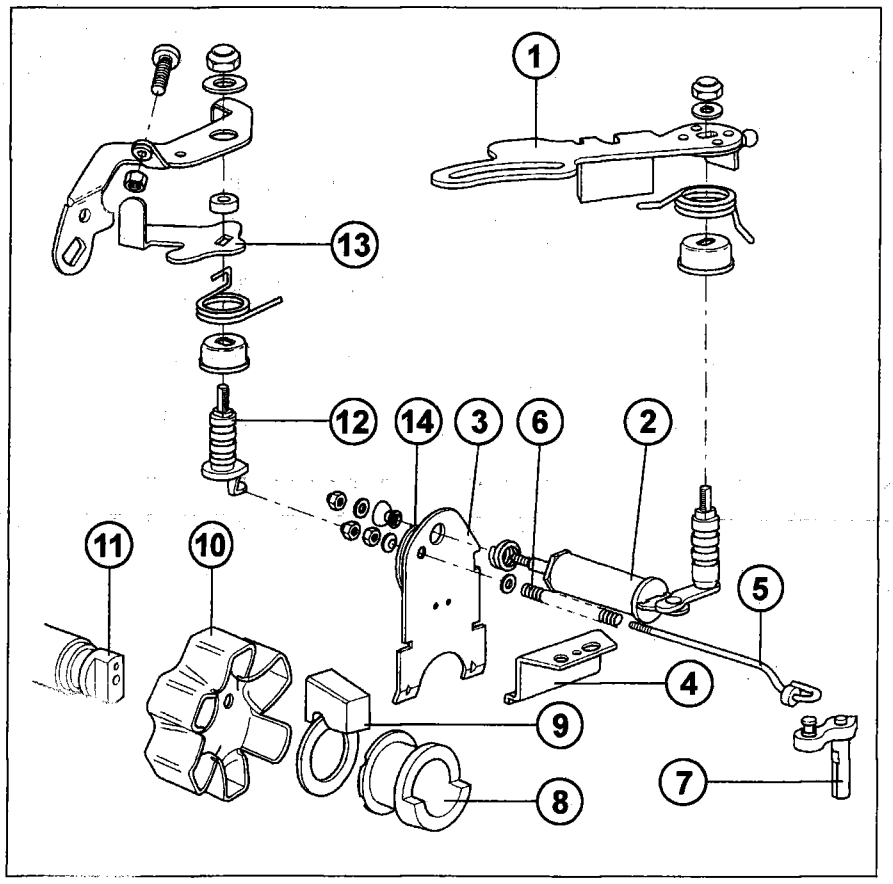

P4F14EJ01

1. Accelerator lever
2. Min/max device
3. Regulator plate
4. Regulator bracket
5. Regulator rod
6. Regulator rod spring
7. Metering valve
8. Regulator sleeve
9. Regulator weights
10. Weight carrier
11. Drive shaft
12. Idle shaft
13. Idle lever
14. Idle blade spring

ELECTRICAL - ELECTRONIC CIRCUIT

The electrical - electronic circuit of the fuel system comprises mainly wiring, an electronic control unit and the following sensors and actuators:

- Rpm sensor
- Coolant temperature sensor
- Air flowmeter
- Intake air temperature sensor
- Instrumented injector
- Accelerator lever position sensor
- Fast idle solenoid
- Preheating control unit

Electronic control unit

The electronic control unit (ECU) is located under the glove compartment (right side) and is connected to the wiring by means of a 25 pin connector.

This receives all the data relating to the engine's operating condition sent by the various sensors, in addition to the atmospheric pressure information obtained via a sensor located inside the control unit.

By means of these data and with the help of specific programs, the control unit is able to carry out the following operating strategies:

- management of injection advance
- management of fast idle
- management of exhaust gas recirculation
- management of air conditioner
- management of plug pre/post-heating

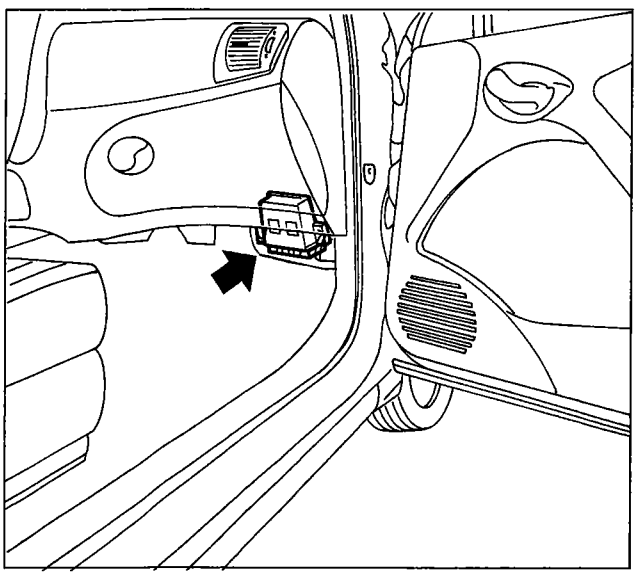

P4F15EJ01

Location of electronic control unit

MANAGEMENT OF INJECTION ADVANCE

By means of the engine rpm/PMS, throttle lever position, atmospheric pressure, intake air temperature and coolant temperature data, the electronic control unit calculates the optimum injection advance and compares it with the real value transmitted by the instrumented injector and, if necessary, drives the solenoid which controls the advance actuator so that the point of commencement of injection always occurs at the most appropriate moment during all the engine's operating conditions.

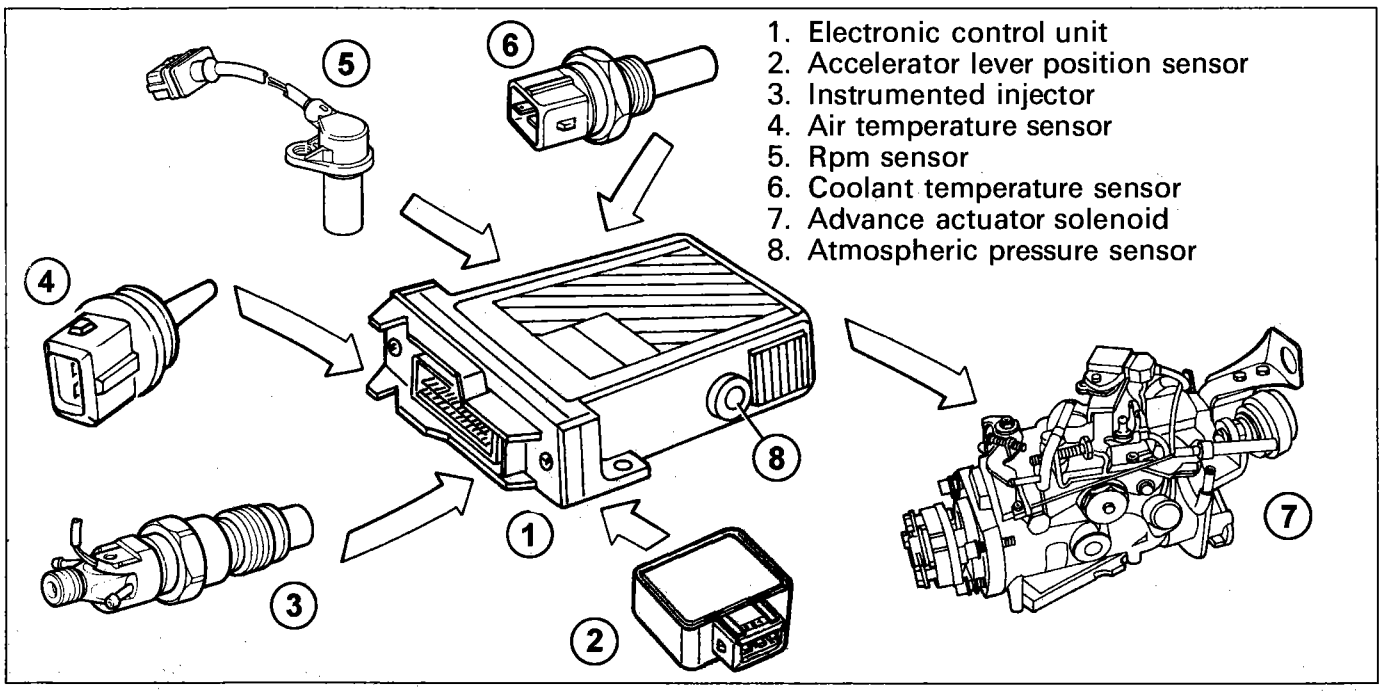

P4F16EJ01

MANAGEMENT OF FAST IDLE

The fast idle function is switched on by the control unit when at least one of the following conditions arises:

1. intake air temperature below 25 °C and engine coolant tmperature below 55 °C;
2. air conditioner compressor on;
3. idle speed below 750 rpm.

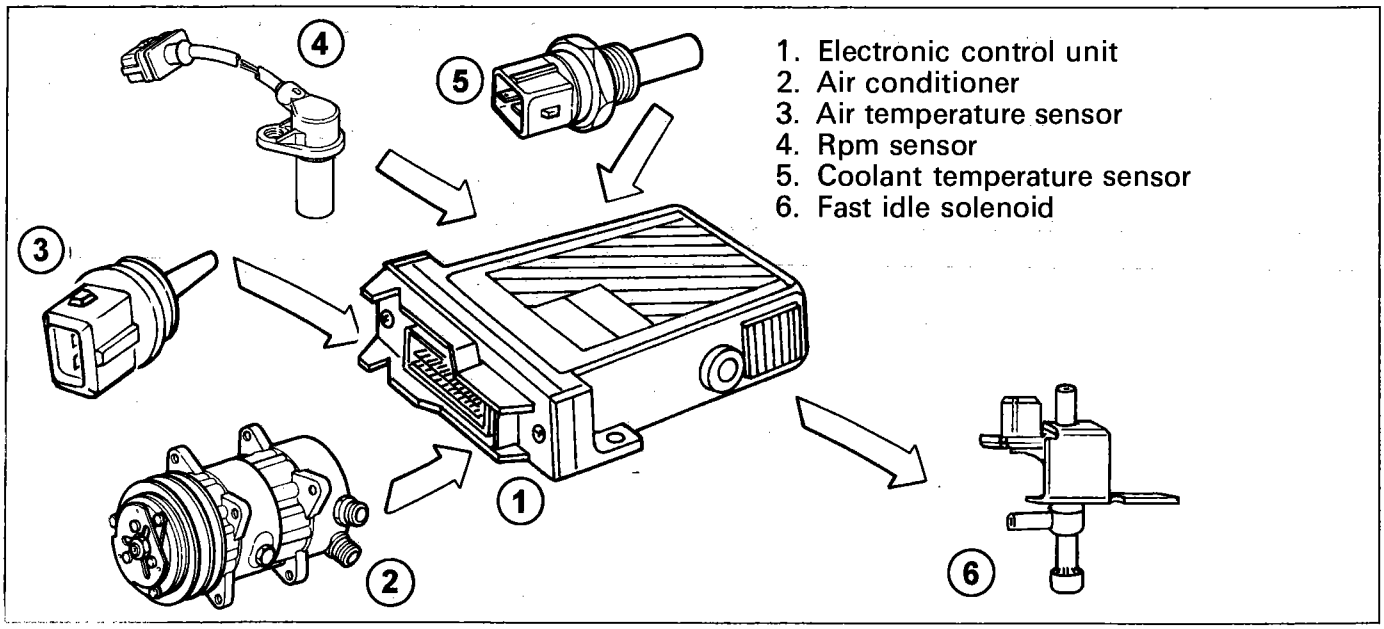

P4F16EJ02

MANAGEMENT OF EXHAUST GAS RECIRCULATION

The electronic control unit calculates the weight ratio between the "clean" air drawn in and the quantity of burnt gases which can be drawn in. Depending on the engine load, coolant temperature, atmospheric pressure and quantity of air drawn in, the electronic control unit drives the Borg Warner solenoid which in turn activates the EGR valve by means of a vacuum signal, thus permitting partial recirculation of the exhaust gases.

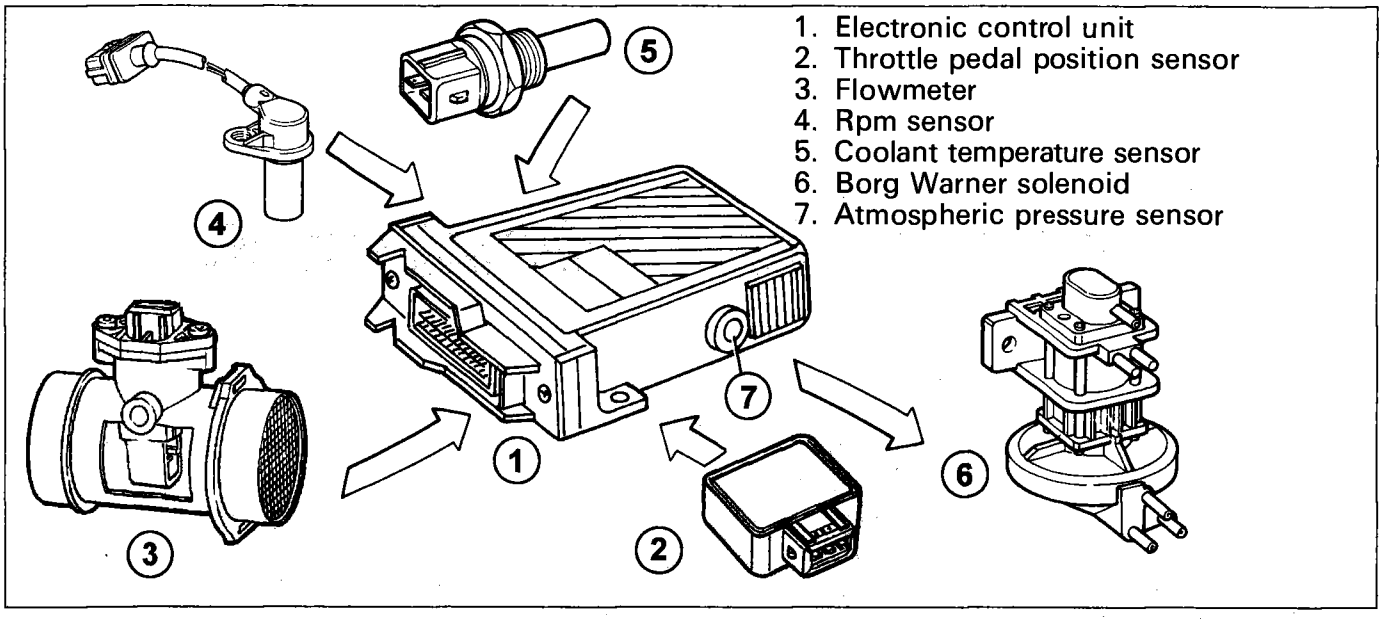

P4F17EJ01

MANAGEMENT OF AIR CONDITIONING SYSTEM

When the air conditioner is switched on, the compressor absorbs power from the engine which, during idling, would stall. To prevent this problem, the control unit activates the fast idle function described above.
Another function carried out by the control unit is to interrupt the supply to the compressor if one of the following conditions arises:
1. Coolant temperature over 110 °C;
2. Surpassing of a particular rpm threshold (about 4500);
3. High engine power requirement (heavy acceleration).

In conditions 1 and 2, the supply is restored when the coolant temperature or engine rpm values fall below the intervention threshold.
In condition 3, the interruption is only temporary and is automatically restored after a few seconds, even if the high power requirement is still in progress.

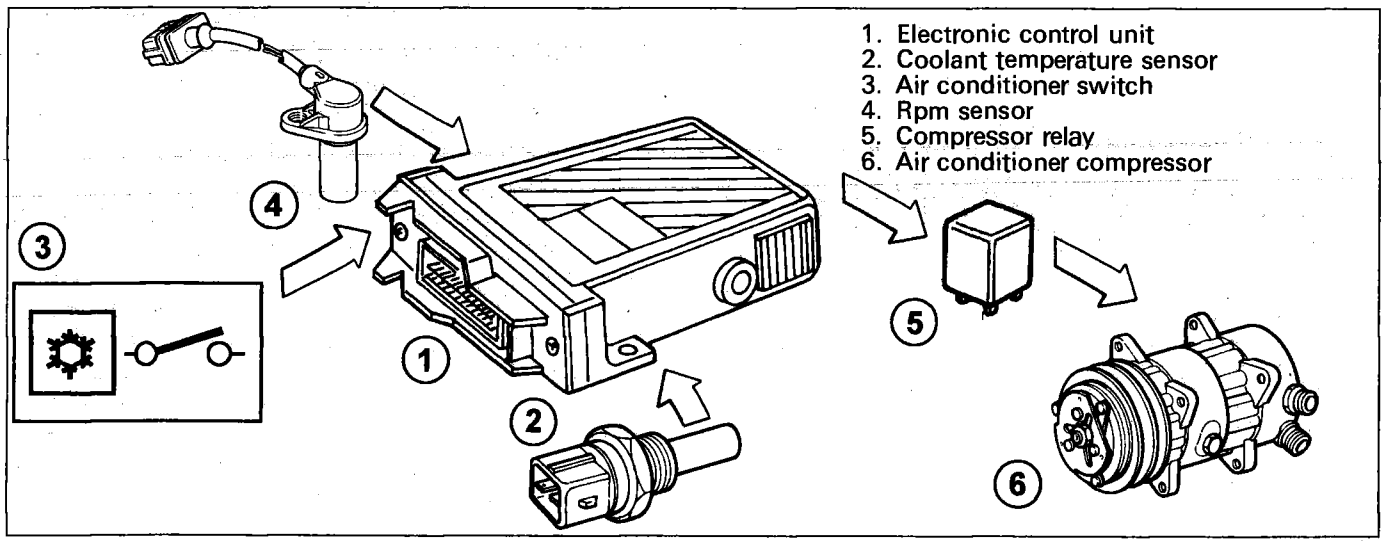

P4F17EJ02

MANAGEMENT OF PLUG PRE/POST-HEATING

The electronic control unit directly controls the plug preheating control unit, managing the pre- and post-heating times mainly in accordance with the engine coolant temperature and intake air temperature.

To calculate the post-heating times, the control unit also assesses the throttle lever position values and rpm, reducing these times in the case of a high engine power requirement.

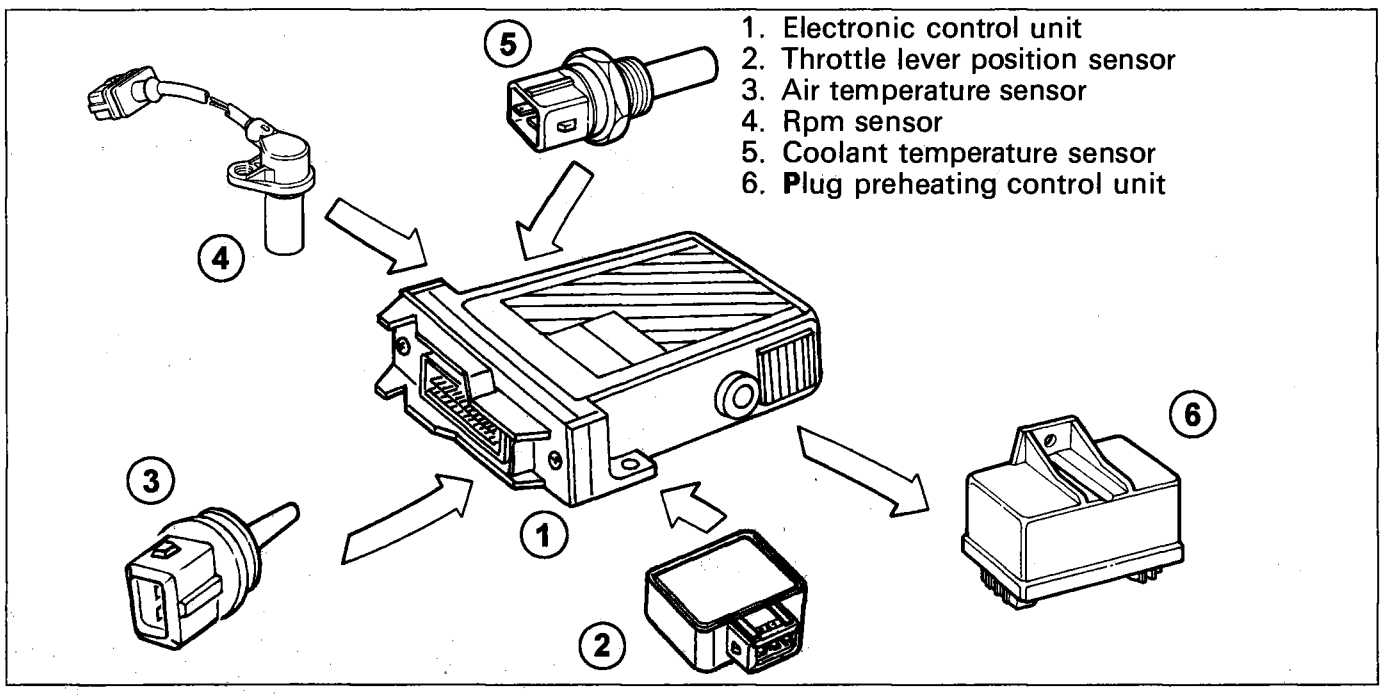

P4F18EJ01

Instrumented fuel injector

The instrumented fuel injector informs the electronic control unit of the actual injection advance (start of the injection stage, i.e. start of the movement of the needle valve).

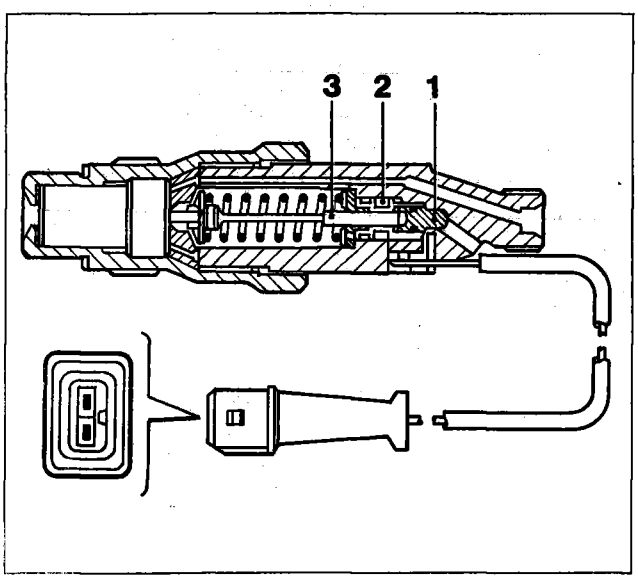

P4F18EJ02

On the basis of the signal, the control unit corrects the advance set by the injection actuator until the nominal value is reached.

The injector is fitted to the cylinder (1) and comprises a device for recognizing the exact moment of commencement of injection, and wiring for sending a signal and informing the electronic control unit.

Inside the injector there is a coil (2), a needle valve (3) and an adjustment pin (1). The coil is supplied electrically and generates a magnetic flow which affects the needle valve (3). When this valve starts the movement of opening the nozzle for injecting the fuel, it causes a change in the magnetic flow in the coil (2) which the control unit recognizes as the instant of commencement of fuel injection, on which it bases its advance adjustment strategy.

INPUT AND OUTPUT SIGNALS TO/FROM CONTROL UNIT/SENSORS AND ACTUATORS

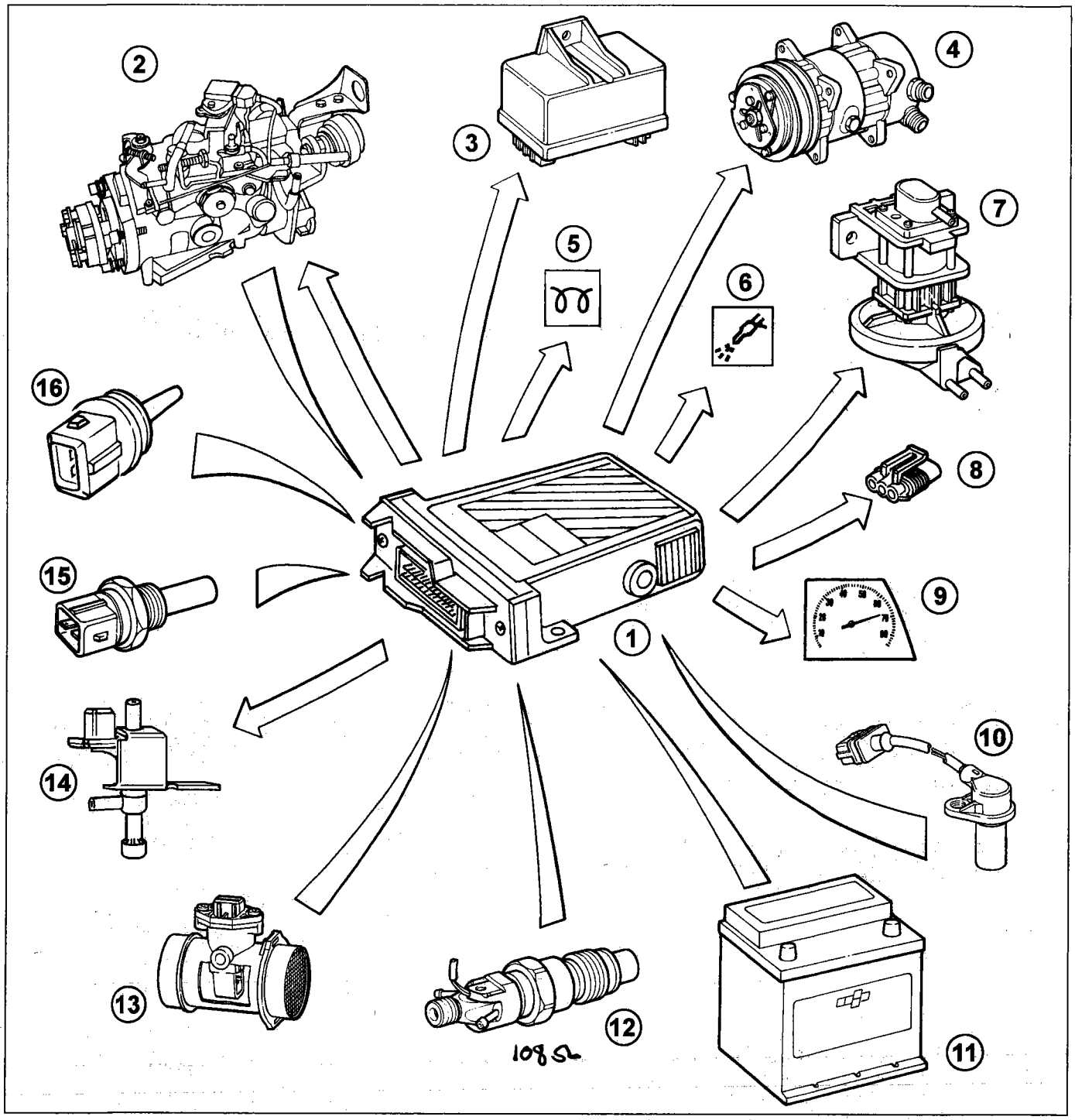

P4F19EJ01

1. Electronic control unit
2. Injection pump
3. Plug preheating control unit
4. Air conditioner
5. Plug preheating warning light
6. Fuel injection fault warning light
7. Borg Warner solenoid
8. Diagnostic socket
9. Rev counter
10. Rpm sensor
11. Battery
12. Instrumented fuel injector
13. Air flowmeter
14. Fast idle valve
15. Coolant temperature sensor
16. Air temperature sensor

Copyright Fiat Auto

WIRING DIAGRAM

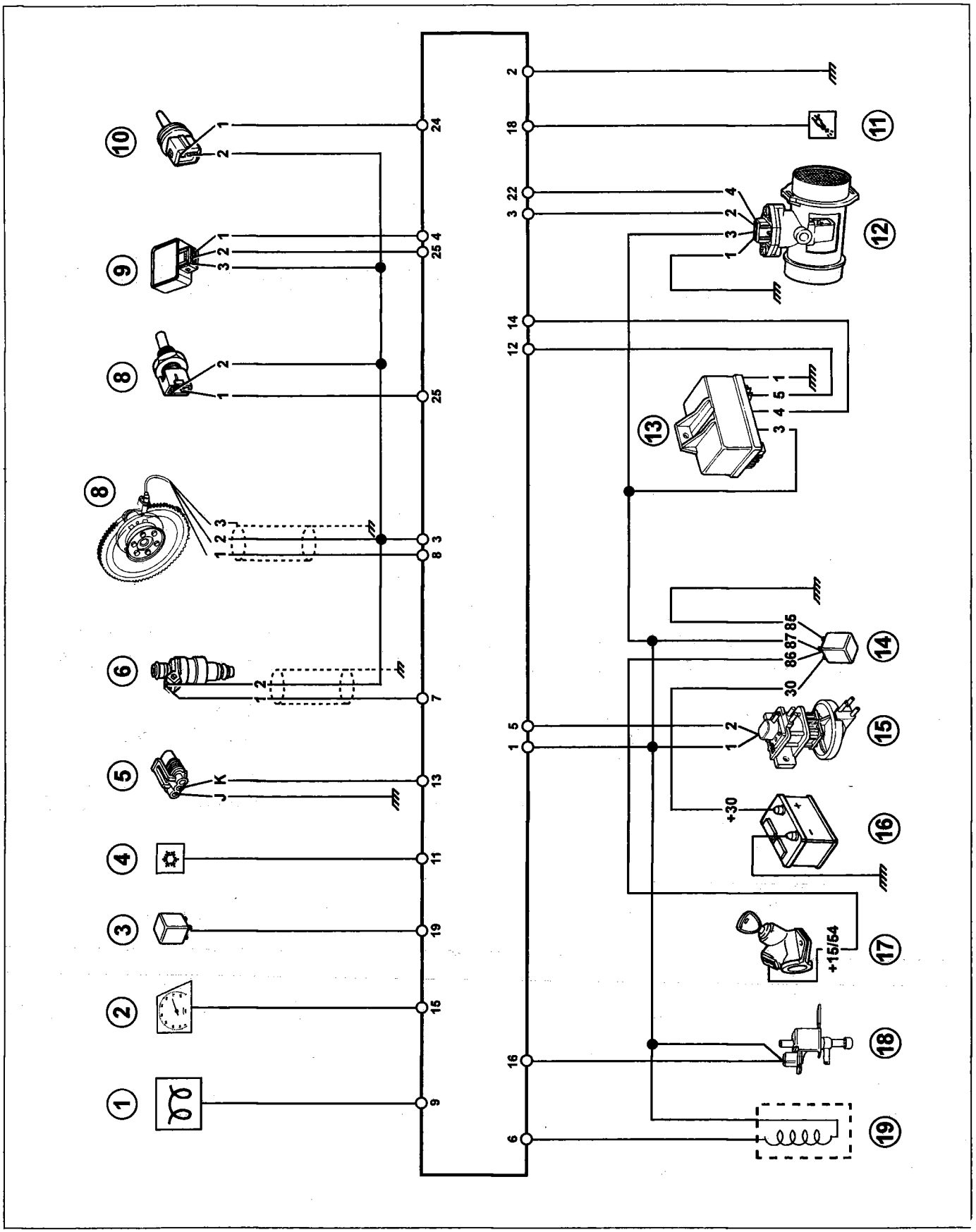

Key to wiring diagram

1. Heater plugs warning light
2. Rev counter signal
3. Air conditioner relay
4. Air conditioner on button
5. Fiat/Lancia Tester diagnostic socket
6. Instrumented fuel injector
7. Rpm and TDC sensor
8. Coolant temperature sensor
9. Fuel insertion lever position sensor
10. Intake air temperature sensor
11. Fuel injection fault warning light
12. Flowmeter
13. Preheating control unit
14. System supply relay
15. Fuel vapours solenoid
16. Battery
17. Ignition switch
18. Fast idle solenoid
19. Solenoid for advance adjustment device

Engine rpm sensor and phonic wheel

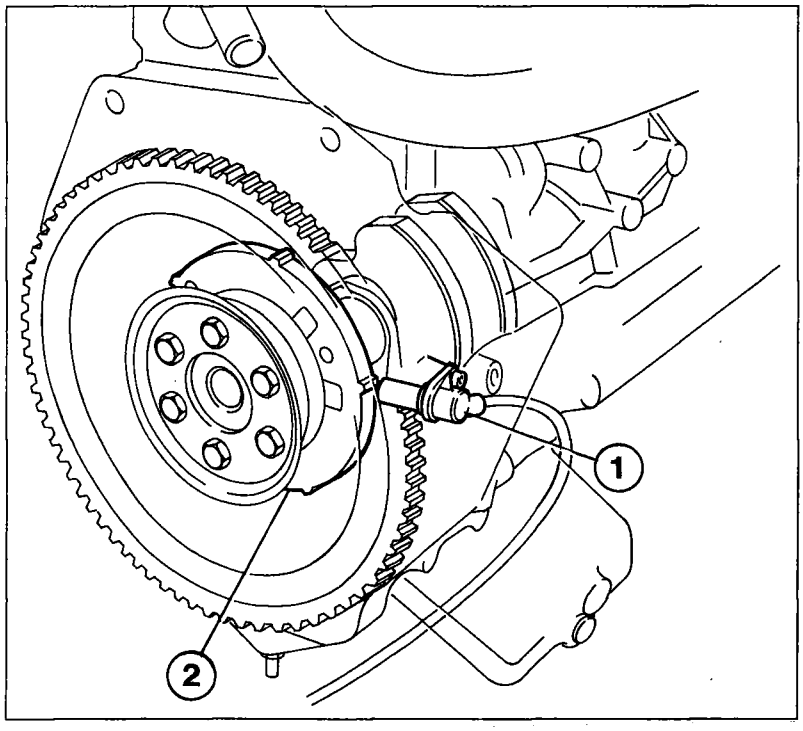

P4F21EJ01

Characteristics:

Gap
0.8 - 1.5 mm

Winding resistance
860 ohm ± 10% at 20°C

1. Rpm sensor
2. Phonic wheel

The engine rpm sensor is mounted on the engine block and is opposite a phonic wheel, located inside the engine block and secured to the crankshaft.

The sheet metal phonic wheel has 2 reference lugs positioned at 180° from each other, on the outer circumference.

Because the gap varies, the passage of these lugs or teeth under the sensor causes a change in the magnetic flow which leads to a current in the coils of the winding contained in the sensor.

This signal sent to the control unit allows the engine rpm to be detected.

Copyright Fiat Auto

Air flowmeter

The air flowmeter is of the "heated film" type; the principle of operation is based on a heated diaphragm which is interposed in a measuring channel through which the intake air entering the engine flows.

The film diaphragm is kept at a constant temperature (~120°C above the air temperature) by the heater element which is in contact with it.
The mass of air passing through the measuring channel tends to take heat away from the diaphragm, so to keep this temperature constant, some current must flow through the heating element; this current is measured by a suitable Wheatstone bridge.
The measured current is therefore proportional to the mass of air flowing through.

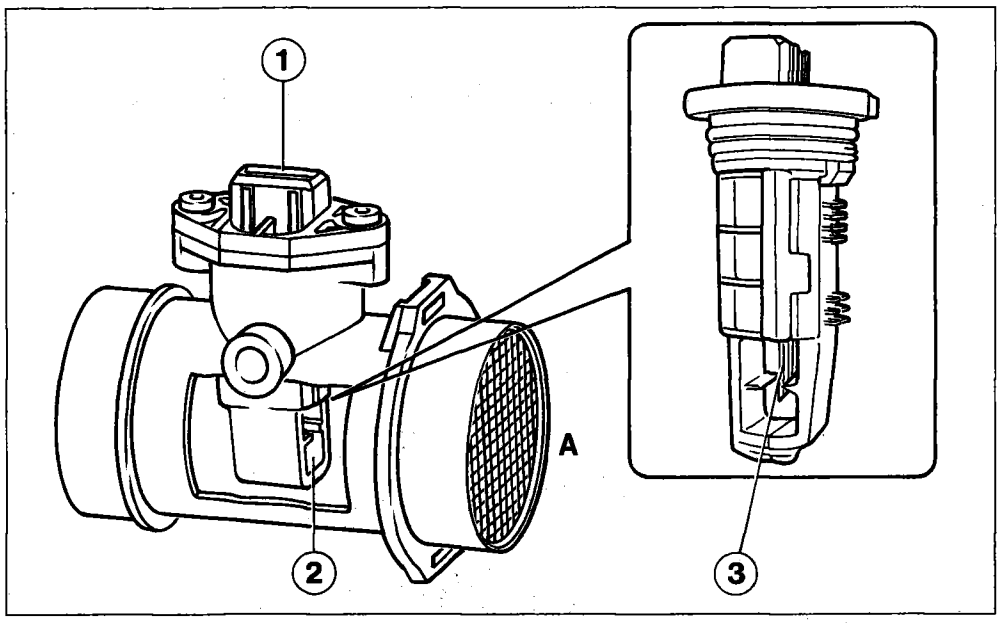

P4F22EJ01

1. Connector
2. Measuring channel
3. Hot film sensor

A= Air inlet

NOTE *This flowmeter directly measures the mass of air (and not volume), thus eliminating problems of temperature, altitude, pressure, etc.*

Description of operation

The Wheatstone bridge (formed by R3, R2, Rs, Rt+R1) is in equilibrium when Rs is at about 120°C above the air temperature.
The air passing through the diaphragm takes heat from Rs, so the bridge is unbalanced. This situation is detected by the circuit which is under IC1; this circuit controls, proportionally to the imbalance of the bridge, the transistor T1 which consequently allows more current to pass through Rh in order to heat Rs and so restore the balance of the bridge.
The circuit IC2 measures the current passing through Rh. This current allows the bridge to be kept in equilibrium and is thus proportional to the mass of air passing through the air flowmeter.

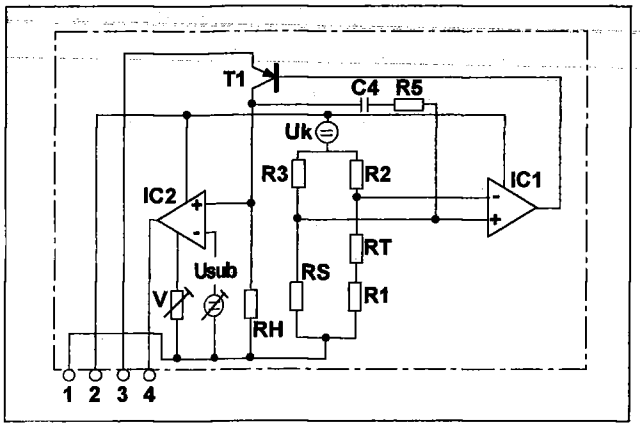

P4F22EJ02

Wiring diagram of air flowmeter

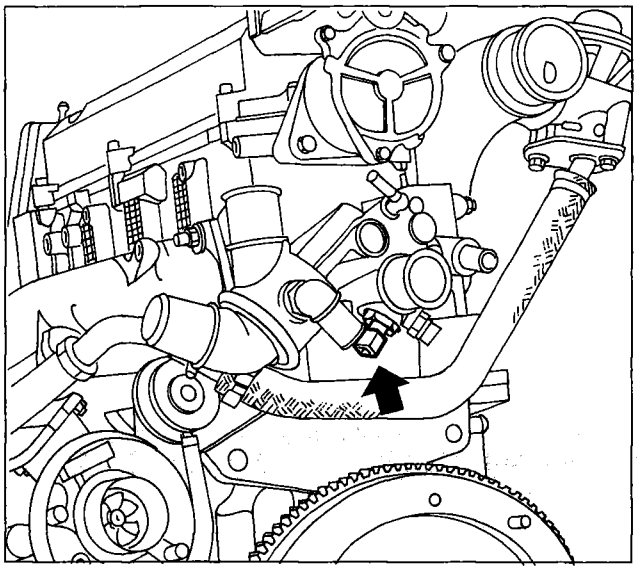

P4F23EJ01

Coolant temperature sensor

The coolant temperature is measured by a sensor consisting of an NTC resistor which varies the resistivity in inverse proportion to the temperature, as may be observed from the graph.

The control unit detects the variation in voltage proportional to the intensity of the current circulating in the sensor.
The sensor must be fitted taking care not to exceed a tightening torque of 15 Nm.

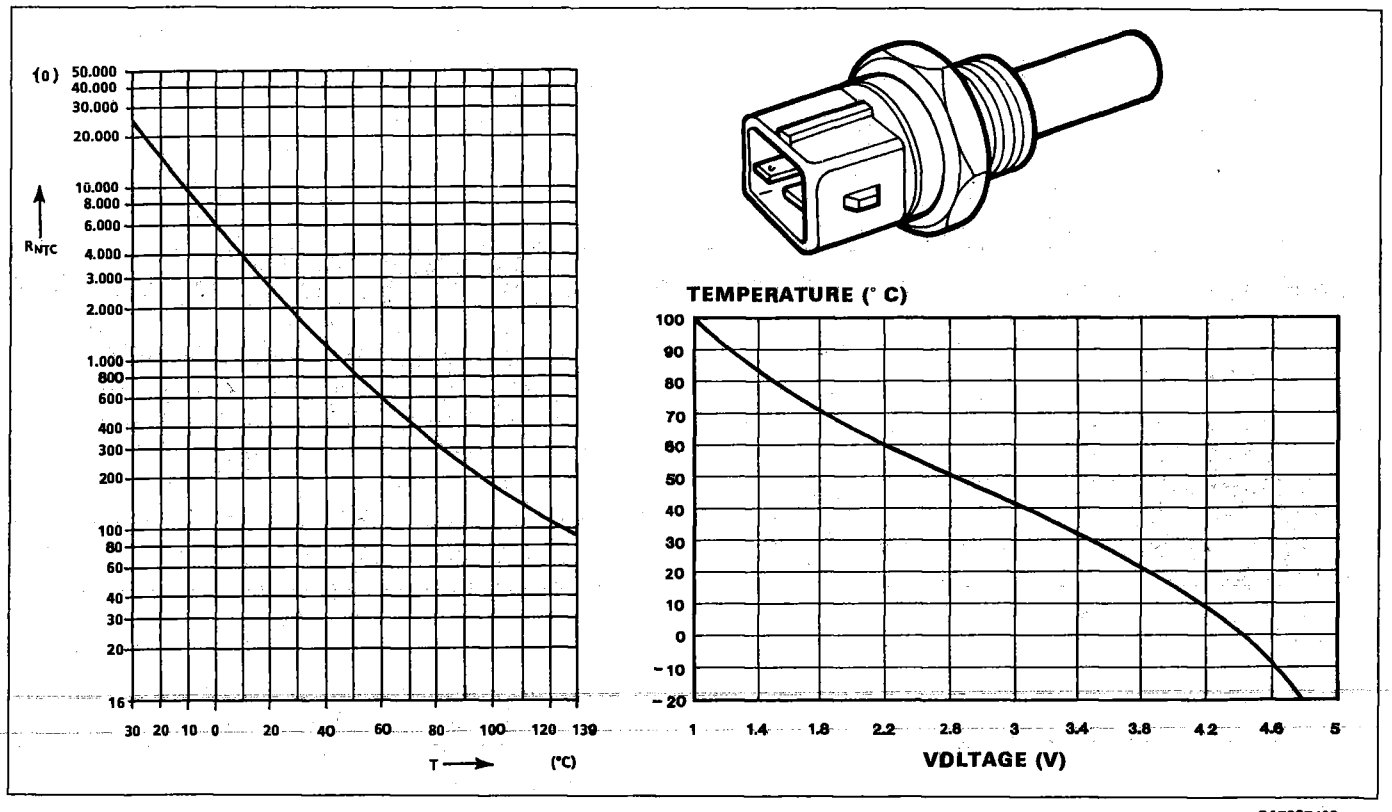

P4F23EJ02

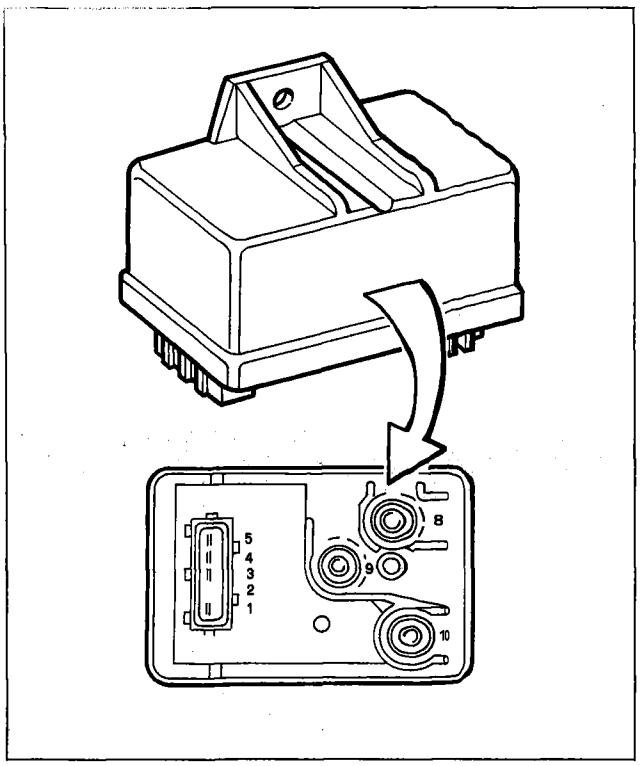

P4F24EJ01

Preheating control unit

The plugs are controlled by the preheating control unit, under the direct control of the electronic control unit.
Inside there is an "intelligent" relay which sends a feedback response to the fuel injection electronic control unit which is thus informed of a fault in the preheating control unit or a short circuit to earth of the plugs.

The figure shows the connectors located at the base of the preheating control unit and the relative pins.

Connections

1. Car earth
2. Not connected
3. Ignition switch (+15)
4. Electronic control unit (pre/post-heating activation)
5. Electronic control unit (fault diagnosis)
8. Battery positive
9. Heater plugs
10. Heater plugs

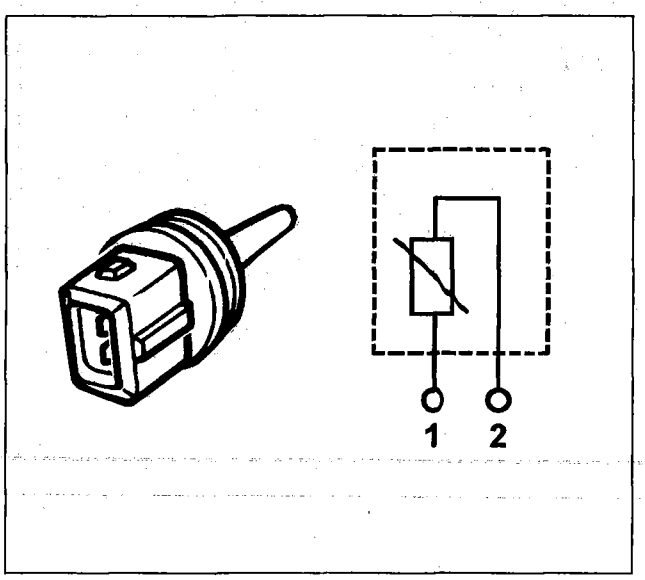

P4F24EJ02

Air temperature sensor

On this version, the intake air temperature sensor is separate from the air flowmeter: it is a normal NTC (Negative Temperature Coefficient) whose electrical resistance decreases as the temperature increases.

As the control unit's input circuit is designed as a voltage divider, this voltage is divided between a resistor present in the control unit and the sensor's NTC resistor.

Consequently the control unit can assess the variations in the sensor's resistance through changes in the voltage, and thus obtain the temperature information.

DIAGRAM OF RECIRCULATION OF GASES FROM CRANKCASE (BLOW-BY)

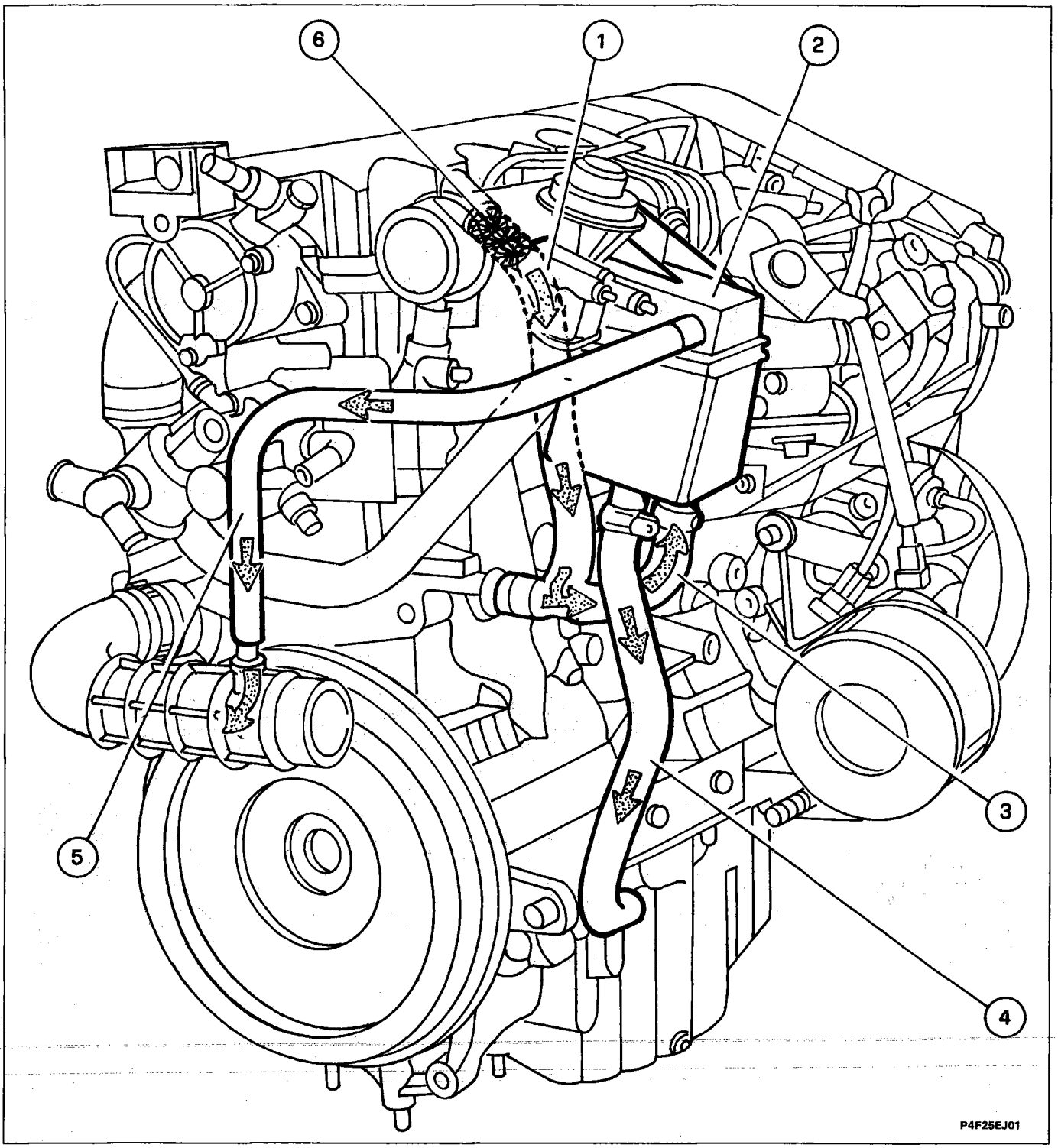

The crankcase emissions consist of mixtures of air-diesel and burnt gases which leak through the piston sealing rings, and also lubricating oil vapours. These are defined as "blow-by" or vent gases.

The vent gases coming from both the crankcase and cylinder head pass through the pipe (3) and reach the separator (2) where, following the vortex action to which they are subjected, they lost some of the oil dissolved in them which, in the form of drops, falls back into the sump through the pipe (4).
The remaining gases are instead conveyed to the intake circuit through the pipe (5).
Inside the gas outlet pipe (1) from the cylinder head, there is a flame trap (6) to prevent combustion phenomena caused by returning flames.

Copyright Fiat Auto

BURNT GAS RECIRCULATION SYSTEM (E.G.R. - Exhaust Gas Recirculation)

This system allows some of the exhaust gases to be sent to the inlet, under particular engine operating conditions.

Thus the fuel mixture is diluted with inert gases, reducing the temperature peak in the combustion chamber: in this way, the formation of nitroxgen oxides (NOx) is limited, leading to a reduction of 30-50 % in the exhaust.

The recirculation of burnt gases is only permitted at medium-low loads, when the air-mixture ratio is very high and the engine's operation is not impaired by the presence of inert gases instead of air.

The recirculation system is controlled by the electronic control unit (1) which receives input signals from the potentiometer on the throttle lever (located on the injection pump) and the rpm sensor and coolant temperature sensor, and provides an output control signal to the Borg Warner modulating solenoid (2) controlling the **E.G.R.**

This solenoid, connected to the atmosphere through a filter (3), on the basis of the control signal received, transmits a higher or lower vacuum coming from the brake servo vacuum pump (4) to the **E.G.R.** Pierburg valve (5).

If the vacuum is sufficient, this valve opens, placing the exhaust manifold in communication with the inlet manifold.

The quantity of recirculated gases can therefore be varied by continuously adjusting the aperture of the **E.G.R.** valve, using the maps memorized in the control unit relating to the degree of opening in accordance with the signals received.

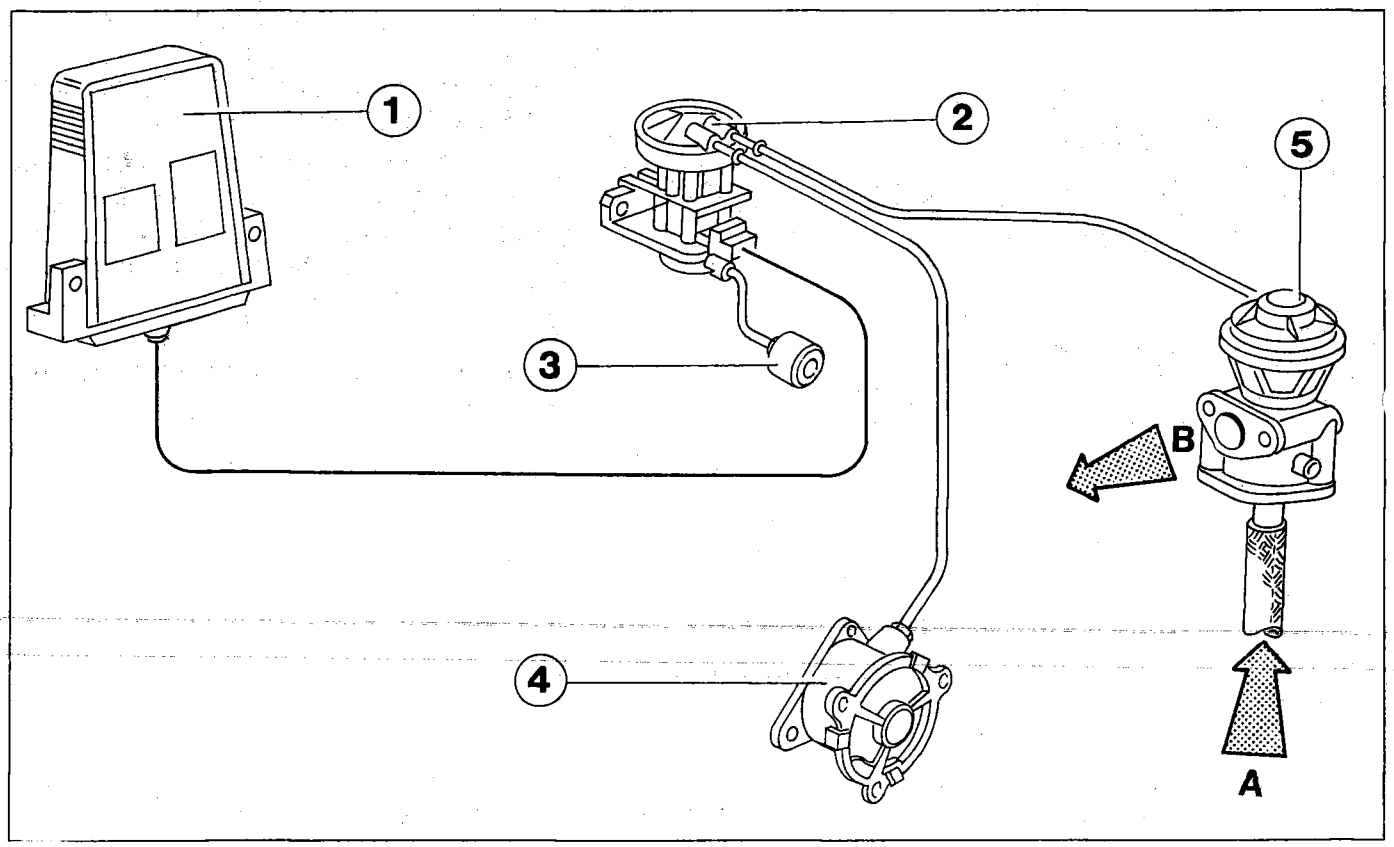

P4F26EJ01

1. **E**lectronic control unit
2. Borg Warner modulating solenoid
3. **A**tmospheric connection filter
4. Vacuum pump for brake servo
5. E.G.R. valve

A. Gas coming from the exhaust manifold
B. Gas sent to the inlet

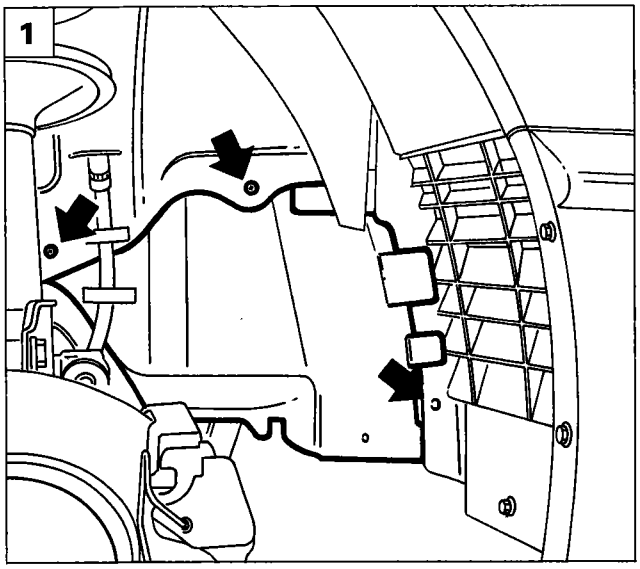

P4F27EJ04

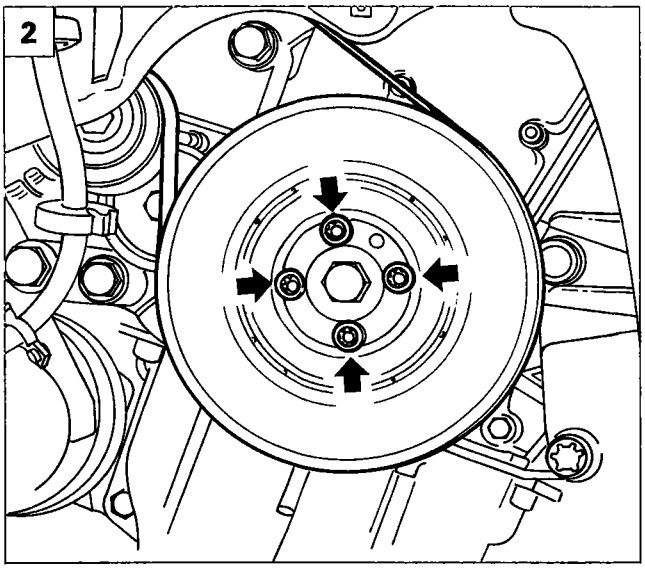

P4F27EJ01

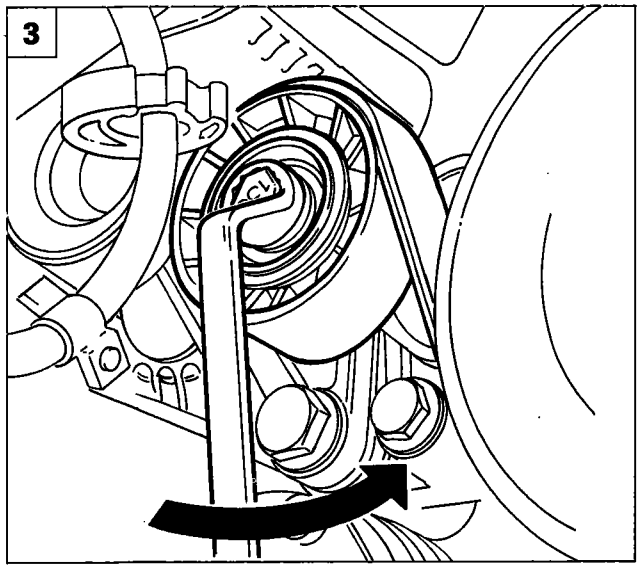

P4F27EJ02

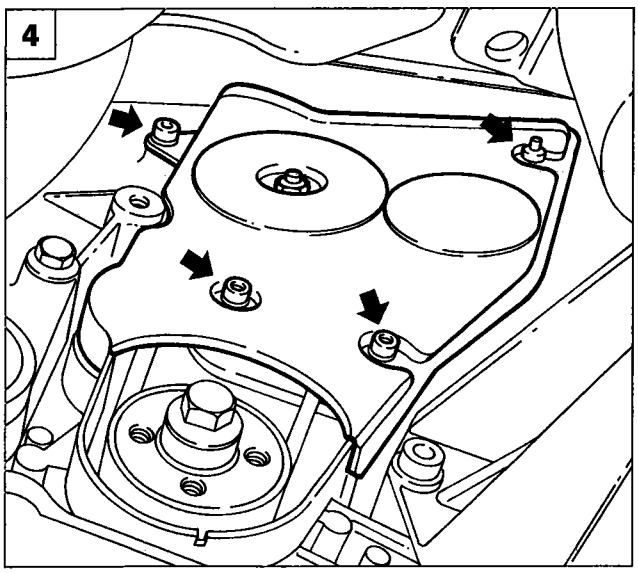

P4F27EJ03

REMOVING-REFITTING INJECTION PUMP

Place the car on ramps, disconnect the battery's positive terminal, remove the front right wheel and proceed as follows:

1. Remove the screws indicated and take off the front right wheelarch guard.
2. Slacken the bolts indicated, which secure the auxiliary components pulley.
3. Adjust the automatic tensioner to slacken the tension on the auxiliary components belt, then remove the belt.
4. Remove the timing belt bottom guard.

10.

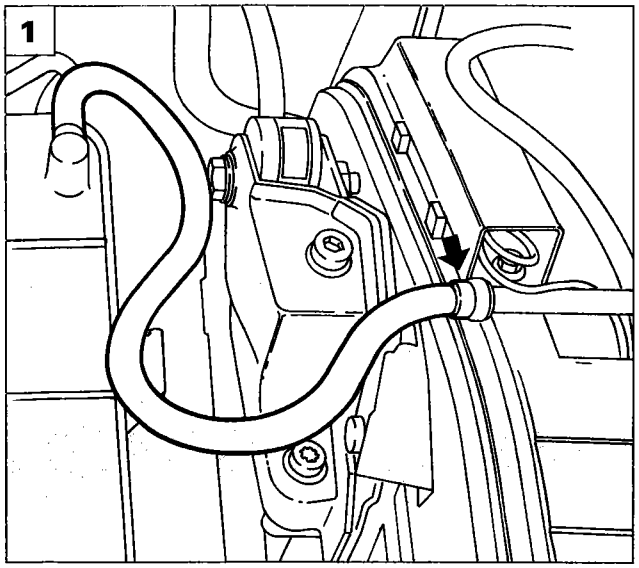

P4F28EJ01

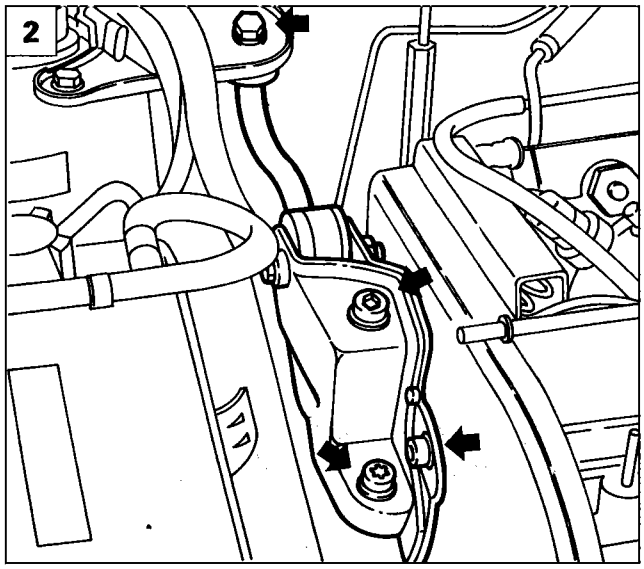

P4F28EJ02

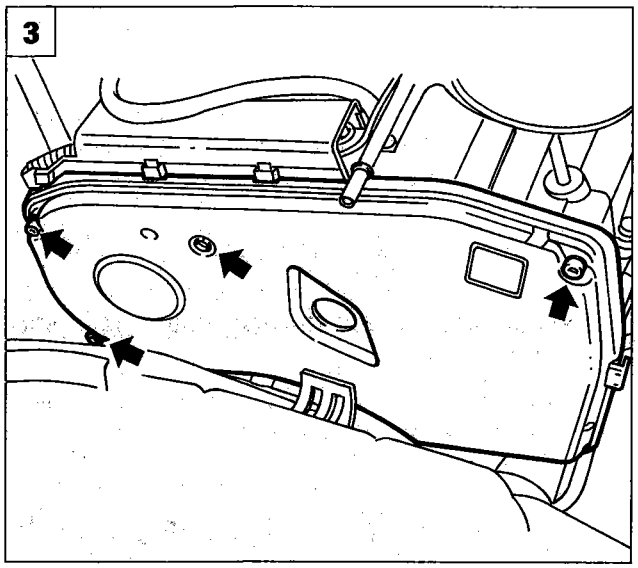

P4F28EJ03

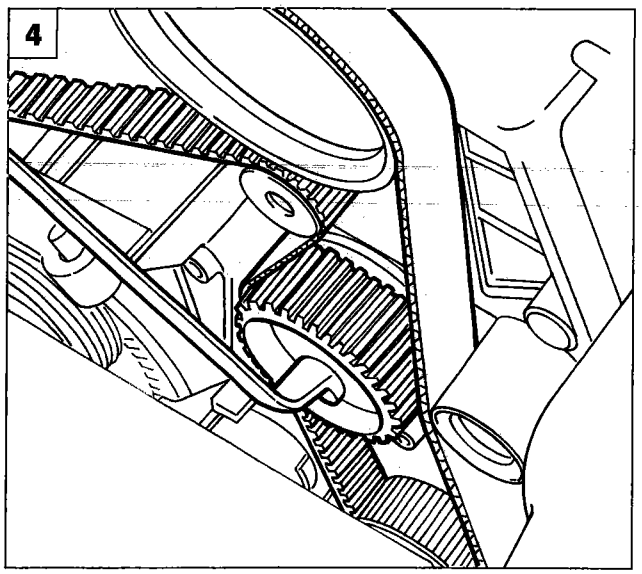

P4F28EJ04

1. Undo the clip and disconnect the coolant pipe.
2. Undo the bolts indicated, then remove the reaction rod and its mounting bracket (engine side).
3. Undo the screws and remove timing belt top guard.
4. Slacken the nut locking the timing belt tensioner, then remove the belt.

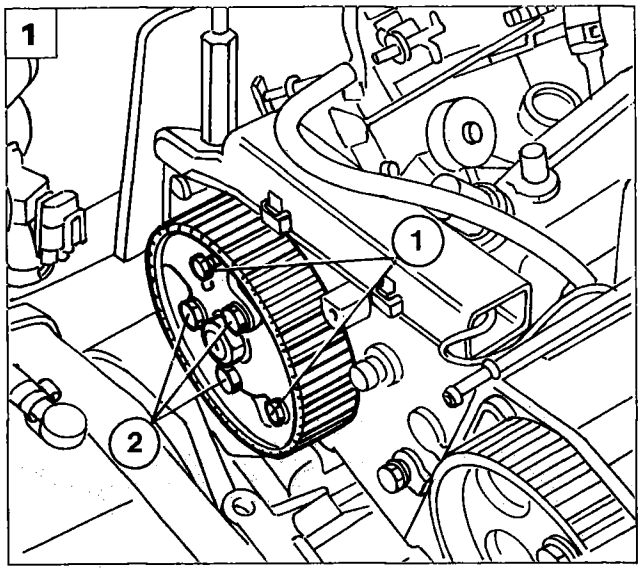

P4F29EJ01

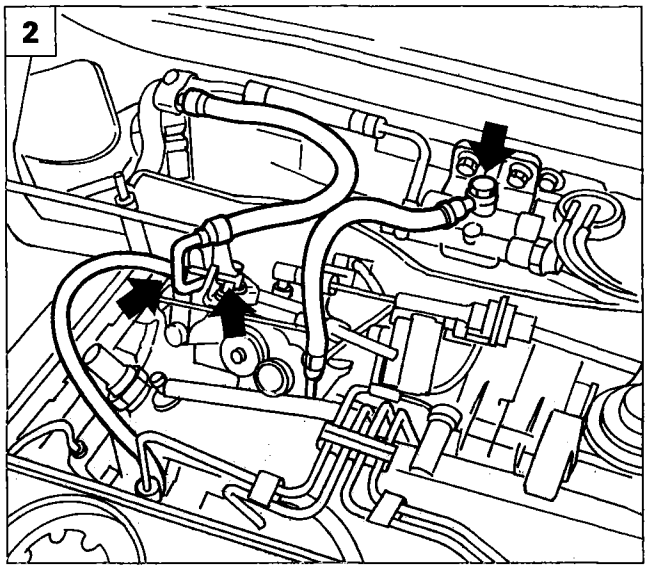

P4F29EJ02

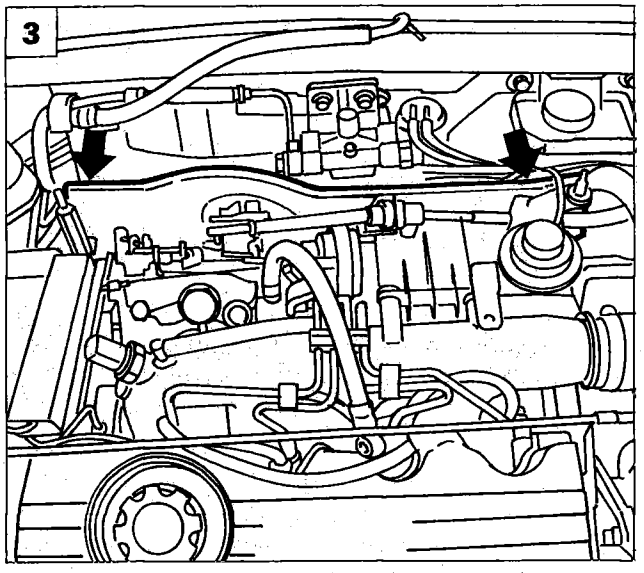

P4F29EJ03

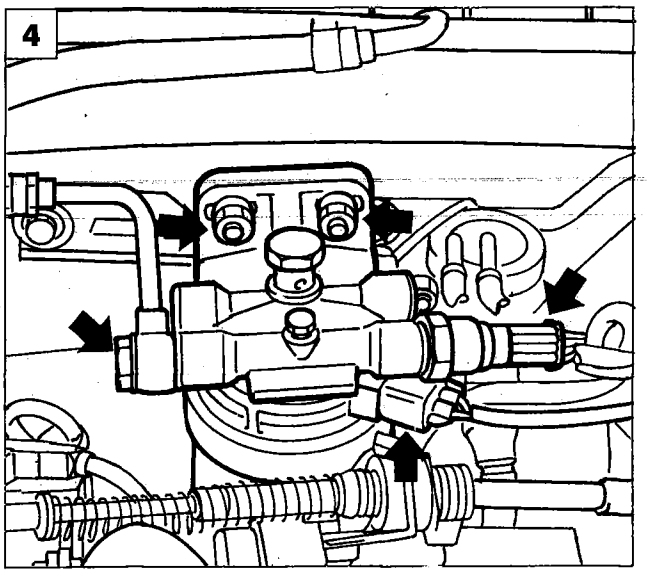

P4F29EJ04

1. Stop the fuel injection pump pulley rotating by screwing two service bolts (1) in the holes on the pump mounting, then undo the bolts (2) securing the pulley, undo the bolts (1) and remove the pulley.
2. Working at the points indicated, disconnect the diesel delivery pipes from the filter to the pump, the diesel return pipes from the pump to the tank and the diesel return pipes from the fuel injectors to the pump.
3. Undo the bolts and remove the sound-proofing guard.
4. Disconnect the wiring connections, disconnect the diesel delivery pipe from the tank to the filter, undo the nuts and remove the diesel filter.

Copyright Fiat Auto

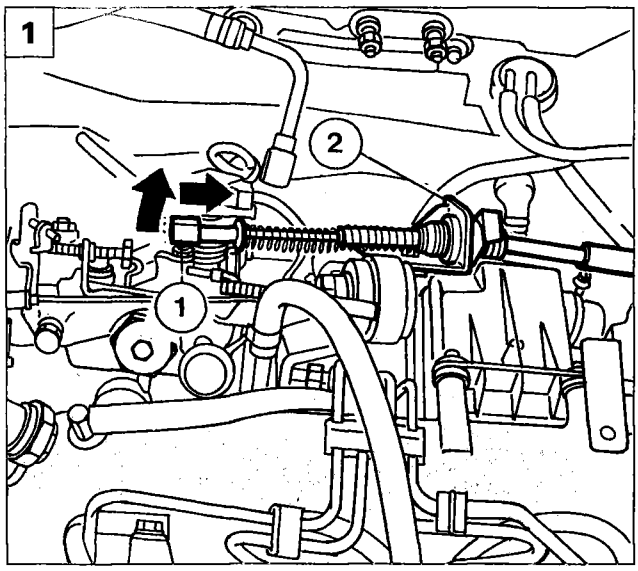

P4F30EJ01

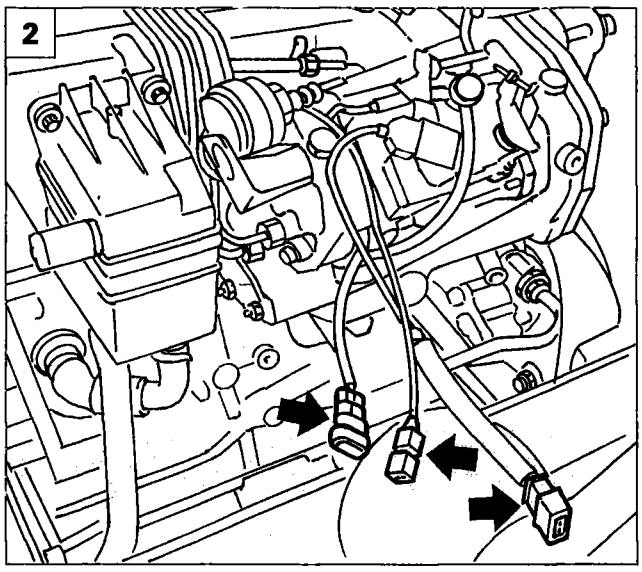

P4F30EJ02

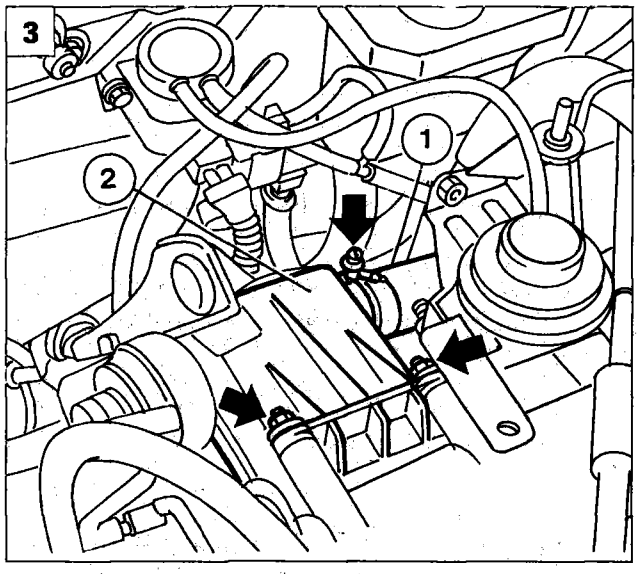

P4F30EJ03

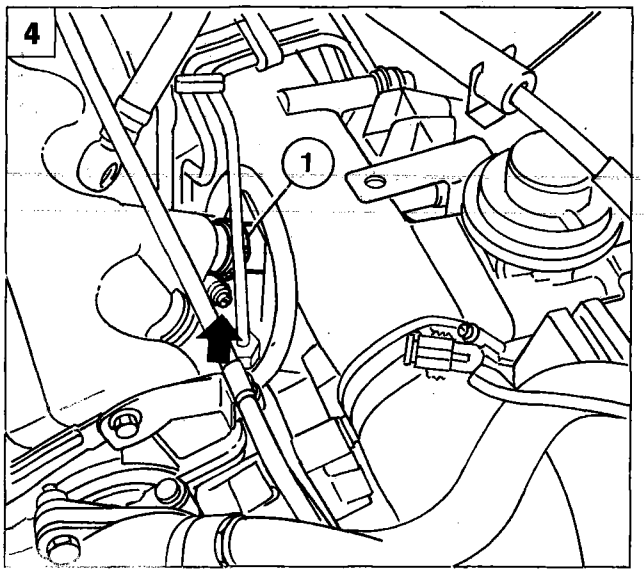

P4F30EJ04

1. Slide the clip (1) in the direction of the arrow, then remove the accelerator cable from the fuel injection pump by disengaging it from the attachment pin and withdrawing it from the mounting and adjustment bracket (2).
2. Disconnect the wiring connections indicated.
3. Disconnect the pipe (1) from the oil vapours separator (2). Undo the nuts securing the separator (2); a third nut (not illustrated) is on the underside of the separator.
4. Disconnect the pipe (1) which connects the oil vapour separator to the rocker cover and move the separator towards the engine compartment rear bulkhead.

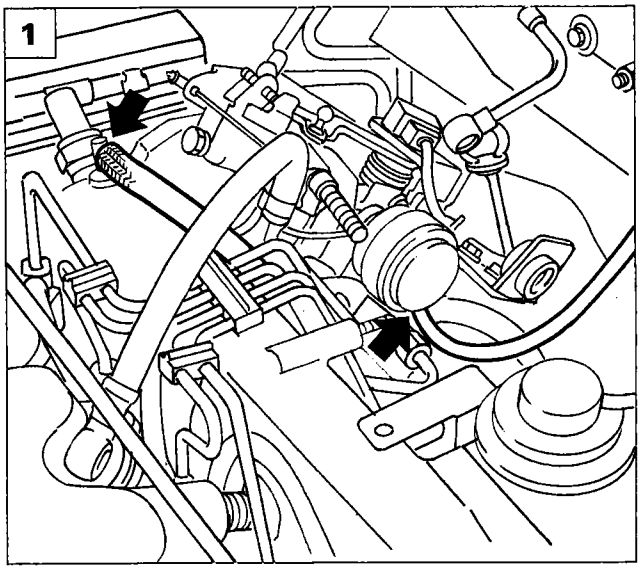

P4F31EJ01

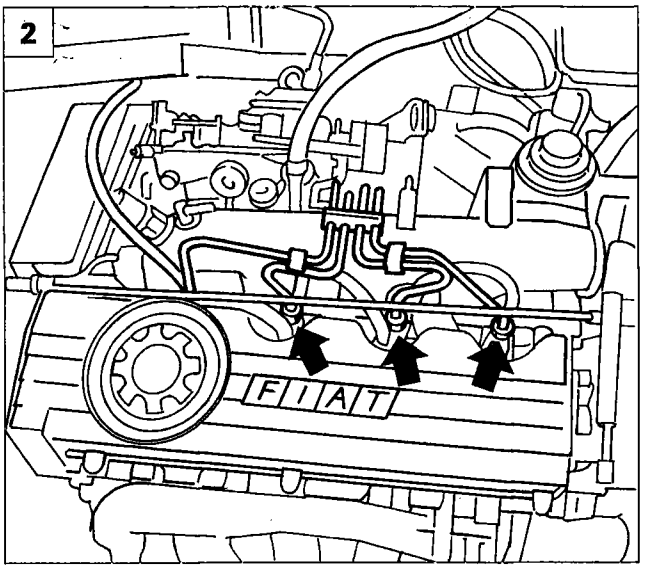

P4F31EJ02

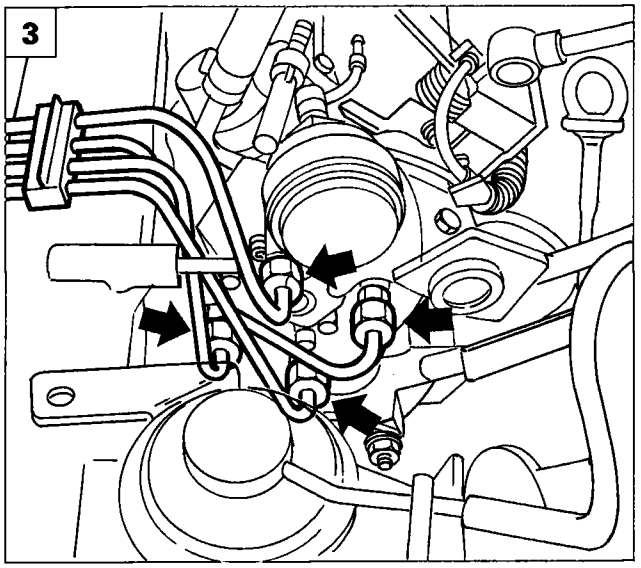

P4F31EJ03

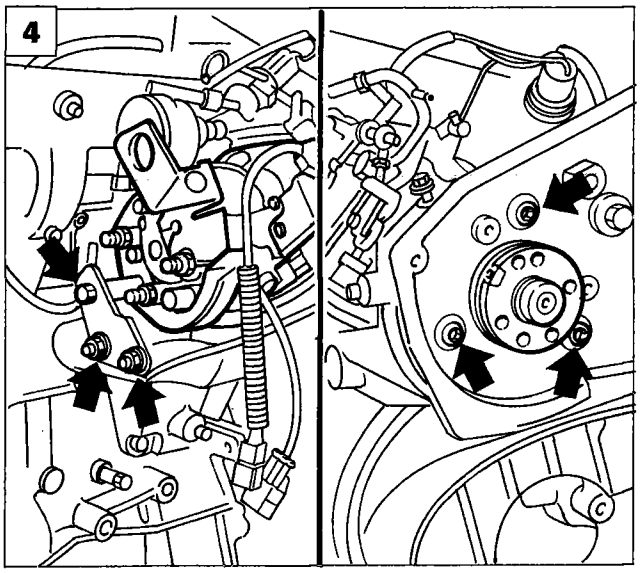

P4F31EJ04

1. Disconnect the vacuum pipe from the inlet manifold and fast idle actuator at the points indicated.

2. Using wrench 1852138000, undo the fuel supply pipe connections on the injectors.

3. Undo the connections (arrowed) on the pump and remove the fuel supply pipes.

4. Remove the fuel injection pump by undoing the attachments shown in the figure.

To refit the fuel injection pump, reverse the procedure described for remove, except for the timing belt.

Before refitting the timing belt, check that the timing is correct and then tension the belt as described in the sub-section "Replacing timing belt" in the Section "Removing-refitting power unit".

page

FUEL SYSTEM

Fuel system with Bosch VER-679 pump 1
- Introduction 1
- System components 1
- Air intake circuit 2
- Blow-by gas recirculation circuit 2
- Fuel feed circuit 3
- Injection pump 3
- Automatic cold injection advance device (KSB) 4
- Inertia safety switch 7
- Electronic pre-heating system for engine start-up 8
- DEGUSSA oxidising catalytic converter 9
- Burnt gas recirculation system (EGR) 10
- Checks-adjustments and repairs 15
- Checking and adjusting potentiometer position on injection pump 15
- Removing-refitting injection pump 17
- Removing-refitting glow plug control unit 25
- Checking and adjusting engine idle speed 26
- Bleeding fuel feed circuit 27
- Draining water from fuel filter 27
- Replacing fuel filter 27
- Fault diagnosis 28
- Checking exhaust smoke using opacimeter 33

Copyright Fiat Auto

FUEL SYSTEM WITH BOSCH VER - 679 PUMP

INTRODUCTION

The fuel system consists of a set of devices which introduce an air-fuel mixture into each cylinder and modulate fuel quantity in order to ensure even, efficient combustion.

FUEL SYSTEM COMPONENTS

The fuel system is divided into four main subsystems as follows:

- Air intake circuit
- Blow-by gas recirculation system
- Fuel supply circuit
- Exhaust gas recirculation circuit (E.G.R.)

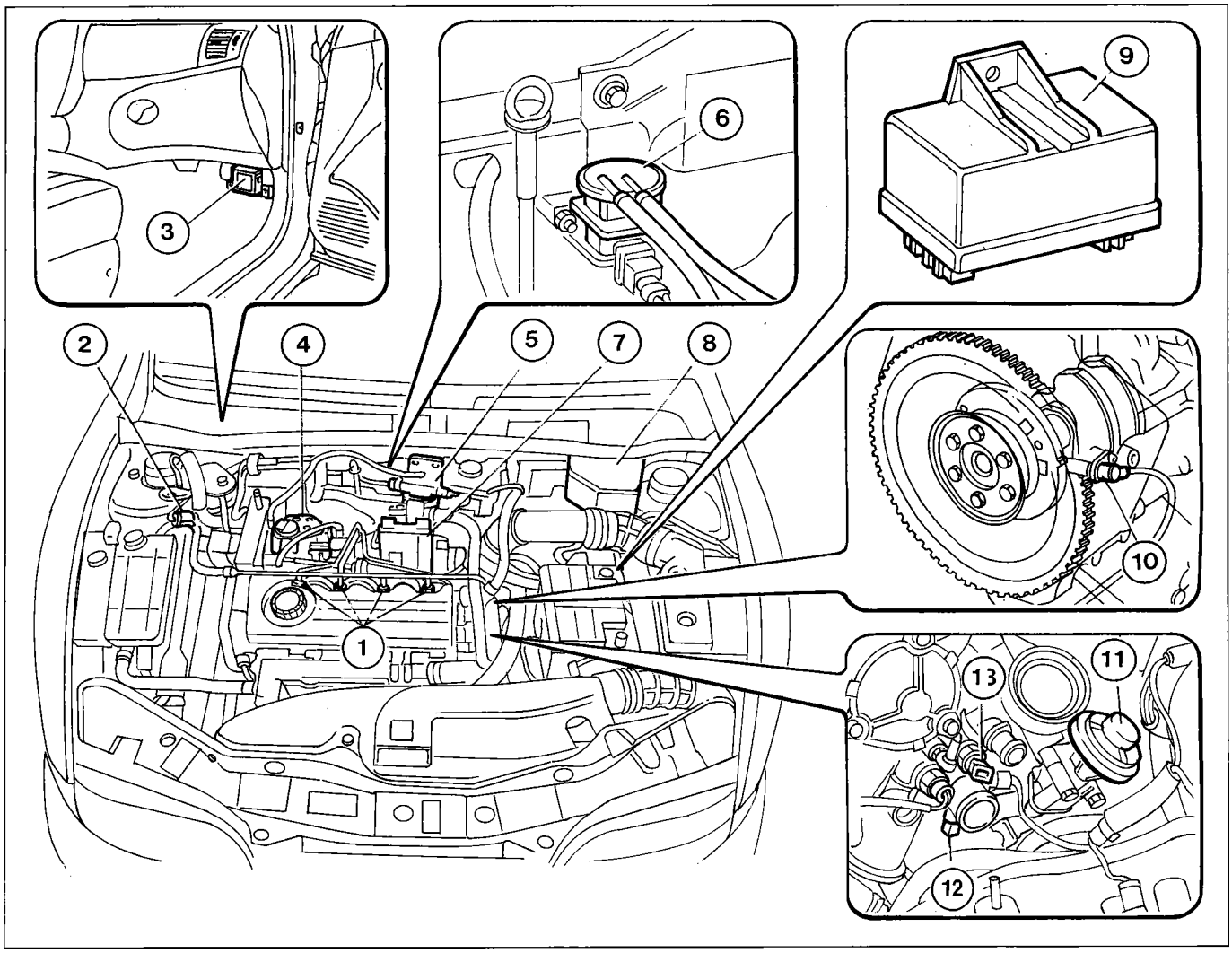

P4F01GJ01

1. Injectors
2. Diagnostic socket
3. E.G.R. system electronic control unit
4. Injection pump
5. Oil vapour separator
6. Borg Warner modulator valve
7. Fuel filter
8. Rpm sensor
9. Glow plug control unit fuse
10. Pre-heating control unit
11. E.G.R. valve
12. Coolant temperature sensor for E.G.R. control unit
13. Coolant temperature sensor for glow plug control unit

Copyright Fiat Auto

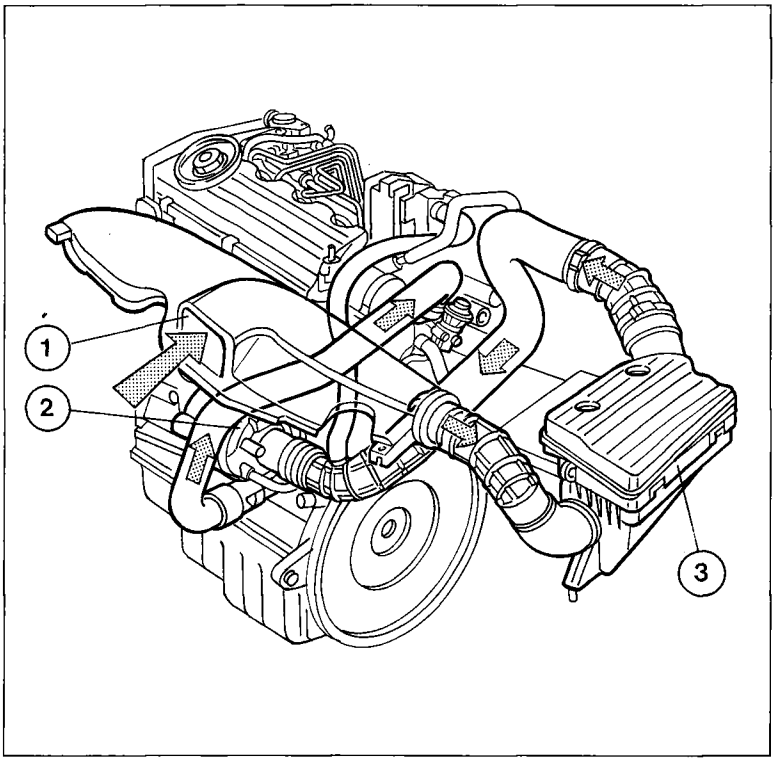

P4F02GJ01

AIR INTAKE CIRCUIT

The intake circuit is turbocharged by means of a Garret GT15 turbocharger with wastegate and maximum feed pressure of 1.05 bar.
The low inertia type turbocharger is designed in accordance with a new turbocharging concept: the turbocharger cuts in to increase torque within the most frequently used range.
Air is taken in through intake (1) and flows through filter (3) before being compressed by exhaust gas-driven turbocharger (2) and directed on to the intake manifold from which it is distributed to the cylinders.

1. Inlet fitting
2. Turbocharger
3. Air cleaner

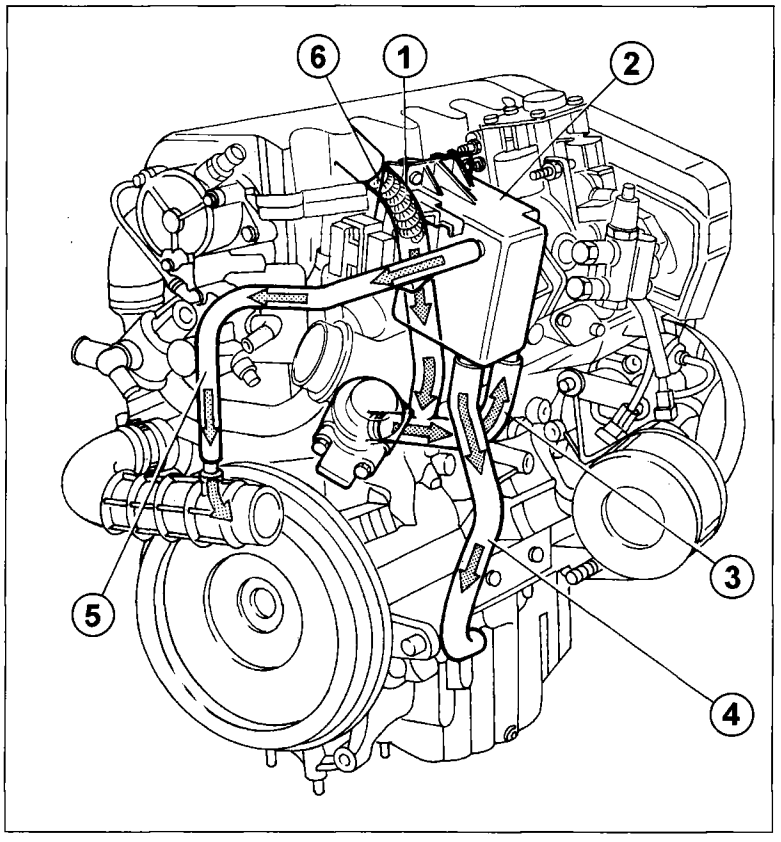

P4F02GJ02

BLOW-BY GAS RECIRCULATION CIRCUIT

Crankcase emissions consist of an air-diesel mixture, burnt gases leaking through the piston rings and oil vapours. Altogether, they are referred to as blow-by or vent gases.
Vent gases from the crankcase and cylinder head flow through line (3) to separator (2) where they are spin and lose part of their load of dissolved oil, which falls back down into the sump in the form of droplets through pipe (4).
The remaining gases flow through line (5) and are directed to the intake circuit.
The cylinder head gas outlet pipe (1) contains a flame trap (6) to prevent fires due to flashback.

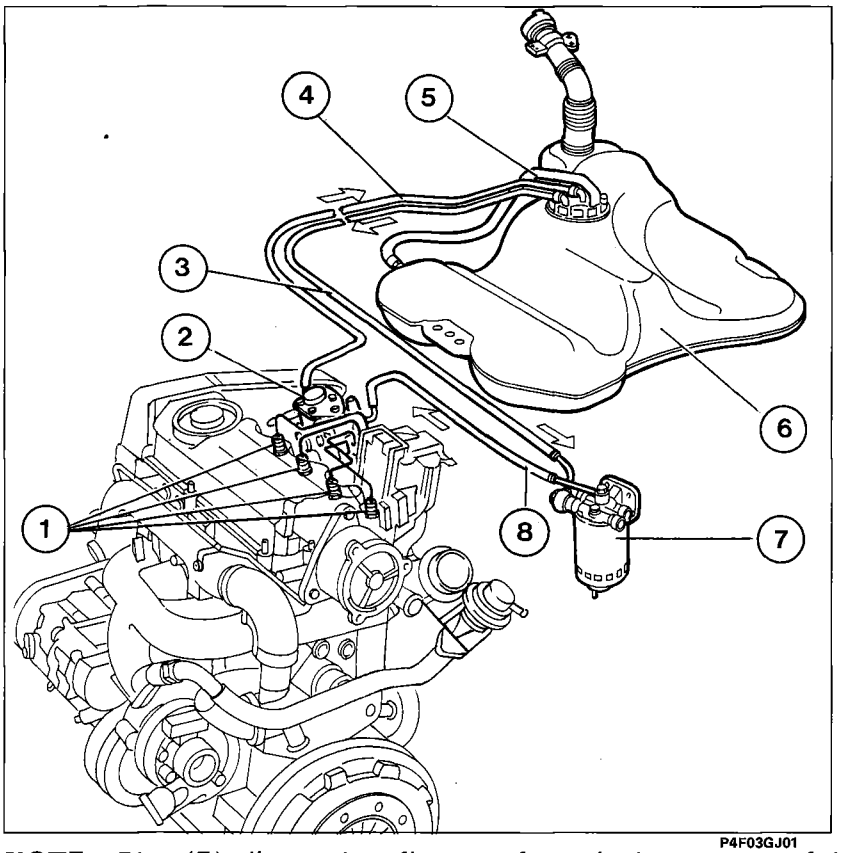

P4F03GJ01

FUEL FEED CIRCUIT

The main components of the fuel feed circuit are as follows: tank, filter, injection pump and injectors.

Fuel flows through tank (6) to injection pump (2), passing through filter (7).

Rotary injection pump (2) ensures that injectors (1) are correctly fed in the firing order 1-3-4-2.

1. Injectors
2. Injection pump
3. Delivery line from tank to filter
4. Return line
5. Vent pipe
6. Reservoir
7. Fuel filter
8. Fuel outlet line from filter to injection pump

NOTE *Pipe (5) allows air to flow out from the lowest part of the tank to ensure the entire space can be filled with fuel. Otherwise an air lock would build up at the bottom due to the shape of the tank.*

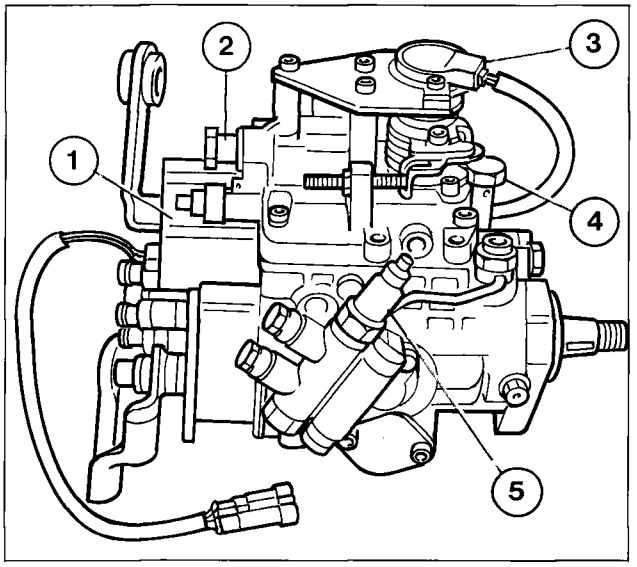

P4F03GJ02

1. Cut-out solenoid
2. Connection for diesel return line to tank
3. Throttle lever position sensor (potentiometer)
4. Connection for diesel delivery line to injectors
5. KSB device

INJECTION PUMP

The Bosch VER 679 injection pump is specially designed for indirect injection diesel engines. New pump features optimise engine operating characteristics under all service conditions.

The rotary distributor injection pump is small in size. Its structure is compact and it does not require an external lubrication system since it is continually lubricated by the filtered diesel in which it is saturated during operation.

The function of the injection pump is to meter the correct quantity of fuel precisely and inject it at high pressure into the combustion chamber of each cylinder at a specific point in the engine cycle. The metered fuel quantity is then nebulised at high pressure by the injectors.

Pressure inside the pump prevents infiltration of dust, water or other harmful foreign bodies. The special hydraulic circuit design also prevents a build-up of air.

Copyright Fiat Auto

10.

AUTOMATIC COLD INJECTION ADVANCE DEVICE (KSB)

This device advances the injection point in for more efficient running when the engine is cold.

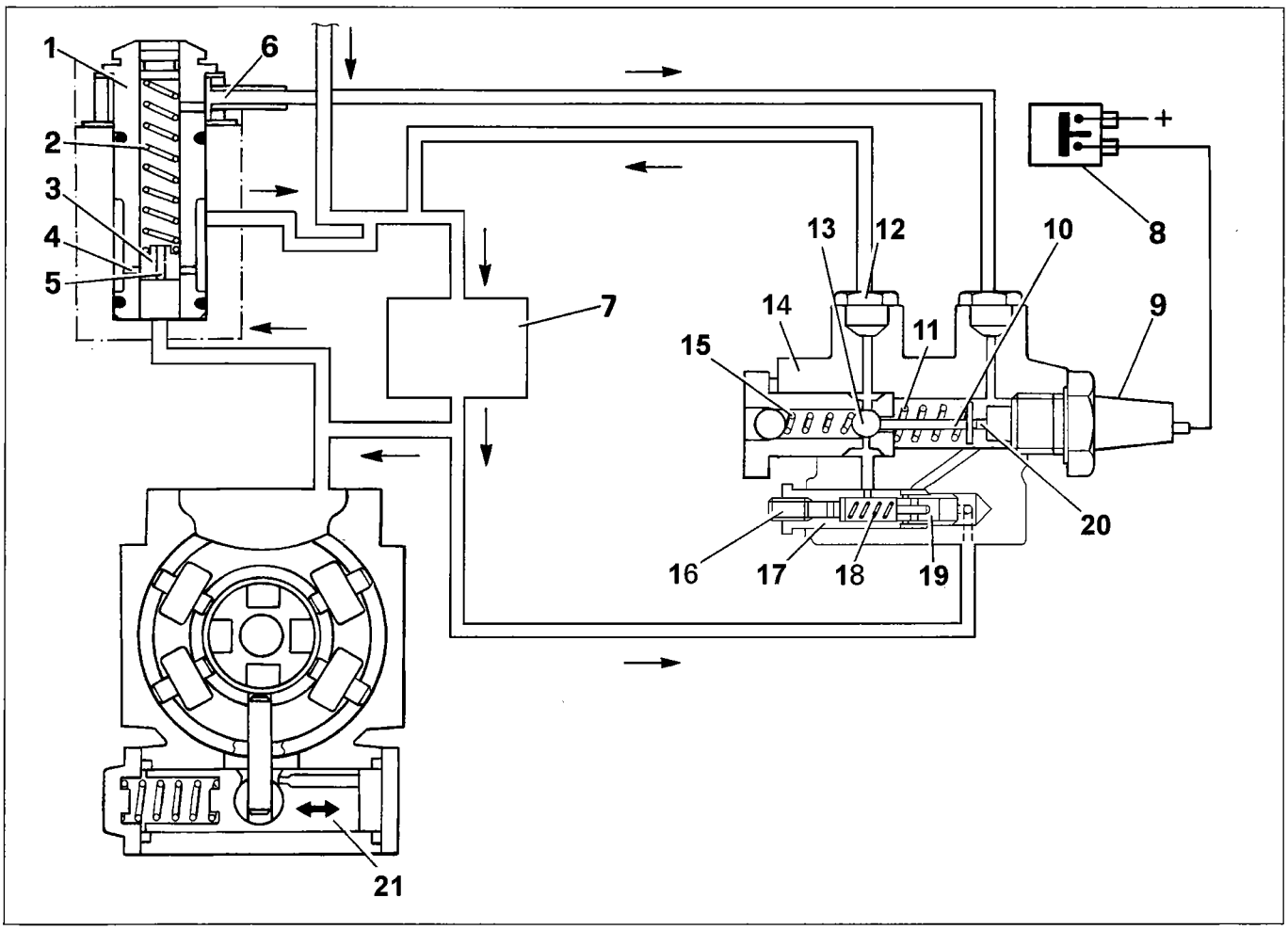

P4F04GJ01

Components of automatic cold injection advance device

1. Pressure regulation valve
2. Reaction spring
3. Piston
4. Exhaust ports
5. Piston calibrated hole
6. Port connecting valve and advance device
7. Transfer pump
8. Thermal switch
9. Wax thermal bulb
10. Ball valve control rod
11. Reaction spring
12. Exhaust hole
13. Pressure seal ball
14. Case of automatic advance device
15. Reaction spring
16. Adjustment screw
17. Supplementary regulation valve
18. Reaction spring
19. Piston
20. Thermal bulb plunger
21. Advance variator piston

OPERATION

Transfer pressure generated by volumetric pump (7), feeds the injection pump pumping elements. When the engine is warm, the injection advance should be directly proportional to rpm. This is achieved by an advance variator built into the injection pump through the operation of piston (21).
The increase in transfer pressure, proportional to engine rpm, moves piston (21) to overcome the thrust of counter spring and thus alter the injection advance angle.
Transfer pressure is regulated by valve (1): pressure acting on piston (3) overcomes the reaction of spring (2) to move the piston itself.

Movement of piston (3) brings about the opening of exhaust ports (4) to allow a proportion of the fuel to return to the intake chamber of transfer pump (7) in order to regulate feed pressure.
A KSB device has been introduced to ensure the engine runs more efficiently when cold. This is achieved by increasing the advance at low engine temperatures regardless of engine rpm.
Cailibrated hole (5) on piston (3) brings both surfaces (lower and upper) of piston (3) into communication with one another. Now that the pressures on both sides of the piston are the same, reaction spring (2) will not allow transfer pressure to be discharged through holes (4). In this way, pressure increases and thus also the advance.
Transfer pressure in duct (6) may be discharged to the pump intake when the ball valve of KSB device (14) is open or when valve (18) opens under the action of the transfer pressure.
In this case, piston (3) is free to move and regulate the transfer pressure by discharging any excess through exhaust ports (4).

Engine cold

With coolant temperatures lower than 60 ± 2 °C, the thermal contact on the thermostat is closed, the wax thermal bulb is not activated and ball valve (13) remains closed.
This inhibits regulation of transfer pressure by valve (1) because pressures on both sides of piston (3) are equal.
Transfer pressure therefore rises to a level in excess of that for normal operation. The injection advance is increased by the action of piston (21).
The supplementary regulation valve (17) restricts transfer pressure below a pre-established value; it is connected in parallel with the KSB device and allows the KSB device to be by-passed when transfer pressure acting on piston (19) overcomes the load on spring (18).

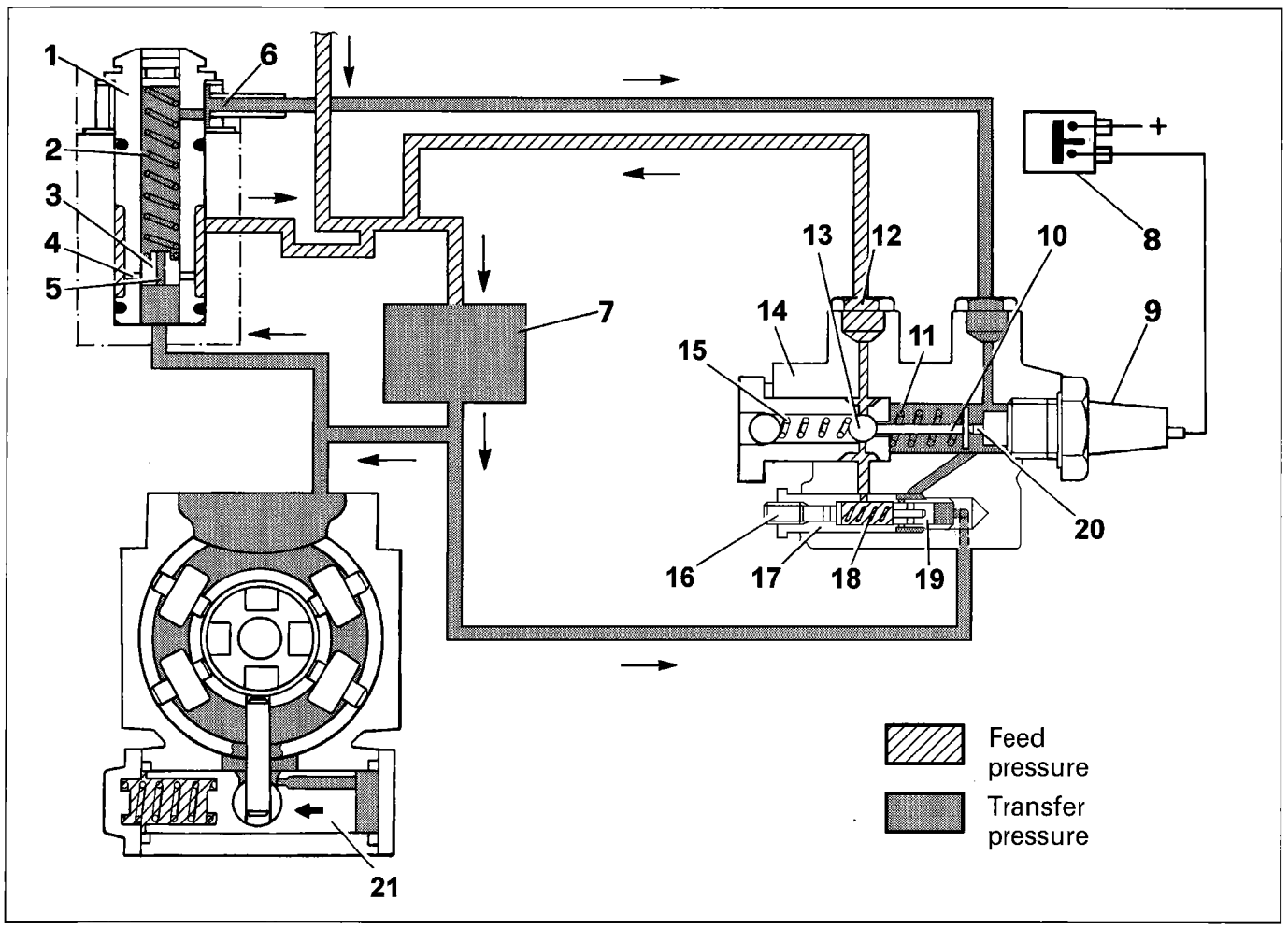

P4F05GJ01

Engine warm

When coolant temperature rises to 60 °C ± 2 °C, the thermal contact on the thermostat case closes to activate the wax thermal bulb (9) on the KSB advance control device. The bulb begins to heat up and the wax expands to push out plunger (20), which moves ball valve (13) from its seat by means of rod (10).

Valve (13) opens to drain off the excess pressure set up inside the injection pump through duct (6) and internal channel (12). The piston of advance variator (21) therefore returns to its original position to cancel out the increase in advance and restore normal operating advance settings.

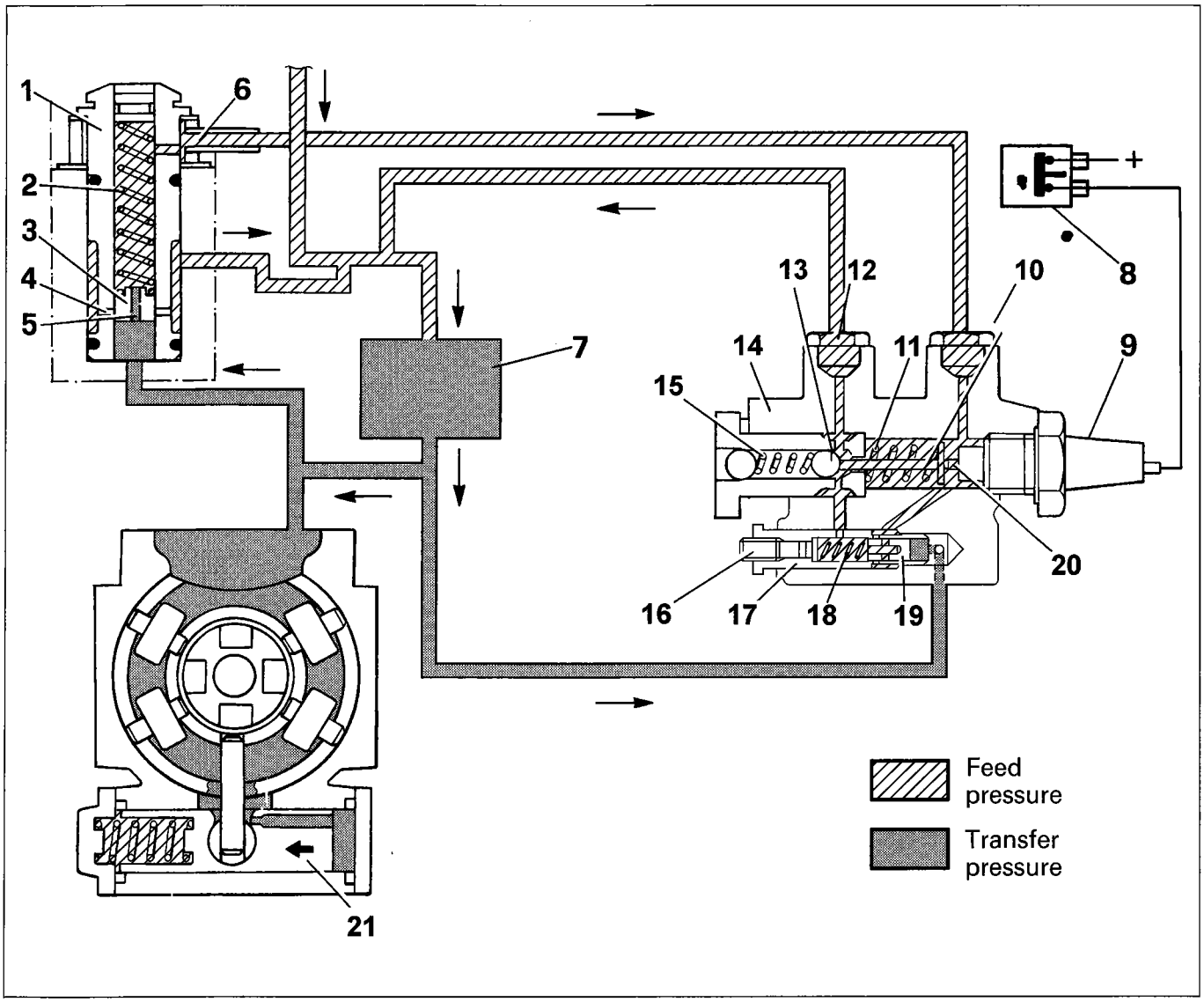

P4F06GJ01

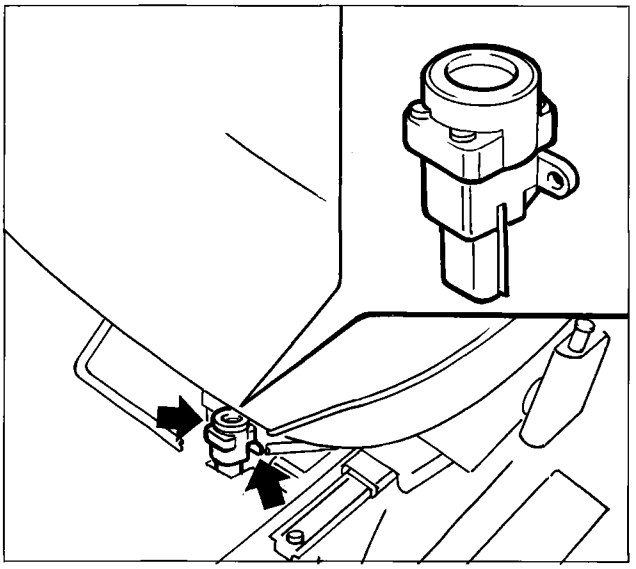

P4F07GJ01

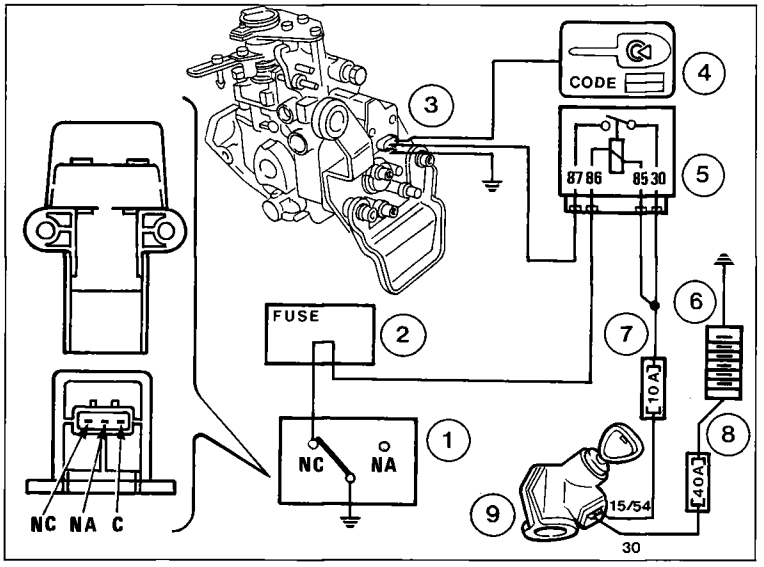

P4F07GJ02

1. Inertia switch
2. Junction unit
3. Engine cut out solenoid on injection pump
4. FIAT CODE control unit
5. Relay
6. Battery
7. Cut-out solenoid fuse
8. Master fuse (IGN)
9. Ignition switch

C= Common terminal
N.C. Normally closed
N.A. Normally open

INERTIA SAFETY SWITCH

Foreword

The vehicle is fitted with an inertia switch located inside the cabin to increase the safety of occupants during collisions.
This sensor reduces the possibility of fire (due to emerging fuel) by cutting off the earth connection of the engine cut-out solenoid relay excitation circuit on the fuel pump.

Principle of operation

A steel ball fitted inside a tapered housing is normally held in locked position through the attractive force of an adjacent magnet. In the case of specific acceleration loads, the ball is released from the magnetic attraction and gradually emerges from the tapered mount, following an upward movement according to cone angle.
A quick-release mechanism above the ball makes up a normally closed (N.C.) electrical circuit. When the mechanism is struck by the ball, it changes position from an N.C. circuit to a normally open circuit (N.A.) and thus breaks the earth connection of the relay supplying the engine stall solenoid on the injection pump

In the case of a violent collision, the ball breaks loose from the magnetic attraction and opens the normally closed electrical circuit (N.C.). This in turn breaks the earth connection of the excitation circuit of the relay supplying the engine cut-out solenoid.

To reset the circuit earth connection, push back the seat and press the switch until it clicks on.

After even an apparently light collision, if a smell of petrol is noted or fuel leaks are seen, do not activate the switch again until the fault has been found and corrected in order to avoid the risk of fire.
If no leaks are noted and the vehicle is able to start, press the button to re-activate the earth connection to the exitation circuit of the relay supplying the engine cut-out solenoid on the injection pump.

Copyright Fiat Auto

ELECTRONIC PRE-HEATING SYSTEM FOR ENGINE START-UP

The electronic preheating control system consists of:

- An electronic control unit in the engine bay beneath the battery tray;
- four glow plugs located in the cylinder head combustion prechamber;
- a start-up wait warning light located on the instrument panel.
- a coolant temperature sensor located on the thermostat case.

The system is designed to perform the following functions:

1. Supply a high preheating current from the battery to the glow plugs before and after engine start-up for a variable amount of time depending on coolant temperature.
   The preheating function increases combustion prechamber temperature to levels which will facilitate fuel self-ignition and thus make starting easier.
2. Keep the glow plug warning light on for a varying amount of time depending on coolant temperature: from 1.5 - 4.5 seconds at 40 - 80 °C up to a maximum of 30 - 35 seconds at -30°C.
   Then engine may be started up when the warning light goes off.
3. If the engine is not started up after the warning light goes off, the electronic control unit supplies the glow plugs for a further 10 seconds (maintenance time).
4. After starting up the engine, the control unit continues to supply the glow plugs for a variable amount of time depending on coolant temperature (post-heating time). This time may vary from a maximum of 200 seconds for temperatures lower than 10°C down to a minimum of 0 seconds for temperatures higher than 80°C.
5. If one of the glow plugs or its supply lead short circuits (absorption higher than 240A), the control unit immediately cuts off the current supply.

   If the absorption is between 140 and 240 A, the preheating control unit cuts off the glow plug power supply after 5 - 6 seconds.

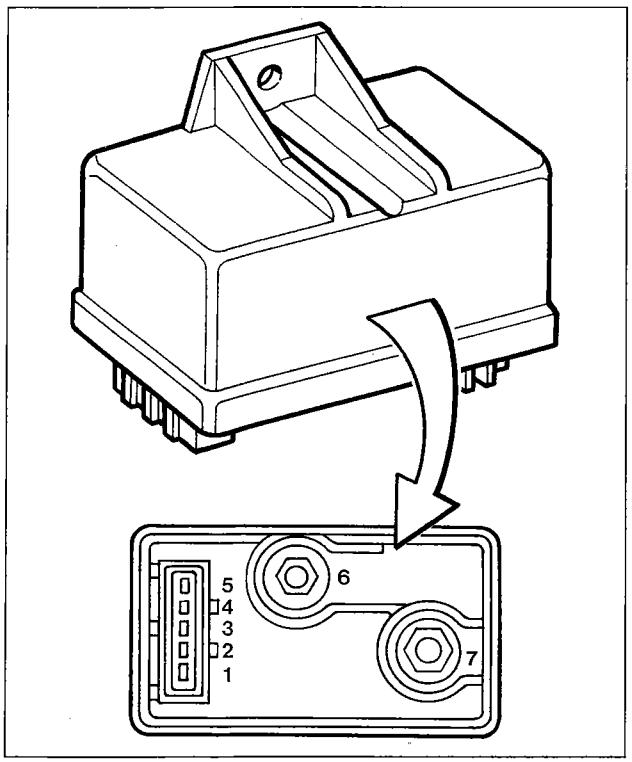

P4F08GJ01

6. If the coolant temperature sensor and/or its circuit are defective, the control unit adopts the following measures:

   - fixed preheating time of 22 - 23 seconds;
   - fixed post - heating time of 200 seconds;
   - fault indicated by the warning light flashing for 60 seconds.

Connections:

1. Vehicle earth
2. Coolant temperature sensor
3. Ignition switch (+ 15)
4. Ignition switch (+ 50)
5. Warning light
6. Heater plugs
7. Battery positive (+ 30)

EMISSION CONTROL DEVICES - DEGUSSA OXIDISING CATALYTIC CONVERTER

The oxidizing catalytic converter is a simple, effective post-treatment device. It oxidizes CO, HC and particulate and converts them to carbon dioxide (CO_2) and steam (H_2O).
The barrel-shaped Degussa converter consists of a ceramic honeycomb block with its chambers impregnated with platinum, a catalyst of oxidation reactions. The total volumetric capacity is equal to 600 cm^3 with a density of 400 chambers per square inch.
Exhaust gases flowing through the chambers heat up the catalyst and trigger the conversion of pollutants to inert compounts.
The chemical oxidation of CO, HC and particulate occurs at temperatures of more than 200°C. It is not, however, advisable to exceed 350°C because at this temperature the sulphur in the diesel begins to oxidize and give rise to sulphur dioxide (SO_2) and trioxide (SO_3) responsible for acid rain.
If the catalytic converter is the correct size, temperature is kept down while achieving maximum conversion of polluting emissions and restricting the oxidation of sulphur compounds.
The catalytic converter also deals with saturated hydrocarbons and aromatic hydrocarbons in particulate, namely carbon (soot), metals, water and sulphur compounds, are eliminated in exhaust emissions.
The efficiency of reduction of individual pollutants is as follows:
- 50% for CO,
- 50% for HC,
- 35% for particulate.

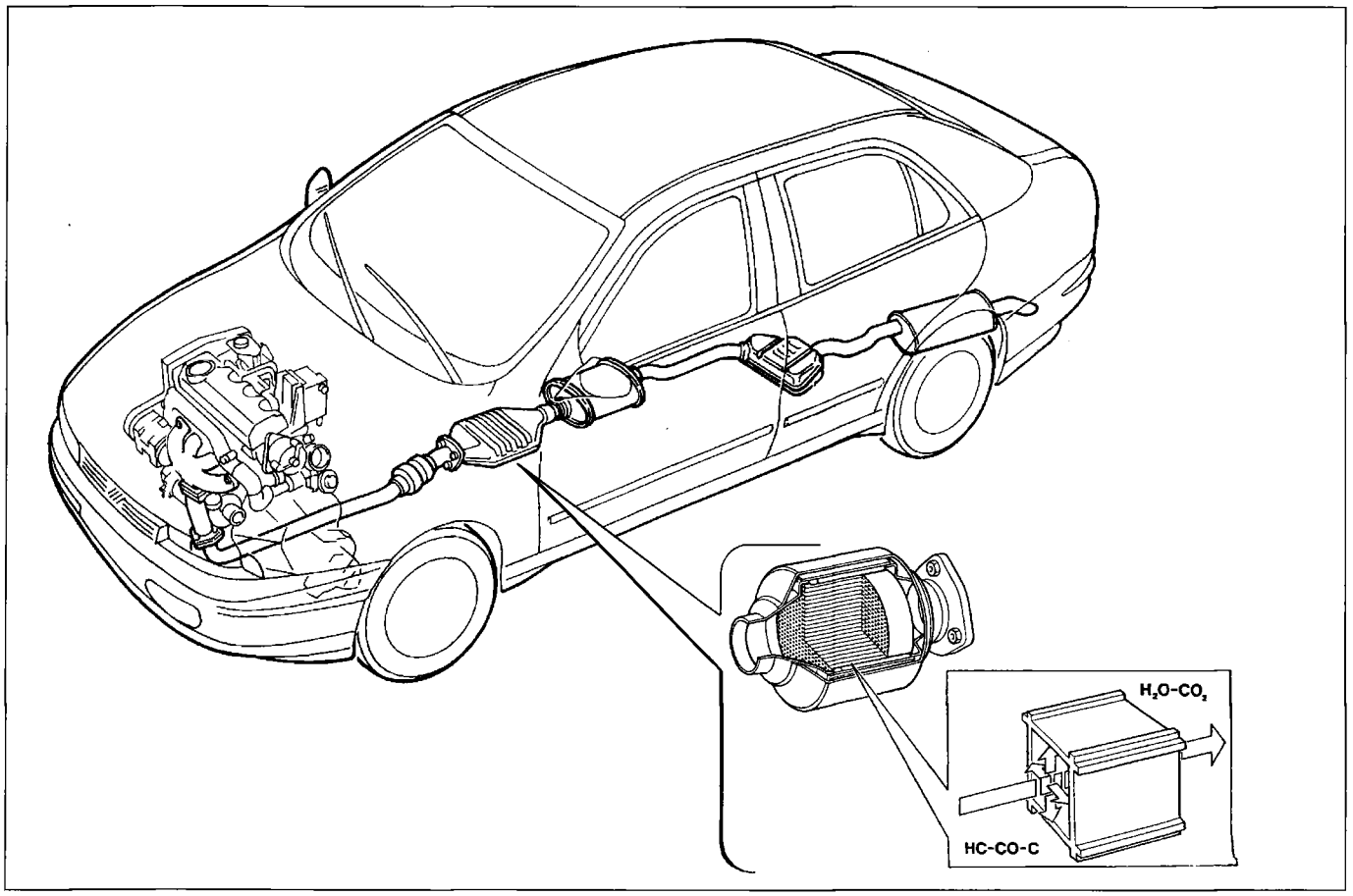

P4F09GJ01

Engine exhaust assembly with DEGUSSA 2 oxidising catalytic converter fitted on vehicle

The box shows the DEGUSSA oxidizing catalytic converter and the way it is fitted to the engine exhaust pipe

EXHAUST GAS RECIRCULATION SYSTEM E.G.R.

Introduction

This system permits a proportion of exhaust gases (5 - 15%) to be directed to the intake under certain engine operating conditions.
This action dilutes the fuel mixture with inert gases to lower peak temperature in the combustion chamber. This minimizes the formation of nitrogen oxides (NOx), to produce a reduction of 30 - 50% at the exhaust.
Exhaust gas recirculation is possible only at medium-low loads when the air-fuel mixture is very high and engine operation is not affected by the presence of inert gases in the place of air.
The recirculation system is controlled by an ECU (1) that receives signals from a potentiometer on accelerator lever (2) and from rpm sensor (3) and coolant sensor (4). It then sends out a command signal to the Borg Warner modulating solenoid responsible for EGR control. (6).
The solenoid, connected to the atmosphere via a filter, relays a greater or smaller vacuum from the vacuum pump of brake servo (5) to the Pierburg EGR valve (7) on the basis of the command signal received. If the vacuum is sufficient, this valve opens to establish communication between the exhaust manifold and the inlet manifold.
The amount of recirculated gas can therefore be altered by adjusting the opening of the Pierburg EGR valve in continuous manner, consulting memory maps of opening levels on the basis of signals received.

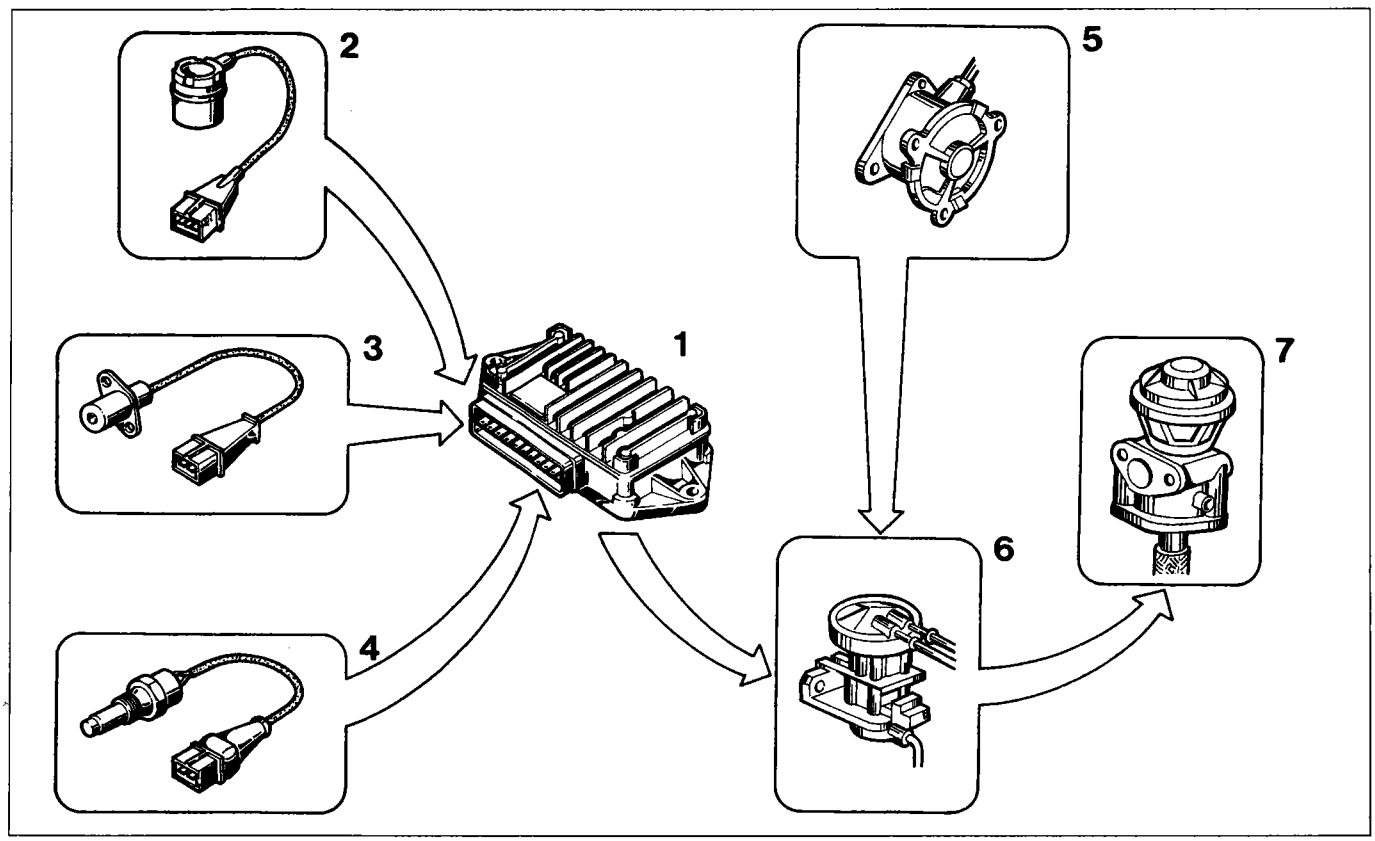

P4F10GJ01

Components of EGR system

1. Electronic control unit
2. Accelerator lever potentiometer on injection pump
3. Rpm sensor
4. Coolant temperature sensor
5. Vacuum pump for brake servo
6. Borg Warner modulator solenoid controlling EGR
7. E.G.R. valve.

OPERATION OF EXHAUST GAS RECIRCULATION SYSTEM COMPONENTS

Electronic control unit

The electronic control unit is identified by the code MCR 109A for vehicles fitted with an air conditioner and by the code MCR 108A for vehicles without an air conditioner (only heated).

This digital microprocessor unit receives data on engine service conditions that are sent in by the three engine load sensors (accelerator lever position sensor, rpm sensor and coolant sensor).

On the basis of these signals, ECU (C) is able to govern the modulator solenoid using a square wave signal on the basis of its intèrnal EGR maps.

The mapping is represented by level curves. Vacuum values in mmHg (A) alter according to accelerator lever position and rpm.

A temperature correction is made at a later stage, again by the control module. This correction (B) corresponds to a zeroing of intensity values for temperatures less than 20°C, and a reduction ranging linearly from 100% to 0% for temperatures from 20°C to 80°C. For coolant temperatures in excess of 80°C, no solenoid control current corrections are made.

If the vehicle is fitted with an air conditioner, the control unit is also interfaced with the heating/ventilation system. In the case of maximum power demand, recorded by the accelerator lever position sensor, it cuts off the supply to the compressor electromagnetic coupling.

The control module also includes a connector for the Fiat-Lancia Tester serial output. During maintenance, this can be used to detect any operating faults.

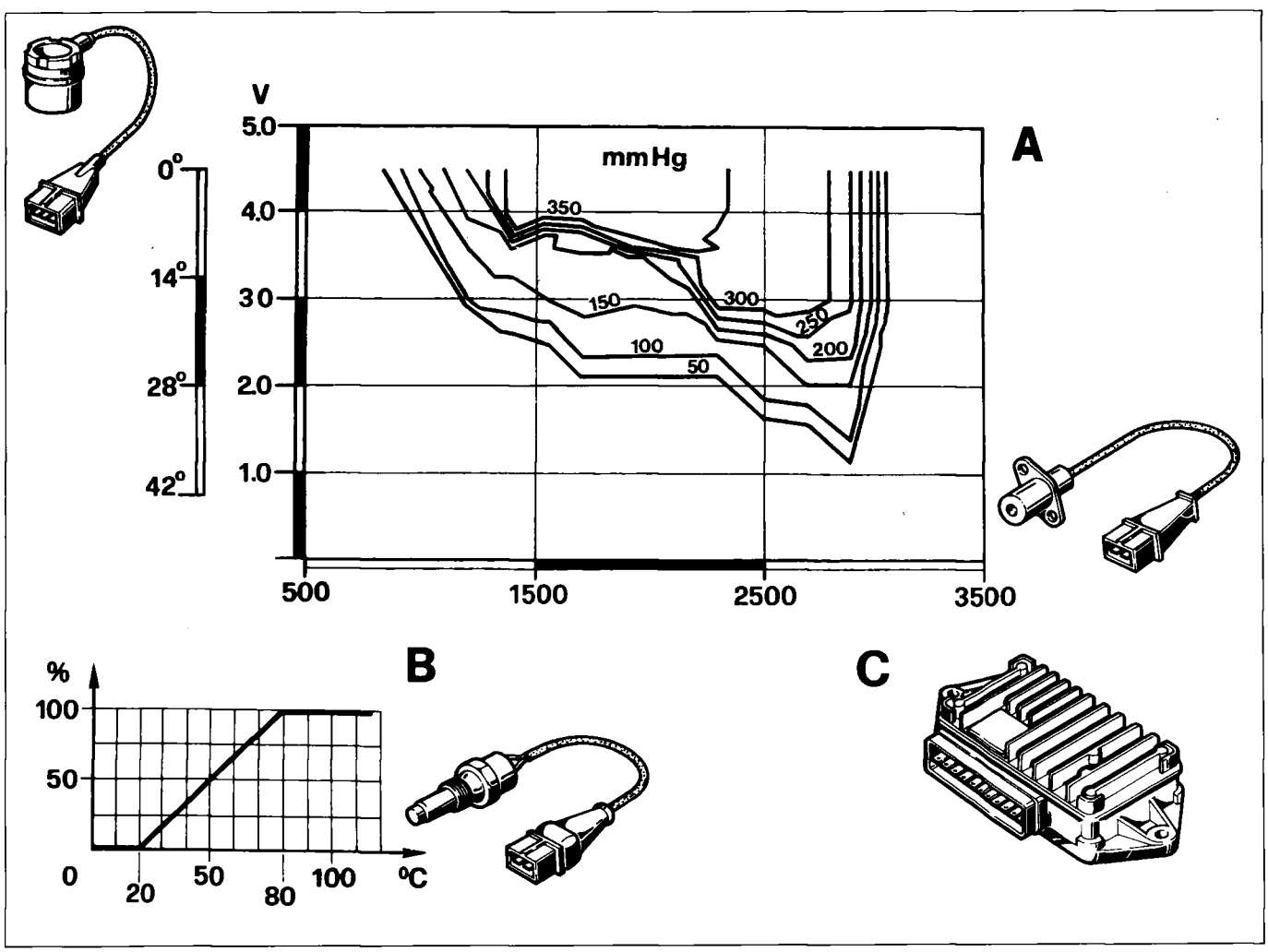

P4F11GJ01

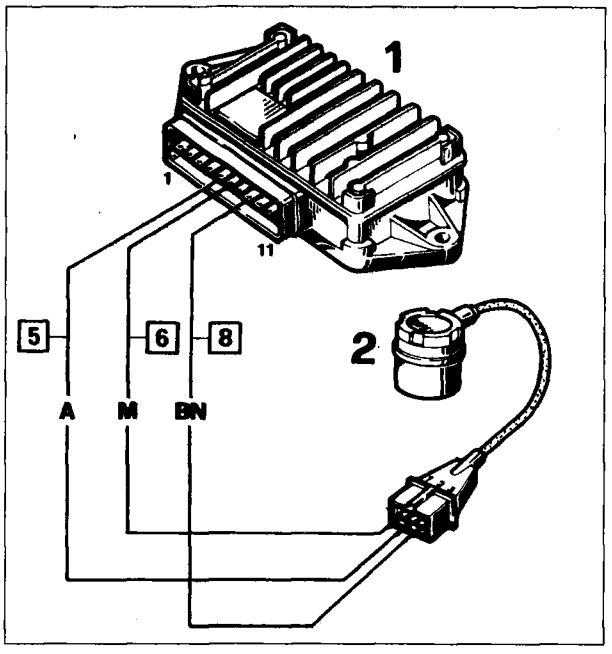

P4F12GJ01

Accelerator lever potentiometer on injection pump

Potentiometer (2) fitted to the injection pump measures accelerator lever angular position and informs ECU (1) about engine load.

Lever rotation alters potentiometer internal resistance. For a constant power supply of 3.7 ± 0.2 V supplied by the ECU, therefore, an output voltage ranging from 3.1 V when idling, to 1 - 1/4 V upon maximum load (3) is obtained.

This voltage represents a significant engine operating data item and is used by the ECU to control opening of the EGR Pierburg valve.

Rpm sensor

The rpm sensor (2) fitted to the crankcase by a phonic wheel fitted to the crankshaft is a passive electromagnetic recorder with a gap of 0.25 - 1.3 mm between the top of the ring gear teeth and the winding.

Each time a tooth of the ring gear passes it, the sensor produces a sinusoidal wave form voltage signal that varies in amplitude and frequency according to engine rpm (case A).
ECU (1) stabilizes positive half-wave amplitude and cuts out the negative half-wave (case B).

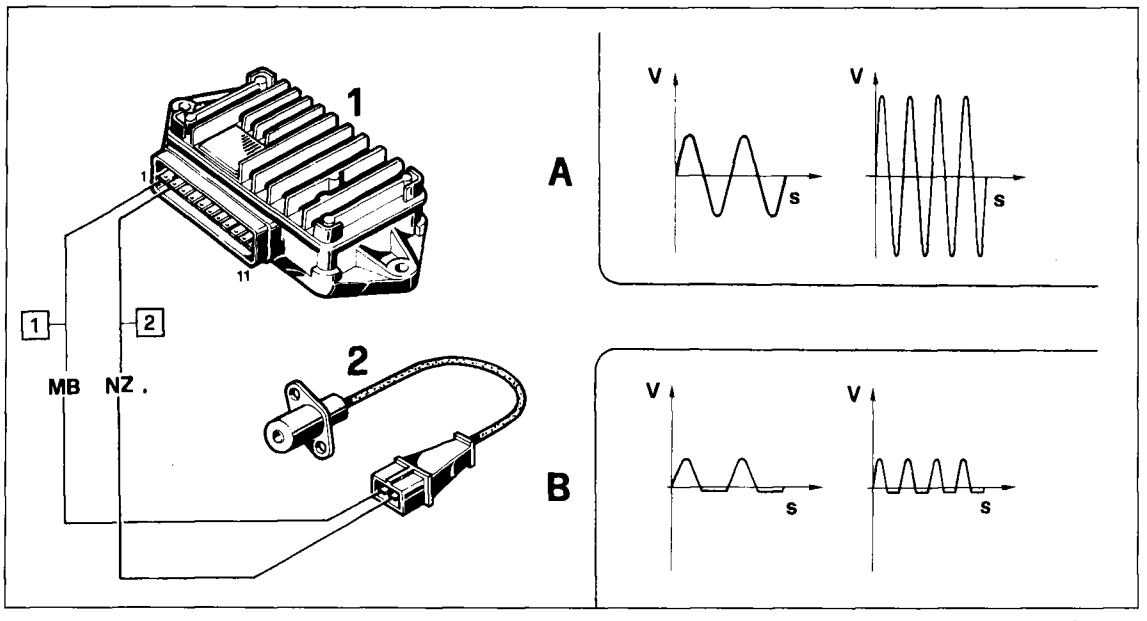

P4F12GJ02

Coolant temperature sensor

The sensor, fitted to the thermostat case, consists of an NTC resistance that alters its resistance value in inverse proportion to temperature, as shown in the diagram (3).

ECU (1) supplies NTC sensor (2) according to the resistance value, and measures coolant temperature on the basis of temperature changes proportional to the intensity of the current flowing through the sensor in order to correct modulator solenoid commands.

This prevents the engine taking in an excessive amount of exhaust gas before optimal service temperature has been achieved, or when very severe weather conditions prevent this occurring.

This sensor therefore ensures safe engine operation during the stage following start-up by preventing a drop in the intake oxygen load. This ensure the best possible conditions for combustion while the engine is warming up.

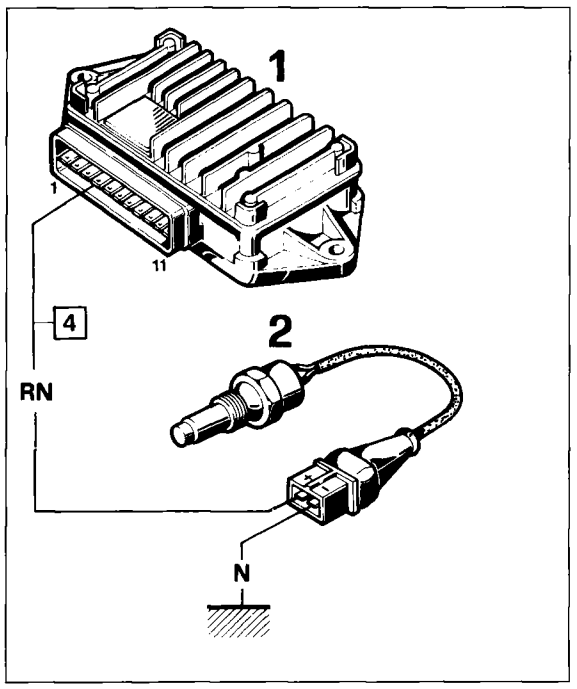

P4F13GJ01

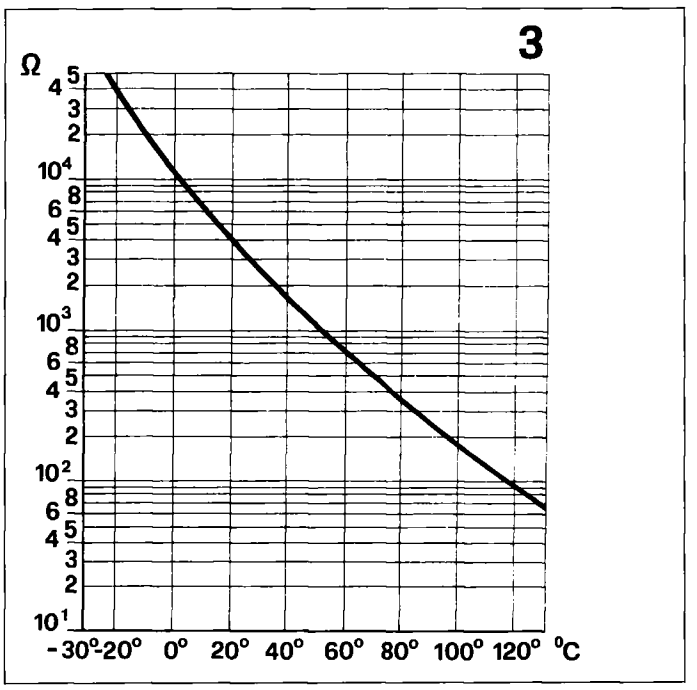

P4F13GJ02

Borg Warner modulator solenoid

The Borg Warner solenoid (2) is fitted in the rear part of the engine bay, in a vertical position on the bulkhead that separates engine from passenger compartment.
It is connected to the EGR pneumatic system with a vacuum connection from the brake servo vacuum pump (4), with an output to be connected to Pierburg EGR valve (3) and two atmospheric pressure points that take in air from a filter (5).
The solenoid is governed directly by ECU (1) with a square wave signal with frequency 140 Hz, voltage 12 V and variable Duty-Cycle.
The term Duty-Cycle denotes the ratio between time when signal is 12 V and total cycle period (1/140 s).
It should be noted that modulated voltage does not depend on the input vacuum level but only on the Duty-Cycle of the electrical control signal.

Copyright Fiat Auto

Diagram showing electropneumatic system

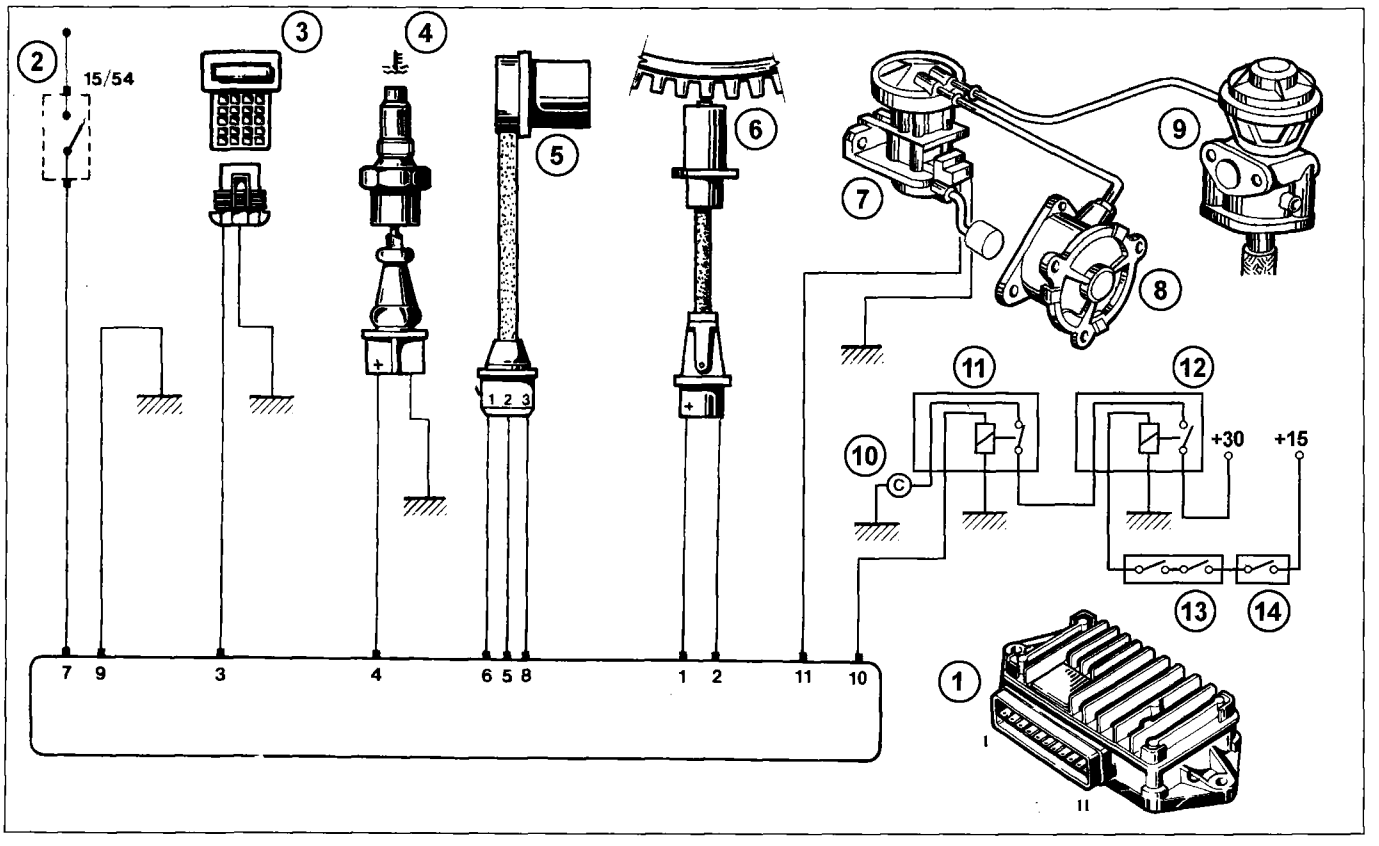

P4F14GJ01

1. E.G.R. control unit.
2. Ignition switch
3. Diagnostic socket
4. Coolant temperature sensor
5. Accelerator lever potentiometer
6. Engine rpm sensor
7. Borg Warner modulator solenoid
8. Vacuum pump for brake servo
9. E.G.R. valve.
10. Air conditioner compressor
11. Relay (Normally closed)
12. Relay (Normally open)
13. Three stage pressure switch
14. Defrosting sensor

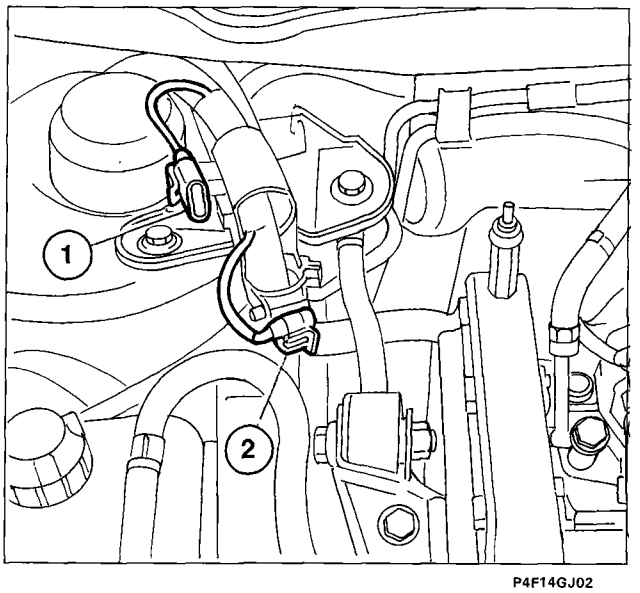

P4F14GJ02

Tester socket

The following connectors for connection with the Fiat/Lancia Tester (F.L.T.) are located on the right rear of the engine bay:

1. Emergency start-up point connected to the Fiat CODE system (refer to section 55).
2. E.G.R. system tester point.

Connector (2) allows serial communication between the E.G.R. control unit and Fiat Lancia Tester to carry out full system electronic diagnosis.

CHECKS - ADJUSTMENTS AND REPAIRS

Full electronic diagnosis of the **E**.G.R. device can be carried out using a Fiat/Lancia Tester.
Connect the Fiat/Lancia Tester to the control unit as follows:

1. Connect the Fiat/Lancia Tester to an ADT 101A adaptor and M11-B module.
2. Supply the Tester through the cigar lighter or by connecting it directly to the battery (a special lead is provided for this purpose).
3. Connect the Tester socket to the test point.

CHECKING AND ADJUSTING POTENTIOMETER POSITION ON INJECTION PUMP

Foreword

Carry out the following operations on the vehicle after making a braid (if one is not available) to be fitted between the control unit-potentiometer connection lead connectors in order to record voltage at the potentiometer terminals in parallel, and a 12 mm feeler gauge to be fitted between the tab on the rpm control lever and the stop screw. (see details on following pages).
Specifications for making the two parts are given below.

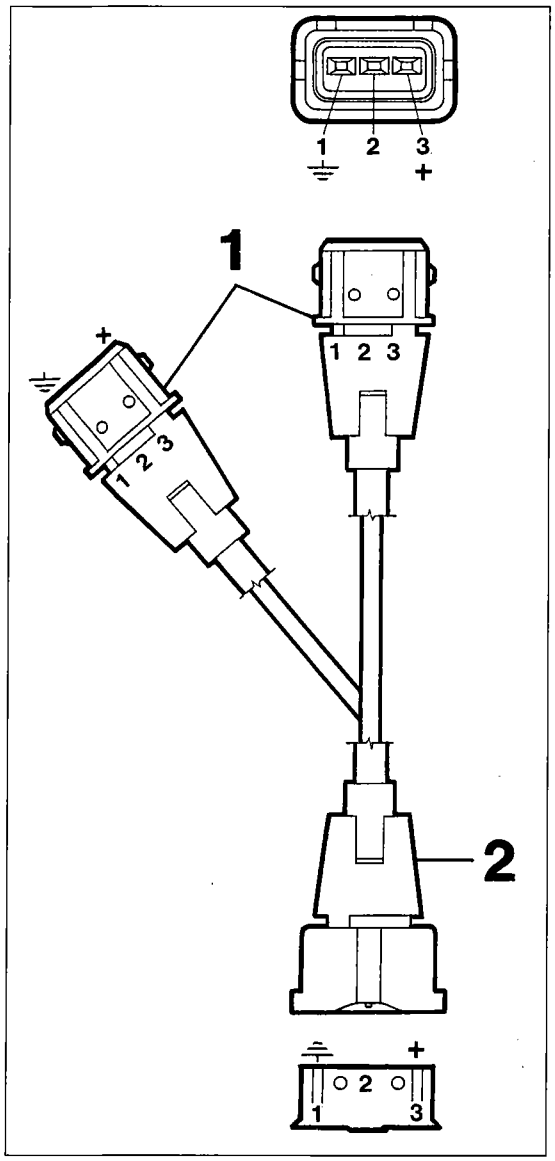

P4F15GJ01

Connection braid

1. Bosch minitimer connector N° 1254487003
   Cap N° 1280703022
   Contacts N° 1280703022
2. Bosch minitimer connector N° 1284485112
   Cap N° 1280703022
   Contacts N° 1/23341/44

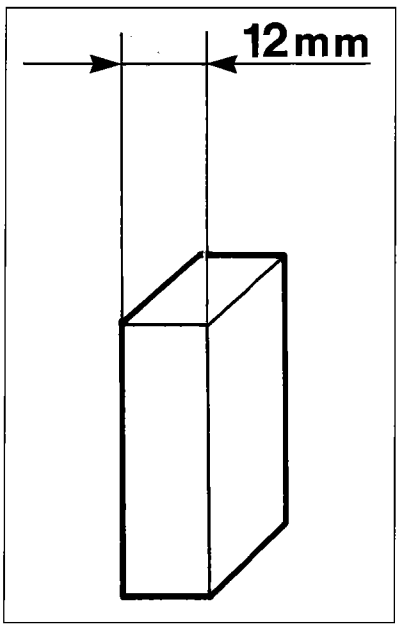

P4F15GJ02

Feeler gauge

Checking and adjustment procedure

The following operations are carried out on the vehicle after checking that engine speed is correct (850 ± 50 rpm). Also check that the battery voltage is about 12.50 V (with the engine off).

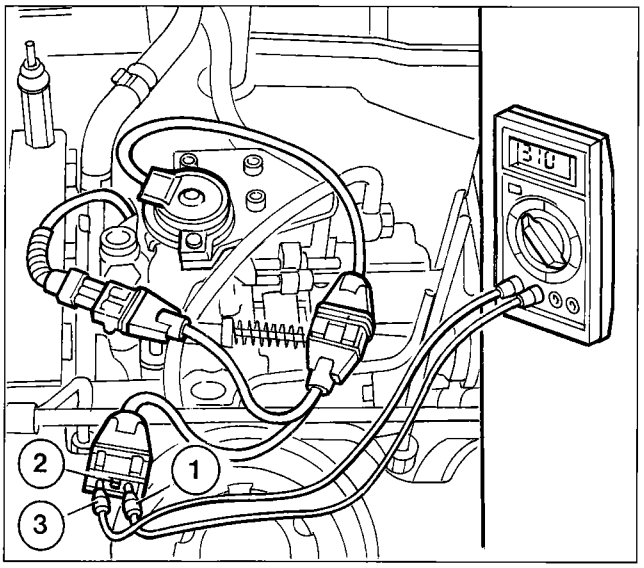

P4F16GJ01

1. Connect the braid for recording voltage in parallel between the control unit-potentiometer lead connectors

2. Supply the control unit by turning the ignition to MAR.
   Use a digital voltmeter (with centesimal resolution) to measure the supply voltage by connecting the + to terminal 3 and the - (earth) to terminal 1.
   Voltage should be 3.70 ± 0.2 V.
   If voltage is not as specified, check for and eliminate any false contacts, breaks in the wiring and short circuitslf the voltage is still not correct, replace the electronic control unit.

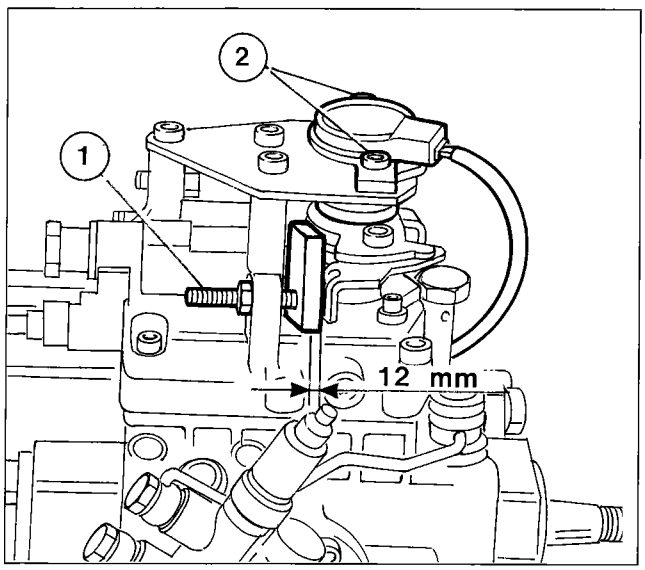

P4F16GJ02

3. Connect a digital voltmeter between potentiometer terminals 1 (earth) and 2 (positive central connector) and check that output voltage is:
   - with accelerator control lever in idling position 0.20 +0.3/-0.05 V
   - with a 12 mm spacer interposed between the accelerator control lever tooth and third detent screw 0.90 ± 0.1 V

   If the measured voltages are not as specified, proceed as follows to ensure the potentiometer is correctly positioned:
   - loosen both screws (2) retaining the potentiometer to the support bracket;
   - turn the potentiometer through an angle clockwise or anticlockwise until the correct output voltage is displayed (terminals 1 and 2).
   - tighten both potentiometer retaining screws;
   - after tightening the screws, recheck the output voltage.

After positioning the potentiometer, turn the rpm adjustment lever slowly from MIN to MAX position and simultaneously check output voltage (terminals 1 and 2), which should gradually increase from 0.2 to 3.5 ± 0.2 V.

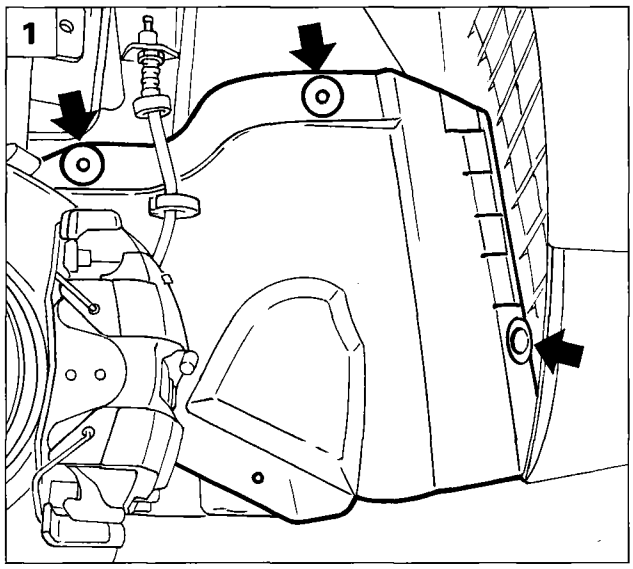

P4F12EX01

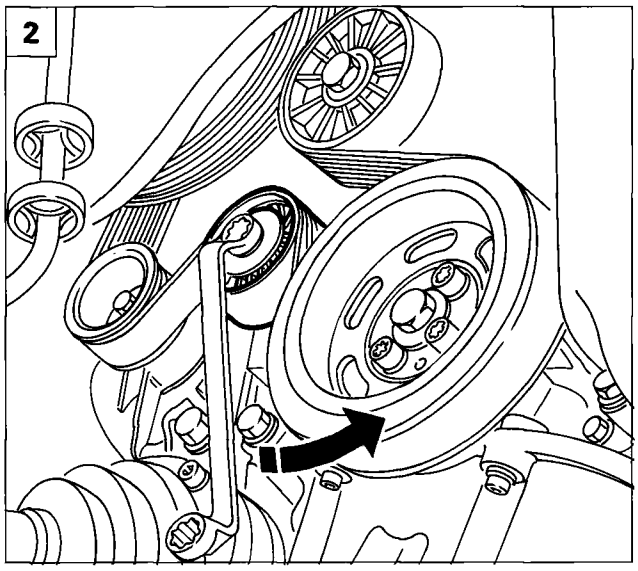

P4F17GJ01

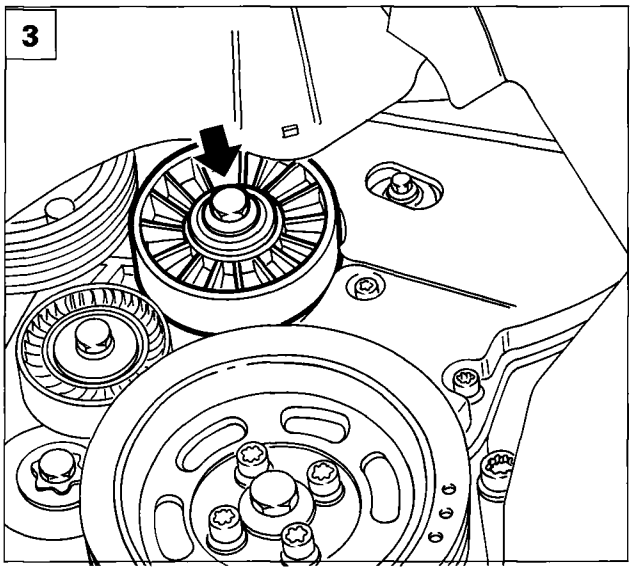

P4F17GJ02

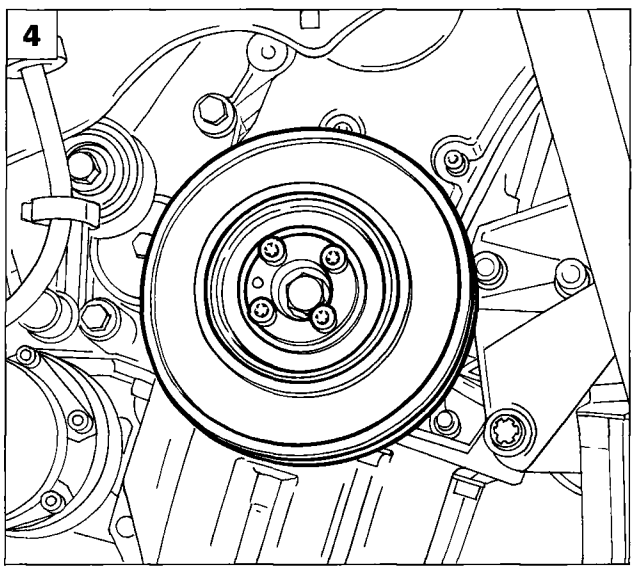

P4F14EX01

REMOVING-REFITTING INJECTION PUMP

Removing

Position the vehicle on a lift, remove the right front wheel, disconnect the battery negative lead and then proceed as follows.

1. Remove the wheel arch lining by undoing the retaining bolt shown and use tool 1870077000 to prise up the plastic stud.
2. Turn the tensioning device in the arrowed direction, release the tension in the auxiliary drive belt and then remove.
3. Remove the auxiliary drive belt to allow removal of the timing belt cover.
4. Remove the auxiliary drive pulley on the crankshaft.

Copyright Fiat Auto

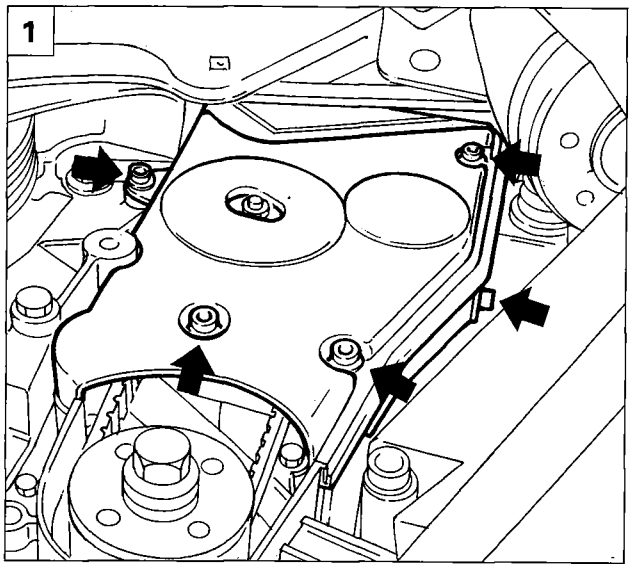

P4F14EX02

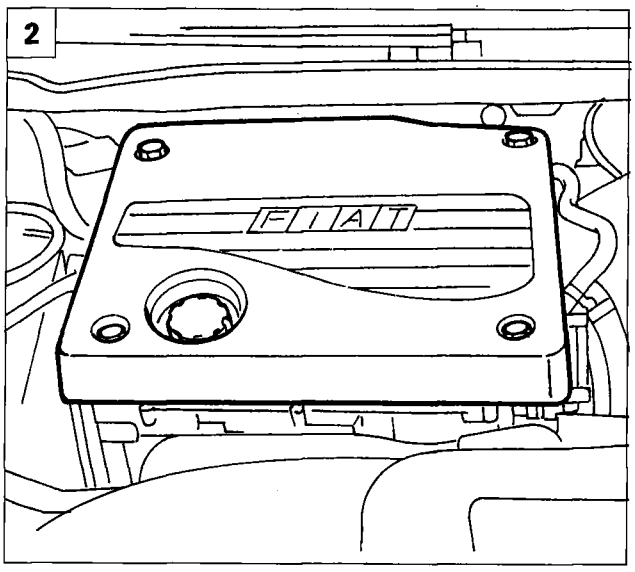

P4F01EX01

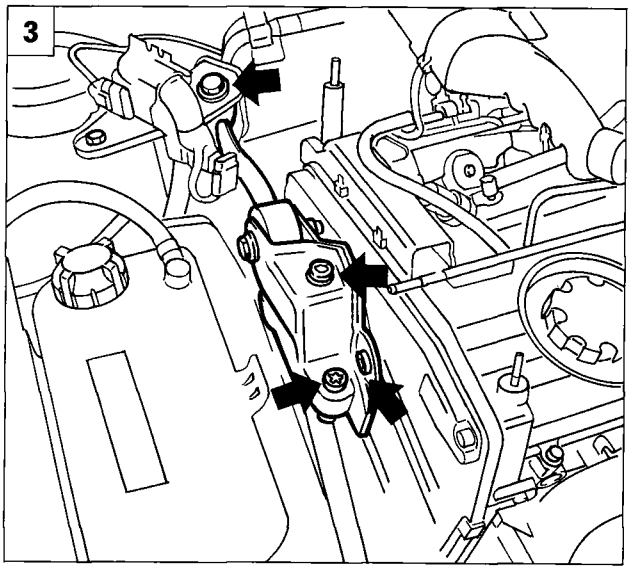

P4F06EX05

1. Remove the lower timing belt cover.
2. Remove the upper engine protection.
3. Unscrew the retaining bolts shown and then remove the reaction rod with mounting bracket.
4. Remove the upper timing belt cover.
5. Loosen the tensioning device nut shown, release belt tension and remove belt.

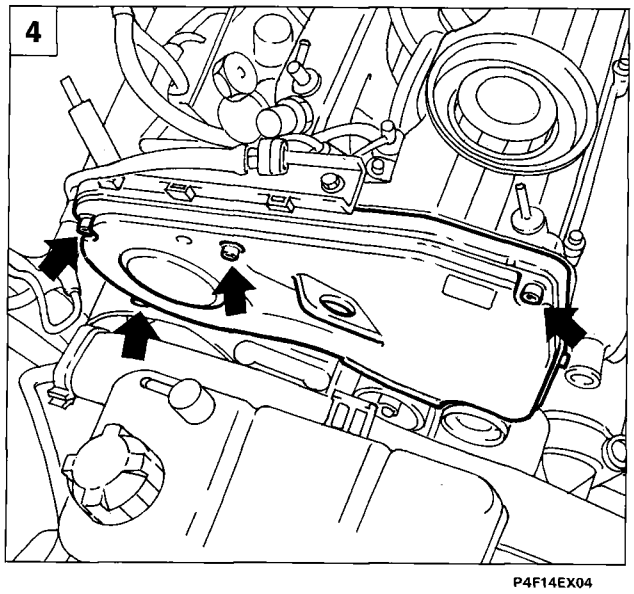

P4F14EX04

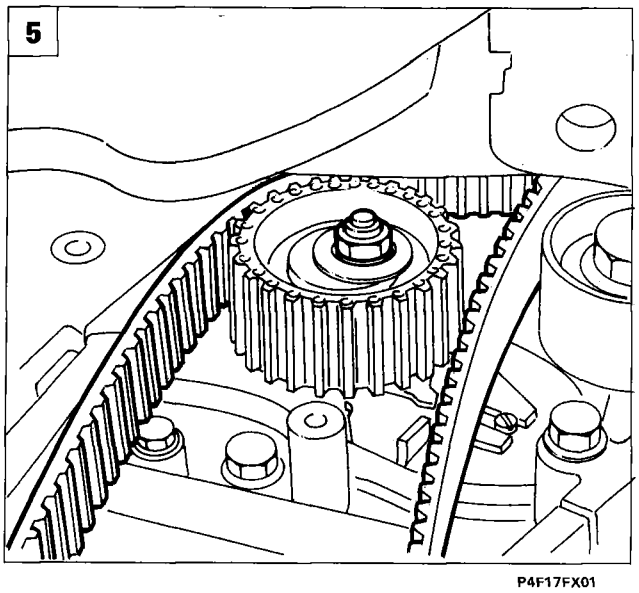

P4F17FX01

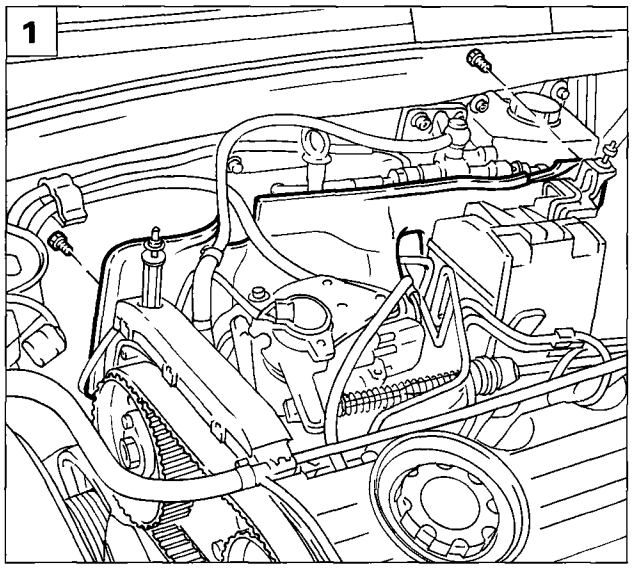

P4F19GJ01

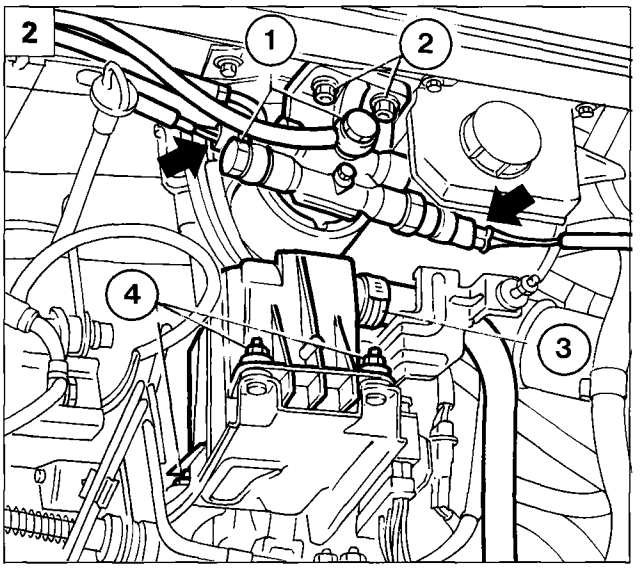

P4F19GJ02

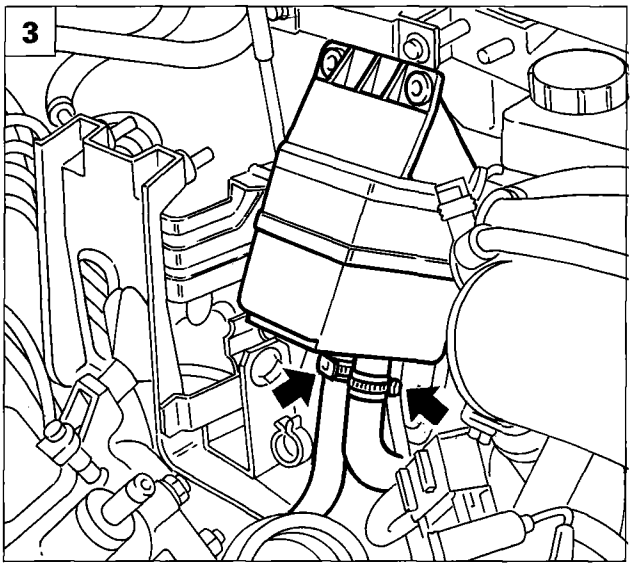

P4F19GX02

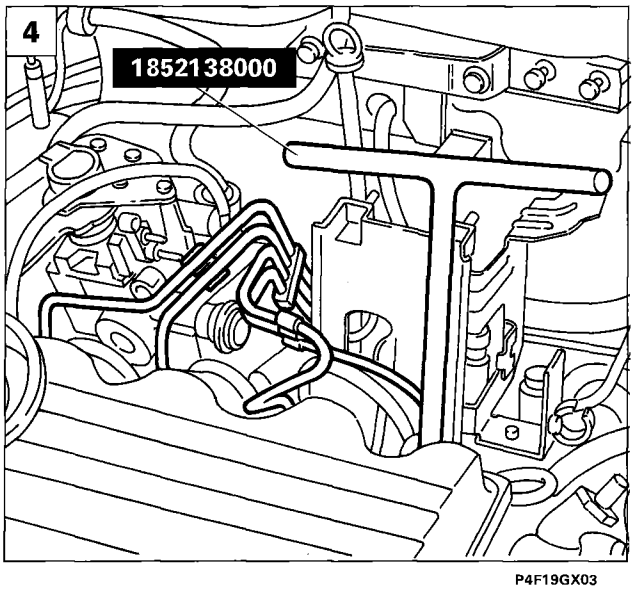

P4F19GX03

1. Unscrew the bolts shown and remove the bulkhead.

2. Disconnect electrical connections arrowed, disconnect fuel inlet and outlet lines (1), unscrew nuts (2) and remove the fuel filter.
   Loosen clip (3) and remove the blow-by pipe, unscrew nuts (4) and move the oil vapour separator to one side.

3. Loosen clips arrowed and remove the oil vapour separator (1).

4. Use wrench 1852138000 to unscrew the diesel supply lines on the injectors and injection pump, then remove the lines.

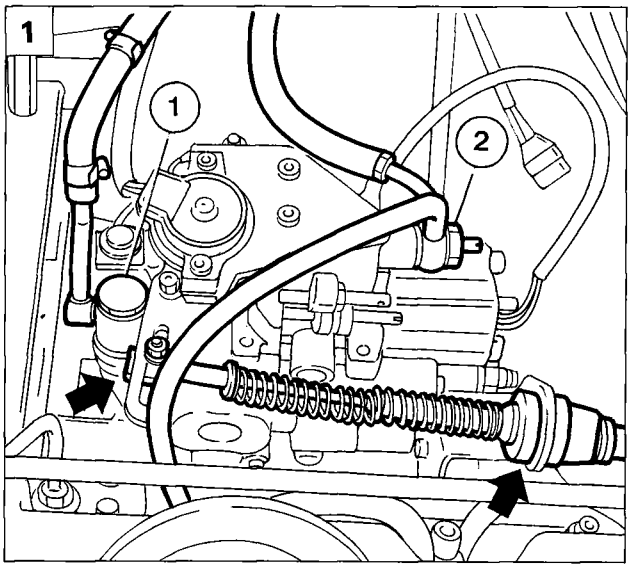

P4F20GJ01

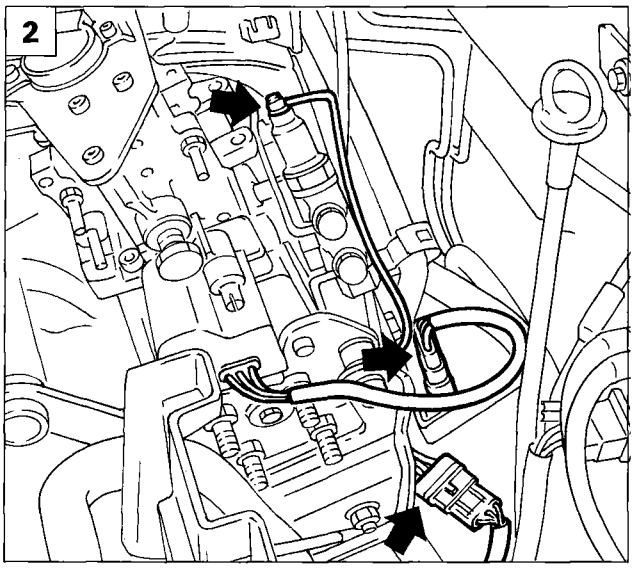

P4F20GJ02

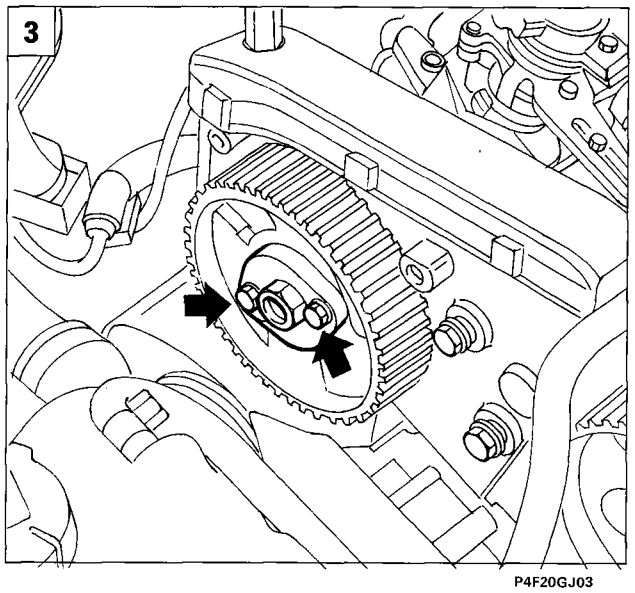

P4F20GJ03

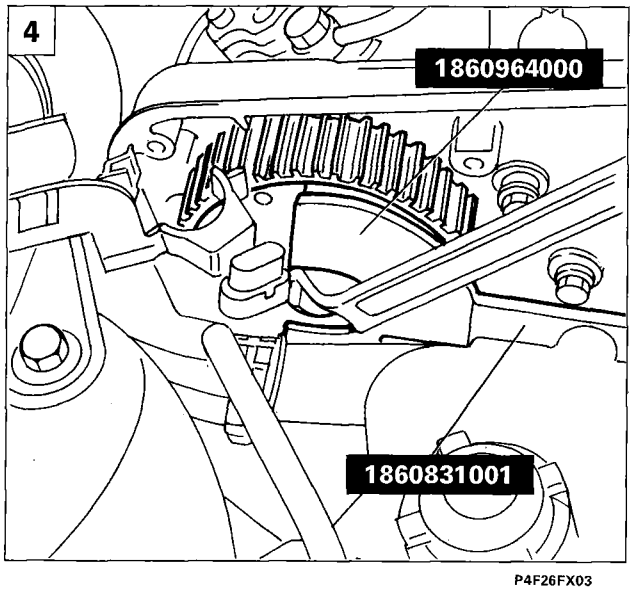

P4F26FX03

1. Disconnect the fuel delivery (1) and return (2) lines from the pump, then disconnect the accelerator cable from the arrowed points and place to one side.
2. Disconnect electrical connections indicated.
3. Loosen bolts securing the retaining plate to the injection pump pulley.
4. Use tools 1860831001 and 1860964000 to release the injection pump pulley retaining nut, then remove the pulley from its seat.

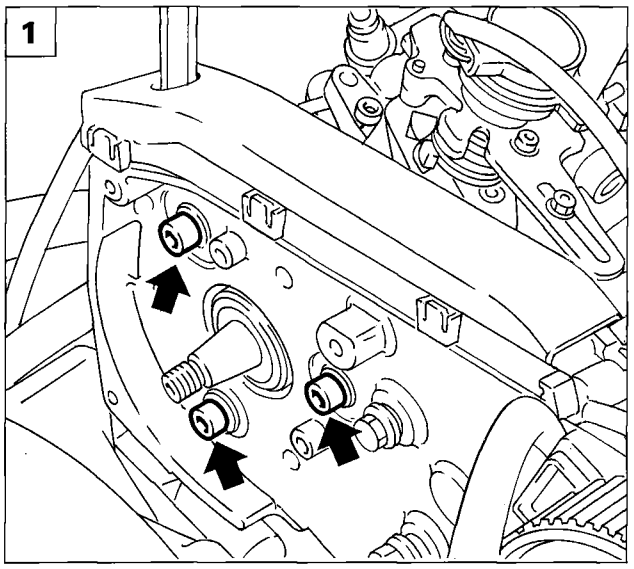

P4F21GJ01

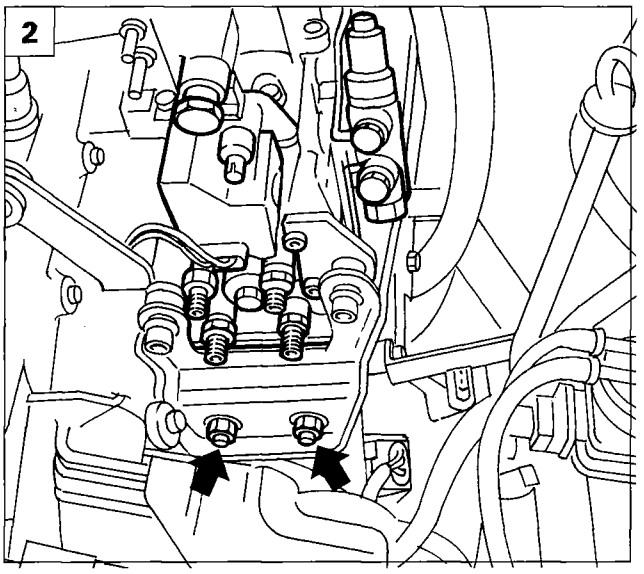

P4F21GJ02

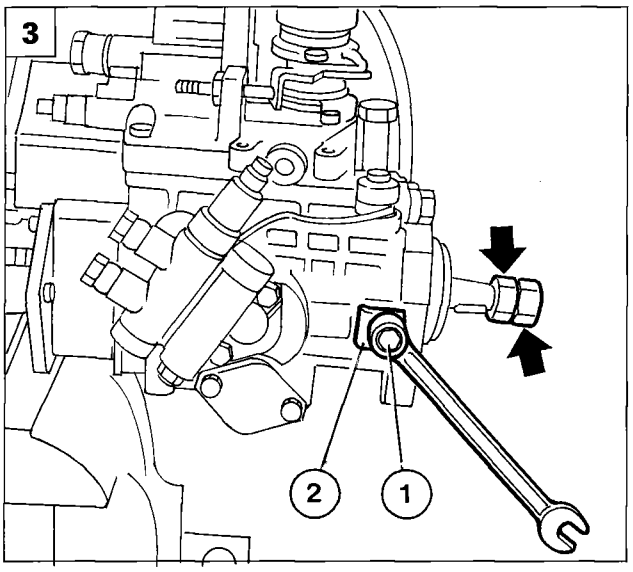

P4F21GJ03

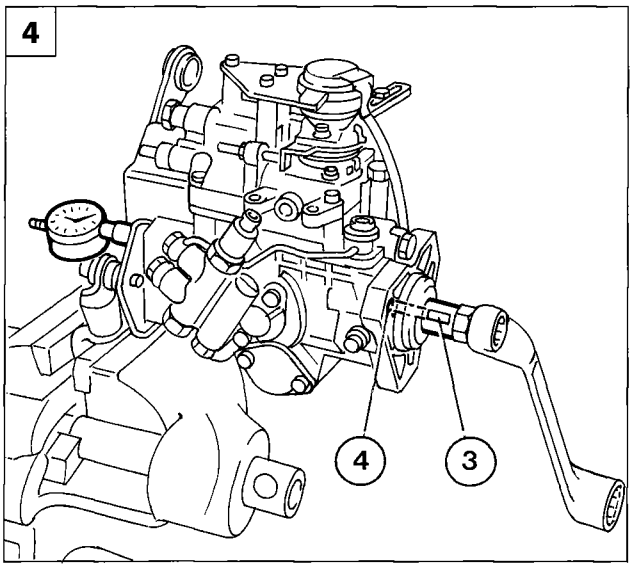

P4F21GJ04

1. Unscrew the bolts retaining the injection pump to the mount.
2. Undo retaining nuts shown and remove the injection pump.

Refitting

NOTE *The injection pump may or may not be fitted with a key for fitting the drive pulley; if a key (part no. 10205820) is available, carry out the procedure described on the following page. If no key is provided, follow the instructions in points 3 and 4 on this page in order to fit the pump out of alignment with the crankshaft, then follow the procedure described on the following page.*

3. Tighten the injection pump in a vice, loosen retaining screw (1), remove spacer (2) and fit a nut and counternut on a threaded end of the pump shaft.
4. Align the key seat on shaft (3) with fastening hole (4).
   Remove the rear cap and tighten tool 1865090000 so that the probe is in contact with the distributor plunger. Turn the shaft anticlockwise until the piston reaches B.D.C. as indicated on the gauge.
   Reset the gauge to zero and turn the shaft clockwise until piston stroke is 0.92 mm, then remove tool 1865090000 and refit the cap.

Copyright Fiat Auto

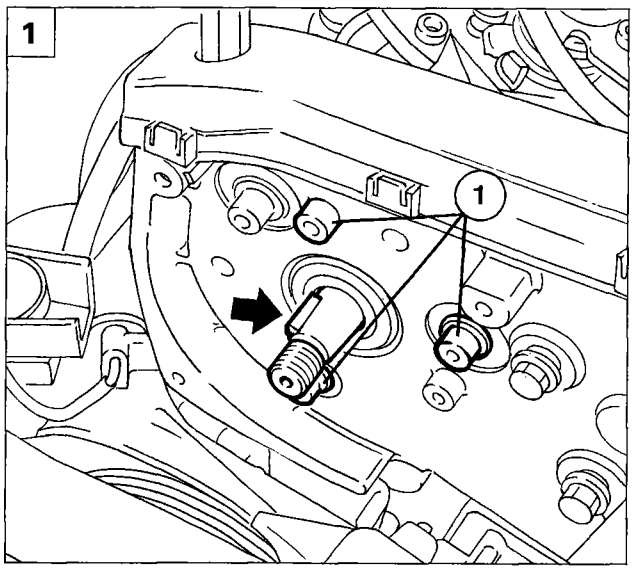

P4F22GJ01

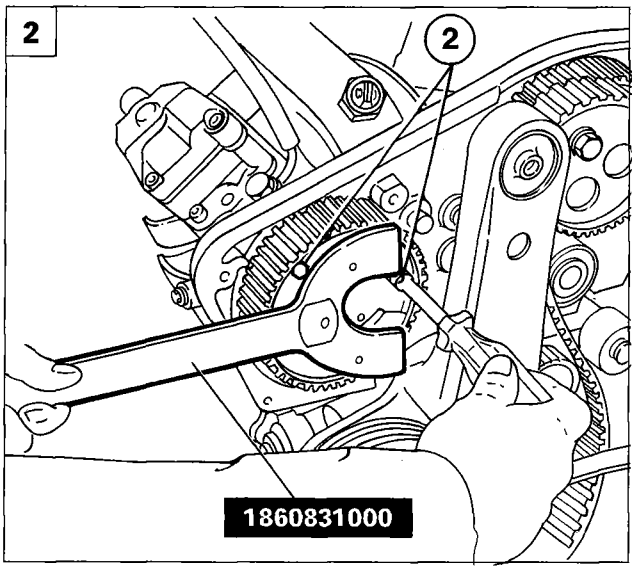

P4F22GJ02

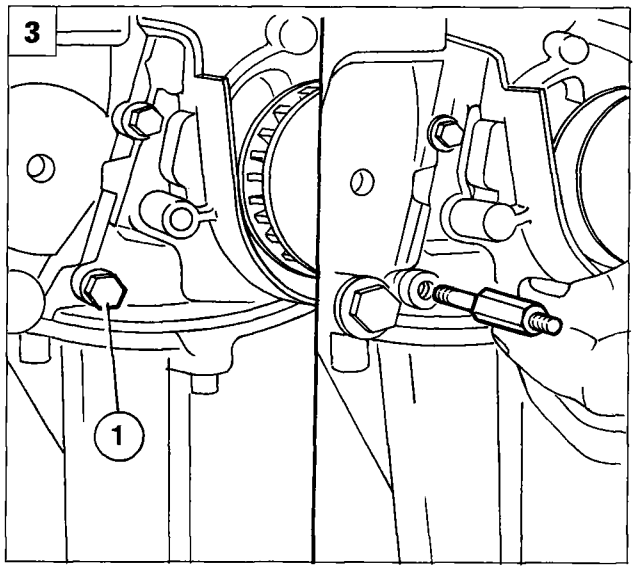

P4F15EX01

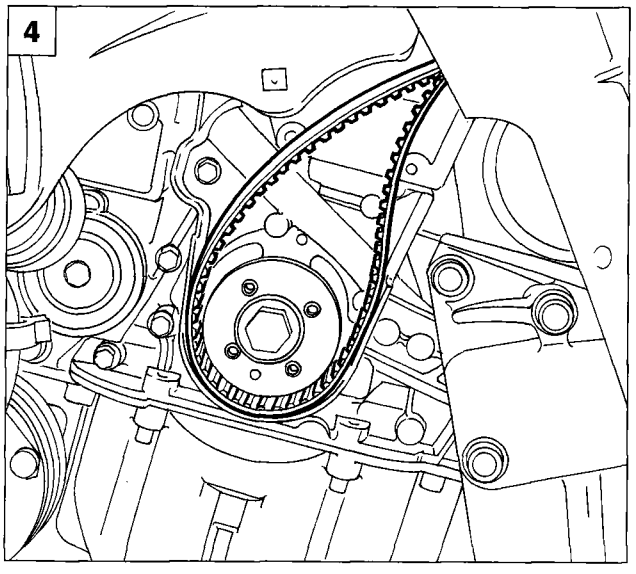

P4F15EX02

1. Fit the injection pump and leave screws (1) and rear retaining nuts loose so that the pump can be turned in its slot while ignition advance is checked.
   If a key is provided (part no. 10205820), fit into groove on pump shaft.
2. Fit the injection pump drive pulley onto the shaft so that rotation may be prevented by fitting service screws (2, purchased locally) into the holes provided on the pulley, which correspond to the threaded holes present on the pump mount. If a key is fitted, use tool 1860831000 to turn the pump-pulley assembly.
3. Remove oil pump retaining bolt (1) and replace the bolt with the pin of tool 1860905000.
4. Fit the timing belt to the crankshaft gear.

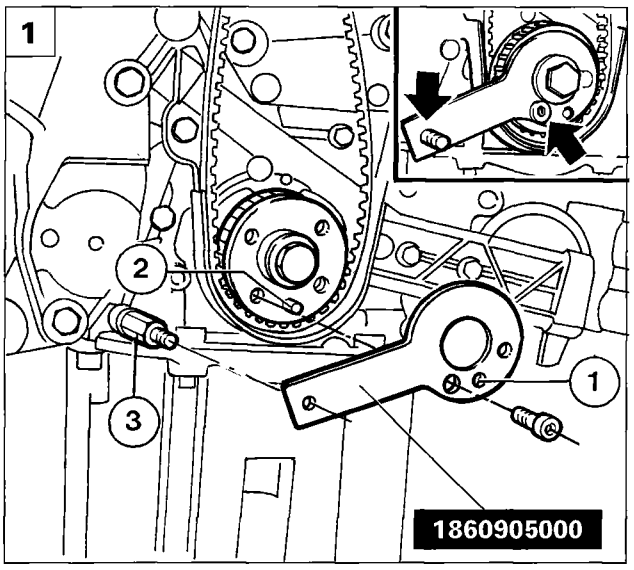

P4F15EX03

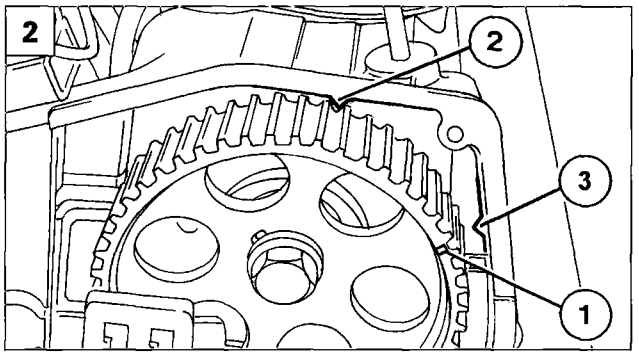

P4F23GJ01

1. Position tool 1860905000 on the crankshaft gear and pin (3); turn the crankshaft through small turns until dowel (2) fits into hole (1). The first cylinder is set to T.D.C. in this position.

2. Use tool 1860831000 to turn the camshaft pulley to achieve the following alignments:

   - up to engine no. 416499
     notch (1) on the pulley should be shifted by 7 teeth (counting clockwise) from notch (2) on the cam cover.
   - from engine no. 416450
     notch (1) on the pulley should be alignmed with notch (3) on the cam cover.

NOTE *Timing is correctly adjusted when, with piston no. 1 at TDC, notch (1) is in the position shown in the figure (for engines up to no. 416449, exact notch position may differ by ± 3° (engine) or ½ tooth).*

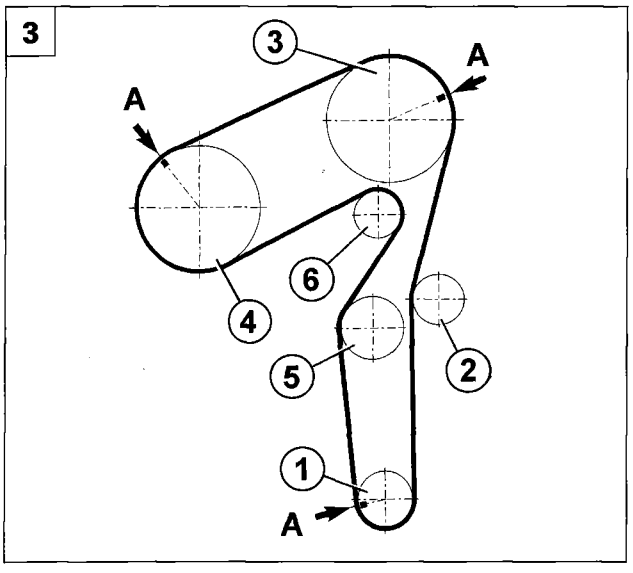

P4F14GX01

3. Finish fitting the timing belt by installing parts in the following order:

1. Crankshaft gear
2. Fixed guide pulley
3. Timing pulley
4. Injection pump pulley
5. Automatic tensioner
6. Coolant pump

For all pre- and post-modification engines, the new belt may be fitted and timing adjusted by aligning the transverse notches (A) on the back of the timing belt with the reference marks on the pulleys.

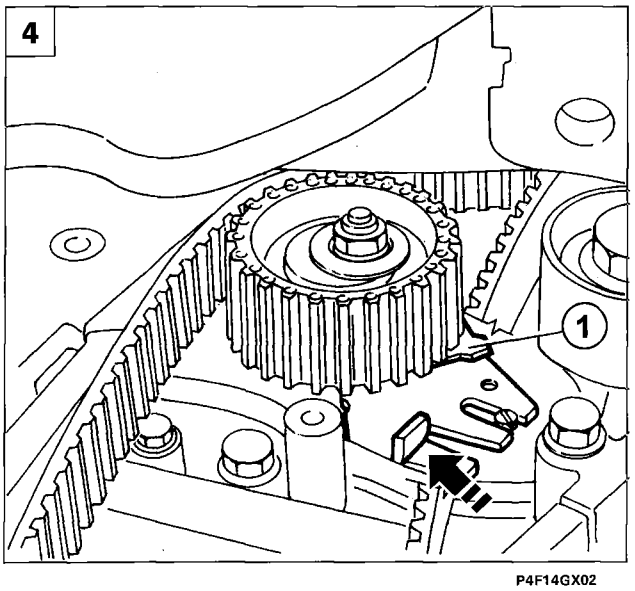

P4F14GX02

NOTE *Fit the belt so that the arrow faces in the direction of engine rotation.*

4. Apply a force at the arrowed point on the automatic tensioner. Move the mobile tensioner indicator (1) to position of maximum tension (facing up), then tighten the belt tensioner retaining nut.

Copyright Fiat Auto

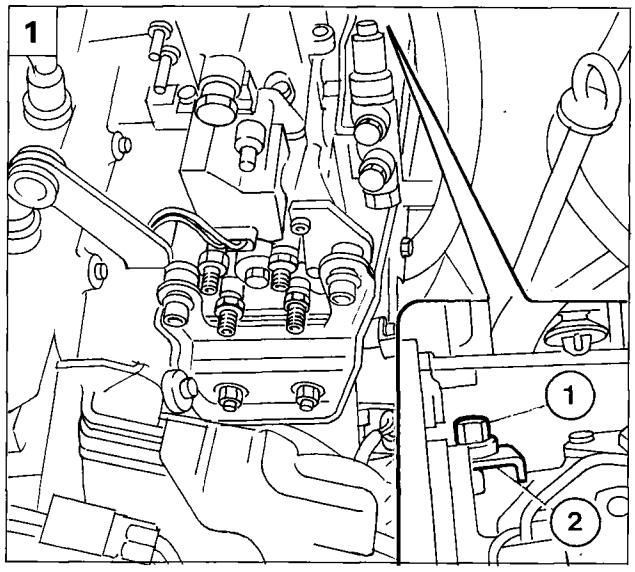

P4F24GJ01

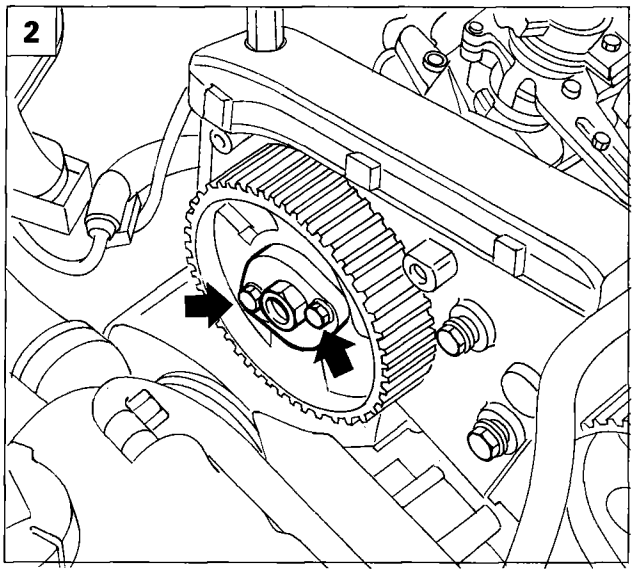

P4F20GJ03

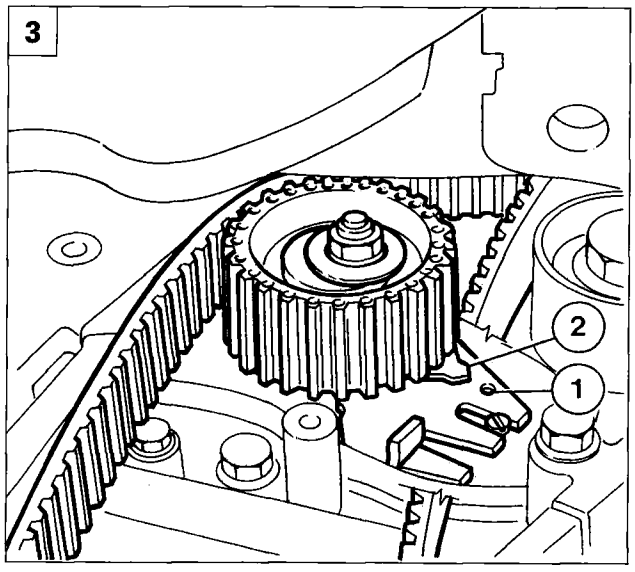

P4F18FX03

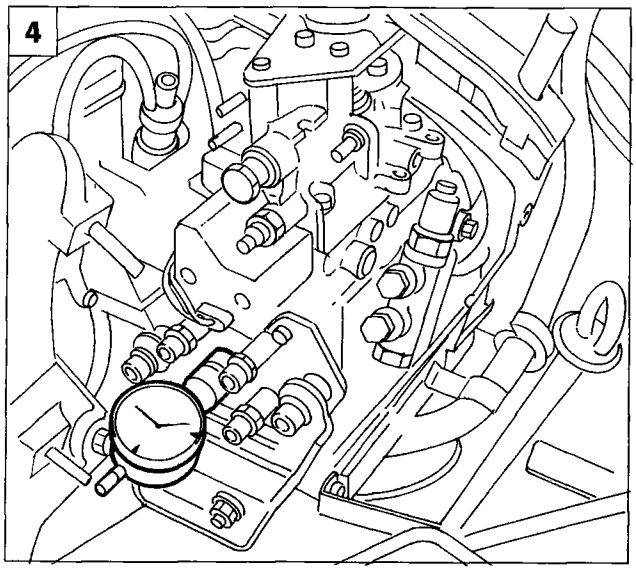

P4F24GJ02

1. Loosen the retaining screw (1) (only if pump and pulley are fitted without a key), fit spacer (2) and tighten bolt (1).
2. Fit retaining plate using the two retaining bolts.
3. Release the injection pump drive pulley by unscrewing the bolts positioned previously and remove tool 1860905000.
   Turn the crankshaft through two turns in its normal direction of rotation, release the tensioner retaining bolt and align the fixed indicator (1) on the tensioner mount with the mobile tensioner indicator (2). Screw in the tensioner nut and tighten to the specified torque.
4. Remove the cap on the pump cover and tighten tool 1865090000 with dial gauge and probe in contact with the distributor plunger.
   Turn the engine against its normal direction of rotation until the distributor plunger reaches B.D.C. as shown on the dial gauge. Reset the dial gauge to zero in this position.
   Turn the engine in its direction of operation until engine piston no. 1 is set to T.D.C. (this can be checked using notches on the distributor pulley). In this position, check that distributor stroke is 0.92 mm.
   If stroke is not 0.92 mm, turn the pump case in its slot until the dial gauge shows the correct value. Then tighten the bolts retaining the pump to the mount.

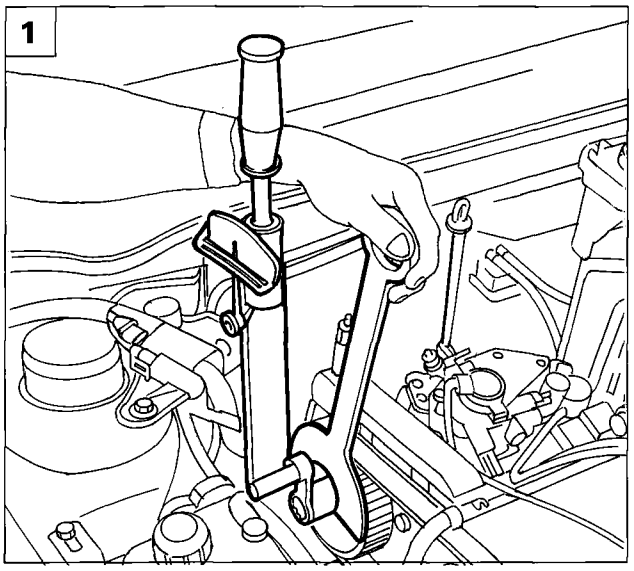

P4F25GJ01

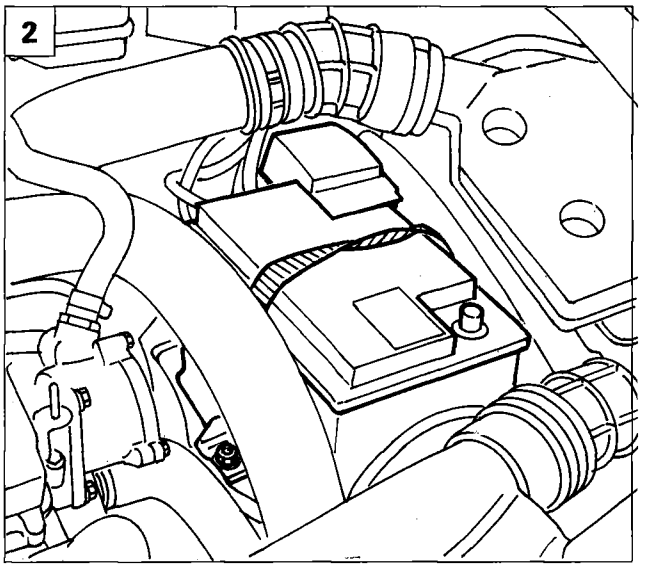

P4F01EX02

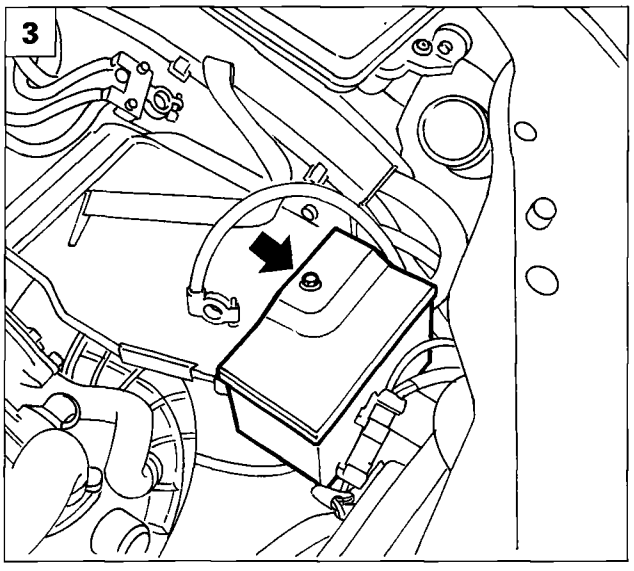

P4F03EX03

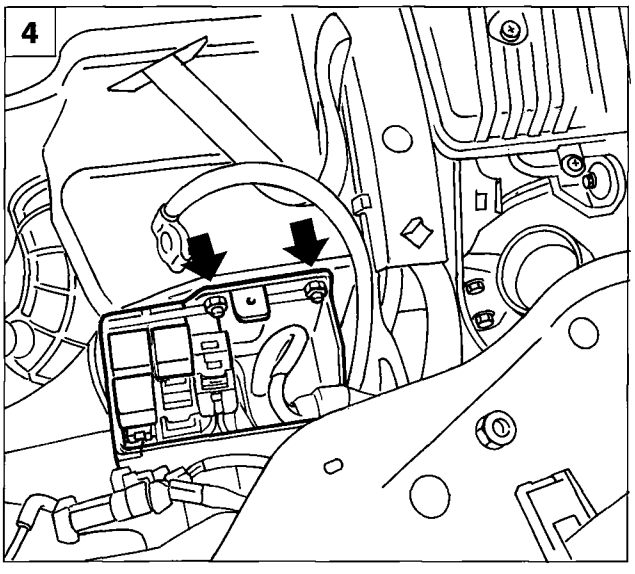

P4F03EX04

1. Tighten the injection pump shaft retaining nut to the specified torque, then refit the parts removed previously by carrying out the removal instructions in reverse order.

REMOVING - REFITTING GLOW PLUG CONTROL UNIT

2. Disconnect the battery terminals, unscrew the bolt retaining the battery to its tray, then remove the battery from the engine bay.
3. Unscrew the bolt shown and remove the relay box cover.
4. Unscrew the nuts shown and move the relay box to one side in the engine bay.

Copyright Fiat Auto

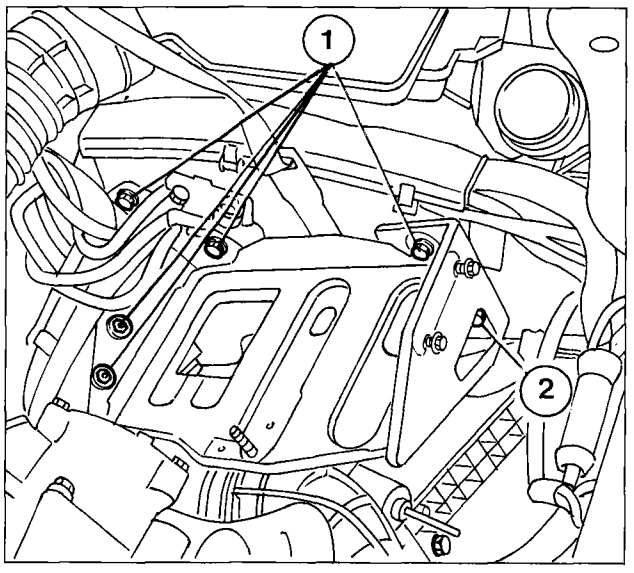

P4F03EX05

Unscrew bolts (1), loosen bolt (2), then remove the battery tray from the engine bay

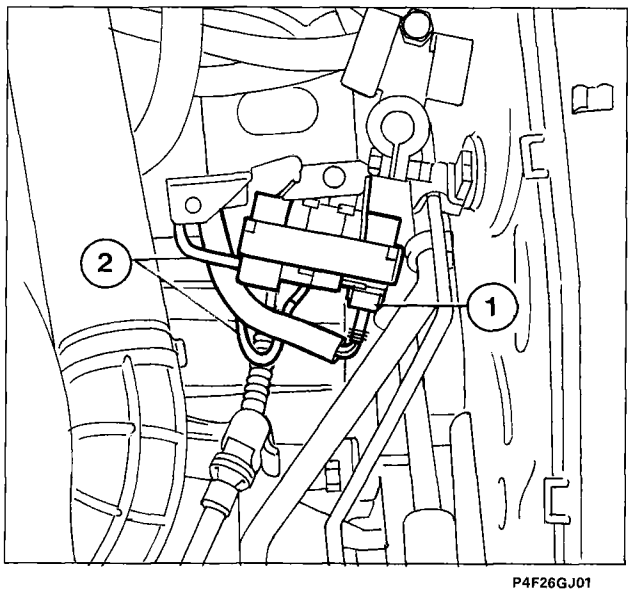

P4F26GJ01

Disconnect electrical connection (1) and eye connections (2), then remove the glow plug control unit from the retaining bracket.

NOTE *Reverse removal operation sequence to refit.*

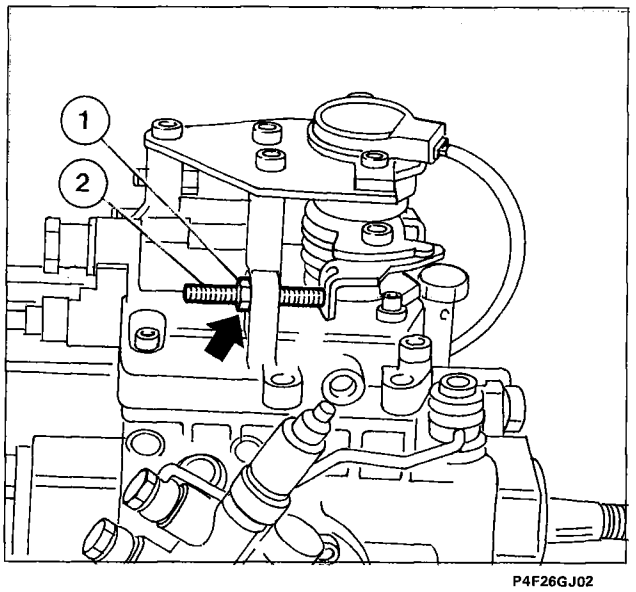

P4F26GJ02

CHECKING AND ADJUSTING ENGINE IDLE SPEED

Check and adjust engine idle speed with the engine warm (i.e. when the radiator fan has come on at least twice) and electrical appliances off (fans, heated rear window, headlamps, air conditioner, etc.).

If the fan comes on during adjustment, stop working until it has come to a standstill.

Check that idle speed is **850±20** rpm. If not, loosen counternut (1) and adjust bolt (2) to obtain the correct speed, then tighten the lock nut.

BLEEDING THE FUEL CIRCUIT

If the engine stalls due to lack of fuel, the low pressure lines are detatched or the fuel filter is replaced, proceed as follows:
- unscrew the delivery lines on the injectors (A) by a few turns;
- run the engine until fuel emerges from the open injector fittings;
- keep the engine running but close the injector fittings.

If the engine does not start, check all fuel line joints (D and fittings (E). Replace seals in order to eliminate air leaks

DRAINING WATER FROM FUEL FILTER

Proceed as follows to drain water from the fuel filter:
- unscrew water drain screw (B) beneath the filter;
- unscrew air bleed screw (C) above the filter;
- allow water and fuel to emerge until the fuel is clear of water, then tighten screws (B) and (C).

REPLACING CARTRIDGE FUEL FILTER

The fuel filter must be replaced at the intervals specified in the programmed maintenance plan. Proceed as follows to replace:
- lubricate the cartridge gasket;
- refill the diesel filter cartridge (self-bleeding time is thus reduced)
- screw the cartridge onto the mount and tighten through 6/8 of a turn (tightening torque 1.3-1.6 daNm).

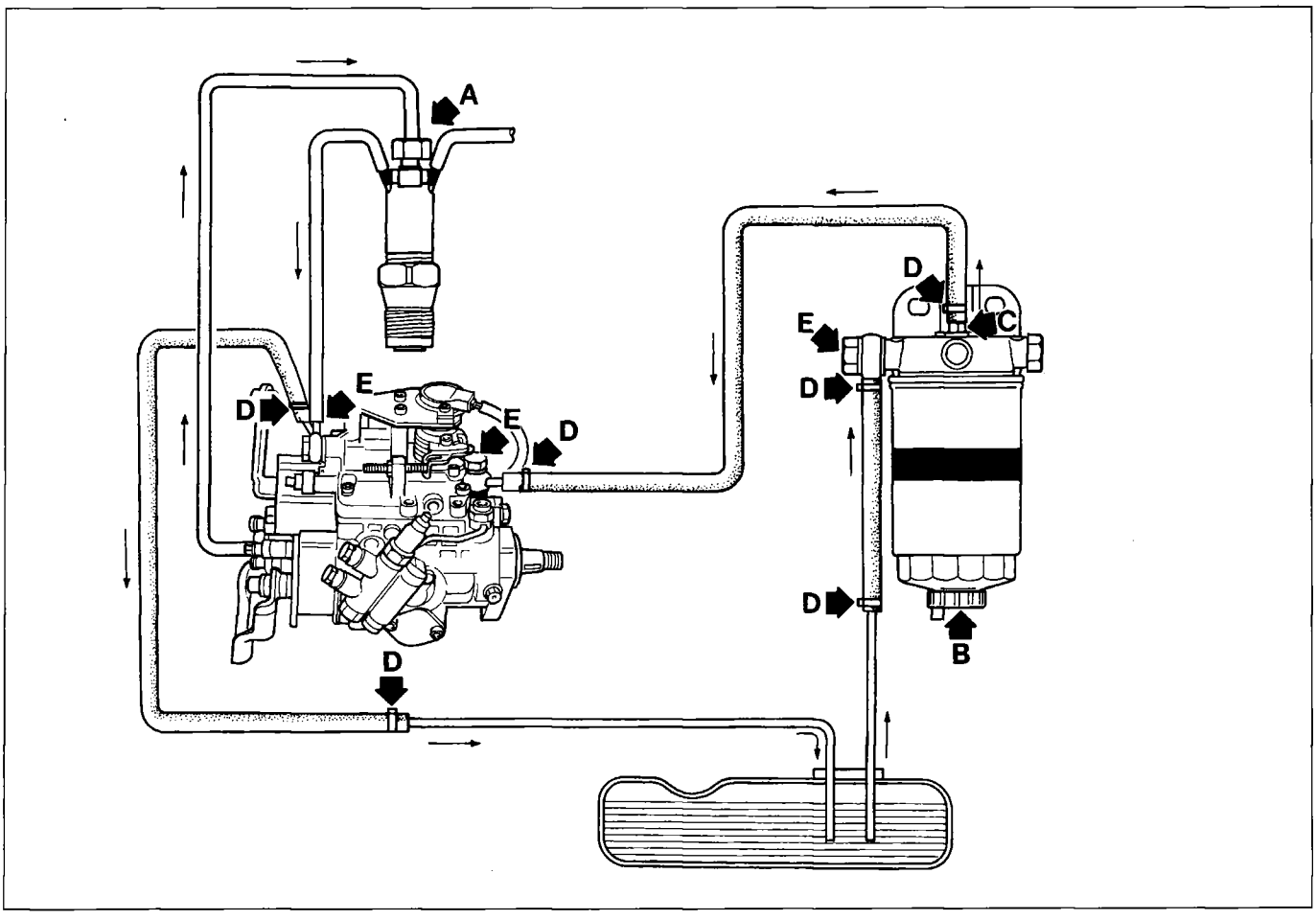

P4F27GJ01

10.

FAULT DIAGNOSIS

Introduction

When working on the engine, the main differences between diesel and petrol units are as follows:

1. on a Diesel engine, fuel is supplied by an injection pump and the system also includes:

   - a tank with fuel inlet and outlet lines;
   - a fuel filter;
   - four injectors with delivery and return lines;
   - a preheating device for cold starts;
   - a device for stopping the engine.

   The injection pump is the most reliable part of the fuel system because its components are subject to very low wear and it cannot easily be incorrectly adjusted.
   Before working on the injection pump, it is therefore advisable to check the operation of the other system components.

2. The Diesel engine combustion process develops very high operating temperatures within the engine. Because the fuel inevitably contains traces of sulphur, this gives rise to:

   - a greater tendency (compared to petrol engines) to produce soot and thus greater wear on mobile parts, particularly those closest to the combustion chamber;
   - a higher tendency for piston rings to become stuck in their seats.

   It is very important to replace the oil filter at intervals. Use only the recommended amount of lubricant oil and ensure the oil is changed at the mileages shown in the programmed maintenance plan. If the vehicle is used under difficult conditions (mainly around town, continual use in hilly areas, towing trailers or caravans, routes in dusty areas) the oil must be changed more often. Ensure that the injectors are always working efficiently to ensure fewer unburnt products are left during engine operation.

3. The Diesel engine combustion process also leads to more engine noise (*) and combustion knock is clearly audible from outside.
   Although this phenomenon has been greatly reduced by present-day prechamber engines, noise is still present at low speeds but tends to disappear at medium-high speeds.

NOTE *The sound of knock increases significantly if the injection pump is set even only a small amount ahead of its correct setting.*

4. An indirect injection Diesel engine needs a prechamber preheating device (fast glow plugs and an electronic control unit) to ensure the fuel ignites more easily when cold and the engine starts more easily.
   A special device is fitted to turn the engine off (achieved by cutting off the fuel flow to the injection pump). This consists of a solenoid which allows fuel to flow through to the injection pump when the ignition switch is turned on and cuts off the fuel flow when the ignition switch is turned to stop.

(*) Engine running noise: this is caused by an excessive fuel pressure gradient, i.e. the ratio between pressures developed by the fuel and corresponding crankshaft angles of rotation.

DIAGNOSING FAULTS IN DIESEL FUEL SYSTEM

This fault diagnosis is applicable only if the engine is serviced and the electrical equipment has been properly checked.

ANOMALY	CAUSE	REMEDY
When warm, the engine does not start or starts with difficulty	Tank empty, tank ventilation blocked	Fill tank, check tank ventilation
	Water in fuel	Drain water from filter, clean the filter and bleed
	Air in fuel system	Bleed and eliminate air leaks into system
	Injection order does not correspond to firing order	Fit pipes from pump to injectors in correct order
	Engine cut-out solenoid short-circuited	Check electrical leads and/or replace solenoid
	Fittings loose, leaks from pipes, pipes broken	Tighten fittings and eliminate leaks and/or replace lines
	Injectors defective or excessively dirty	Clean injectors, check and/or replace
	Incorrect injection pump timing	Restore correct injection pump timing and adjust advance
	Incorrect injection pump setting	Check injection pump timing at bench
When cold, the engine will not start or starts with difficulty	Tank empty, tank ventilation blocked	Fill tank, check tank ventilation
	Water in fuel	Drain water from filter, clean and bleed
	Air in fuel system	Bleed and eliminate air leaks in the system
	Build up of paraffin in the fuel filter	Change the filter and use winter fuel
	Injection order does not correspond to firing order	Fit injection pipes from pump to injector in the correct order
	Engine cut-out solenoid short-circuited	Check electrical leads and/or replace solenoid
	Fittings loose, leaks from pipes, pipes broken	Tighten fittings and eliminate leaks and/or replace lines
	Pre-heating circuit defective	Check glow plugs and ECU
	Injectors defective or excessively dirty	Clean injectors, check and/or replace
	Incorrect injection pump timing	Restore correct injection pump timing and adjust advance
	Incorrect injection pump setting	Check injection pump timing at bench

Copyright Fiat Auto

ANOMALY	CAUSE	REMEDY
Engine misfires when idling	Fuel inlet and outlet lines in the injection pump incorrectly connected	Fit fittings correctly
	Incorrect injection pump setting	Check injection pump setting at test bench
Uneven idling with engine warm	Injection order does not correspond to firing order	Fit pipes from pump to injectors in correct order
	Air in fuel system	Bleed and eliminate air leaks into system
	Fittings loose, leaks from pipes, pipes broken	Tighten fittings and eliminate leaks
	Injectors defective or excessively dirty	Clean injectors, check and/or replace
	Incorrect injection pump setting	Check injection pump setting at test bench
Engine runs unevenly or misfires	Tank ventilation defective	Check tank ventilation
	Fuel delivery and return lines on injection pump changed over	Fit fittings correctly
	Air in fuel system	Bleed and eliminate air leaks into system
	Fuel filter blocked	Replace filter
	Fittings loose, leaks from pipes, pipes broken	Tighten fittings and eliminate leaks and/or replace lines
	Fuel and injection lines blocked or restricted	Check lines: repair or replace
	Water in fuel	Drain water from filter
	Incorrect injection pump timing	Restore correct injection pump timing on test bench
	Injectors defective or excessively dirty	Clean injectors, check and/or replace
	Incorrect injection pump setting	Check injection pump setting at test bench

ANOMALY	CAUSE	REMEDY
Engine inefficient (road performance unsatisfactory)	Tank ventilation defective	Check tank ventilation
	Injection order does not correspond to firing order	Fit pipes from pump to injectors in correct order
	Fuel delivery and return lines on injection pump changed over	Fit fittings correctly
	Air in fuel system	Bleed and eliminate air leaks into system
	Fuel filter blocked	Replace filter
	Fittings loose, leaks from pipes, pipes broken	Tighten fittings and eliminate leaks and/or replace lines
	Fuel and injection lines blocked or restricted	Check lines, repair or replace
	Air cleaner blocked	Replace filter element
	Injectors defective	Check and/or replace injectors
	Incorrect injection pump timing (delayed)	Restore correct injection pump timing and adjust advance
	Incorrect injection pump setting	Check injection pump setting at test bench
Excessive fuel consumption	Injection order does not correspond to firing order	Fit injection pump lines in correct order
	Fittings loose, leaks from pipes, pipes broken	Tighten fittings and eliminate leaks
	Idle speed too high	Adjust idle speed by means of screw on injection pump
	Incorrect injection pump timing	Restore correct injection pump timing and adjust advance
	Incorrect injection pump setting	Check injection pump setting at test bench
Engine will not stop	Engine cut-out solenoid short-circuited	Check electrical leads and/or replace solenoid

Copyright Fiat Auto

ANOMALY	CAUSE	REMEDY
Black smoke at exhaust	Injection order does not correspond to firing order	Fit pipes from pump to injectors in correct order
	Air cleaner blocked	Replace filter element
	Injectors defective	Check and/or replace injectors
	Incorrect injection pump timing	Restore correct injection pump timing and adjust advance
	Incorrect injection pump setting	Check injection pump setting at test bench
White smoke at exhaust	Tank ventilation defective	Check tank ventilation
	Fuel delivery and return lines on injection pump changed over	Fit fittings correctly
	Air in fuel system	Bleed and eliminate air leaks into system
	Fuel filter blocked	Replace filter
	Fuel and injection lines blocked or restricted	Check lines, repair or replace
	Injectors defective	Check and/or replace injectors
	Incorrect injection pump timing (delayed)	Restore correct injection pump timing and adjust advance
	Incorrect injection pump setting	Check injection pump setting at test bench
Engine will not reach maximum rated rpm	Air in fuel system	Bleed and eliminate air leaks into system
	Injectors defective	Check and/or replace injectors
	Incorrect injection pump timing (delayed)	Restore correct injection pump timing and adjust advance
Excessive engine noise	Injectors defective	Check and/or replace injectors
	Incorrect injection pump timing (advance)	Restore correct injection pump timing and adjust advance
	Incorrect injection pump setting	Check injection pump setting at test bench

CHECKING EXHAUST SMOKE USING OPACIMETER

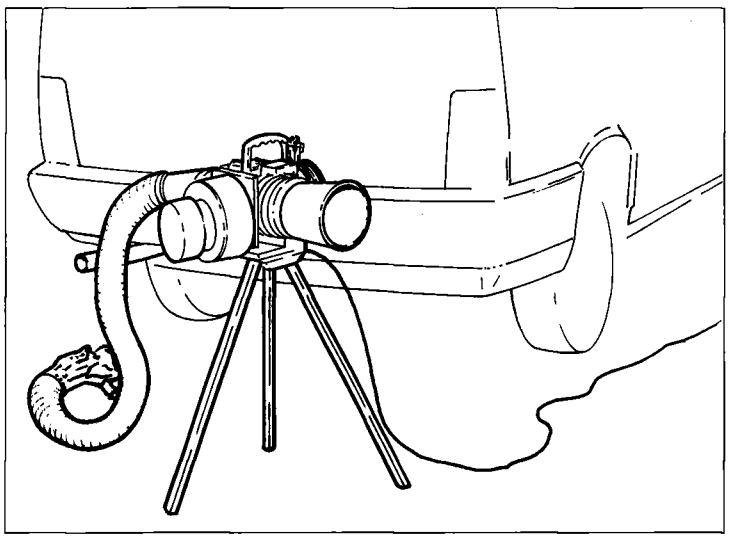

P4F33GJ01

Start up vehicle engine and allow to warm up to service temperature (radiator cooling fan comes on twice).

Position opacimeter measurement unit firmly near the vehicle exhaust pipe (place opacimeter fume exhaust down wind)

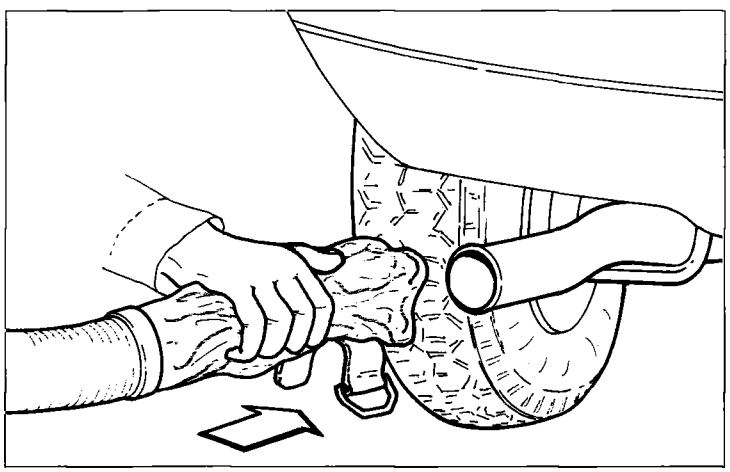

P4F33GJ02

Connect hose of measurement unit to vehicle exhaust pipe.

Connect and adjust equipment as instructed by the Manufacturer.

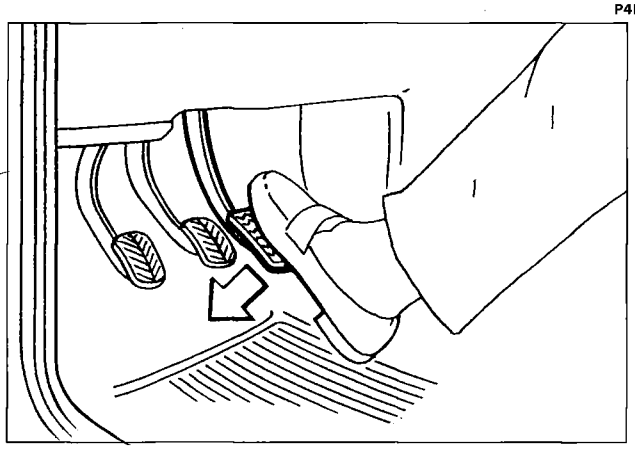

P4F33GJ03

Pump accelerator pedal three times quickly to the floor until rpm limiter threshold speed is reached.
Carry out measurements over five successive full accelerator pedal pumps.
Note maximum values achieved.
Take the average of the three closest readings to obtain the test result.
If more than one set of three readings is suitable, choose the one with the highest average value.

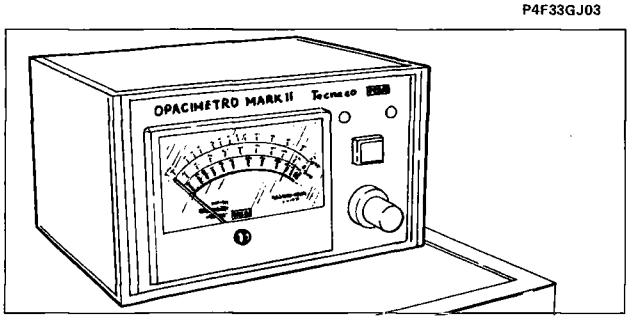

P4F33GJ04

If exhaust smoke level exceeds 70%, carry out the tests described overleaf.

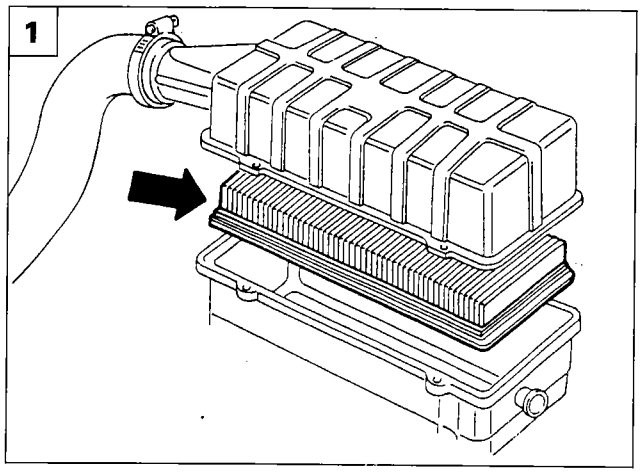

P4F34GJ01

Check air cleaner condition

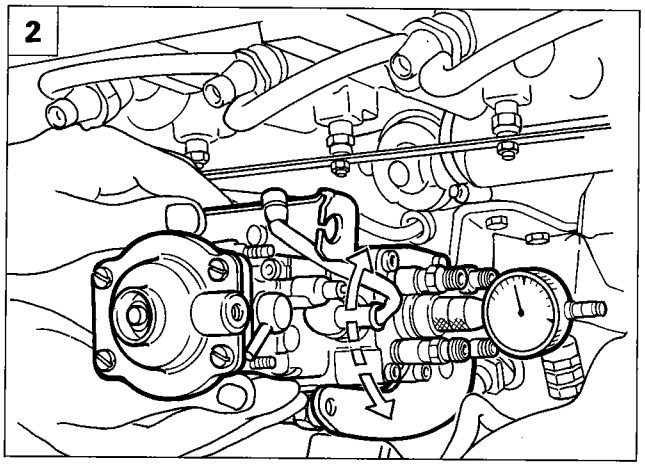

P4F34GJ02

Check injection pump timing and/or output

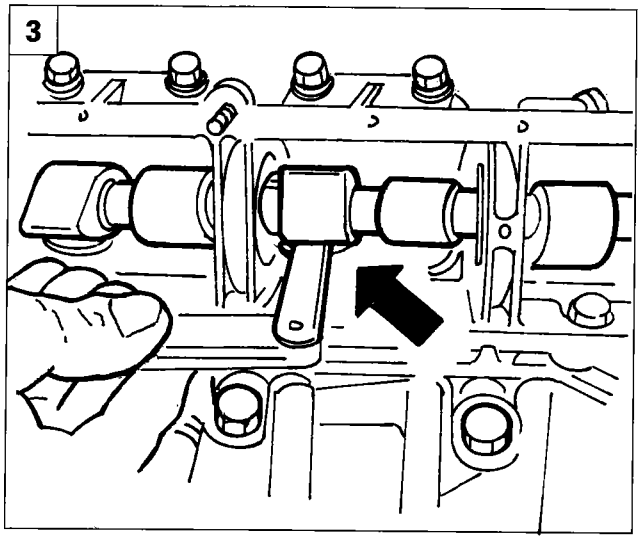

P4F34GJ03

Check valve clearance and/or timing

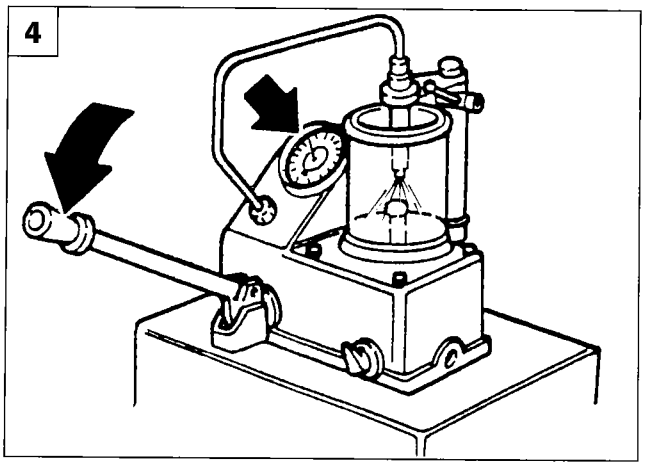

P4F34GJ04

Check injector setting

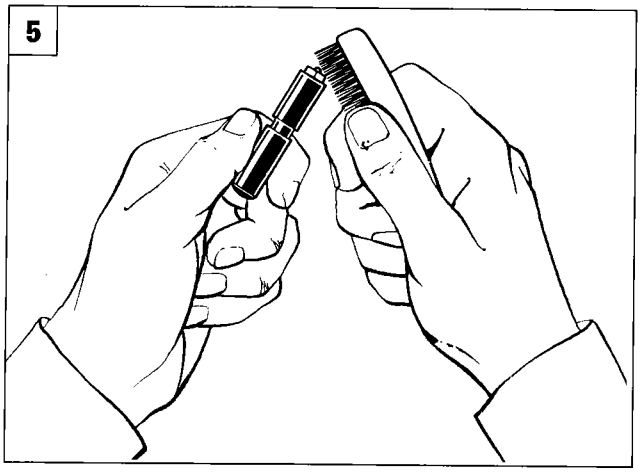

P4F34GJ05

Check injectors are perfectly clean

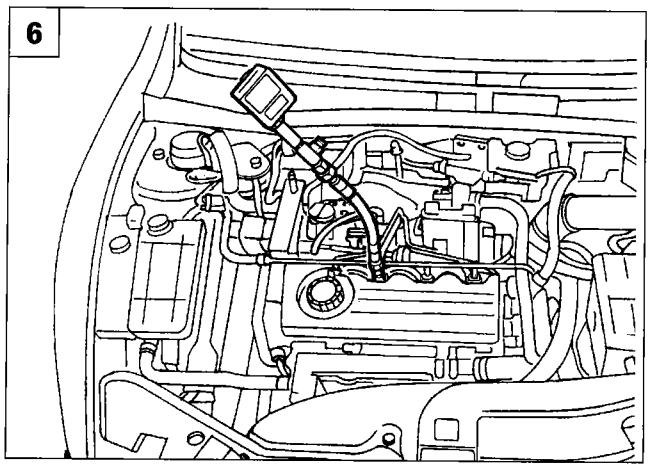

P4F34GJ06

Check compression ratio

Numbers at top of illustrations indicate order of operations.

page

FUEL SYSTEM

- INTRODUCTION 1
- SYSTEM OPERATION 4
  - Preheating 4
  - Starting 5
  - Driving 5
  - Transitory situations 5
  - Adjusting ignition advance 5
  - Exhaust gas recirculation (E.G.R.) 6
  - System faults 6
  - Fault diagnosis 6
- COMPONENT DESCRIPTION 6
  - Injection pump 6
  - Pump actuator position sensor 8
  - Injection advance actuator 9
  - Engine stop solenoid 10
  - Controlled injector 10
  - Preheating control unit 11
  - Accelerator pedal potentiometer 11
  - Air flow meter (debimeter) 12
  - Brake pedal sensor 13
  - Clutch pedal sensor 13
  - Engine and phonic wheel rpm sensor 13
  - Coolant temperature sensor 14
  - Speed sensor 14
  - E.G.R. system. 15
  - BORG WARNER vacuum modulator solenoid 15
  - Oxidising catalytic converter 17
  - CONTROL UNIT PIN-OUT 18
  - Location of fuel system components 19
  - Wiring diagram 20
  - Air conditioner 22
- CHECKING, REPLACING AND ADJUSTING ACCELERATOR PEDAL POTENTIOMETER 23
- INJECTION PUMP OPERATION 24

Copyright Fiat Auto

INTRODUCTION

The most important features of the fuel system on the 2387 TD version with indirect injection are as follows:

- fuel injection managed by electronic control unit (ECU);
- turbocharging via IHI turbocharger and intercooler;
- cross flow inlet/outlet ducts;
- exhaust gas recirculation system (EGR) to eliminate NOx;
- oxidising catalytic converter to eliminate particulate, CO and HC.

These devices ensure the version meets regulations (EC STAGE 2) while also ensuring better running economy, reduced engine noise and better vehicle handling.

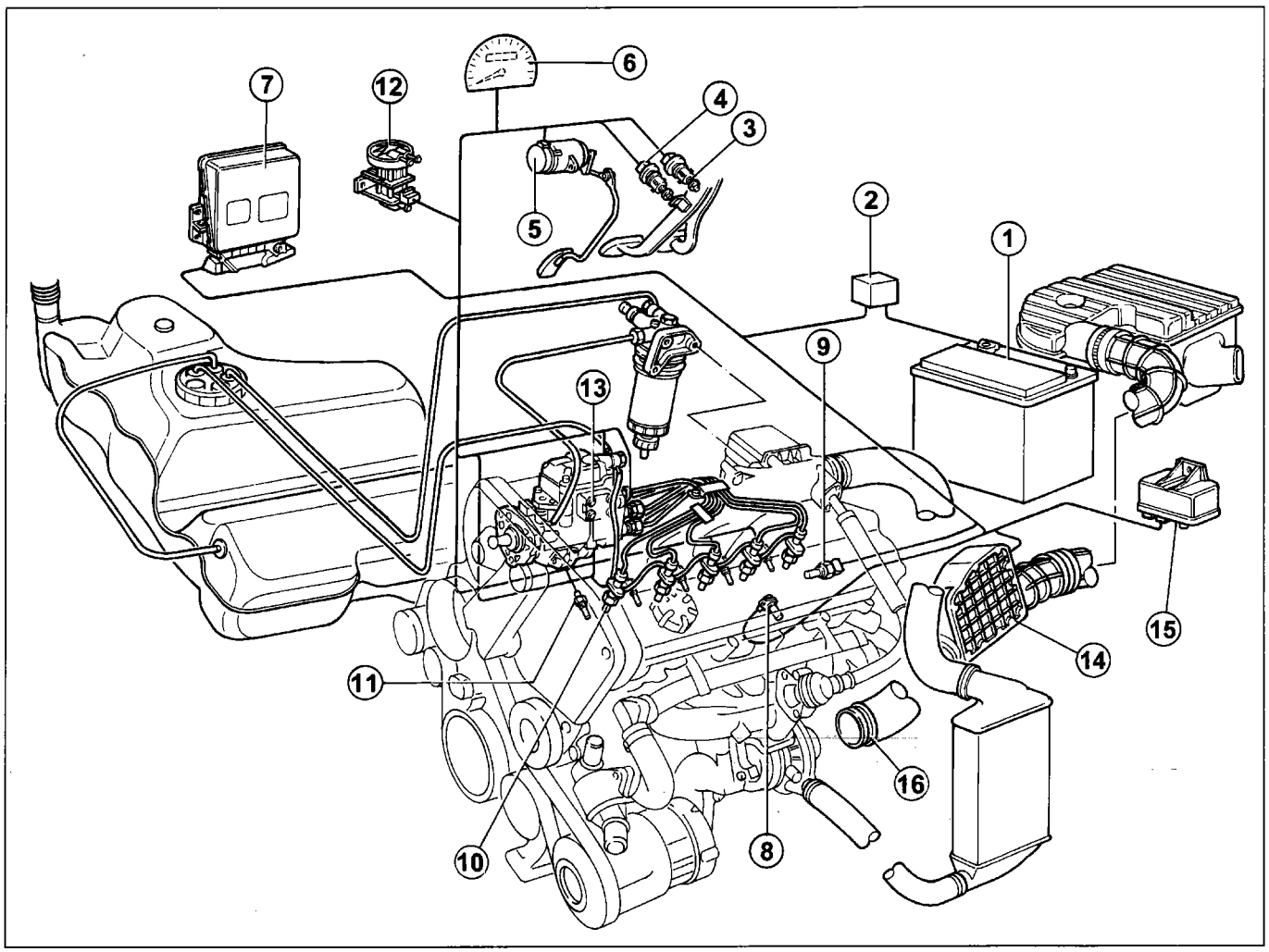

P4F01FJ01

1. Battery
2. Relay
3. Clutch pedal switch
4. Brake pedal switch
5. Accelerator potentiometer
6. Speedometer
7. Electronic control unit
8. Rpm sensor
9. Coolant temperature sensor
10. Controlled injector
11. Heater plugs
12. Borg-Warner modulator valve
13. Bosch injection pump
14. Debimeter
15. Glow plug preheater unit
16. E.G.R. valve.

Copyright Fiat Auto

Electronic management of the injection pump allows moment by moment computing of fuel quantity and injection advance, direct control of driving conditions and real-time response to changes in input parameters.

A BOSCH MSA11 electronic control unit (1) gathers the following information:

- accelerator pedal position through an associated potentiometer (3);
- engine rpm from a sensor fitted to the engine block (10);
- air intake quantity from debimeter (7) and air temperature from a sensor fitted inside;
- diesel temperature from a sensor inside injection pump (2);
- fuel quantity actuator position signal from a sensor fitted to the actuator, contained inside injection pump (2);
- coolant temperature from sensor (4)
- effective injection start point (injector pintle opens) from controlled injector (8), fitted to cylinder 1;
- vehicle speed from speedometer sensor (9) located on gearbox;
- brake operating information from contact (6), located on brake pedal;
- clutch operation from switch (5) located on clutch pedal;
- atmospheric pressure via sensor inside control unit (1);
- air conditioner compressor activation requests;

According to input parameters, control unit (1) consults internal memory maps and corrects output signals accordingly in order to control:

- fuel quantity actuator inside injection pump (2);
- injection advance regulation solenoid inside injection pump (2);
- engine stop solenoid inside injection pump (2);
- glow plug control unit (17);
- Borg Warner vacuum modulator solenoid (14) controlling E.G.R. valve;
- glow plug warning light (16);
- fault information via infocenter (13);
- rev counter (11);
- compressor electromagnetic clutch engagement for air conditioner (15);
- tester point (12).

The control unit is also responsible for the immobilizer function (Fiat CODE). This is performed by a specific control unit (Fiat CODE) (18) able to communicate with electronic control unit (1) and an electronic key with a sender unit which sends out an identification code.

Whenever the key is turned to STOP, the Fiat CODE system de-activates electronic control unit (1) fully.

When the key is turned to MAR, the following operations take place in order:

1 - control unit (1) (whose memory contains a secret code) requests the Fiat CODE to send back the secret code to de-activate the function block;

2 - the FIAT CODE control unit responds by sending out the secret code only after receiving an identification code transmitted by the ignition key;

3 - secret code identification allows de-activation of the lock on the electronic control unit (1) so that normal operation can resume.

NOTE *Due to the presennce of the Fiat CODE* **DO NOT CARRY OUT** *tests using another electronic control unit during fault diagnosis and/or functional checks. In this case, the Fiat CODE would transfer its (secret) identification code to the test control unit, which could not then be used on other vehicles.*

INPUT AND OUTPUT SIGNALS BETWEEN CONTROL UNIT/SENSORS AND ACTUATORS

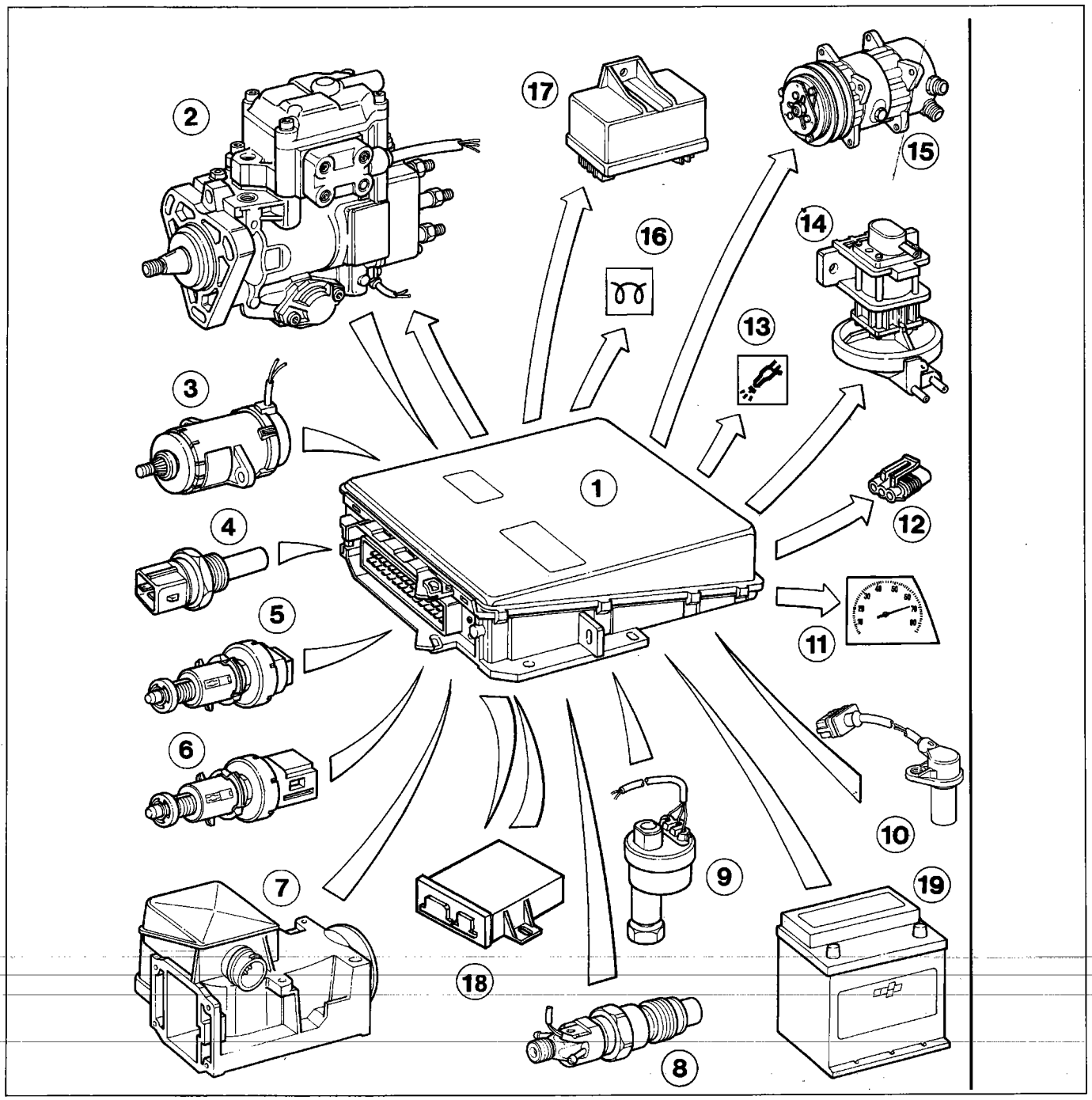

P4F03FJ01

1. Electronic control unit
2. Injection pump
3. Accelerator pedal potentiometer
4. Coolant temperature sensor
5. Clutch pedal switch
6. Brake pedal switch
7. Air flow meter (debimeter)
8. Controlled injector
9. Speedometer sensor
10. Rpm sensor
11. Rev counter
12. Diagnostic socket
13. Injection system warning light bulb
14. Borg Warner solenoid
15. Heating/ventilation system
16. Glow plug warning light
17. Glow plug control unit
18. FIAT CODE control unit
19. Battery

Copyright Fiat Auto

SYSTEM OPERATION

In this section we will discuss the strategies adopted by the electronic control unit under a range of engine service conditions.

Preheating

Glow plugs (4) are controlled and timed by the injection electronic control unit (19) via a glow plug control unit (6).
The time for which the glow plugs are activated (and for which the warning light on the instrument panel is lit) is directly dependent on engine coolant temperature.
The grace period (i.e. period when engine may be started after the warning light has gone out without repeating the preheating cycle) lasts about 15 seconds.
Injection control unit (19) also controls a post-heating stategy whereby the glow plugs are still supplied with power after start-up for a time computed on the basis of engine coolant temperature (up to 60° C) and rpm (up to 1300 rpm).
This specific strategy allows engine heating time and hydrocarbon emissions to be reduced following start-up.

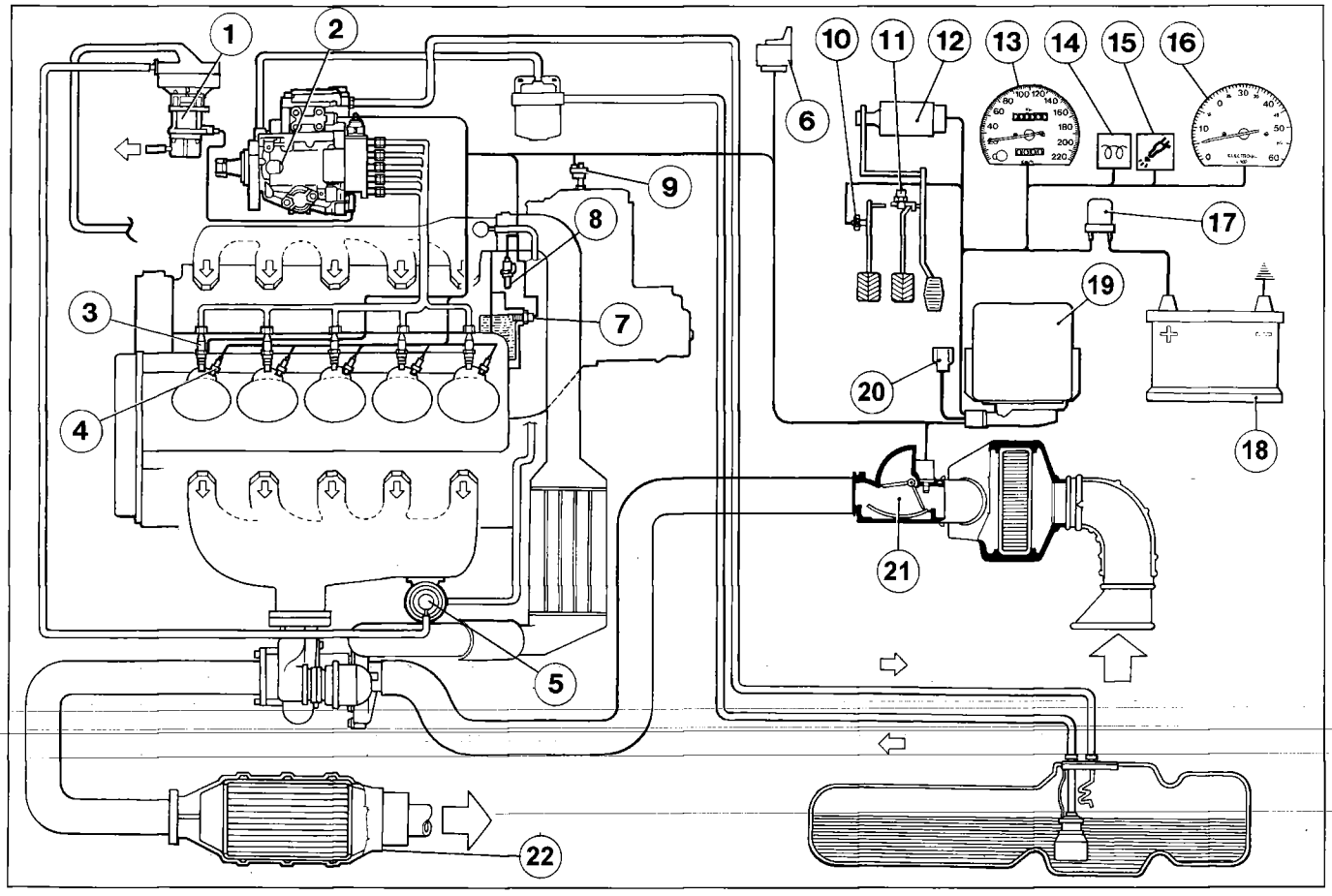

P4F04FJ01

1. Borg Warner modulator valve
2. Bosch injection pump
3. Controlled injector
4. Glow plugs
5. EGR valve
6. EGR valve
7. Coolant temperature sensor
8. Rpm sensor
9. Speed sensor
10. Clutch pedal sensor
11. Brake pedal sensor
12. Accelerator potentiometer
13. Speedometer
14. Glow plug warning light bulb
15. Injection system warning light
16. Rev counter
17. Relay
18. Battery
19. Injection control unit
20. Diagnostic socket
21. Air flow meter (debimeter)
22. Catalytic converter

Starting

During engine start-up, control unit (19) does not recognise the signal from accelerator pedal potentiometer (12); acceleration does not therefore influence the start-up procedure.

Fuel flow is determined solely by rpm and coolant temperature.

During start-up, the control unit determines injection advance time on the basis of a signal from coolant temperature sensor (7), ignoring the signal from controlled injector (3).

Driving

When the vehicle is being driven, ECU (19) computes fuel flow on the basis of signals from accelerator pedal potentiometer (12) and rpm sensor (8). By means of a rotary electromagnetic actuator, the ECU moves the regulation cursor, which in turns controls effective pump stroke and thus fuel quantity.

The quantity of fuel to be injected is corrected on the basis of:
- signal from debimeter (21) (intake air quantity) in order to obtain maximum possible fuel flow without exhaust smokiness
- diesel temperature, in order to compute the exact weight of fuel injected. Although the pump controls the volume of fuel, it is still necessary to compute the weight of fuel injected, which depends on density (and thus temperature) in order to caculate the air/fuel ratio. As an example, 1 cc. of diesel has a different weight at 0 °C compared to the same volume at 50 °C.
- intake air temperature and atmospheric pressure, in order to optimise the air/fuel ratio to engine service conditions.

Maximum output is limited by following a maximum torque curve, in turn dependent upon engine rpm.

The actual position of the fuel quantity actuator, required for sending the exact amount of fuel to injectors, is recorded by an inductive sensor fitted to the actuator. The ECU compares actual data with theoretical data to correct actuator position until the actual position coincides with the theoretical position.

Transitory situations

Control unit (19) implements a strategy designed to modulate engine operation during transitory situations of acceleration and or deceleration, avoid unstable operating conditions (jerks and juddering) and improve handling.
The ECU gathers information on gear currently engaged from the engine rpm and vehicle speed sensor, while a switch on the clutch pedal provides it with data on gear changes. Whereas sudden changes in input parameters (accelerator pedal and engine rpm) bring about abrupt changes in fuel flow with conventional systems, with this system the ECU controls fuel delivery gradually to alter the output curve in favour of improved handling.
A signal from the brake switch is compared with a signal from the accelerator pedal. When both signals are present at the same time for longer than 0.6 seconds below a speed of 1400 rpm, the control unit considers this a fault situation and cuts in to reduce speed to idle level.

When this fault occurs, a quick press of the accelerator pedal restores the ECU to normal management status.

Adjusting injection advance

Advance (injection point) is defined by the quantity of fuel injected, engine rpm, coolant temperature (up to 60 °C) and atmospheric pressure sensor signal.
Injection control unit (19) compares injection start point, a signal from controlled injector (3), with the theoretical instant of injection in order to govern a solenoid. This in turn modulates pressure acting on advance variator piston in order to adjust actual advance until it coincides with the theoretical value.

Copyright Fiat Auto

Exhaust gas recirculation (E.G.R.)

An exhaust gas recirculation system (E.G.R.) has been fitted to reduce NOx (nitrogen oxide) emissions further.
On the basis of fuel flow, rpm, intake air temperature and coolant temperature (from 60° C), injection control unit (19) governs a BORG WARNER vacuum modulator valve (1), which in turn controls the E.G.R. valve (5).
E.G.R. valve (5) moves a plunger to regulate the flow of burnt gases from the exhaust manifold to the intake manifold.
These gases are mixed with the intake air and then introduced into the cylinders. This achieves two results:

- less air is introduced;
- combustion temperature is reduced (due to the presence of inert gases) to reduce the formation of NOx (nitrogen oxides).

Injection control unit (19) is provided with constant information on recirculated gas quantity by debimeter (21): if intake of a given quantity of air (Qam) is required for a given rpm and the value relayed by the debimeter (Qar) is lower, the difference (Qgr) provides recirculated gas quantity.

Qam - Qar = Qgr

Qam = Theoretical air quantity in memory
Qar = Actual air quantity
Qgr = Recirculated gas quantity

The absolute atmospheric pressure signal is used to govern the modulator solenoid. It tells the control unit when the vehicle is being driven at altitude so that the recirculated gas quantity can be reduced to prevent engine smokiness.

System faults

When part of the system stops working (signal not produced or signal not properly recognised), the driver is informed of the fault by means of a message displayed on the infocenter screen.
In the case of signals crucial to implementation of the in jection strategy, the injection control unit is able to replace the parameter with an average value saved in the unit memory (recovery value). Performance is reduced but operation is nevertheless safe for the engine.

Fault diagnosis

For system testing, serial line (20) is used for connection to a Fiat/Lancia Tester and a Computerised Test Station. The module required for the injection system is coded M34A

COMPONENT DESCRIPTION

Injection pump

In an electronic injection pump, the hydraulic head with high pressure pump and operating parts are the same as used on a mechanical injection pump.
On this electronically controlled pump, flow is governed by an electromagnetic actuator (2) (see drawing on page 7). Actuator rotation is converted into linear movement of regulation cursor (6) by means of a cam coupling.
The flow to be sent to the injectors is computed according to accelerator pedal position (i.e. signal transmitted by potentiometer connected to the pedal) and the number of revs recorded by the sensor.
Inductive sensor (8) fitted to the regulation cursor control shaft informs the control unit of the rotation angle set by the electromagnetic actuator (2) and consequently the position of regulation cursor (6).

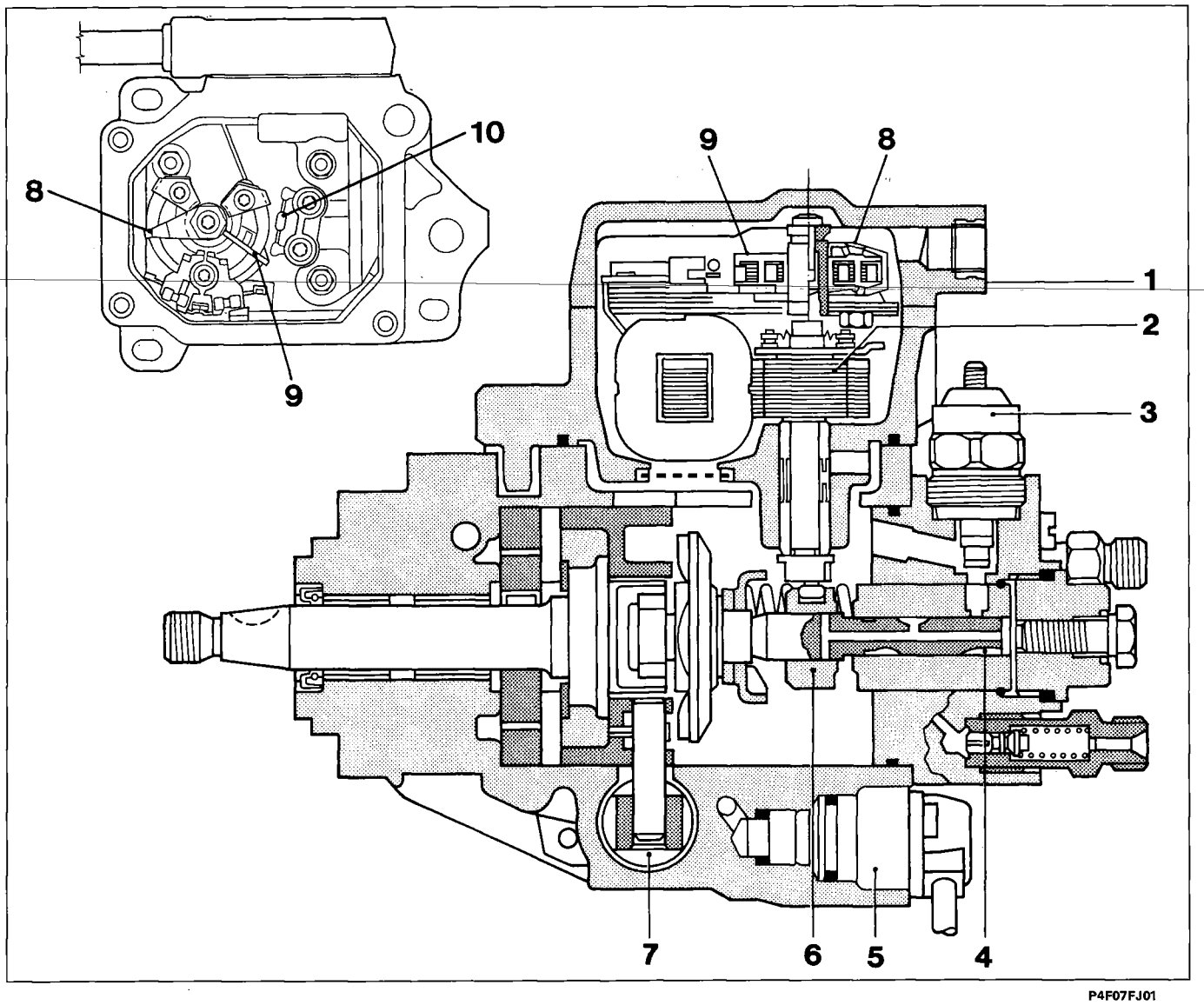

P4F07FJ01

1. Pump cover
2. Electromagnetic actuator
3. STOP solenoid
4. Distributor piston
5. Injection advance actuator
6. Adjustment cursor
7. Injection advance adjustment piston
8. Mobile ring
9. Reference ring
10. Diesel temperature sensor

After comparing the position of regulation cursor (6) transmitted by sensor (8) with the position saved in its memory, the ECU performs a correction, taking into account fuel temperature recorded by sensor (10) and thus fuel density, until actual position of regulation cursor (6) coincides with theoretical value.

The exact amount of fuel required for the specific driving conditions is thus obtained to achieve: peak performance with good fuel economy and minimum levels of smokiness.

Regulation of injection point (advance) depends on the quantity of fuel to be injected, engine rpm and engine coolant temperature.

The controlled injector informs the control unit on actual injection advance, i.e. point at which needle valve begins to move. On the basis of these signals, the ECU corrects the advance set by the injection advance actuator until the theoretical level is achieved.

Copyright Fiat Auto

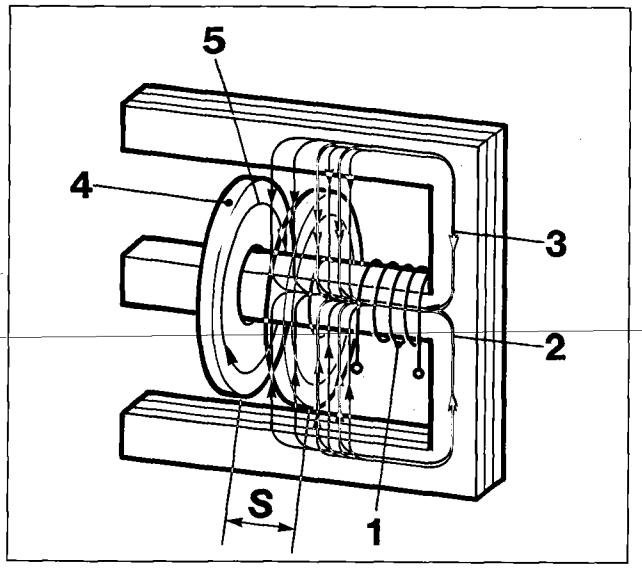

P4F08FJ02 P4F08FJ01

Pump actuator position sensor

Principle of operation

The sensor used in the Bosch electronic pump to identify actuator position exploits the following principle:
Magnetic field (3) is set up around shaped magnetic core (2) by means of coil (1) wound around one branch of the core, which receives an alternating current.
When disc (4) in conductive material is fitted on the central branch of the core, disc position defines the limit of magnetic field (3).
Flow changes inside the disc set up an electrical field, which creates currents (5) known as "Foucault currents".

If disc (4) is moved, the intensity of magnetic field (3) changes; if magnetic field (3) is to be maintained constant, the intensity of current sent to coil (1) must be changed. This current change is proportional to movement S of disc (4).

Description of operation

The core is specially shaped in this particular case (see figure below).
Two coils L1 and L2 are wound onto the core. Coil L2 with fixed ring (2) forms the reference system. Coil L1 with mobile ring (1), integral with pump actuator shaft, constitutes the measurement system. The control unit sends an alternating current of fixed amplitude and frequency to coil L2. Coil L1 receives the same current offset by 180° so that the sum of the two currents is zero.
When ring (1) shifts, magnetic field intensity alters. This brings about a change in the amplitude of current in coil L1 and the sum of currents becomes other than zero.
At this point, the ECU alters the current sent to coil L1 in order to restore the sum of the two currents to zero. The size of the change in current to coil L1 is proprtional to the movement of mobile ringhecontrolunitthusobtains information on pump actuator position.

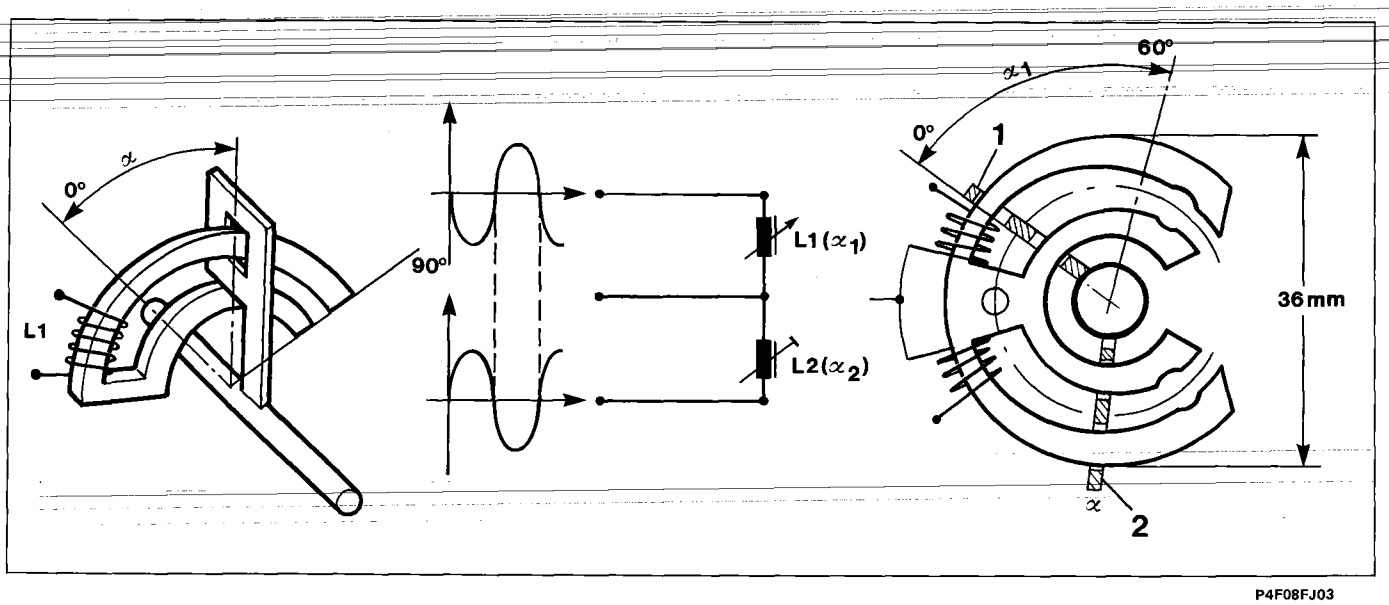

P4F08FJ03

Injection advance actuator

The advance is altered by modulating pressure in chamber (1) communicating with pump case via pulse solenoid (3).
During operation, fuel pressure inside the pump reaches chamber (1) and exercises a thrust on piston (2) that is countered by spring (4) and pressure in chamber (5).
Solenoid (3) is controlled by the ECU in order to restore pressure in chamber (1) to a value corresponding to the required injection advance. Excess pressure is discharged into chamber (5), which carries fuel back to the tank.
The position of piston (2) is determined by the difference between pressures acting on the two faces.
The position assumed by piston (2) also determines the position of pin (7), which is fitted in piston seat (6): when roller carrier race (8) is turned, the cam disc phase is also altered. As a result, the rollers lift the rotary cam disc earlier in order to advance the delivery phase by a very specific angle.
With the solenoid open, the pressure drop is maximal and injection delay is maximal. When the valve is operated, injection start point is gradually advanced according to the pressure drop.
Solenoid (3) remains open if not electrically activated.

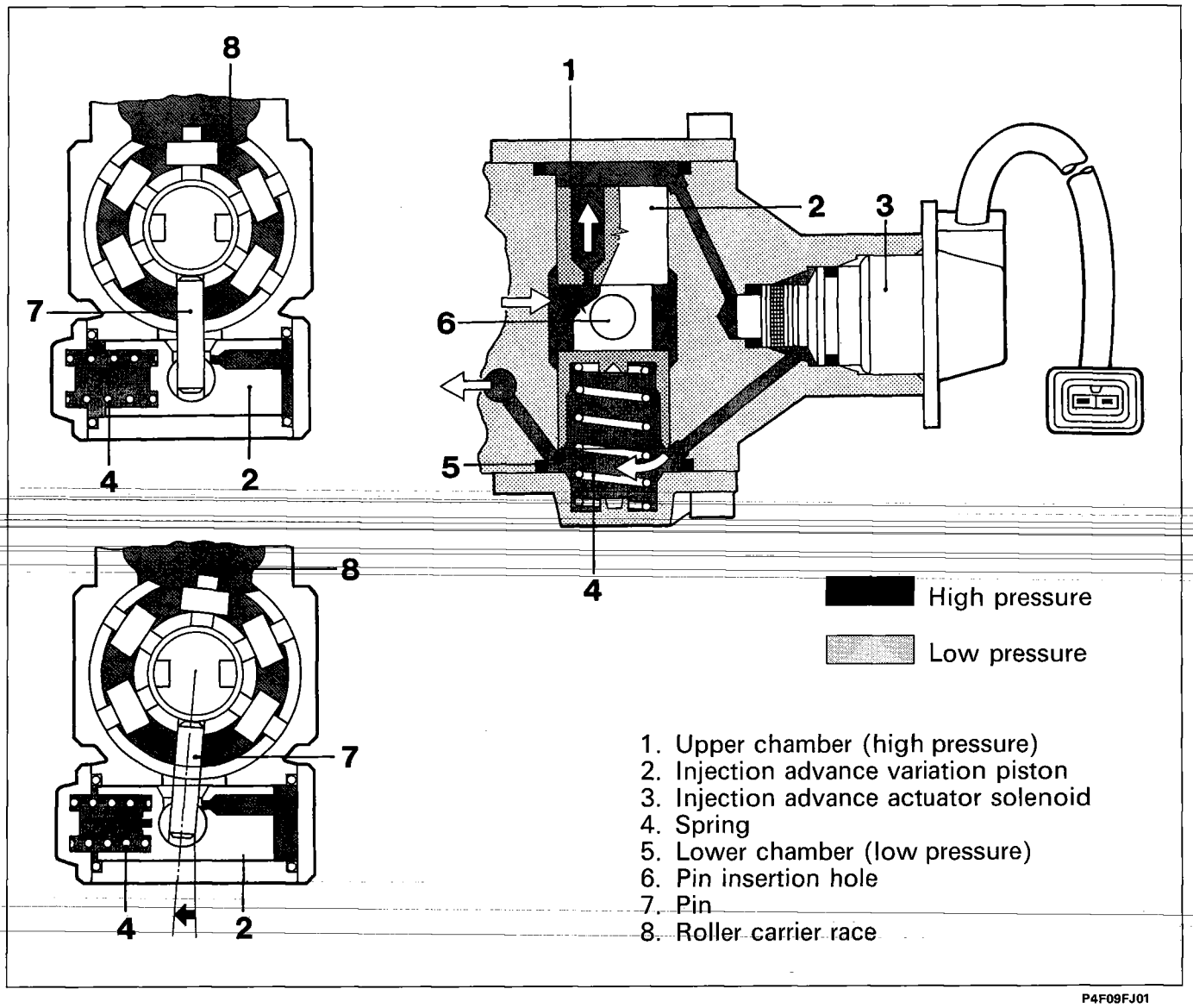

P4F09FJ01

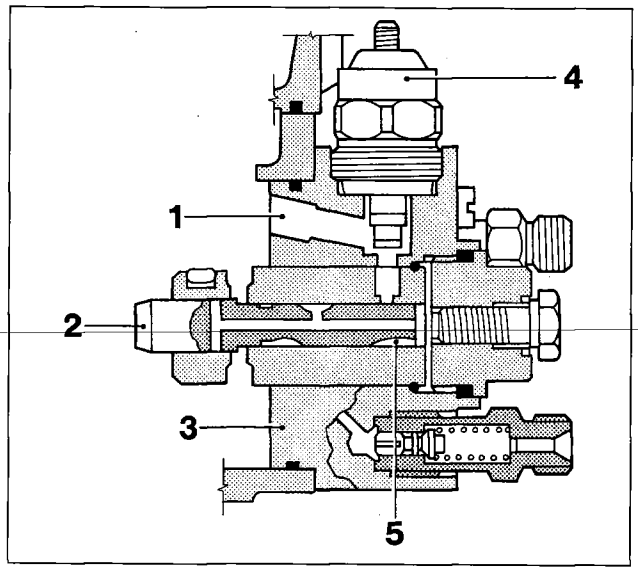

P4F10FJ01

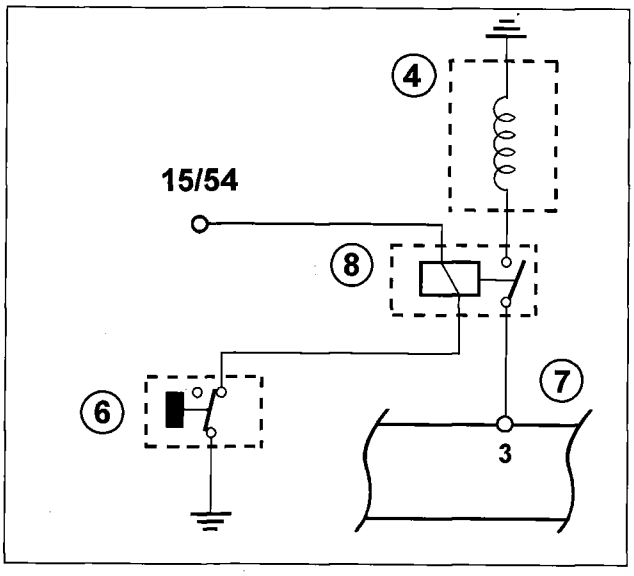

P4F10FJ02

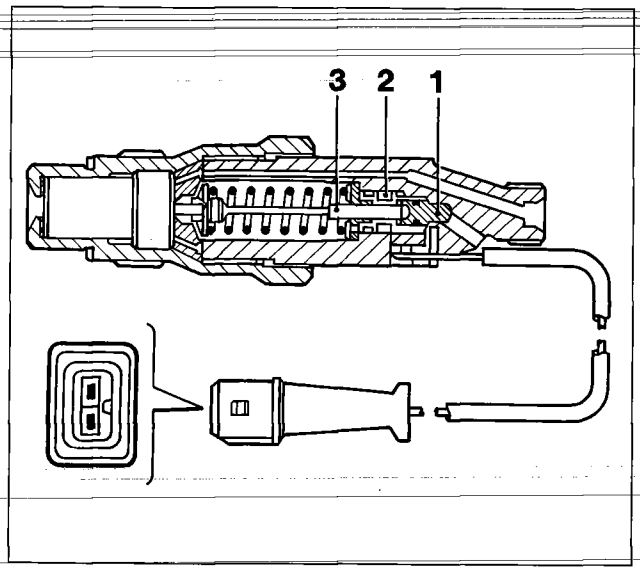

P4F10FJ03

Engine stop solenoid

Solenoid (4) stops the engine when current is cut off by blocking the hole connecting the pump interior and the pump element compartment. This in turn cuts off fuel flow to the injectors. Solenoid (4) may cut in either by turning key to STOP or following activation of inertia switch (6), which cuts off electrical power to the solenoid from the ECU (7) via N.A. relay (8).

1. Outlet hole
2. Distributor piston
3. Distributor head
4. Stop solenoid
5. High pressure chamber
6. Inertia switch
7. Injection electronic control unit
8. Relay

Controlled injector

The controlled injector informs the injection control unit on actual injection advance setting (start of injection phase, or beginning of needle valve movement). On the basis of this signal, the control unit corrects the advance set by the injection actuator until the theoretical value is achieved.
The injector is fitted to cylinder 1 and equipped with a device for identifying the exact moment injection begins in addition to wiring to relay the signal and inform the injection control unit.
The injector contains coil (2), needle valve (3) and regulation pin (1). The coil is electrically powered and generates a magnetic flow that affects the needle valve (3). When the valve begins to open, the nozzle for fuel injection, magnetic flow in coil (2) alters. The control unit identifies this point as the injection start instant and uses this as a basis for its advance regulation strategy.

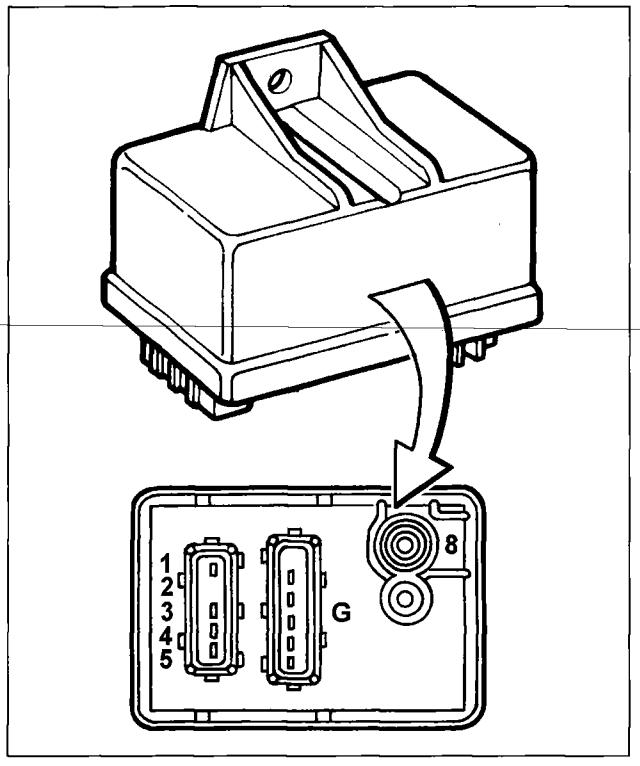

P4F11FJ01

Preheating control unit

The glow plugs are controlled by a preheating control unit controlled directly by the injection control unit.
This contains a "smart" relay that sends responses ("feedback") to the electronic injection control unit, which is thus kept up to date on faults in the preheating control unit or short circuits to earth in the glow plugs.

The figure shows connectors on the base of the control unit and their associated pin-outs.
Connections

1. Vehicle earth
3. Ignition switch (+15)
4. Pump electronic control unit - pin 8 (pre--postheating activation)
5. Pump electronic control unit - pin 41 (diagnosis)
8. Battery positive

G. Battery positive

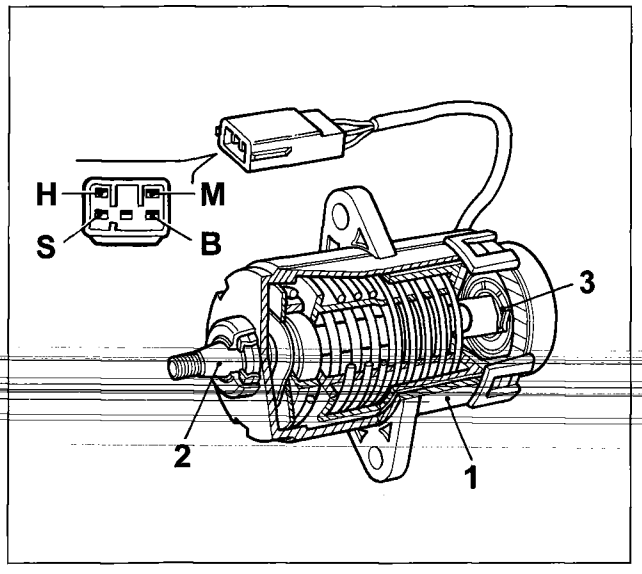

P4F11FJ02

Accelerator pedal potentiometer

Accelerator pedal position is converted to an electrical voltage signal from the potentiometer connected to the pedal, and sent to the ECU via an electrical connection. The signal is then processed and this data, together with information on engine rpm, is used to activate the injection flow flow regulation actuator.
The sensor consists of a case (1), fastened to the pedal unit by a flange. Shaft (2) connected to potentiometer (3) is fitted in an axial position on the flange.
A coil spring on the shaft ensures the correct resistance to pressure, while a second spring ensures return upon release.
An internal contact provides the control unit with an idle speed signal. This contact opens if rotation exceeds 9° during acceleration.

Air flow meter (debimeter)

This device measures the amount of air taken up by the engine and converts the value to an electrical signal, which is then relayed to the control unit.
This signal is used to:
- calculate the amount of fuel to be injected in order to achieve the highest possible fuel flow compatible with a smoke-free exhaust;
- control the amount of exhaust gas recirculated through the EGR valve.

Calculated intake air quantity is used to carry out an indirect measurement of the quantity of exhaust gas recirculated through the EGR valve.
If intake of a certain amount of air (Qam) is required for a given rpm, and the level sent by debimeter (Qar) is lower, the difference (Qgr) corresponds to the quantity of gas recirculated.

Qam - Qar = Qgr

Qam = Theoretical air quantity in memory
Qar = Actual air quantity
Qgr = Recirculated gas quantity

The quantity of air taken up by the engine exercises a thrust on floating plate (1) and this takes up a very specific angular position proportional to the pressure exercised by the incoming air flow (quantity of air taken up by the engine) and thrust of counter spring (2).
This angular position is converted into a voltage signal by potentiometer (3) connected rigidly to floating plate spindle.
Compensation plate (4) is coupled to a floating plate with the same effective surface area. This compensates for pressure fluctations due to alternating intake phases for the different cylinders because these act on both surfaces of the floating plate. In this way, forces arising are cancelled out and do not affect the measurement.

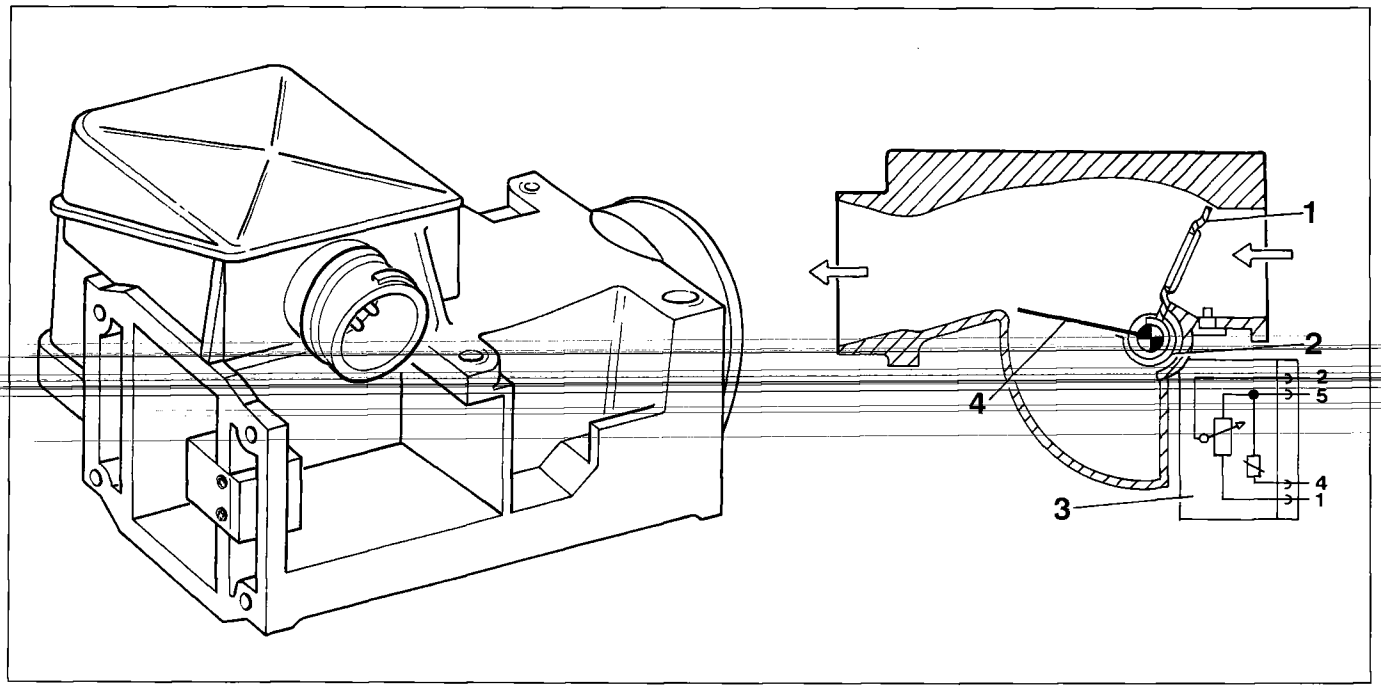

The air flow meter houses a temperature sensor with an NTC resistance. A signal from this is used by the ECU to compute air density and hence specific weight. This signal allows the control unit to compensate for injection pump regulation when the air/fuel weight ratio alters in order to obtain full combustion at all speeds.

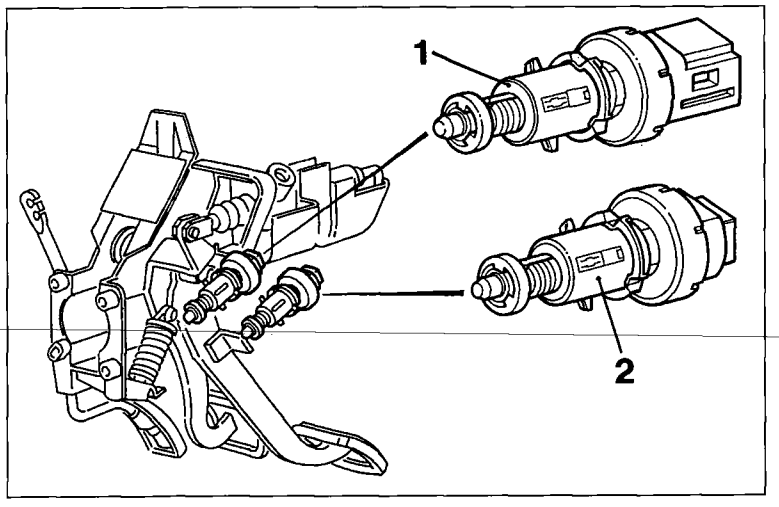

P4F13FJ01

Brake pedal sensor (1)

A switch on the brake pedal controls the vehicle brake lights. The same signal sends a signal to pin 26 of the injection control unit.
The signal received when the brake pedal is pressed informs the injection control unit that:
- the vehicle is decelerating;
- it should check the plausibility of the accelerator potentiometer signal.

Clutch pedal sensor (2)

An N.A. (normally open) switch on the clutch pedal is connected to terminal 28 of the control unit and the ignition-operated power source (15/54).
To check that the switch is N.A. (normally open), keep the clutch pedal pressed down. The injection control unit uses the clutch pedal signal to identify the speed engaged and gear change situations.

Rpm sensor and phonic wheel

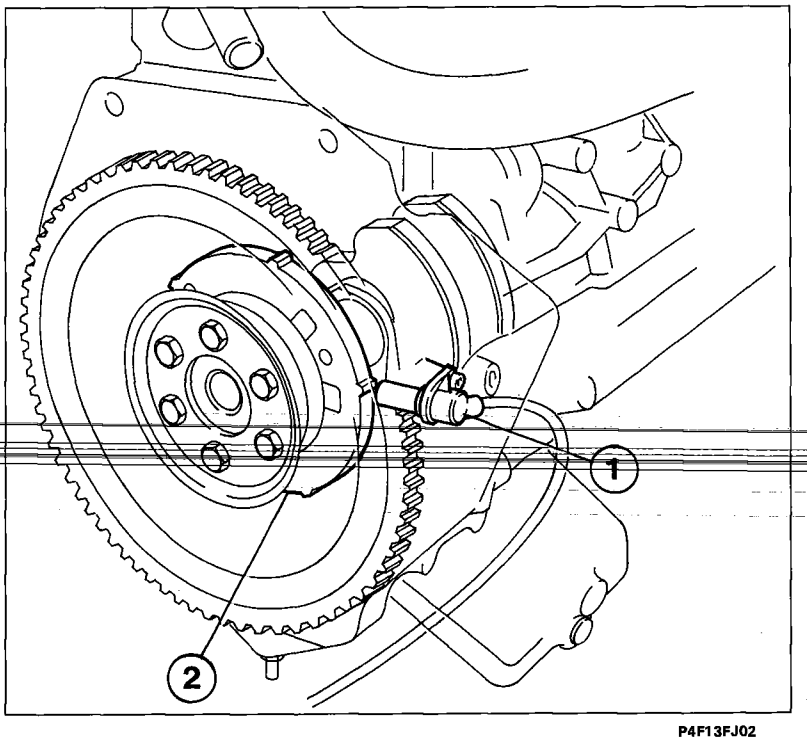

P4F13FJ02

The engine rpm sensor is fitted on the crankcase and faces a phonic wheel, located inside the crankcase, fitted to the crankshaft.
The sheet steel phonic wheel is fitted with 5 reference dowls located 72° apart on the outer part of the circumference.
When these dowels or teeth pass beneath the sensor, the gap changes to bring about a change irr tbe magnetic flux. This induces a current in the sensor spool coils.
This signal is sent to pin 47 of the control unit to measure rpm.

Coolant temperature sensor

Engine coolant temperature is measured by a sensor which consists of an NTC resistance. This alters its resistance in inverse proportion to temperature, as shown in the graph.
The ECU measures the voltage change proportional to the intensity of current flowing into the sensor through terminal 53.
The sensor must not be screwed in tighter than a torque of 15 Nm.

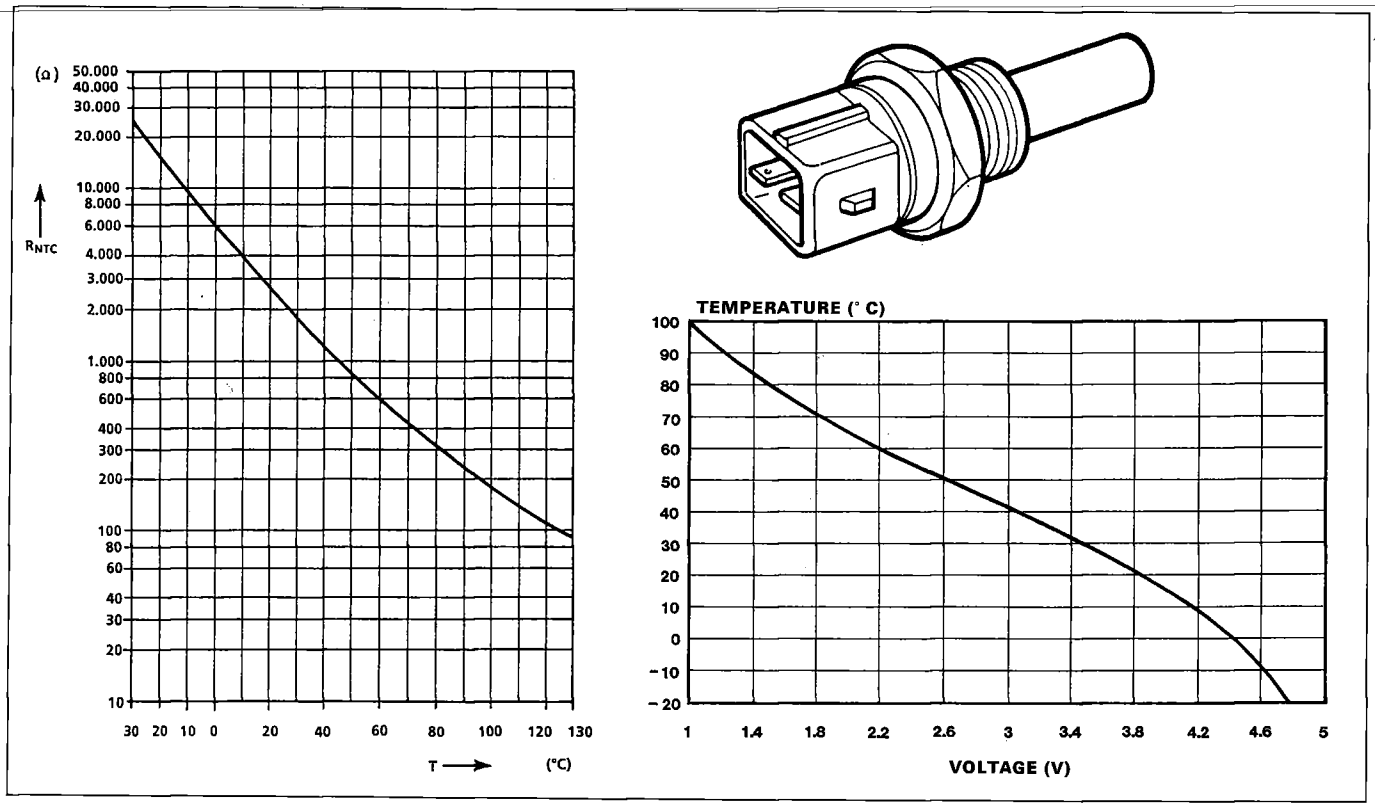

P4F14FJ01

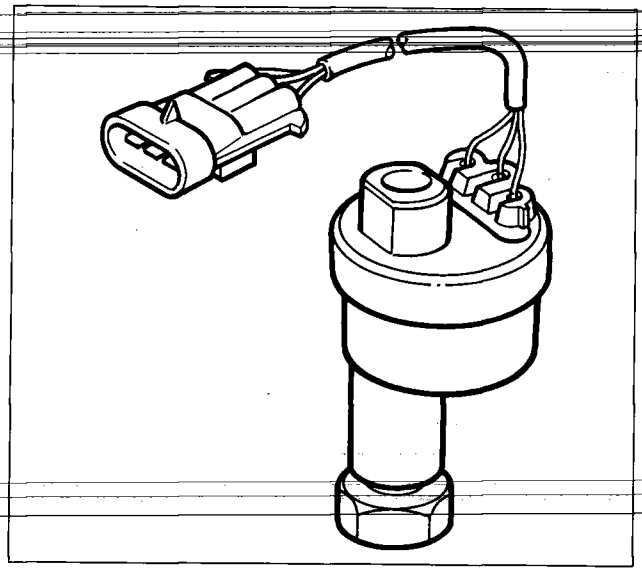

P4F14FJ02

Speed sensor

The speedometer sensor fitted on the gearbox sends a signal to the instrument panel in order to operate the speedometer and also sends a signal to terminal 29 of the injection control unit.
The speedometer sensor provides the ECU with information on vehicle speed and, together with the clutch pedal sensor, the gear currently engaged;

E.G.R. system

The system consists of a PIERBURG E.G.R. valve (1) and a BORG WARNER vacuum modulator solenoid (2).
The ECU governs the BORG WARNER modulator solenoid on the basis of fuel flow, engine rpm, intake air temperature and coolant temperature (up to 60° C). This modulated vacuum controls the E.G.R. valve, which in turn moves a plunger to regulate the flow of burnt gas from the exhaust manifold to the intake manifold.
The ECU is kept constantly informed about recirculated gas quantity using data from the flow meter. The atmospheric pressure signal (via a sensor inside the injection control unit) is important for control of the BORG WARNER modulator valve because it recognises when the vehicle is being driven at altitude so that the recirculated gas quantity can be reduced to prevent the engine from smoking.

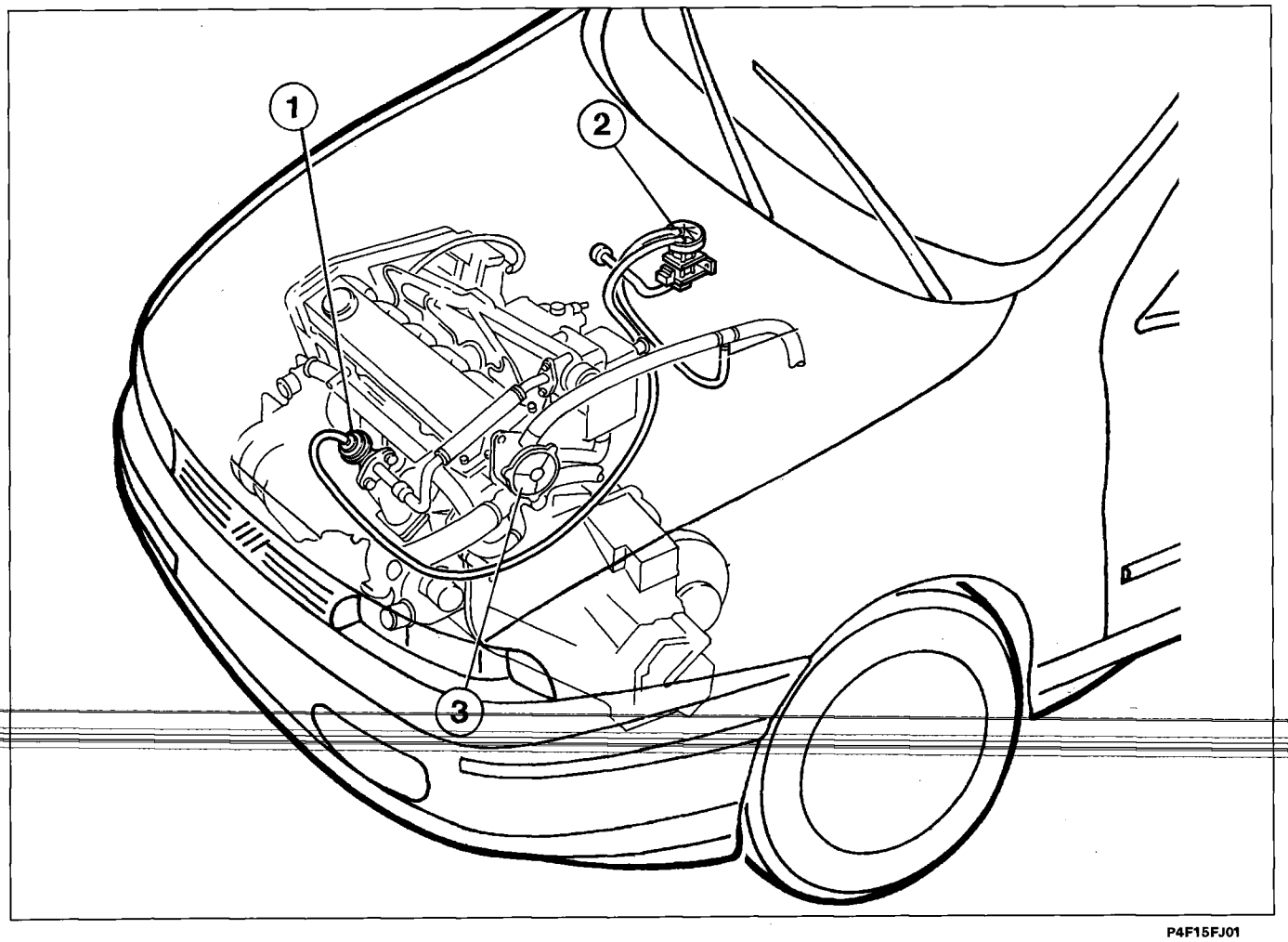

P4F15FJ01

BORG WARNER vacuum modulator solenoid

BORG WARNER solenoid (2) controls the E.G.R. valve (1) by modulating output pressure of vacuum pump (3) according to atmospheric pressure.
The injection control unit controls the BORG WARNER solenoid by means of a square wave signal.

Copyright Fiat Auto

Operation

Vacuum reaches chamber E from duct F (case I), because the force of spring (6) acts on mobile unit (4) and shunt valve (5) opens up a passage.
The vacuum then flows through compensation port D to chamber B and surfaces of disc plunger (3). Once the forces acting on disc (3) are balanced, the atmospheric pressure in duct A enters chamber B to move the mobile unit downward (case II). The plunger of valve (5) therefore closes duct F and brings chamber E into communication with chamber C at atmospheric pressure to reduce the vacuum level in duct E.
The reduced vacuum level or increased absolute pressure in chamber E causes mobile unit (4) to rise (case I) to close passage C. Valve (5) therefore takes up an ideal position (E in communication with F) for the cycle to be repeated.

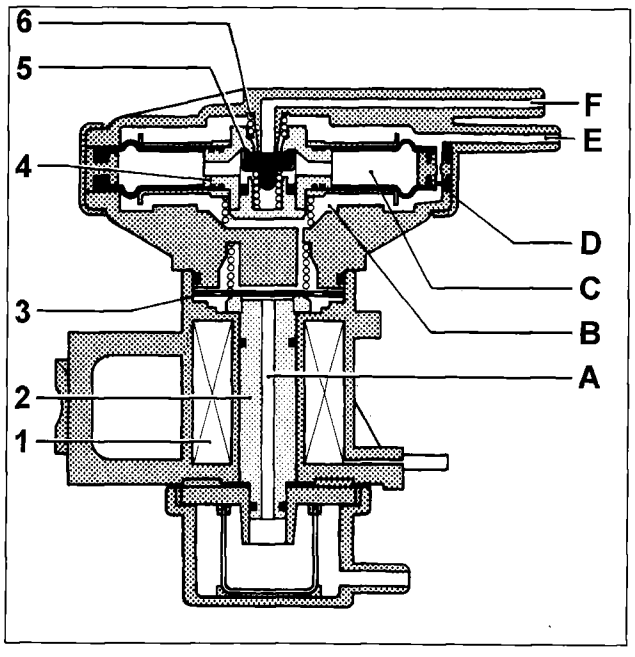

P4F16FJ01

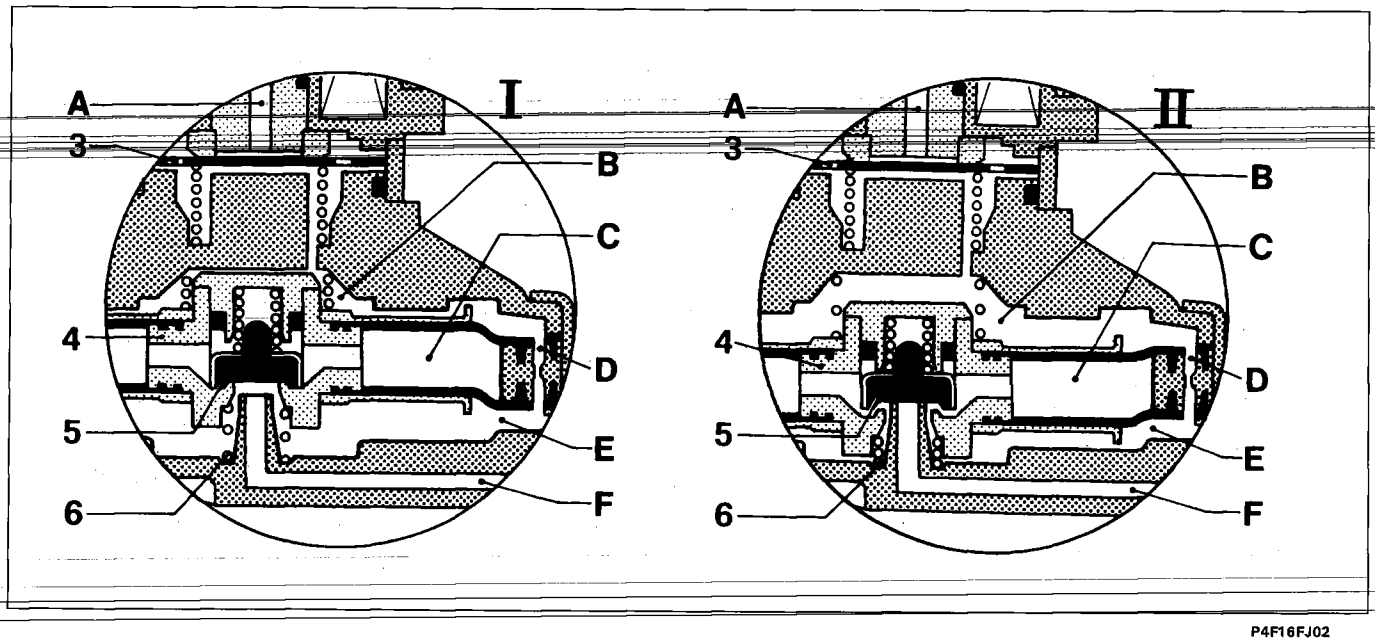

P4F16FJ02

Oxidising catalytic converter

The oxidising catalytic converter is a simple and effective post-treatment device used to oxidise CO, HC and particulate, which are converted to carbon dioxide CO_2 and water vapour H_2O.
The catalytic converter used is oval in shape, with a corrugated, herringbone steel mount impregnated with Palladium and a silicon alloy. Its volumetric capacity is 1.4 litres and its density is 35 cells per square centimetre.
Exhaust gases flowing through the chambers heat the catalytic converter to trigger conversion of pollutants to inert compounds.
Individual pollutants are reduced with the following efficiency:
- 50% for CO;
- 50% for HC;
- 30% for particulate, which is a group of combustion residues (partially condensed at a temperature less than 52°C) made up of:
  1. carbon (ash); 2. saturated hydrocarbons; 3. aromatic hydrocarbons; 4. metals; 5. water; 6. sulphur compounds.

The catalytic converter treats the saturated and aromatic hydrocarbons (2-3) while the remaining elements are eliminated through the exhaust.
From 350 °C, the fuel sulphur content is oxidised to sulphur dioxide SO_2 and sulphur trioxide SO_3. When these come into contact with water vapour, they form the sulphurous and sulphuric acids responsible for acid rain.
When fuel sulphur content is reduced from its present 0.3% to 0.05%, all Diesel engine exhaust emissions will be fully converted.
The converter service temperature window within which the highest conversion rate compatible with minimum sulphur oxidation occurs is between 200 °C and 350 °C.
If the catalytic converter is of the correct size, temperature can be controlled and maintained within the optimal service window, limiting oxidation of sulphur compounds.
The catalytic converter also eliminates the characteristic exhaust gas smell.

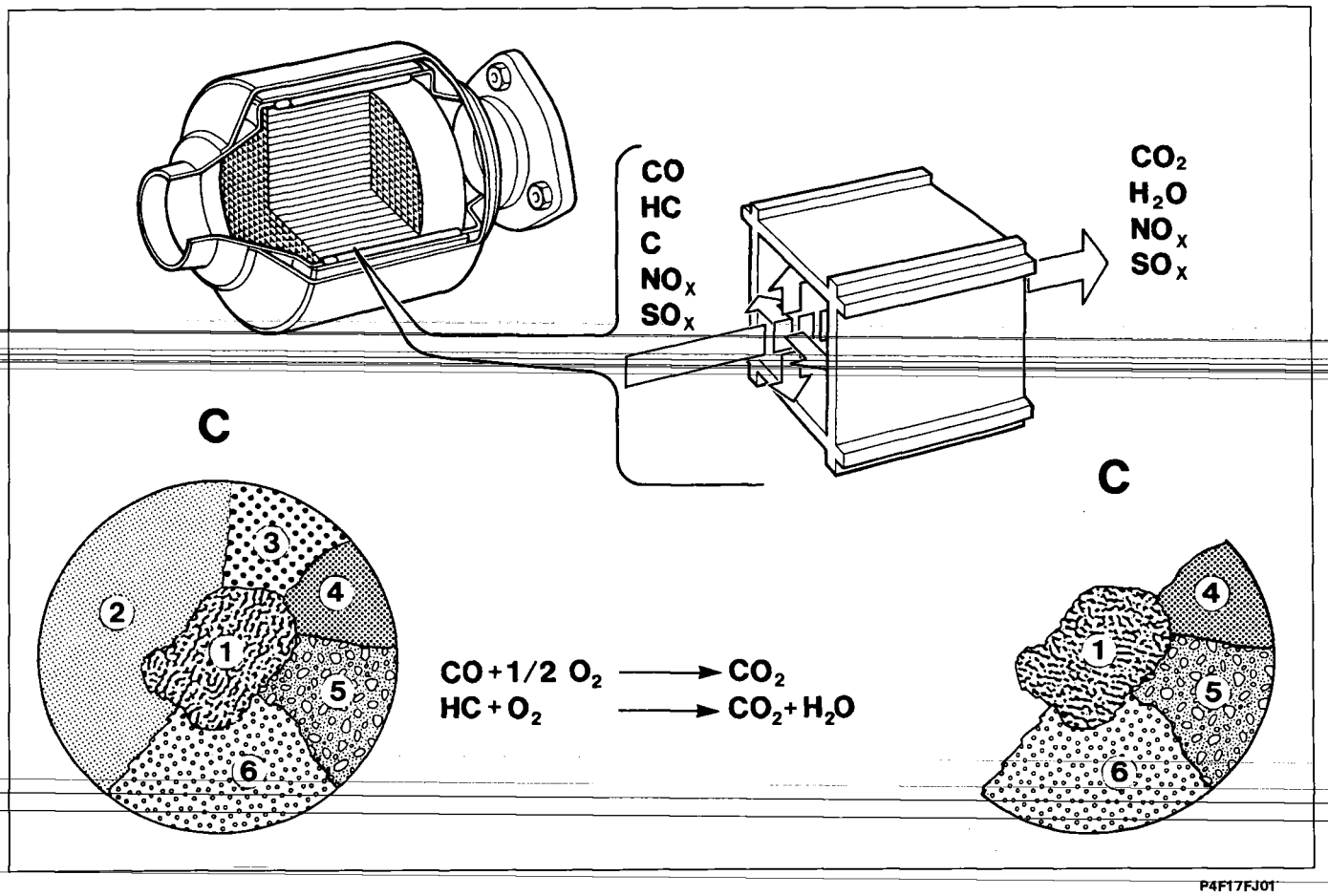

P4F17FJ01

CONTROL UNIT PIN OUT

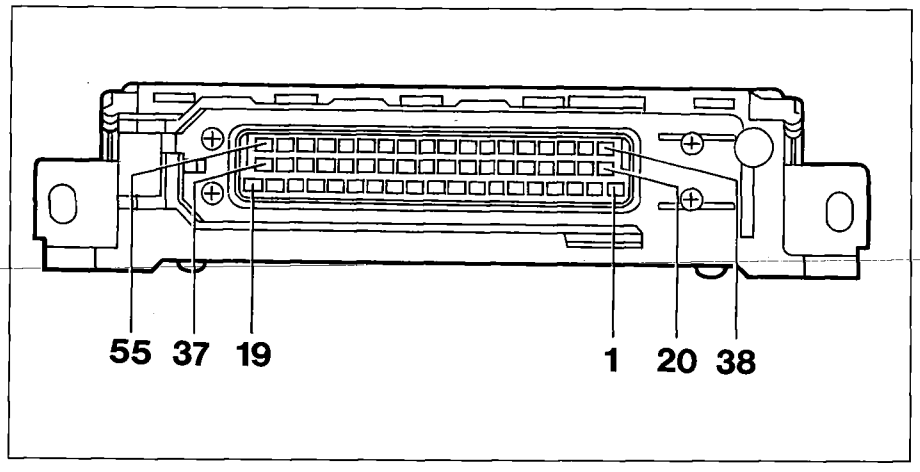

P4F18FJ01

1. Fuel flow actuator
2. Fuel flow actuator
3. Engine stop solenoid
4. Infocenter
5. Controlled injector
6. Solenoid for E.G.R..
7. N.C.
8. Glow plug control unit activation
9. A.C. compressor
10. Injection advance actuator
11. Glow plug activation warning light
12. Earth for controlled injector
13. Common sensor earth
14. Cursor position sensor
15. Main relay
16. Control unit power supply via relay
17. Control unit power supply via relay
18. Earth
19. Earth
20. N.C.
21. Cursor position sensor (reference coil)
22. N.C.
23. N.C.
24. N.C.
25. Idle switch on accelerator pedal
26. Brake light switch
27. N.C.
28. Clutch pedal switch
29. Vehicle speed sensor
30. N.C.
31. N.C.
32. N.C
33. 5V accelerator pedal position sensor
34. 5V debimeter
35. Fuel temperature signal
36. N.C.
37. Accelerator pedal position sensor
38. Debimeter signal
39. Cursor position sensor signal
40. N.C.
41. Glow plug operation signal
42. K line and immobiliser
43. N.C.
44. Compressor activation request signal
45. N.C.
46. N.C.
47. Rpm sensor
48. N.C.
49. N.C.
50. Signal for tachometer
51. N.C.
52. Air temperature signal
53. Coolant temperature signal
54. N.C.
55. + ignition key

POWER SUPPLY SYSTEM COMPONENT LOCATION

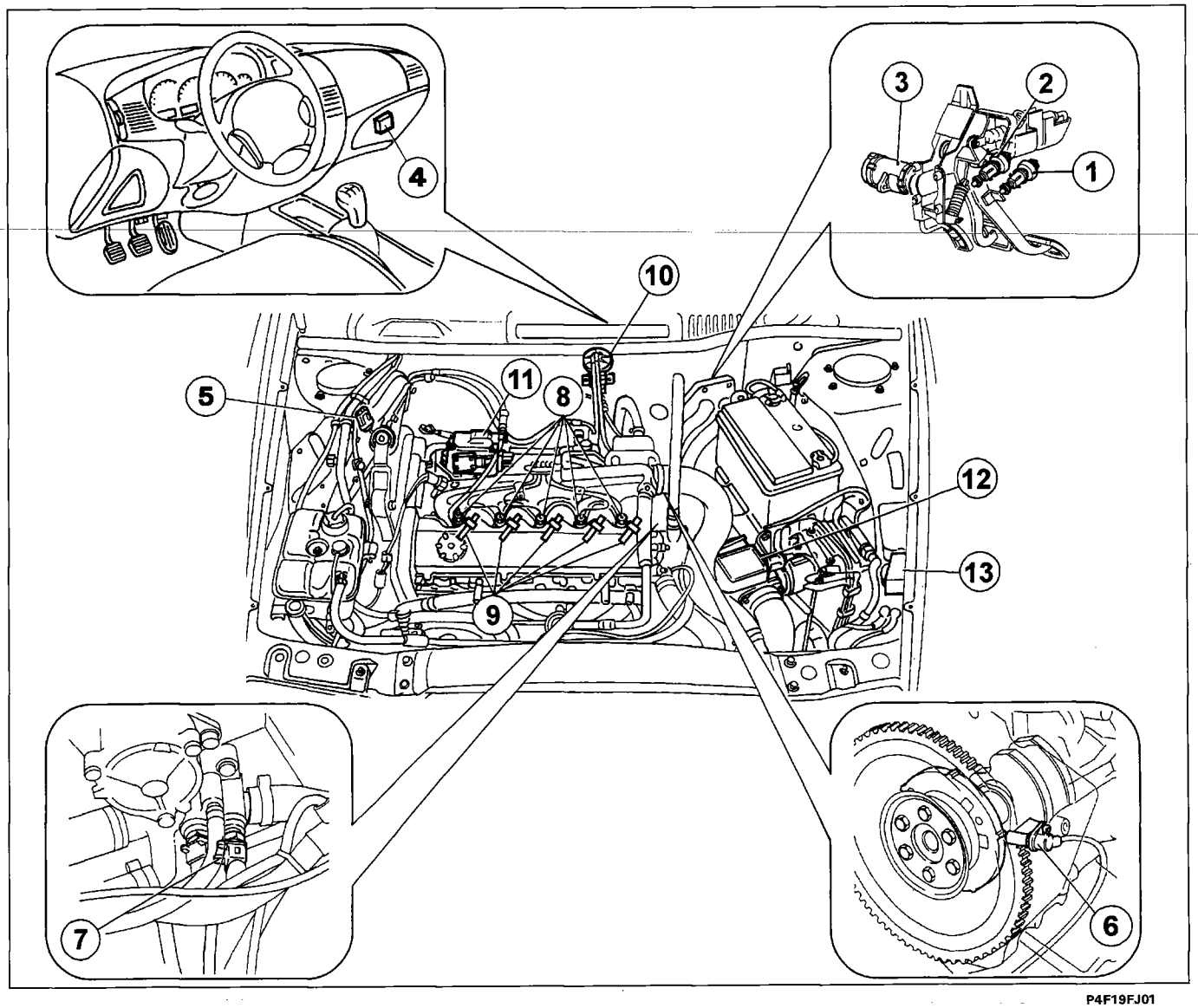

P4F19FJ01

Key:

1. Clutch pedal switch
2. Brake pedal switch
3. Accelerator potentiometer
4. Electronic control unit
5. Tester socket
6. Rpm sensor
7. Coolant temperature sensor
8. Injectors
9. Heater plugs
10. Borg Warner modulator solenoid
11. Bosch injection pump
12. Debimeter
13. Glow plug control unit

Copyright Fiat Auto

WIRING DIAGRAM

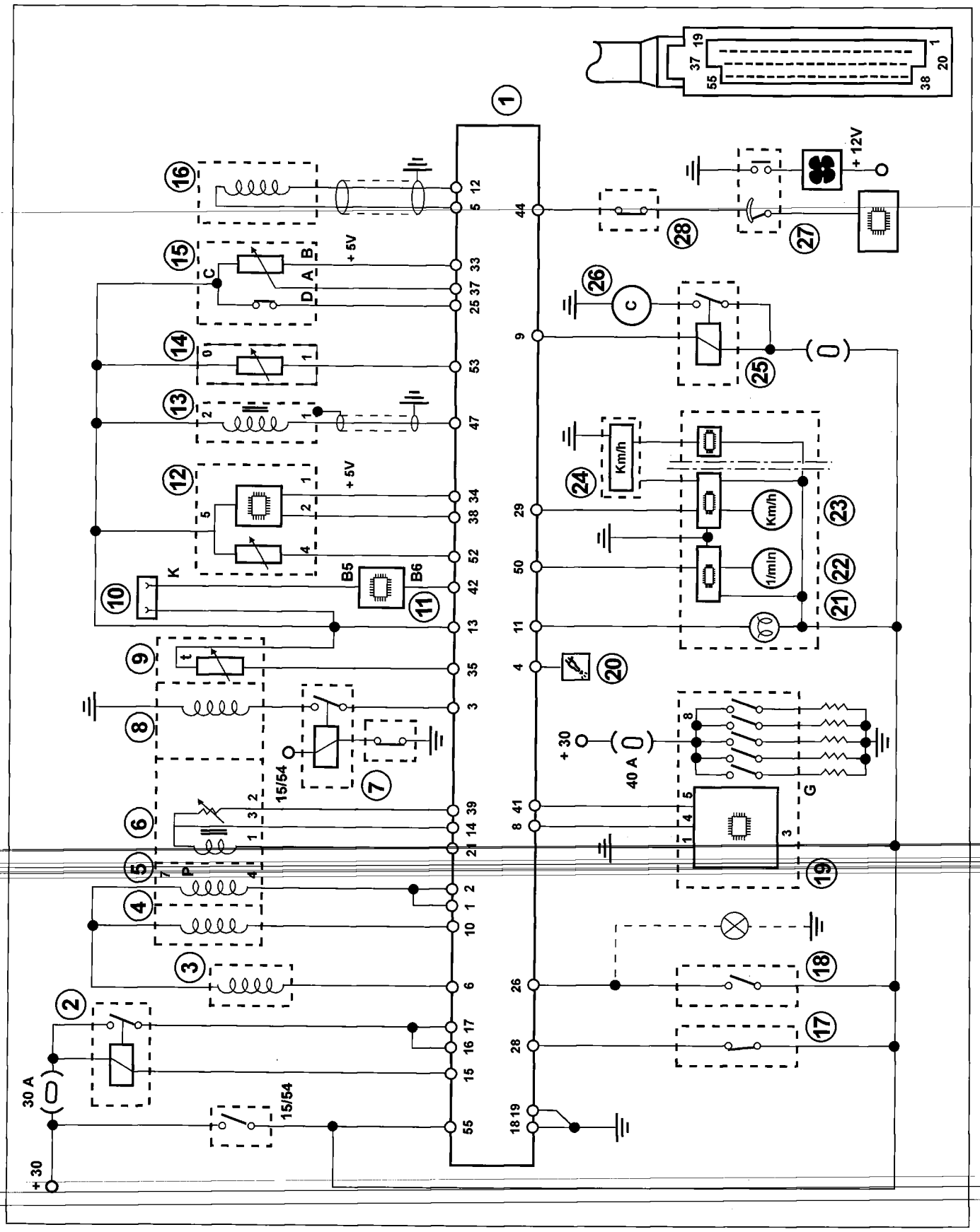

P4F20FJ01

Key to wiring diagram

1. Electronic control unit
2. System protection relay
3. Borg-Warner modulator solenoid
4. Injection advance actuator
5. Fuel quantity actuator
6. Fuel quantity actuator position control
7. Inertia switch
8. Engine stop solenoid
9. Fuel temperature sensor
10. Diagnostic socket for FIAT/LANCIA tester
11. Immobilizer
12. Debimeter with air temperature sensor
13. Engine rpm sensor
14. Water temperature sensor
15. Accelerator pedal potentiometer with idle switch
16. Controlled injector
17. Clutch pedal switch
18. Brake pedal switch
19. Preheating electronic control unit
20. System failure warning light
21. Glow plug warning light
22. Rev counter
23. Speedometer
24. Speedometer sensor
25. Air conditioner compressor control relay
26. Air conditioner compressor
27. Three stage pressure switch
28. Anti-frost thermostat

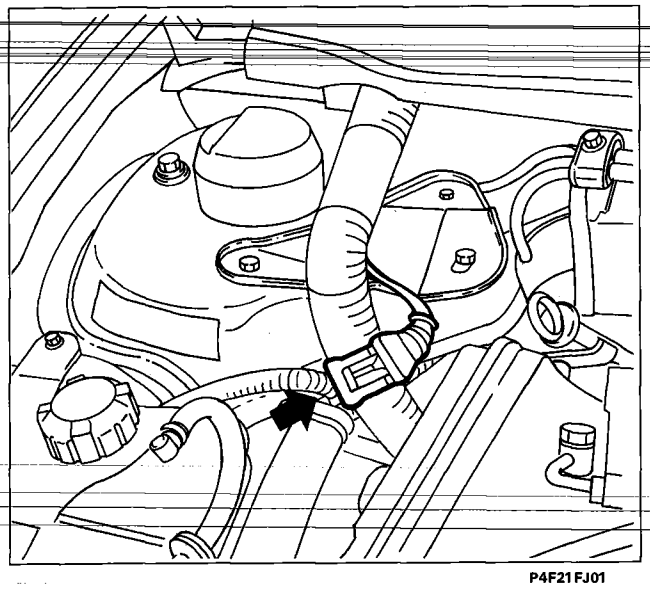

P4F21FJ01

Location of Fiat/Lancia Tester

Copyright Fiat Auto

Air conditioner

The injection electronic control unit manages the electromagnetic coupling of the air conditioning system compressor (3) in accordance with a strategy designed to avoid service conditions that would impair engine performance.
When the compressor is activated, the injection control unit increases idling injection pump output by means of the fuel quantity actuator in order to adjust the engine to the higher power requirement.
The injection control unit cuts off the supply to the compressor for about 6 seconds under the following conditions:
- take-off;
- acceleration;
- engine not warmed up

This power cut continues even if one of these conditions disappears before the 6 seconds have elapsed.
If the engine coolant overheats, the injection control unit cuts off power to the compressor until the coolant is restored to a temperature within the specified service range.
Power to the compressor is cut permanently if one of the injection system faults listed below occurs:
- speed signal fault;
- accelerator potentiometer signal fault;

The air conditioner activation system reaches terminal 44 of injection control unit (1) through three-stage pressure switch (2A). Operating with a slight delay, to ensure idle speed adjusts to the new power requirement, the injection control unit (1) earths terminal 9; at this point, relay (5) closes its contacts and one positive supplies electromagnetic coupling of compressor (3).

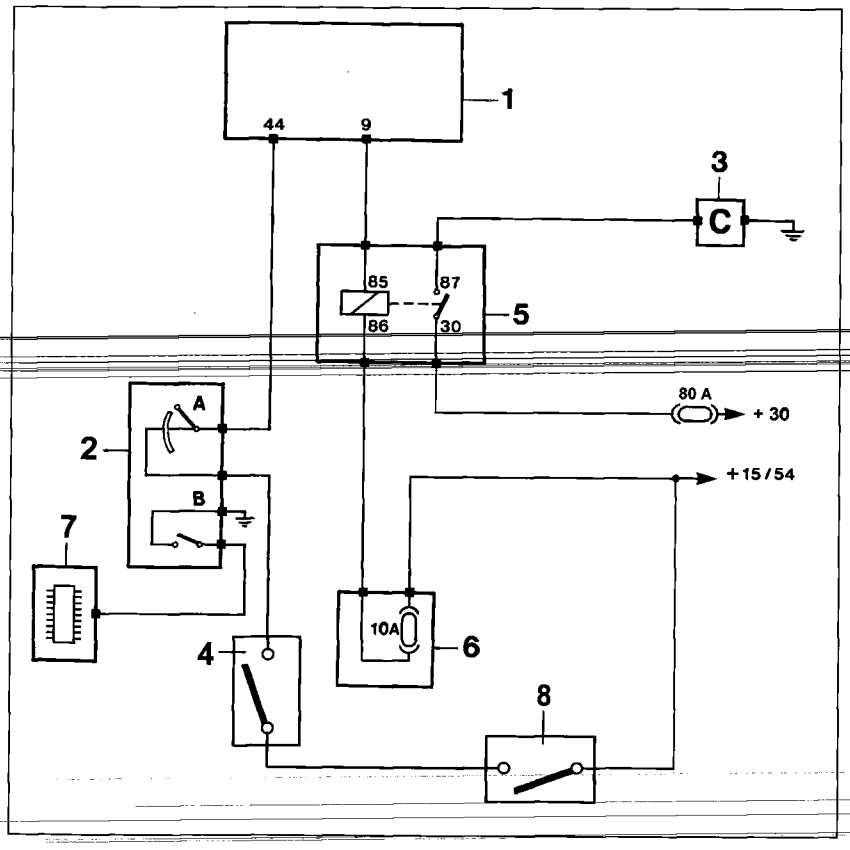

P4F22FJ01

1. Bosch electronic control unit
2. A-Three stage pressure switch
   B-Pressure switch
3. Compressor electromagnetic coupling
4. Defrosting sensor
5. Relay
6. Fuse
7. Cooling fan control circuit
8. Air conditioner activation button

CHECKING, REPLACING AND ADJUSTING ACCELERATOR PEDAL POTENTIOMETER

To check accelerator pedal potentiometer, disconnect wiring connector and use an ohmmeter to check the following resistances:
- between lead H (grey and lead M (brown) 1kΩ; during acceleration, the ohmmeter will indicate an open circuit because idle contact opens
- between lead H and lead S (pink) 2kΩ; during acceleratoin, the ohmmeter will indicate an open circuit because idle contact opens
- between lead S and lead M 1kΩ
- between lead B (white) and lead S, check resistance varies continually from 1-2kΩ
- between lead B and lead M, check that resistance varies continuously from 1-2kΩ

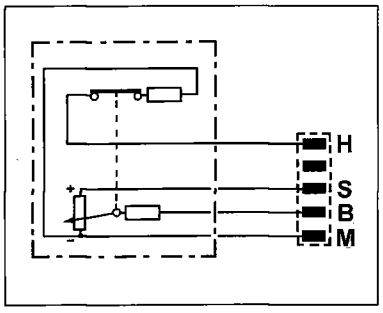

P4F23FJ01

If the accelerator pedal position sensor is changed, the pedal assembly must be removed. This operation is necessary to permit potentiometer adjustment.
The operation is carried out in two stages:

Stage 1

Fitting control lever to potentiometer

Fit lever to accelerator potentiometer control shaft in the correct position (see figure)
Lever angle with regard to centre-line of sensor fitting holes must be 10°, positioned in opposite direction to direction in which lead emerges from sensor base.

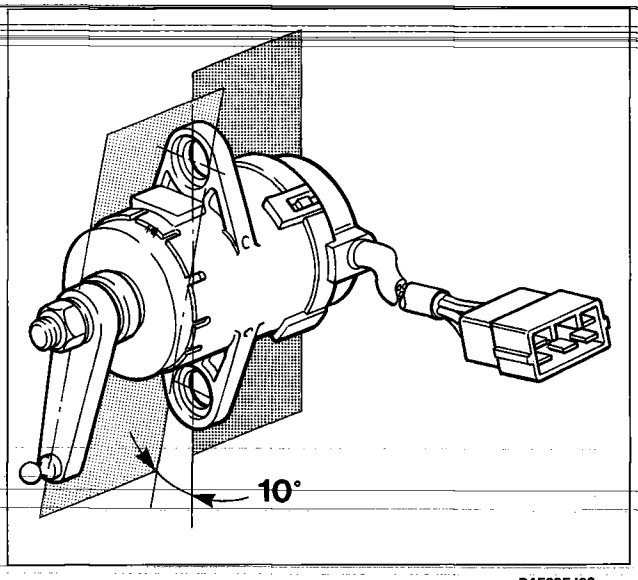

P4F23FJ02

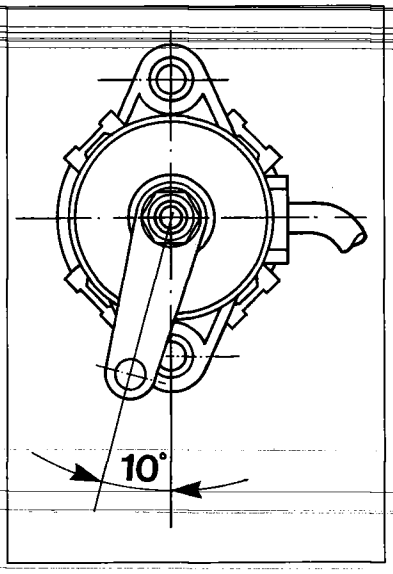

P4F23FJ03

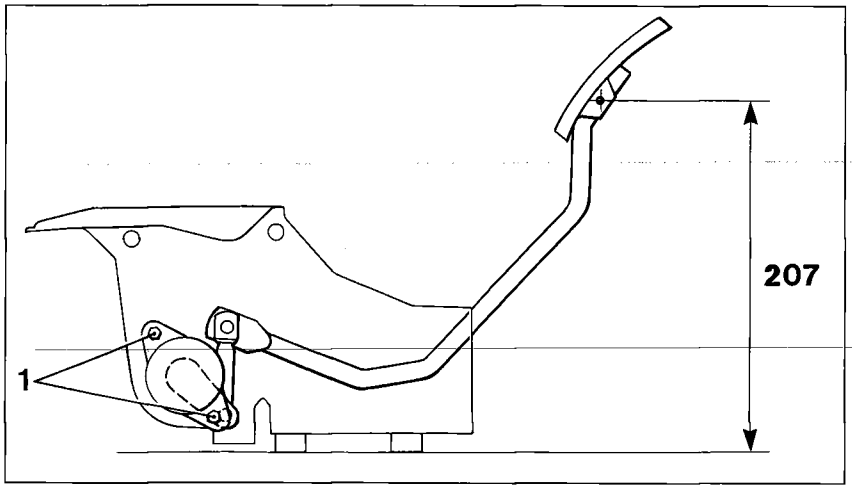

P4F24FJ01

Stage 2

Fitting potentiometer to pedal assembly

Fit potentiometer in its seat, position retaining screws (1) and connect linkage.
Rest assembly on a reference plane as illustrated in the figure and measure 207 millimetres from the plane to the rivet connecting pedal to lever.
With the pedal in this position, tighten screws (1) retaining accelerator potentiometer.

INJECTION PUMP OPERATION

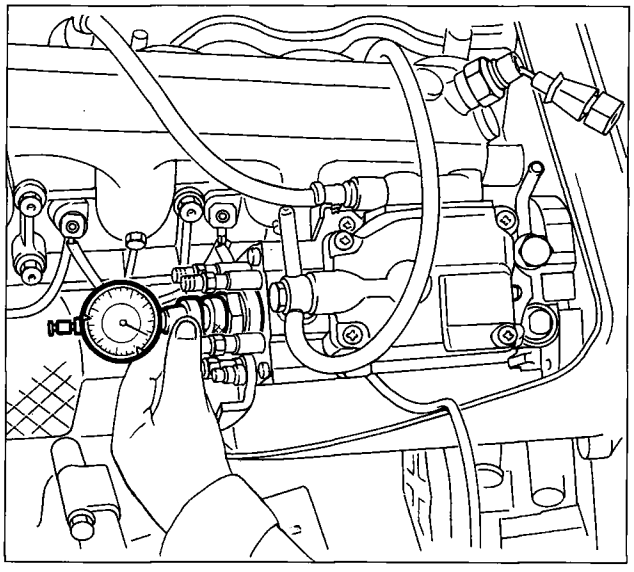

P4F24FJ02

- Remove the cap on the pump cover and tighten tool 1865090000 in place, with gauge probe in contact with distributor piston crown.
- Turn the engine against its direction of rotation until pump distributor piston reaches B.D.C. indicated by the guage. Zero the gauge in this position.
- Turn the engine in its direction of rotation until engine piston n°1 is at T.D.C. Pump distributor piston must have travelled through 0.75 mm under these conditions.
- If travel is not 0.75 mm, turn pump case in its slot until specified value can be read off gauge. Tighten screws fastening pump to mount to a torque of 2.5 da Nm.

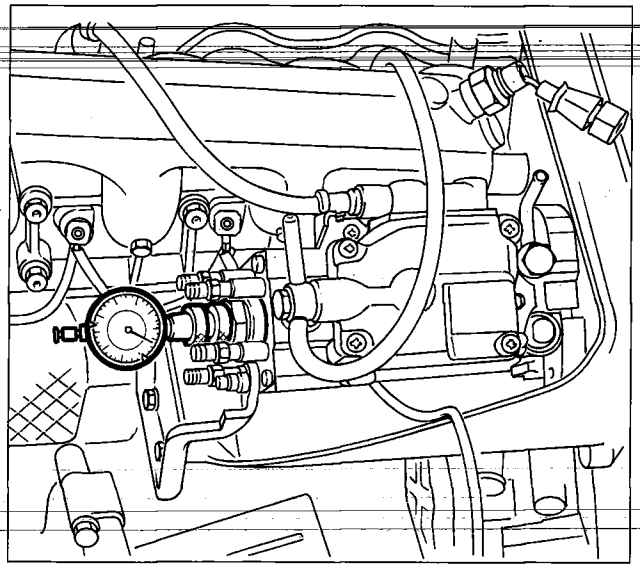

P4F24FJ03

page

COMPOSITION AND OPERATION

- Clutch with mechanical release device 1
- Clutch with hydraulic release device 2

REMOVING - REFITTING

- Removing 5
- Driven disc - pressure plate 5
- Refitting 5

CLUTCH OPERATION

- Thrust bearing 6
- Fork control shaft 7
- Thrust bearing sleeve 8
- Clutch pedal 8
- Adjusting clutch pedal position 9
- Removing-refitting clutch cable 10
- Removing - refitting hydraulically operated clutch components 11
- Clutch pump 11
- Operating cylinder 15
- Bleeding 15

Copyright Fiat Auto

CLUTCH WITH MECHANICAL RELEASE DEVICE (1370 - 1581 - 1747 - 1910 TD engines)

The clutch is the dry, single plate type, with the thrust bearing always in contact with the pressure plate spring.
The driven disc is driven by the pressure exerted by a diaphragm spring.
The clutch release is achieved by means of a cable mechanically controlled by the pedal.
The mechanical clutches fitted are all the "thrust" type (see later section).

Technical data		1370	1581	1747	1910 TD
Spring loading	daN	360	400	500	485
External diameter	mm	190	200	215	215
Internal diameter	mm	130	137	145	145
Pedal travel	mm	155±10	170±10		

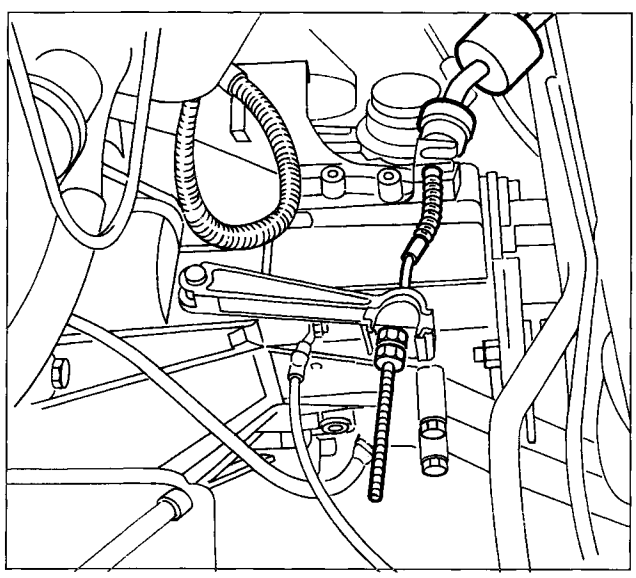

P4F001C01

Clutch release cable with "traction cable" (for 1370 12v)

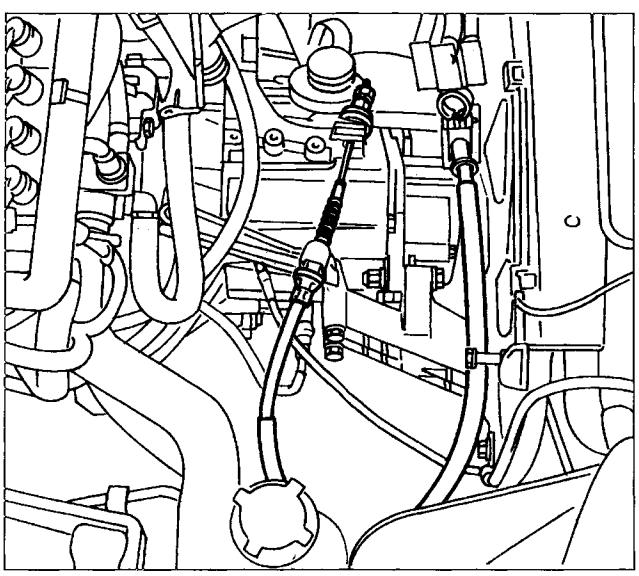

P4F001C02

Clutch release cable with "thrusting outer casing" (for 1581, 1747, 1910 TD)

Copyright by Fiat Auto

CLUTCH WITH HYDRAULIC RELEASE MECHANISM (1998 20v - 2387 TD)

Composition

In order to improve the noise levels and performance a hydraulic device has been fitted on the 1998 20v and 2387 TD versions. This device is made up of a reservoir, similar to the braking system (1), a pump (2) fixed to the pedals assembly and an operating cylinder (3) fixed to the bell housing.

The result is more comfortable driving because there is a reduction in the vibrations transmitted by the power unit due to the damping effect of the hydraulic system.

The adoption of this device dispenses with the need for periodic adjustment because any clearances are cancelled and the wear of the driven disc is recovered automatically.

Clutch with hydraulic release device for 1998 20v version

1. Reservoir
2. Clutch pump
3. Operating cylinder

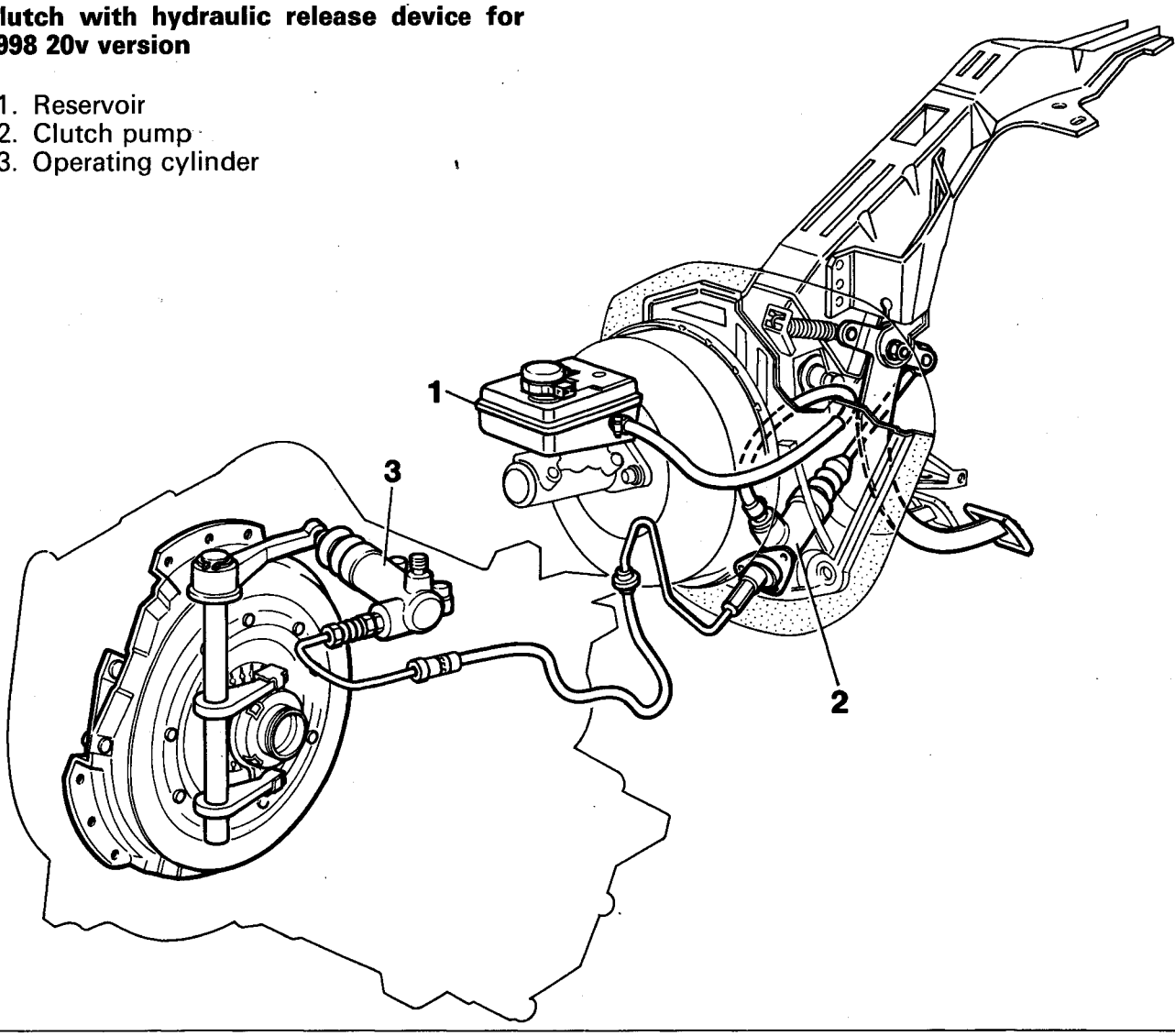

P4F002C01

Operation

The clutch is the dry, single plate type, with a hydraulic release device and thrust bearing always in contact with the pressure plate spring. The driven disc is driven by the pressure exerted by a diaphragm spring.

The clutch release is achieved by means of a pump which, operated by the pedal, transmits the increase in pressure of the fluid to the operating cylinder piston. The latter acts on the clutch fork, by means of a push rod, moving the thrust bearing and thereby overcoming the action of the diaphgram spring.

The thrust bearing is constantly in contact with the diaphgram spring, like the operating cylinder push rod in relation to the fork.

		1998 20v
Spring loading	daN	600
External diameter	mm	228.6
Internal diameter	mm	155
Pedal travel	mm	136

Superseded

Technical data

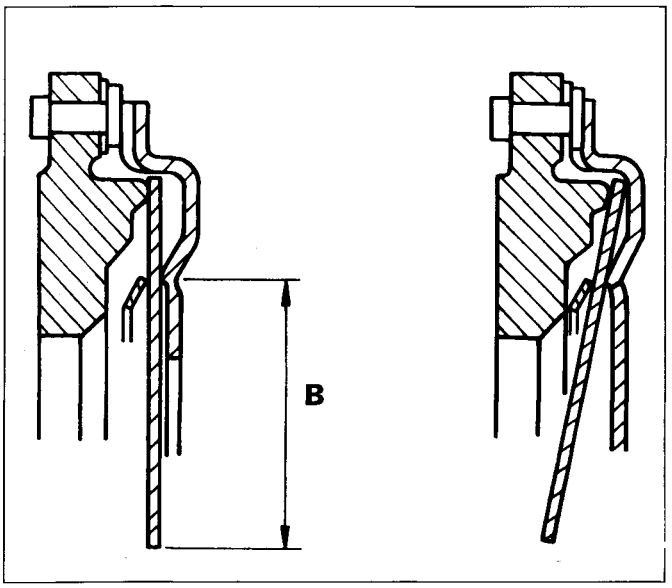

P4F003C01

Partial section of "thrust" clutch (for 1370 - 1580 - 1747 - 1998 20v - 1910 TD engines)

B = Lever arm

18.

Clutch with "drawn" hydraulic release mechanism for 2387 TD version

1. Reservoir
2. Clutch pump
3. Operating cylinder

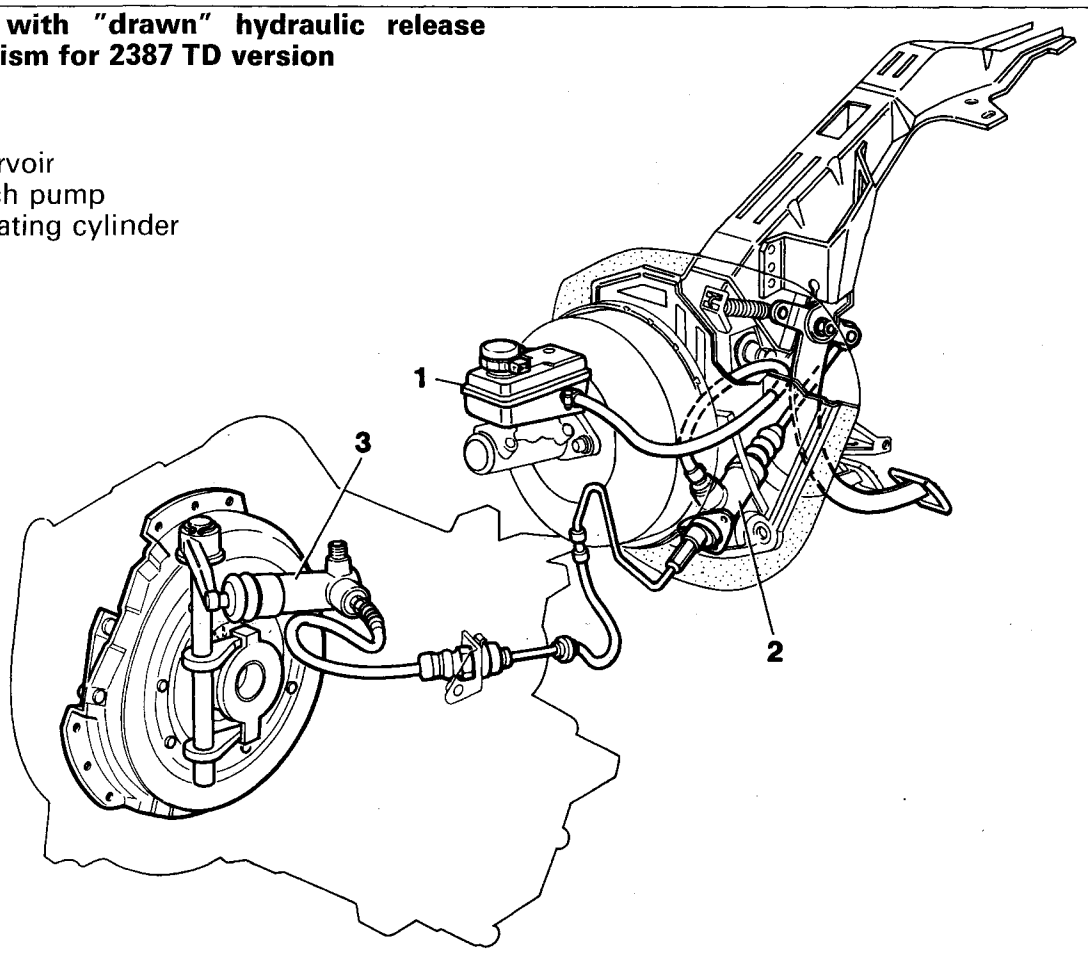

P4F004C01

The "drawn" solution allows the use of a diaphragm spring with a greater loading and makes it possible to produce and transmit a higher torque for the size of the assembly.
In addition, thanks to a more favourable lever arm (A) compared with the conventional "thrust" solution, this solution allows the release of the clutch with a lesser force.

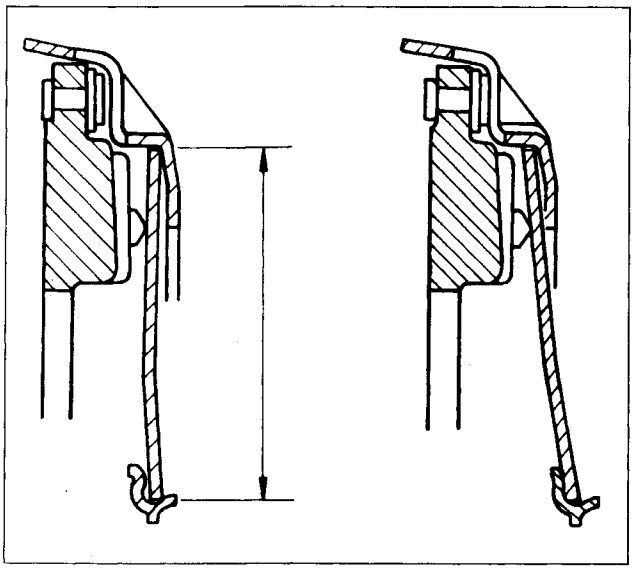

P4F004C02

Partial section of "drawn" clutch

A = Lever arm

Technical data		2387 TD
Spring loading	daN	600
External diameter	mm	228.6
Internal diameter	mm	155
Pedal travel	mm	136

Superseded,

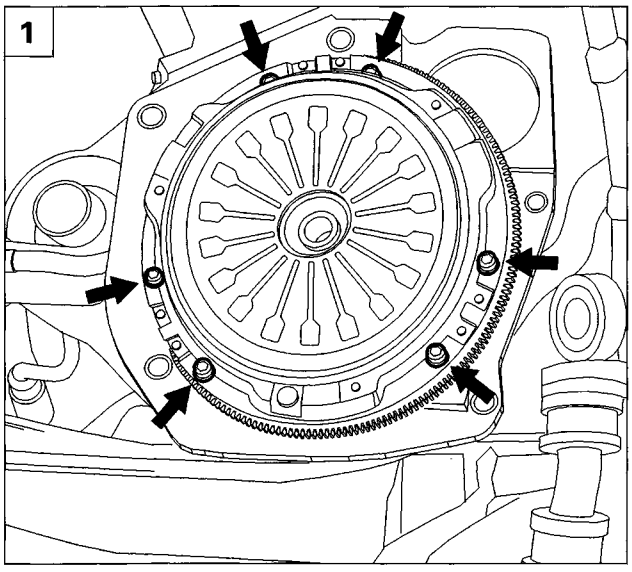

P4F005C01

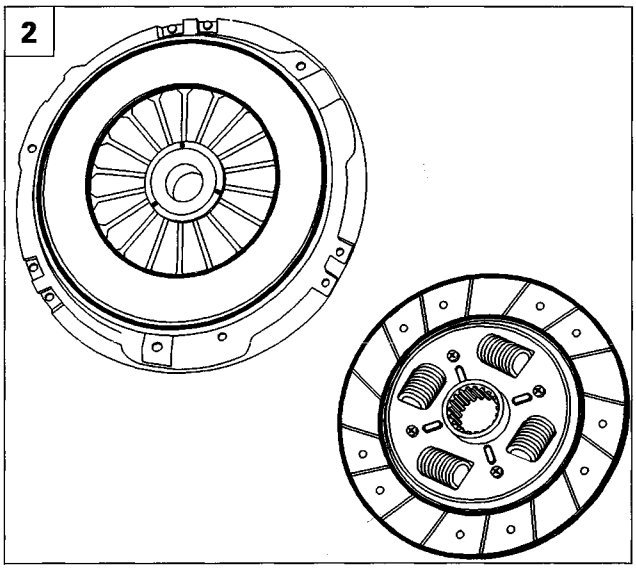

P4F005C02

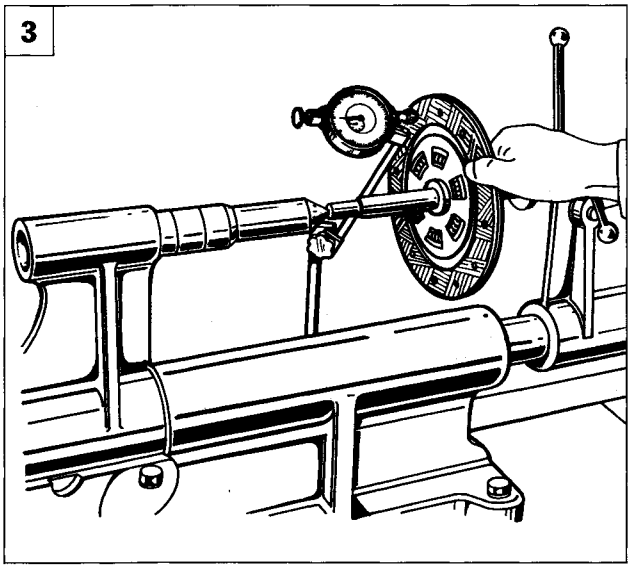

P4F005C03

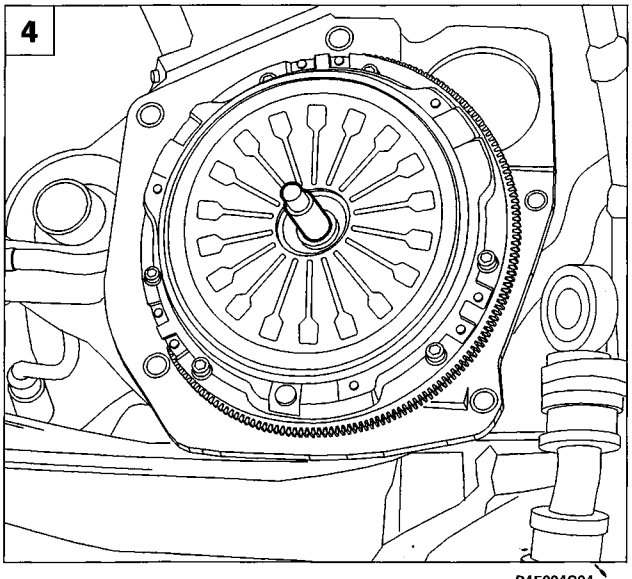

P4F004C04

REMOVING

NOTE *In order to remove the clutch it is necessary to remove the gearbox-differential unit as described in section 21 - 27.*

1. Undo the bolts fixing the clutch assembly to the engine flywheel, then remove the clutch assembly.

DRIVEN DISC - PRESSURE PLATE

2. If the driven disc linings are excessively worn, either they must be replaced or else the complete disc must be replaced.

   If there is wear, overheating or deep grooves on the pressure plate, replace the assembly.
3. Check that the driven disc is not more than 0.25 mm off centre.

REFITTING

4. Align the driven disc in order to refit the clutch assembly using the centering pin shown:

Engine type	Tool
1370	**1875086000**
1581	**1870447000**
1747	**1875086000**
1998	**1875086000**
1910 TD	*
2387 TD	**1870081000**

* Data not available at the time of printing

Supersoded

Copyright by Fiat Auto

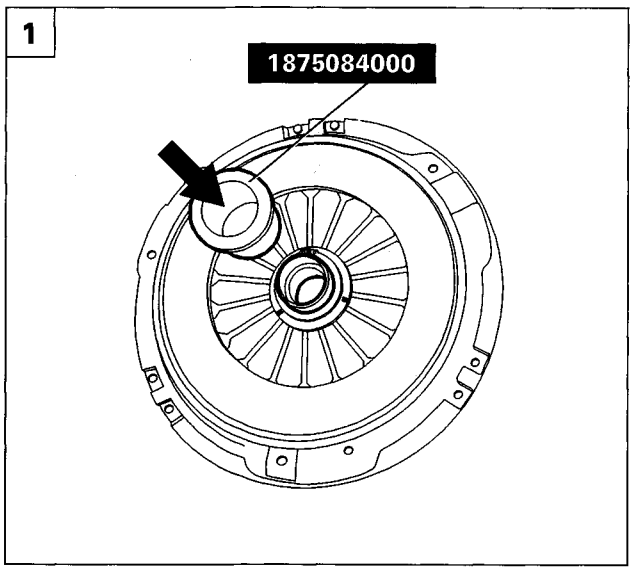

P4F006C01

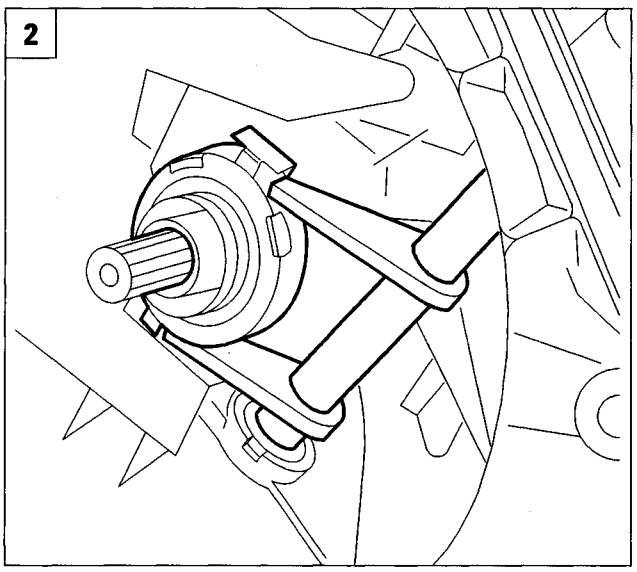

P4F006C02

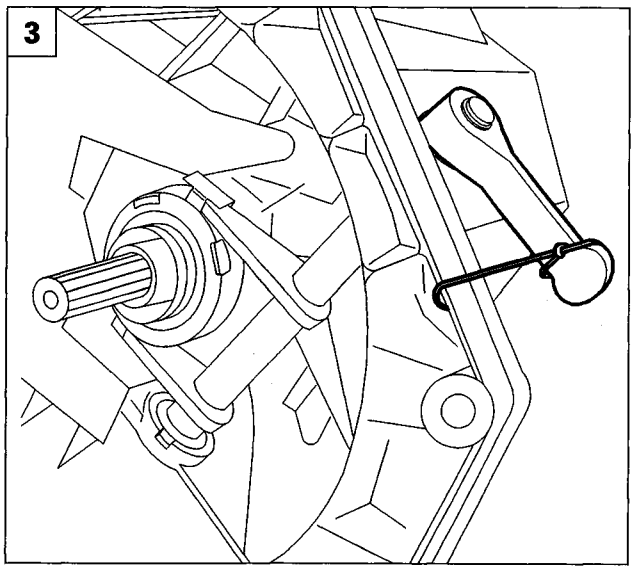

P4F006C03

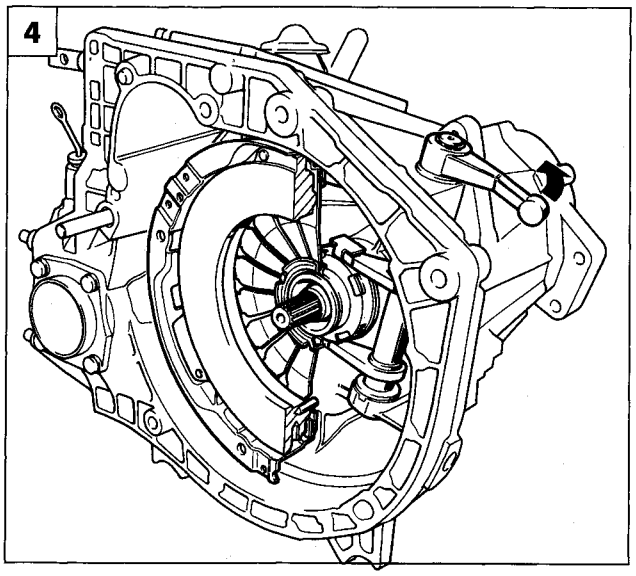

P4F006C04

THRUST BEARING

Removing

1. Using tool 1875084000, remove the thrust bearing from the clutch spring (only for 2387 TD version)

The bearing should not show signs of sticking or be noisy during rotation or else it must be replaced (for all engine types)

Refitting

2. Position the thrust bearing on the main gearbox shaft (for all engine types).

3. Fix the clutch release fork as illustrated in the diagram (for all engine types).

4. After having refitted the gearbox-differential unit, move the fork in the direction shown by the arrow to allow positioning thrust bearing in its seat (only for 2387 TD version).

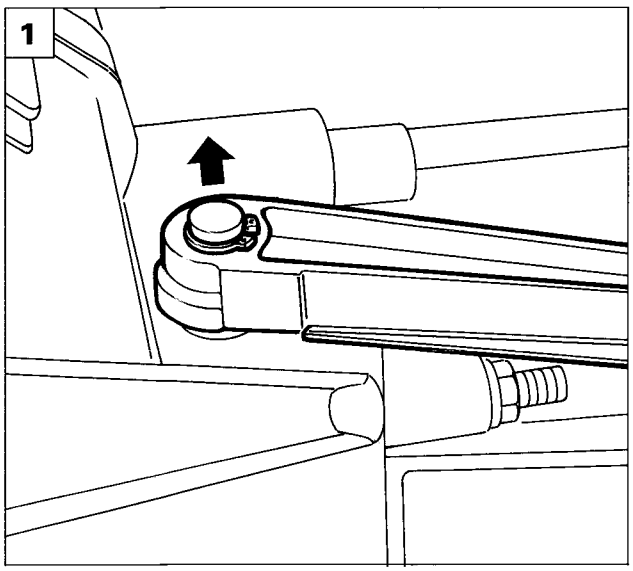

P4F007C01

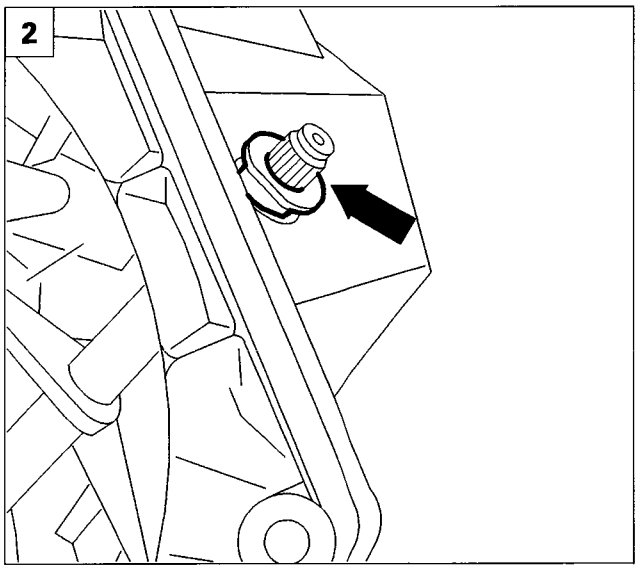

P4F007C02

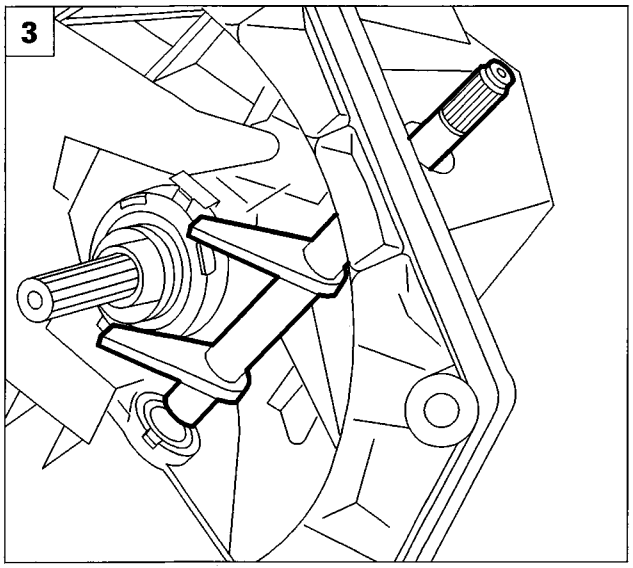

P4F007C03

FORK CONTROL SHAFT

Removing - refitting

1. Remove the circlip for the release lever and remove the actual lever.

2. Remove the upper bush.

NOTE *The bush in question should be replaced each time there is excessive clearance for the fork control shaft.*

3. Remove the fork control shaft, extracting it from the lower housing.

4. View of components removed

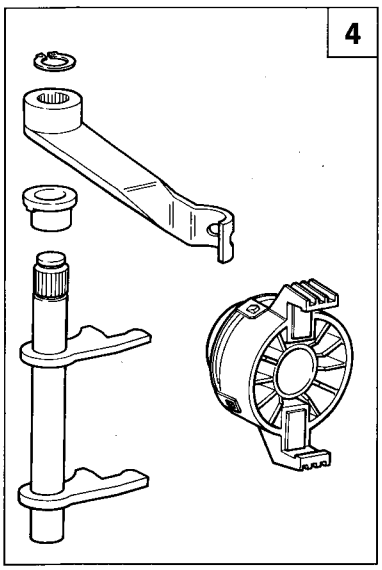

P4F007C04

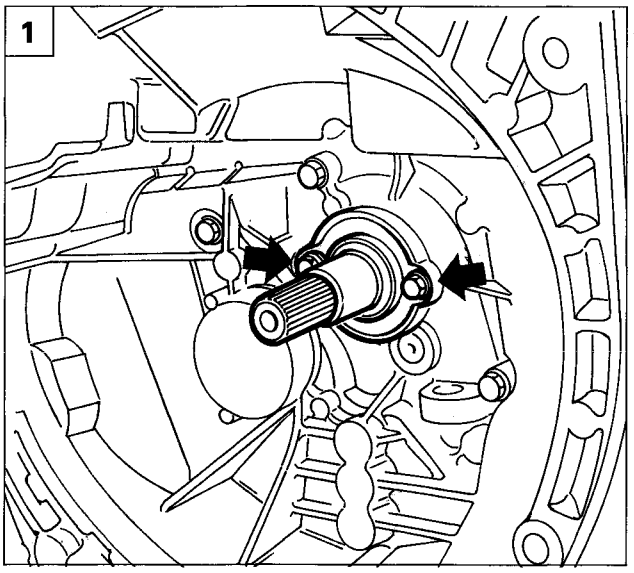

P4F008C01

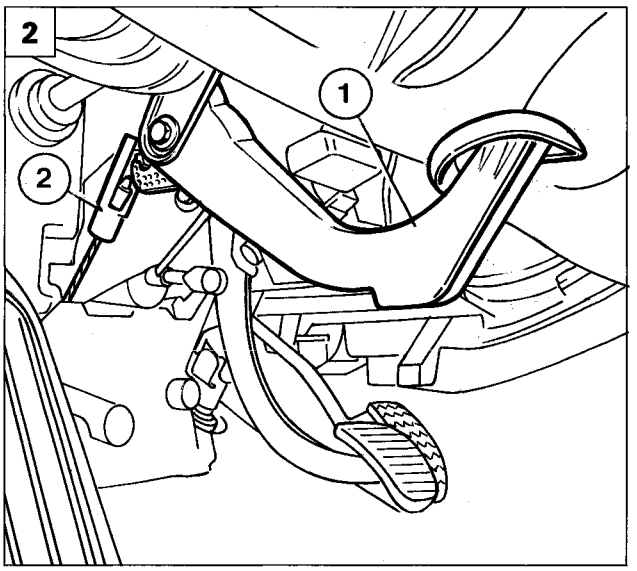

P4F008C02

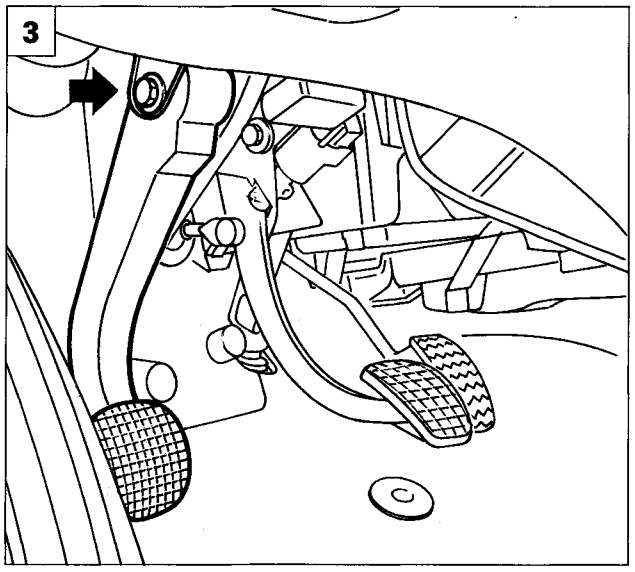

P4F008C04

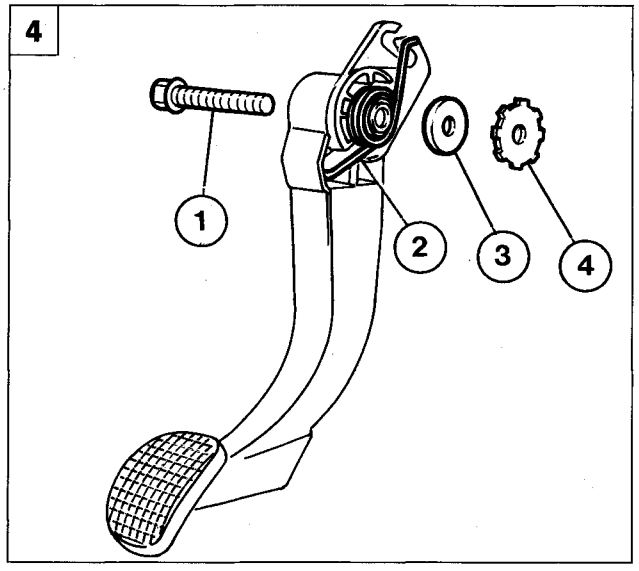

P4F008C03

THRUST BEARING SLEEVE

NOTE *The 1370 12v versions does not have a thrust bearing sleeve.*

Removing - refitting

1. Undo the bolts shown and remove the sleeve. (The illustration refers to the sleeve for the 1580 16v version).

NOTE *The seal should be replaced each time there are oil leaks from the gearbox. When refitting, smear silicon sealant on the contact surfaces which will act as a seal.*

CLUTCH PEDAL

Removing peal on version with mechanical clutch

2. Lift up the clutch pedal (1), then disconnect the end (2) of the clutch cable from the pedal.
3. Undo the bolt fixing the clutch pedal and remove it from its housing; then remove the pedal and the supporting spring.

the parts concerned before fitting

4. When refitting, place the spring (2) on the clutch pedal and position the washer (3) and the spring (2) retaining device (4). Insert the clutch pedal fixing bolt (1) and lock it using the nut.

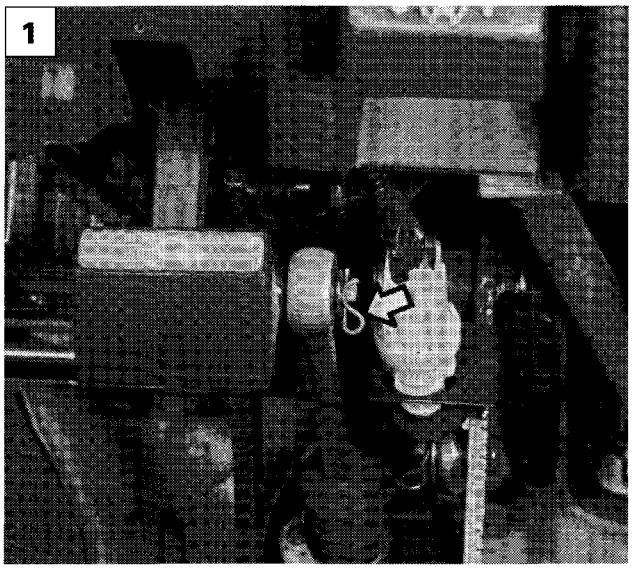

P4F009C01

Removing pedal on version with hydraulic clutch

1. Remove the clip fixing the clutch pump to the pedal.

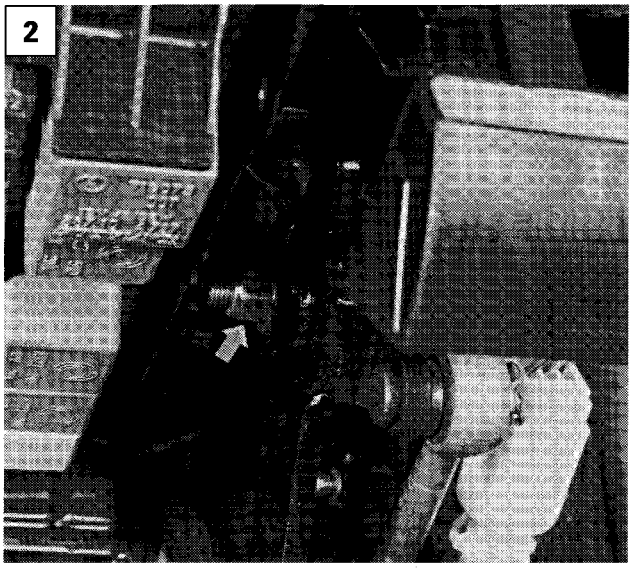

P4F009C02

2. Remove the clutch pedal acting at the point shown by the arrow.

For the 1998 20v version, do not lubricate the rubber bush (Silent-block) connecting the pump - pedal unless the material has deteriorated.

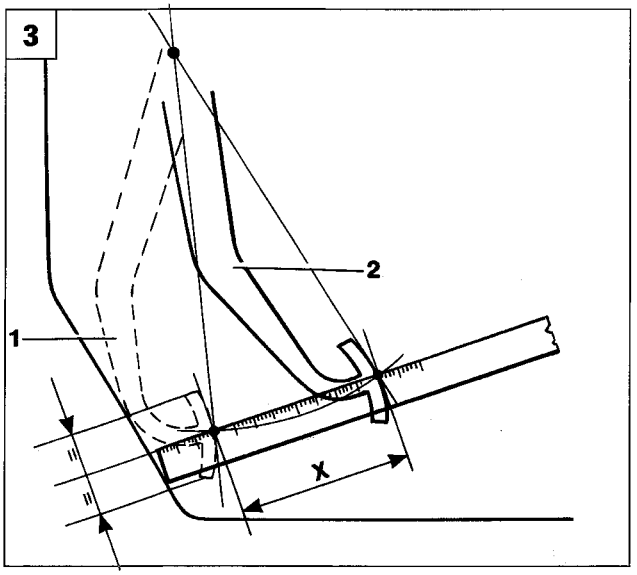

P4F009C03

CLUTCH PEDAL POSITION ADJUSTMENT (for vehicles with mechanical release device)

3. Measure the clutch pedal travel:

   1. Pedal in end of travel position
   2. Pedal in rest position
   X. Pedal travel:
   (See table on page 1)

Carefully measure the pedal travel for the correct clutch release.

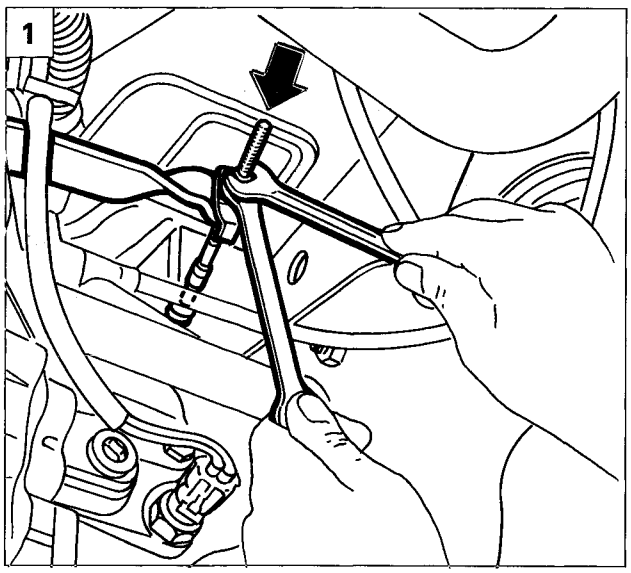

P4F010C01

1. In order to adjust the clutch pedal in the rest position it is necessary to:
   let the clutch bed in by fully depressing the pedal at least 5 times.

   Check that the travel "X" is within the values given above. The travel is measured using a rule by the centre line of the pedal and corresponds to the distance between the pedal in the end of travel position (pedal in contact with the partition) and in the rest position.
   Any adjustment of the travel is carried out by acting on the nut and, where fitted, the lock nut for the clutch cable, gearbox side.

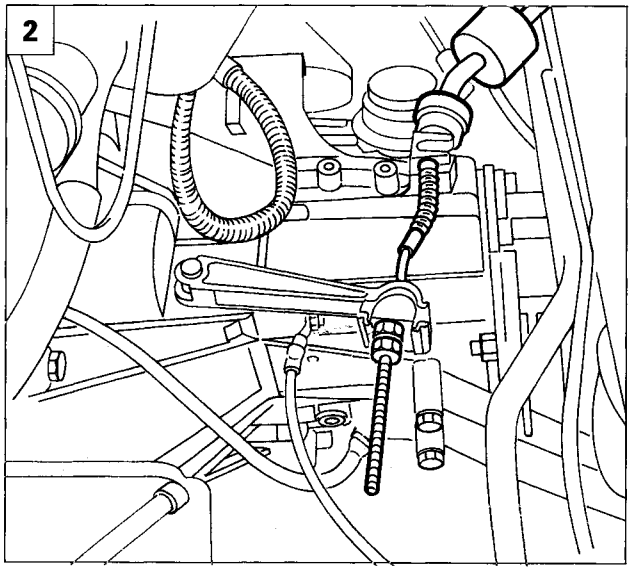

P4F010C02

REMOVING-REFITTING CLUTCH CABLE

In order to be able to release the clutch cable it is necessary to remove the:

- Air duct
- Battery
- Relay holder box
- Battery drip tray
- I.E. control unit for the 1580 16v version

2. Remove the nut and, where fitted, the lock nut, which fix the clutch cable to the control lever and release the cable from the anchorage on the gearbox-differential.

The diagram shows the clutch cable fitted on the 1370 version.

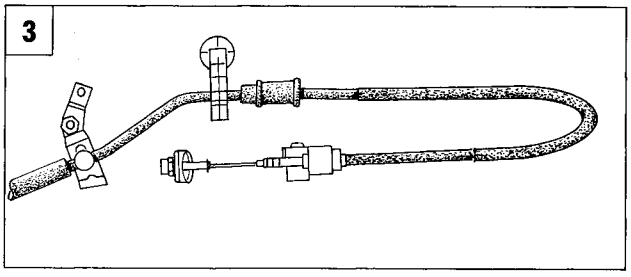

P4F010C03

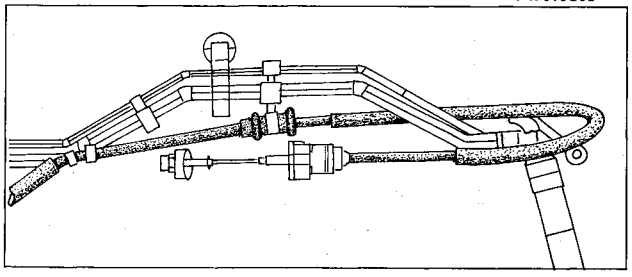

P4F010C04

3. Release the clutch cable from the anchorages (1) on the bodyshell as illustrated in the diagram (only for 1581 - 1747 - 1910 TD versions).

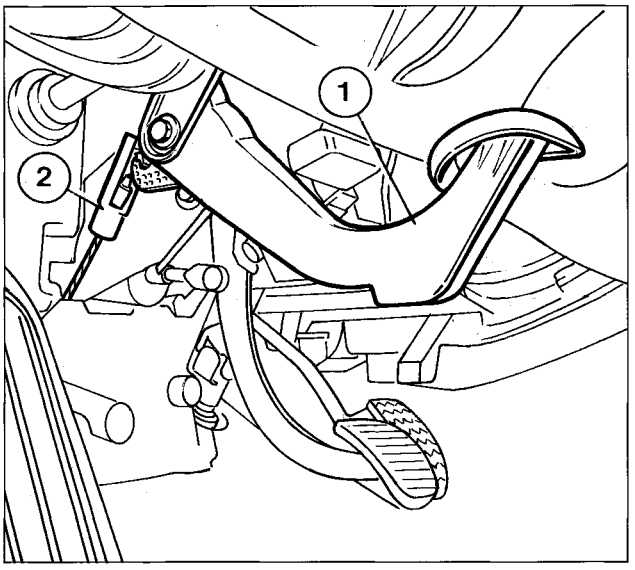

P4F011C01

1. Raise the clutch pedal and disconnect the end (2) of the clutch cable from the pedal (3).

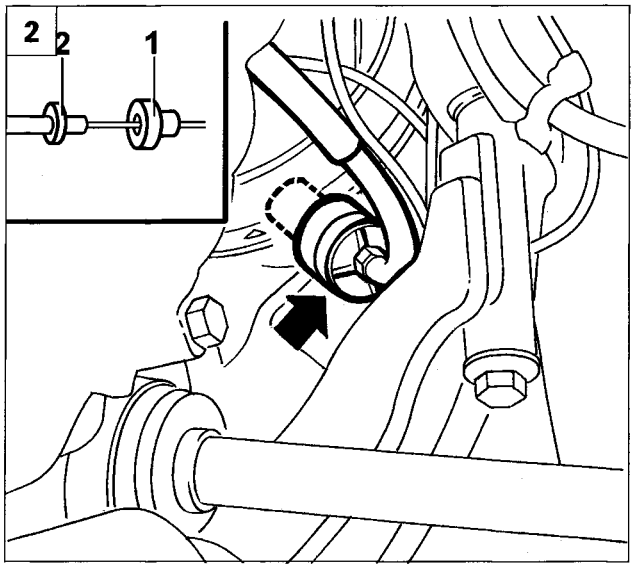

P4F011C02

2. From inside the engine compartment, remove the flexible buffer from the anchorage opening in the partition and extract the complete clutch cable.

When refitting the clutch cable the flexible rubber buffer (1) must be positioned on the partitionand then the rigid buffer (2) inserted into the opening in the flexible buffer. When the operation is completed, check and adjust the clutch pedal travel as described previously. Take care for the 1581-1747 -1910 TD versions when refitting the cable on the anchorages on the bodyshell making sure that the actual cable has not deteriorated.

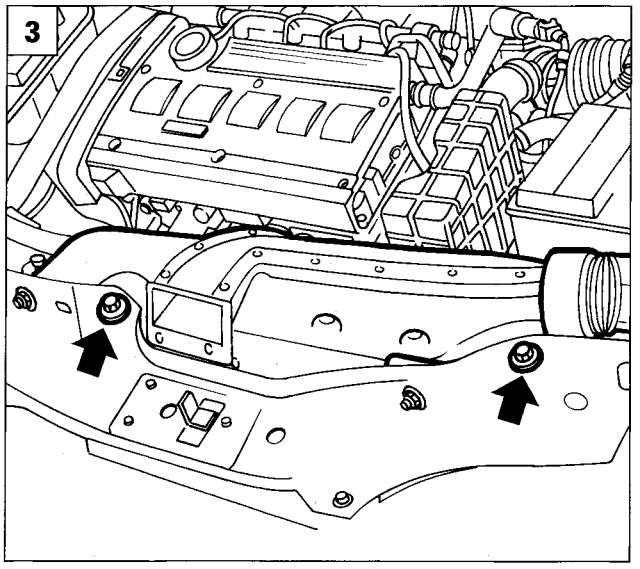

P4F011C03

REMOVING REFITTING HYDRAULICALLY OPERATED CLUTCH COMPONENTS

CLUTCH PUMP

1998 20v version

3. Remove the air intake duct actingon the bolts shown in the diagram.
   Disconnect the battery leads from the poles and remove the battery from the engine compartment undoing the nut fixing the retaining bracket.

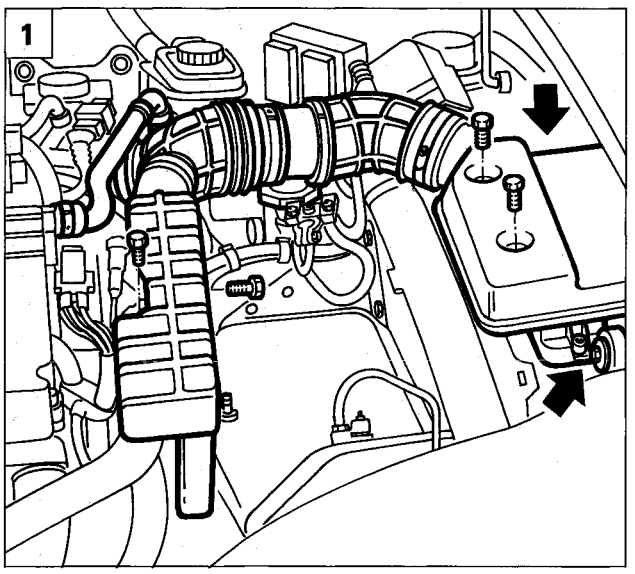

P4F012C01

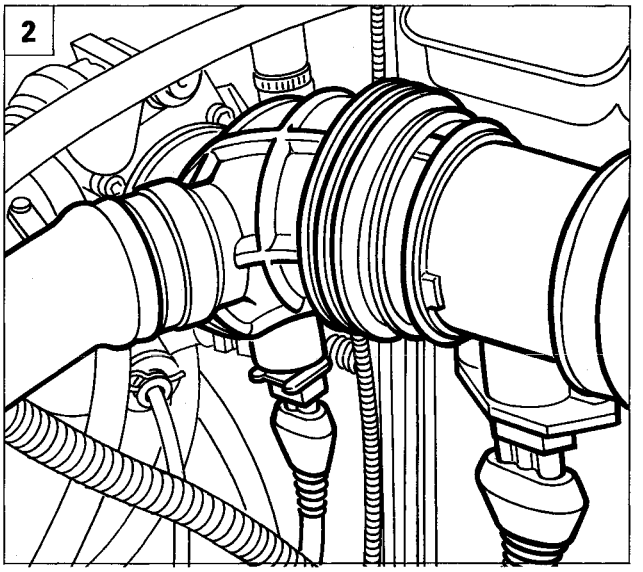

P4F012C02

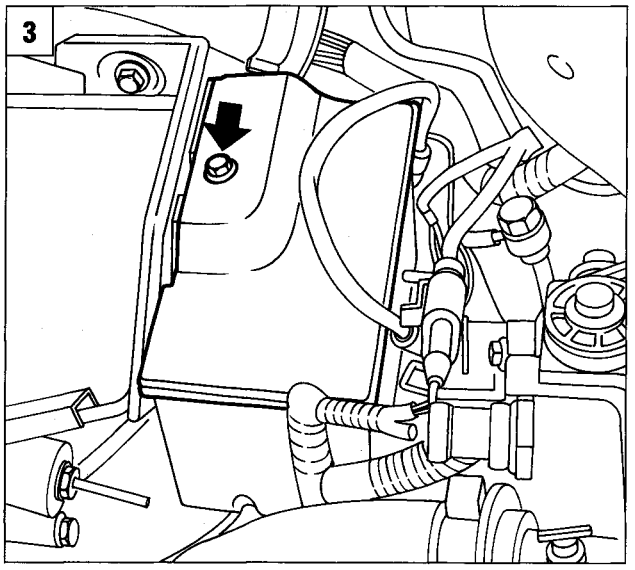

P4F012C03

1.2. Disconnect the pipe connecting the air filter to the butterfly casing acting as illustrated in the diagram also removing the resonator.

3. Remove the relay casing cover.

4. Remove the nuts fixing the relay casing to the battery drip tray, then place it at the side.

5. Remove the bolts (1) and loosen the bolt (2) fixing the battery drip tray to the bodyshell. Before removing the battery drip tray, disconnect the cable retaining band underneath.

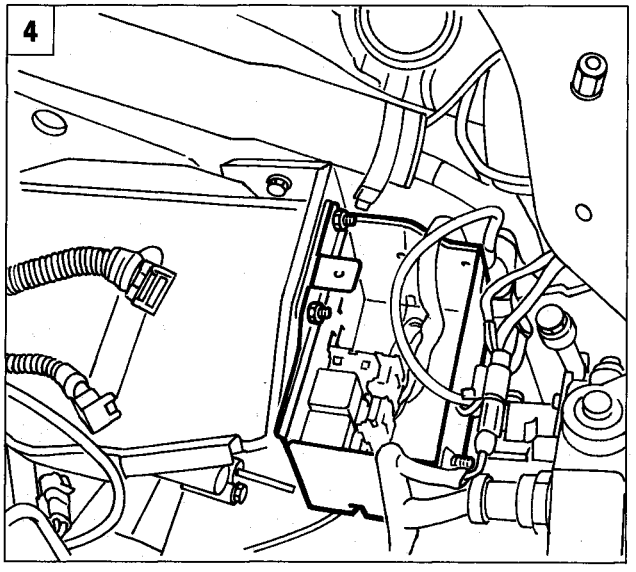

P4F012C04

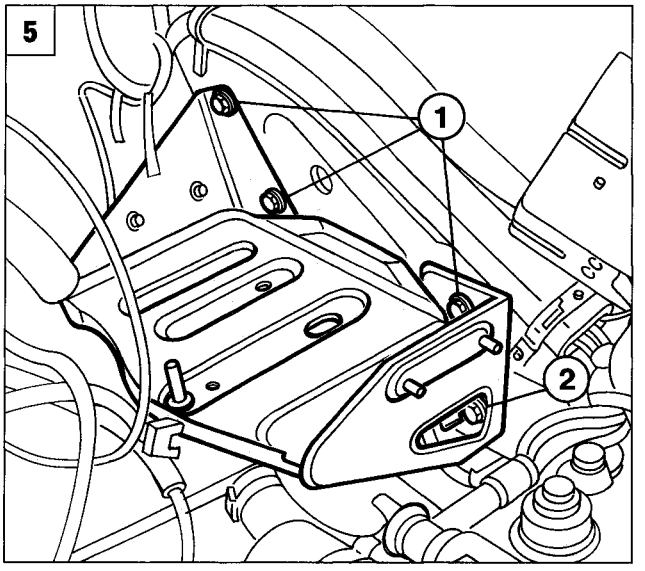

P4F012C05

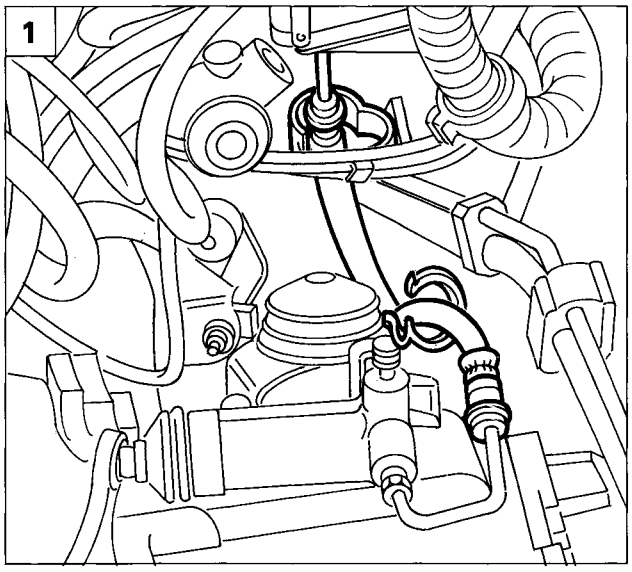

P4F013C01

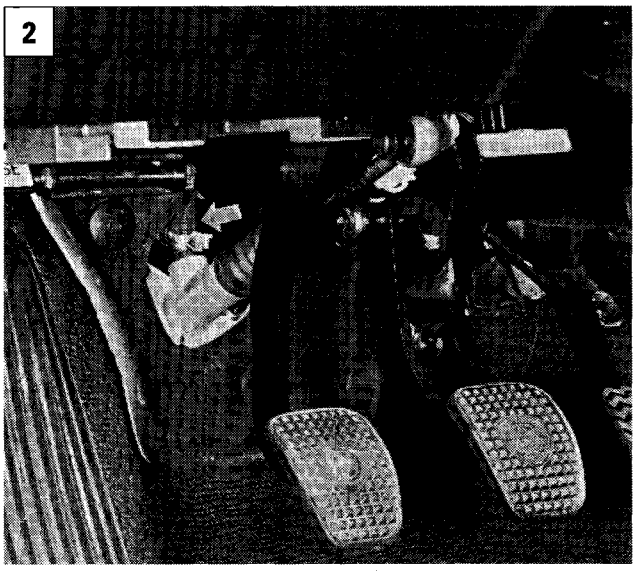

P4F013C02

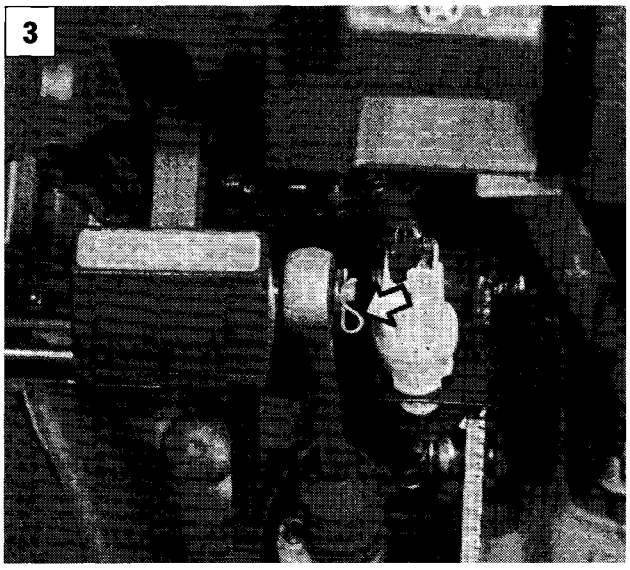

P4F009C01

1. Release the connecting pipe for the operating cylinder from the retaining bands.

2. Disconnect the pipe for the hydraulic system from the clutch pump.

   The hydraulic system must be drained before disconnecting the pipe.

3. Remove the clip fixing the clutch pump to the pedal.

4. Undo the nuts fixing the clutch pump to the bodyshell.

5. Disconnect the brake fluid supply connector to the clutch pump, then remove the actual pump.

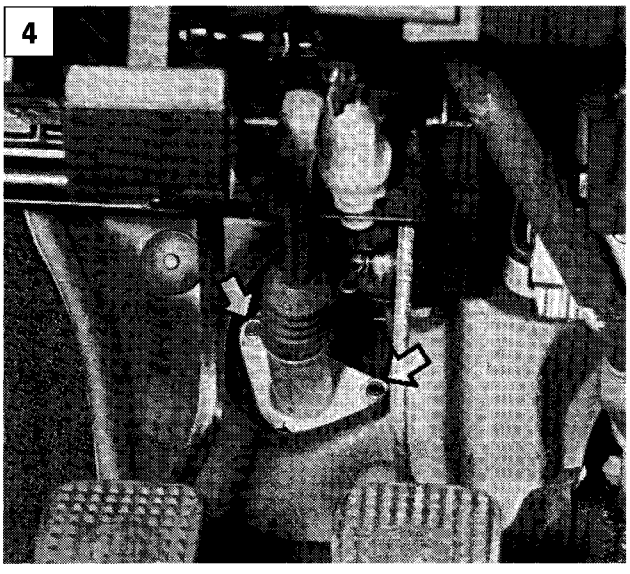

P4F013C03

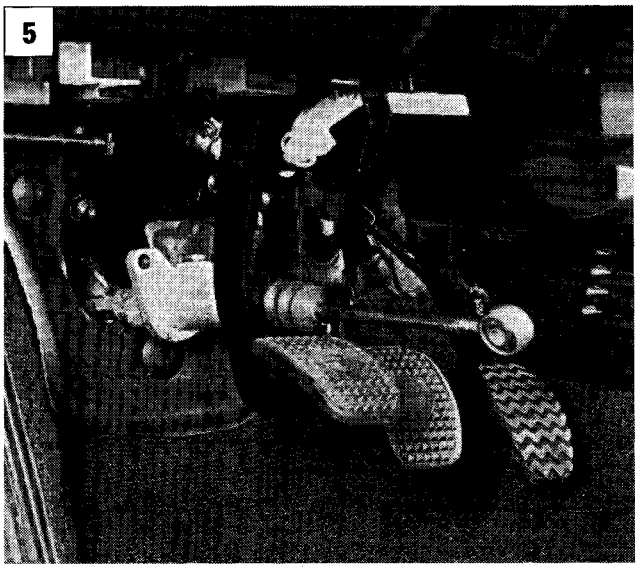

P4F013C04

Copyright by Fiat Auto

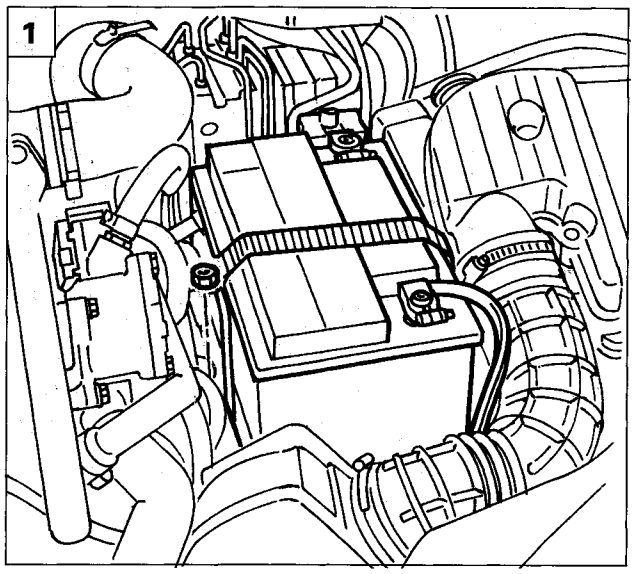

P4F014C01

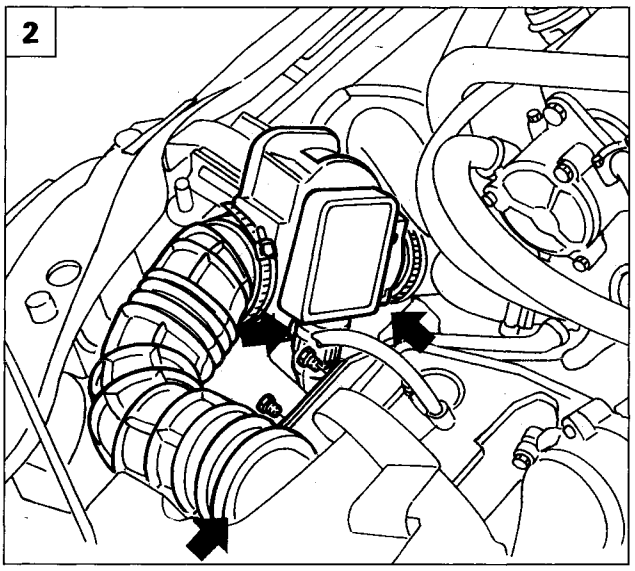

P4F014C02

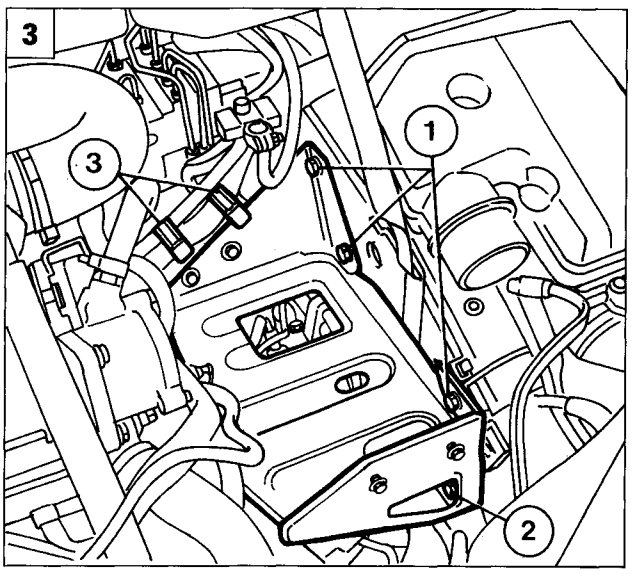

P4F014C03

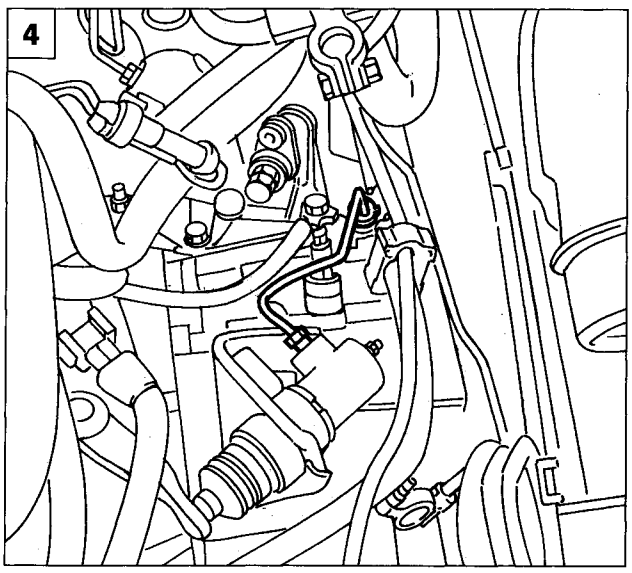

P4F014C04

2387 TD version

Release the clutch pump from inside the vehicle, working as illustrated previouslyfor the 1998 20v version.

1. Working via the engine compartment, disconnect the positive pole and the negative pole of the battery, undo the nut fixing the bracket and remove the battery from the engine compartment.

2. Loosen the bands shown, loosen the fixing bolts shown, disconnect the electrical connection illustrated, then remove the air inlet hose complete with flow meter.

3. Undo the bolts (1), loosen the bolt (2), open the bands (3) releasing the wiring, then remove the battery drip tray.

4. Release the connecting pipe for the operating cylinder from the point shown, then remove the clutch pump from the inside of the vehicle.

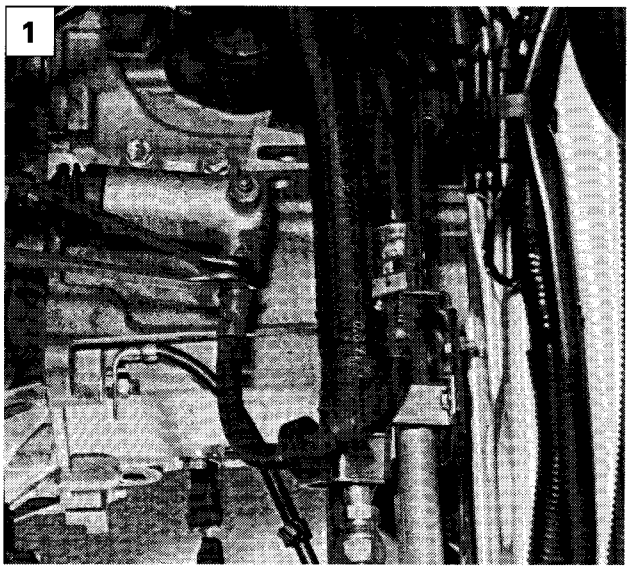

P4F015C01

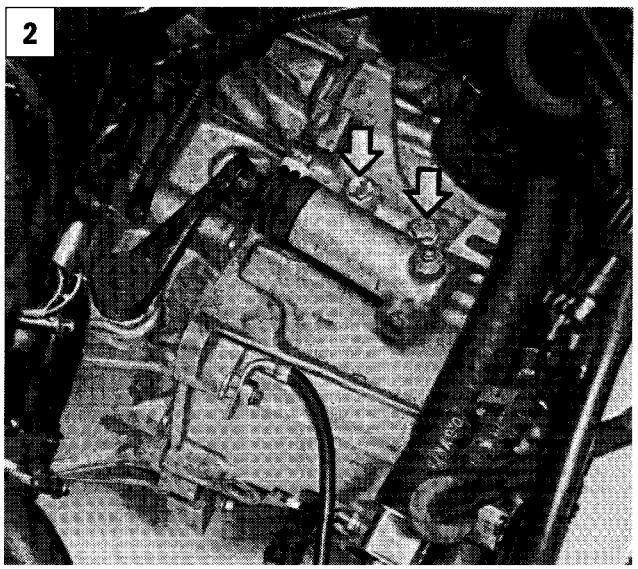

P4F015C02

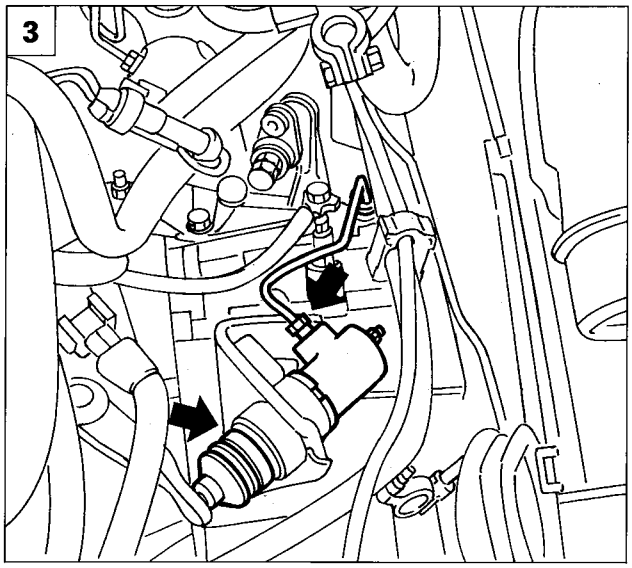

P4F015C03

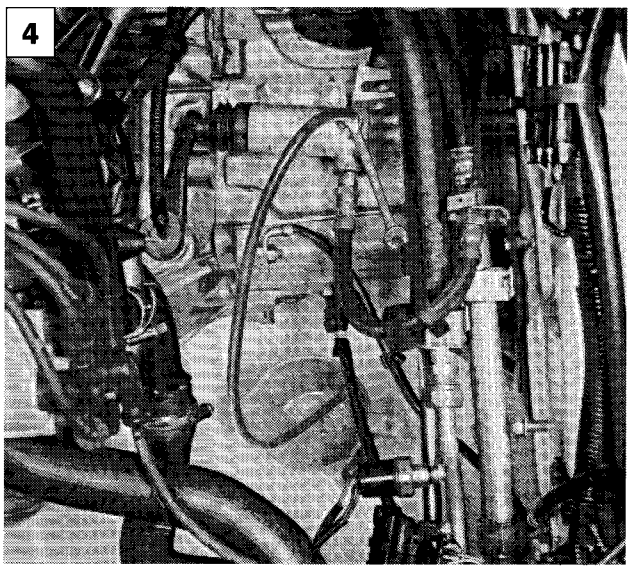

P4F015C04

OPERATING CYLINDER

Carry out the preliminary operations in the engine compartment working as described in the previous paragraph.

1998 20v version

1. Disconnect the flexible pipe from the operating cylinder.
2. Undo the nuts shown and remove the clutch operating cylinder

2387 TD version

3. Disconnect the flexible pipe shown and release the operating cylinder from the mounting bracket, then remove it.

BLEEDING 1998 20V - 2387 TD

4. Do not, under any circumstances, reuse the fluid recovered. Top up with new brake fluid.

Copyright by Fiat Auto

page

1370 12v

REMOVING-REFITTING 1

DRIVE SHAFTS

- Removing-refitting 9
- Dismantling 10
- Refitting 12
- Drive transmission components 13

GEAR SELECTOR LINKAGE

- Diagram of gear selector linkage 14
- Removing-refitting 15
- Dismantling at the bench 18
- Removing-refitting gear change lever on car 19

1580 16v

REMOVING-REFITTING 20

DRIVE SHAFTS

- Removing-refitting drive shafts 28
- Dismantling 28
- Refitting 28

GEAR SELECTOR LINKAGE

- Diagram of gear selector linkage 29
- Removing-refitting 30
- Dismantling at the bench 33

1747 16 v

REMOVING-REFITTING 34

DRIVE SHAFTS

- Removing-refitting drive shafts 42
- Dismantling 43
- Refitting 44

INTERMEDIATE SHAFT - GEAR SELECTOR LINKAGE

- Removing-refitting 46
- Gear selector linkage 46

page

1998 20v

REMOVING-REFITTING 47

DRIVE SHAFTS - GEAR SELECTOR LINKAGE

- Removing-refitting and dismantling drive shafts 58
- Removing-refitting intermediate shaft 58
- Removing-refitting gear selector linkage 58

2387 TD

REMOVING - REFITTING

- Tool to be made 59
- Removing - refitting 60

DRIVE SHAFTS

- Removing - refitting and dismantling drive shafts 70

GEAR SELECTOR LINKAGE

- Removing - refitting 71
- Dismantling at the bench 75
- Diagram of gear selector linkage 79

1910 TD

REMOVING - REFITTING 80

DRIVE SHAFTS

- Removing - refitting and dismantling drive shafts 90

GEAR SELECTOR LINKAGE

- Removing - refitting 91
- Dismantling at the bench 95
- Diagram of gear selector linkage 96

Copyright Fiat Auto

COPYRIGHT Fiat Auto S.p.A.

Total or partial reproduction of the text or illustrations is forbidden.

The information in this publication is intended as a guide and could be superseded as a result of modifications adopted by the Manufacturer at any time due to technical and commercial reasons and in accordance with local regulations.

Fiat Auto S.p.A.

D.M.C. - M.P.S.
Servizi Post Vendita - Assistenza Tecnica
10040 Volvera TO - (Italia) - Largo Senators G. Agnelli, 5
Print no. 506.763/02 – Agosto 1996 - 750
Printed in Italy - Tip. Pozzo Gros Monti - Moncalieri (TO)
N. ordinazione 60444763

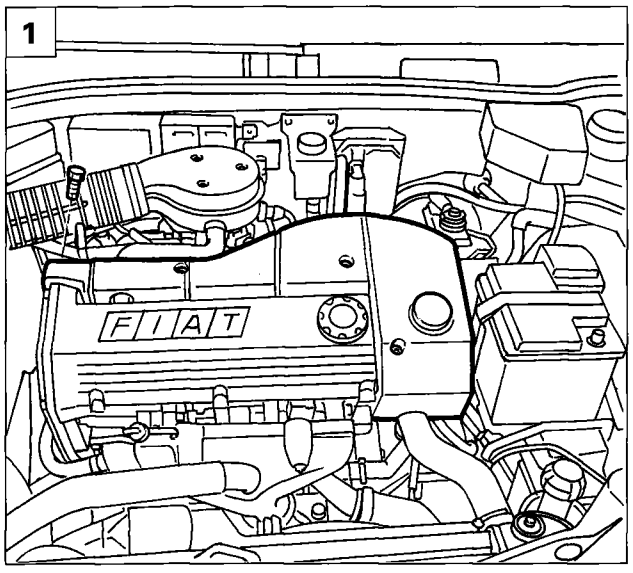

P4F001B01

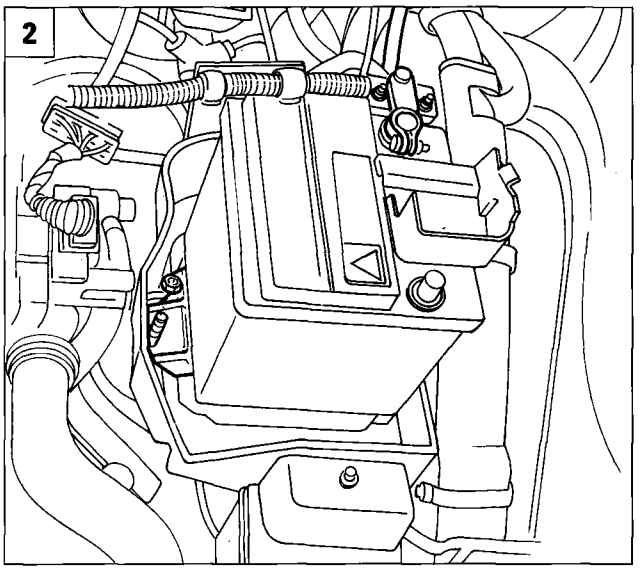

P4F001B02

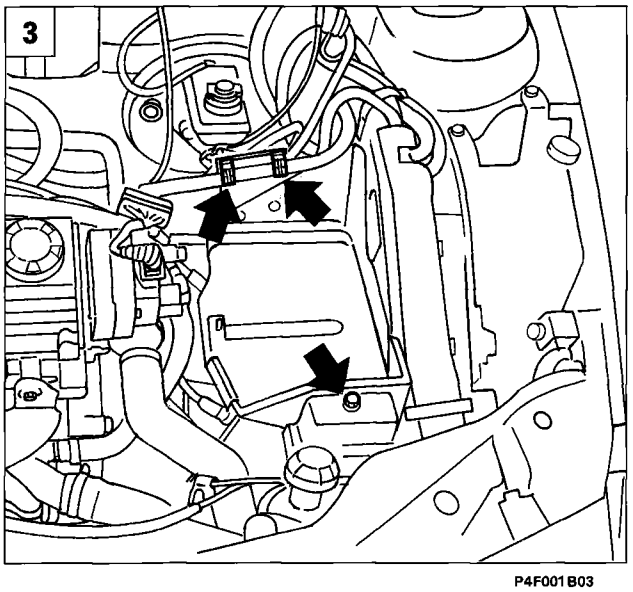

P4F001B03

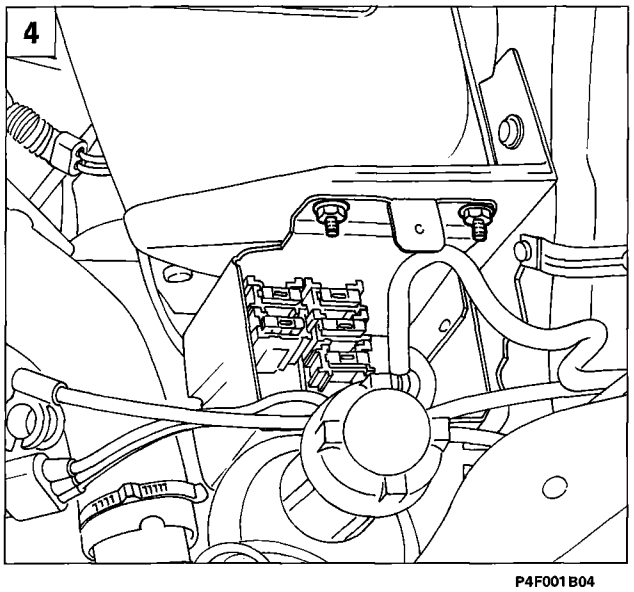

P4F001B04

REMOVING - REFITTING

Removing

Place the car on ramps, remove the front wheels, then proceed as follows:

1. Undo the bolts illustrated, then remove the plastic engine guard.
2. Disconnect the battery's negative pole, lift the positive pole's protective cover and disconnect the pole; undo the nut securing the battery bracket to the battery cage and remove the battery from the engine compartment.
3. Release the cables shown in the figure from the retaining clips, then undo the bolt securing the relay box cover.
4. Remove the nuts securing the relay box to the battery cage, then move the box over to one side.

Copyright Fiat Auto

21-27.

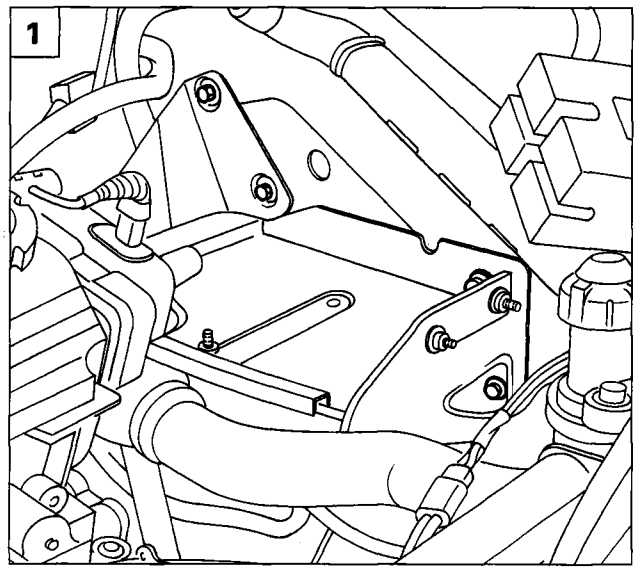

P4F002B01

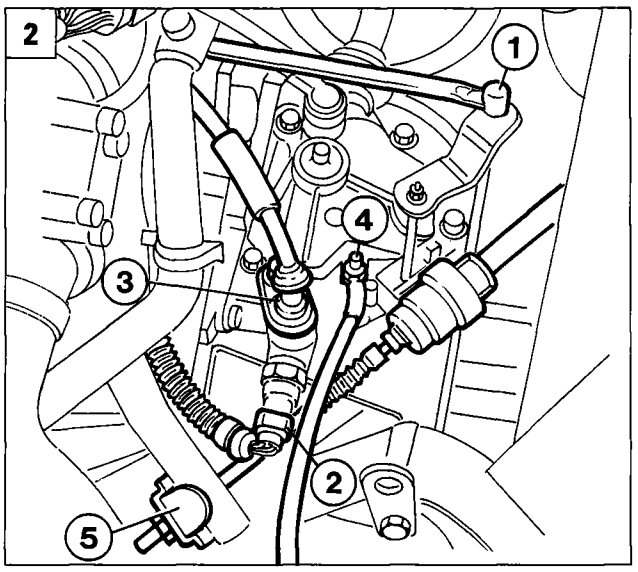

P4F002B02

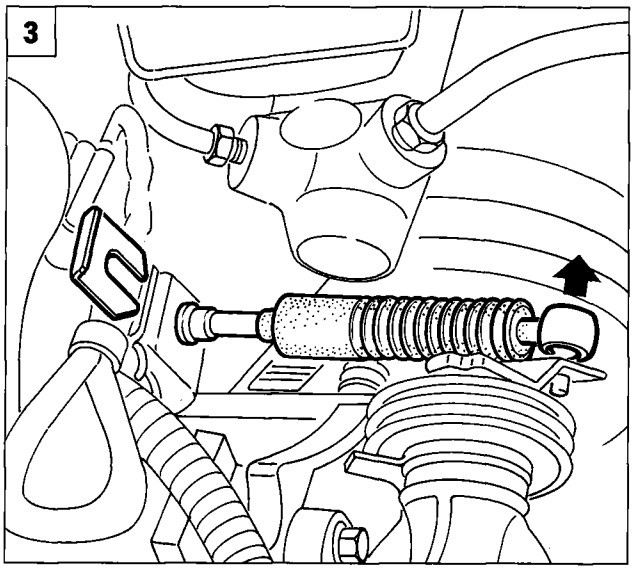

P4F002B03

1. Undo the bolts shown in the figure and remove the battery cage from the engine bay.
2. Disconnect the gear selector lever (1), disconnect the reversing lights switch (2), inhibiting cable (3), earth cable (4) and clutch cable (5).
3. Disconnect the head of the gear engagement cable, remove the stop indicated, disconnect the speedometer connection then move the assembly to one side in the engine compartment.
4. Remove the front bolts securing the starter motor to the gearbox.
5. Raise the ramps, undo the nut securing the tie rod balljoint head, then using tool 1847038000, disconnect it from the vertical link. Repeat the operation for the tie rod ball joint head on the other side.

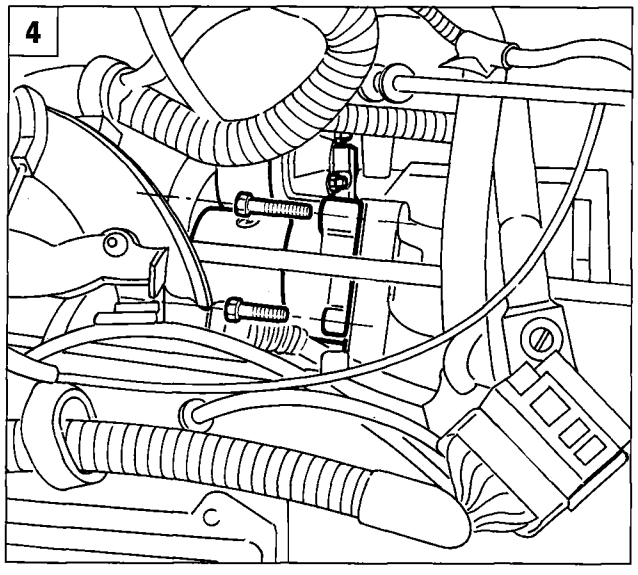

P4F002B04

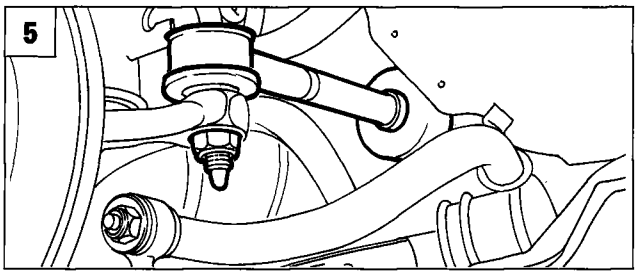

P4F002B05

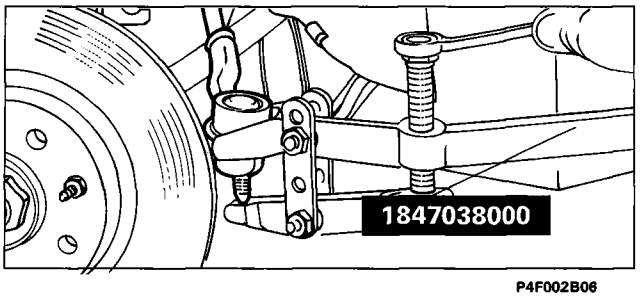

P4F002B06

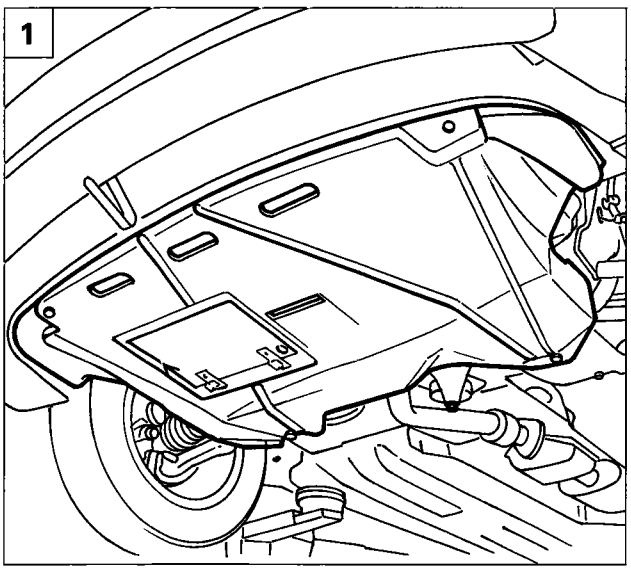

P4F003B01

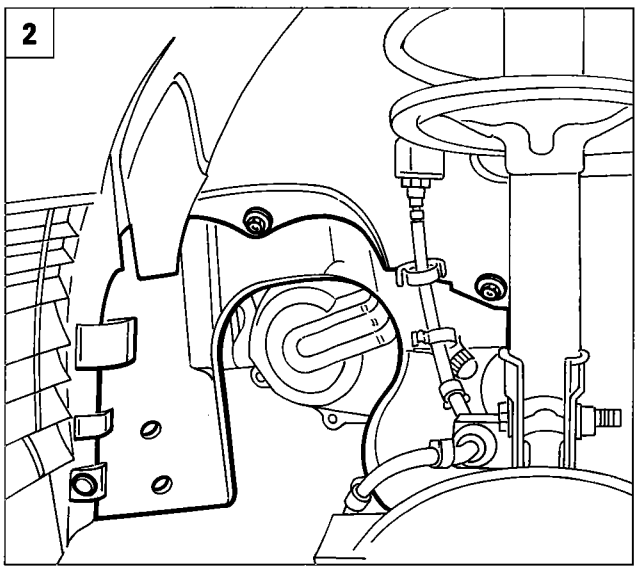

P4F003B02

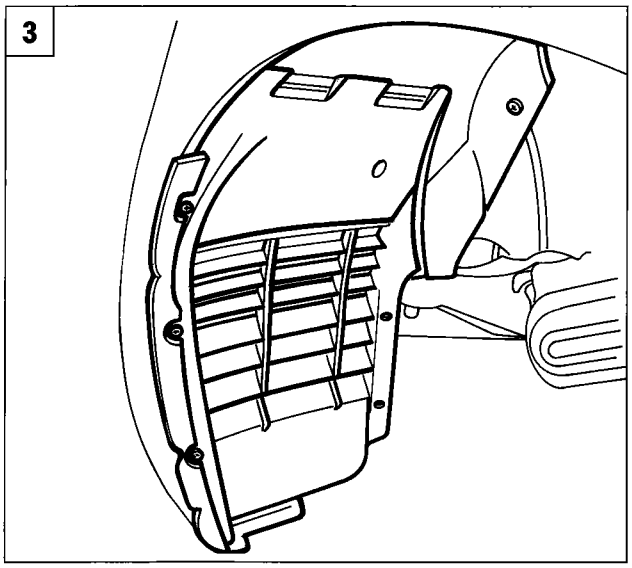

P4F003B03

1. Undo the attachments illustrated, then remove the engine bay bottom guard.
2. Using tool 1878077000, remove the button securing the dust shield to the body shell, then undo the bolts and release the shield from its seating. Repeat the operation on the dust shield on the other side.
3. Remove the front dust shield by undoing the attachments illustrated.
4. Prepare a tray to collect the gearbox oil, then undo the plug indicated and drain the gearbox oil.
5. Remove the shock absorber - vertical link bolts and turn the vertical link inwards, releasing the brake pipe from the shock absorber.

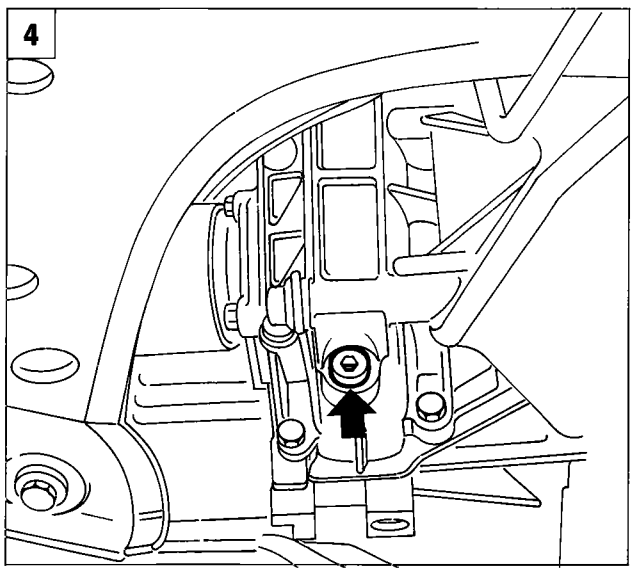

P4F003B04

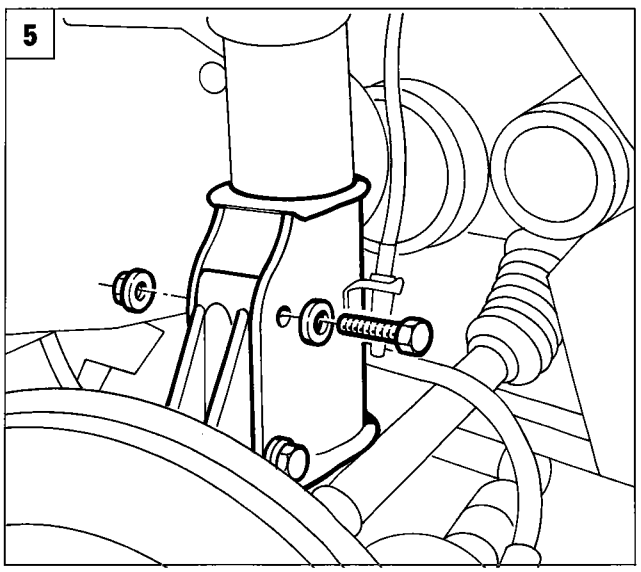

P4F003B05

Copyright Fiat Auto

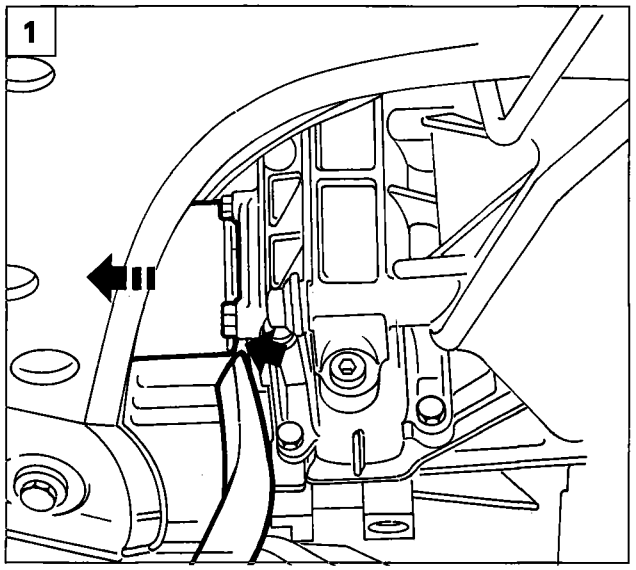

P4F004B01

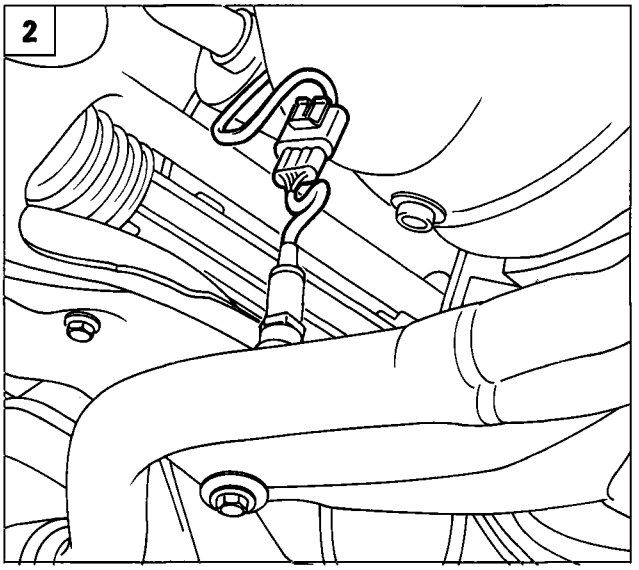

P4F004B02

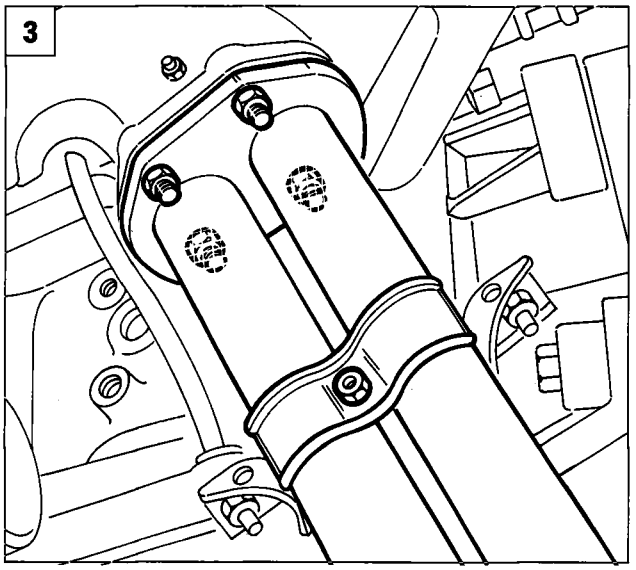

P4F004B03

1. Disconnect the drive shaft, gearbox side, from the differential, levering on the engagement point, and move it away from the working area.
2. Disconnect the Lambda probe wiring connector.
3. Remove the nuts securing the first section of the exhaust pipe to the manifold.
4. Remove the rear attachments and remove the first section of the exhaust pipe from the car.
5. Disconnect the drive shaft, intermediate shaft side, from the differential, levering on the engagement point.

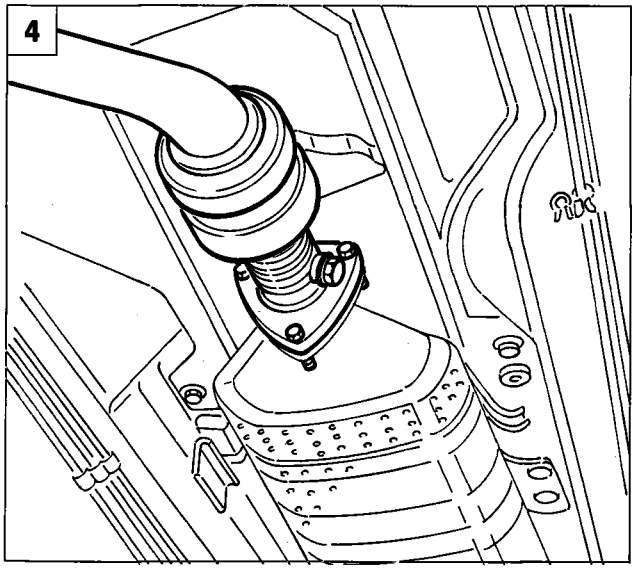

P4F004B04

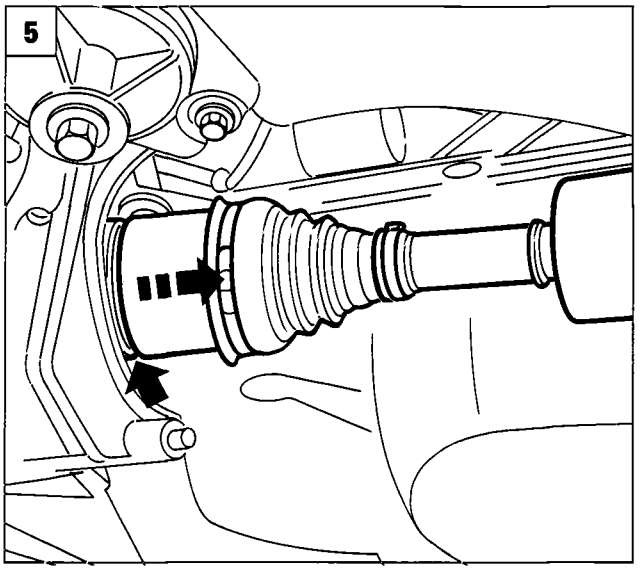

P4F004B05

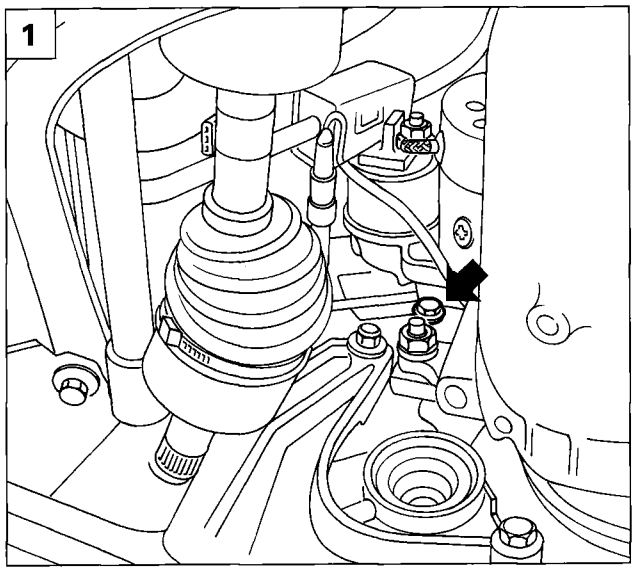

P4F005B01

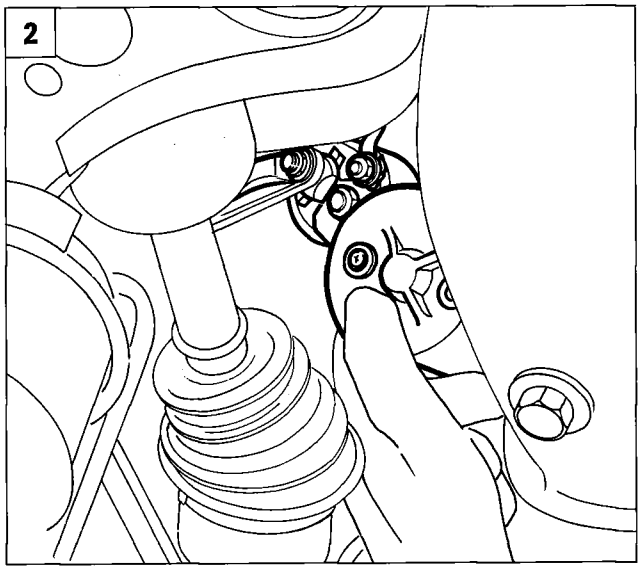

P4F005B02

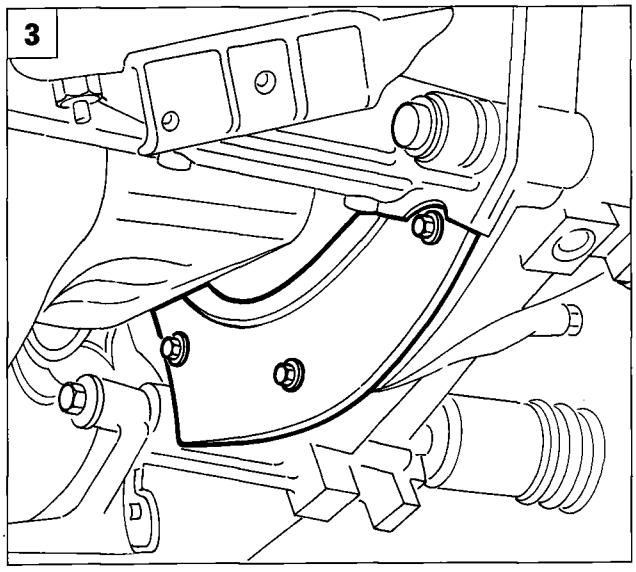

P4F005B03

1. Undo the bottom bolt securing the starter motor.
2. Disconnect the starter motor cables and remove the starter motor.
3. Remove the flywheel guard by undoing the attachments illustrated.
4. Remove the mounting bracket from the first section of the exhaust pipe, in order to be able to insert a wrench and remove the bolt securing the gearbox to the engine.
5. Lower the ramp and remove the wind-screen wiper arms.

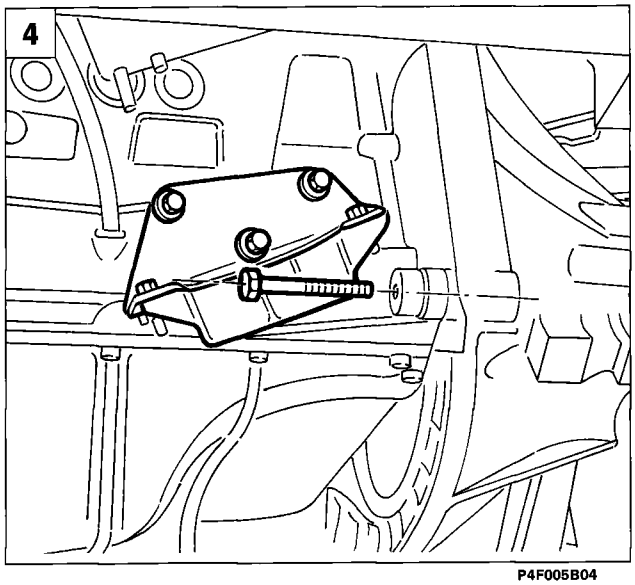

P4F005B04

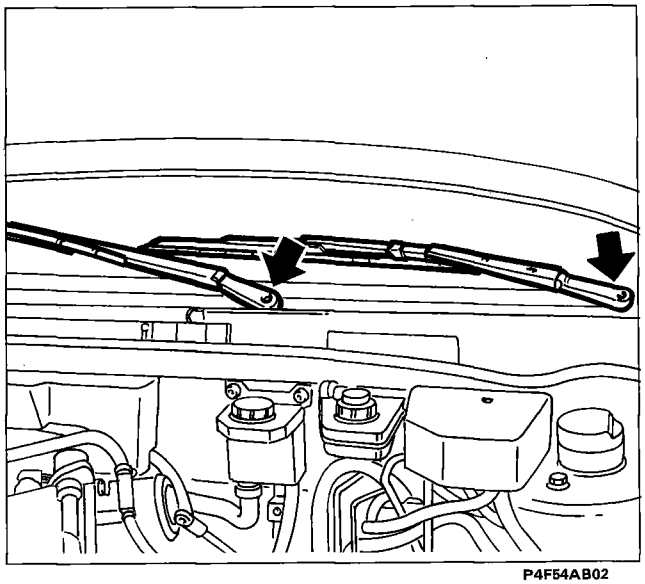

P4F54AB02

21-27.

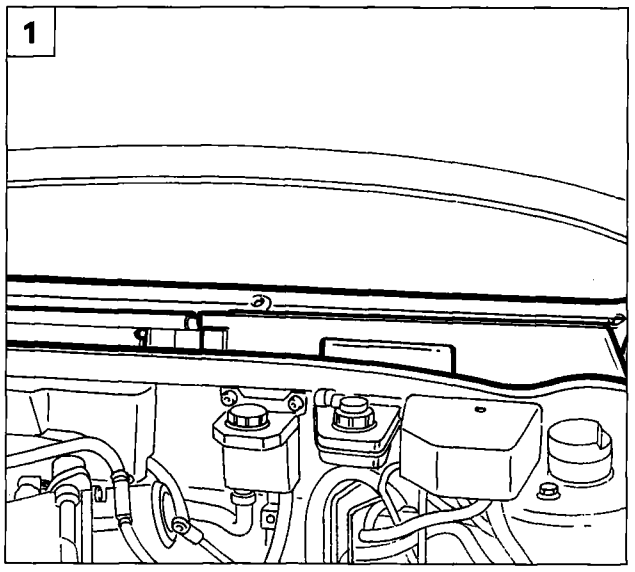

P4F54AB03

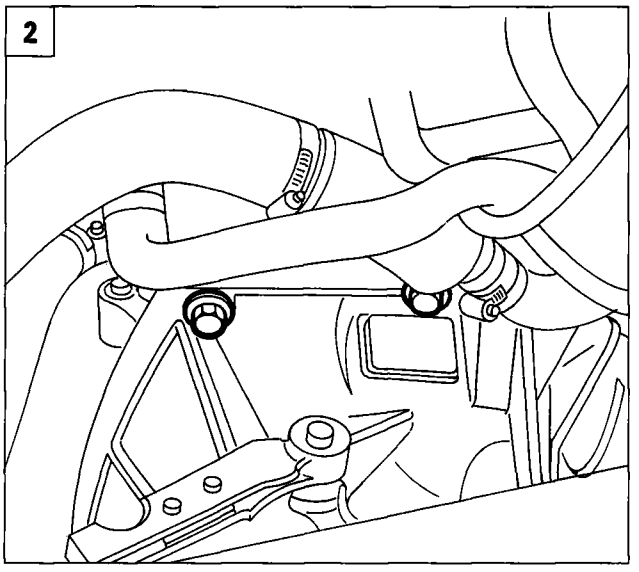

P4F006B01

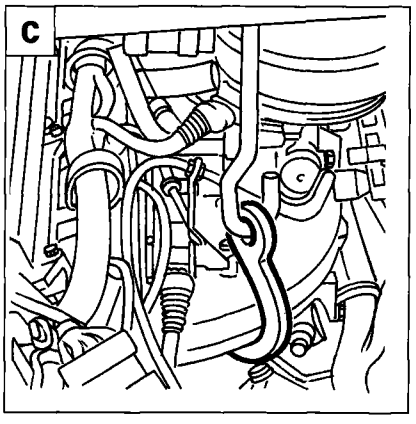

P4F006B02

1. Remove the plastic anti-pollen filter, by undoing the bolts illustrated.
2. Undo the top bolts securing the gearbox to the engine.
3. Fit the engine support crossbeam 1860851000 in the points of support illustrated.

a. Front support: fit the tool in the safety catch seating so that it rests on the front subframe.

b. Rear support: fit the tool level with the central reinforcement of the flame-proof bulkhead.

c. Secure the hook of the crossbeam to the inlet manifold so that it supports the power unit centrally.

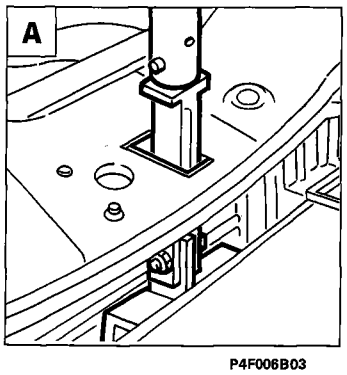

P4F006B03

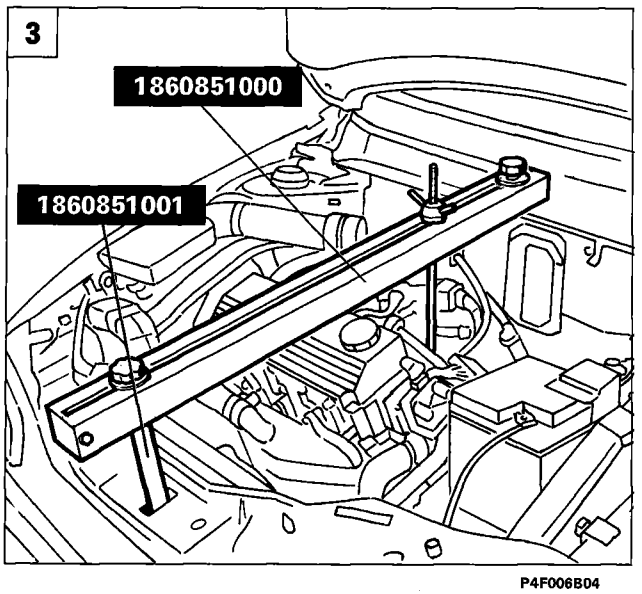

P4F006B04

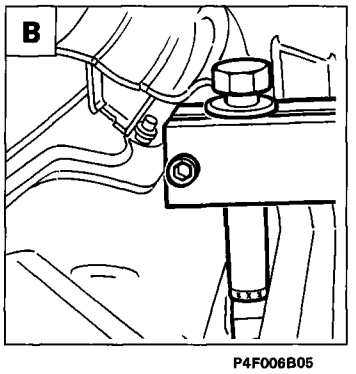

P4F006B05

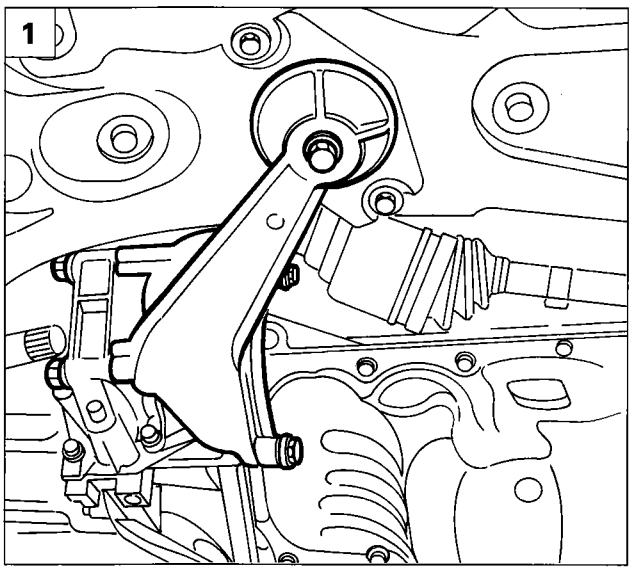

P4F007B01

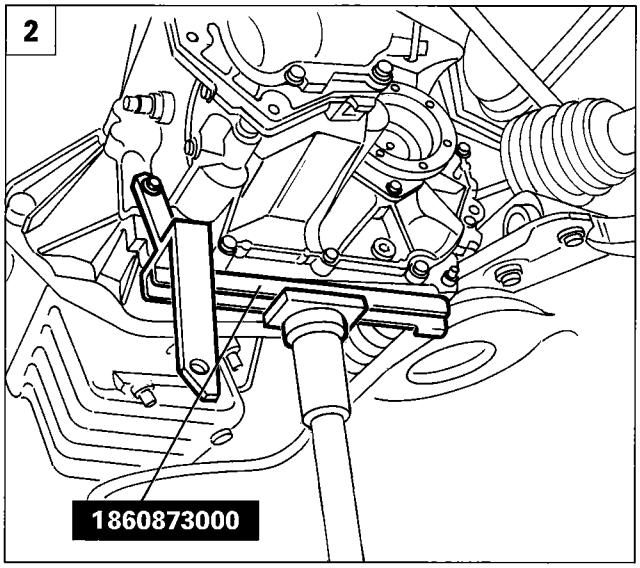

P4F007B02

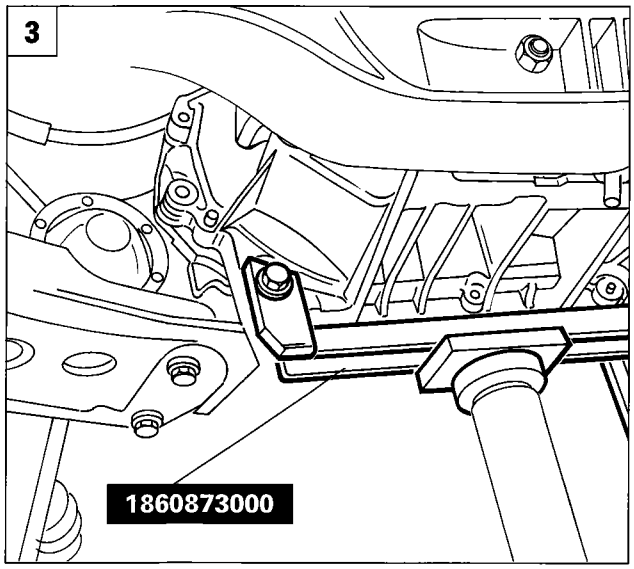

P4F007B03

1. Raise the car and remove the central power unit mounting from the body shell and the gearbox.

2.3 Fit the gearbox support tool (illustrated) during the removal operation.

4. Undo the remaining bolts securing the gearbox to the engine.

5. Remove the front power unit mounting, gearbox side, from the body shell and gearbox.

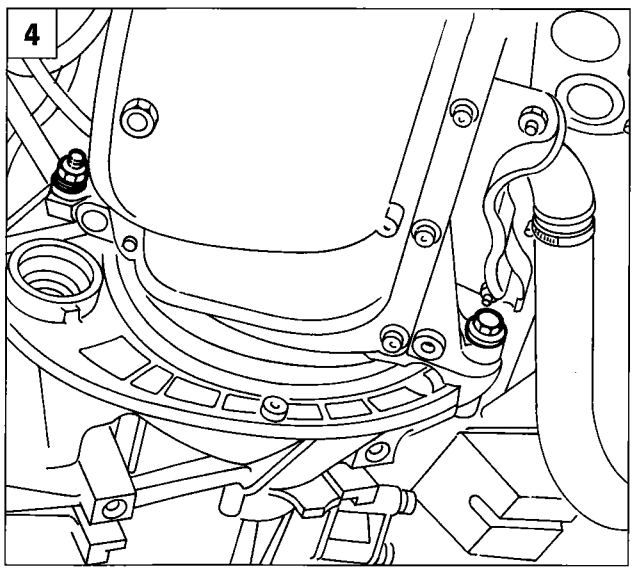

P4F007B04

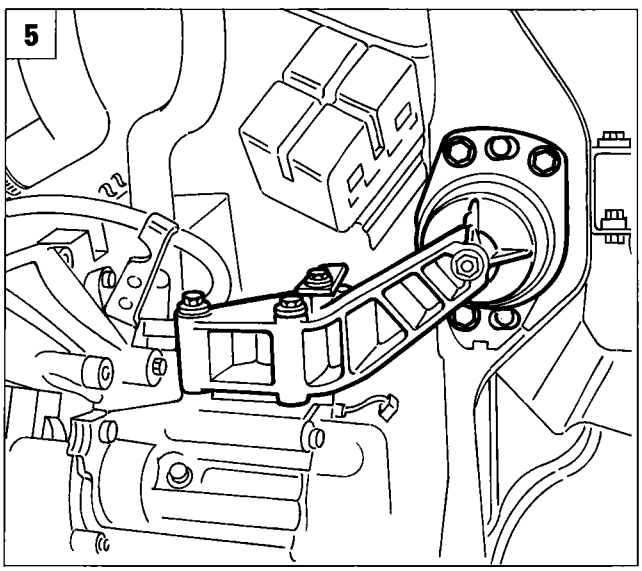

P4F007B05

21-27.

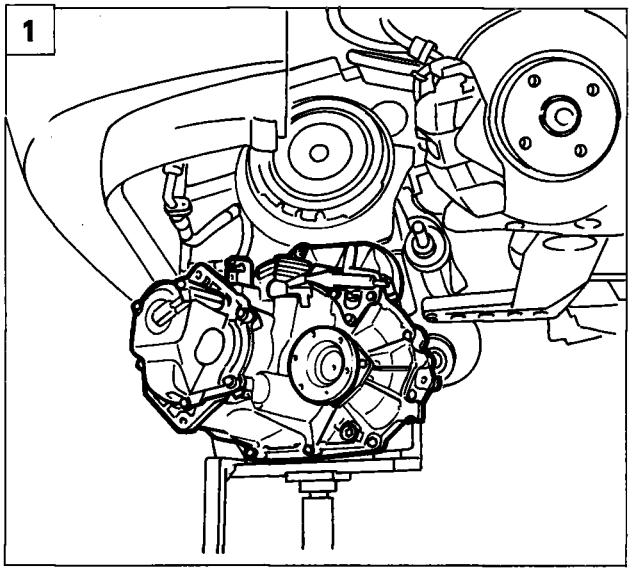

P4F008B01

1. Manoeuvre the hydraulic jack as appropri ate in such a way as to release the gearbox from the centring pins, then remove it from the engine bay by slowly lowering the hydraulic jack.

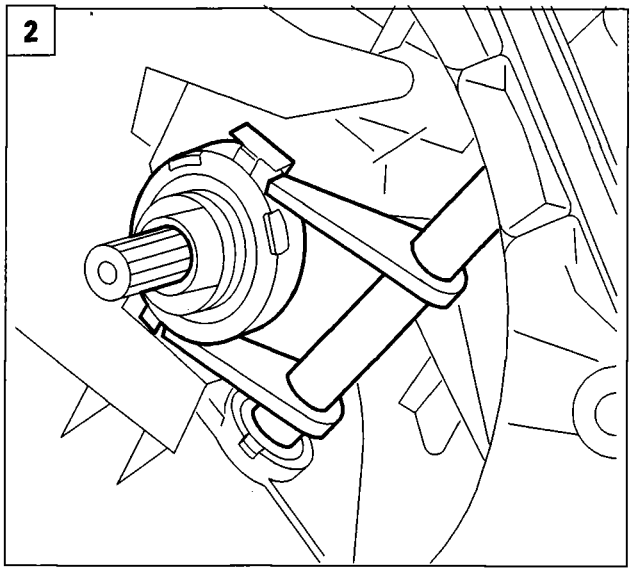

P4F008B02

Refitting

Before refitting the gearbox - differential unit, check that the clutch release bearing has remained in the bellhousing and is not engaged on the clutch. Carry out the following operations:

2. Check that the clutch release bearing is positioned correctly on the gearbox main shaft.

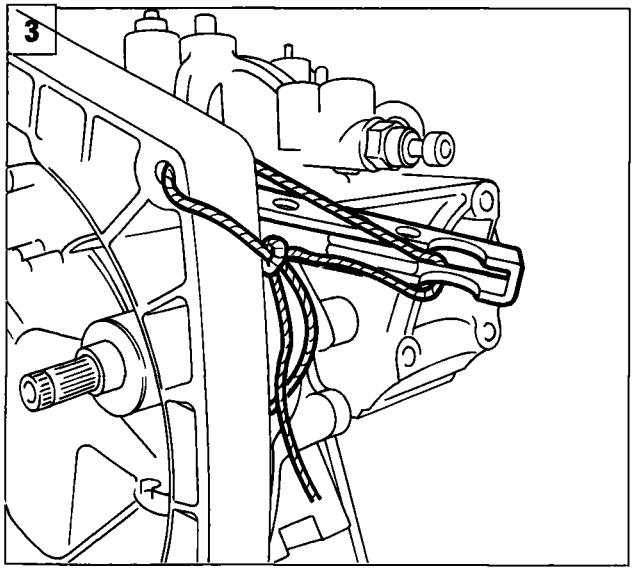

P4F008B03

3. Attach the clutch release lever, in the fully back position, to the gearbox bellhousing, the using the hydraulic jack offer the gearbox - differential unit to the clutch, centring it on the appropriate references, and secure it to the engine. For the subsequent operations, reverse the procedure for removal.

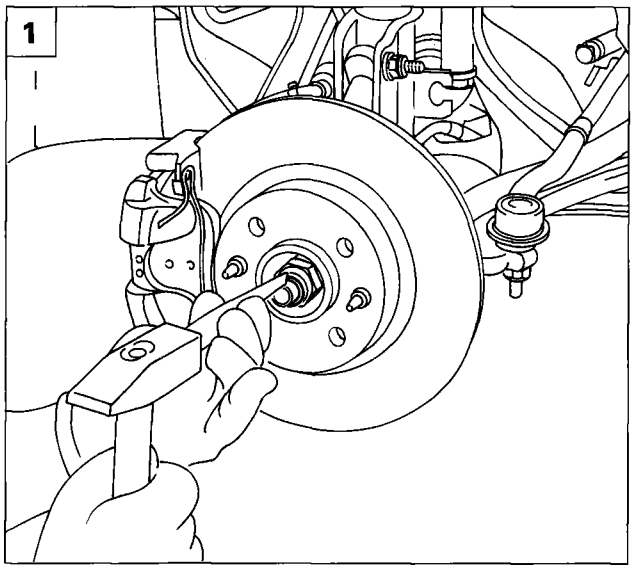

P4F009B01

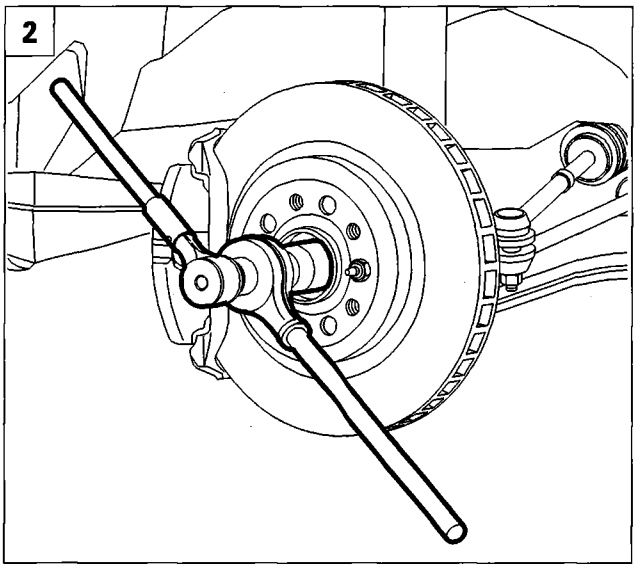

P4F009B02

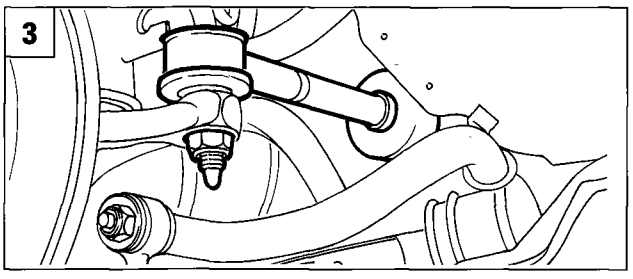

P4F002B05

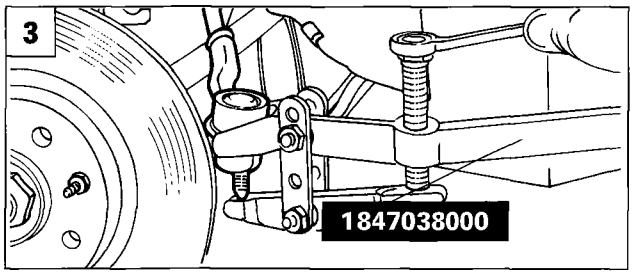

P4F002B06

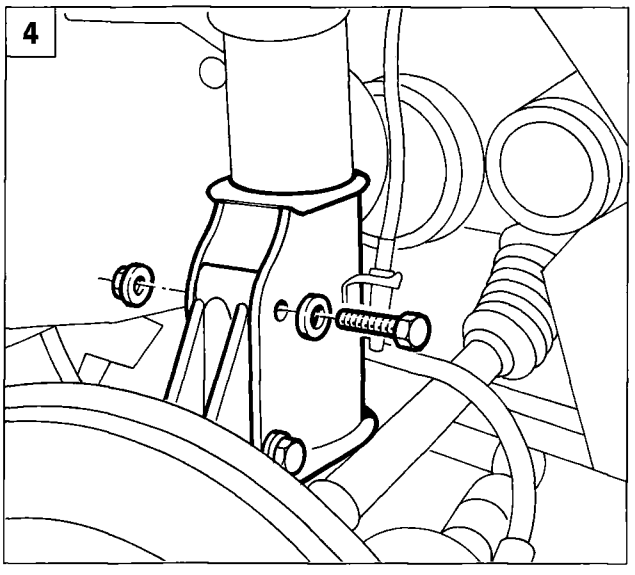

P4F003B05

REMOVING - REFITTING

Place the car on ramps, disconnect the battery's negative pole, remove the front wheels, then proceed as follows:

1. Using a hammer and chisel, relieve the staking on the wheel hub nut.
2. Undo the wheel hub nut.
3. Undo the bolt on the tie rod balljoint head, then using tool 1847038000 disconnect the tie rod balljoint head.
4. Undo the attachments securing the vertical link to the shock absorber, and tilt the vertical link to release the shaft.

21-27.

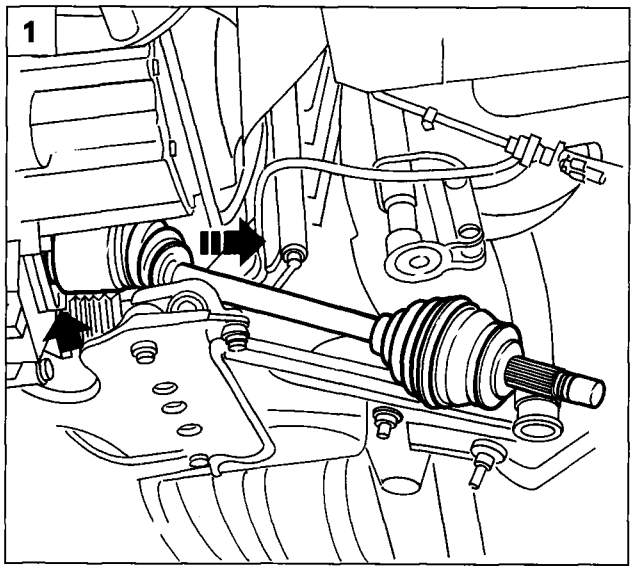

P4F010B01

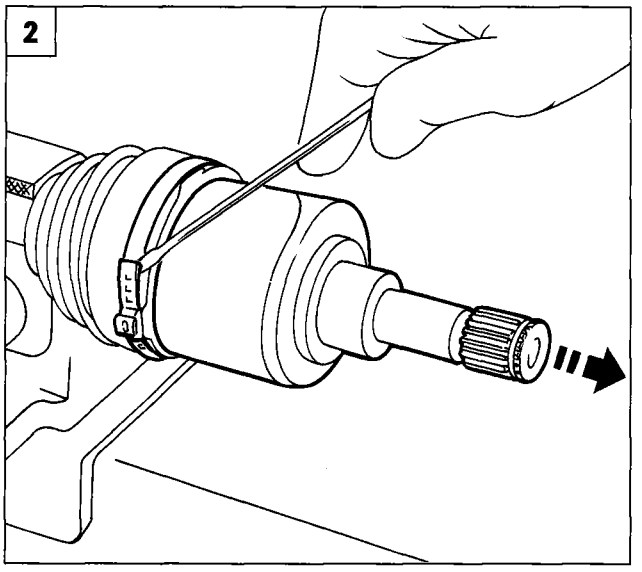

P4F010B02

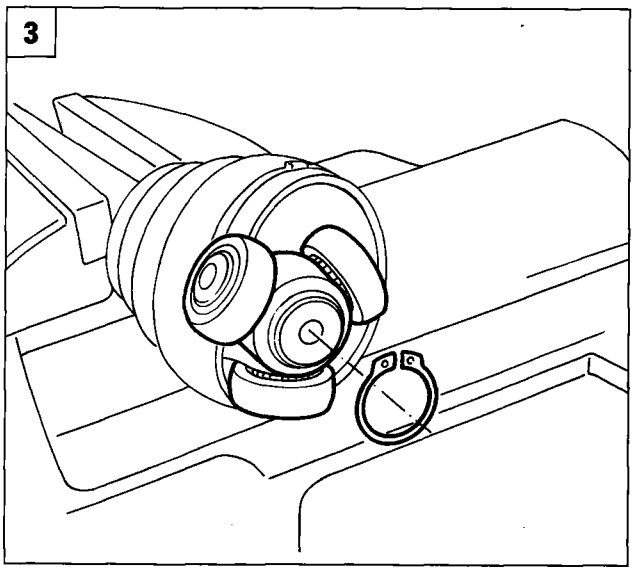

P4F010B03

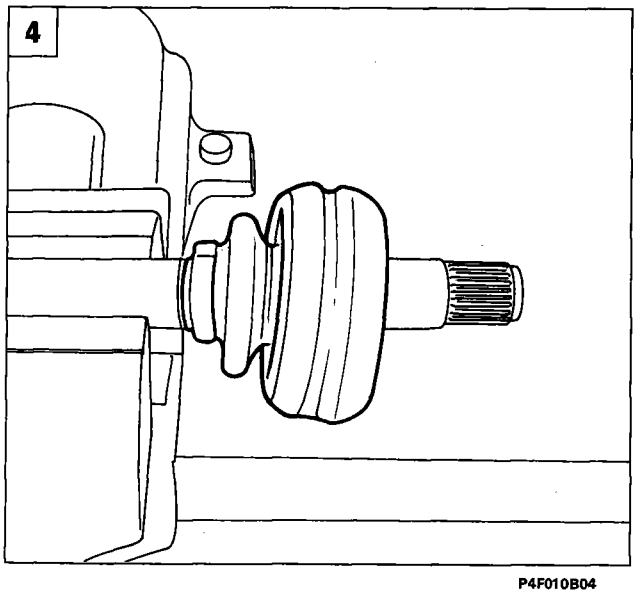

P4F010B04

1. Disconnect the drive shaft from the differential, levering on the engagement point, then withdraw it from the car.

NOTE *To refit, reverse the procedure for removal, tightening the wheel hub nut to the specified torque.*

DISMANTLING

2. Place the drive shaft in a vice, remove the clip securing the dust excluder on the joint on the gearbox side, then remove the joint.

3. Remove the circlip securing the tripod joint, then withdraw the joint from the drive shaft.

NOTE *Replace the tripod joint if it is faulty.*

4. Undo the clip securing the dust excluder on the gearbox side, then remove the dust excluder from the drive shaft.

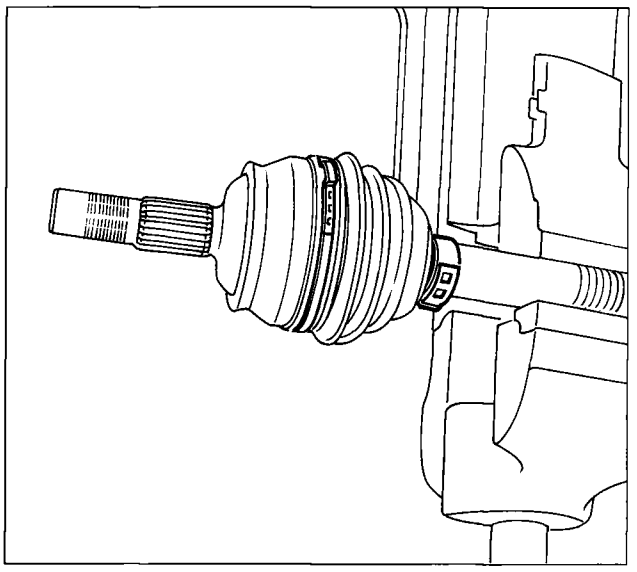

P4F011B01

1. Undo the clips retaining the protective boot on the constant velocity joint on the wheel side, then withdraw it from the side opposite the drive shaft.

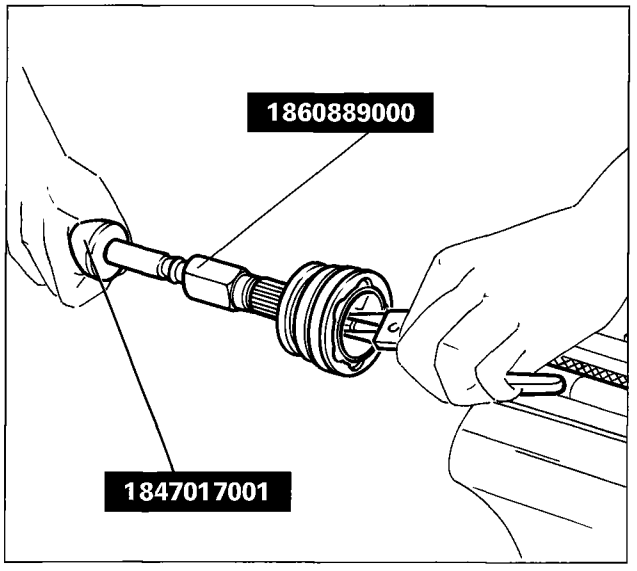

P4F011B02

2. Clean the grease off the inside of the constant velocity joint, then using tools 1847017001 and 1860889000, working simultaneously on the circlip located inside the joint, remove the joint from the drive shaft.

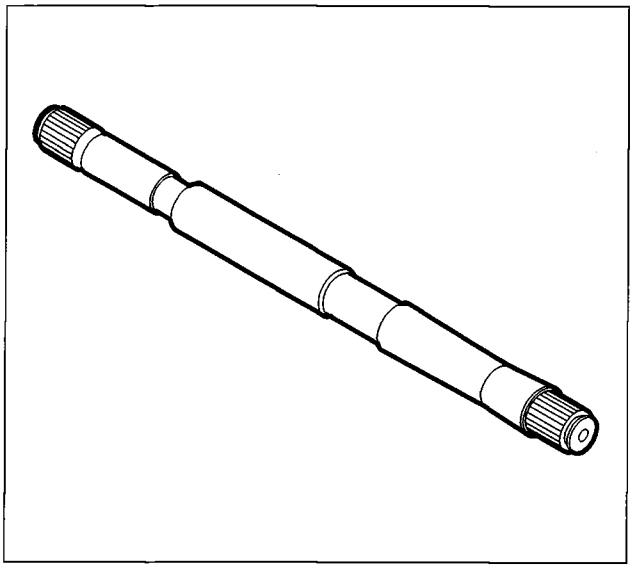

P4F011B03

The damper weight is a part which is supplied as a spare part with the drive shaft, so damper weight cannot be dismantled and refitted.

3. Check that the drive shaft is not deformed or out of true, and that the surface in contact with the seal is not worn.

21-27.

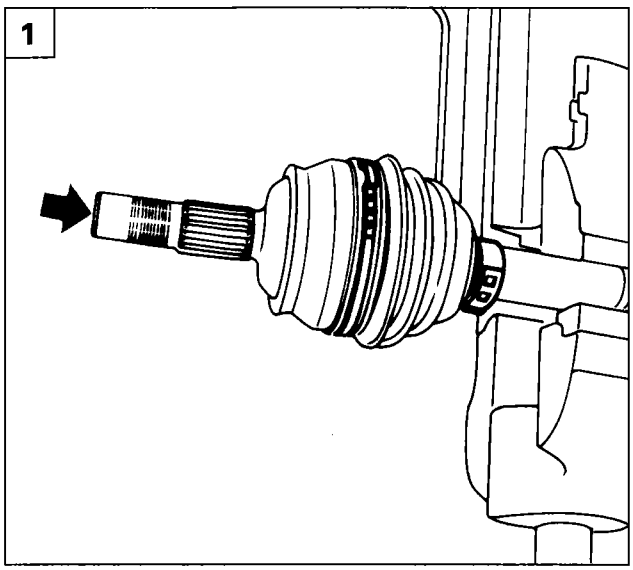

P4F012B01

REFITTING

1. Refit the protective boot on the wheel side, and fit the constant velocity joint using appropriate pressure.

Whenever a dust excluder is removed, it is advisable to replace it, and it is important to fill both the constant velocity joint and the dust excluder with TUTELA MRM2 grease.

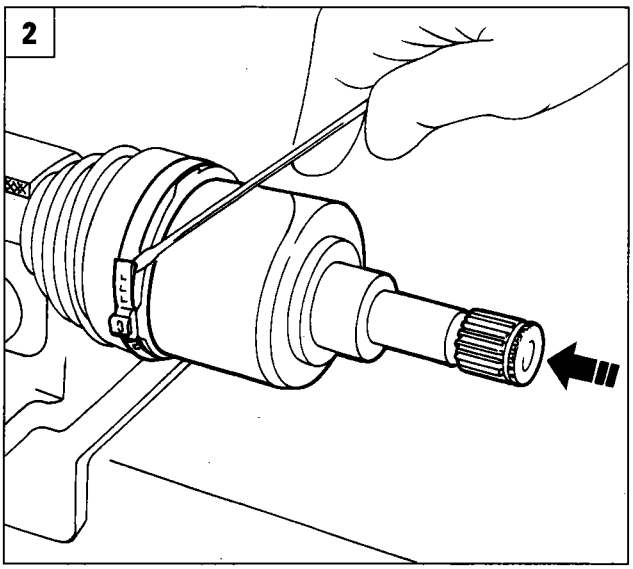

P4F012B02

When refitting, the constant velocity joint on the wheel side must be connected to a green category 2, or white category 3 splined shaft.

2. Refit the protective boot on the gearbox side, fit the tripod joint, locking it with the circlip, then fit the joint on the gearbox side and secure the dust excluder with its clips.

Whenever a dust excluder is removed, it is advisable to replace it, and it is important to fill both the joint and the dust excluder with TUTELA MRM2 grease.

COMPONENTS OF THE TRANSMISSION OF DRIVE

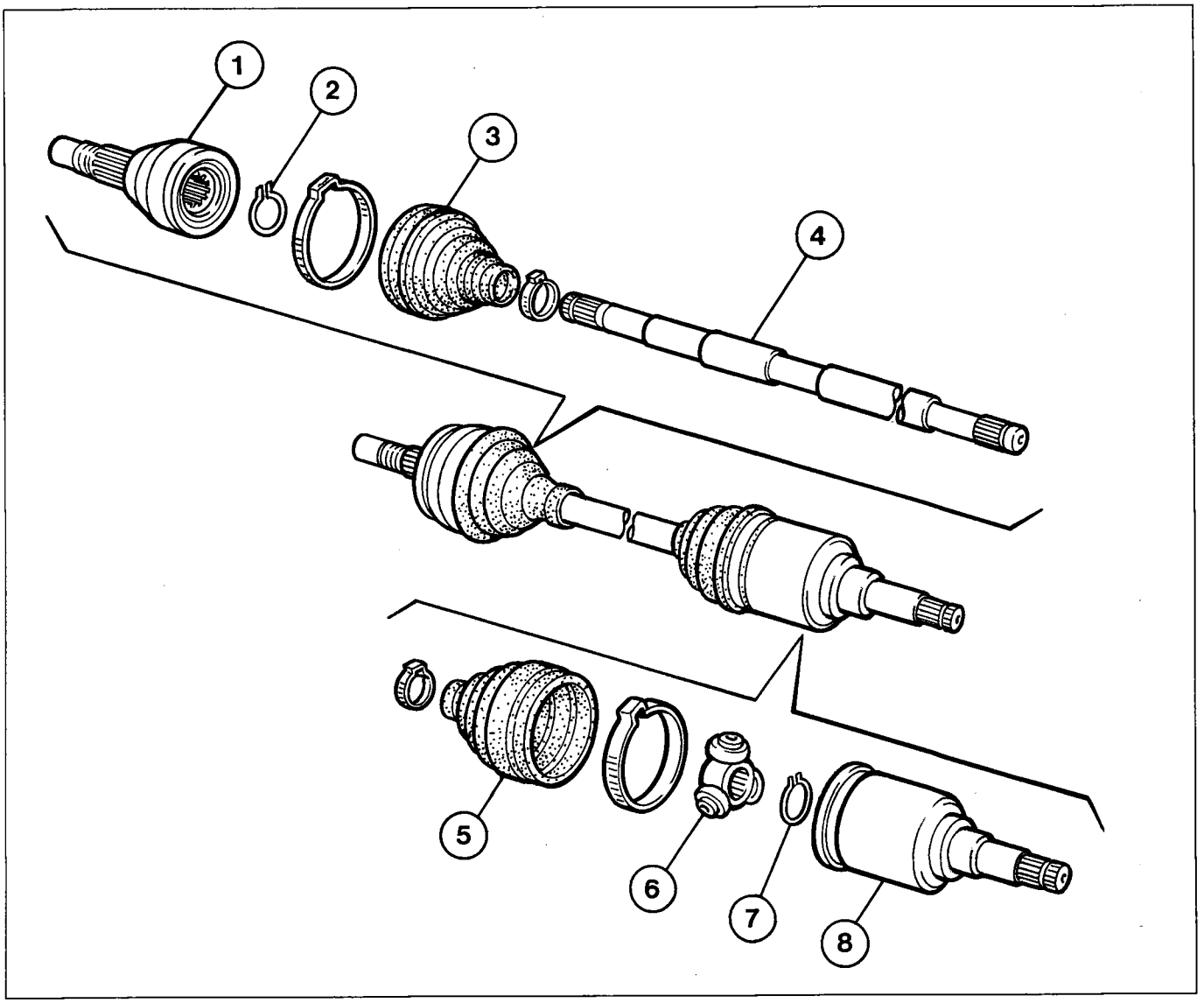

P4F013B01

Key

1. Constant velocity joint, wheel side
2. Constant velocity joint circlip
3. Dust excluder
4. Drive shaft
5. Dust excluder
6. Tripod joint
7. Tripod joint circlip
8. Joint on gearbox side (part not present on 1581 16V engine)

Copyright Fiat Auto

21-27.

DIAGRAM OF GEAR SELECTOR LINKAGE

The Marea and Marea Weekend with 1370 12v engine have a gear selector linkage comprising a rigid arm (3) and a flexible cable (4).
The rigid arm (3) controls gear selection via a relay link (5); the flexible cable (4) instead controls gear engagement.
A safety device (7) has also been introduced to prevent accidental engagement of reverse.

To operate this device, the gearlever knob (1) must be pressed downwards, which, by means of the cable (2), lifts the pushrod of the device (7), which in turn allows the control shaft (6) to move and select reverse gear.

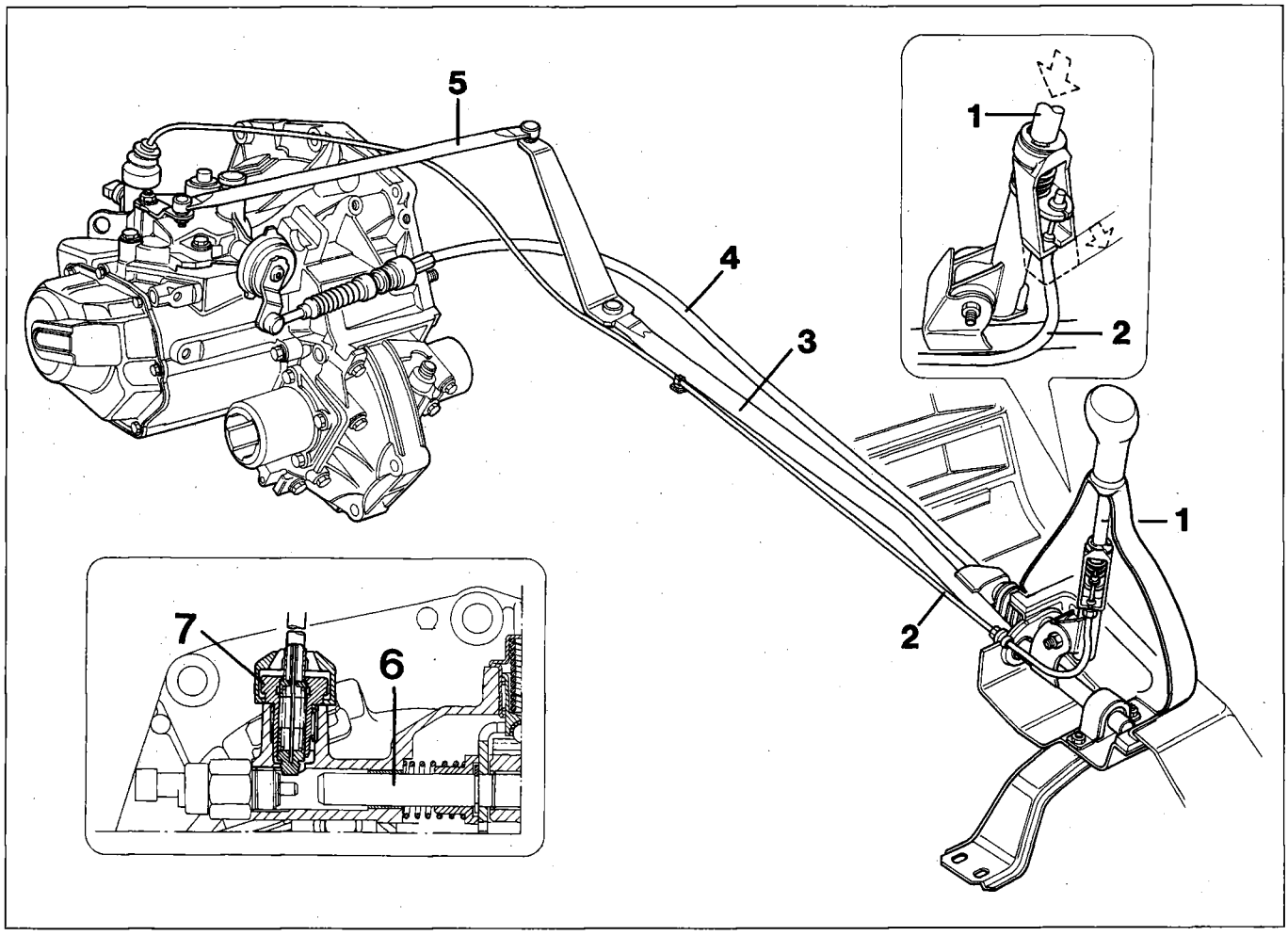

P4F014B01

Perspective view of the gear selector linkage with inhibitor of accidental engagement of reverse

1. Sliding part of gear lever
2. Flexible cable controlling inhibitor of accidental engagement of reverse
3. Gear selector arm
4. Gear engagement cable
5. Gear selector link
6. Gear selection and engagement shaft
7. Device inhibiting accidental engagement of reverse

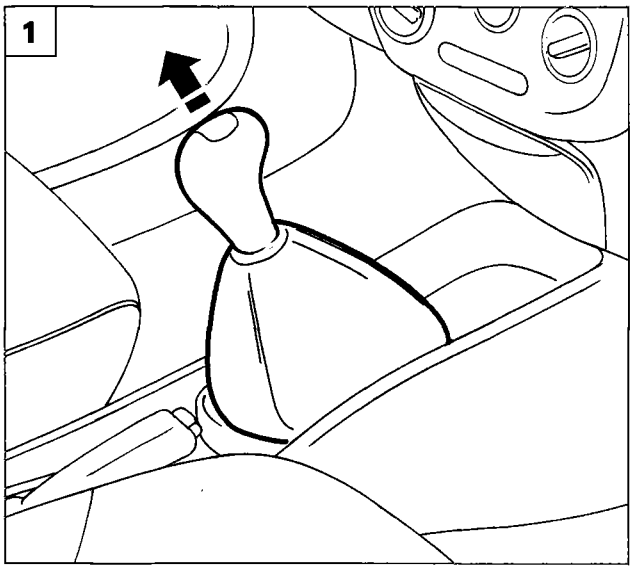

P4F015B01

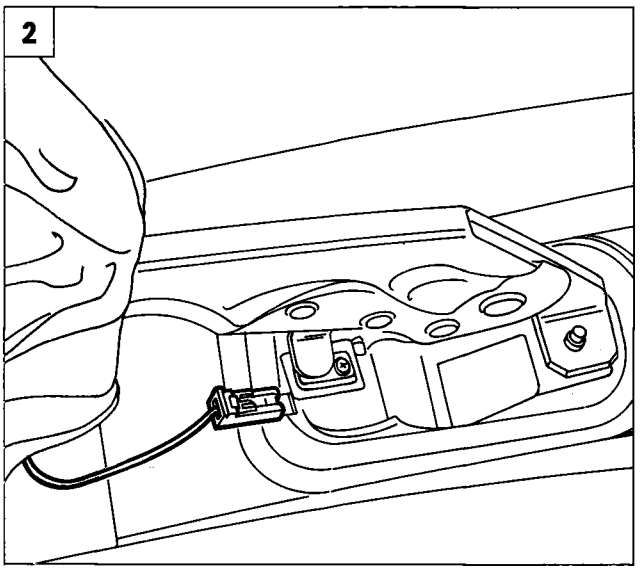

P4F015B02

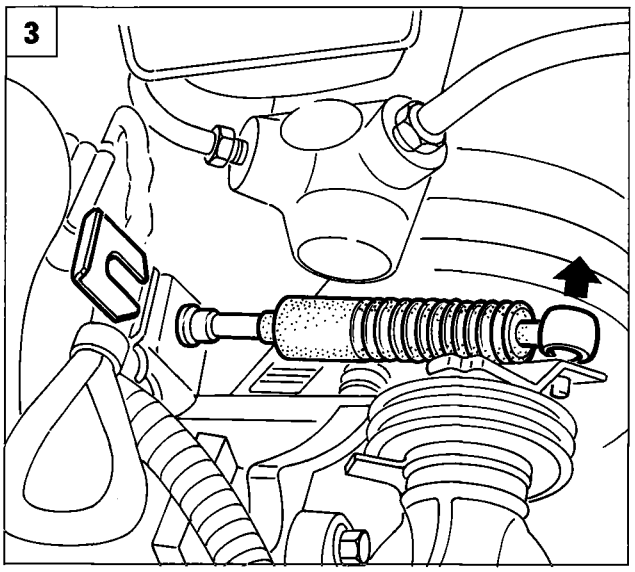

P4F002B03

REMOVING - REFITTING

Disconnect the battery's negative pole, remove the engine compartment bottom guard and remove the gear selector linkage as follows:

1. Remove the gear lever trim from inside the car, without removing the gear lever knob.
2. Remove the handbrake protective gaiter, then disconnect the wiring connection underneath.
3. Disconnect the gear engagement cable from the gearbox, removing the head and releasing the clip.
4. Remove the reverse inhibitor from the gearbox.
5. Remove the reaction and gear selection link from the gearbox.

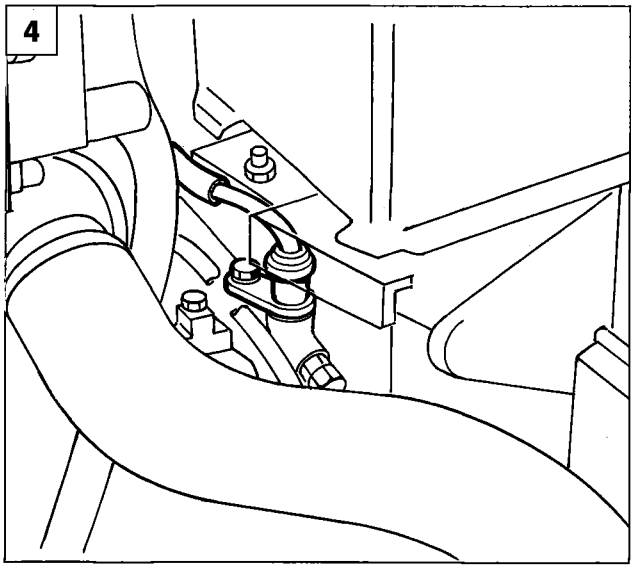

P4F015B03

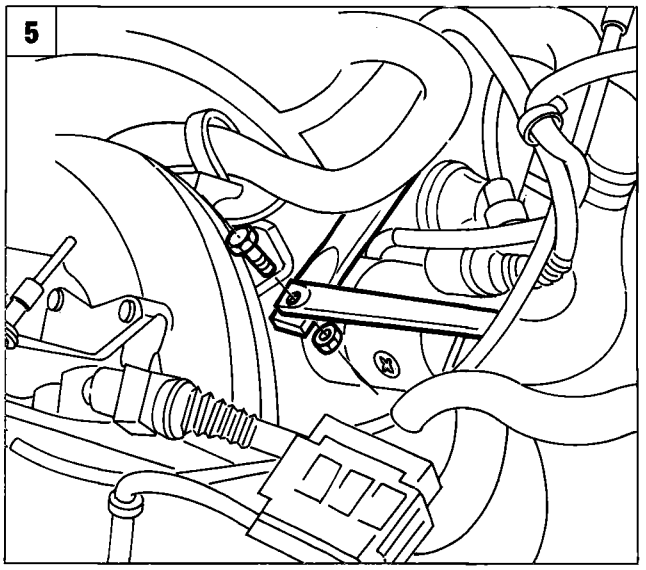

P4F015B04

Copyright Fiat Auto

21-27.

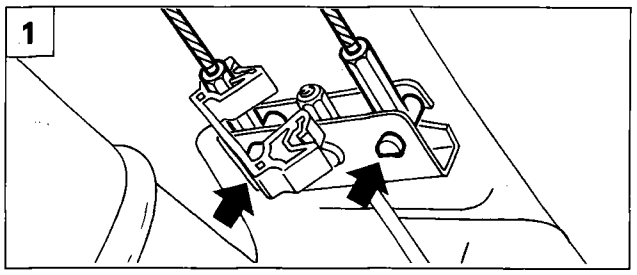

P4F016B01

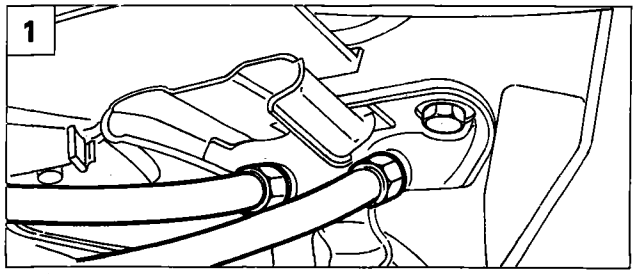

P4F016B02

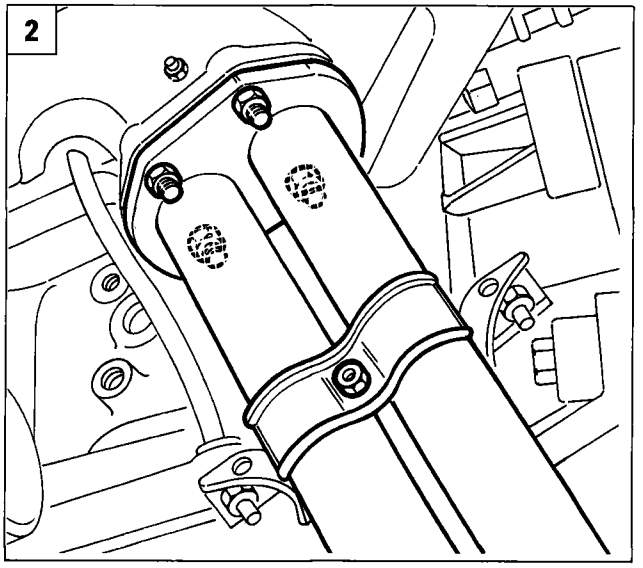

P4F004B03

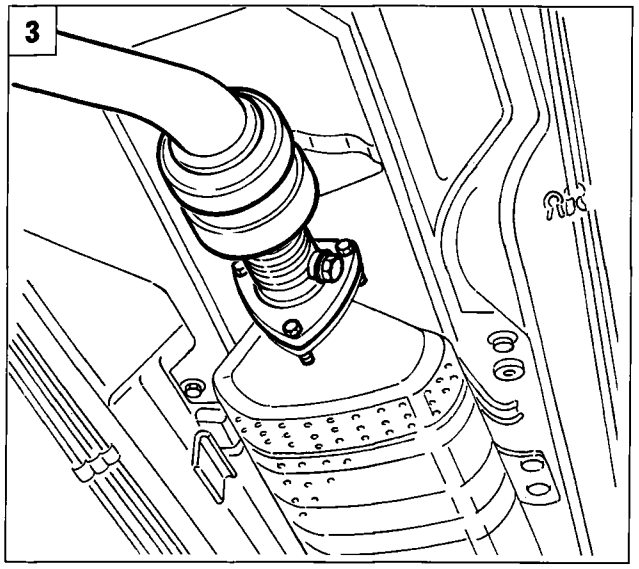

P4F004B04

1. Raise the car, then disconnect the handbrake cables from the mounting and release them from the bracket.
2. After disconnecting the Lambda probe wiring connector, remove the bolts securing the first section of the exhaust pipe to the manifold.
3. Disconnect the rear attachments of the first section of the exhaust pipe.
4. Release the exhaust pipe from the rubber mounting indicated.
5. Undo the bolts securing the exhaust pipe front mounting bracket.

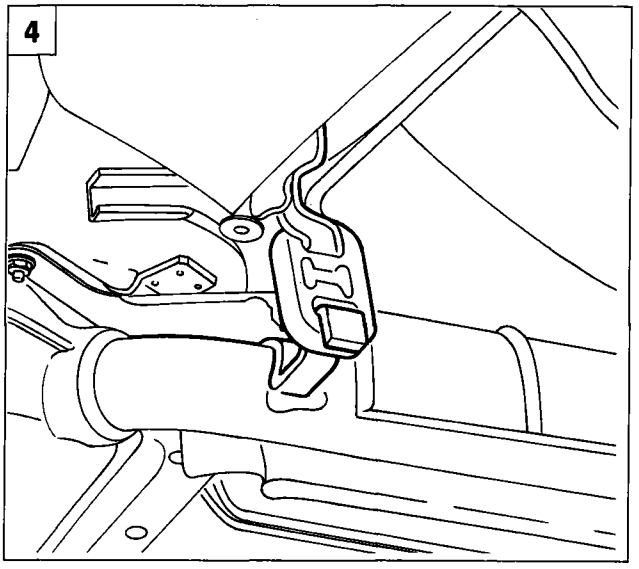

P4F016B03

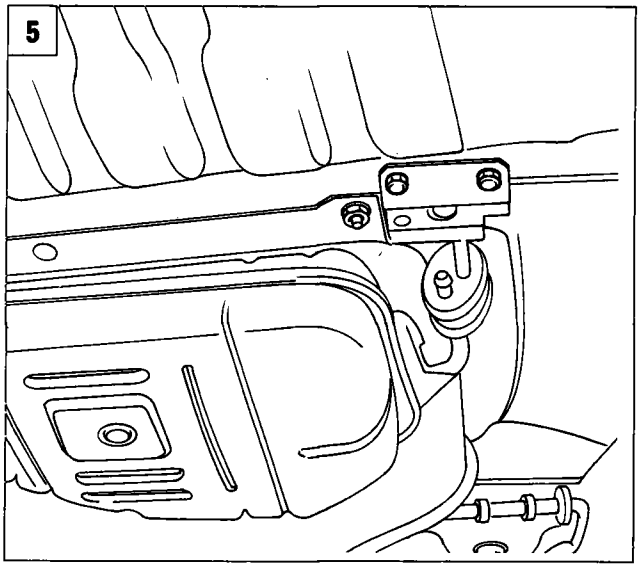

P4F016B04

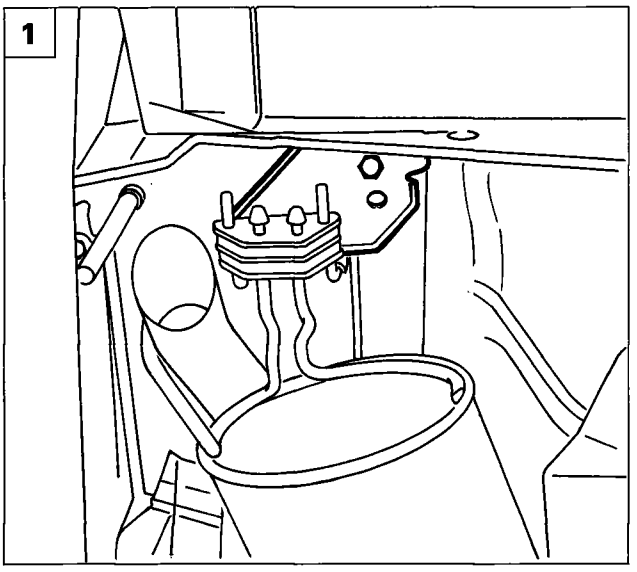

P4F017B01

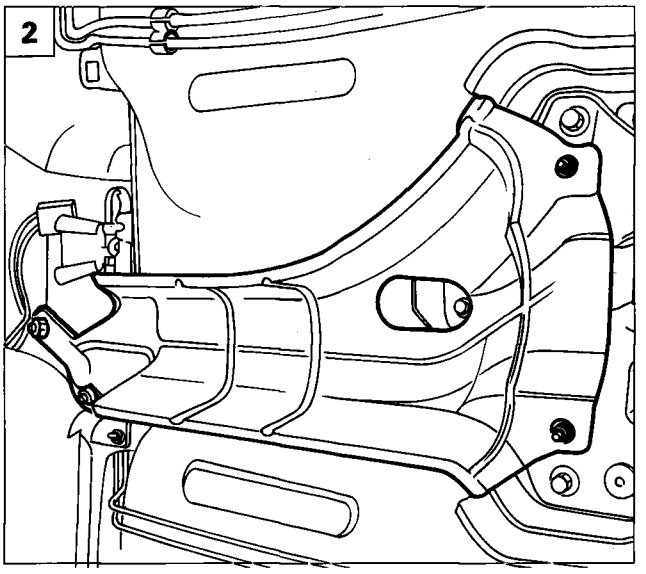

P4F017B02

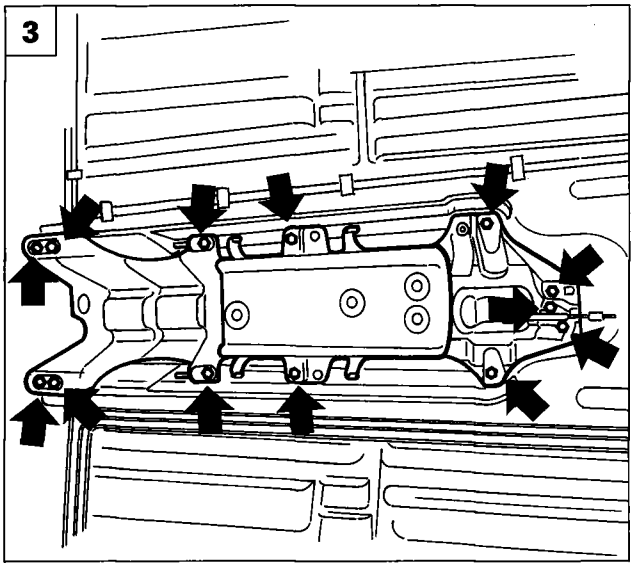

P4F017B03

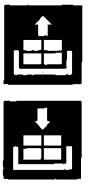

1. Undo the bolt securing the exhaust pipe rear mounting bracket, then withdraw the exhaust pipe from the car.
2. Remove the heat shield by undoing the attachments illustrated.
3. Undo the front and rear bolts securing the external gearchange linkage mounting and handbrake.
4. Lower the assembly carefully from its seating, and undo the nuts securing the external gearchange linkage assembly to the gear lever mounting, and remove it from the car.

Withdraw the cables and reaction rod from the engine compartment and withdraw the assembly from the car.

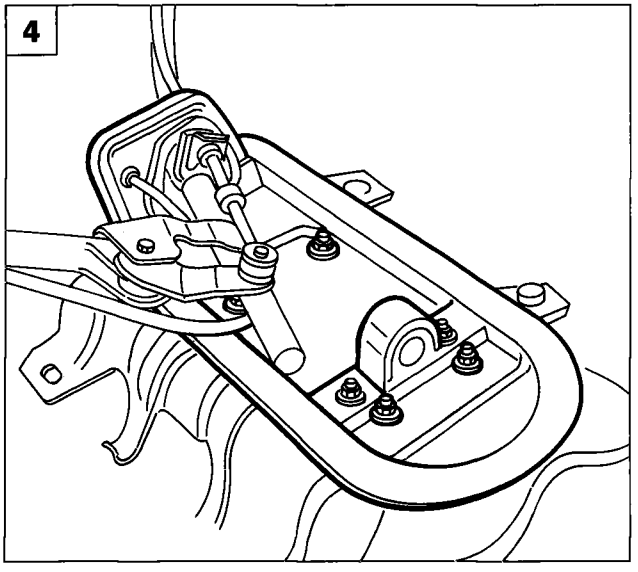

P4F017B04

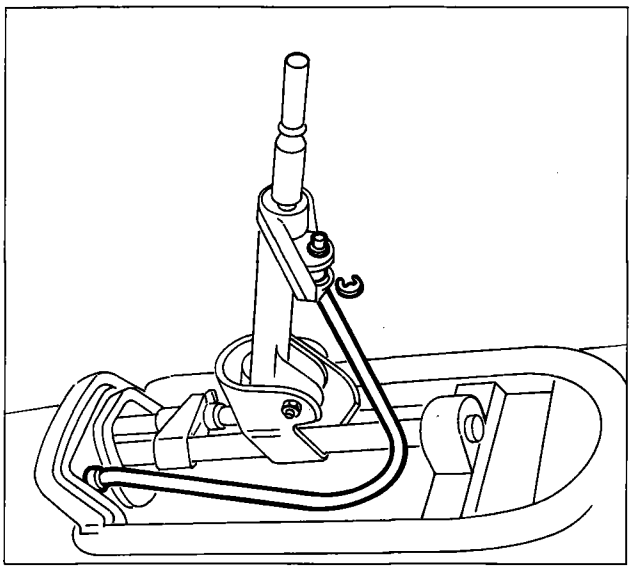

P4F018B01

DISMANTLING AT THE BENCH

Dismantling - refitting reverse inhibitor

- Remove the circlip, withdraw the cable from the plastic mounting, then withdraw it from the assembly.

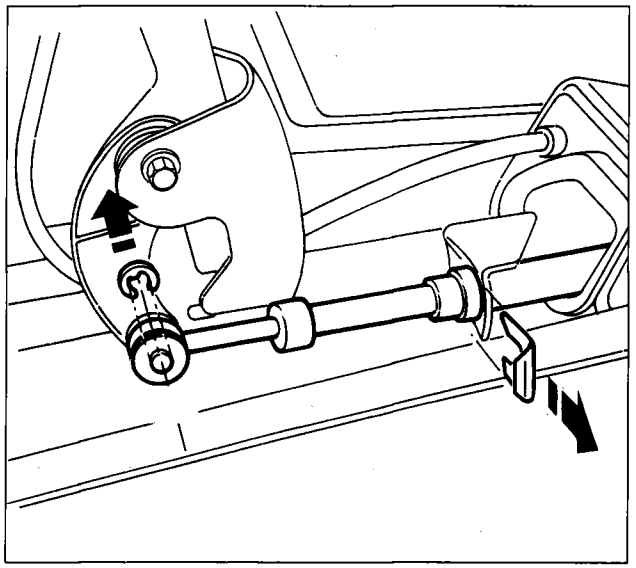

P4F018B02

Dismantling - refitting gear engagement cable

- Remove the gearchange lever circlip and clip from the gearchange lever mounting, then withdraw the cable after releasing it from its clip.

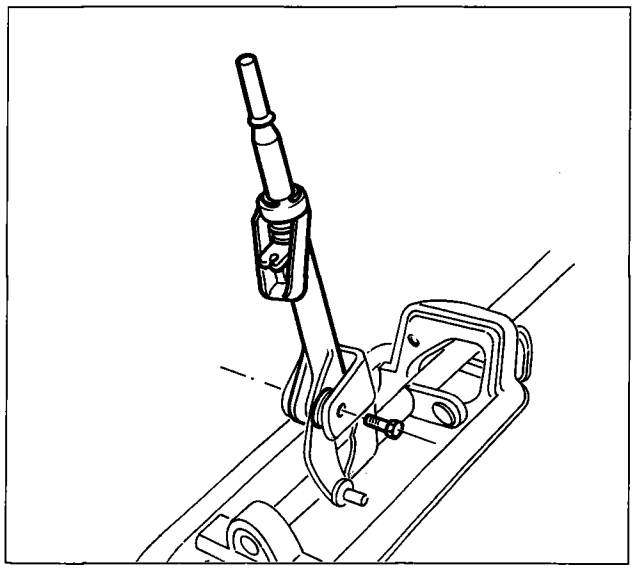

P4F018B03

Dismantling - refitting gear lever

- Disconnect the cable inhibiting the engagement of the gear engagement cable;
- undo the bolt securing the mounting, then remove the lever.

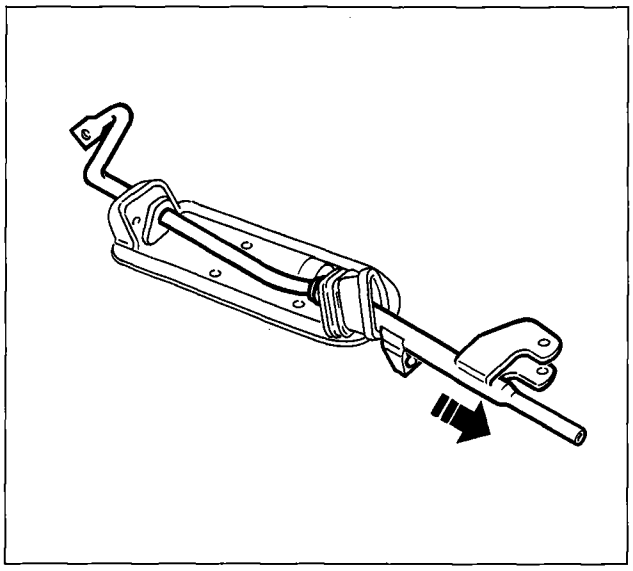

P4F019B01

Dismantling - refitting reaction link

- Remove the reverse inhibiting cable, gear engagement cable and gear lever, then withdraw the reaction link.

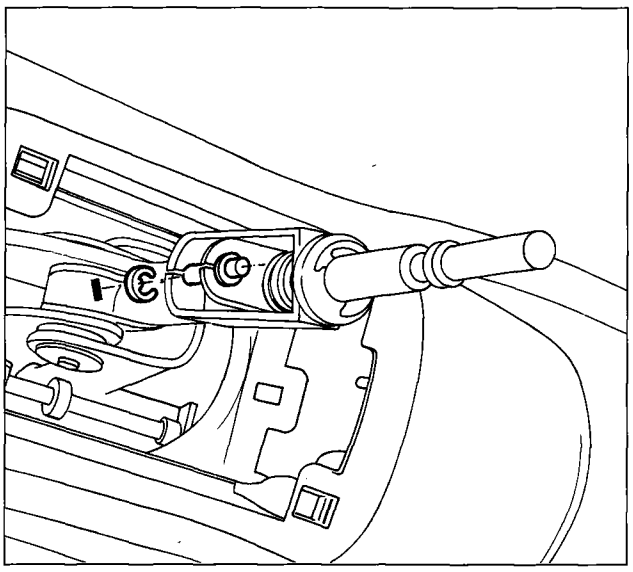

P4F019B02

REMOVING - REFITTING GEAR CHANGE LEVER ON CAR

- Remove the gear change lever trim;
- disconnect the reverse inhibiting cable from the gear change lever, after removing the circlip;

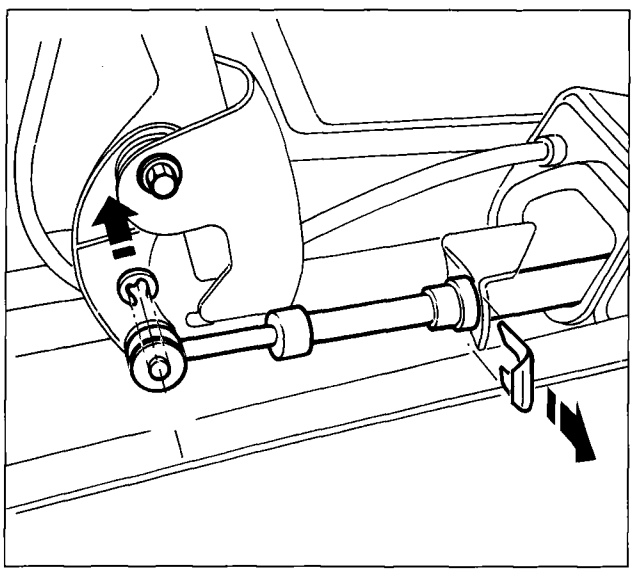

P4F019B03

- disconnect the cable from the lever mounting, removing the retaining ring;
- undo the bolt securing the lever to the mounting, then remove it from the car.
- To refit, reverse the procedure for removal.

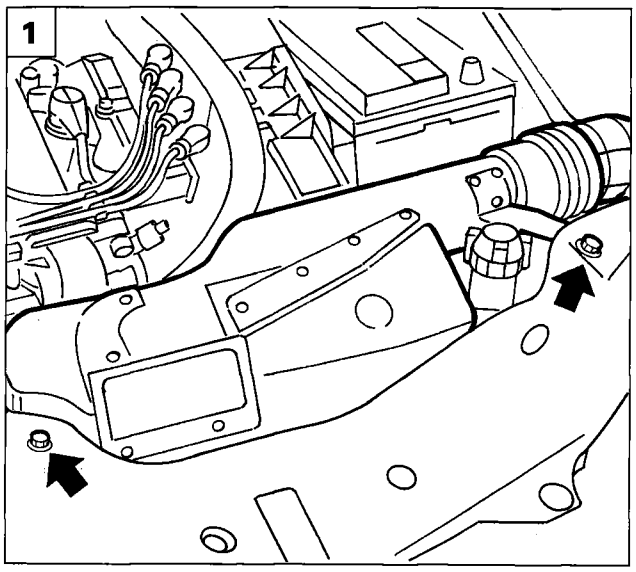

P4F020B01

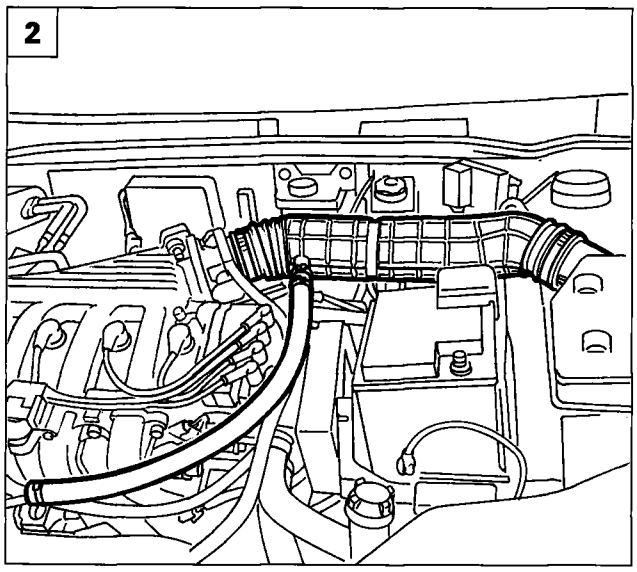

P4F020B02

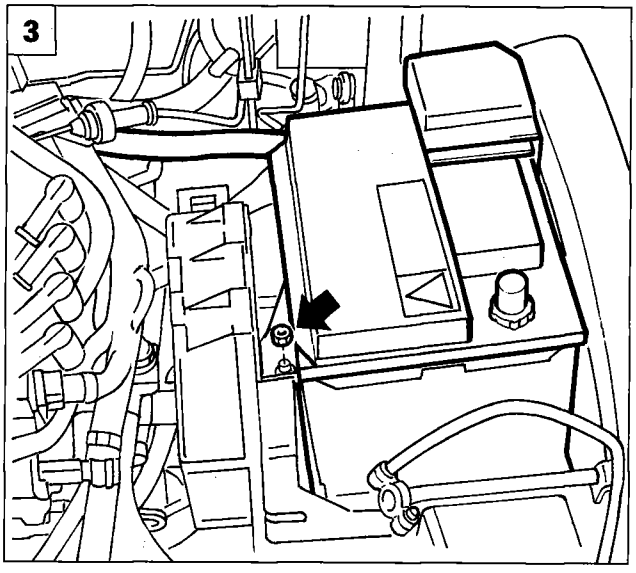

P4F020B03

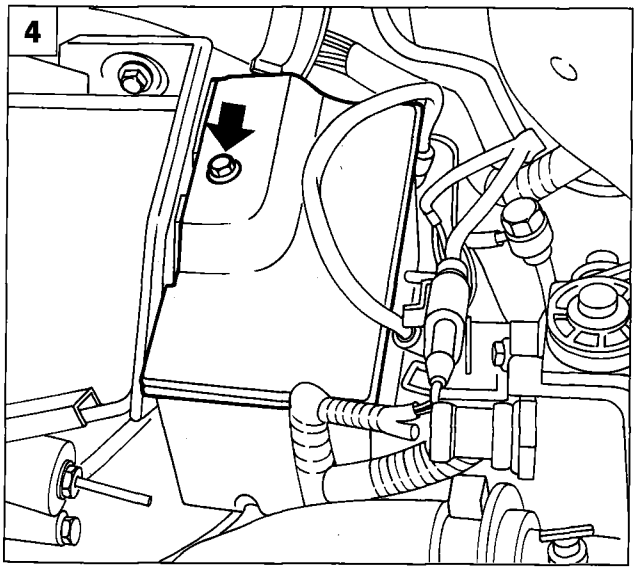

P4F020B04

REMOVING-REFITTING

Removing

Place the car on ramps, disconnect the battery's negative pole and remove the front wheels, then proceed as described below:

1. Remove the air intake duct by undoing the bolts shown in the figure, securing it to the cross panel.
2. Remove the air intake duct by undoing the clips shown in the figure, then remove it from the engine compartment complete with oil vapour recirculation pipe.
3. Lift the protective cover on the battery's positive pole and disconnect the cable; undo the nut securing the battery to the cage, then remove it from the engine compartment.
4. Remove the cover from the relay and fuse box by undoing the bolt indicated.

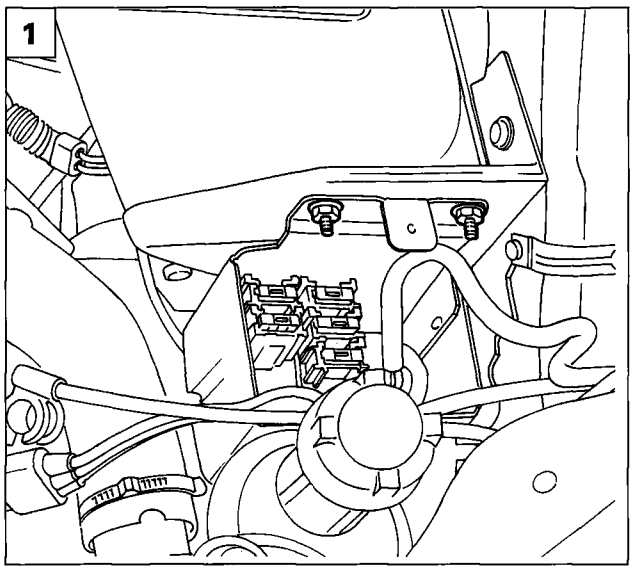

P4F001B04

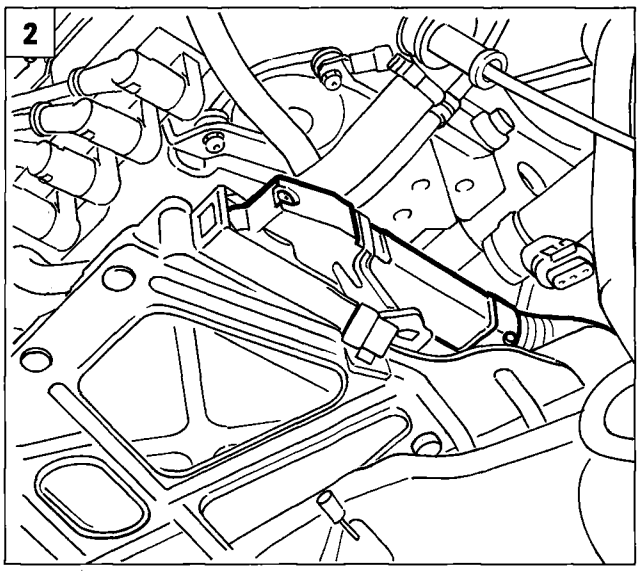

P4F021B01

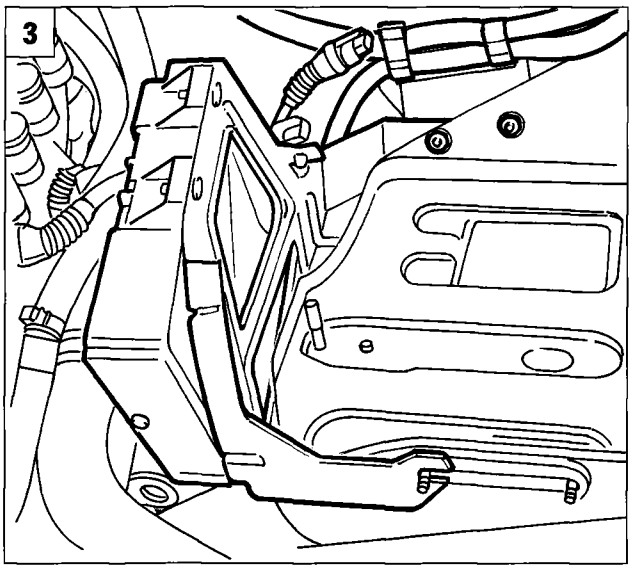

P4F021B02

1. Remove the nuts securing the fuse and relay box to the battery cage, then move the box over to one side.
2. Disconnect the i.e. control unit supply connector.
3. Remove the nuts securing the i.e. control unit mounting bracket, then remove the control unit from the engine compartment. The nuts indicated also secure the starter motor supply cables and connection between front cable and fuel injection cable.
4. Remove the screws (1) and slacken the bolt (2) securing the battery cage to the body shell. Before removing the cage, disconnect the cable retaining clip underneath.
5. Disconnect the clutch cable by undoing the nut (1) and locknut (2) shown in the figure. Also disconnect the earth cable (3) from the gearbox.

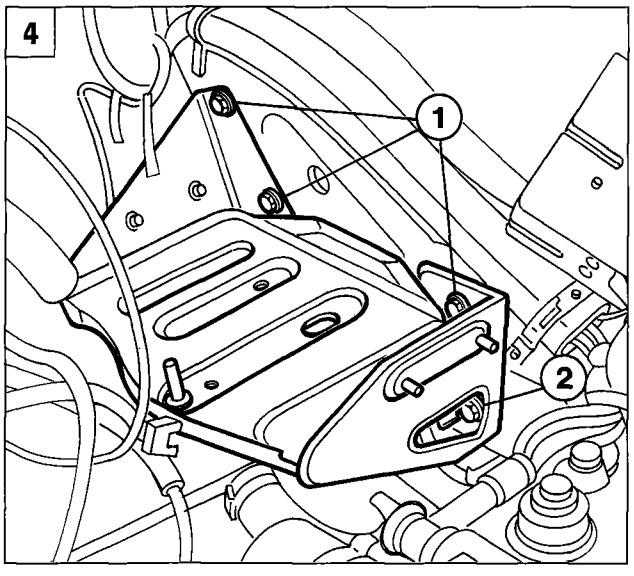

P4F021B03

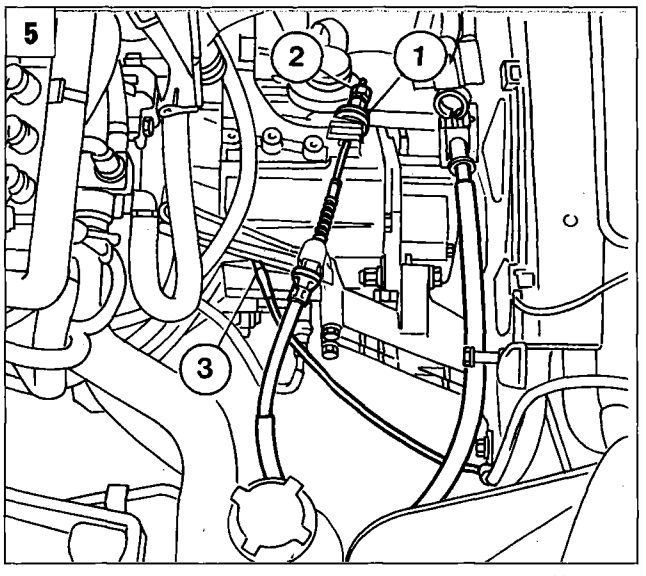

P4F021B04

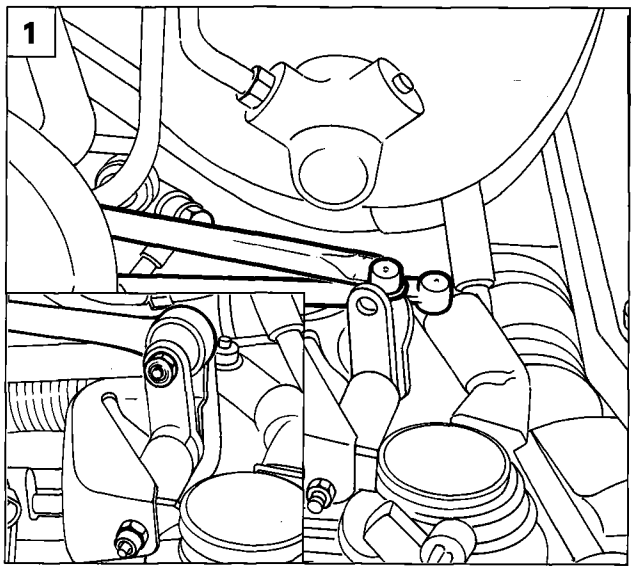

P4F022B02 P4F022B01

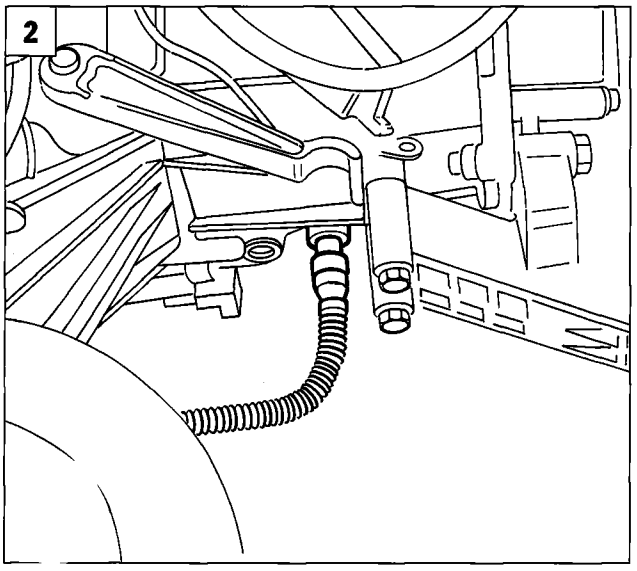

P4F022B04

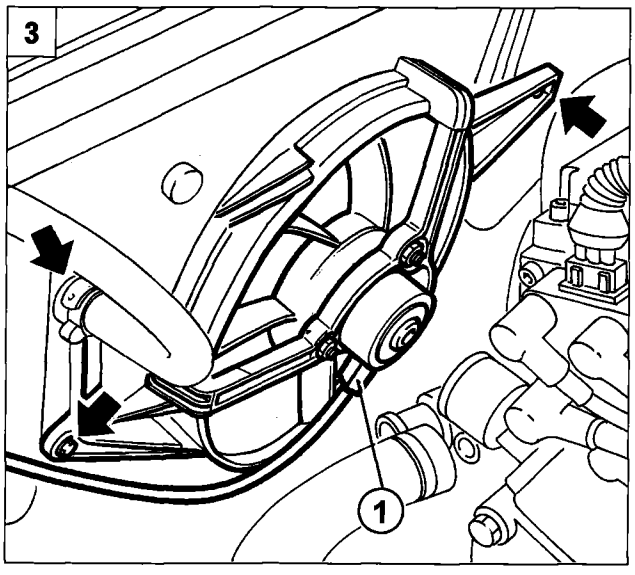

P4F022B03

1. Disconnect the reaction link shown in the box and the gear selection and engagement levers from the gearbox; also disconnect the speedometer sensor wiring connection.
2. Disconnect the reversing lights connector from the gearbox.
3. Remove the electric fan by undoing the attachments, making sure the disconnect the supply connector (1).
4. Disconnect the starter motor supply cables.
5. Remove the starter motor by undoing the bolts shown in the figure.

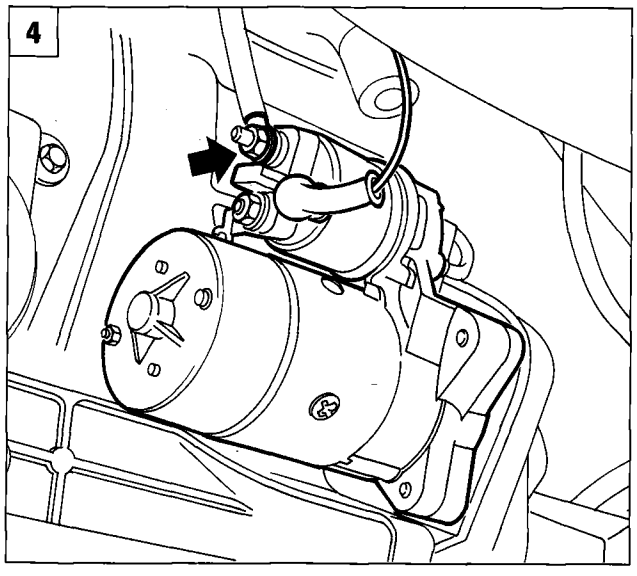

P4F022B05

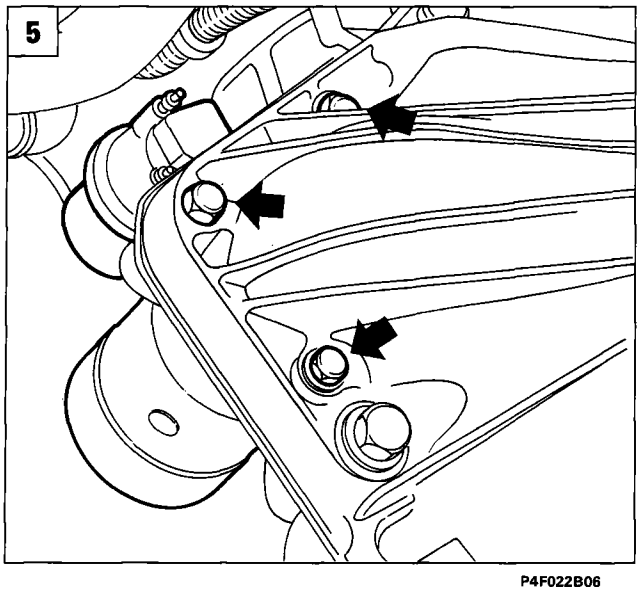

P4F022B06

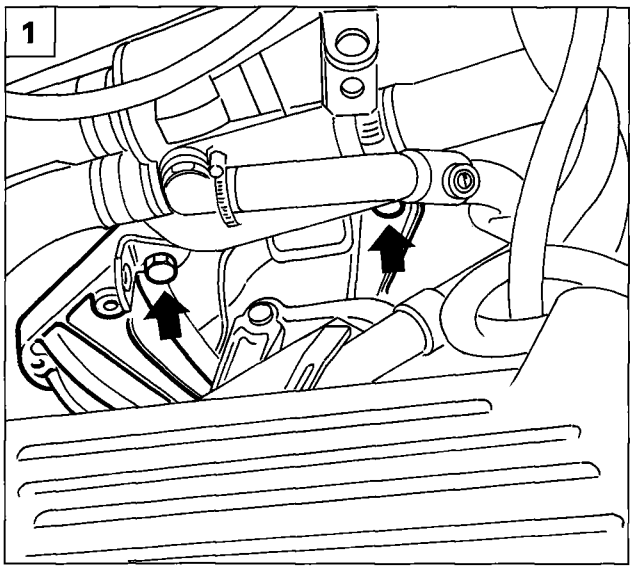

P4F023B01

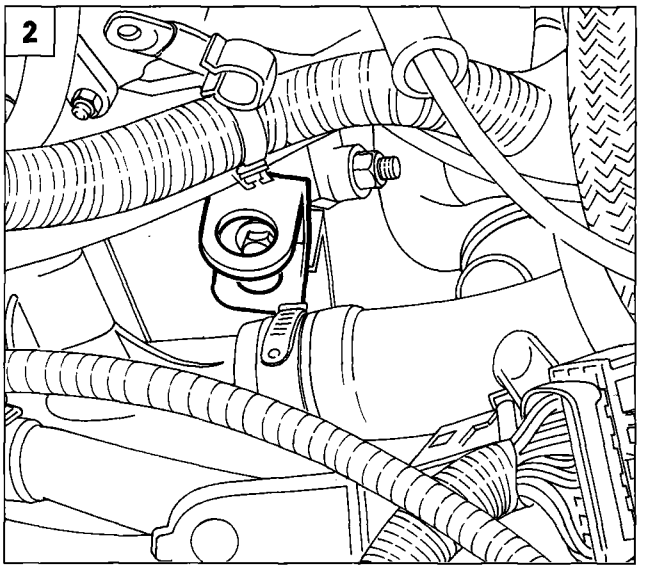

P4F023B02

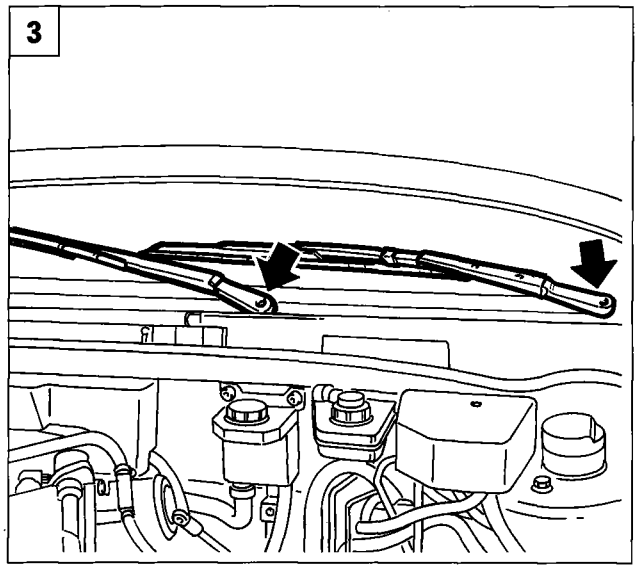

P4F54AB02

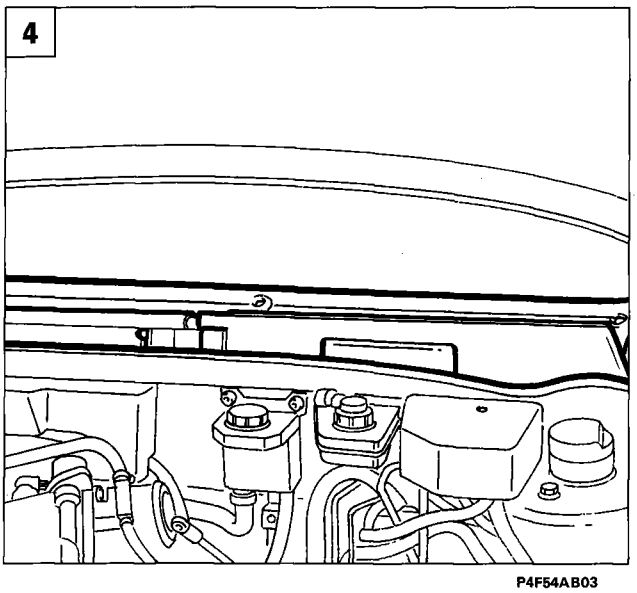

P4F54AB03

1. Remove the gearbox top attachments.
2. Place a suitable supporting eyelet at the point shown in the figure, for hooking the power unit on during removal of the gearbox.
3. Undo the nuts securing the windscreen wiper arms, after removing their protective caps.
4. Remove the anti-pollen filter cover by undoing the screws illustrated.

21-27.

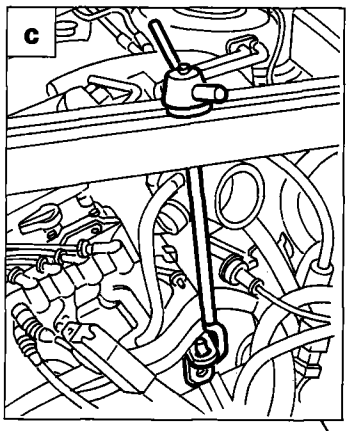

P4F024B02

1. Fit the power unit support crossbeam 1860851000 and the special adaptor 1860851001 in the appropriate points of support.
   a. Front support: fit the tool level with the bonnet catch seating, so that it rests on the front subframe.
   b. Rear support: position the tool level with the central reinforcement of the flame-proof bulkhead.
   c. Secure the hook of the crossbeam to the eyelet installed previously, level with the thermostat.

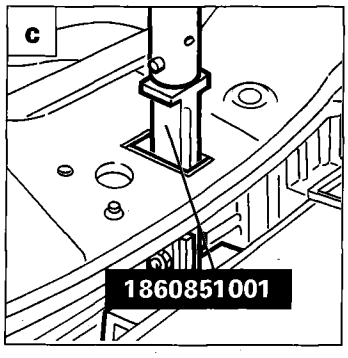

P4F006B03

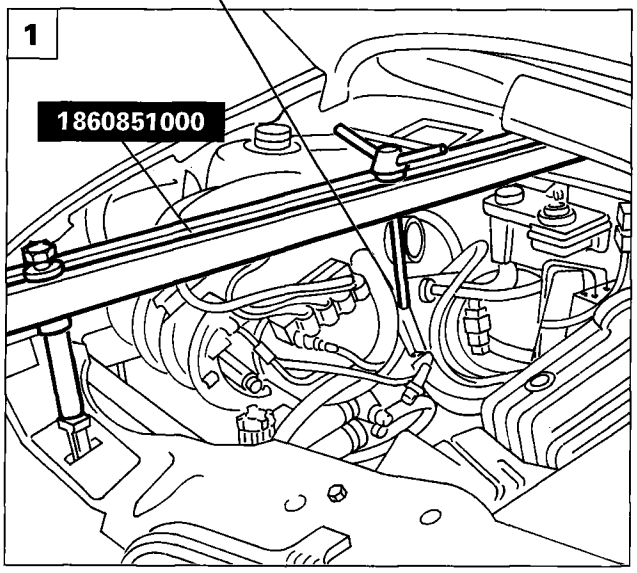

P4F024B01

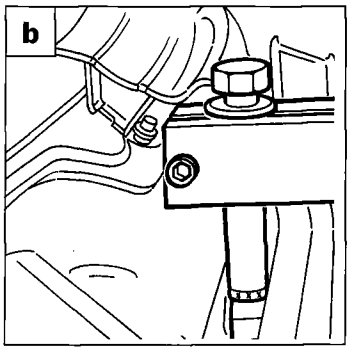

P4F006B05

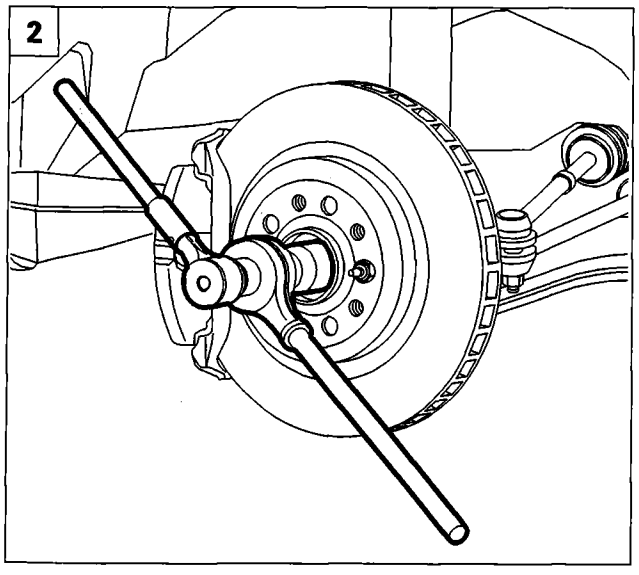

P4F009B02

2. Relieve the staking on the wheel hub nut then remove the nut (gearbox side and timing gear side).

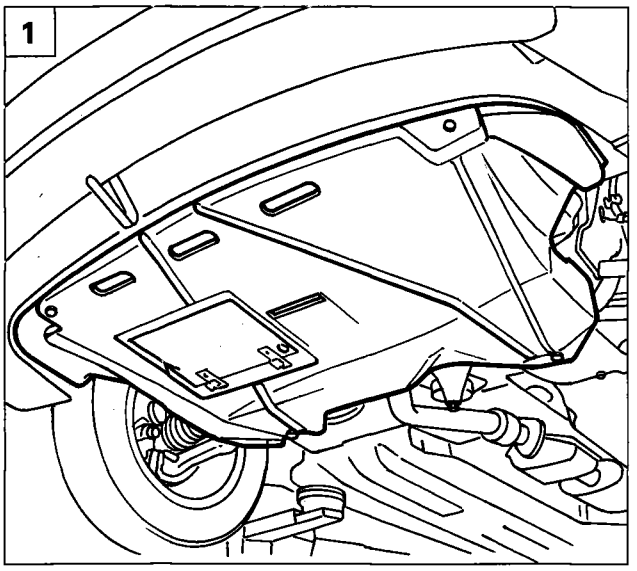

P4F003B01

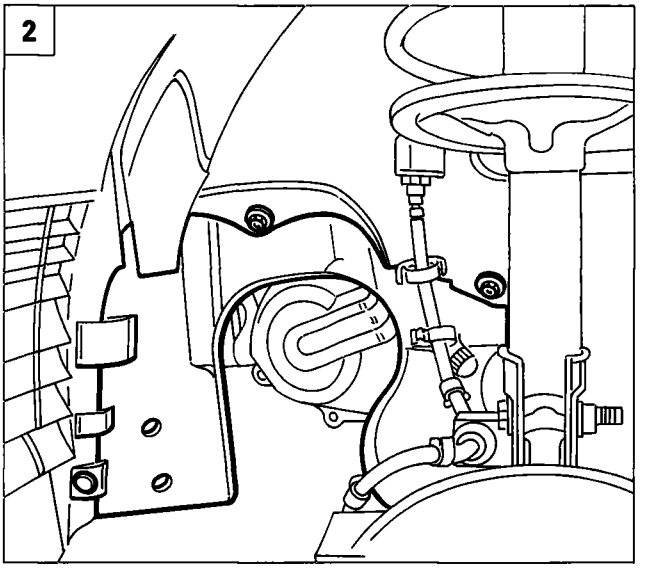

P4F003B02

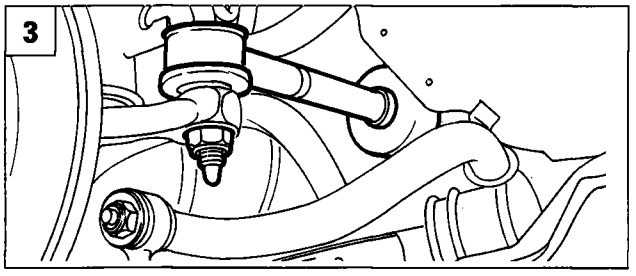

P4F002B05

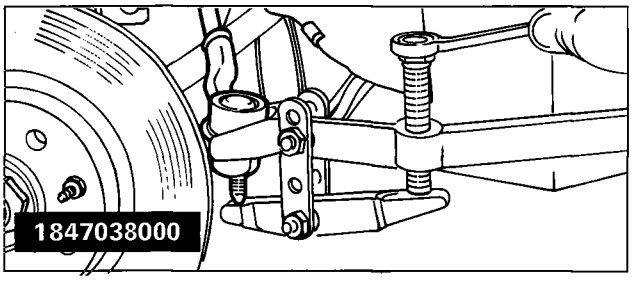

P4F002B06

1. Remove the engine compartment bottom guard.
2. Remove the plastic wheelarch protection on the gearbox side by undoing the bolts and retaining button shown in the figure.
3. Remove the nut securing the tie rod end balljoint head to the vertical link, then withdraw the head from the vertical link arm using the puller 1847038000.
4. Remove the bolts securing the vertical link to the shock absorber.
5. Rotate the vertical link as appropriate in order to withdraw the drive shaft from the wheel hub. Repeat the operation on the other drive shaft.

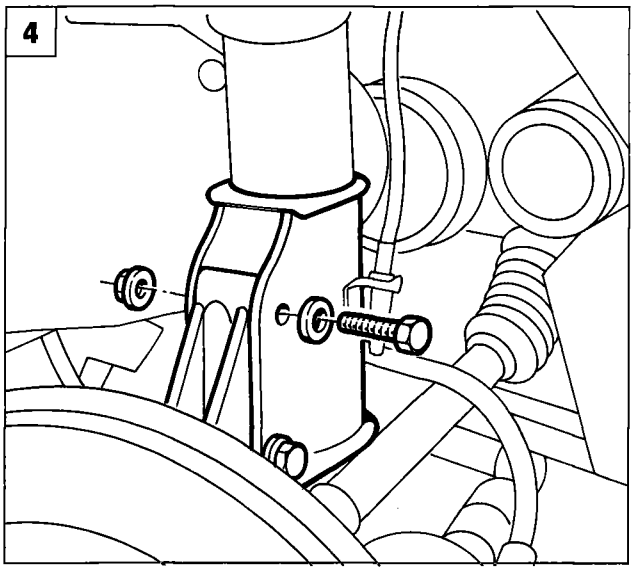

P4F003B05

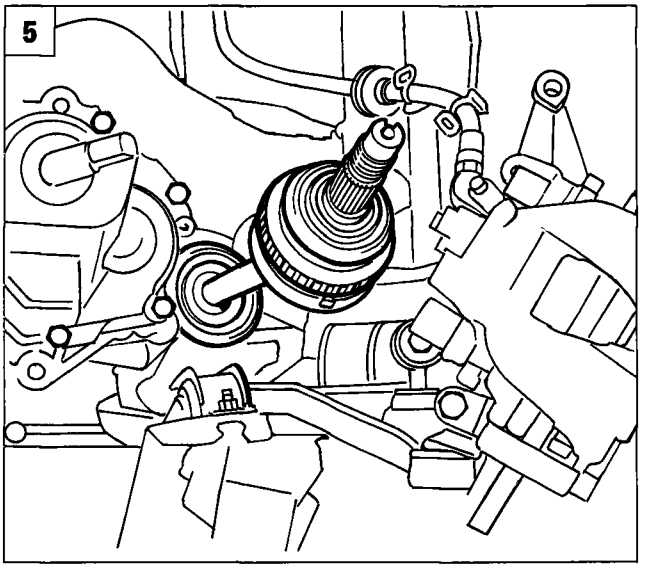

P4F025B01

21-27.

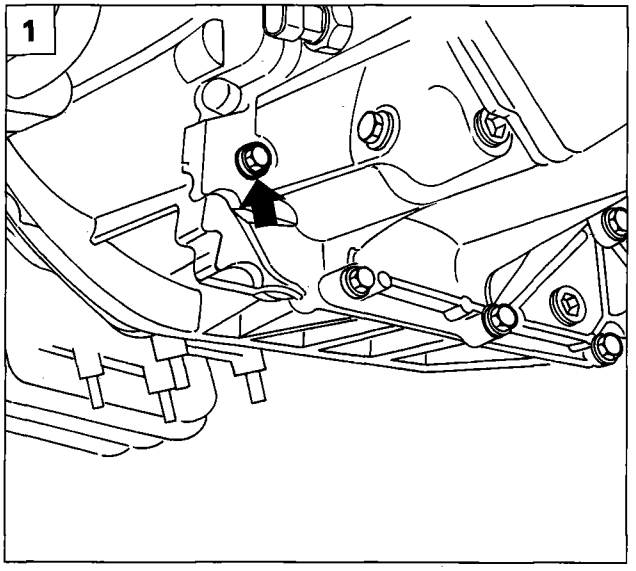

P4F026B01

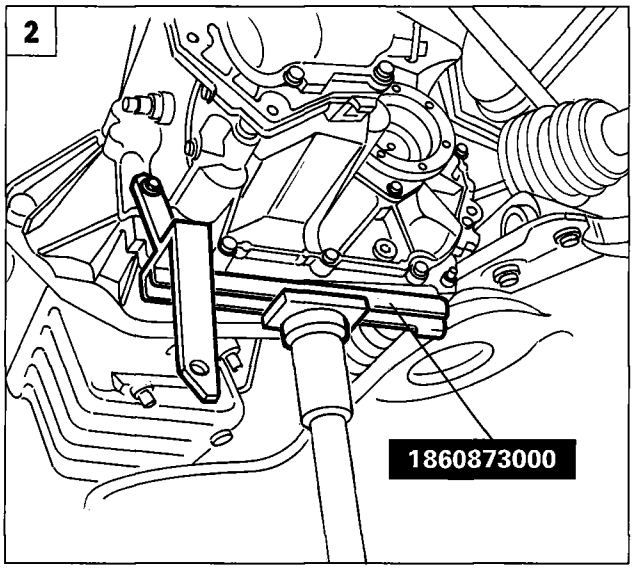

P4F007B02

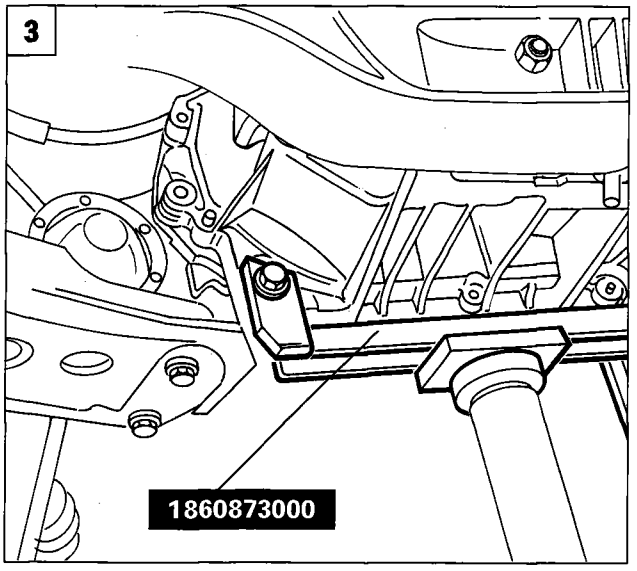

P4F007B03

1. Undo the bolt shown in the figure from the gearbox bellhousing, so as to fit the gearbox support tool.

2-3. Fit the gearbox support tool 1860873000 on the hydraulic jack, then secure it to the gearbox at the points shown in the figure.

4. Remove the power unit's central mounting by undoing the attachments shown in the figure.

5. Remove the guard shown in the figure from the bottom of the gearbox.

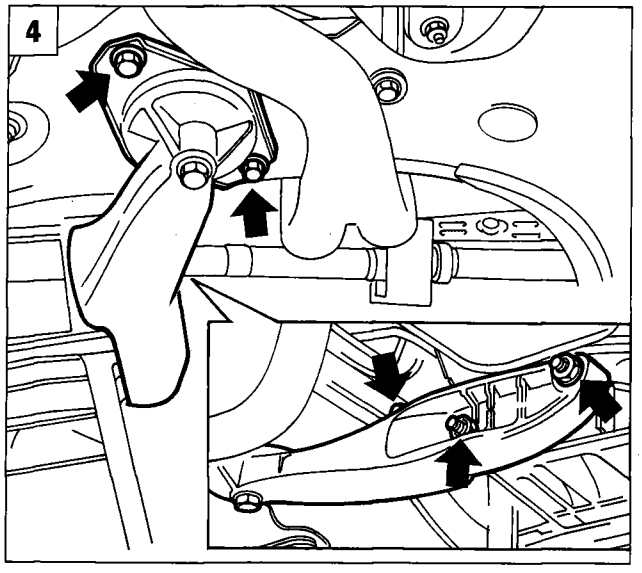

P4F026B02

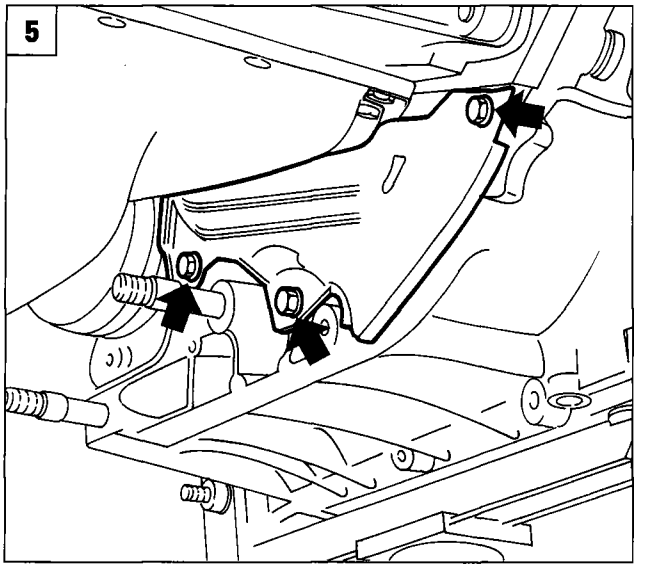

P4F026B03

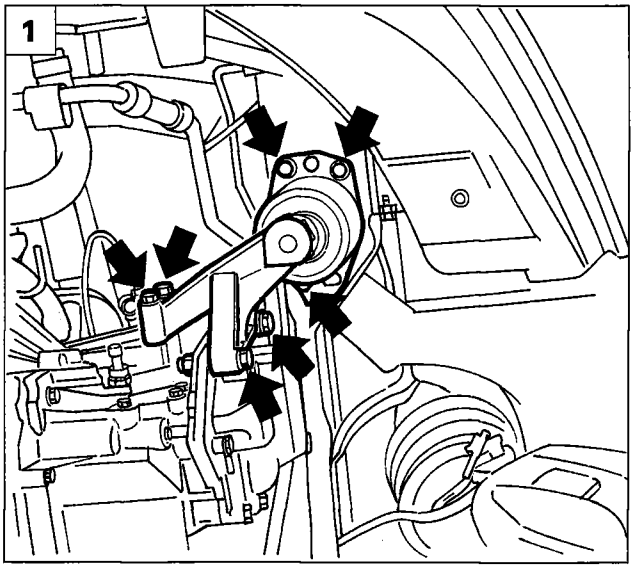

P4F027B01

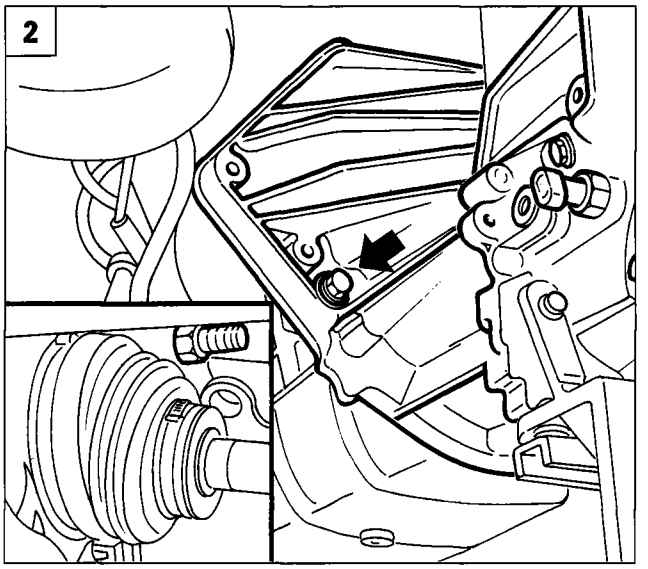

P4F027B02

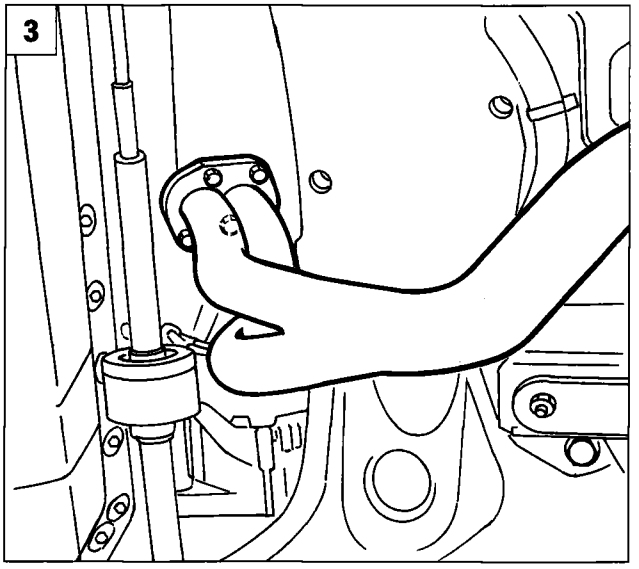

P4F027B03

1. Remove the engine mount, gearbox side.
2. Remove the bottom bolts securing the gearbox bellhousing to the engine block.
3. Remove the nuts securing the first section of the exhaust pipe to the manifold, to allow the power unit to move forwards and consequently facilitate removal of the gearbox. If it is still insufficient, disconnect the coolant inlet and outlet pipes from the heater.
4. Manoeuvre the hydraulic jack as appropriate so as to release the gearbox from the attachment pins and the surrounding parts. Gradually lower the jack and withdraw the gearbox complete with drive shafts.
5. If the gearbox is to be overhauled, drain the oil by undoing the plug indicated, and disconnect the two drive shafts, removing the dust excluder clips.

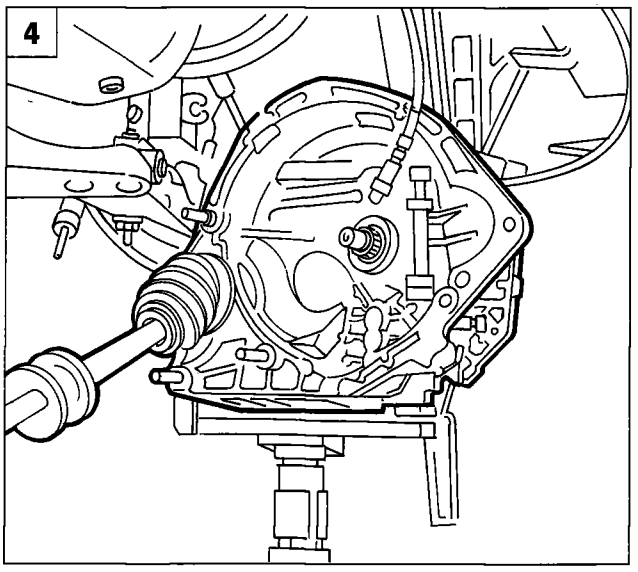

P4F027B04

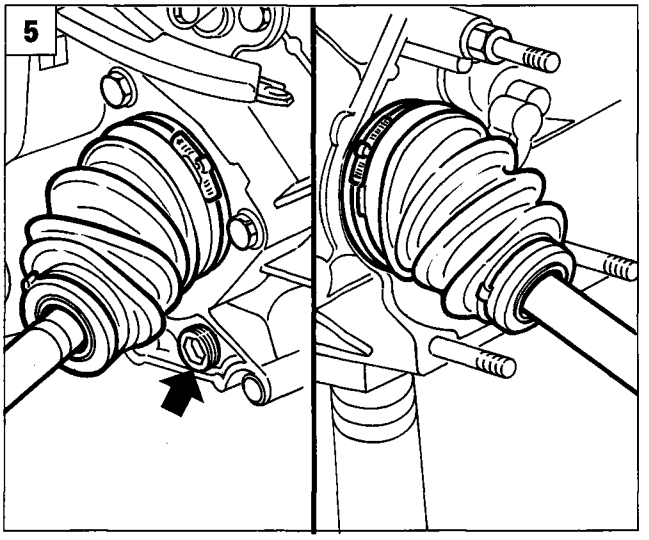

P4F027B05

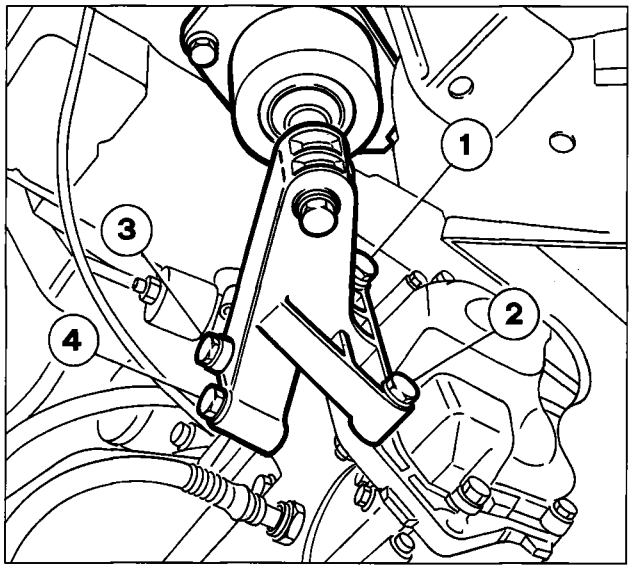

P4F028B01

Refitting

When fitting the engine mounting on the gearbox side, to prevent stresses being created on the sealing surfaces of the gearbox, resulting in deformation and subsequent oil leaks, closely adhere to the following sequence for tightening the bolts:

- Tighten the bolts (1) and (2) to a preliminary torque of 0.5 daNm;
- Tighten the bolts (3) and (4) to a preliminary torque of 0.5 daNm, then tighten to the specified torque;
- Tighten the bolts (1) and (2) to the specified torque.

For the remaining refitting operations, reverse the procedure described for removal. To fit the clutch release bearing and gearbox bellhousing in the car, refer to the refitting of the gearbox of the 1370 12v engine.

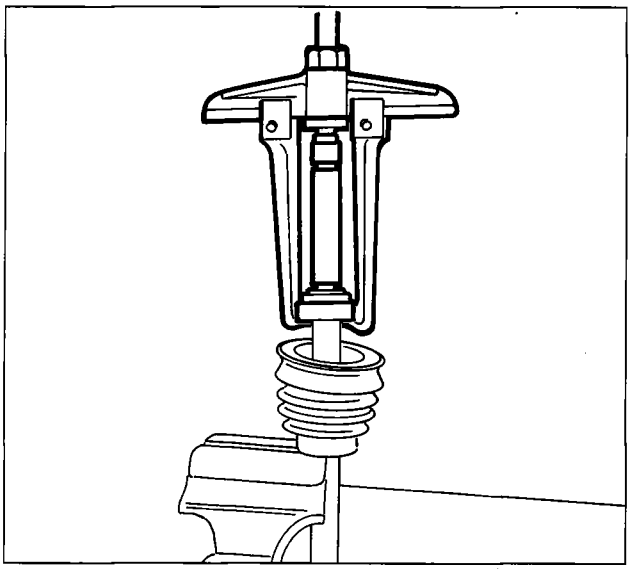

P4F028B02

REMOVING-REFITTING DRIVE SHAFTS

For remove-refit the drive shafts, refer to the procedure described for the 1370 12v, engine, with the difference that the drive shafts are attached to the gearbox-differential unit by means of retaining clips, and the tripod joint is inserted directly in the differential.

DISMANTLING

Refer to the dismantling of the drive shaft described for the 1370 12v engine, with the difference that on the 1581 engine, in the dust excluders on the gearbox side, fluid-tight ball bearings have been installed on the drive shafts to minimize oil leaks. Use the general-purpose puller to remove these bearings.

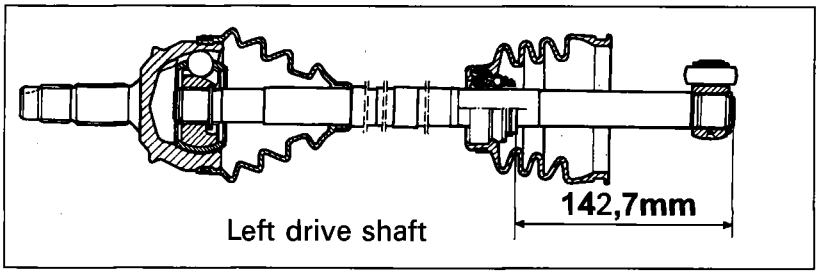

P4F028B03

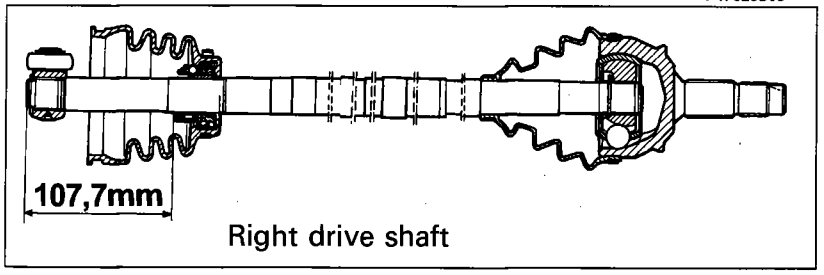

P4F028B04

The damper weight is supplied as a spare part incorporated with the drive shaft, so it must not be dismantled.

REFITTING

Reverse the procedure described for removal. To refit the differential case oil sealing bearing, refer to the following description.

Fitting differential oil sealing bearing.

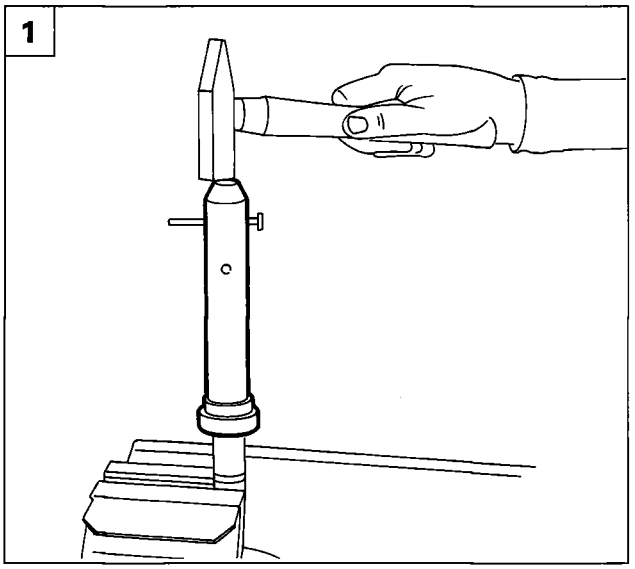

P4F029B01

NOTE *To refit the constant velocity joint on the wheel side, connect it to the green category 2 or white category 3 plined shaft.*

1. Fit and position the sealing bearing, for the differential casing oil sealing gaiter, using a suitable drift.

WIRING DIAGRAM OF GEAR SELECTOR LINKAGE

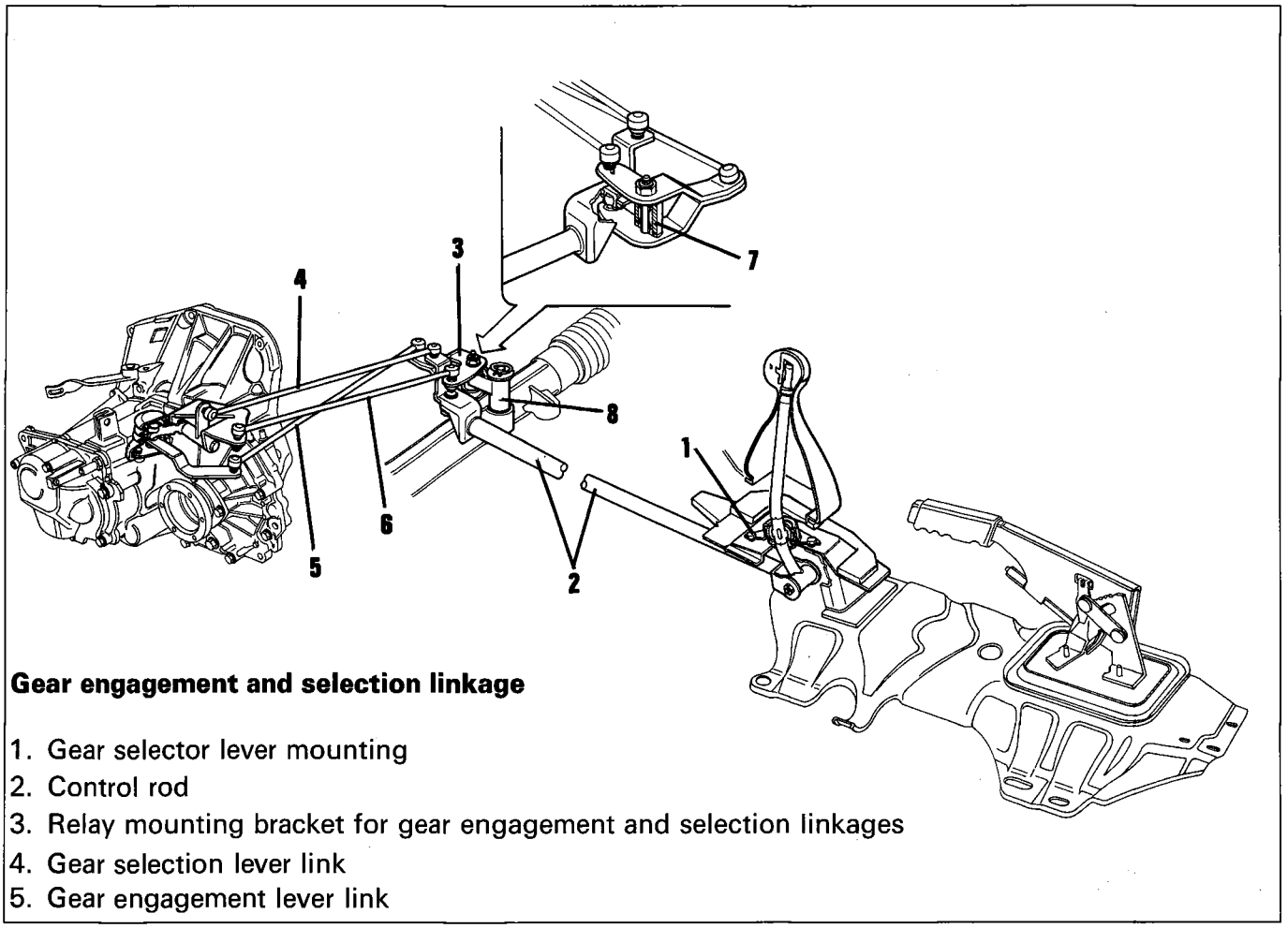

Gear engagement and selection linkage

1. Gear selector lever mounting
2. Control rod
3. Relay mounting bracket for gear engagement and selection linkages
4. Gear selection lever link
5. Gear engagement lever link
6. Reaction link
7. Bearings
8. Pin securing relay mounting bracket for gear engagement and selection linkages

P4F029B02

21-27.

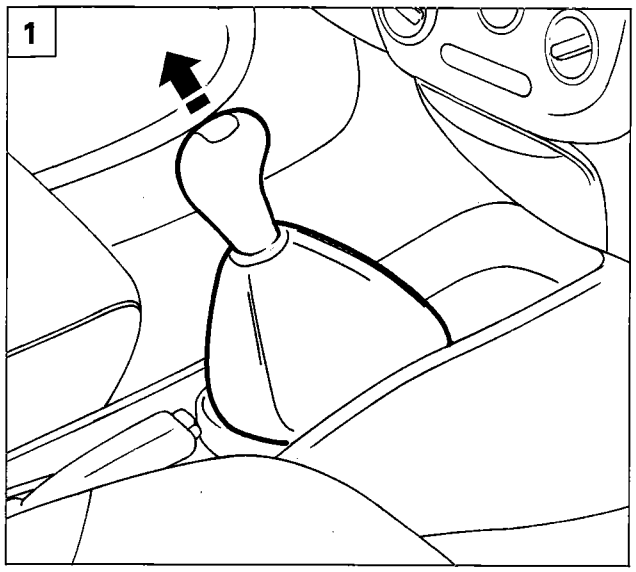

P4F015B01

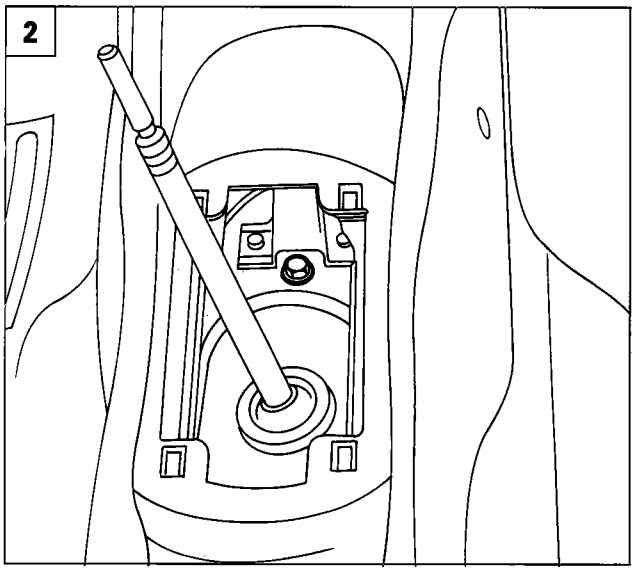

P4F030B01

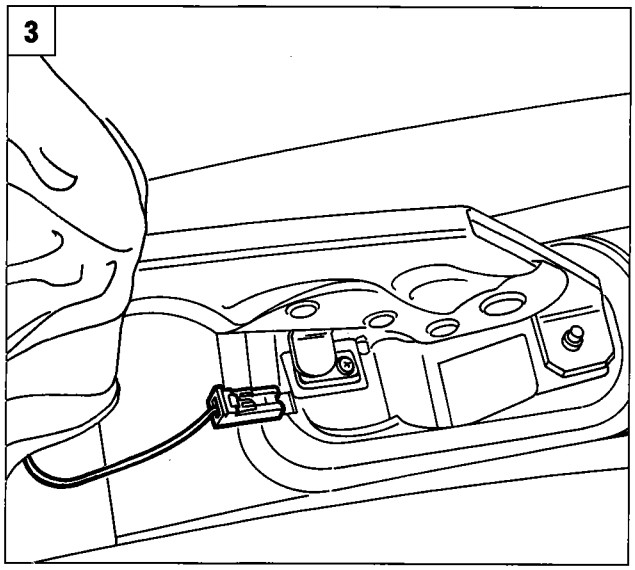

P4F015B02

REMOVING - REFITTING

Disconnect the battery's negative pole, and remove the gear selector linkage as follows:

1. Remove the gear lever trim from inside the car, without removing the gear lever knob.
2. Undo the bolt securing the gear selector linkage mounting to the body shell.
3. Remove the handbrake protective gaiter, then disconnect the wiring connection underneath.
4. Raise the ramps and disconnect the Lambda probe wiring connection.
5. Disconnect the handbrake cables from their mounting and disengage them from the bracket.

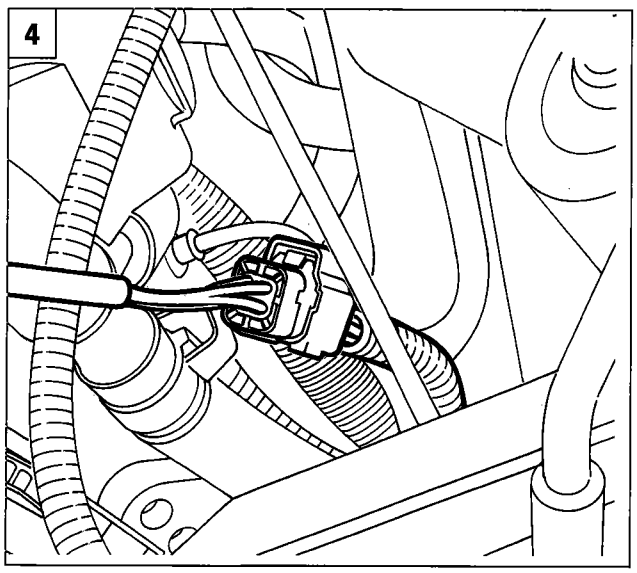

P4F030B02

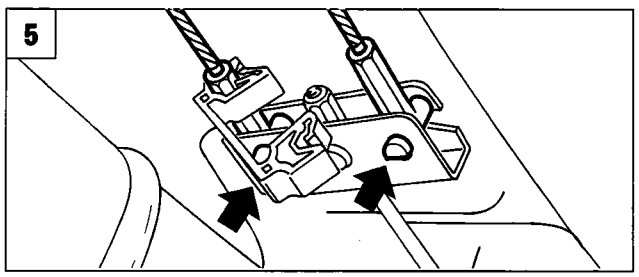

P4F016B01

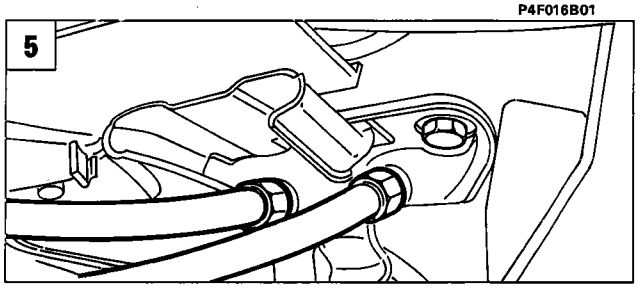

P4F016B02

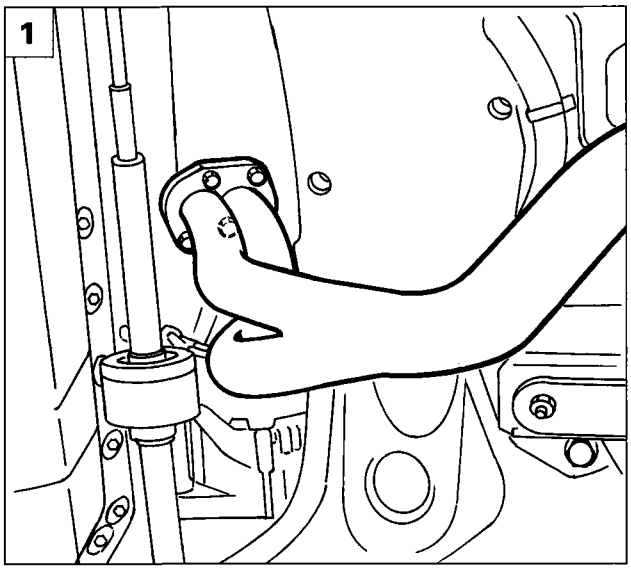

P4F027B03

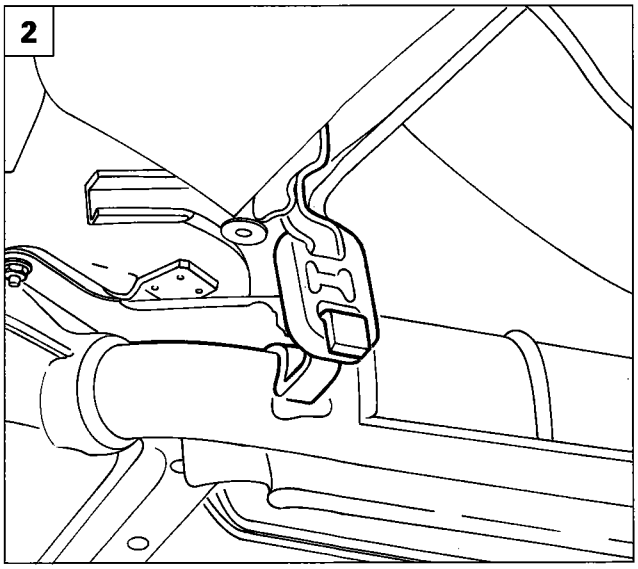

P4F016B03

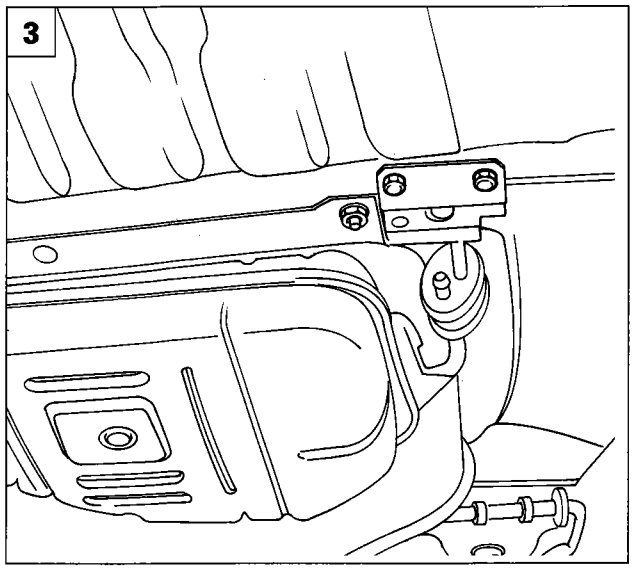

P4F016B04

1. Disconnect the Lambda probe wiring connector and disconnect the first section of the exhaust pipe from the front attachments.
2. Disengage the exhaust pipe from the rubber mount indicated.
3. Undo the bolts securing the exhaust pipe front mounting bracket.
4. Undo the bolts securing the exhaust pipe rear bracket, then remove it from the car.
5. Remove the heat shield by undoing the attachments illustrated.

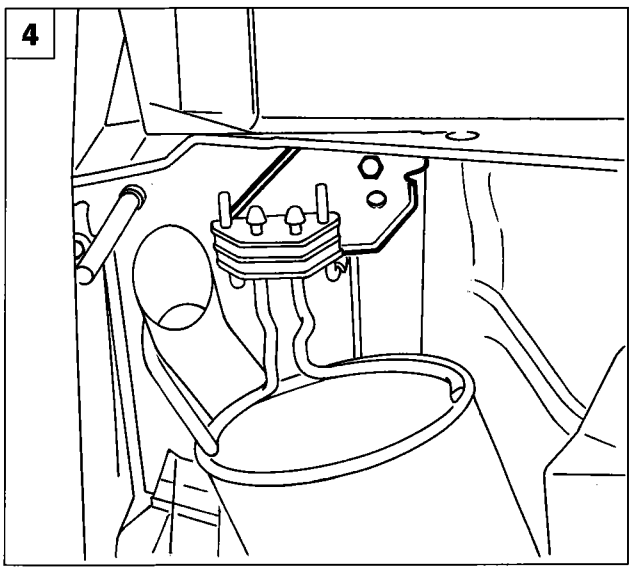

PFA017B01

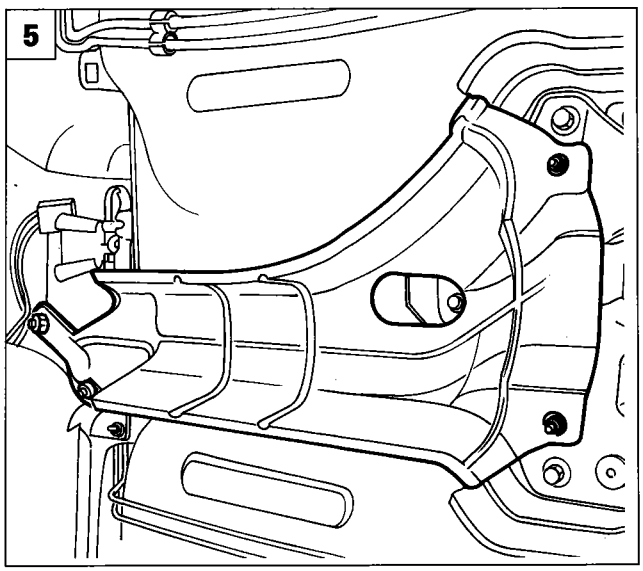

P4F017B02

Copyright Fiat Auto

21-27.

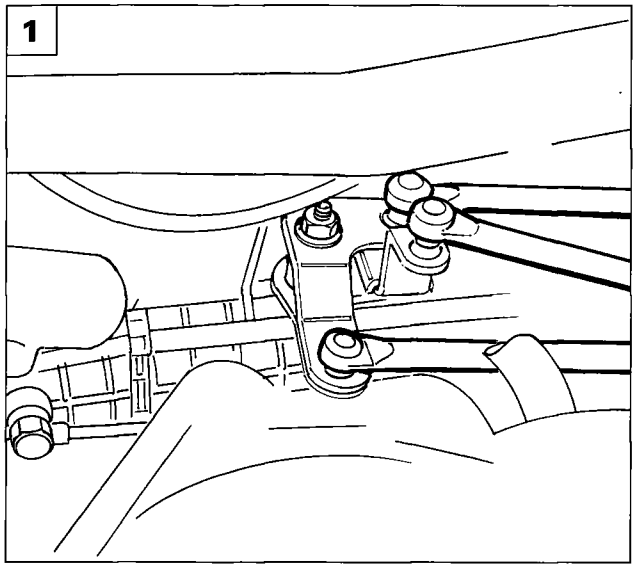

P4F032B01

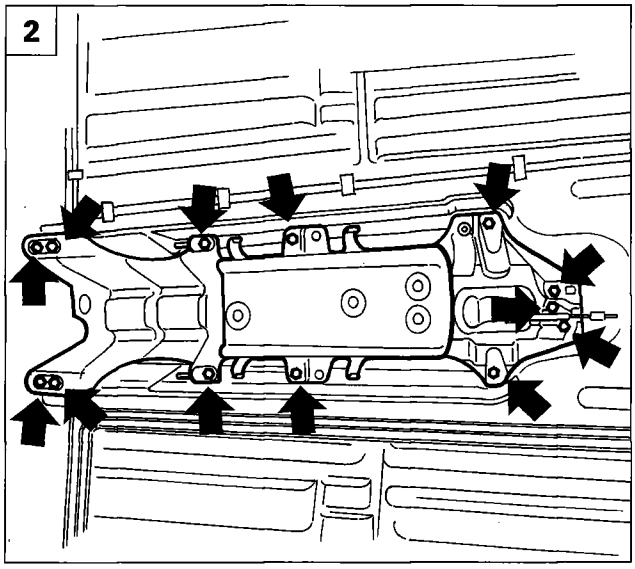

P4F017B03

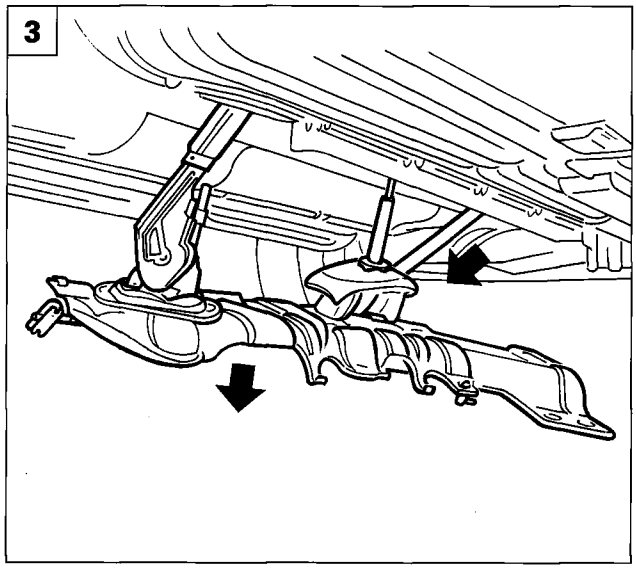

P4F032B02

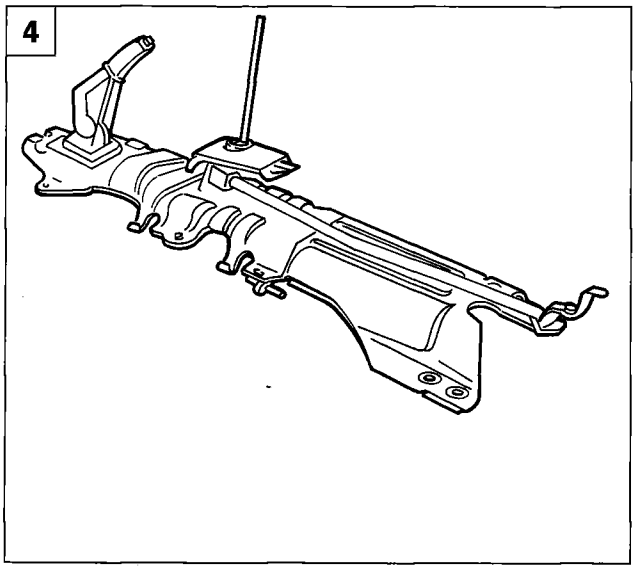

P4F032B03

1. Disconnect the gear engagement and selection links and the reaction link, then undo the nut and disconnect the relay assembly from the control shaft.

2. Undo the bolts securing the gear selector linkage and handbrake mounting to the body shell.

3. Withdraw the control shaft from the engine compartment then remove the external gear selector linkage assembly.

4. Internal gear selector linkage assembly.

DISMANTLING AT THE BENCH

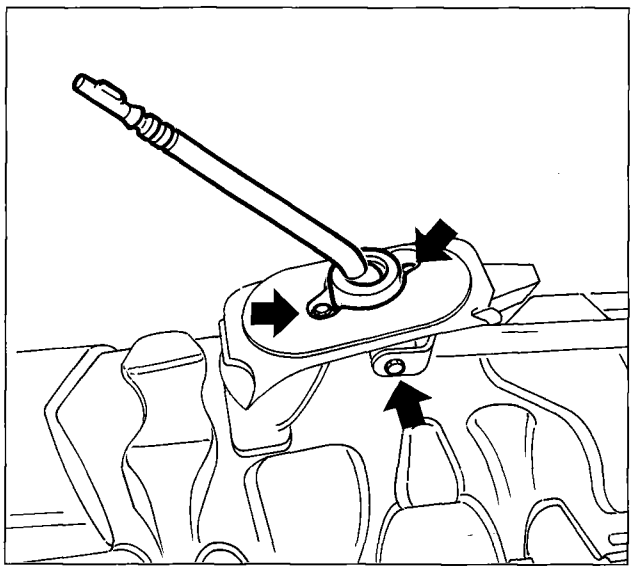

P4F033B01

Dismantling - refitting gear lever

- Undo the bolts securing the gear lever to the mounting and the bolt securing the control rod to the gear lever, then remove the lever from the assembly.

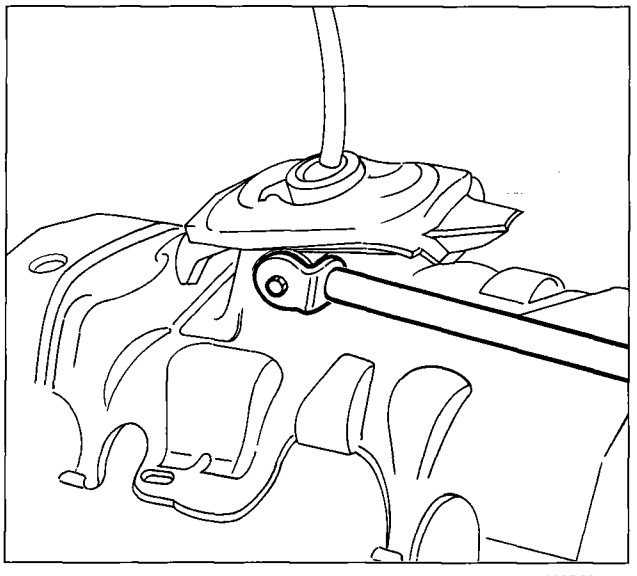

P4F033B02

Dismantling - refitting control rod

- Undo the bolt securing it to the gear lever, then remove the control lever from the assembly.

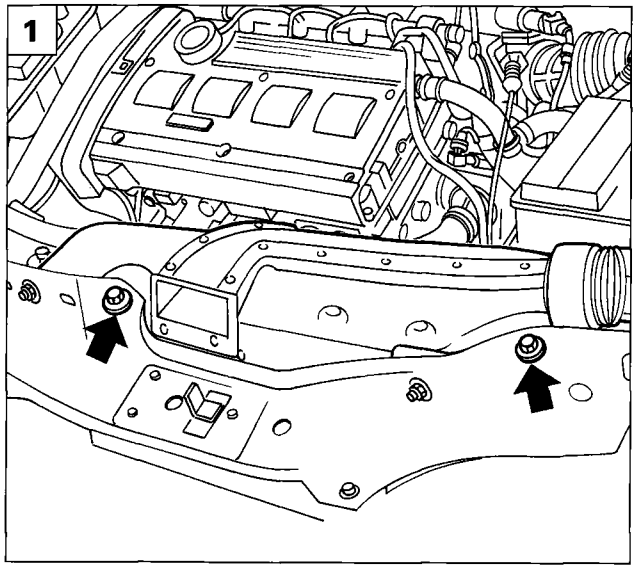

P4F034B01

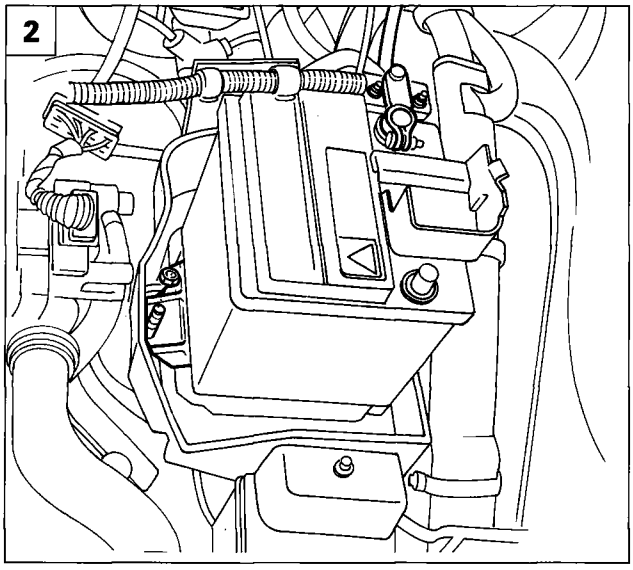

P4F001B02

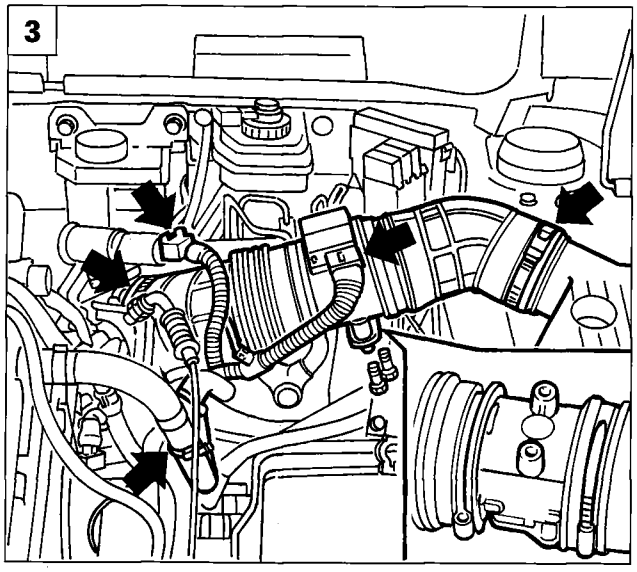

P4F034B02

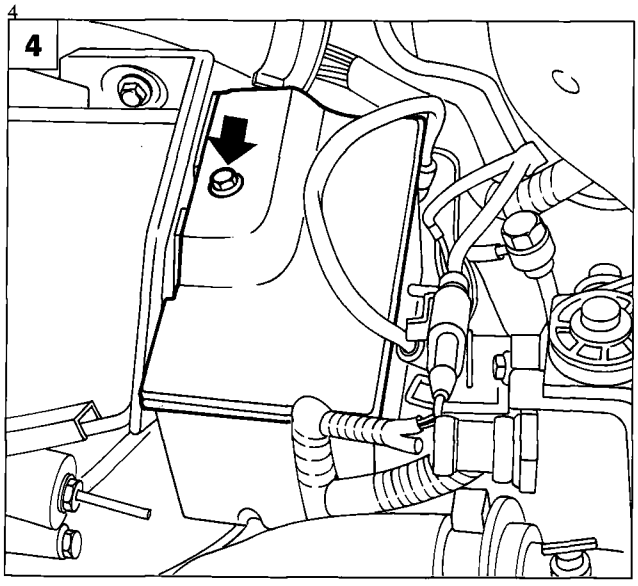

P4F020B04

REMOVING - REFITTING

Removing

Place the car on ramps, disconnect the battery's negative cable and remove the front wheels.

1. Remove the air intake duct by undoing the attachments illustrated.
2. Lift the protective cover on the positive pole, disconnect the positive pole, then undo the nut securing the battery to the cage and remove it.
3. Disconnect the wiring connections indicated, undo the bolts securing it to the bracket, then remove the complete air intake duct.
4. Undo the bolt indicated and remove the cover from the relay box.

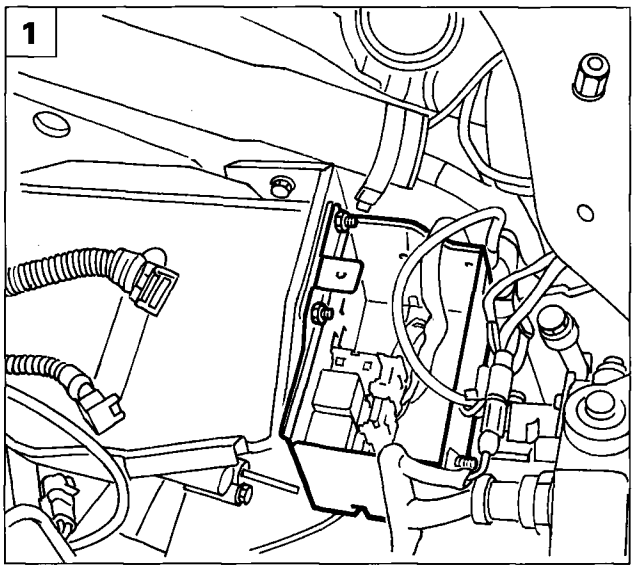

P4F035B01

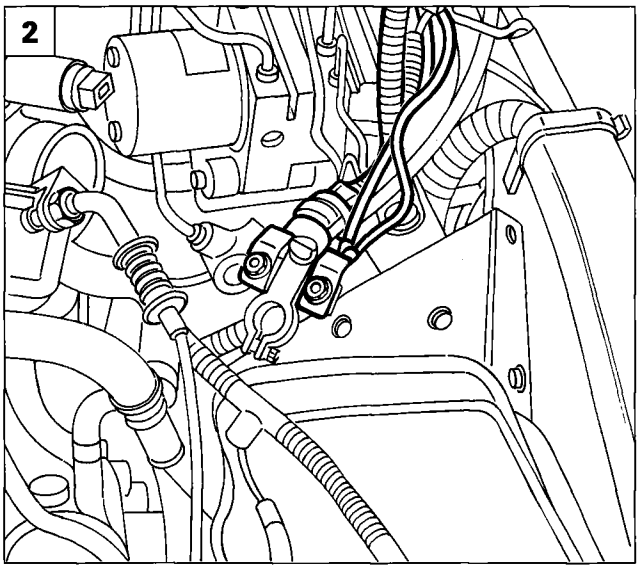

P4F035B02

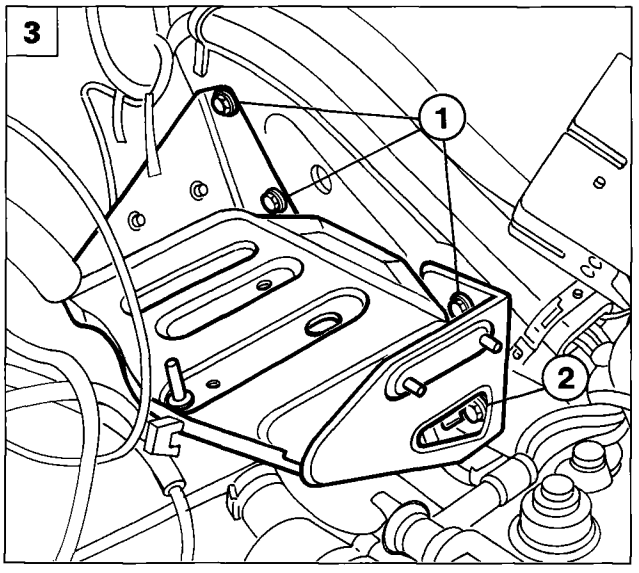

P4F021B03

1. Undo the bolts securing the relay box to the battery cage, then move it to one side.
2. Disconnect the cables indicated from the wiring of the battery's positive pole.
3. Remove the bolts (1) and slacken the bolt (2) securing the battery cage to the body shell. Before removing the cage, disconnect the cable retaining clip underneath.
4. Disconnect the clutch cable by undoing the nut (1) and locknut (2) shown in the figure. Also disconnect the earth cable (3) from the gearbox and the electrical connector of the reversing lights switch (4).
5. Disconnect the reaction link.

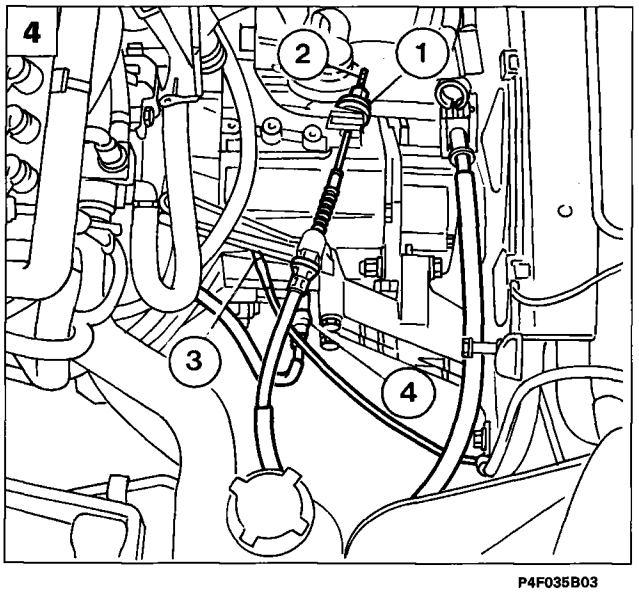

P4F035B03

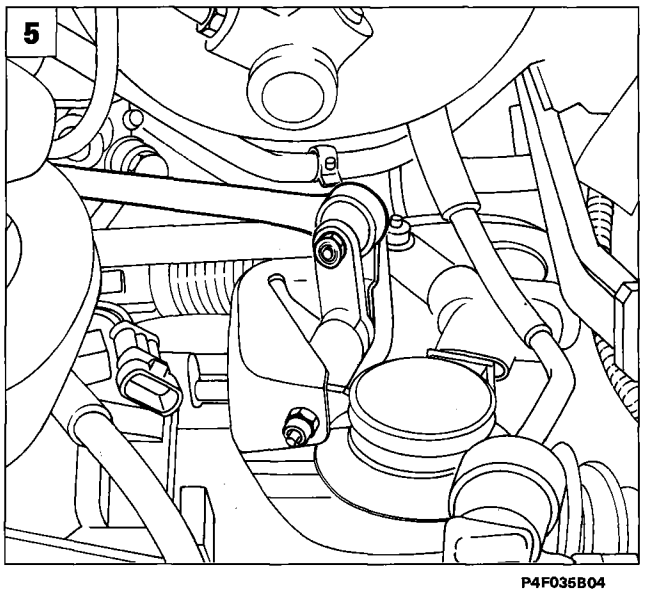

P4F035B04

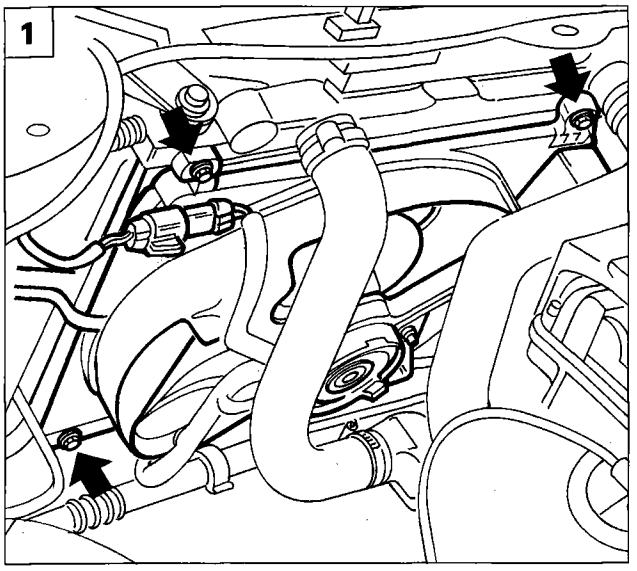

P4F036B01

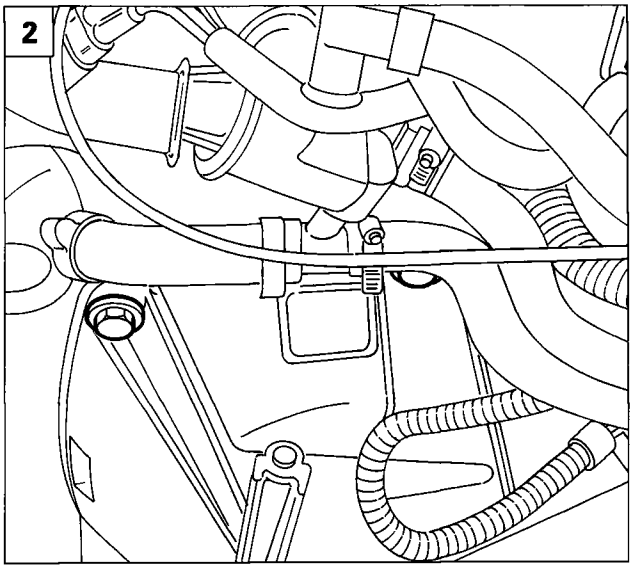

P4F036B02

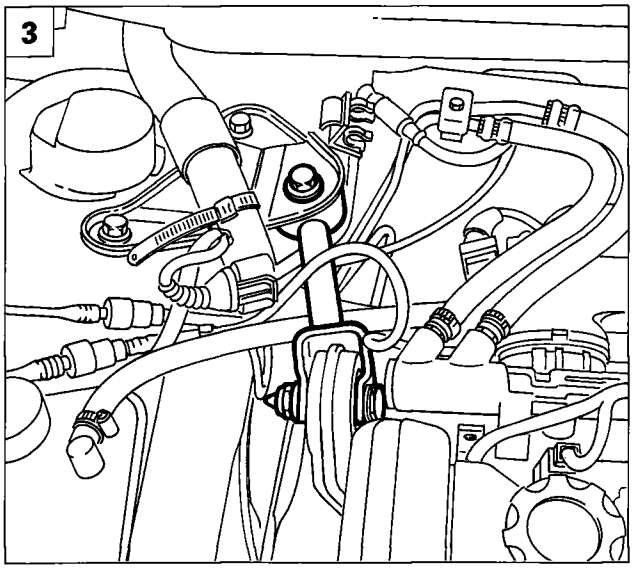

P4F036B03

1. Disconnect the electric fan's supply connector. Undo the screws connecting the fan to the radiator, then remove it from the car.
2. Undo the top bolts securing the gearbox to the power unit.
3. Remove the engine reaction link.
4. Remove the windscreen wiper arms by undoing the nuts.
5. Remove the anti-pollen filter guard.

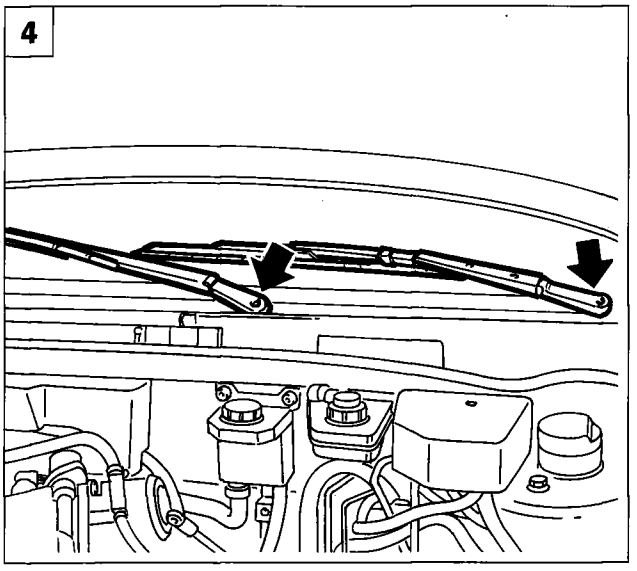

P4F54AB02

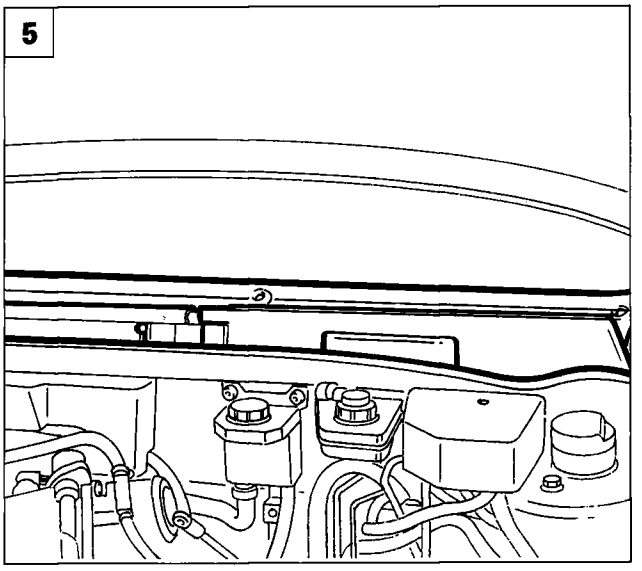

P4F54AB03

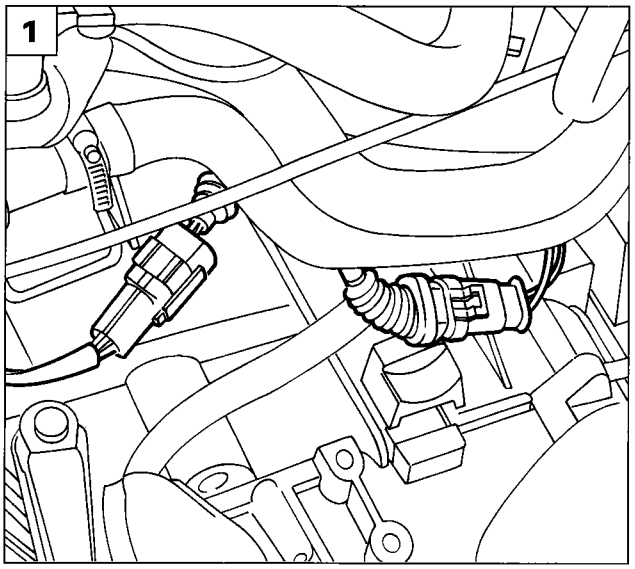

P4F037B01

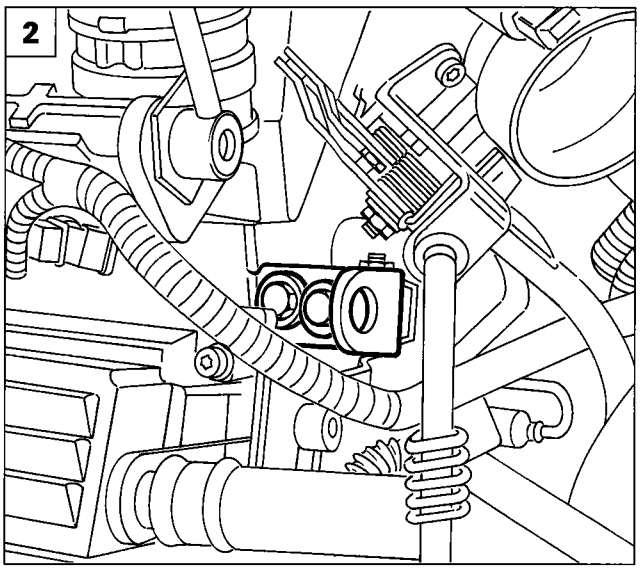

P4F037B02

1. Disconnect the speedometer signal electrical connector and the Lambda probe connector.
2. Fit a suitable support eyelet, securing it by means of two service bolts, to permit correct hooking up of the power unit support crossbeam.
3. Fit the engine support crossbeam 1860851000 and adaptor 1860851001 in the special support points.

a. Front support: position the tool in the safety catch seating so that it rests on the front subframe.

b. Rear support: position the tool at the central reinforcement of the flame-proof bulkhead.

c. Attach the crossbeam hook to the bracket fitted previously.

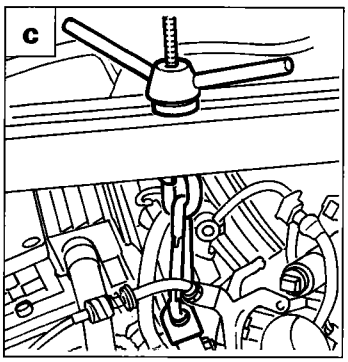

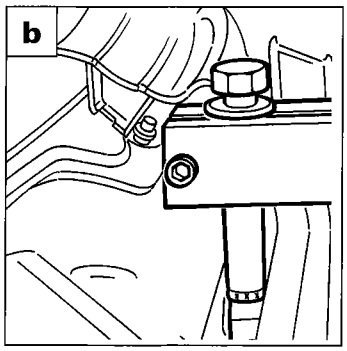

P4F006B05

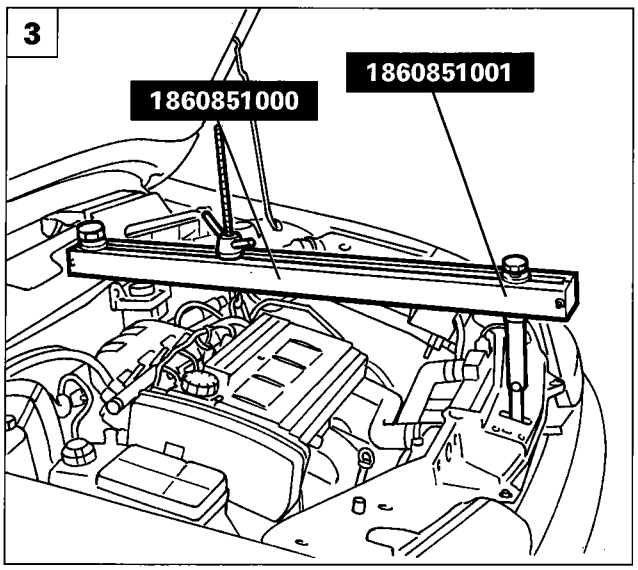

P4F037B03

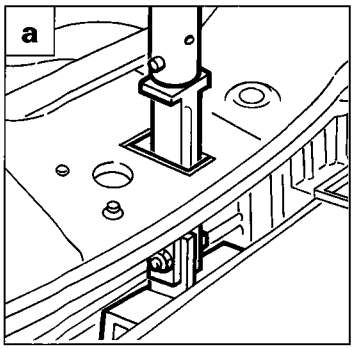

P4F006B06

21-27.

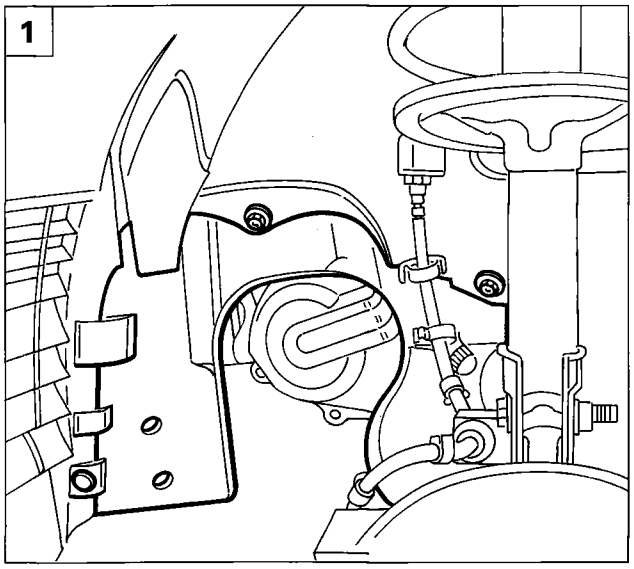

P4F003B02

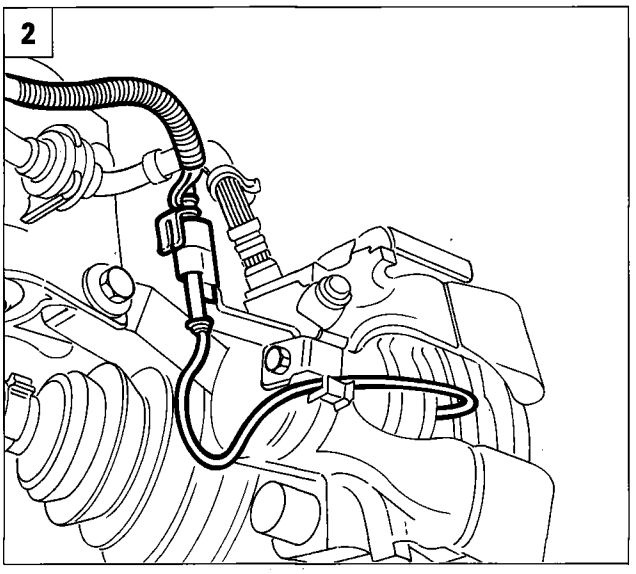

P4F038B01

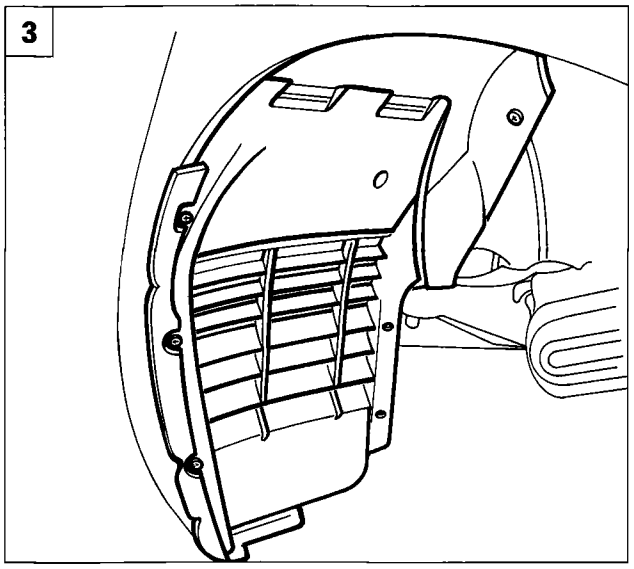

P4F003B03

1. Using tool 1878077000, remove the button securing the dust shield to the body shell, then undo the bolts and release the dust shield from its seating.
2. Disconnect the brake pad wear sensor connection and withdraw the central dust shield from the car.
3. Remove the front dust shield by undoing the attachments illustrated.
4. Undo the nuts securing the tie rod end balljoint head, then using tool 1847038000 disconnect it from the vertical link.
5. Undo the bolts securing the vertical link, then remove the latter.

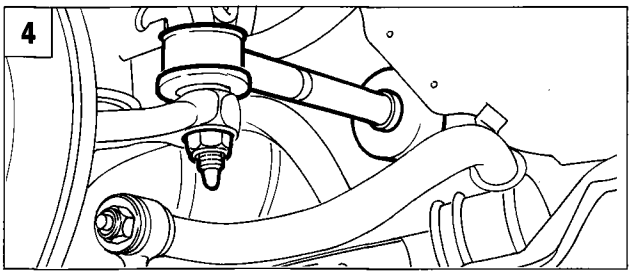

P4F002B05

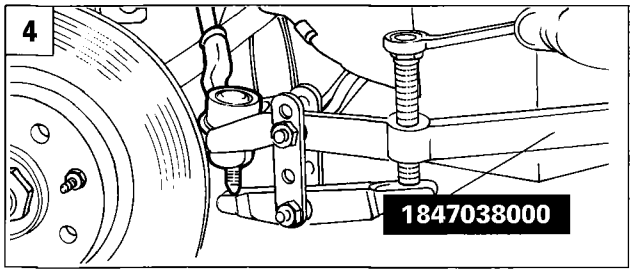

P4F002B06

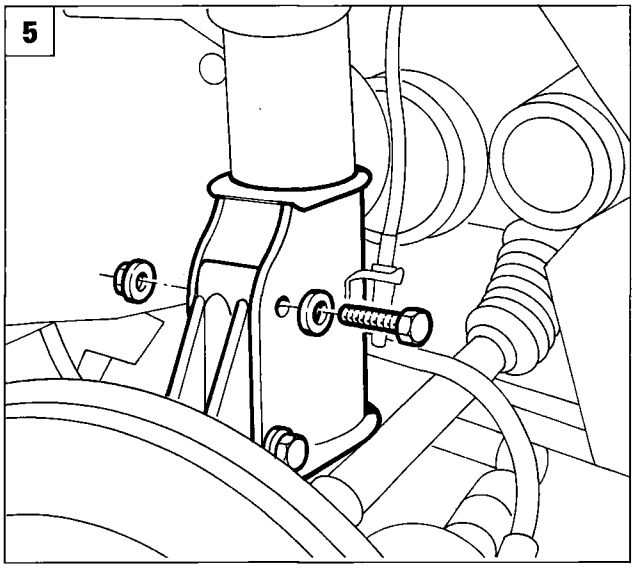

P4F003B05

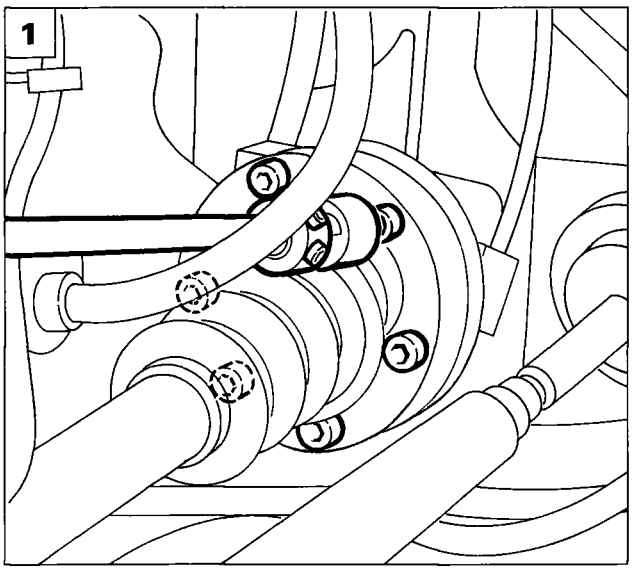

P4F039B01

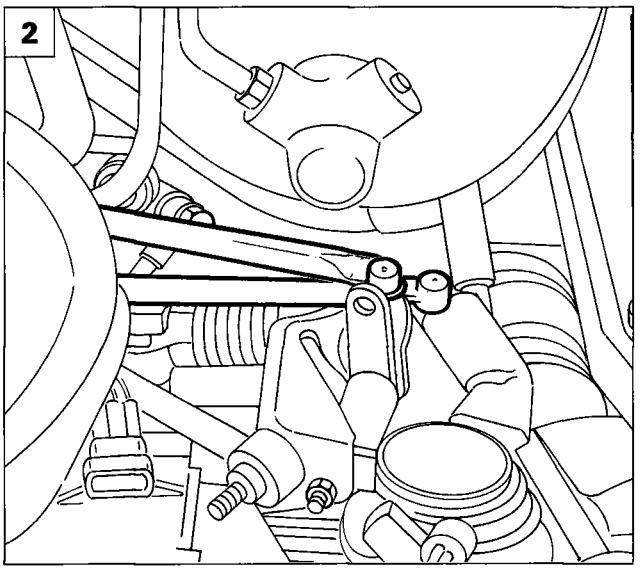

P4F022B01

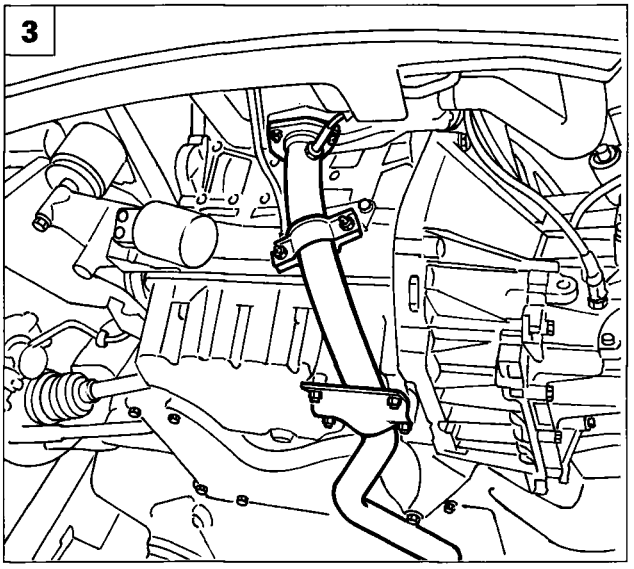

P4F039B02

1. Disconnect the drive shaft by undoing the bolts securing the constant velocity joint to the gearbox flange.

Operations to be repeated on the other side

2. Disconnect the gear engagement and selection levers from the gearbox.
3. Raise the car and remove the attachments illustrated on the first section of the exhaust pipe.
4. Remove the rear attachments and remove the first section of the exhaust pipe from the car.
5. Remove the bracket indicated to permit insertion of the wrench and removal of the bolt securing the gearbox to the power unit.

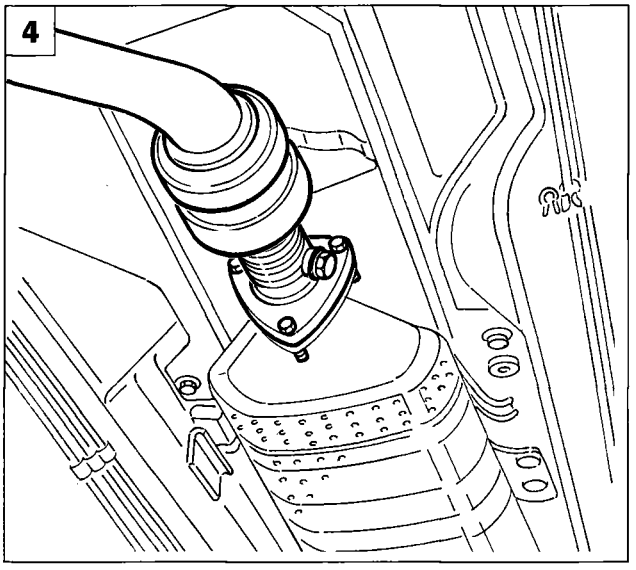

P4F004B04

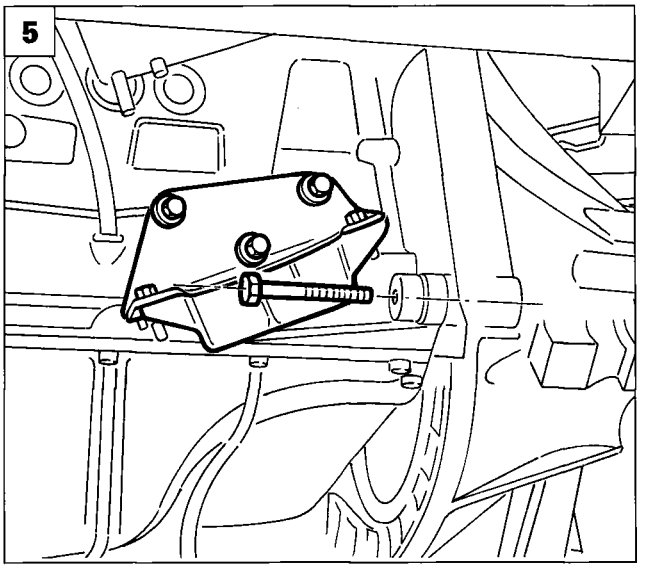

P4F005B04

21-27.

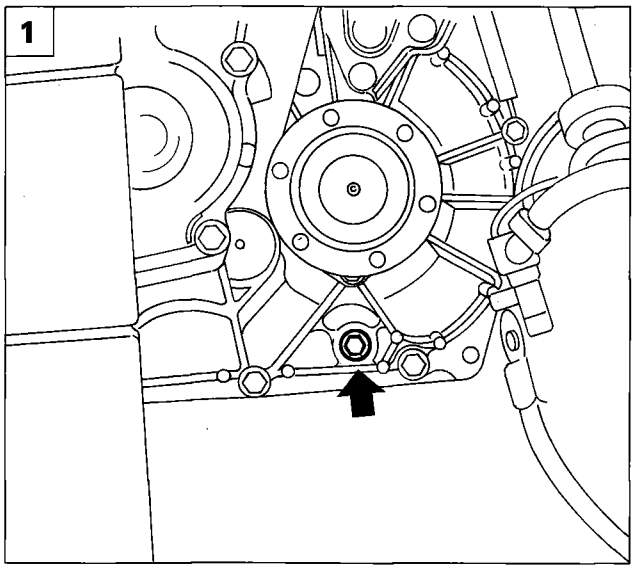

P4F040B01

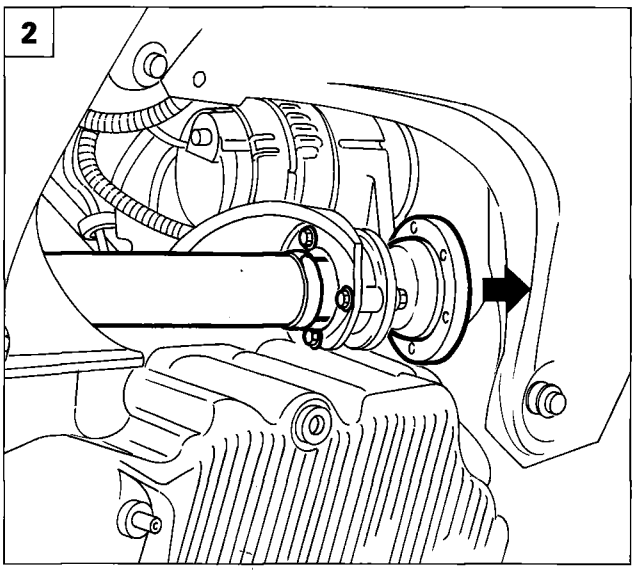

P4F040B02

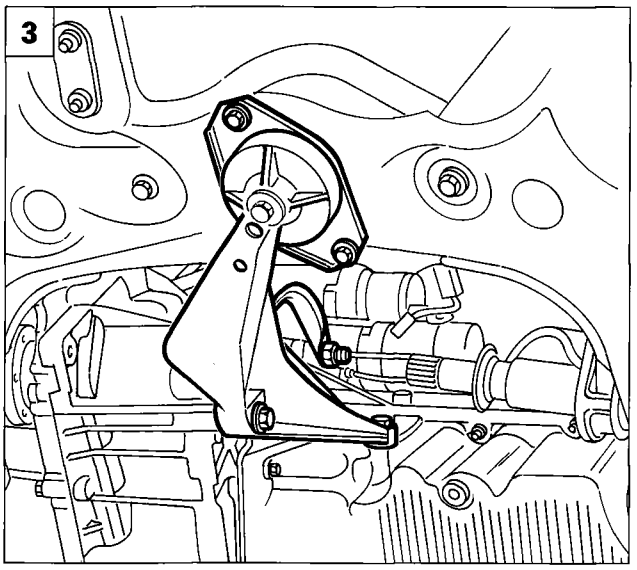

P4F040B03

1. Drain the gearbox oil by undoing the bolt indicated.
2. Undo the bolts securing the intermediate shaft to the engine, release it from the gearbox, move it away from the working area and secure it as appropriate.
3. Disconnect the power unit central mounting.
4. Disconnect the power unit mounting on the gearbox side.
5. Lower the car and manoeuvre the power unit so that it can make the maximum possible travel towards the front of the engine compartment.

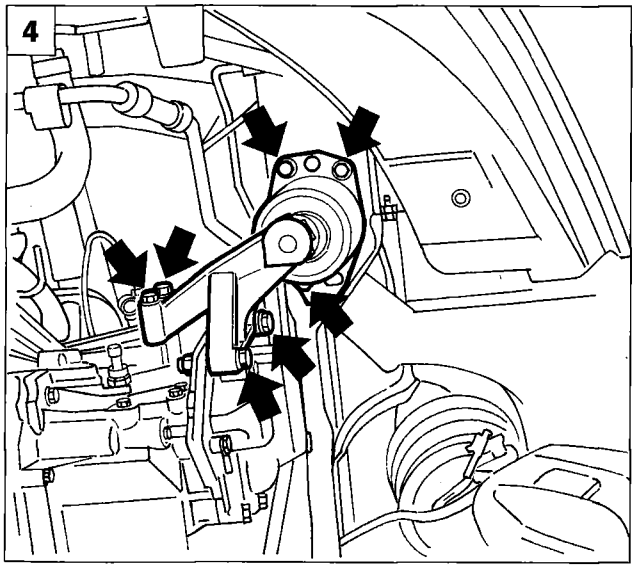

P4F027B01

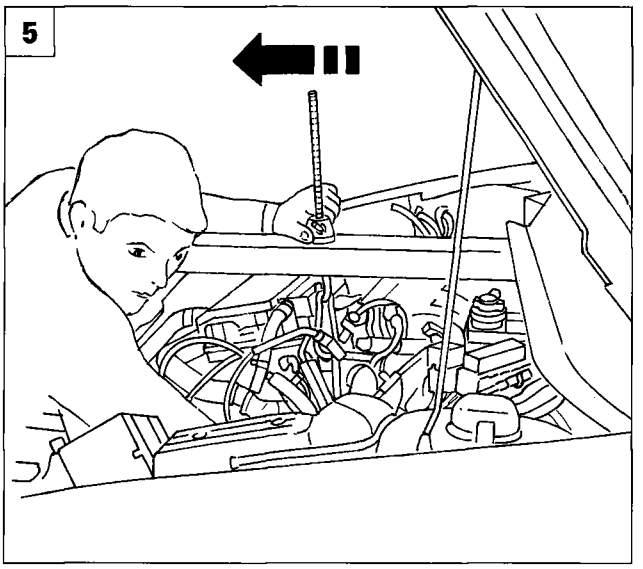

P4F040B04

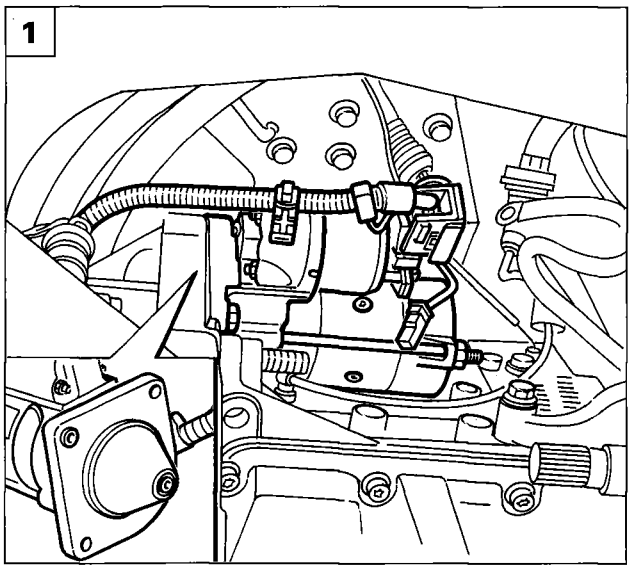

P4F041B01

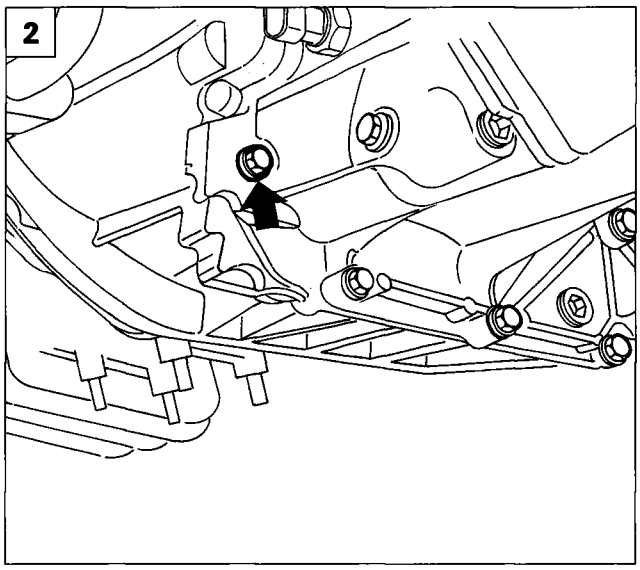

P4F026B01

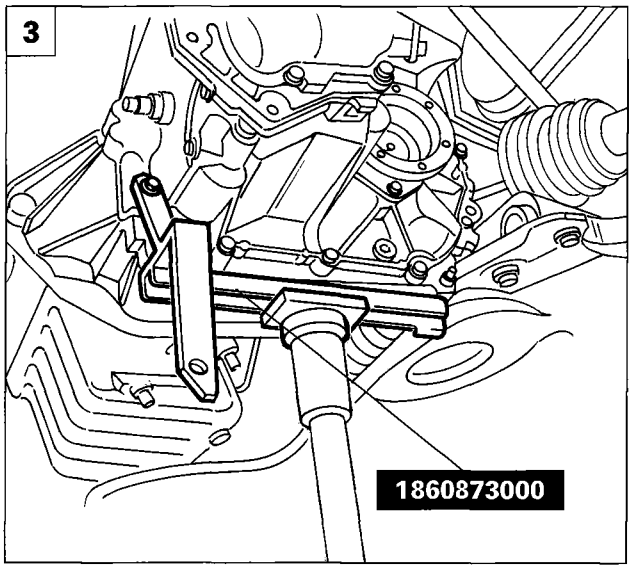

P4F007B02

1. Raise the ramps and remove the starter motor complete with wiring.

2. Undo the bolt illustrated securing the gearbox to the power unit and undo the gearbox bolt illustrated, in order to secure the support tool for removing the gearbox - differential unit.

3.4 Fit the tool 1860873000 for handling the gearbox-differential unit.

5. Undo the rear bolts securing the gearbox to the power unit.

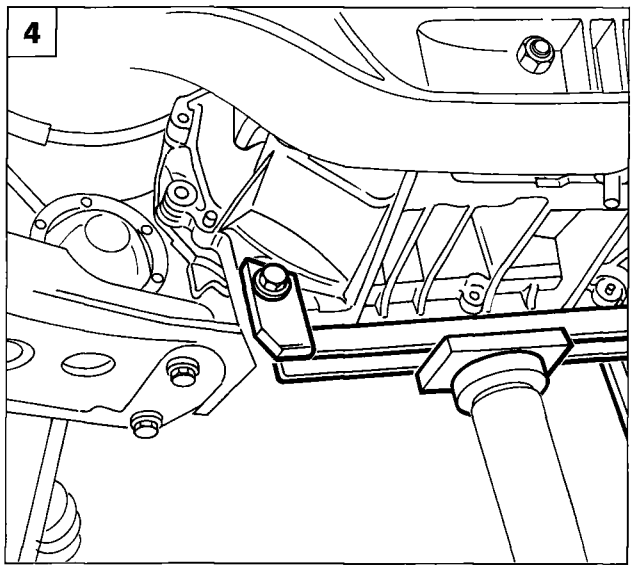

P4F007B03

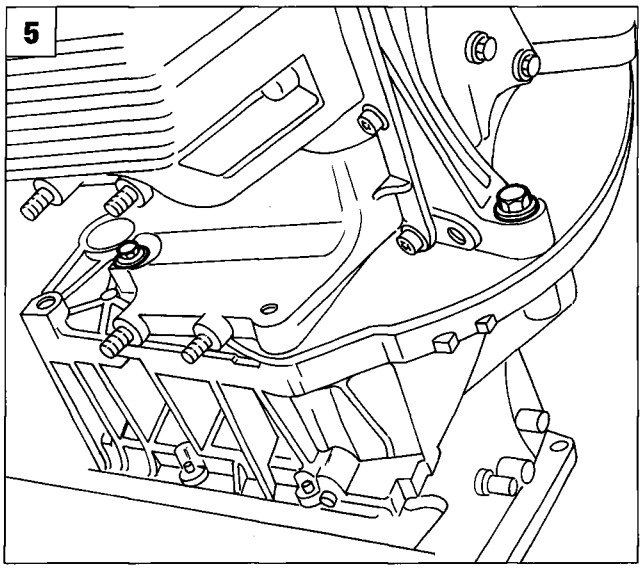

P4F041B03

Copyright Fiat Auto

21-27.

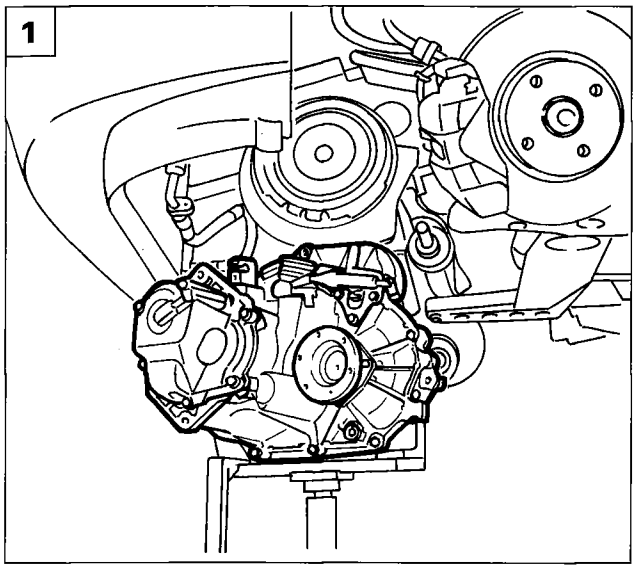

P4F008B01

1. Manoeuvre the hydraulic jack as appropriate in order to withdraw the gearbox from the centring pins, then withdraw it from the engine compartment by slowly lowering the hydraulic jack.

Refitting

2. When refitting the engine mounting on the gearbox side, to avoid stresses on the gearbox sealing surfaces, resulting in deformation and subsequent oil leaks, closely observe the following bolt tightening sequence:

   - Tighten the bolts (1) and (2) to a torque of 0.5 daNm;
   - Tighten the bolts (3) and (4) to a torque of 0.5 daNm, then tighten to the specified torque;
   - Tighten the bolts (1) and (2) to the specified torque.

To refit, reverse the procedure described for removal.

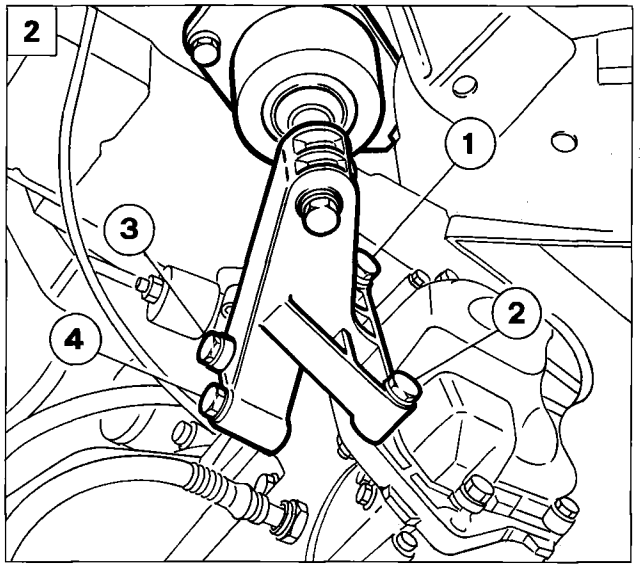

P4F042B01

REMOVING - REFITTING DRIVE SHAFTS

Place the car on ramps, disconnect the battery's positive pole and remove the front wheels, then carry out the following operations:

3. Disconnect the drive shaft by undoing the attachments illustrated.
4. Withdraw the drive shaft from the wheel hub and withdraw it from the engine bay.

NOTE *When refitting, reverse the procedure for removal, tightening the wheel hub nut to the specified torque.*

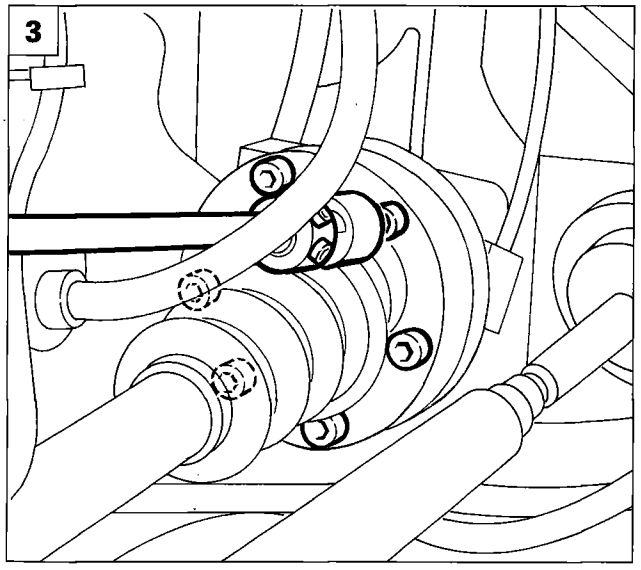

P4F042B02

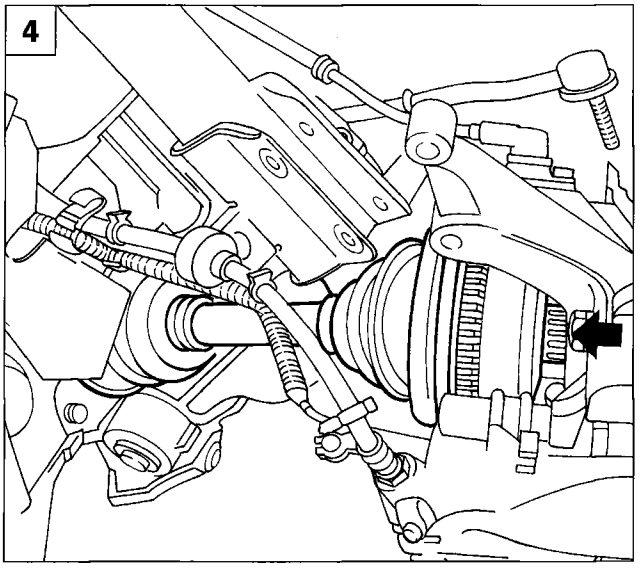

P4F042B03

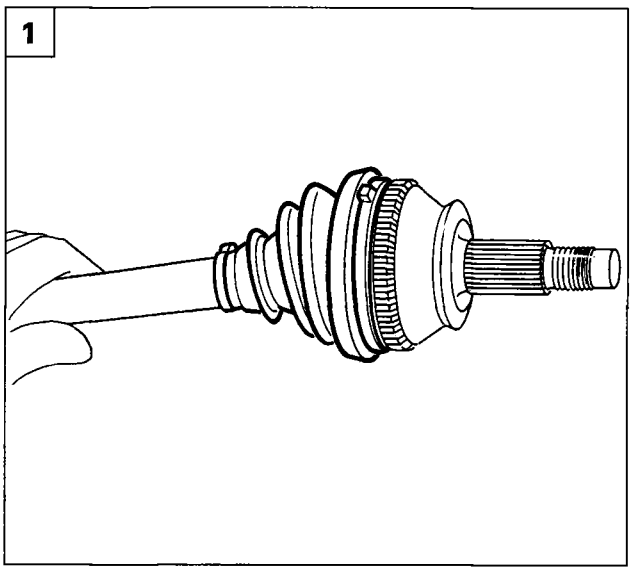

P4F043B01

DISMANTLING

1. Remove the clip and and remove the dust excluder on the constant velocity joint on the wheel side.

It is advisable to fit a new dust excluder.

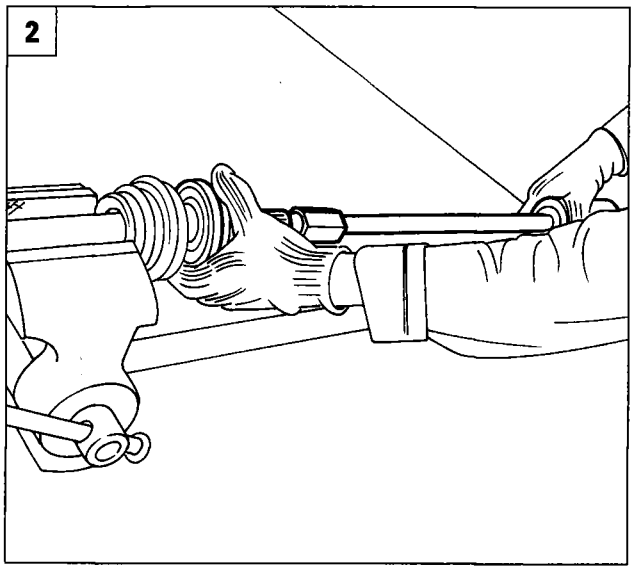

P4F043B02

2. Clean the grease off the inside of the constant velocity joint, and using tools 1847017001 and 1860889000, remove the constant velocity joint and then withdraw the dust excluder, previously moved aside, from the drive shaft.

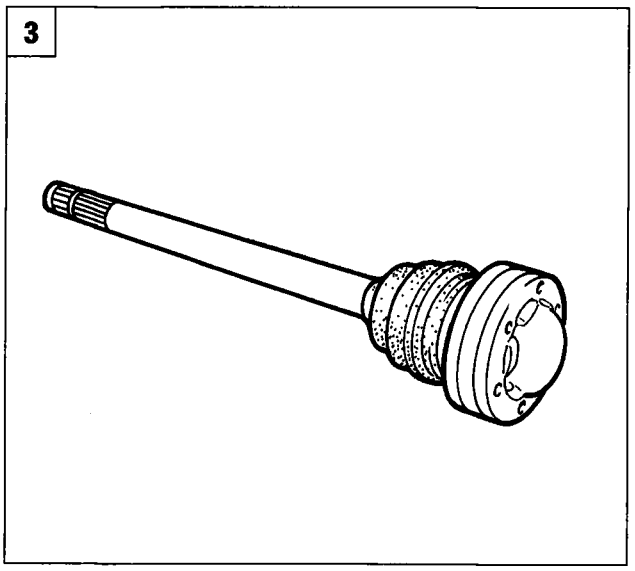

P4F043B03

3. Check that the drive shaft is not deformed or out of true, and that the surface in contact with the seal is not worn.

Copyright Fiat Auto

21-27.

1

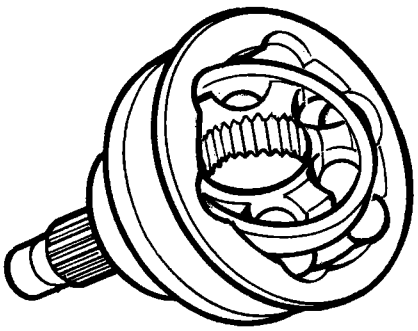

P4F044B01

REFITTING

1. Thoroughly wash the constant velocity joints with diesel or petrol and visually check that the balls and their seatings are perfectly specular and with no signs of seizure or scoring.

After carrying out the following checks, refit the parts in reverse order to dismantling.

If the dust excluder is removed, it is advisable to fit a new one, and it is important to fill both the constant velocity joint and the dust excluder with TUTELA MRM2.

2

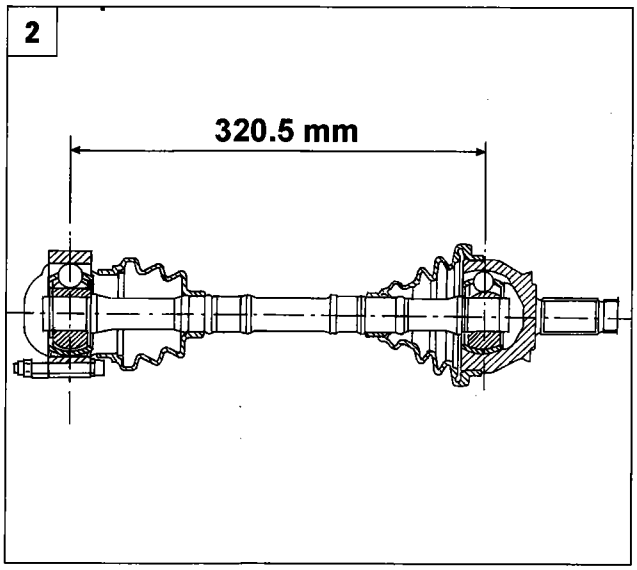

P4F044B02

NOTE When refitting the constant velocity joint, wheel side, connect it to a green category 2 or white category 3 splined shaft.

2. Overall view of drive shaft - constant velocity joints

The constant velocity joint on the gearbox side is supplied as a spare part with the drive shaft, so it must not be dismantled or overhauled.

Components of the transmission of drive

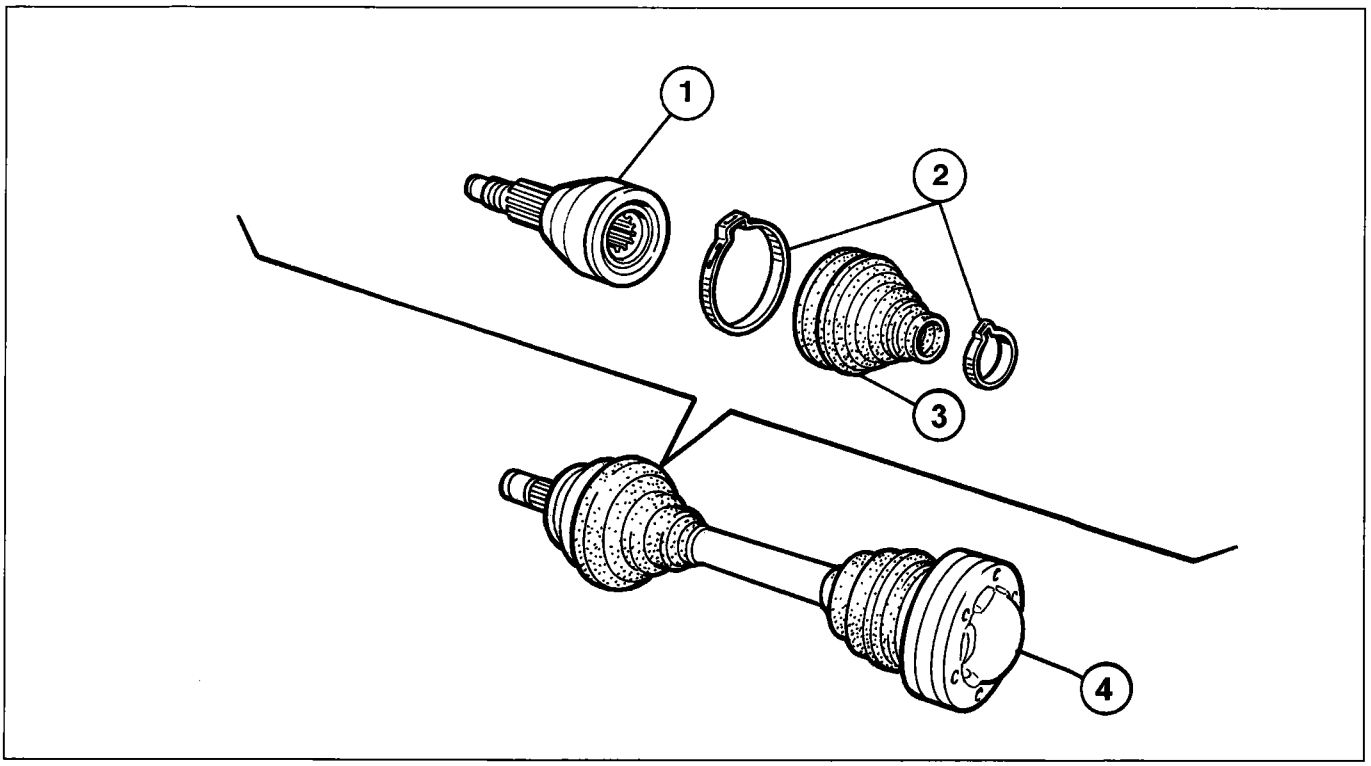

P4F045B01

1. Constant velocity joint, wheel side
2. Retaining clips
3. Dust excluder
4. Drive shaft - constant velocity joint assembly, gearbox side (supplied as a spare part)

21-27.

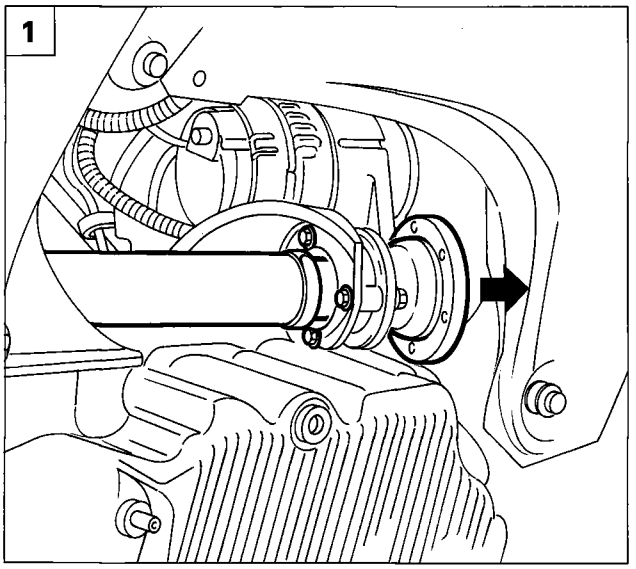

P4F040B02

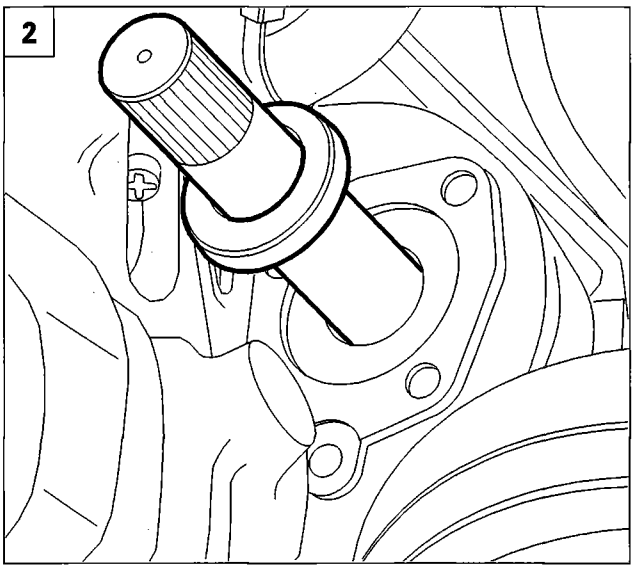

P4F046B01

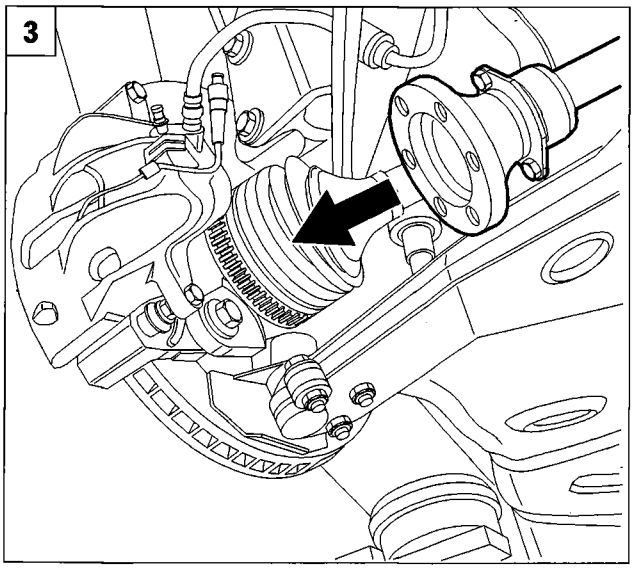

P4F046B02

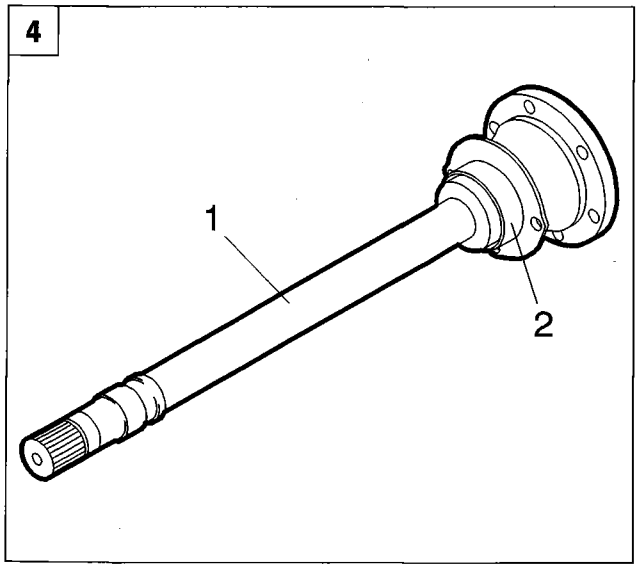

P4F046B03

REMOVING - REFITTING

Place the car on ramps, remove the front right wheel, drain the gearbox oil and carry out the operations listed below, already illustrated previously:

- Remove the right wheelarch guard
- Disconnect the right tie rod end balljoint head
- Disconnect the vertical link and drive shaft from the joint

1. Undo the bolts securing the intermediate shaft to the mounting.
2. Withdraw the intermediate shaft from its seating, then remove the dust seal.
3. Withdraw the intermediate shaft from the engine bay.
4. Check that the intermediate shaft (1) is not deformed or out of true; check that the bearing (2) is not scored and does not show signs of overheating or excessive wear.

NOTE *The bearing is not supplied as a spare part, so if it is found to be faulty, the complete intermediate shaft must be replaced.*

GEAR SELECTOR LINKAGE

To remove - refit the gear selector linkage, refer to the "gear selector linkage" section concerning the 1581 16v engine.

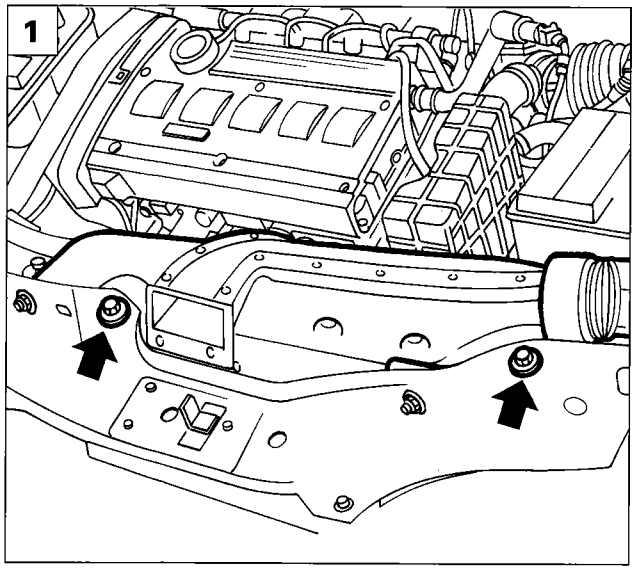

P47047B01

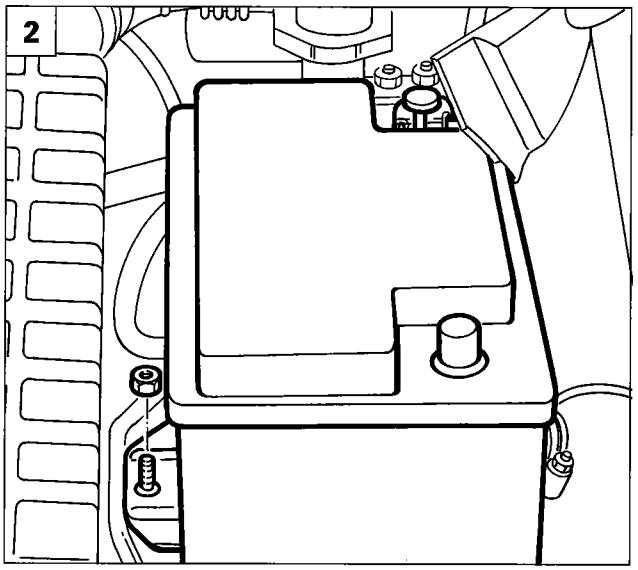

P4F047B02

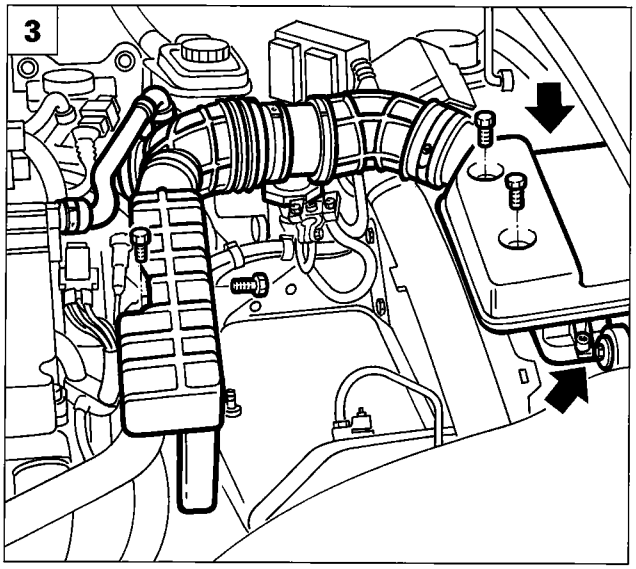

P4F047B03

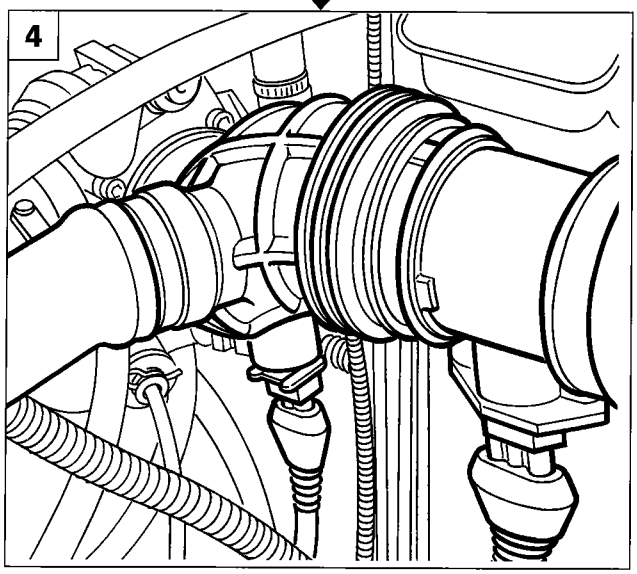

P4F047B04

REMOVING-REFITTING

Removing

Place the car on ramps, disconnect the battery's negative pole and the front wheels, then proceed as described below:

1. Remove the air intake duct by undoing the bolts shown in the figure.
2. Disconnect the battery's positive cable, then remove the battery from the engine compartment, undoing the nut securing the retaining bracket.

3-4. Disconnect the pipe connecting the air cleaner to the throttle body by undoing the clips indicated, and disconnect the connectors under the pipe; also remove the resonator.

5. Remove the relay box cover.

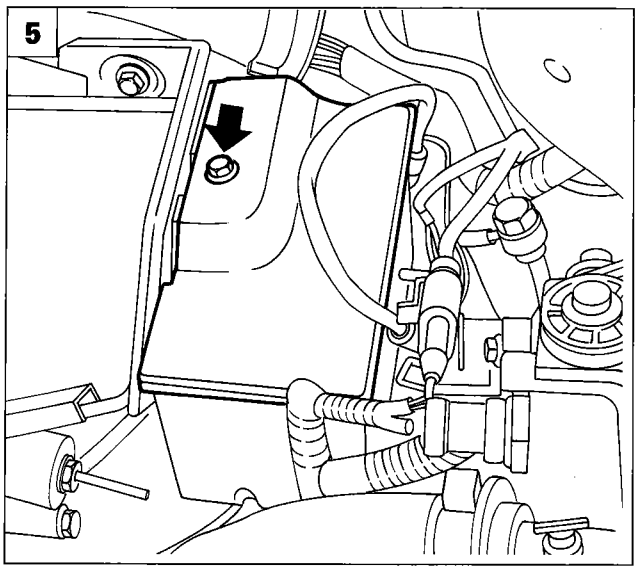

P4F020B04

21-27.

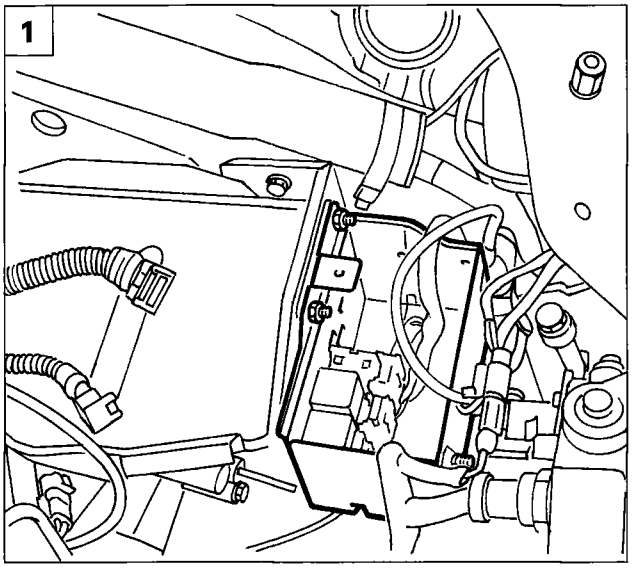

P4F035B01

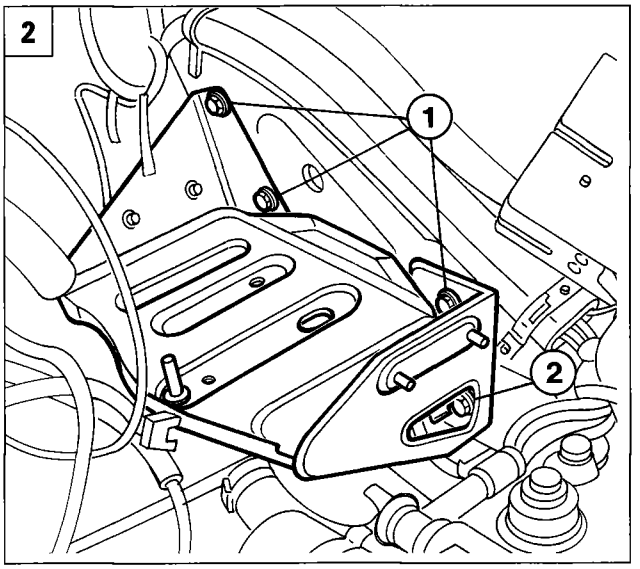

P4F021B03

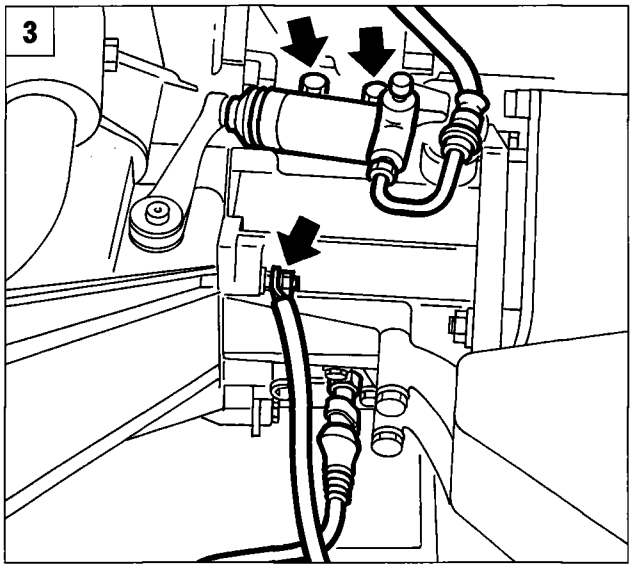

P4F048B01

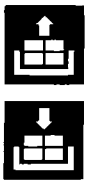

1. Remove the nuts securing the relay box to the battery cage, then move the box over to one side.
2. Remove the battery cage by undoing the bolts shown in the figure; also disconnect the electrical wiring retaining clips indicated.
3. Disconnect the hydraulic clutch master cylinder, earth cable and reversing lights switch from the gearbox.
4. Disconnect the gear selection lever by removing the split pin shown in the figure. Also disconnect the speedometer sensor connector.
5. Undo the nuts securing the cables shown in the figure to the battery's positive terminal.

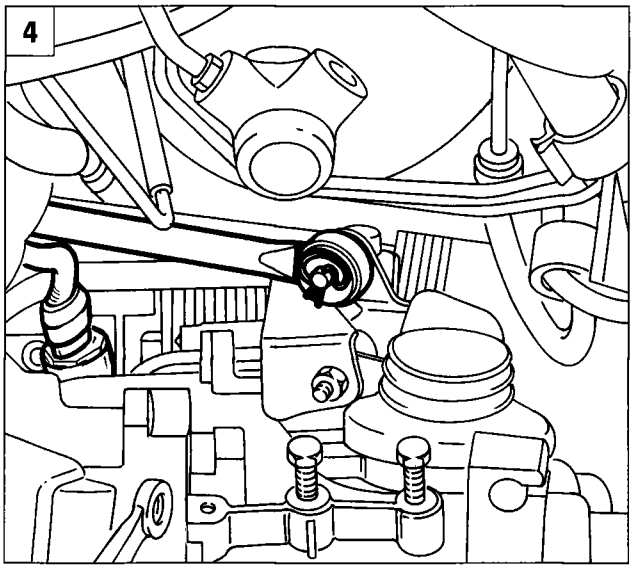

P4F048B02

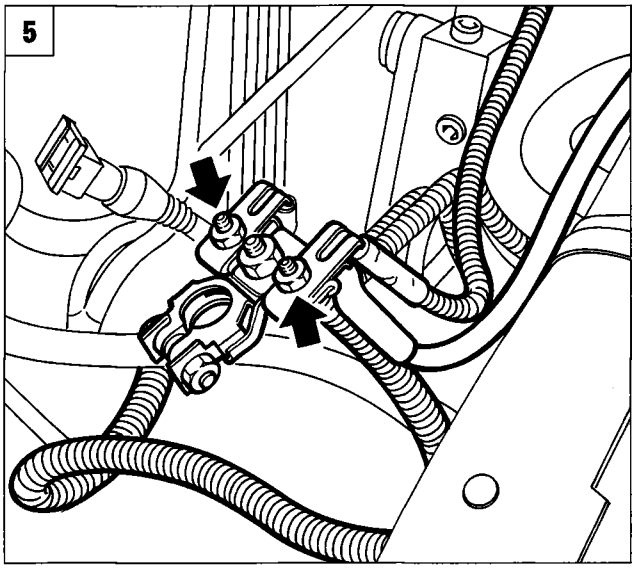

P4F048B03

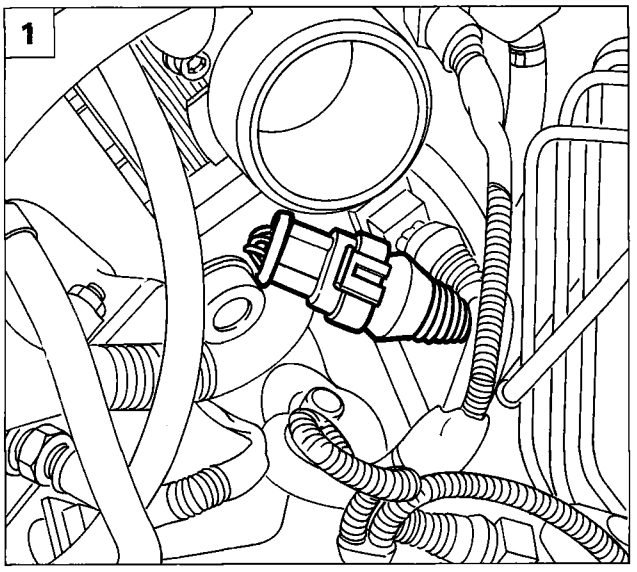

P4F049B01

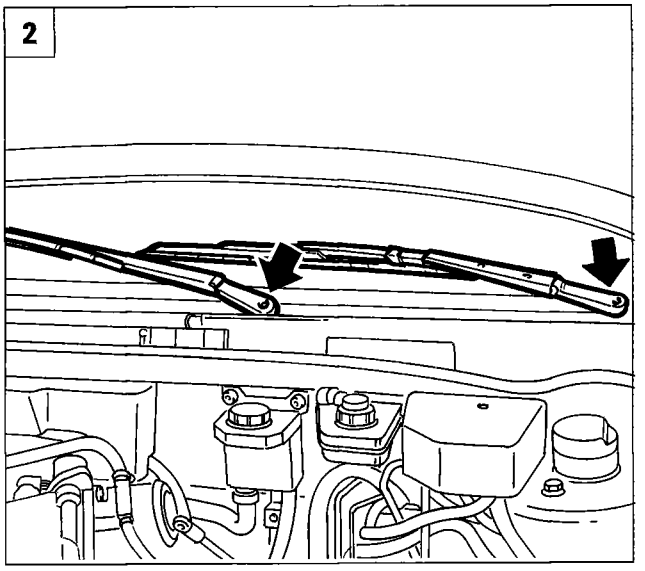

P4F54AB02

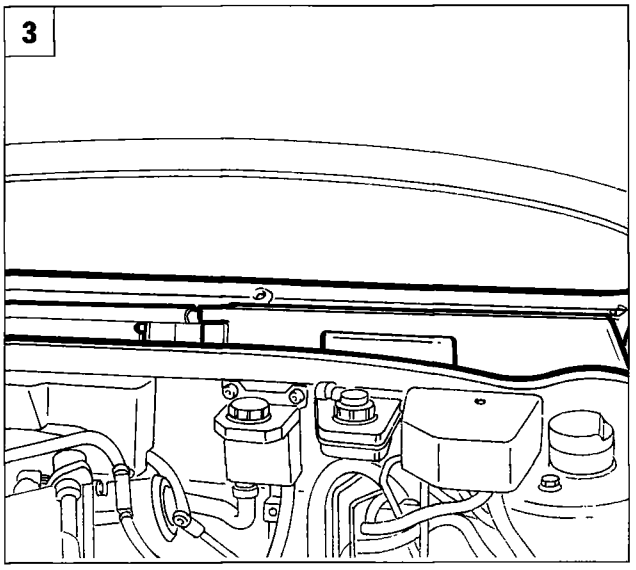

P4F54AB03

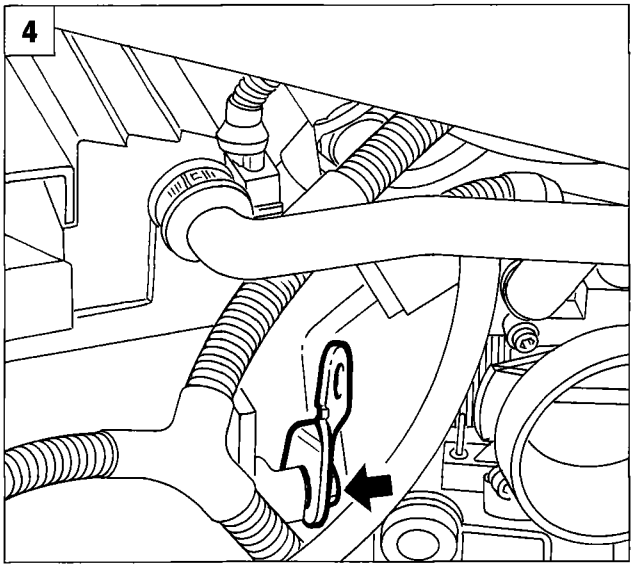

P4F049B02

1. Disconnect the Lambda probe connection.
2. Lift the protective cover, then remove the windscreen wiper arm by undoing the attachment nut.
3. Remove the right side guard from the anti-pollen filter; to facilitate removal, undo the bolts securing the left side guard.
4. Fit a supporting hook at the point shown in the figure, for hooking up the power unit during overhaul of the gearbox.

Copyright Fiat Auto

21-27.

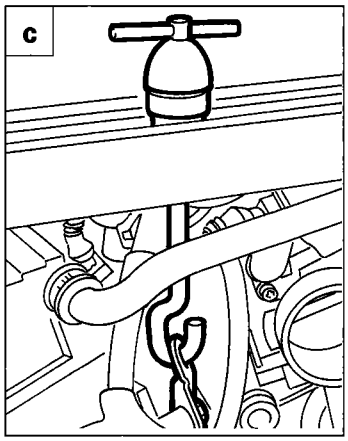

P4F050B02

1. Fit the power unit support crossbeam 1860851000 and adaptor 1860851001 in the special support points.

   a. Front support: insert the tool in the bonnet catch seating until it rests on the front subframe.
   b. Rear support: position the tool level with the central reinforcement of the flame-proof bulkhead.
   c. Secure the crossbeam hook to the eyelet fitted previously near the thermostat.

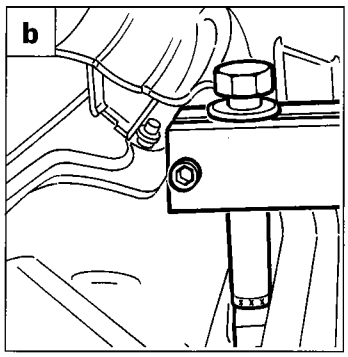

P4F006B05

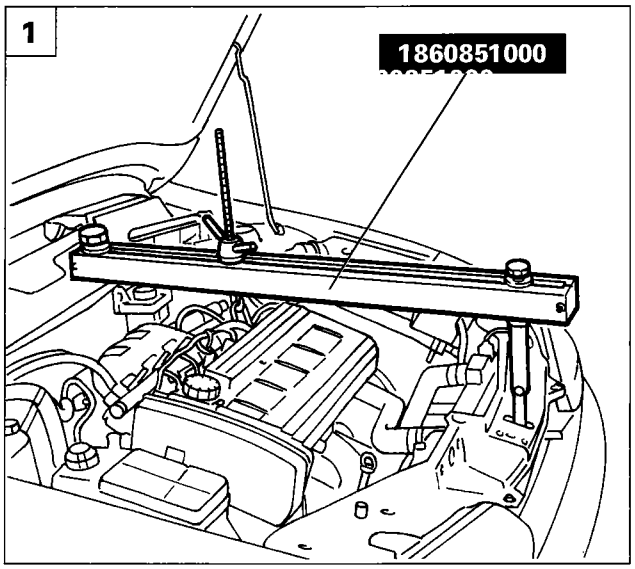

P4F050B01

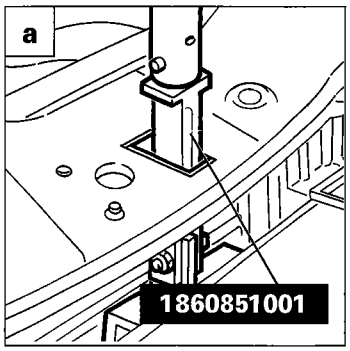

P4F006B03

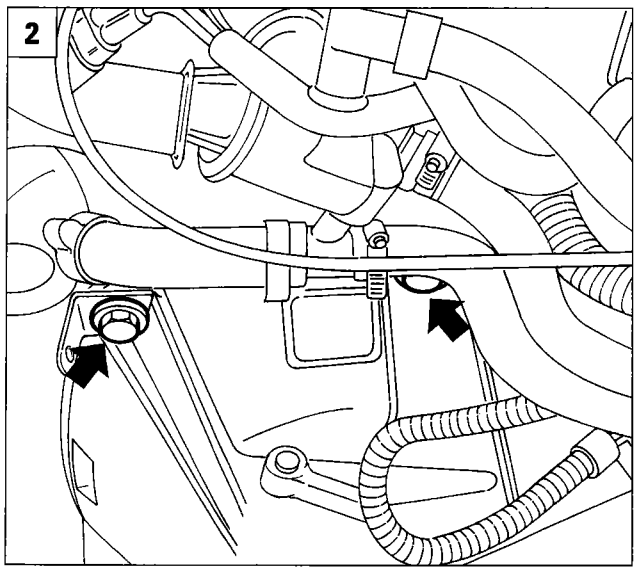

P4F050B03

2. Remove the gearbox top attachments.

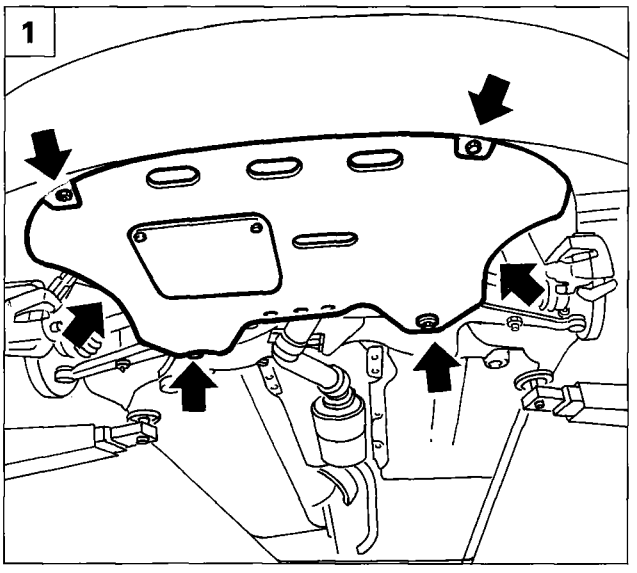

P4F051B01

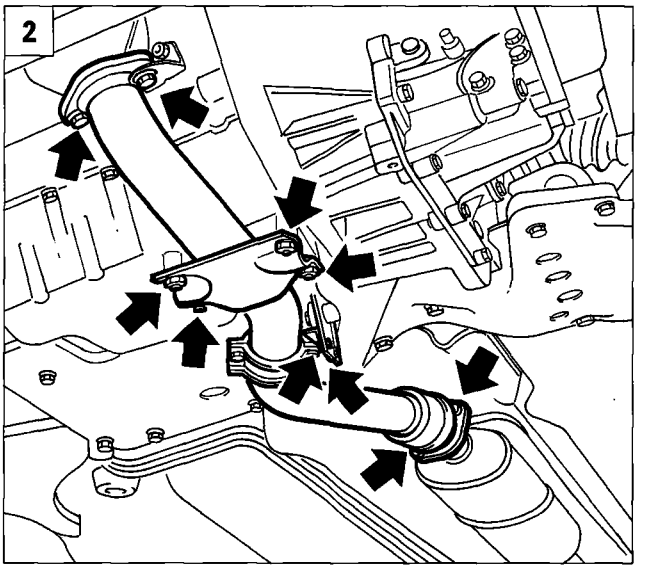

P4F051B02

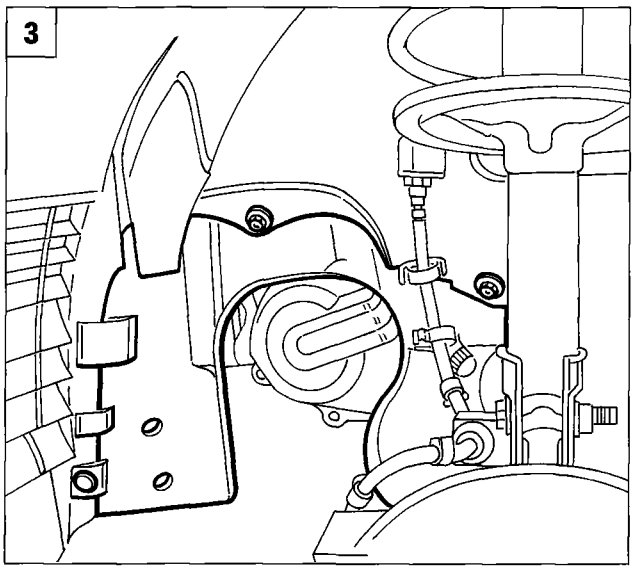

P4F003B02

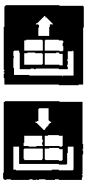

1. Remove the engine bay bottom guard.
2. Disconnect the first section of the exhaust pipe by undoing the attachments illustrated.
3. Remove the wheelarch trim on the gearbox side and timing gear side.
4. Disconnect the tie rod end balljoint head from the vertical link (gearbox side and timing side) using the puller 1847038000.
5. Undo the bolts securing the left drive shaft flange.

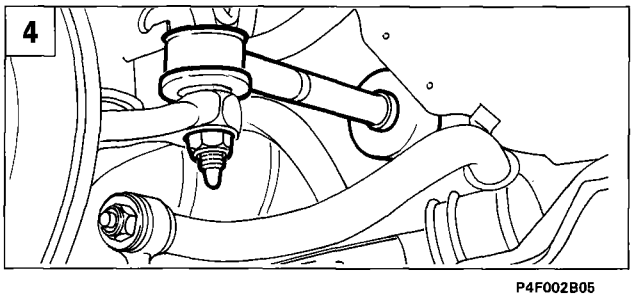

P4F002B05

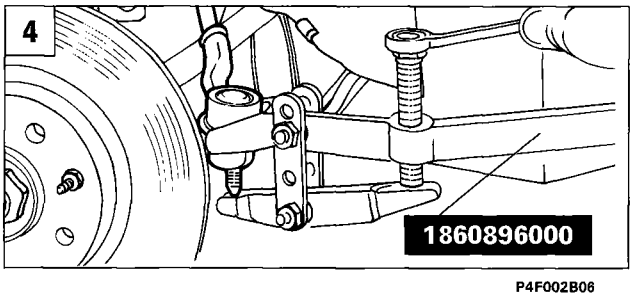

P4F002B06

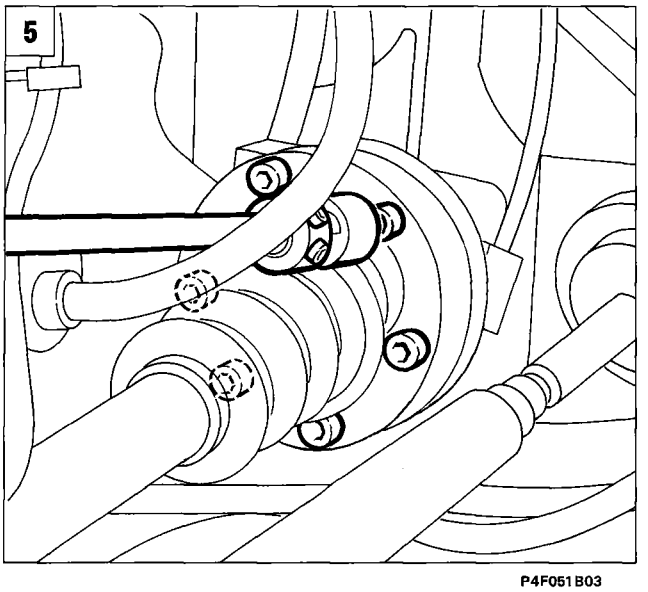

P4F051B03

21-27.

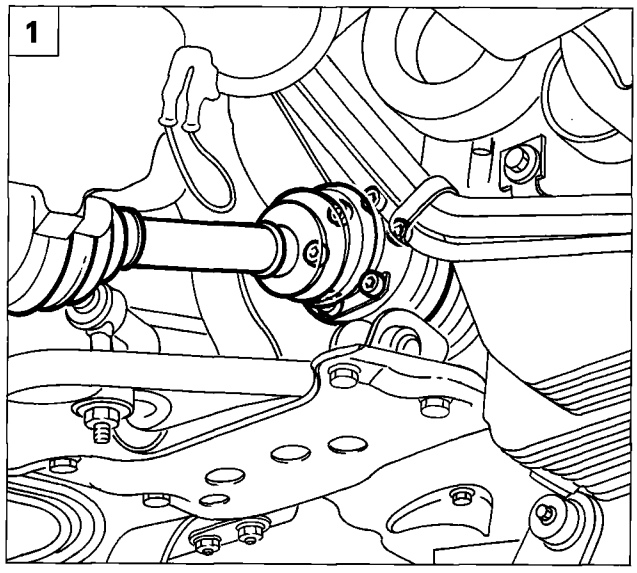

P4F052B01

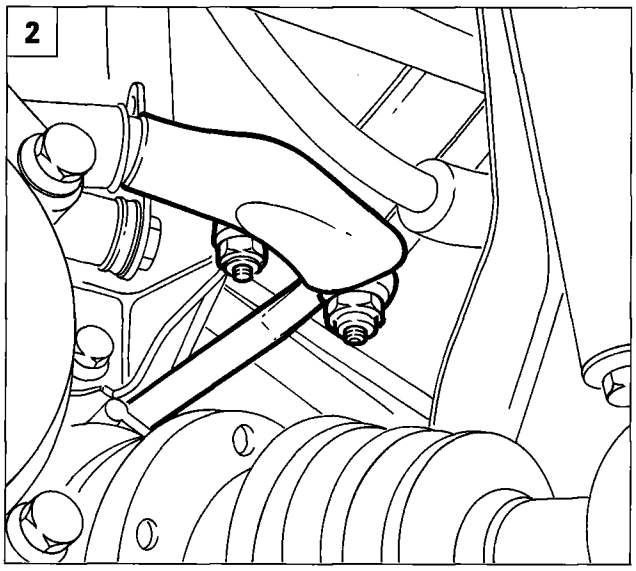

P4F052B02

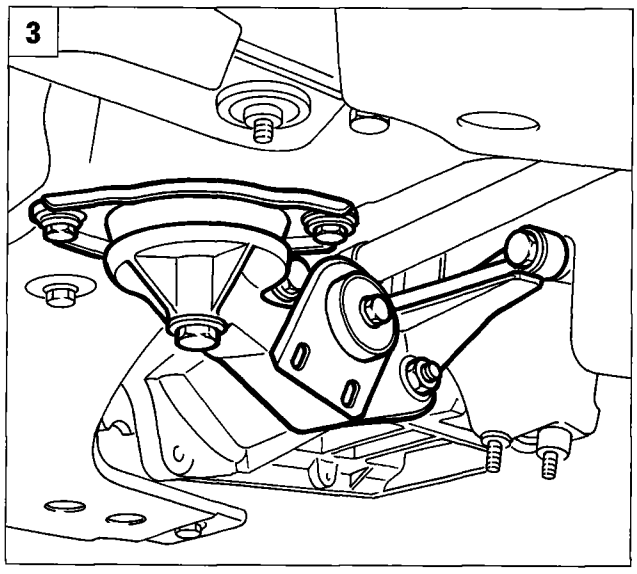

P4F052B03

1. Undo the bolts securing the right drive shaft flange.
2. Disconnect the gear selection and engagement levers, accessible from the wheelarch on the gearbox side.
3. Remove the power unit central mounting.
4. Remove the bolts securing the power steering box to the steering subframe. Secure the box to the body shell.
5. Disconnect the links connecting the anti-roll bar to the tie rod (right and left sides) to permit the subsequent removal of the steering subframe.

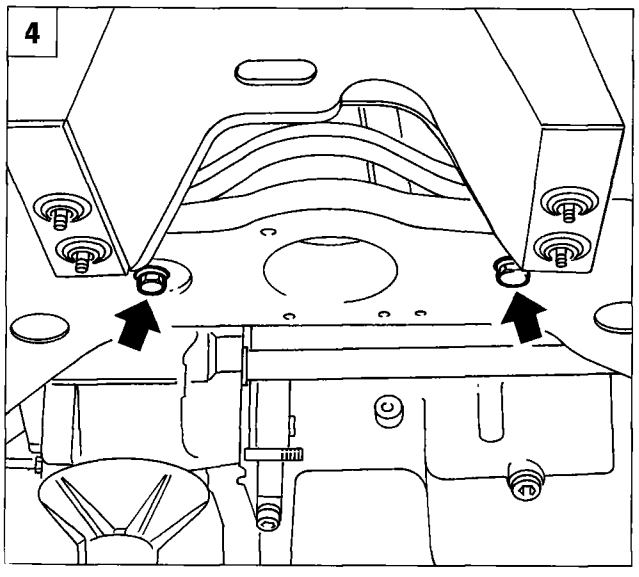

P4F052B04

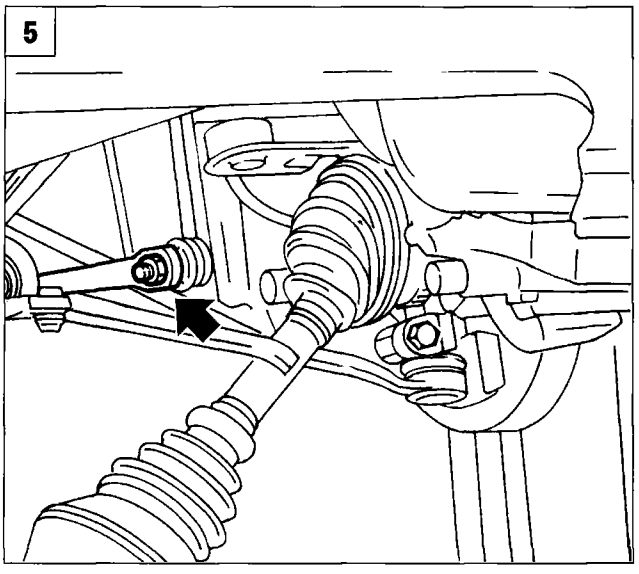

P4F09DX04

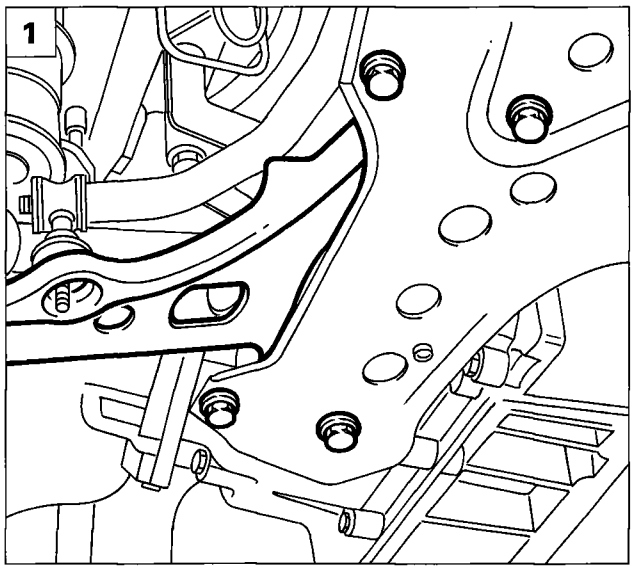

P4F053B01

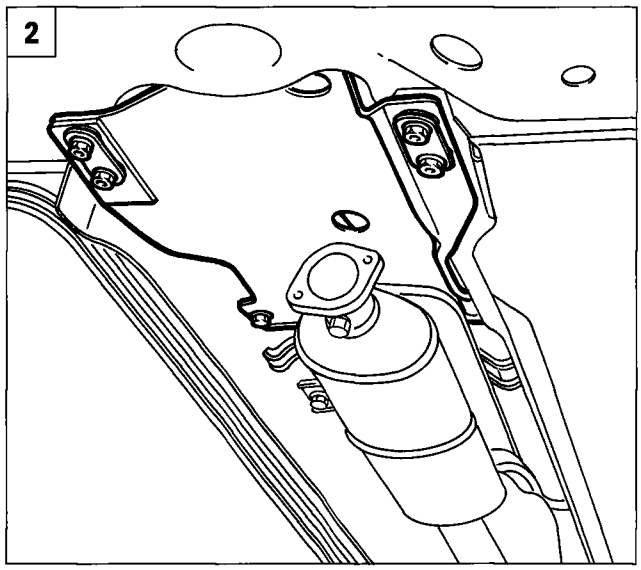

P4F053B02

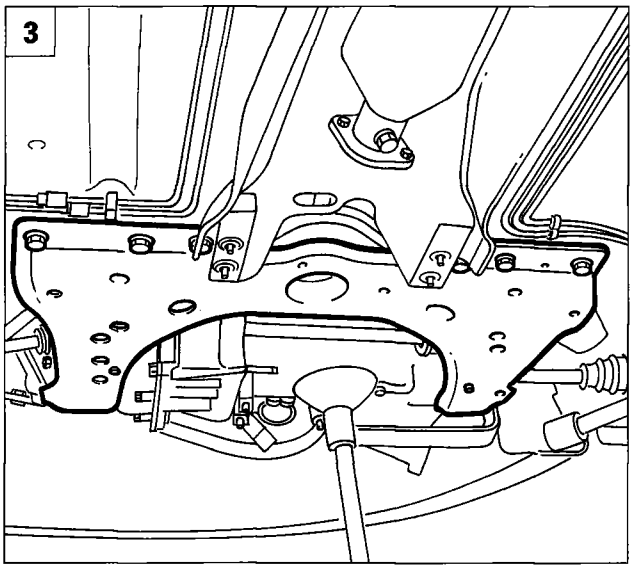

P4F053B03

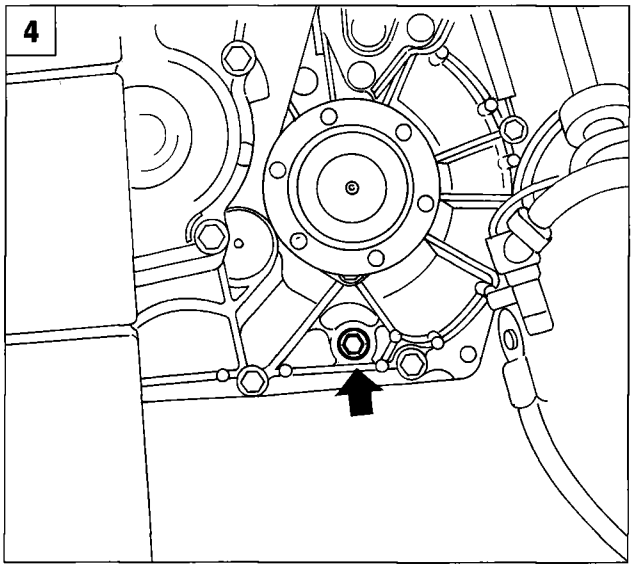

P4F040B01

1. Undo the bolts securing the wishbone (right side and left side) to the steering subframe; rotate the wishbone as appropriate to release it from the steering subframe.
2. Remove the bolts shown in the figure on the heat shield, to permit withdrawal of the steering subframe. If necessary, shim the heat shield to keep it raised off the body and to facilitate the withdrawal of the subframe.
3. Undo the bolts securing the steering subframe to the body shell; first remove the rear bolts, and then remove the side bolts with the help of a second operator, then withdraw the subframe complete with anti-roll bar.
4. Drain the gearbox oil by undoing the plug shown in the figure.

21-27.

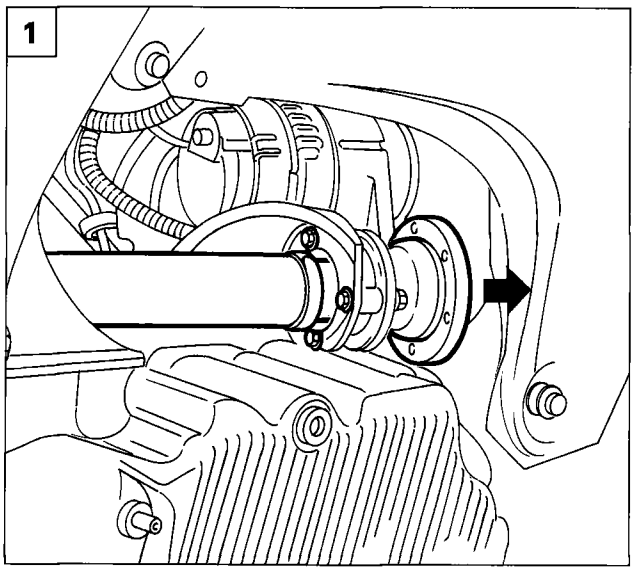

P4F040B02

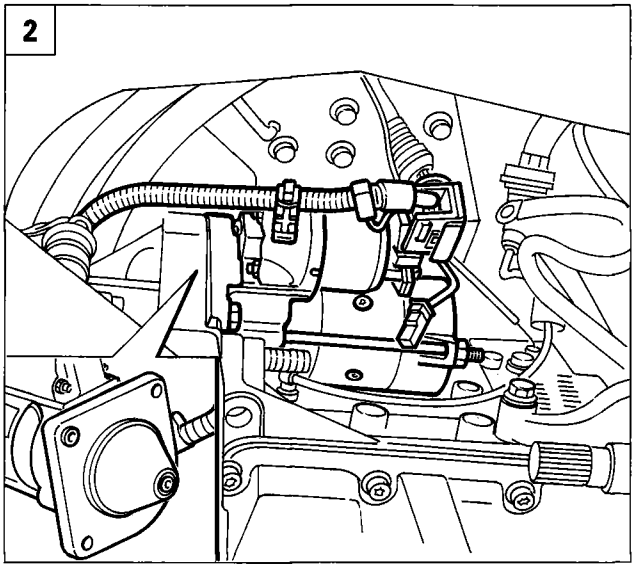

P4F041B01

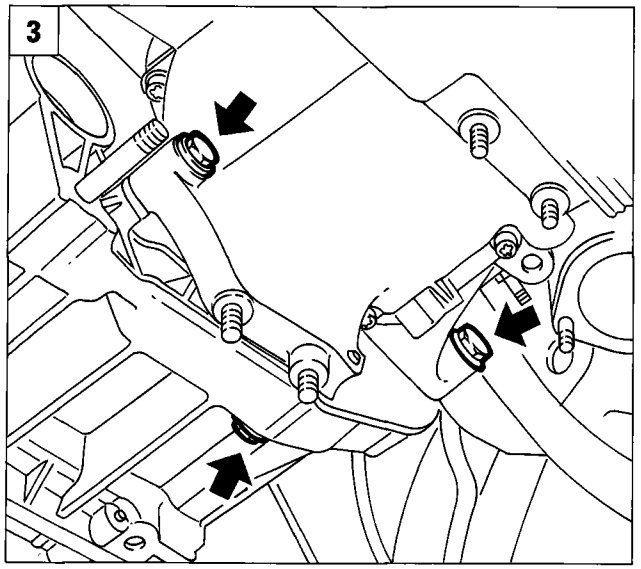

P4F054B01

1. Undo the bolts securing the intermediate shaft to the engine, release it from the gearbox and move it away from the working area, securing it in an appropriate manner.
2. Remove the starter motor by undoing the attachments.
3. Remove the bottom bolts securing the gearbox to the power unit.
4. Undo the bolts shown in the figure from the gearbox bellhousing, to allow the gearbox support tool to be fitted.
5. Fit the gearbox support tool 1860873000 on a hydraulic jack, then secure it to the gearbox as shown in the figure.

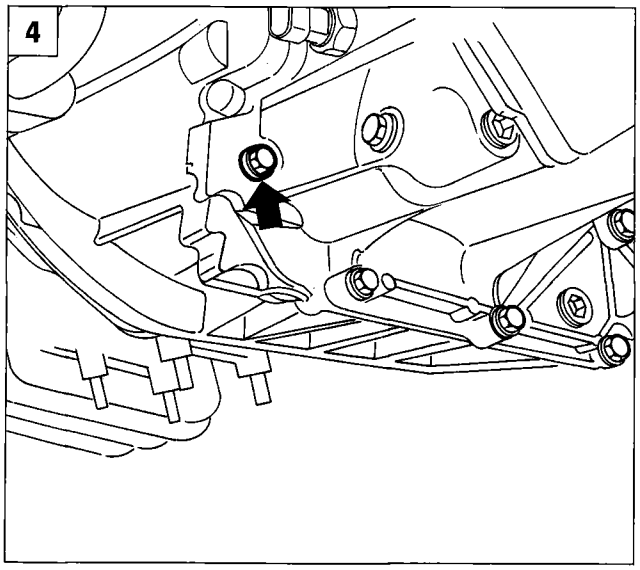

P4F026B01

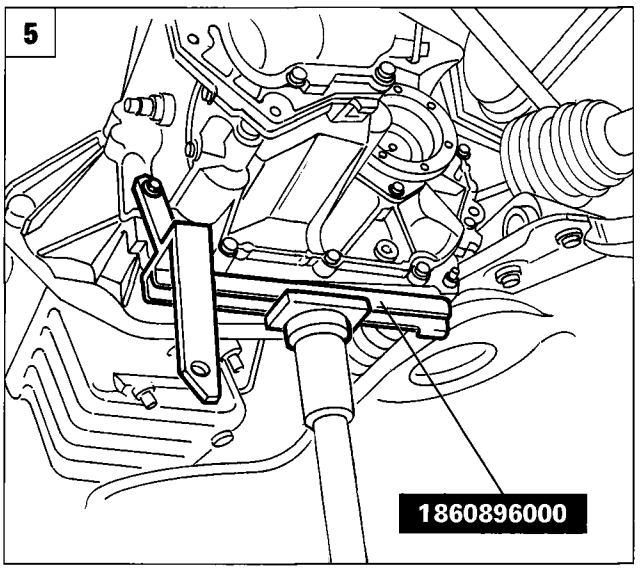

P4F007B02

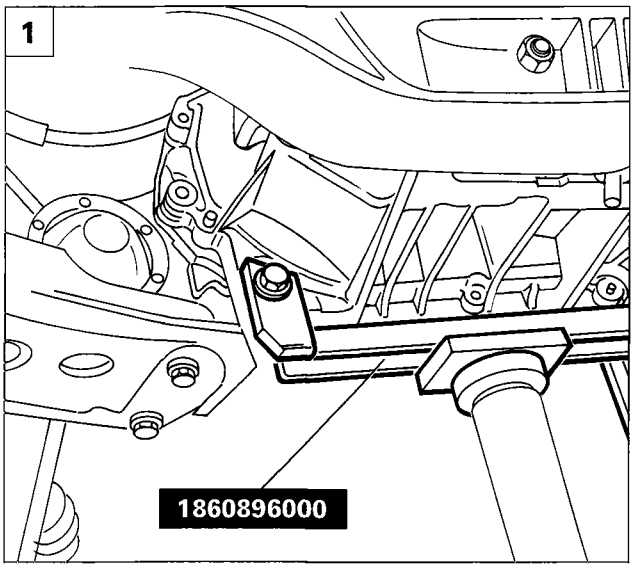

P4F007B03

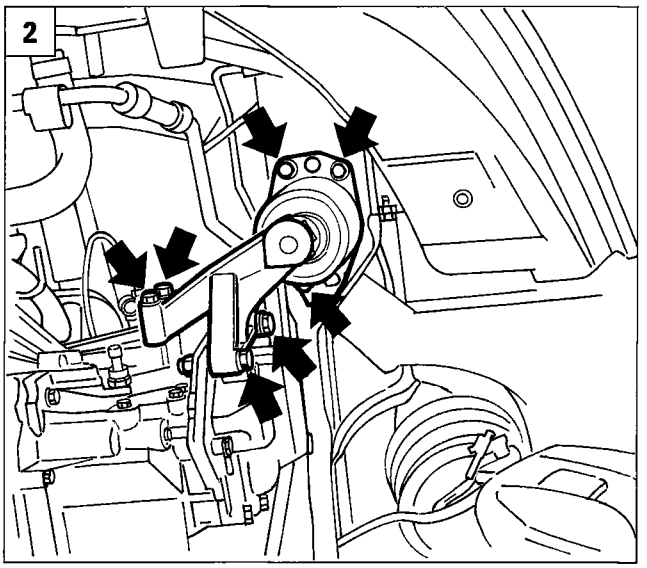

P4F027B01

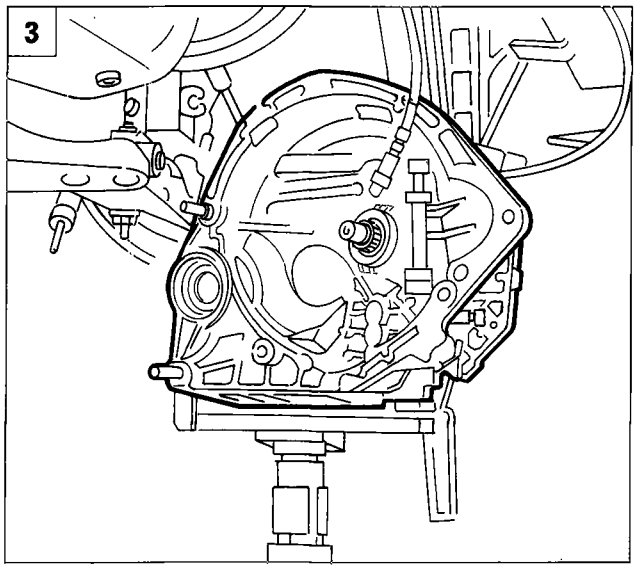

P4F055B01

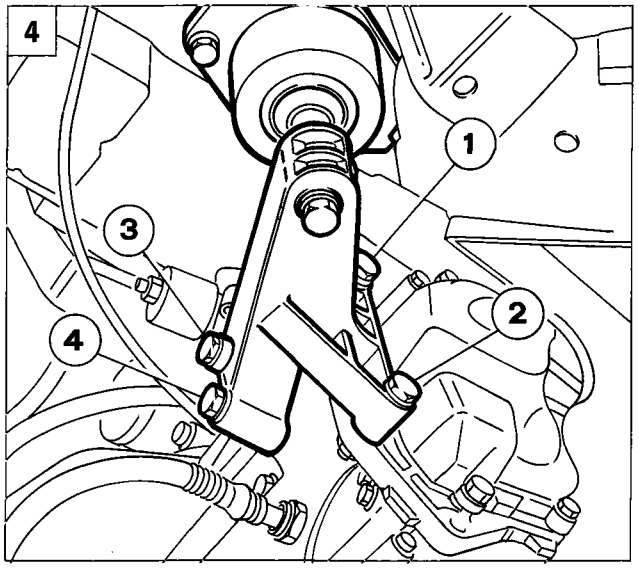

P4F028B01

1. Rear attachment of gearbox support tool 1860873000.
2. Remove the engine mounting, gearbox side.
3. Manoeuvre the hydraulic jack in order to release the gearbox from the attachment pins and surrounding parts. Gradually lower the jack and withdraw the gearbox.

Refitting

4. When refitting the engine mounting, gearbox side, to avoid creating stresses on the gearbox sealing surfaces, resulting in deformation and oil leaks, closely observe the following bolt tightening sequence:

- Tighten the bolts (1) and (2) to a preliminary torque of 0.5 daNm;
- Tighten the bolts (3) and (4) to a preliminary torque of 0.5 daNm, then tighten them to the specified torque;
- Tighten the bolts (1) and (2) to the specified torque.

For the remaining refitting operations, reverse the procedure described for removal. To fit the clutch release bearing and gearbox bellhousing in the car, refer to the description for refitting of the gearbox of the 1370 12v engine.

The gearbox oil level must be 9 mm below the hole for the oil filler plug.

21-27.

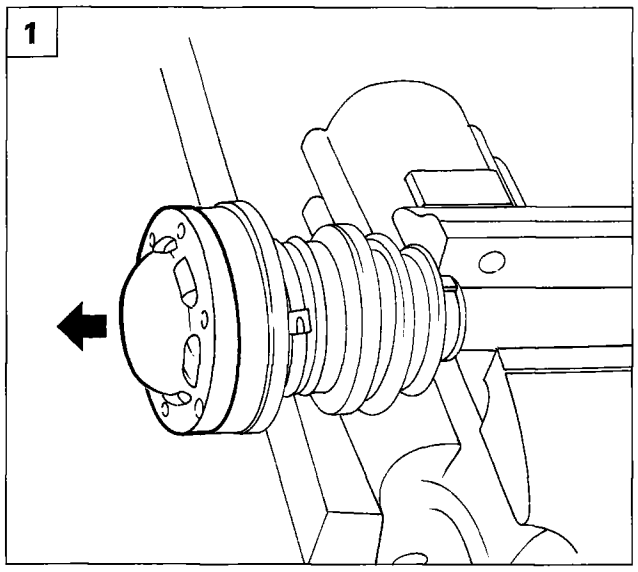

P4F056B01

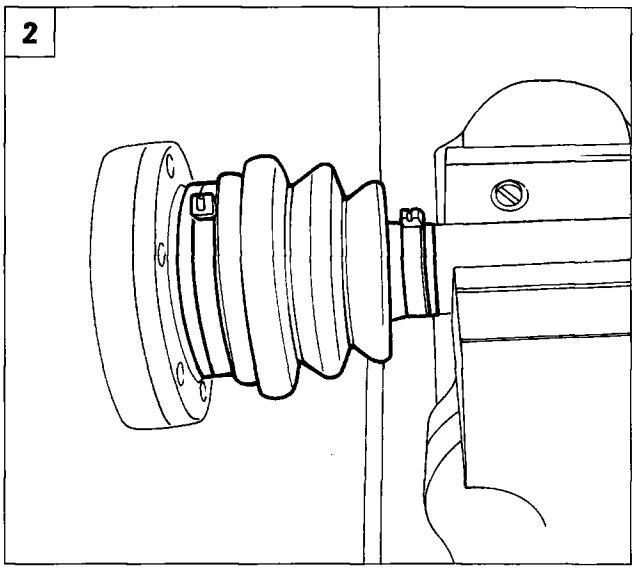

P4F056B02

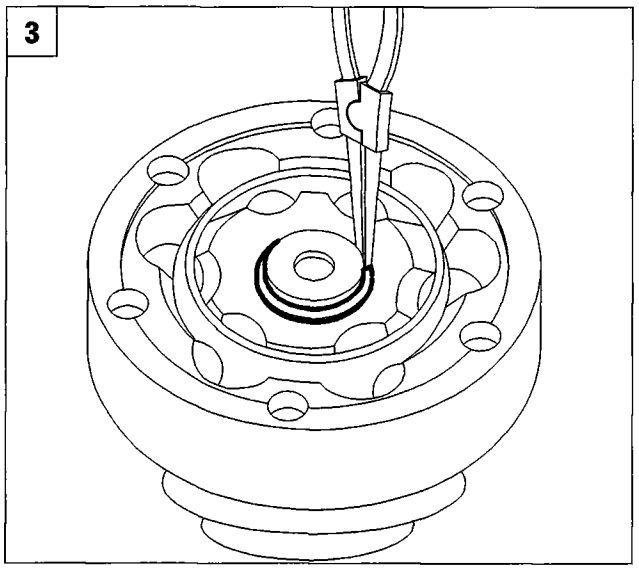

P4F056B03

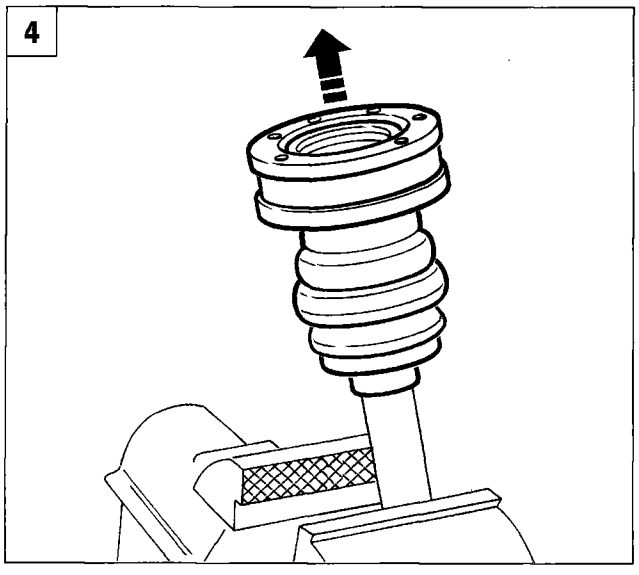

P4F056B04

REMOVING-REFITTING DRIVE SHAFTS

To remove-refit the drive shafts, refer to the procedure described for the 1747 16V engine.

DISMANTLING

NOTE This section describes only the overhaul of the constant velocity joint on the gearbox side; for the overhaul of the constant velocity joint on the wheel side proceed as described for the 1747 16v engine.

1. Remove the protective cap on the constant velocity joint, gearbox side.
2. Remove the two retaining clips on the dust excluder, gearbox side, then remove it.
3. Clean the grease from the inside of the constant velocity joint and remove the circlip from its seating.
4. Withdraw the joint from the drive shaft and then remove the dust excluder.

Whenever the dust excluder is removed, it is advisable to fit a new one.

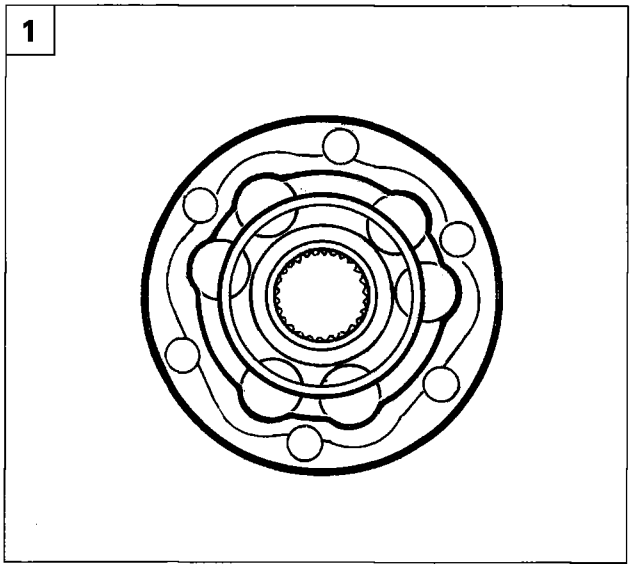

P4F057B01

REFITTING

1. Wash the constant velocity joints thoroughly with diesel or petrol, and visually check that the balls and their seatings are perfectly specular, with no signs of seizure or scoring.

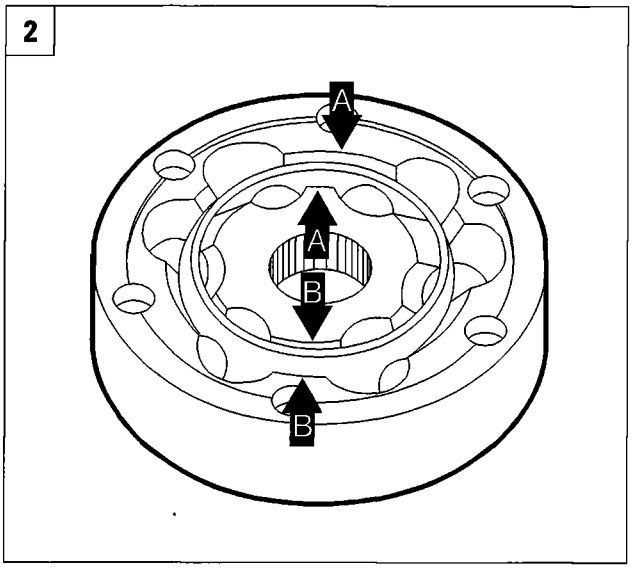

P4F057B02

2. If the balls fall out of their seatings while the joints are being withdrawn, to refit them correctly, follow the references given in the figure; i.e. "A" lining up with "A" and "B" with "B". If not, the joint would remain locked.

Whenever a dust excluder is removed, it is advisable to fit a new one, and it is important to fill both the constant velocity joint and the dust excluder with TUTELA MRM2.

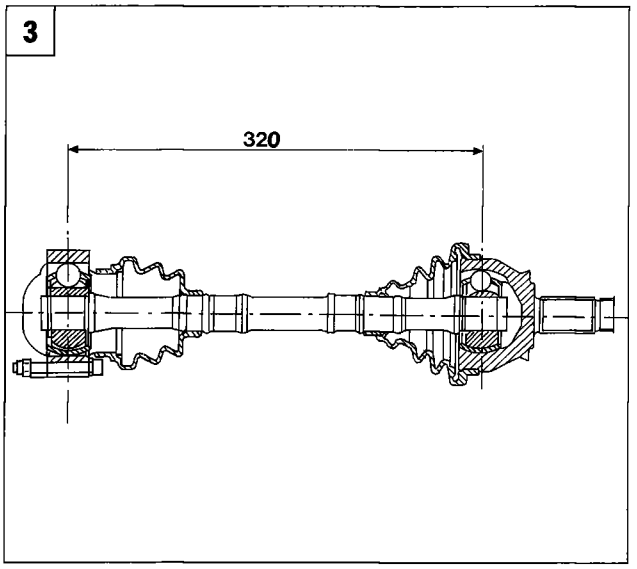

P4F057B03

When refitting the constant velocity joint, wheel side, it must be connected to a green category 2 or white category 3 splined shaft.

3. Overall view of drive shafts - constant velocity joints

21-27.

Components of the transmission of drive

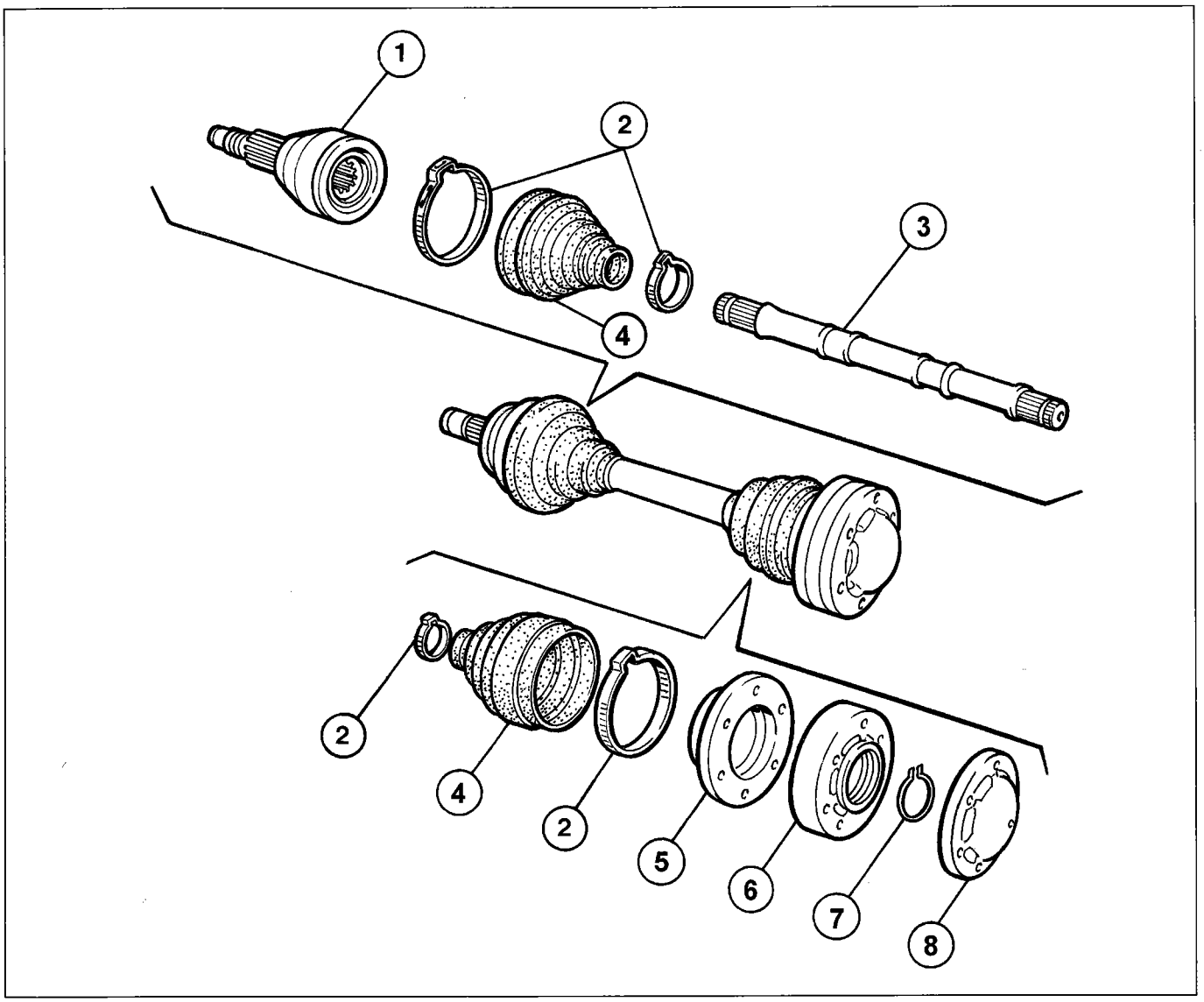

P4F058B01

1. Constant velocity joint, wheel side
2. Retaining clips
3. Drive shaft
4. Dust excluder
5. Flange for constant velocity joint, gearbox side
7. Constant velocity joint, gearbox side
6. Circlip
8. Protective cap

REMOVING-REFITTING INTERMEDIATE SHAFT

To remove and refit the intermediate shaft, refer to the description concerning the 1747 16v engine.

REMOVING-REFITTING GEAR SELECTOR LINKAGE

To remove-refit the gear selector linkage, refer to the description concerning the 1581 16V engine.

TOOLS TO BE MADE

Tool to be made for removing the automatic transmission on the 1580 16v engine, and the gearbox and power unit on the 2387 TD engine

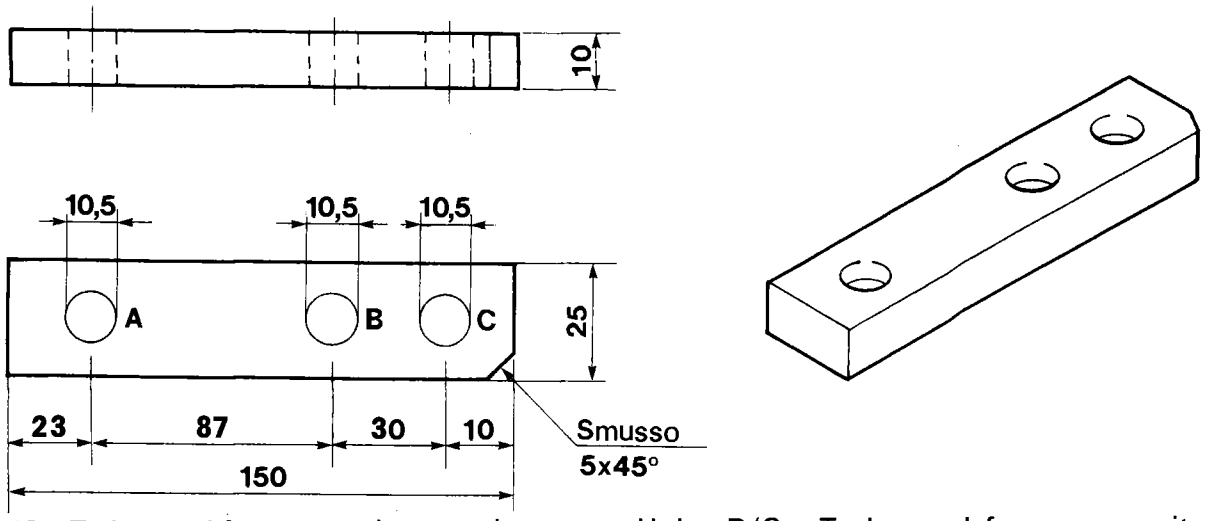

Holes A/C - To be used for automatic transmission 1580 16v

Holes B/C - To be used for power unit and gearbox 2387 TD

Tool to be made for removing the gearbox and power unit on the 2387 TD engine

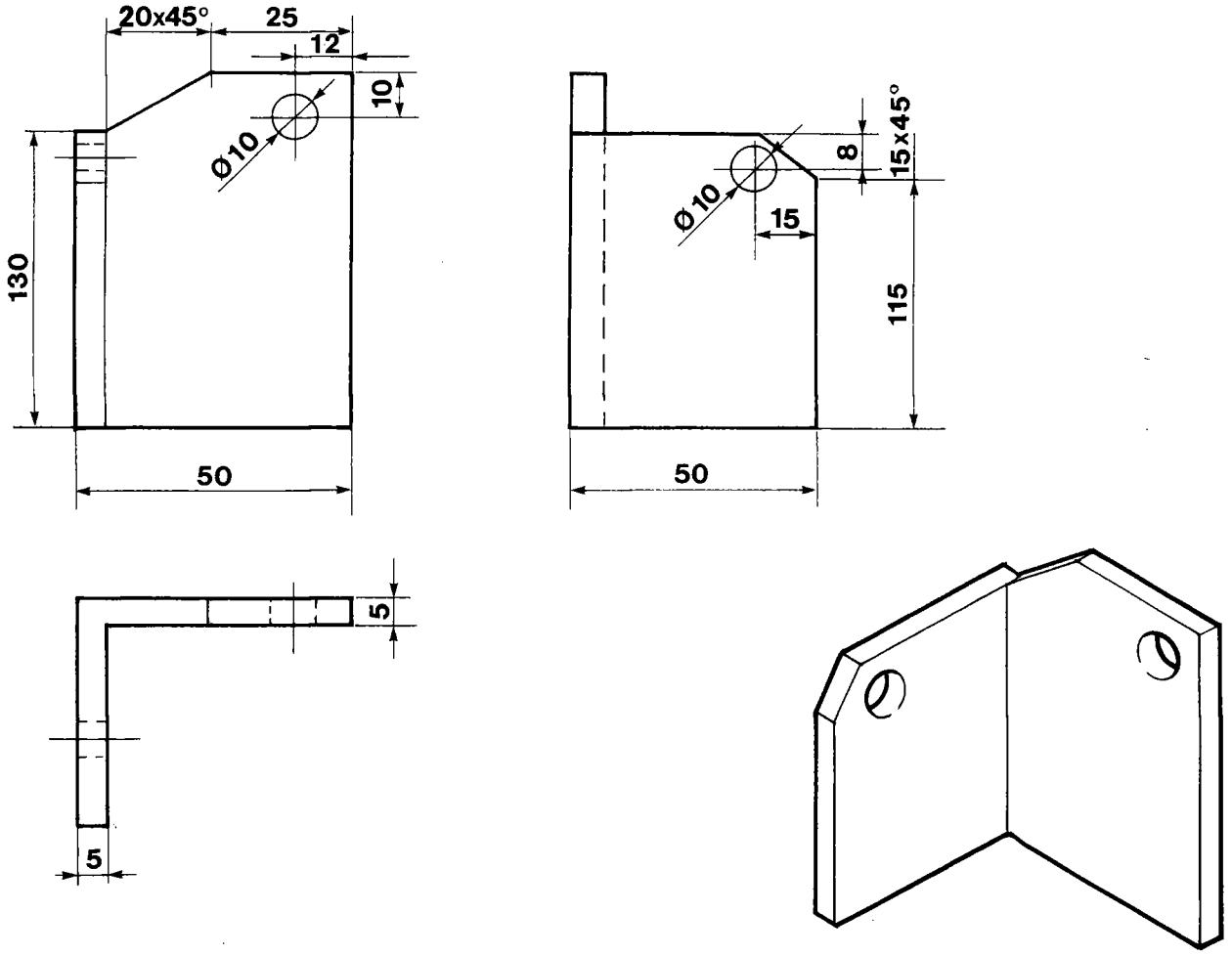

P4F059B01

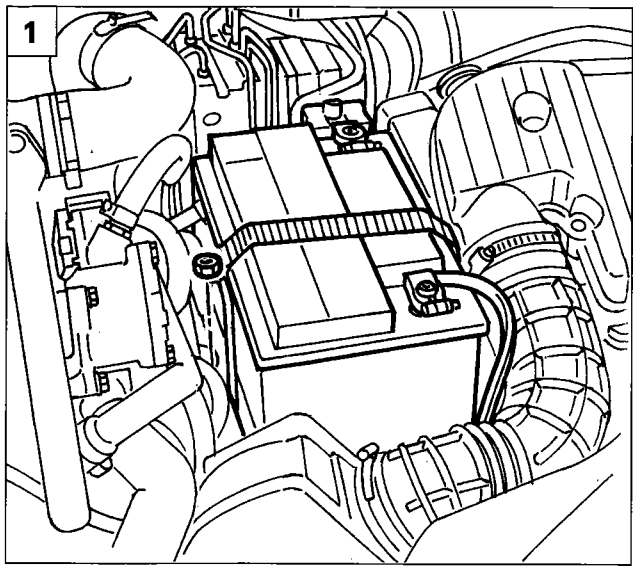

P4F060B01

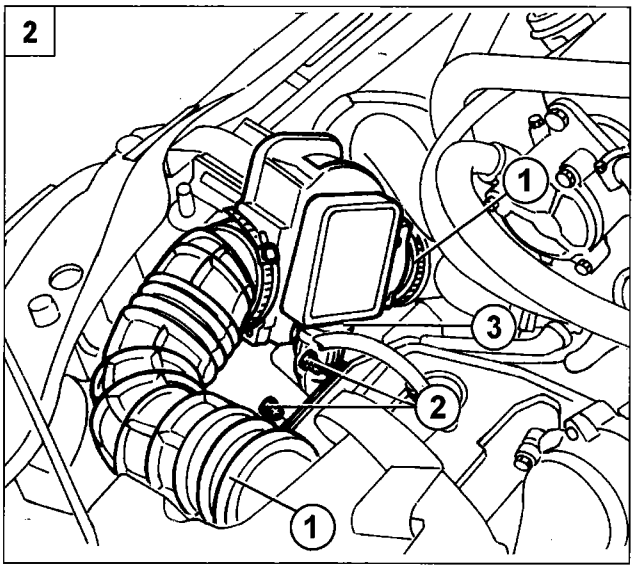

P4F060B02

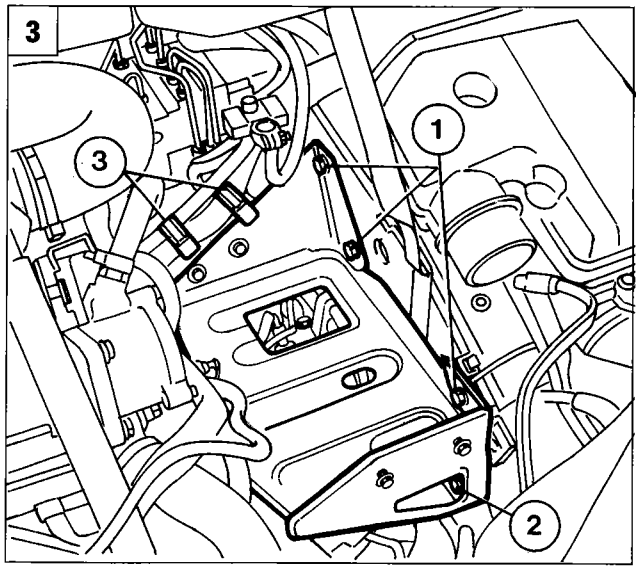

P4F060B03

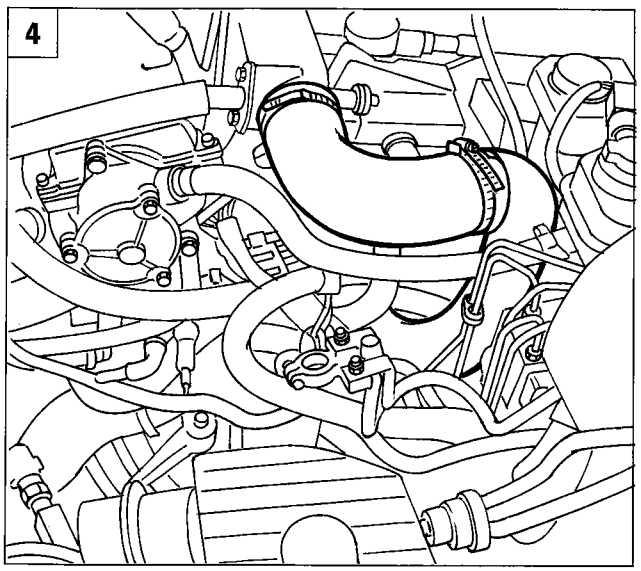

P4F060B04

REMOVING - REFITTING

Removing

Place the car on ramps, remove the front wheels, disconnect the battery's negative pole, drain the air conditioning system as described in Section 50, and proceed as illustrated below.

1. Disconnect the battery's positive pole, undo the nut securing the battery to the cage, then remove it from the engine compartment.
2. Undo the two clips (1), unscrew the bolts (2), disconnect the connector (3) and then remove the air intake hose complete with flowmeter.
3. Undo the bolts (1), slacken the bolt (2), open the clips (3) releasing the engine wiring, then remove the battery cage.
4. Undo the clips and remove the hose illustrated.

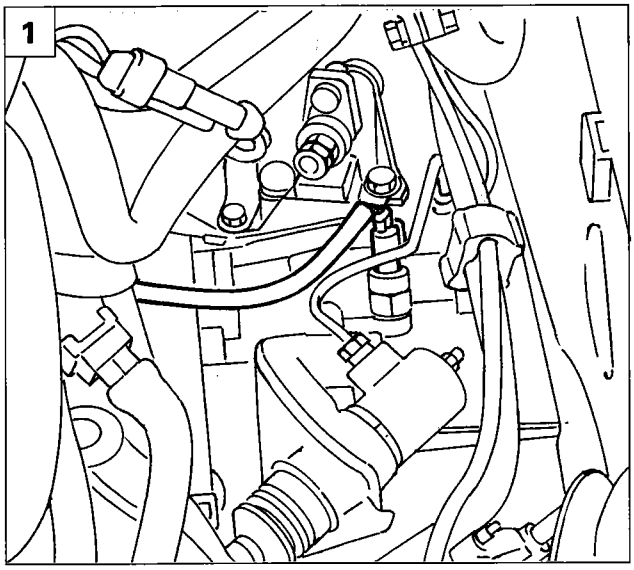

P4F061B01

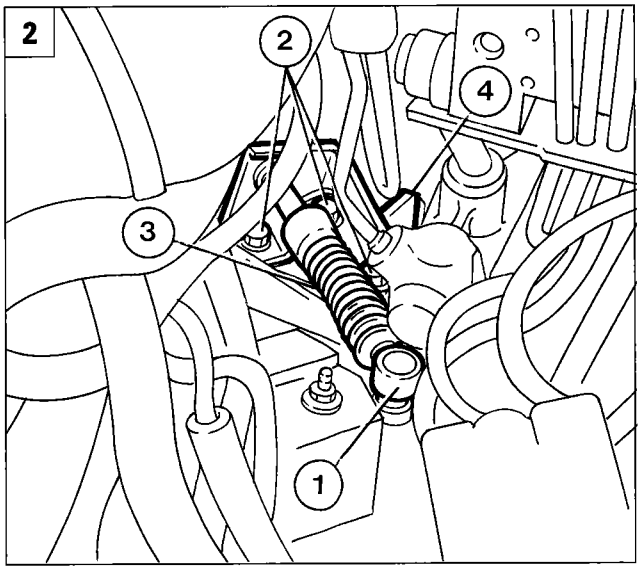

P4F061B02

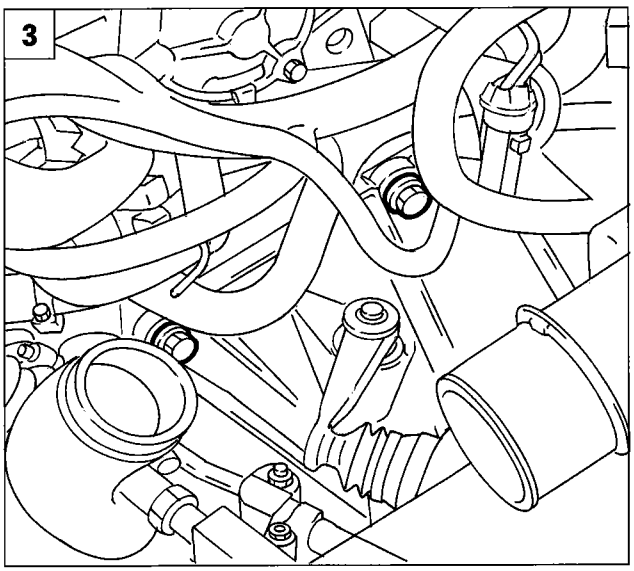

P4F061B03

1. Disconnect the reversing light switch connector.
2. Remove the head (1) from the balljoint, undo the bolts (2), then detach from the gearbox the gear selector cable (3) complete with mounting bracket (4).
3. Undo the top bolts securing the gearbox bellhousing to the engine block.
4. Remove the two windscreen wiper arms by undoing the nuts.
5. Remove the plastic covers illustrated.

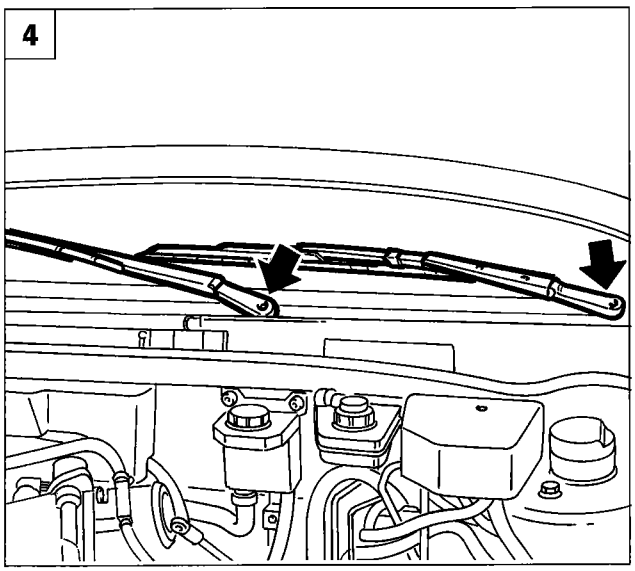

P4F54AB02

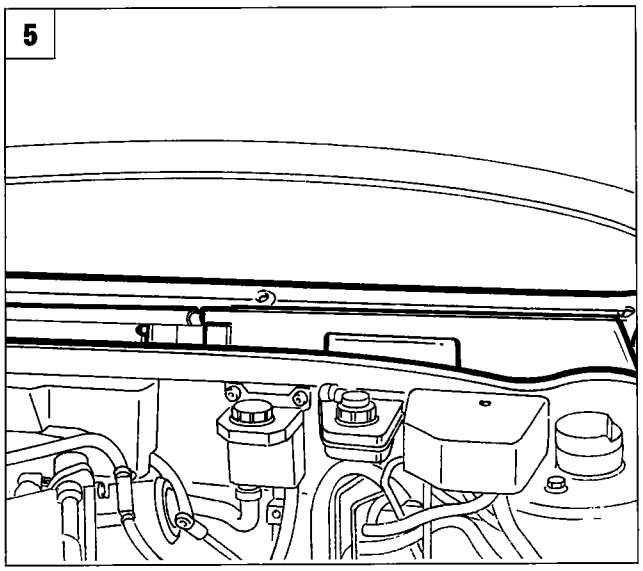

P4F54AB03

Copyright Fiat Auto

21-27.

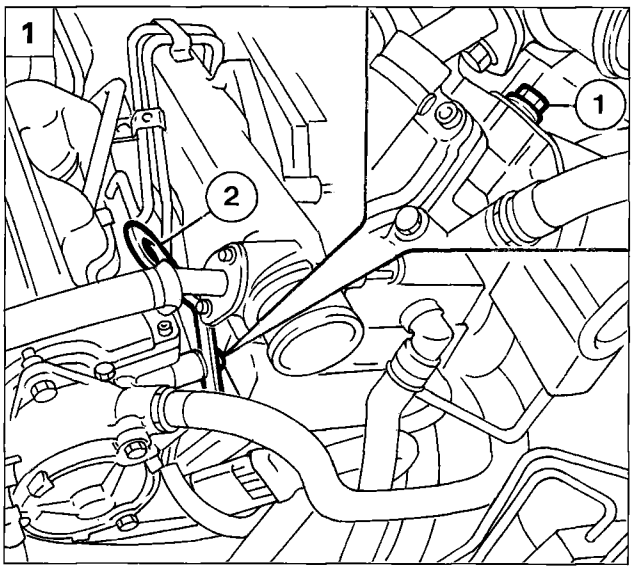

P4F062B01

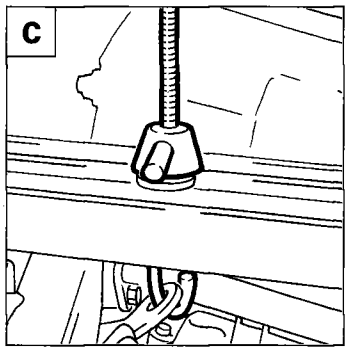

P4F062B03

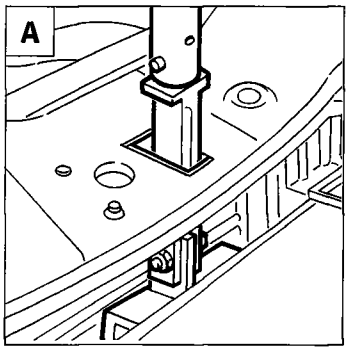

P4F006B03

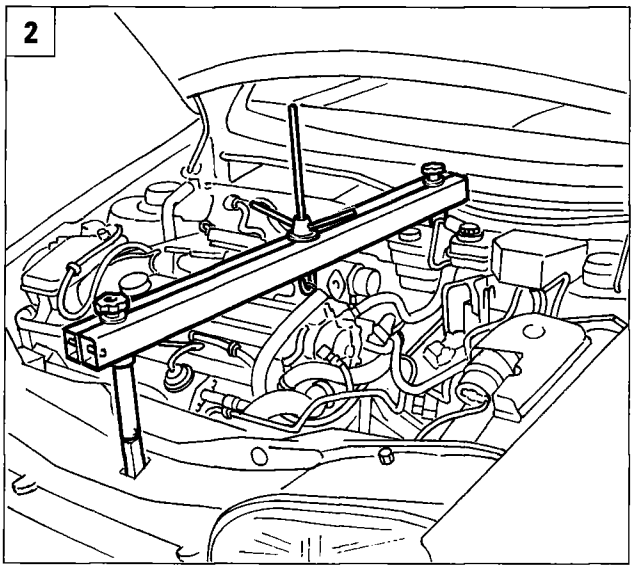

P4F062B02

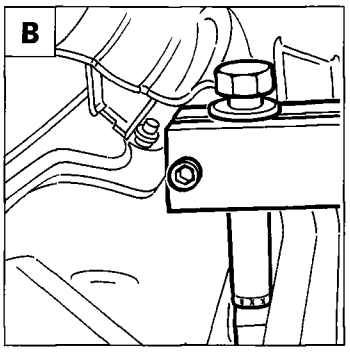

P4F006B05

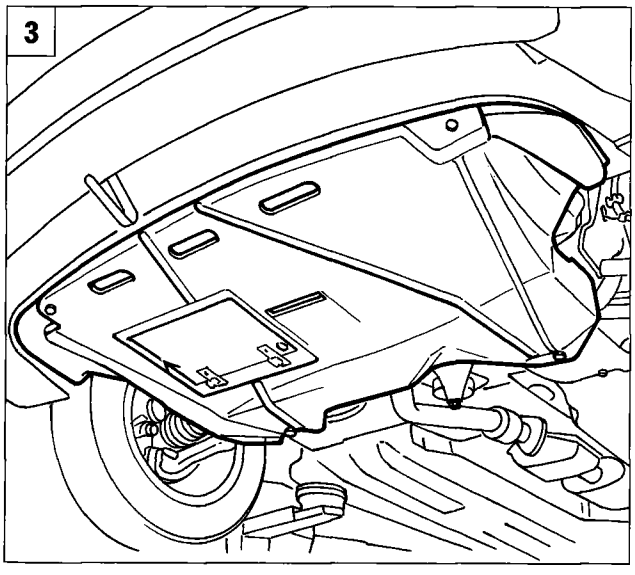

P4F003B01

1. Undo the nut (1) illustrated and fit the mounting bracket (2).
2. Fit the engine support cross beam 1860851000 and adaptor 1860851001 in the appropriate support points.

A. Front support: insert the tool in the bonnet catch seating, so that it rests on the steering subframe.

B. Rear support: fit the tool level with the central reinforcement of the flame-proof bulkhead.

C. Secure the cross beam hook to the bracket fitted previously.

3. Raise the ramps and remove the engine compartment bottom guard.

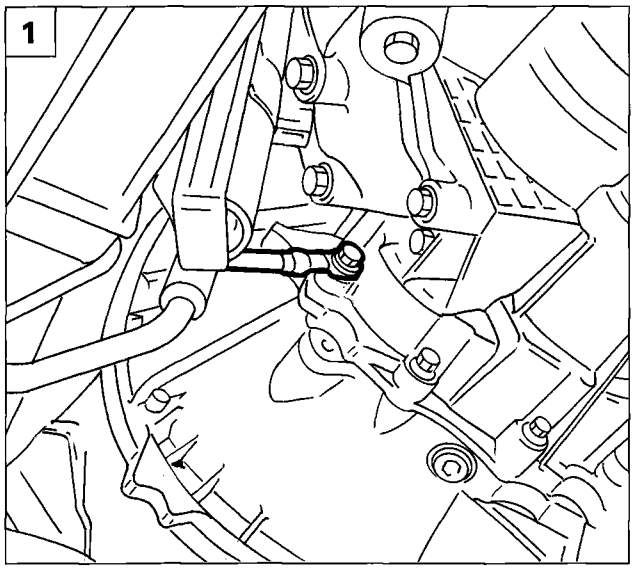

P4F063B01

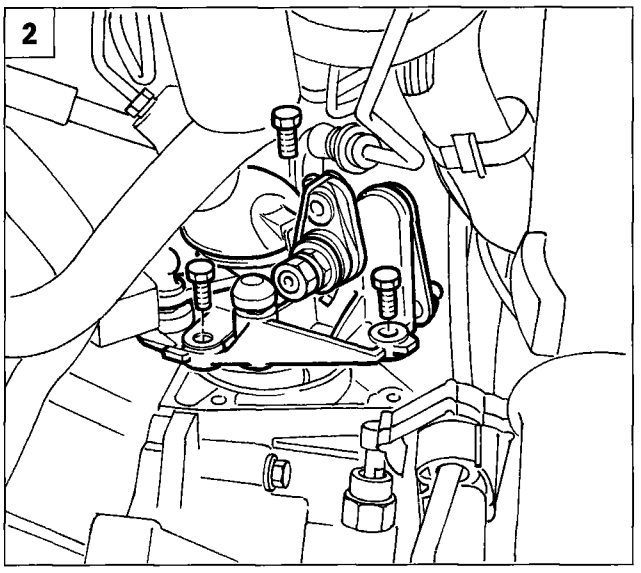

P4F063B02

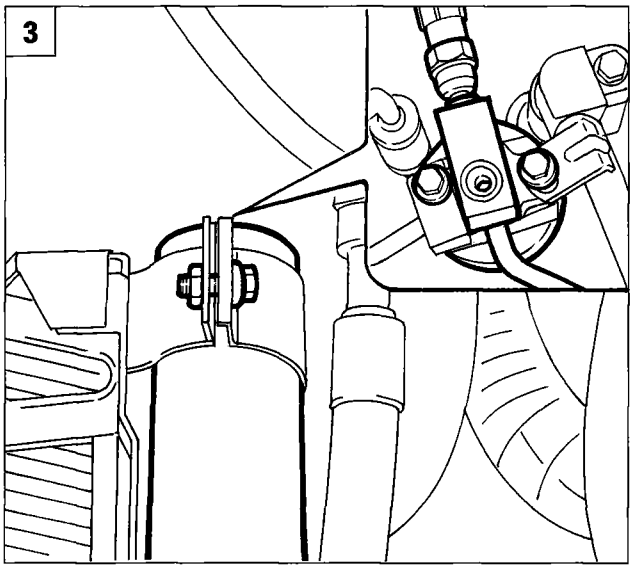

P4F063B03

1. Disconnect the earth cable from the gearbox bellhousing.
2. Set the gearbox to neutral, then undo the bolts illustrated and remove the gear selection unit.
3. Remove the dehydrating filter by undoing the attachments illustrated.
4. Using tool 1878077000 remove the button, undo the bolts and release the dust shield from its seating.
5. Working from under the wheelarch, undo the bolts (1) securing the clutch master cylinder mounting bracket.

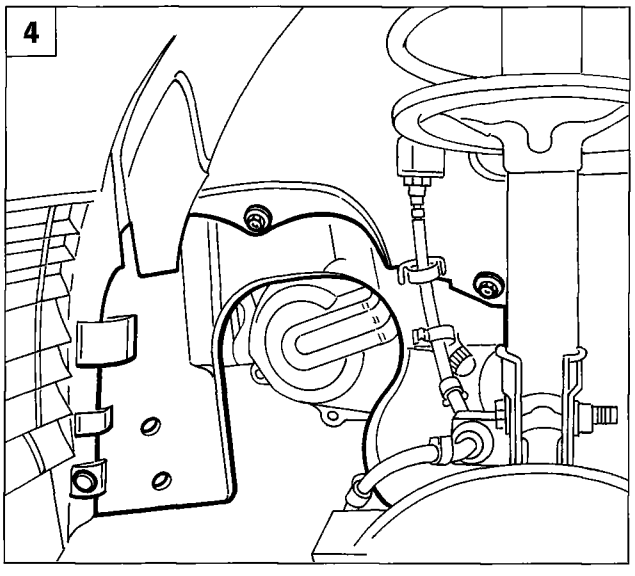

P4F003B02

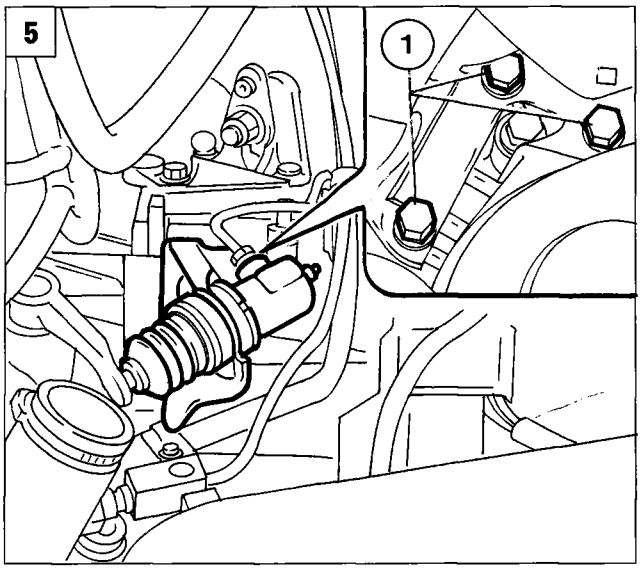

P4F063B04

21-27.

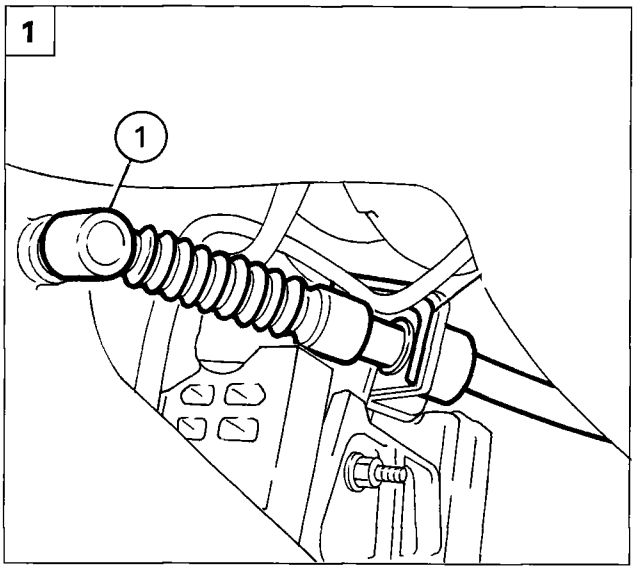

P4F064B01

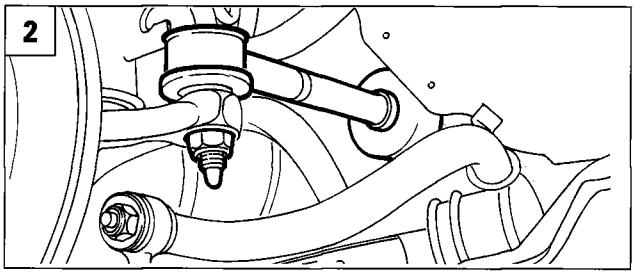

P4F002B05

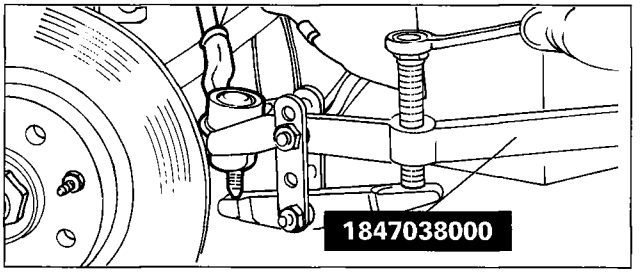

P4F002B06

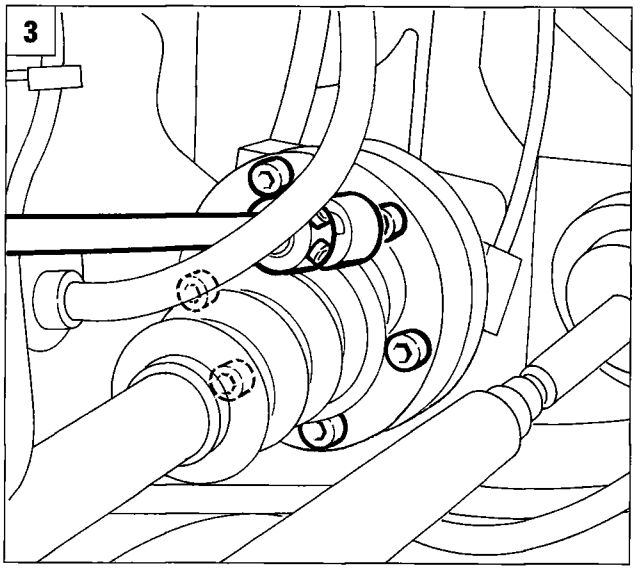

P4F039B01

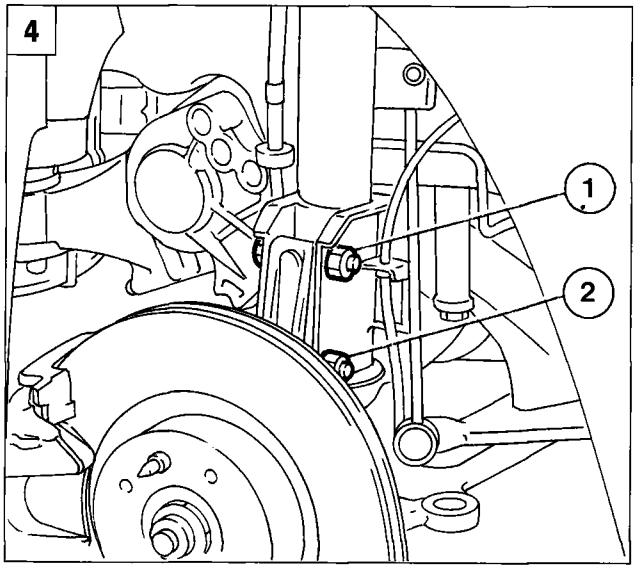

P4F064B02

1. Remove the head (1), then disconnect the gear engagement flexible cable and withdraw the gear selector assembly from the gearbox.

2. Undo the nut securing the tie rod end head, then using tool 1847038000 disconnect it from the vertical link.

3. Disconnect the drive shafts by undoing the bolts securing the constant velocity joint to the gearbox flange.

4. Undo the screw (1) and slacken the bolt (2) securing the suspension vertical link, then rotate the vertical link outwards, releasing the drive shaft from its engagement on the differential.

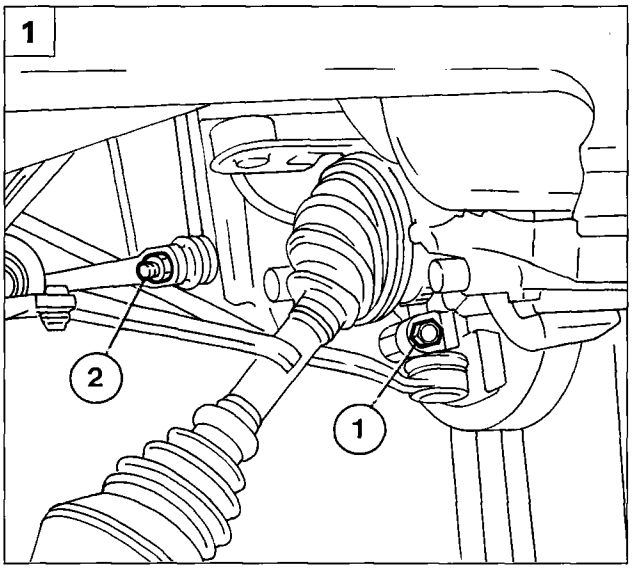

P4F065B01

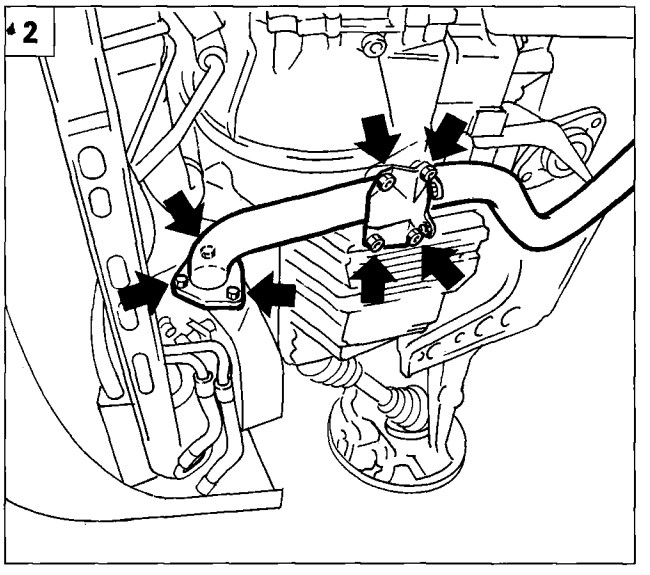

P4F065B02

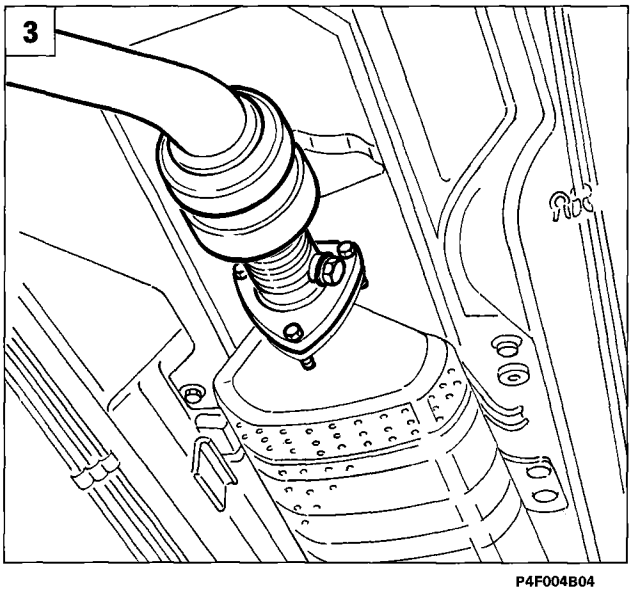

P4F004B04

1. Undo the screw (1) securing the wishbone to the hub, and the bolt (2) securing the anti-roll bar to the suspension link.

Repeat the same operations on the other drive shaft.

2. Remove the bolts securing the first section of the exhaust pipe to the manifold, and the bolts securing the anti-vibration bracket.
3. Remove the first section of the exhaust pipe from the catalytic converter.
4. Prepare a tray to collect the gearbox oil, then undo the plug indicated and drain the oil.
5. Remove the power unit central mounting.

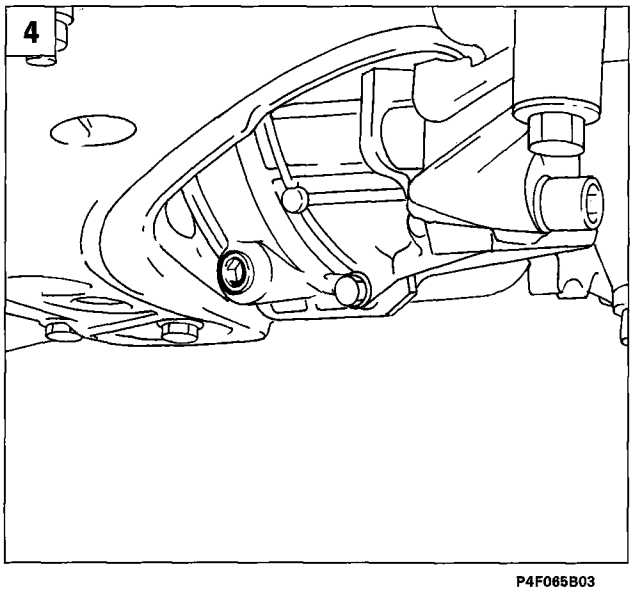

P4F065B03

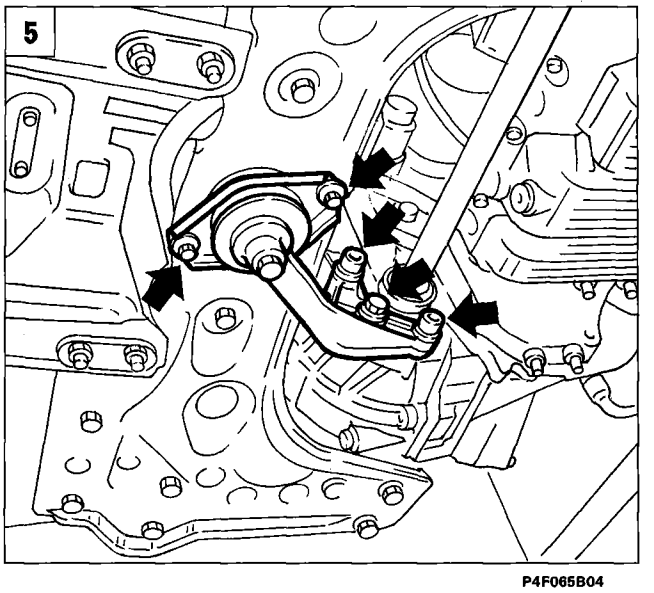

P4F065B04

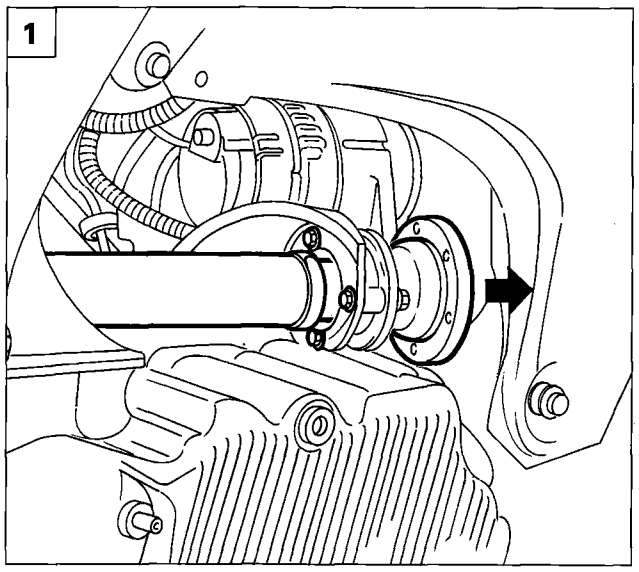

P4F040B02

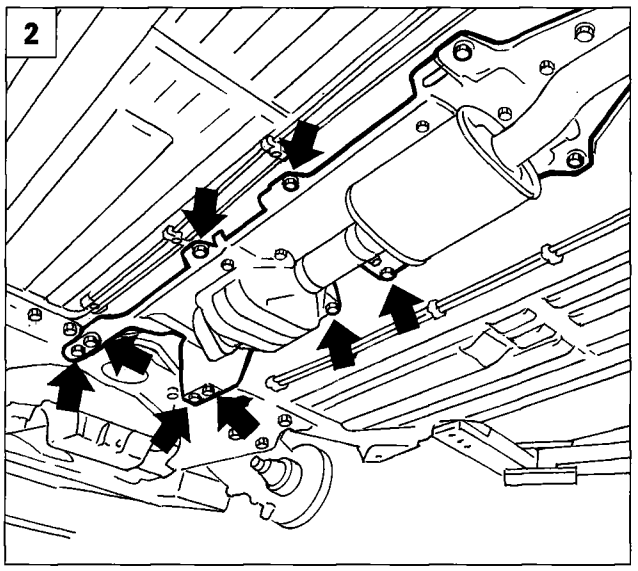

P4F066B01

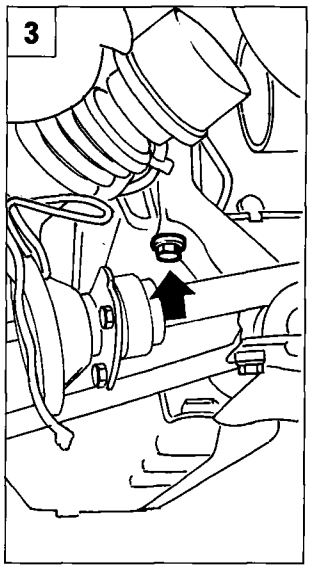

P4F066B02

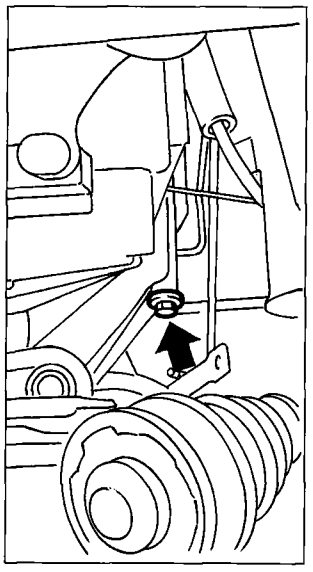

P4F066B03

1. Undo the bolts securing the intermediate shaft to the engine, release it from the gearbox and move it away from the working area, securing it as appropriate.
2. Remove the heat shield attachments shown, to permit subsequent withdrawal of the steering subframe.
3. Undo the side bolts securing the steering subframe to the body shell.
4. Undo the rear bolts securing the steering subframe to the body shell and steering box, then with the help of a second operator, withdraw the steering subframe complete with wishbones and anti-roll bar.
5. Disconnect the electrical connector from the speedometer tachometric sensor.

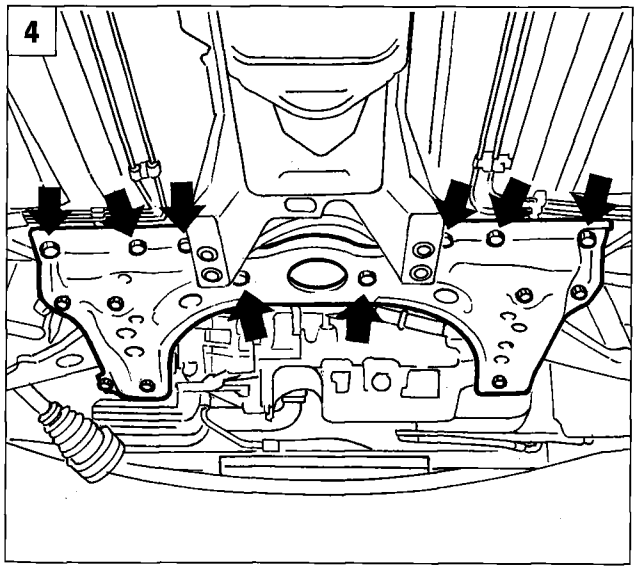

P4F066B04

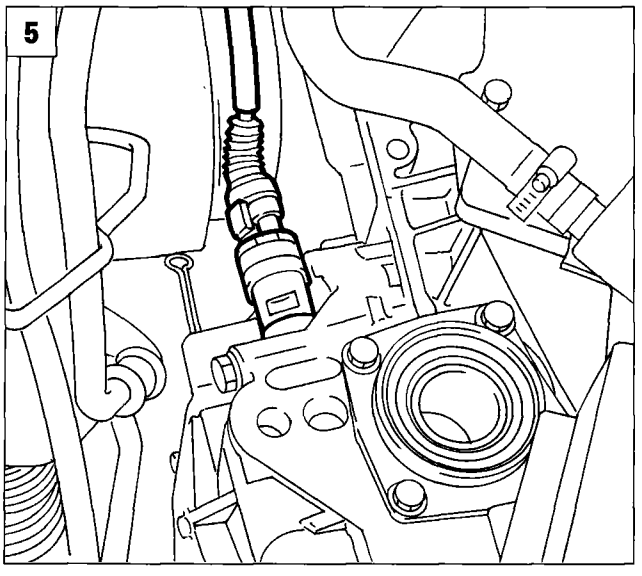

P4F066B05

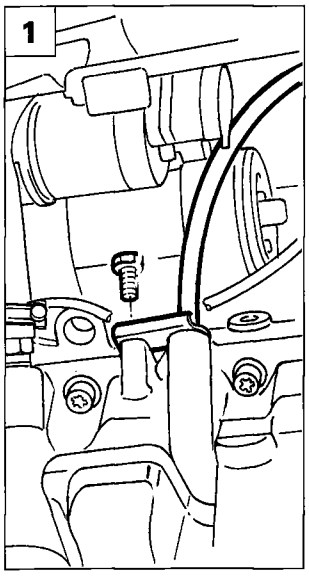

P4F067B01

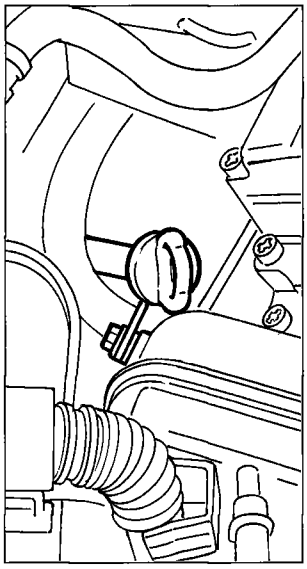

P4F067B02

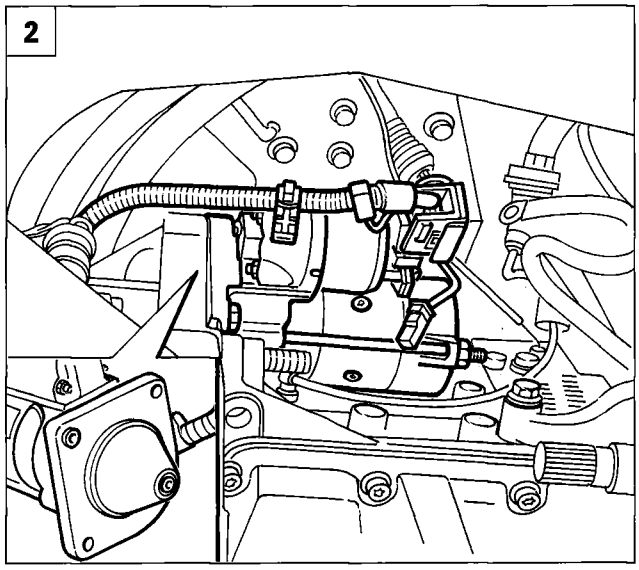

P4F041B01

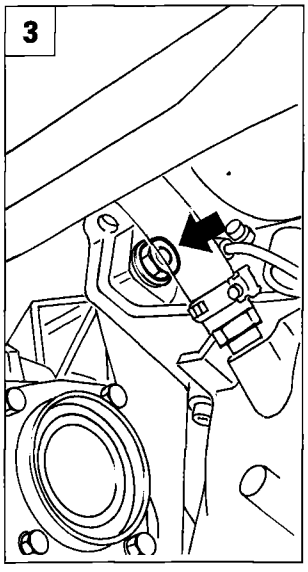

P4F067B03

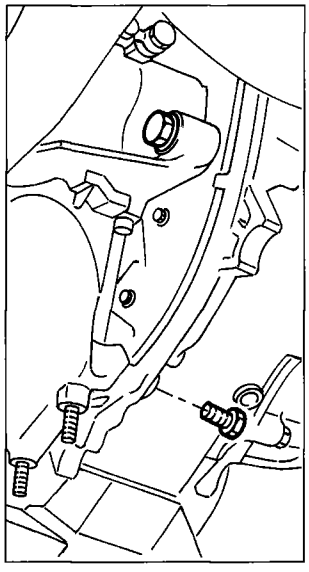

P4F067B04

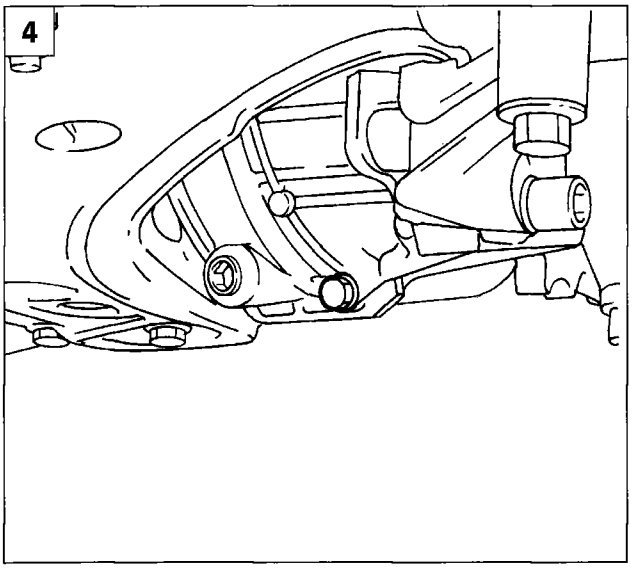

P4F067B05

1. Undo the bolts securing the engine oil dipstick, then remove the stick.
2. Undo the bolts securing the starter motor to the gearbox, then move it aside, securing it as appropriate.
3. Undo the bolts indicated, securing the gearbox bellhousing to the engine block.
4. Remove the bolt illustrated, so that the tool for supporting the gearbox during removal may be fitted.

21-27.

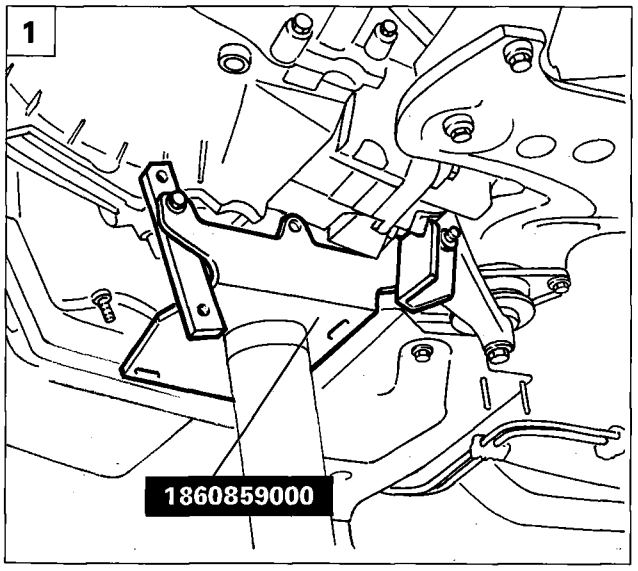

P4F068B01

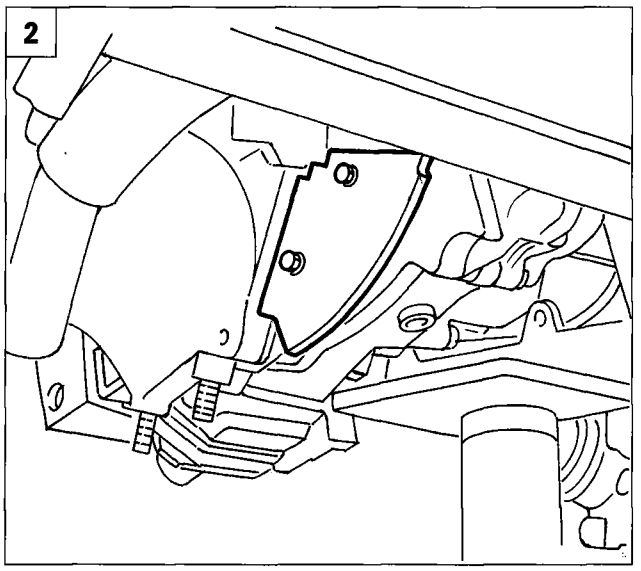

P4F068B02

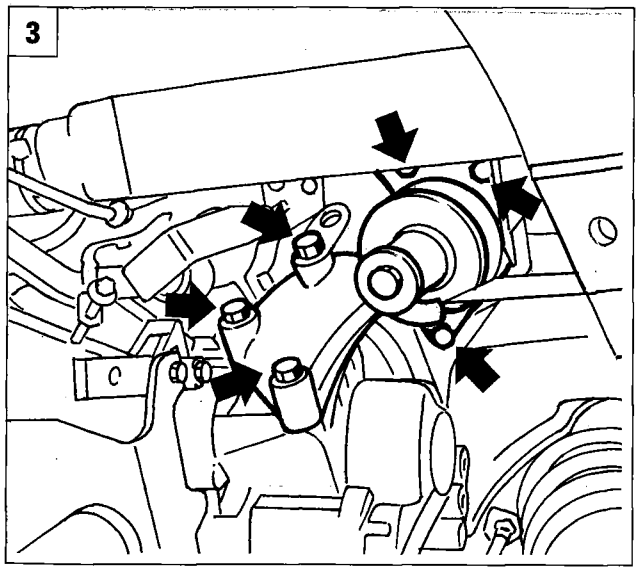

P4F068B03

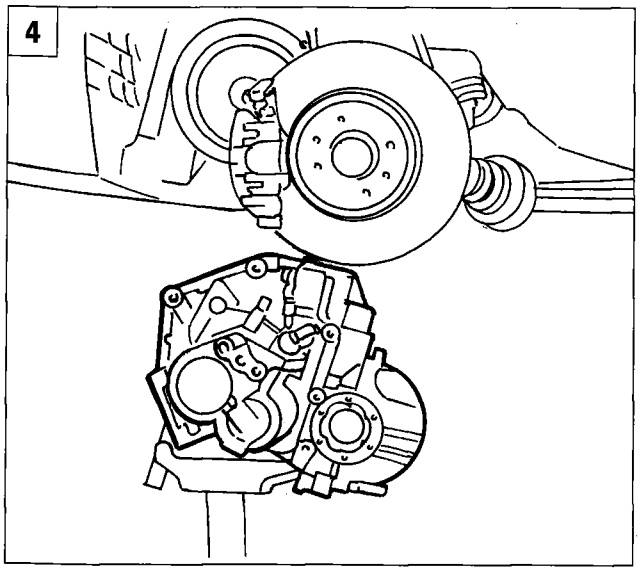

P4F068B04

1. Fit the tool 1860859000 and brackets previously made for supporting the gearbox on the hydraulic jack, then secure it to the gearbox at the points indicated.

2. Remove the guard shown in the figure from the bottom of the gearbox.

3. Remove the engine mounting, gearbox side, undoing the attachment bolts indicated.

4. Turn the screw on the engine support cross beam, gently lower the engine and manoeuvre the hydraulic jack as appropriate to release the gearbox from the attachment pins and surrounding parts. Gradually lower the jack and withdraw the gearbox - differential unit.

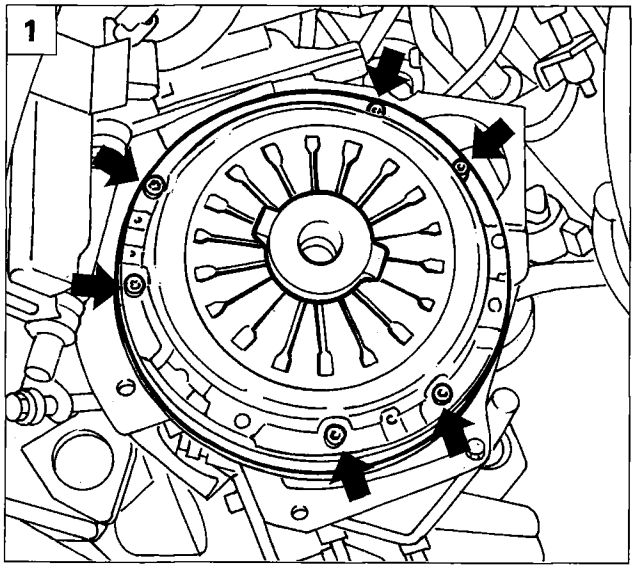

P4F069B01

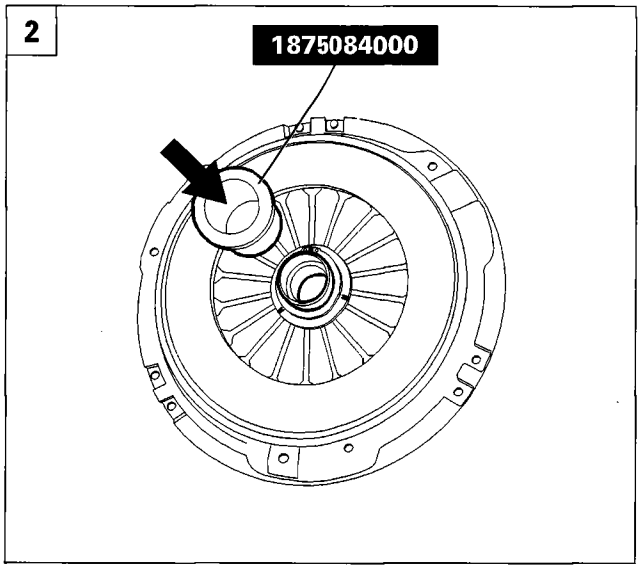

P4F069B02

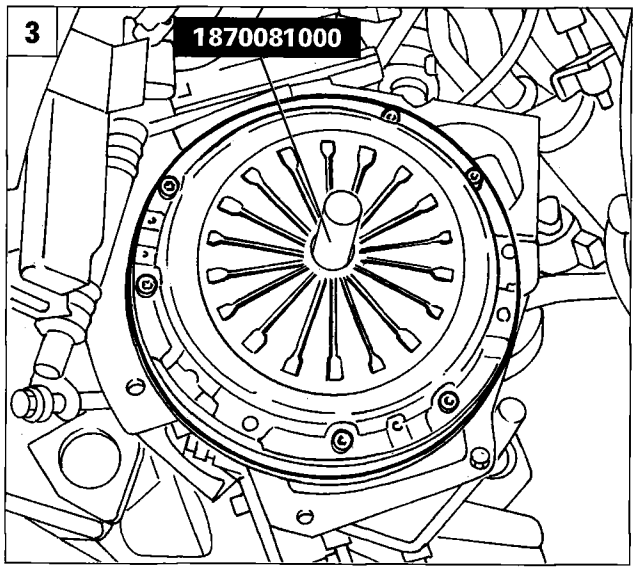

P4F069B03

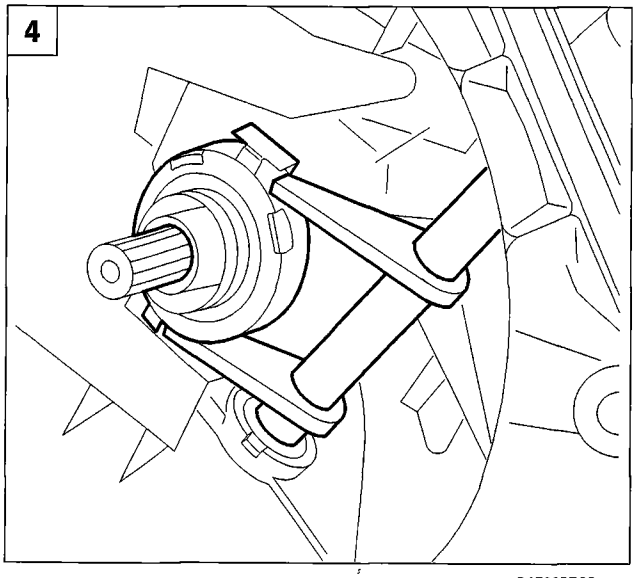

P4F008B02

Refitting

1. Remove the clutch assembly complete with clutch release bearing.
2. Using tool 1875084000, remove the clutch release bearing from the clutch spring, checking that the bearing is not stiff or noisy, otherwise it will have to be replaced.
3. Fit the clutch assembly using the clutch centring tool 1870081000.
4. Fit the clutch release bearing on the gearbox main shaft sleeve.

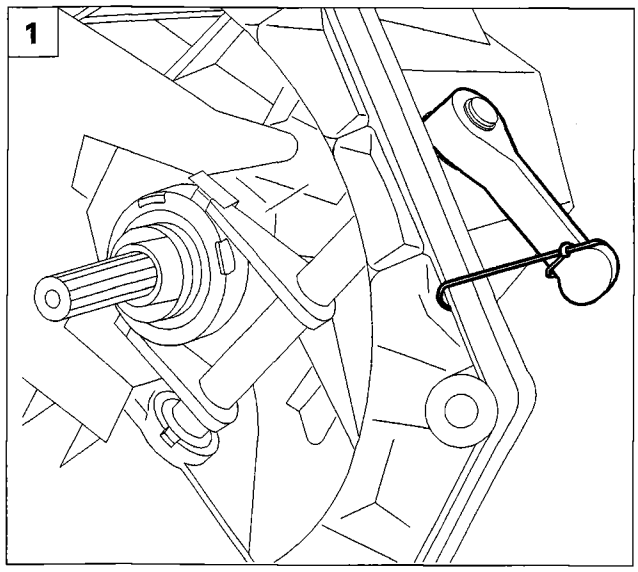

P4F070B01

1. Secure the clutch release lever as appropriate, positioning it as illustrated in the figure.

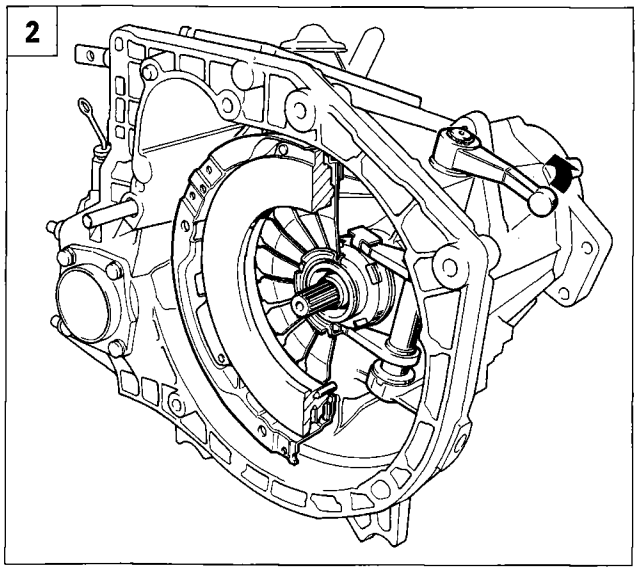

P4F070B02

When refittng the flexible cables to the gearbox, follow the procedure described in the "Gear selector linkage" section.

2. Refit the gearbox differential unit, securing it to the engine block, then push the clutch release lever strongly in the direction indicated by the arrow, so as to hook the clutch release bearing onto the clutch spring.

For the remaining refitting operations, reverse the procedure for removal.

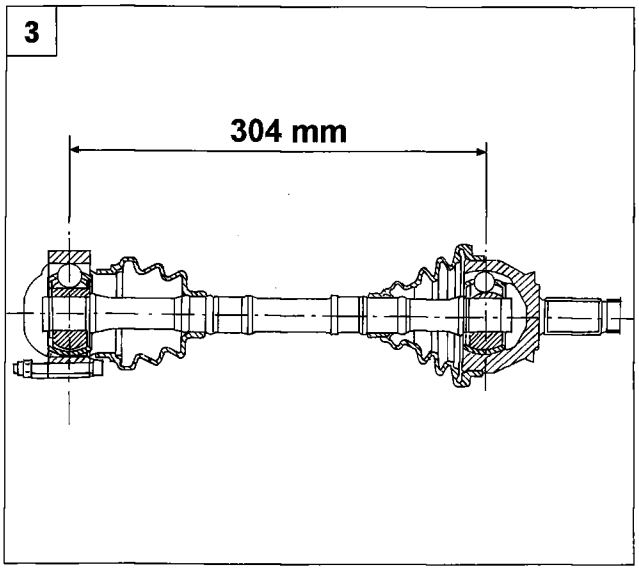

P4F070B03

REMOVING - REFITTING DRIVE SHAFTS

To remove and refit, dismantle and reassemble the drive shafts, refer to the procedure described for the 1747 16v. engine. When refitting the drive shafts, check that the dimension given in the figure is observed in the drive shaft - constant velocity joints coupling.

When refitting the constant velocity joint, wheel side, it must be connected to a category 2 or white category 3 splined shaft.

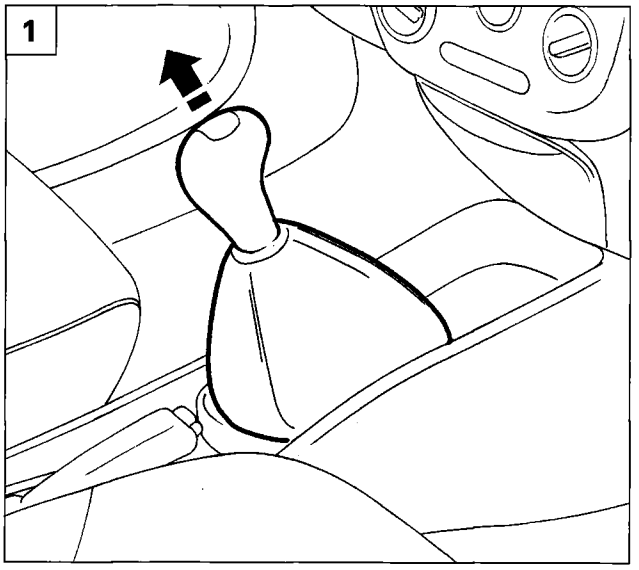

P4F015B01

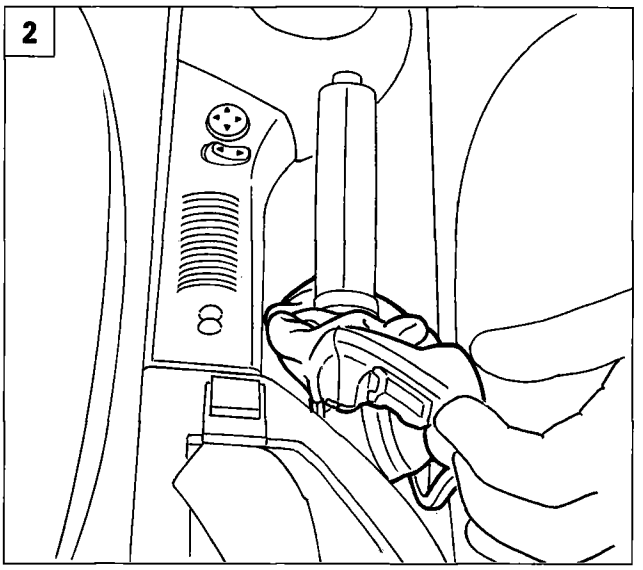

P4F071B01

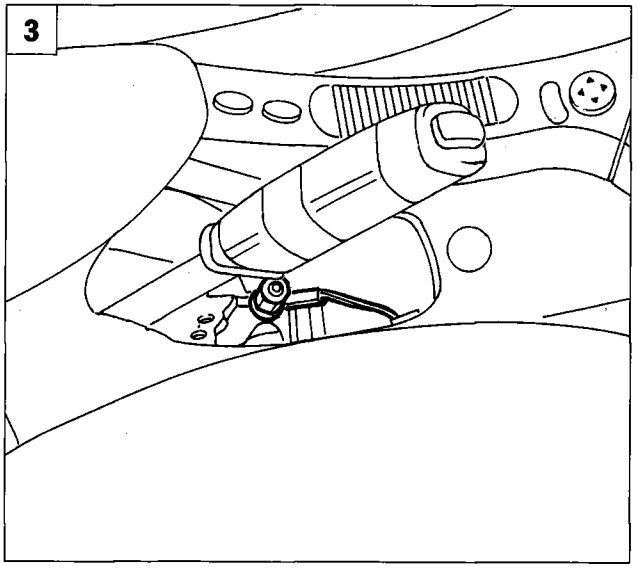

P4F071B02

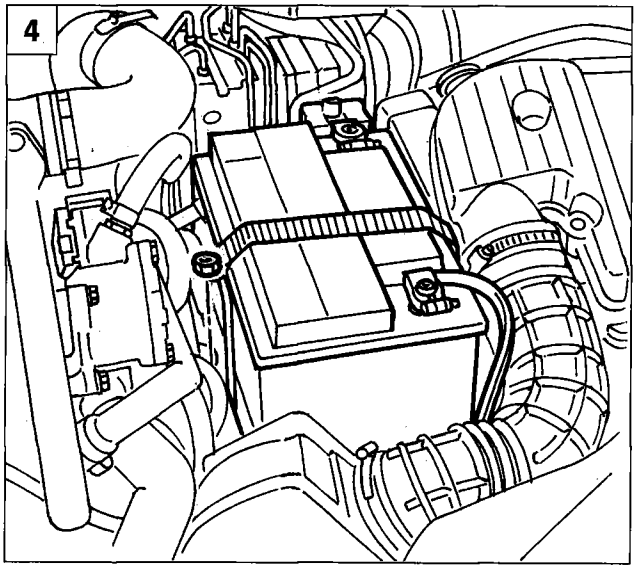

P4F060B01

REMOVING - REFITTING

Disconnect the battery's negative pole, then proceed as described below.

1. Working from inside the car, remove the gear lever gaiter, without removing the gear lever knob.
2. Remove the handbrake protective gaiter.
3. Disconnect the wiring connection illustrated and undo the handbrake adjustment nut.
4. Place the car on ramps, remove the front wheels, disconnect the positive pole, undo the nut illustrated, then remove the battery.

21-27.

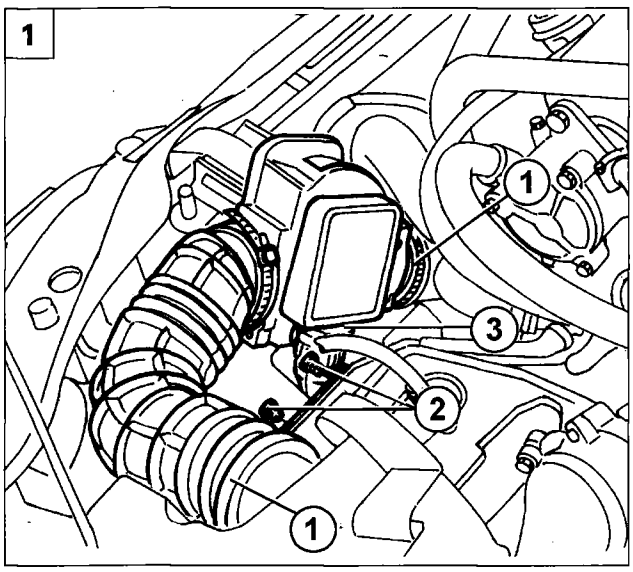

P4F060B02

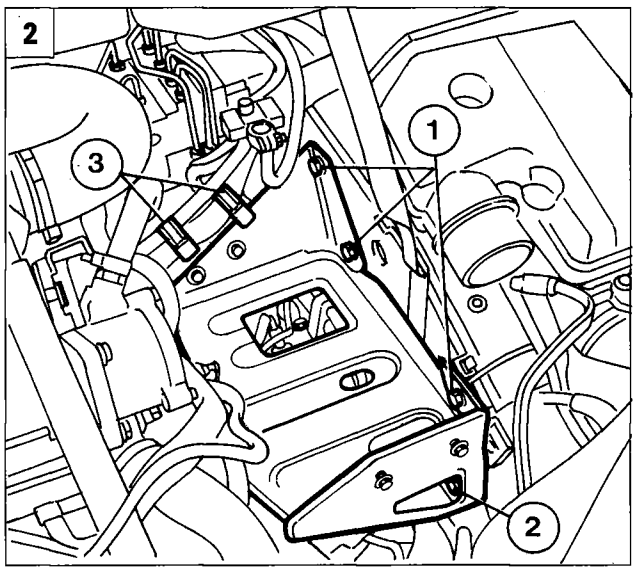

P4F060B03

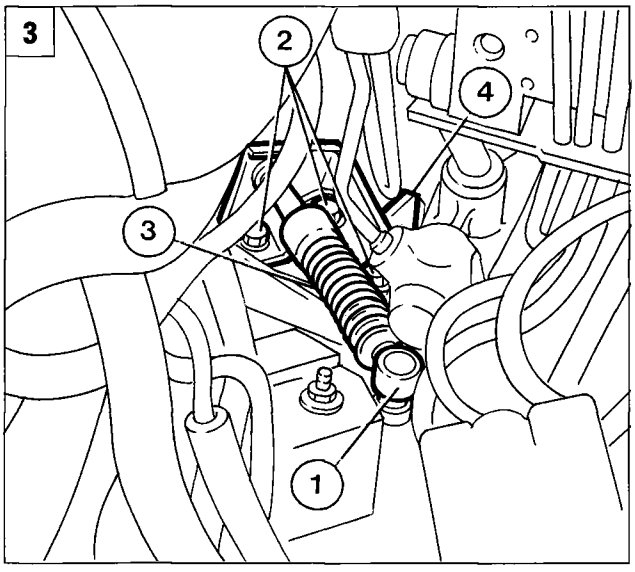

P4F061B02

1. Undo the two clips (1), undo the bolts (2), disconnect the connector (3), then remove the intake air duct complete with flowmeter.
2. Undo the bolts (1), slacken the bolt (2), open the clips (3) releasing the engine wiring, then remove the battery cage.
3. Remove the head (1) from its balljoint, undo the bolts (2), then move aside the gear selection cable (3) complete with mounting bracket (4).
4. Raise the ramps and remove the engine compartment bottom guard.
5. Using tool 1878077000, remove the button, undo the bolts and release the dust shield from its seating.

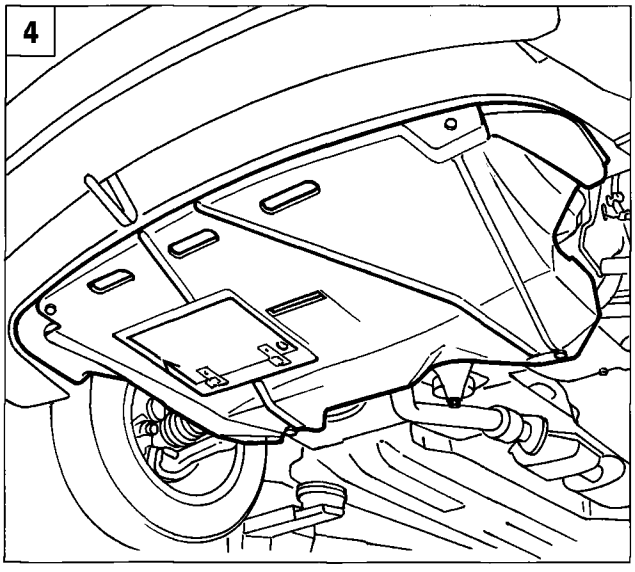

P4F003B01

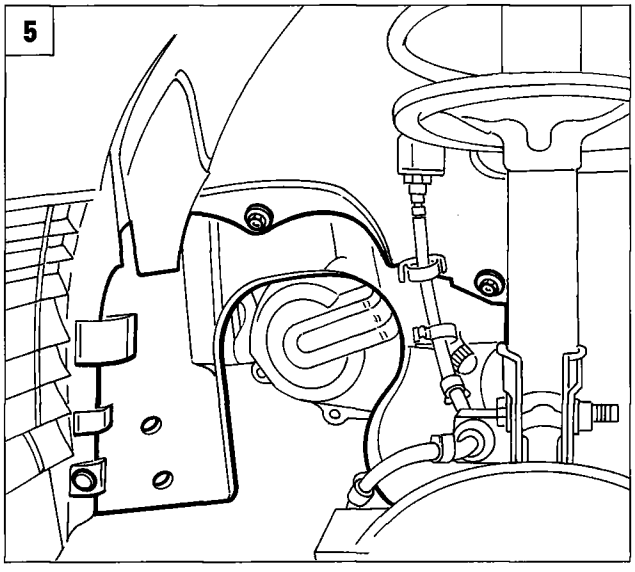

P4F003B02

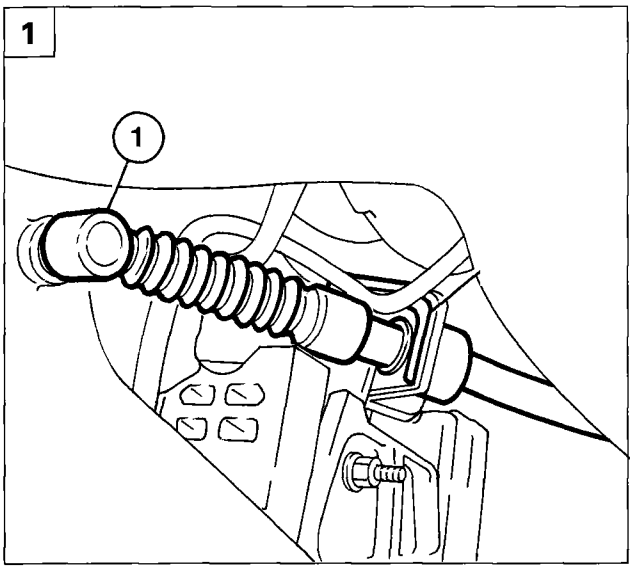

P4F064B01

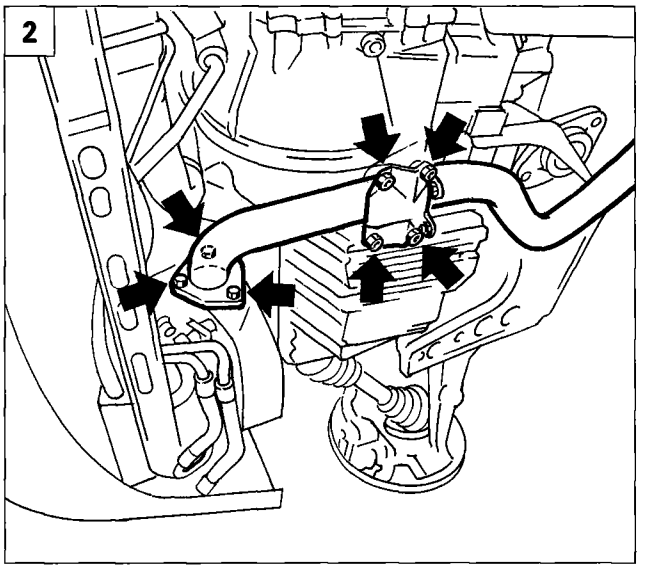

P4F065B02

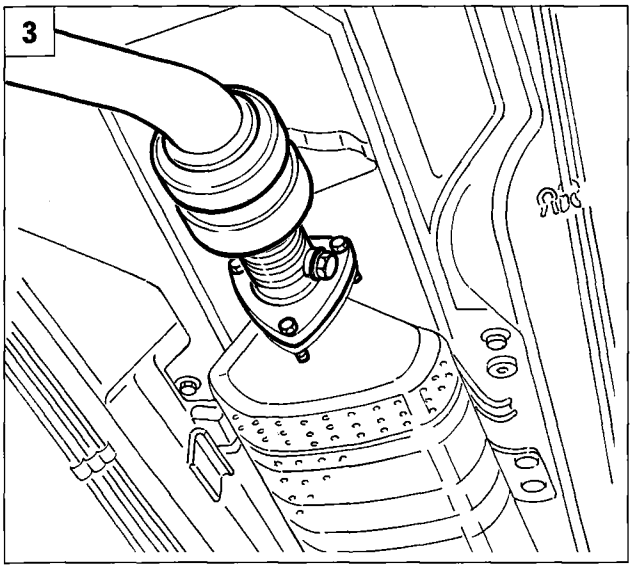

P4F004B04

1. Remove the head (1), then disconnect the gear engagement flexible cable from the gearbox and withdraw the gear selector unit from the gearbox.
2. Remove the bolts securing the first section of the exhaust pipe to the manifold, and the bolts securing the anti-vibration bracket.
3. Remove the first section of the exhaust pipe from the catalytic converter.
4. Disconnect the handbrake cables from the mounting and release them from the bracket.
5. Release the exhaust pipe from the rubber mounting indicated.

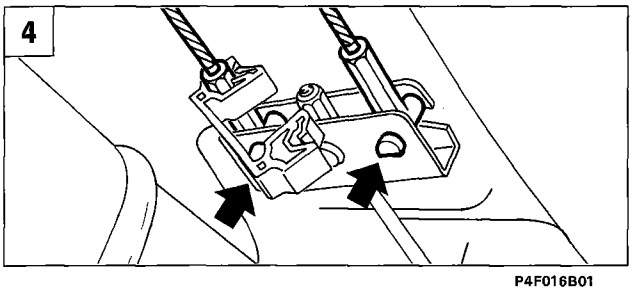

P4F016B01

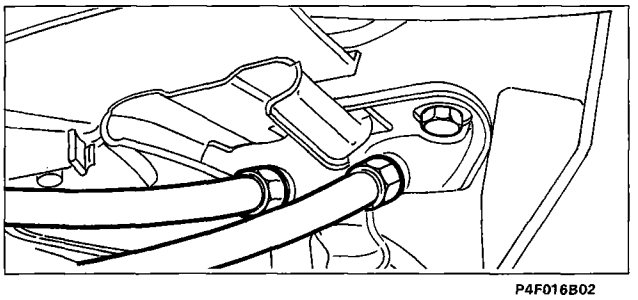

P4F016B02

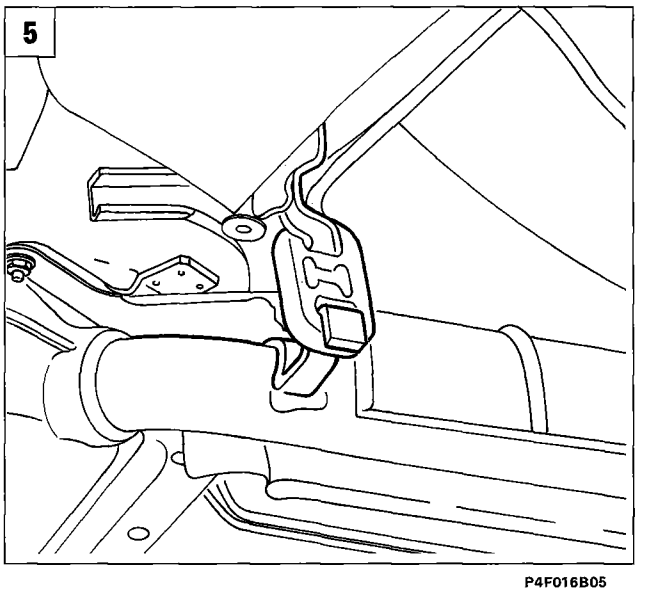

P4F016B05

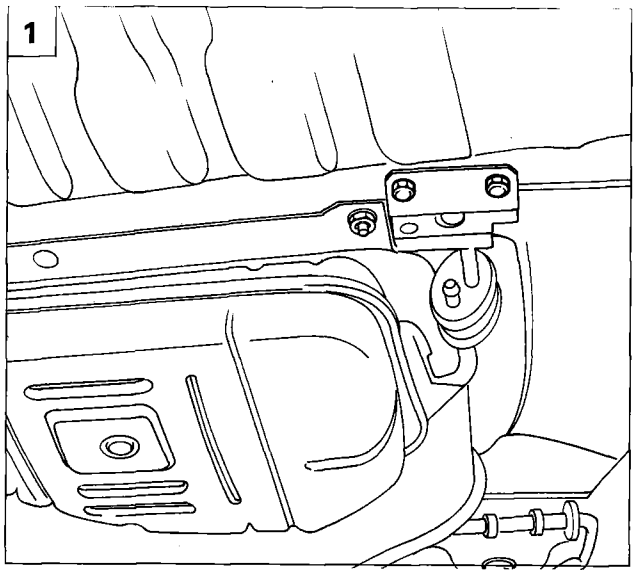

P4F016B04

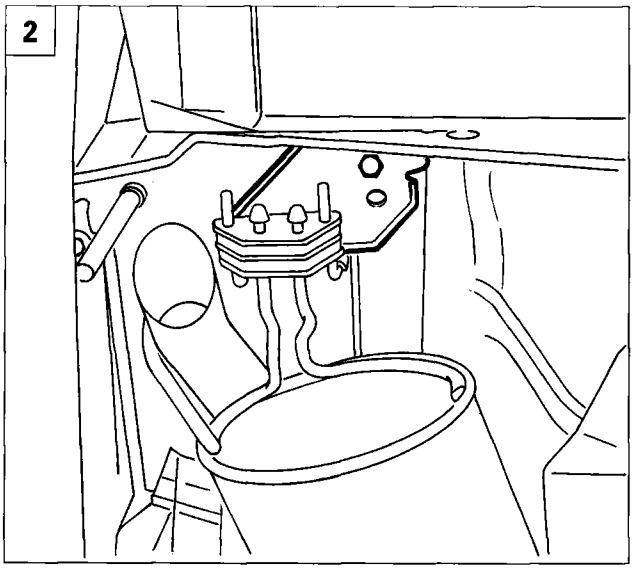

P4F017B01

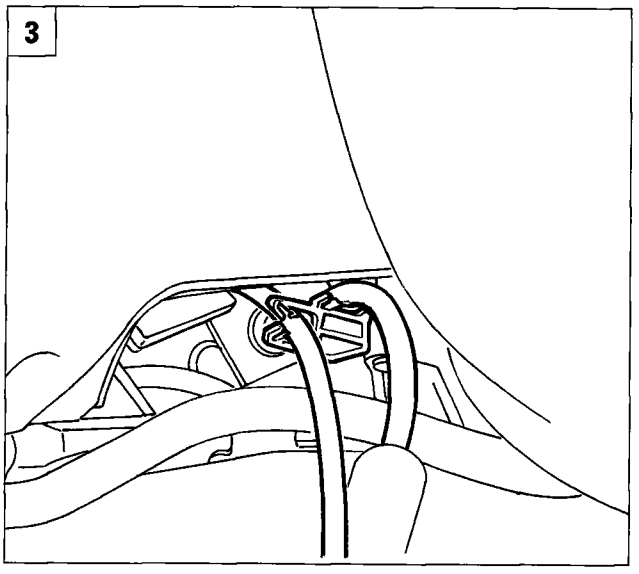

P4F074B01

1. Undo the bolts securing the exhaust pipe front mounting bracket.
2. Undo the bolt securing the exhaust pipe rear mounting bracket, then withdraw the pipe from the car.
3. Open the clip indicated and release the two flexible transmission cables.

4.5. Undo the bolts indicated, place a hydraulic jack under the heat shield, then slowly lower the gear selector linkage assembly and withdraw it from the car.

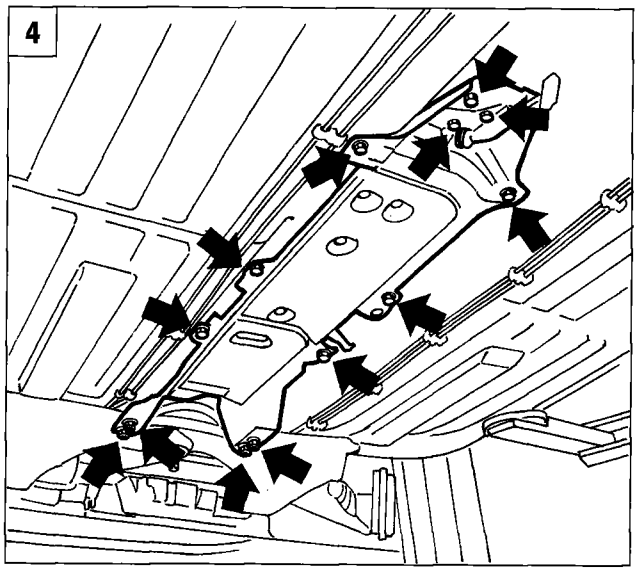

P4F074B02

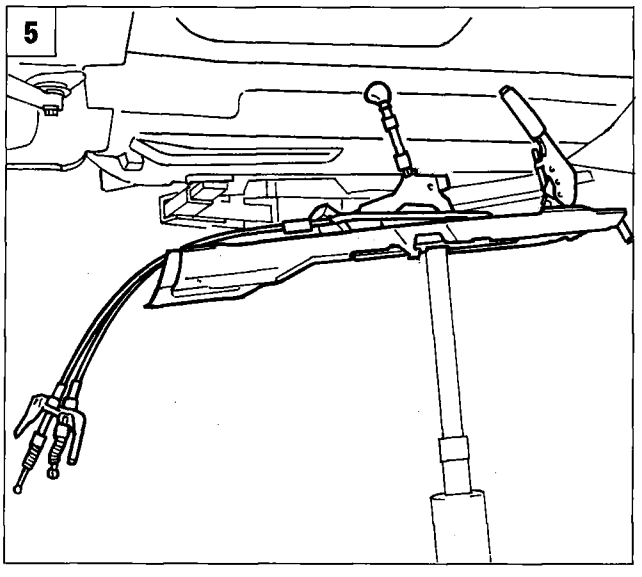

P4F074B03

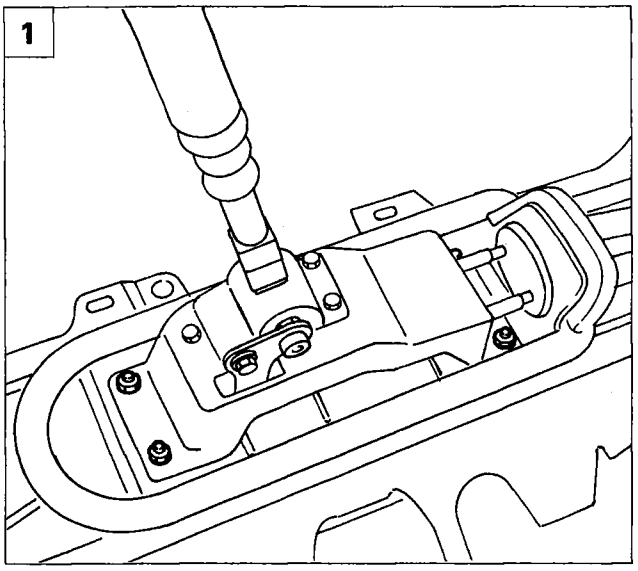

P4F075B01

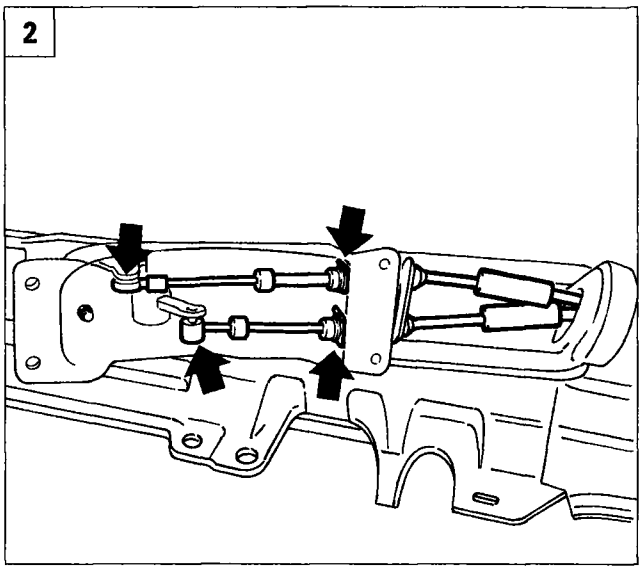

P4F075B02

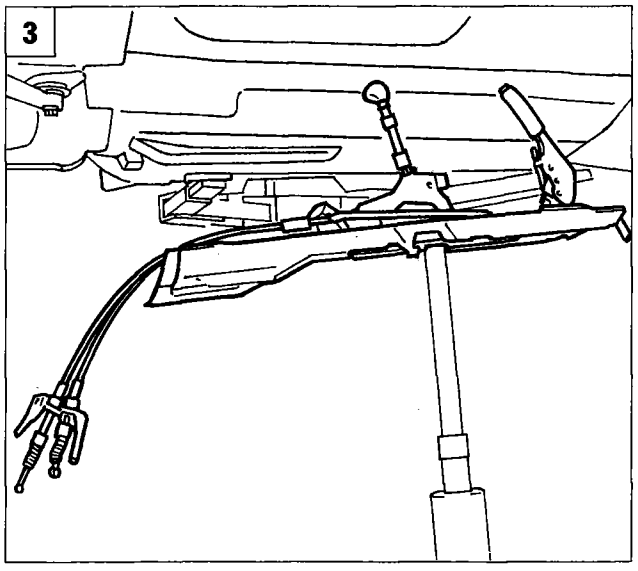

P4F074B03

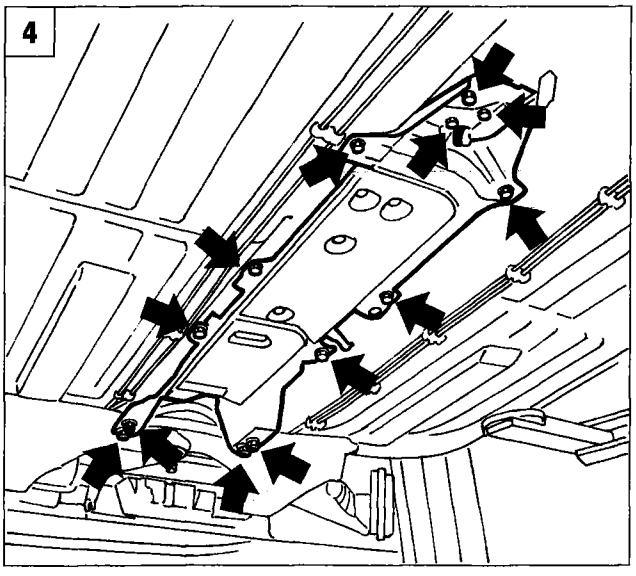

P4F074B02

DISMANTLING AT THE BENCH

Removing flexible transmission cables

1. Undo the nuts securing the gear selector linkage to its mounting.
2. Disconnect the two flexible cables from the gear change lever, then remove them by withdrawing them from the rubber buffer illustrated, after removing the retaining clip.

Refitting and adjusting gear selection and engagement flexible transmission cables

2. Secure the heads of the new transmission cables to the joints on the relevant linkages, and secure them to the assembly using the clips at the points indicated. Then refit the gear lever assembly to the mounting as illustrated in point 1.

3. Using a hydraulic jack and a second operator, refit the gear selctor linkage in its seating and secure it to the body shell.

4. Tighten the bolts indicated, previously slackened, to the specified torque.

21-27.

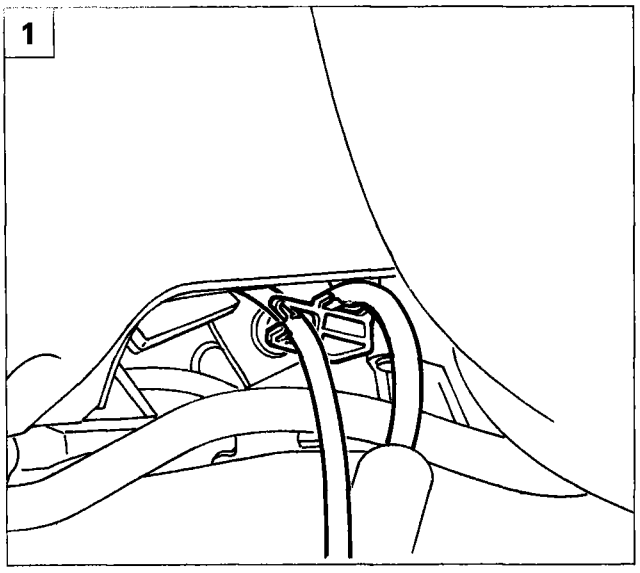

P4F074B01

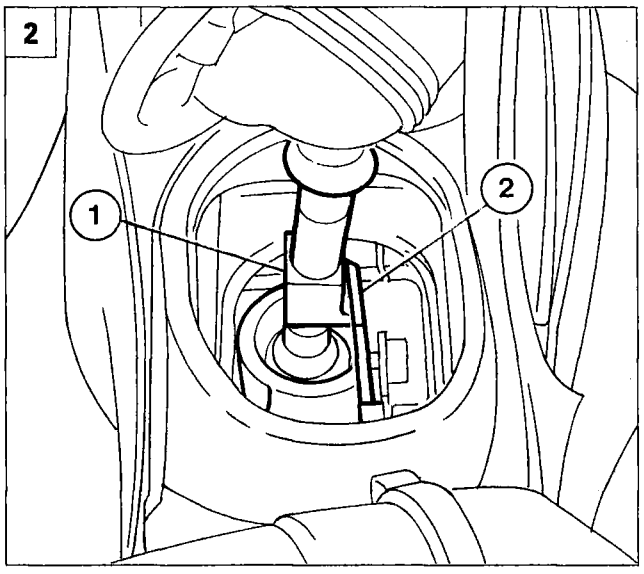

P4F077B01

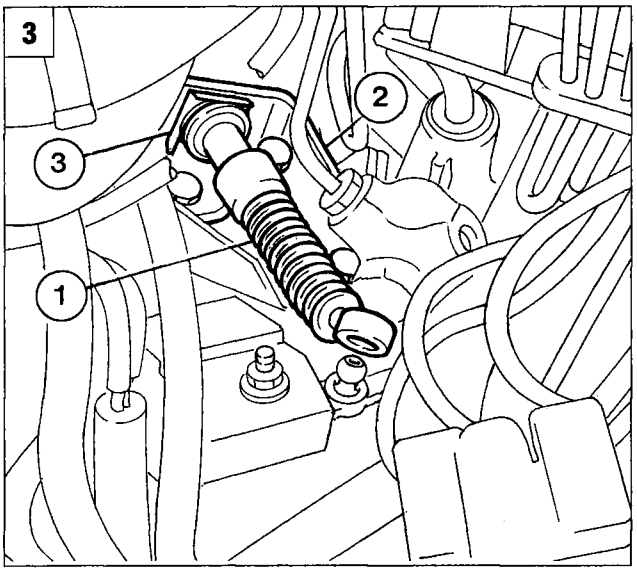

P4F078B01

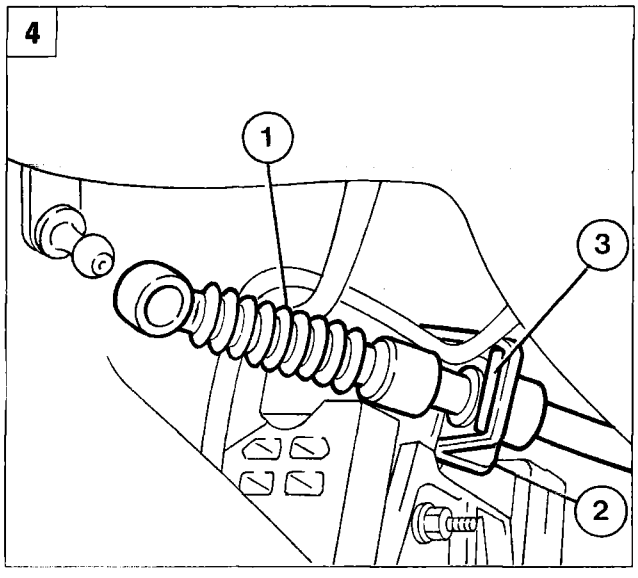

P4F078B02

1. Fasten the two flexible transmission cables to the mounting on the steering box using the clips illustrated.

2. Lower the ramps and, working from inside the car, position the gear change lever (1) home against the surface (2) of the inhibition device, thus moving it to the position for selecting 5th gear, then lock it.

3. Secure the gear engagement cable (1) on its mounting bracket (2) on the gearbox using the clip (3).

4. Secure the gear selection cable (1) on its mounting bracket (2) on the gearbox using the clip (3).

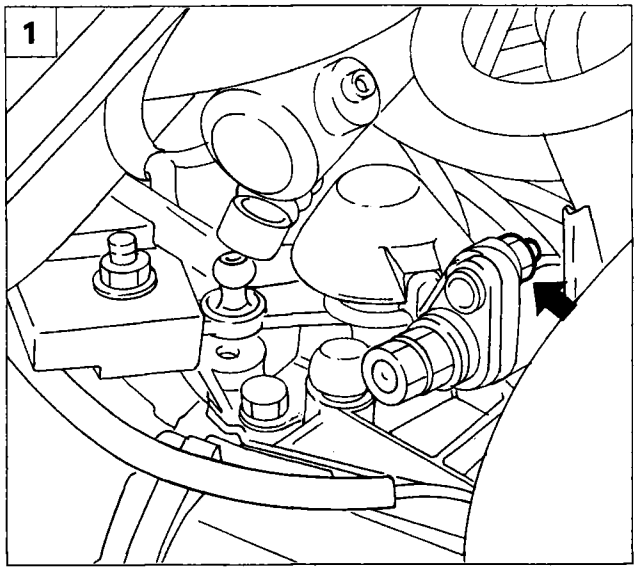

P4F078B03

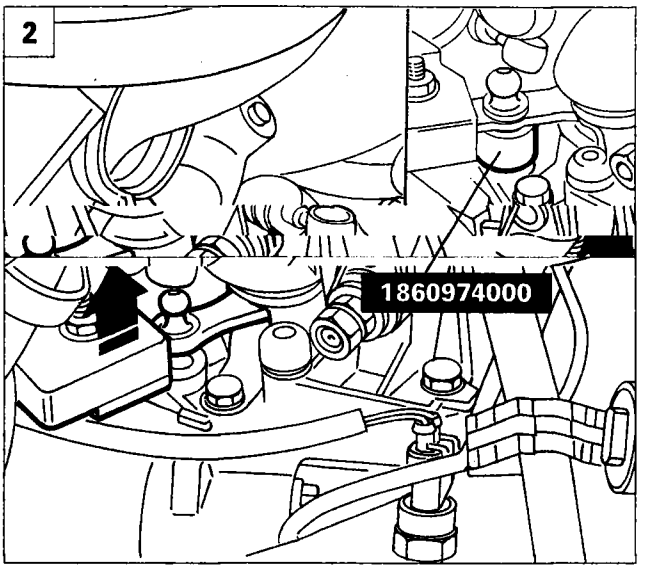

P4F078B04

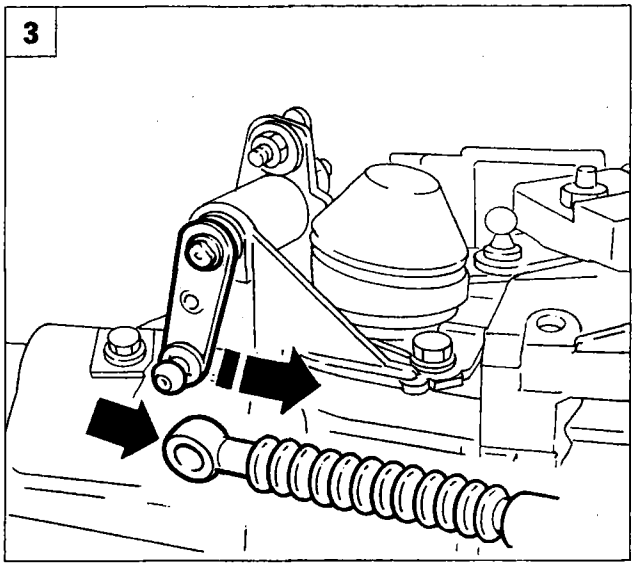

P4F079B01

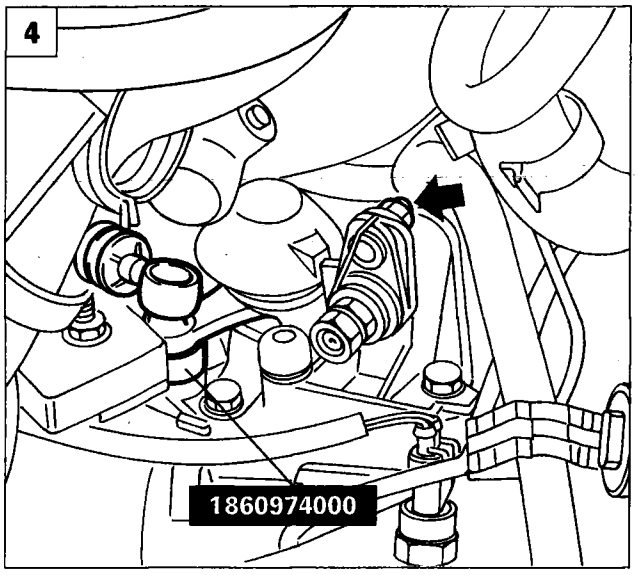

P4F078B05

1. Slacken the nut (arrowed) on the gear selector unit.

2. Raise the gear engagement unit and fit tool 1860974000 as illustrated in the figure. In this position the gearbox has 5th gear selected.

3. Operate the selector linkage until the head of the flexible transmission can be fitted on the balljoint located on the linkage. The spring inside the linkage will recover any play, thus automatically adjusting the flexible transmission.

4. Tighten the nut on the selector unit previously slackened, disengage the gearchange lever from the 5th gear position and move it to neutral, then fit the head of the flexible transmission on the corresponding balljoint on the lever.

21-27.

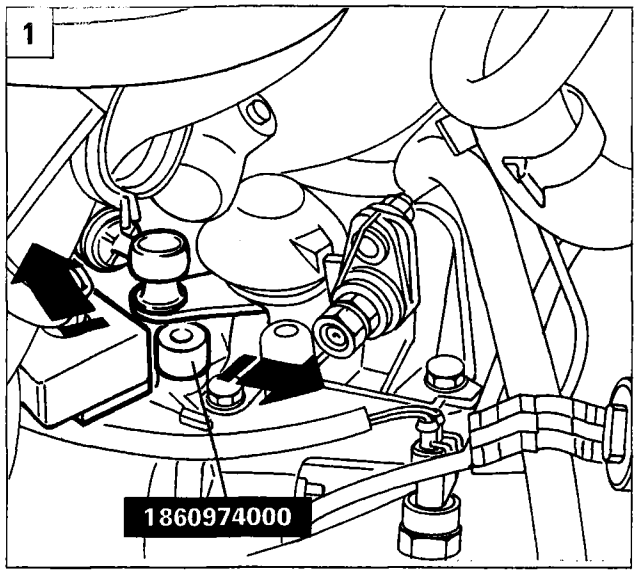

P4F079B03

1. Move the gear change lever to reverse gear position, then remove the tool 1860974000 fitted previously. Refit the remaining parts by reversing the procedure for removal.

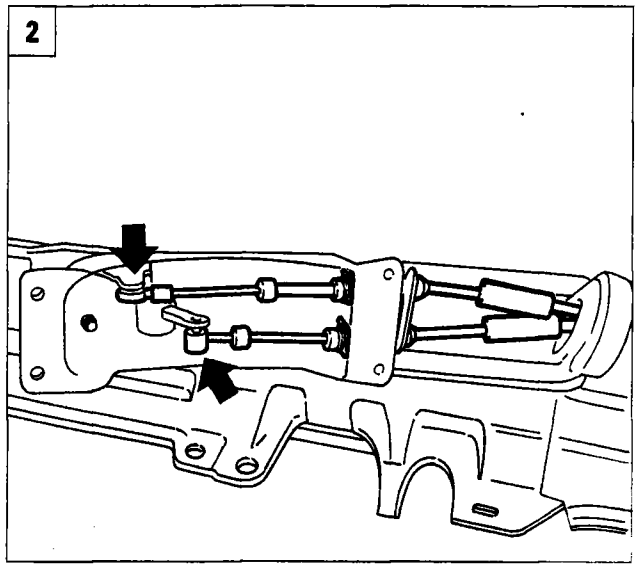

P4F075B03

Removing - refitting gear change lever

2. After separating the gear selector linkage assembly from its mounting, disconnect the two flexible transmission cables from the gear change lever.

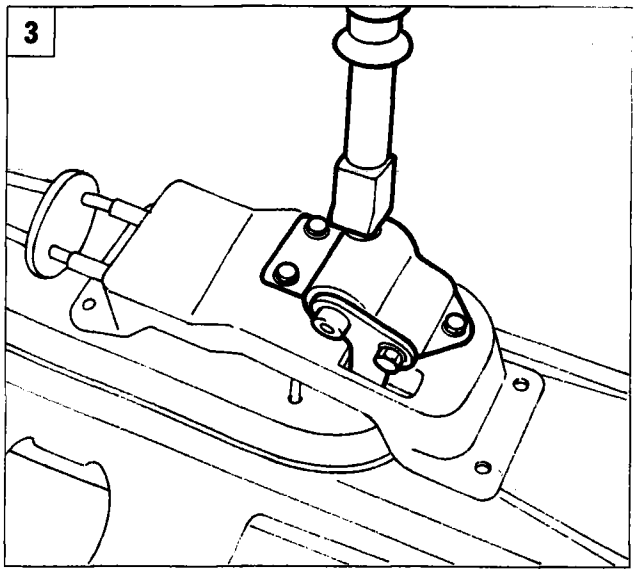

P4F075B04

3. Undo the bolts illustrated, then remove the lever complete with mounting.

DIAGRAM OF GEAR SELECTOR LINKAGE

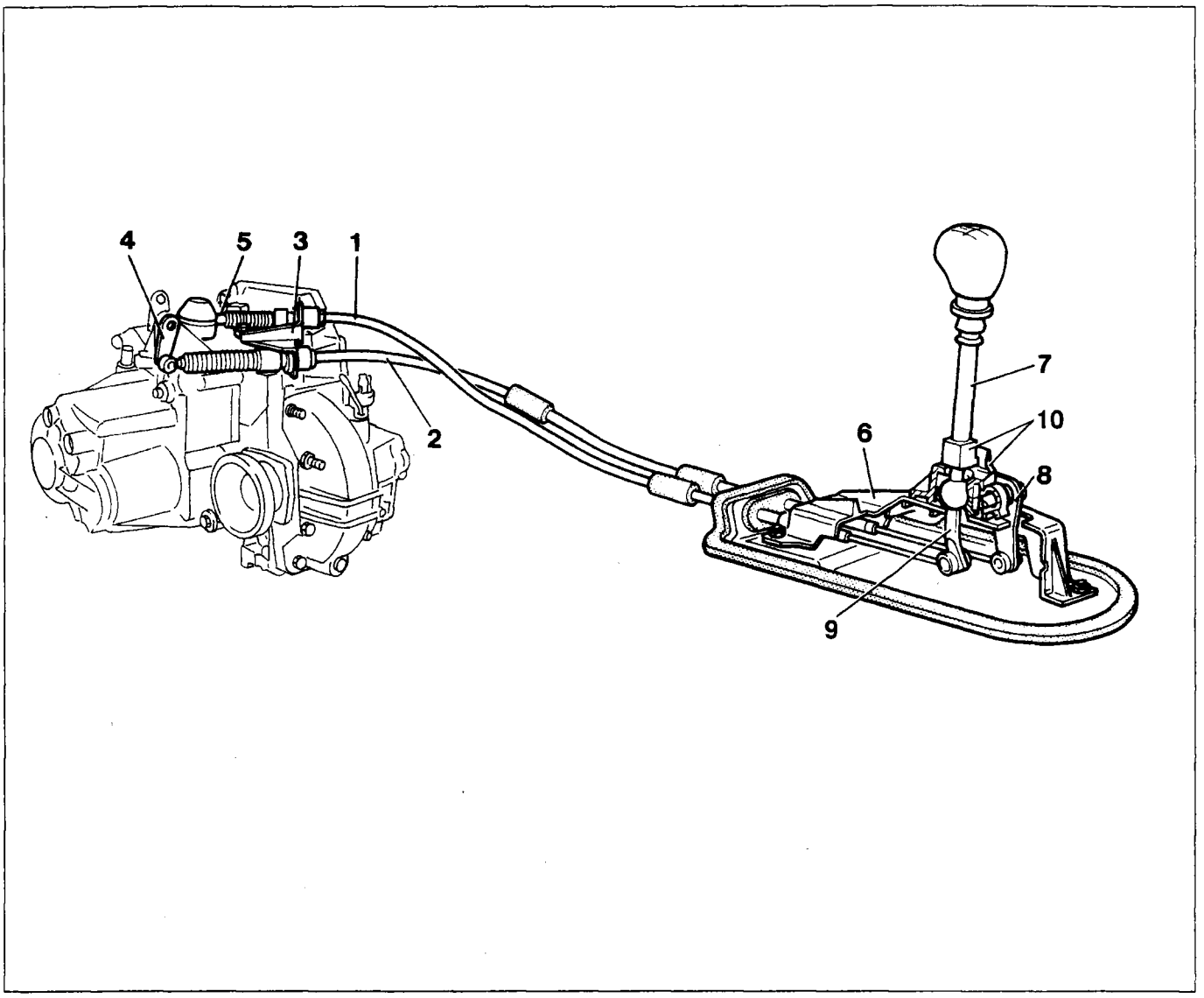

P4F076B01

1. Gear engagement flexible transmission cable
2. Gear selection flexible transmission cable
3. Flexible transmission mounting bracket
4. Selection linkage on gearbox
5. Engagement linkage on gearbox
6. External linkage mounting
7. Gear change lever
8. Selection linkage on lever
9. Leveraggio di innesto su leva
10. Reverse inhibitor

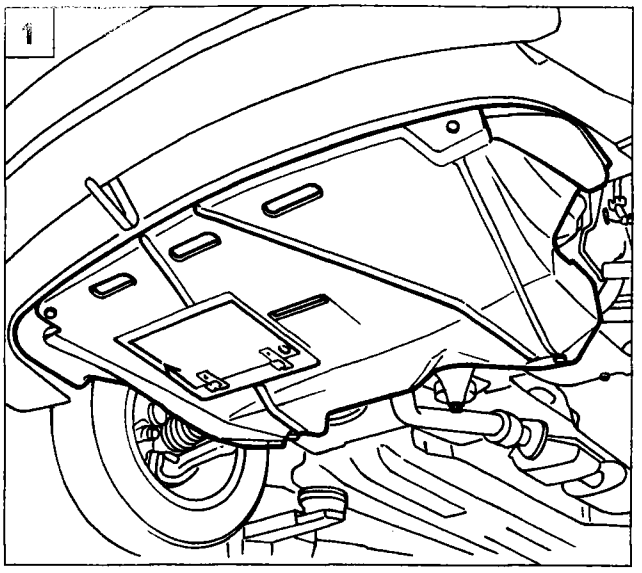

P4F003B01

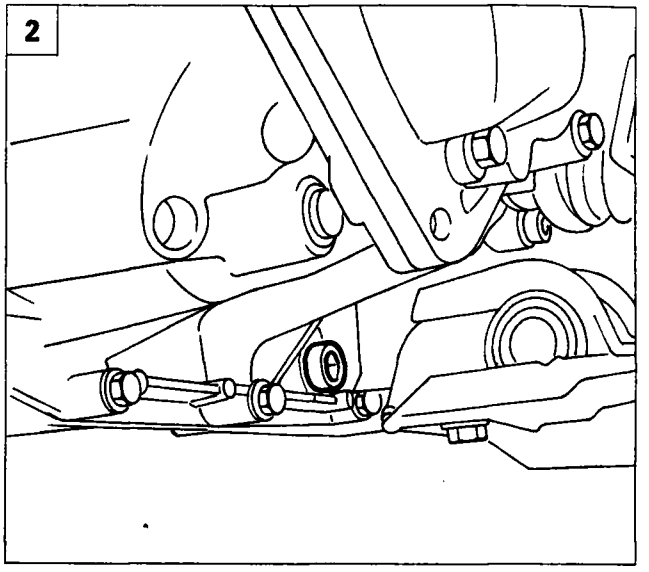

P4F080B01

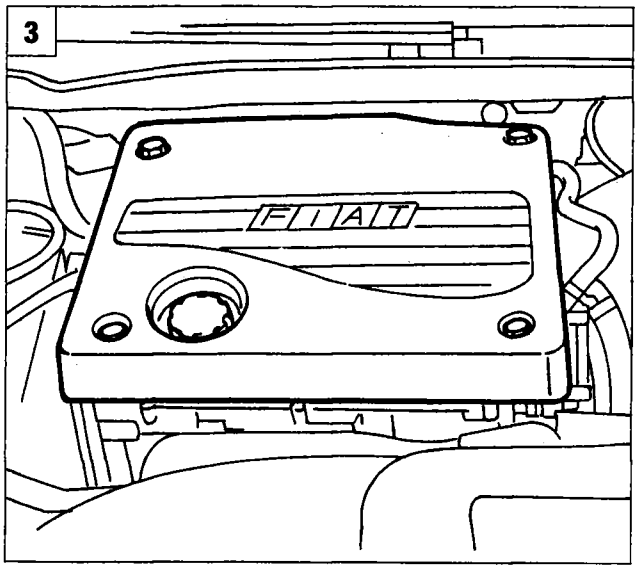

P4F01EX01

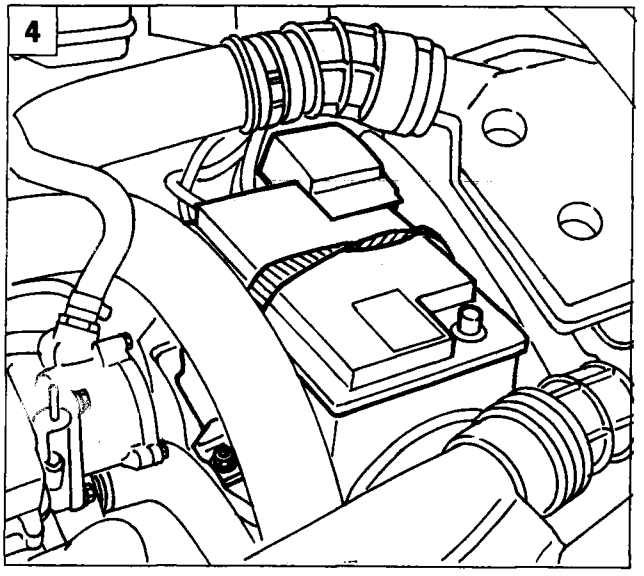

P4F01EX02

REMOVING - REFITTING GEARBOX AND DIFFERENTIAL

Place the car on ramps, remove the front wheels and disconnect the battery's negative terminal, then proceed as described below.

1. Remove the engine bottom guard.
2. Prepare a container for collecting the gearbox oil, then undo the plug indicated and drain the gearbox oil.
3. Remove the engine top guard.
4. Disconnect the battery's positive pole, undo the nut securing the battery to its cage, then remove it from the engine compartment.

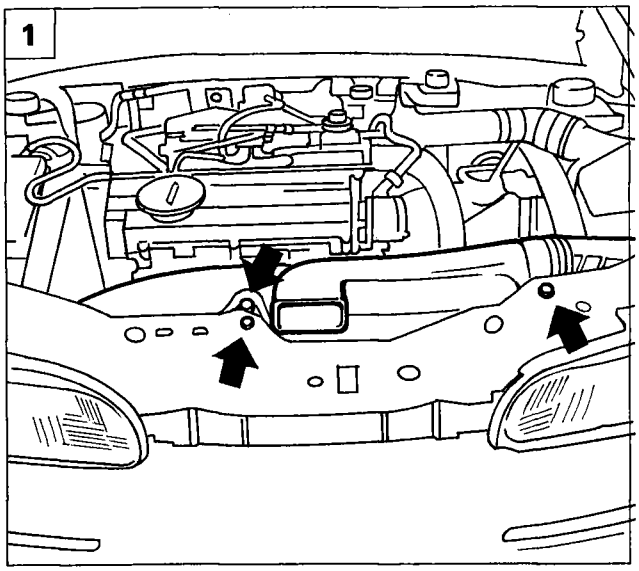

P4F01EX03

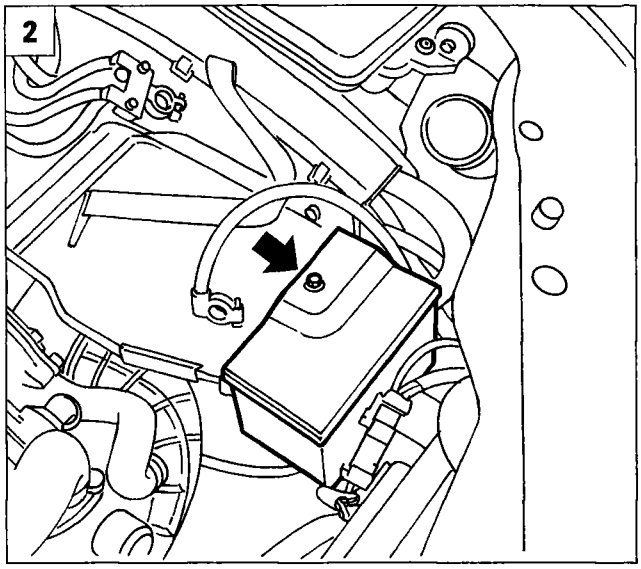

P4F03EX03

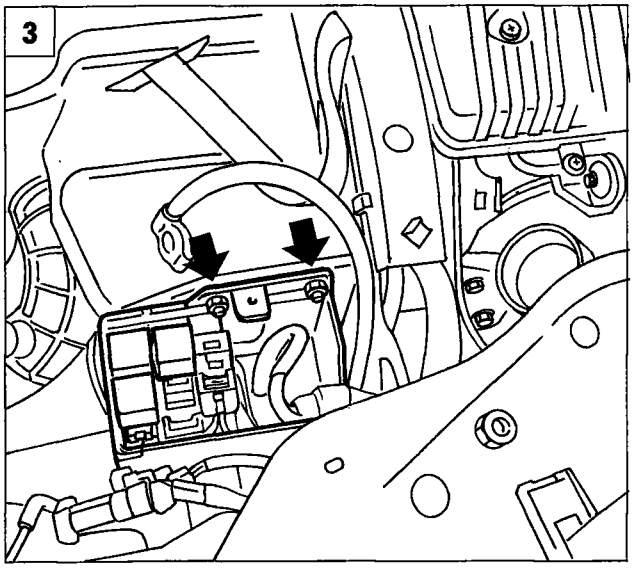

P4F03EX04

1. Undo the bolts indicated and remove the air duct illustrated.
2. Undo the bolt illustrated on the relay box cover.
3. Undo the nuts illustrated and move the relay box over to one side in the engine compartment.
4. Undo the bolts (1), slacken the bolt (2), then remove the battery cage.
5. Disconnect the hose (1) between the turboblower and intercooler and the air outlet hose (2) between the intercooler and the inlet manifold.

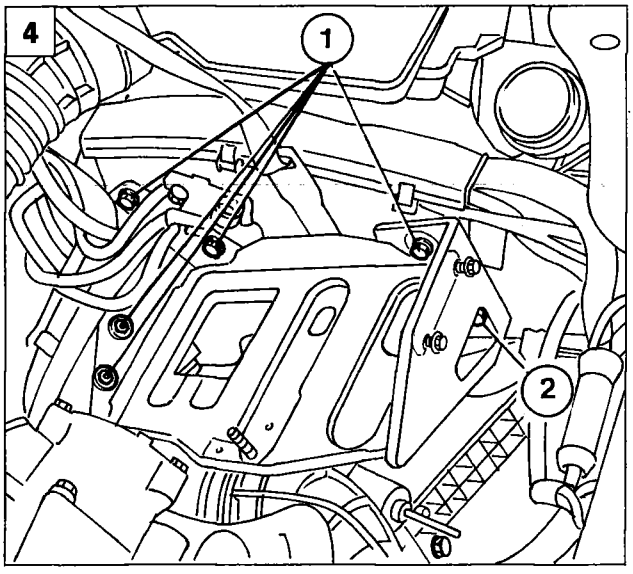

P4F03EX05

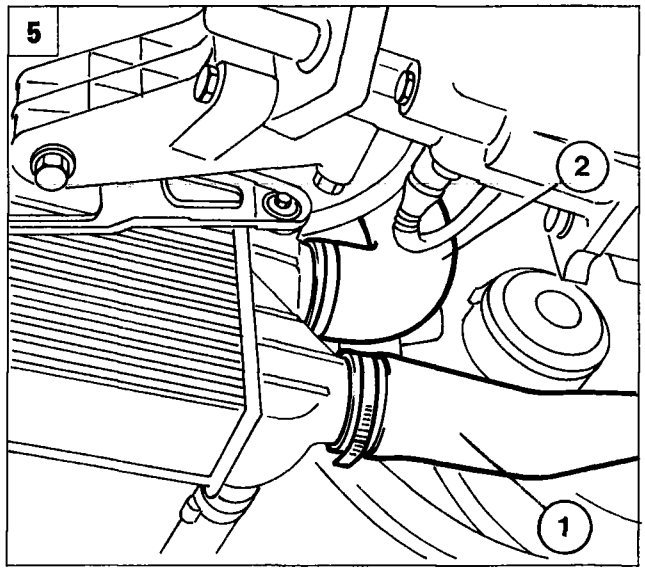

P4F02EX03

21-27.

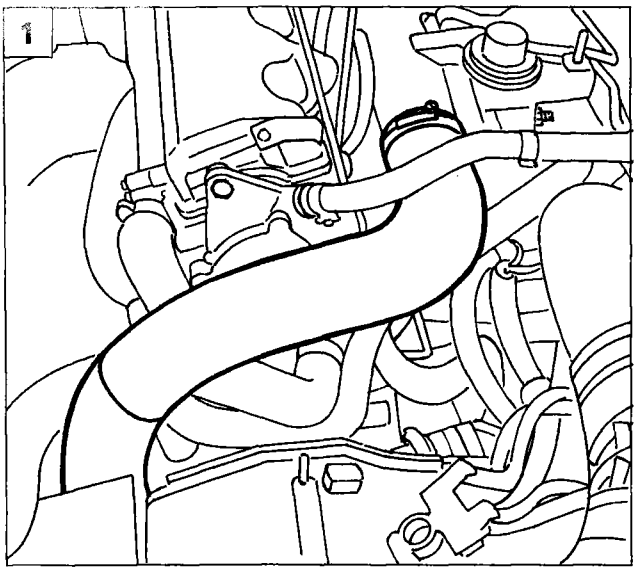

P4F03EX01

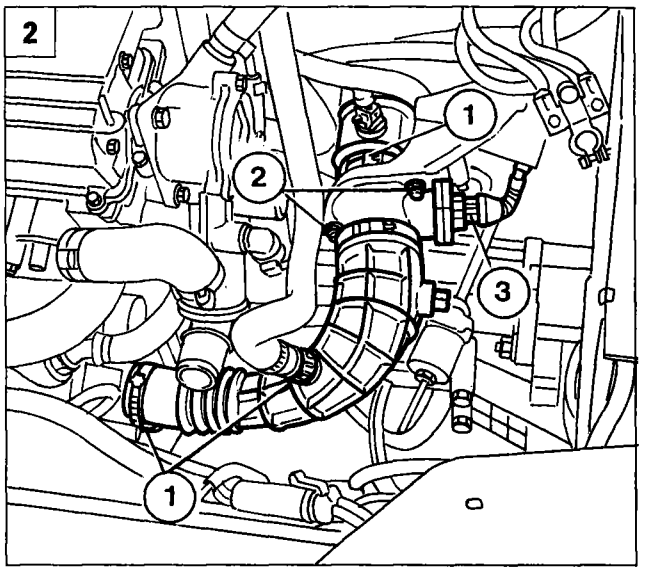

P4F04EX01

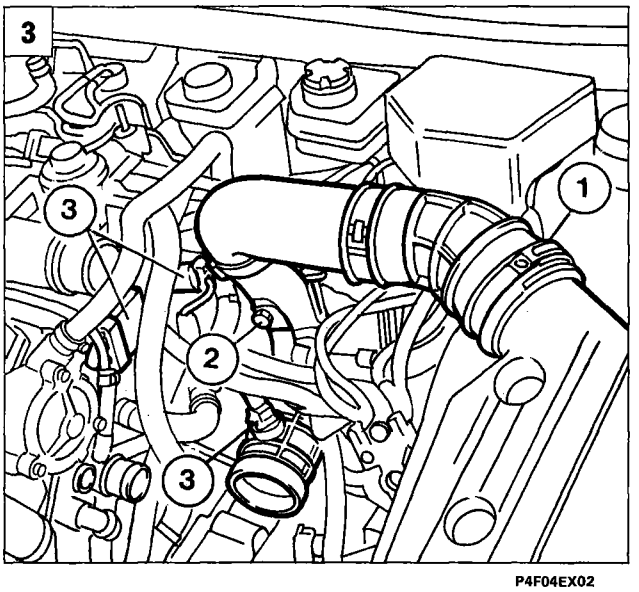

P4F04EX02

1. Remove the pipe illustrated, disconnecting it from the clip on the inlet manifold.
2. Undo the clips (1), undo the bolts (2), disconnect the connection (3), then remove the first section of the air inlet pipe complete with flowmeter.
3. Undo the clip (1), undo the bolt (2) disconnect the wiring connections (3) and then remove the second section of the air inlet pipe.
4. Disconnect the two wiring connections on the fan and thermostatic switch.
5. Undo the bolts illustrated securing the fan to the radiator, then remove the fan.

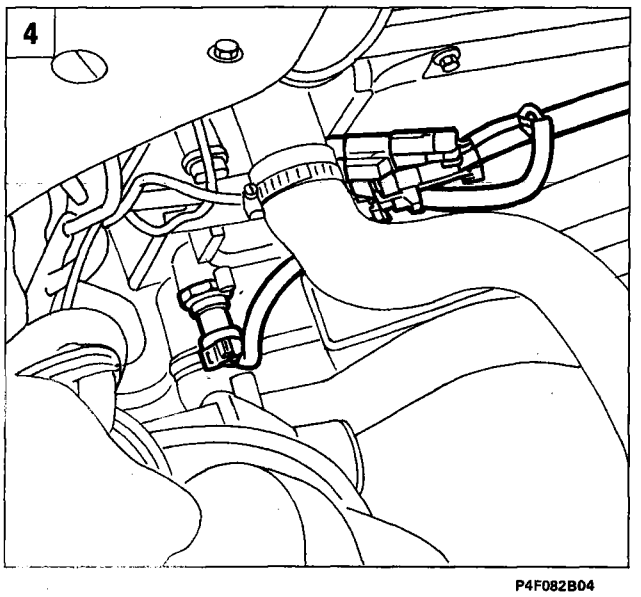

P4F082B04

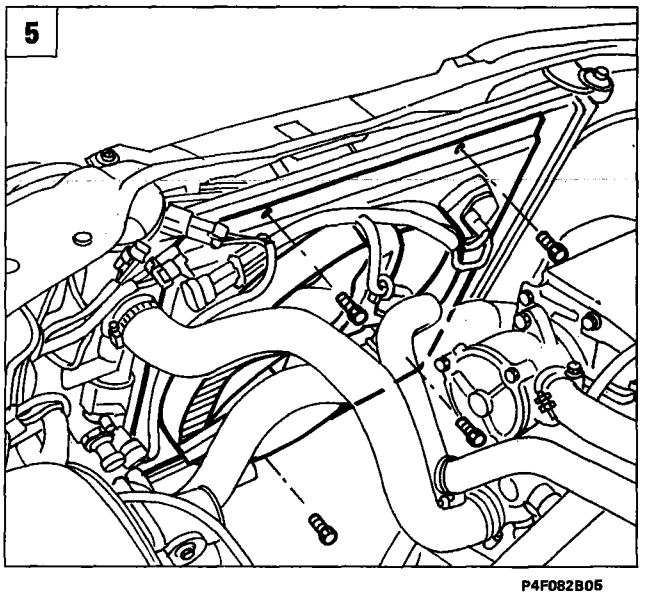

P4F082B05

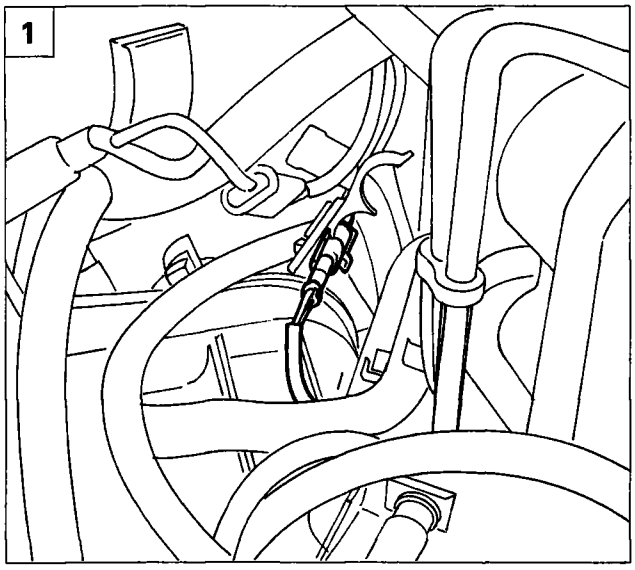

P4F083B01

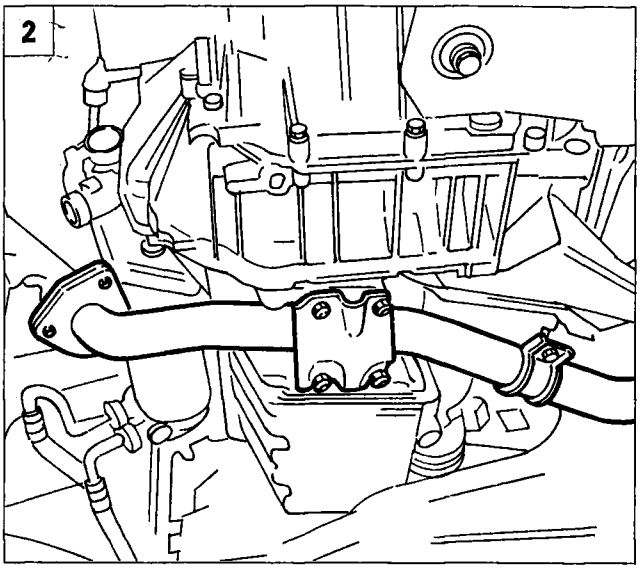

P4F07EX04

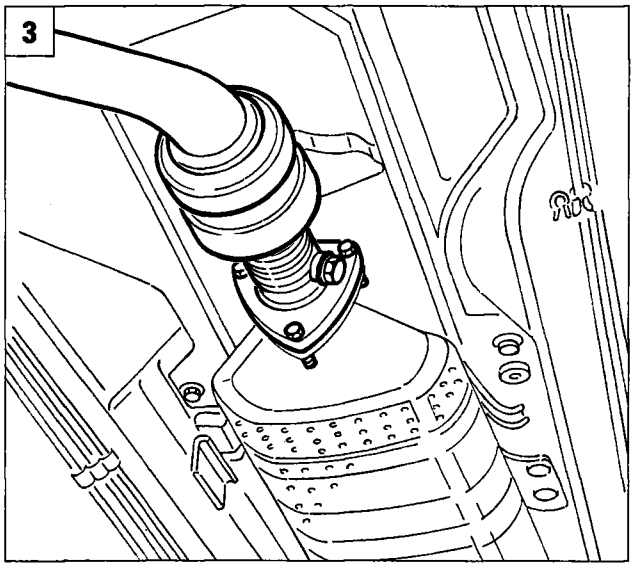

P4F004B04

1. Disconnect the electrical connector on the speedo sensor.
2. Disconnect the front section of the exhaust pipe from the manifold and the two anti-vibration brackets.
3. Disconnect the front section of the exhaust pipe from the catalytic converter, then remove it from the car.
4. Remove the anti-vibration bracket from the engine central mounting.
5. Undo the bolts indicated and remove the bracket illustrated located on the engine block near the intermediate shaft.

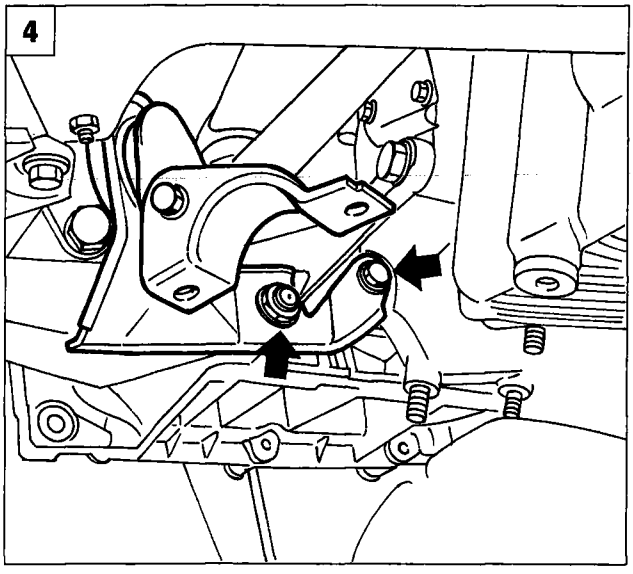

P4F083B04

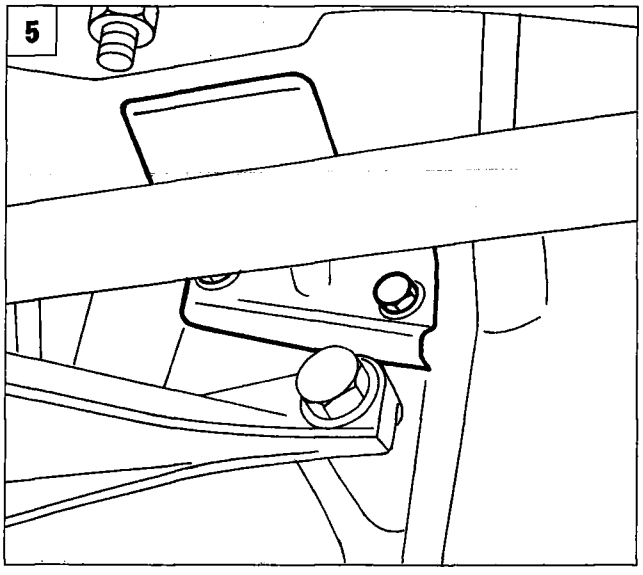

P4F083B05

21-27.

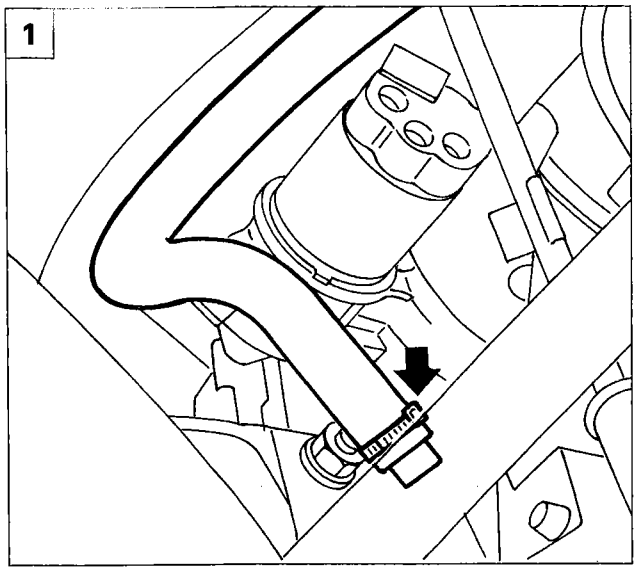

P4F084B01

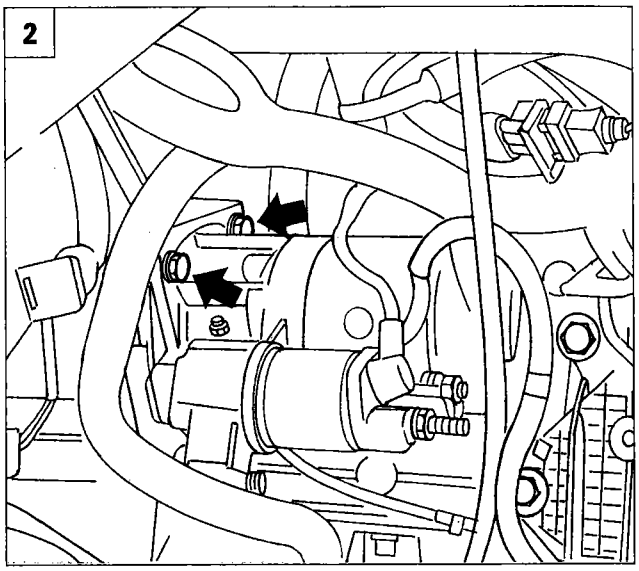

P4F084B02

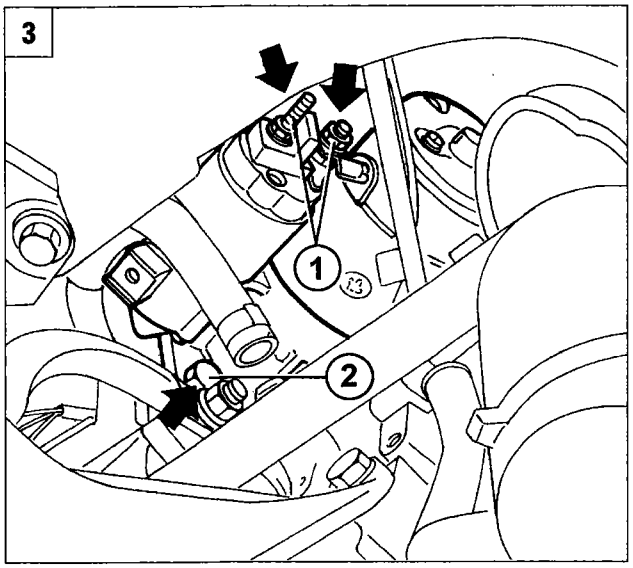

P4F084B03

1. Disconnect the engine oil vapour recirculation pipe from the engine block as illustrated.
2. Undo the two top bolts securing the starter motor to the gearbox.
3. Disconnect the supply cables (1), undo the bolt (2), then remove the starter motor from the engine compartment.
4. Using tool 1878077000 remove the button, undo the bolts and remove the dust shield. This operation must be repeated for the other shield on the other side of the car.
5. Remove the wheelarch guard illustrated.

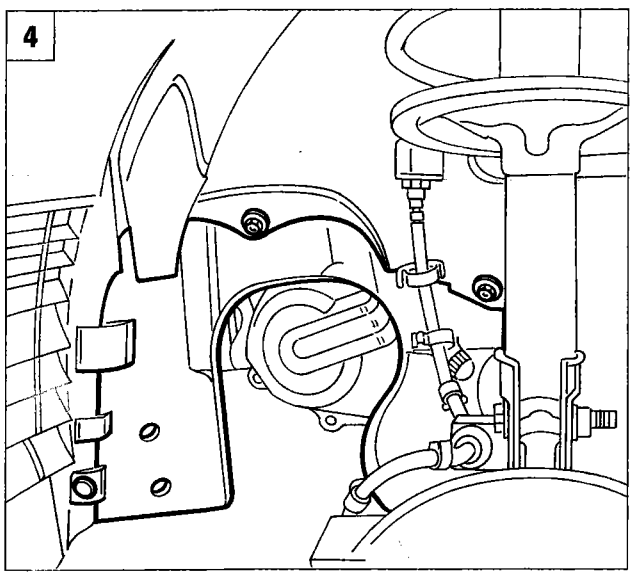

P4F003B02

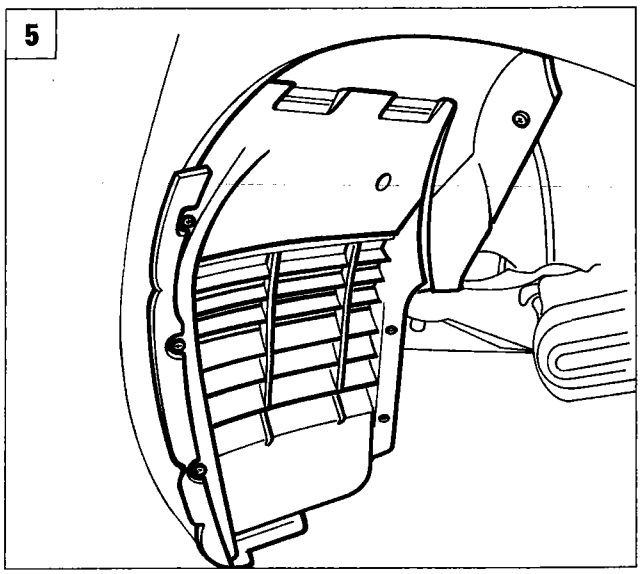

P4F003B03

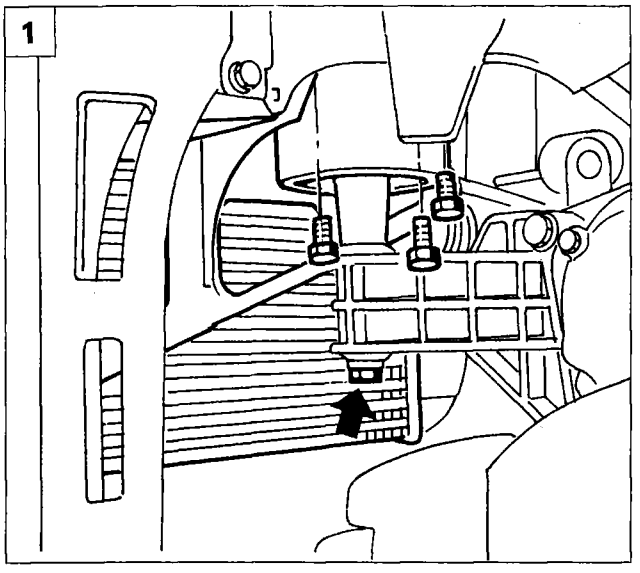

P4F02EX04

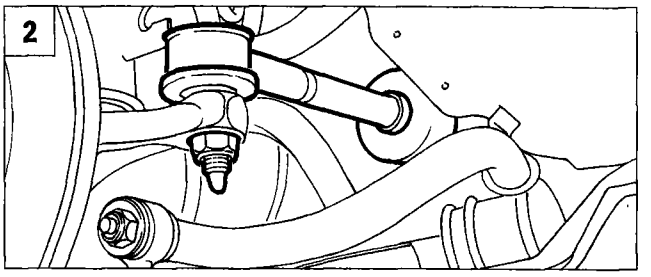

P4F002B05

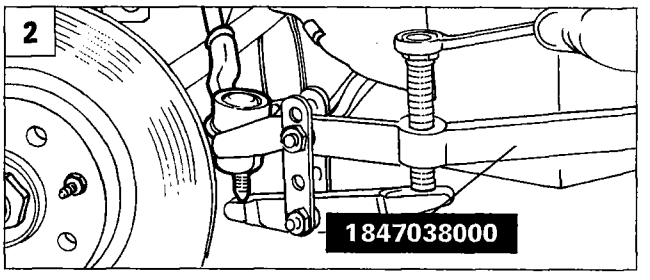

P4F002B06

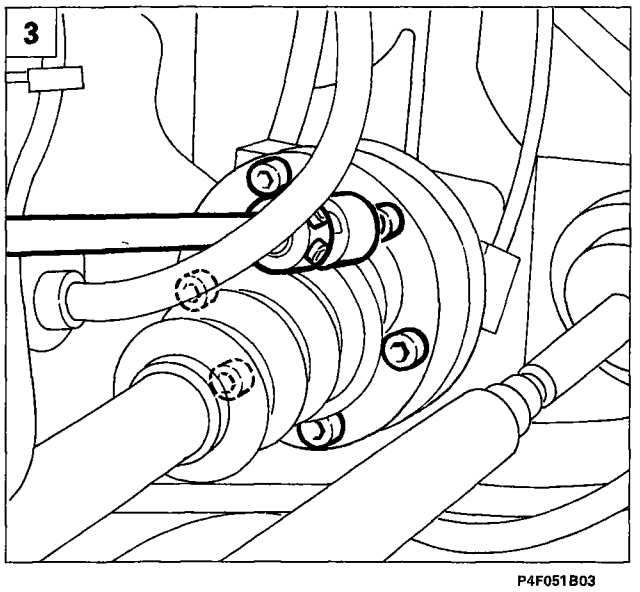

P4F051B03

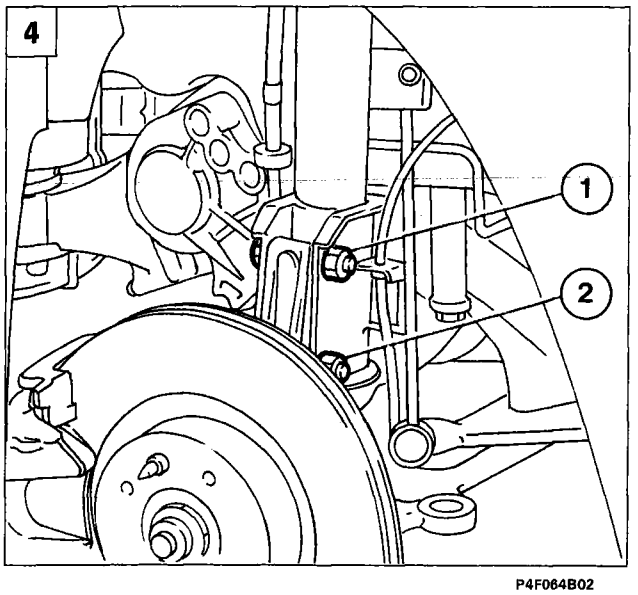

P4F064B02

1. Position the engine support jack, remove the engine mounting block illustrated, lower the engine and remove the intercooler complete with mounting bracket. After completing the operation, refit the engine mounting block.

2. Undo the nut securing the tie rod balljoint head, then using tool 1847038000 disconnect it from the vertical link.

3. Disconnect the drive shafts by undoing the bolts securing the constant velocity joint to the gearbox flange.

4. Undo the bolt (1) and slacken the bolt (2) securing the vertical link to the shock absorber, then rotate the brake disc downwards disengaging the drive shaft from its engagement in the differential. The operations 2-3-4 must be repeated for the other drive shaft on the other side of the car.

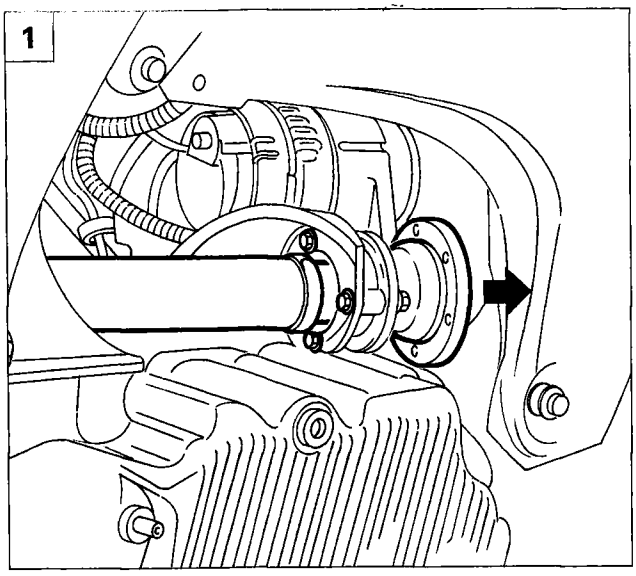

P4F040B02

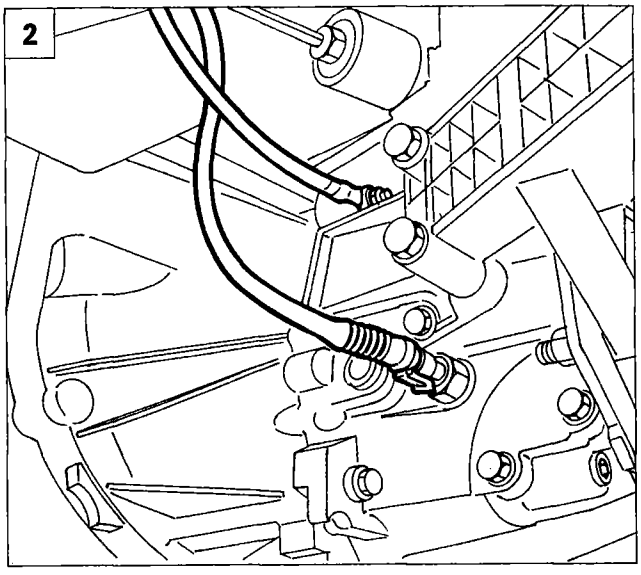

P4F086B02

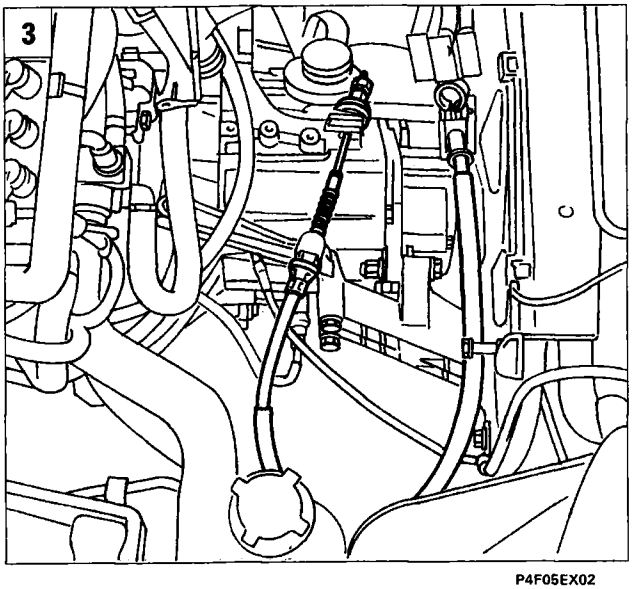

P4F05EX02

1. Undo the bolts securing the intermediate shaft to the engine, disengage it from the gearbox and secure it away from the working area.
2. Disconnect the electrical connection of the reversing lights switch and undo the nut securing the earth cable to the gearbox.
3. Disconnect the clutch release cable.
4. Disconnect the gear selection and engagement flexible transmission cables, removing the heads and the clips, taking care not to damage the flexible cables when removing the heads.
5. Remove the windscreen wiper arms by removing the nut covers and undoing the nuts underneath.

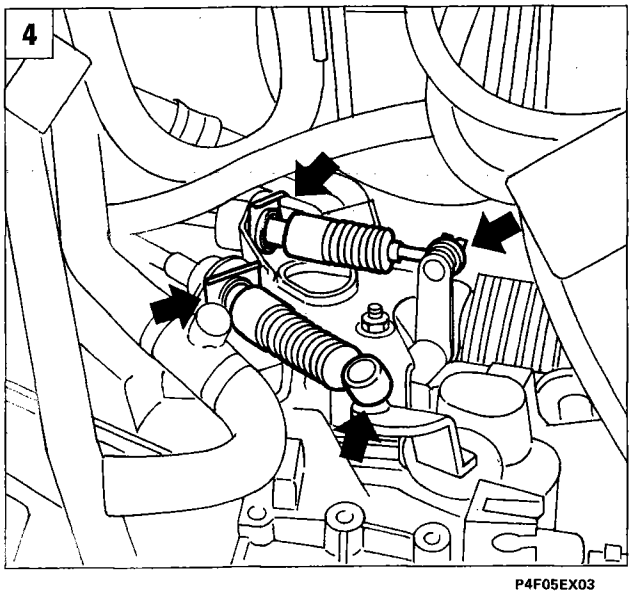

P4F05EX03

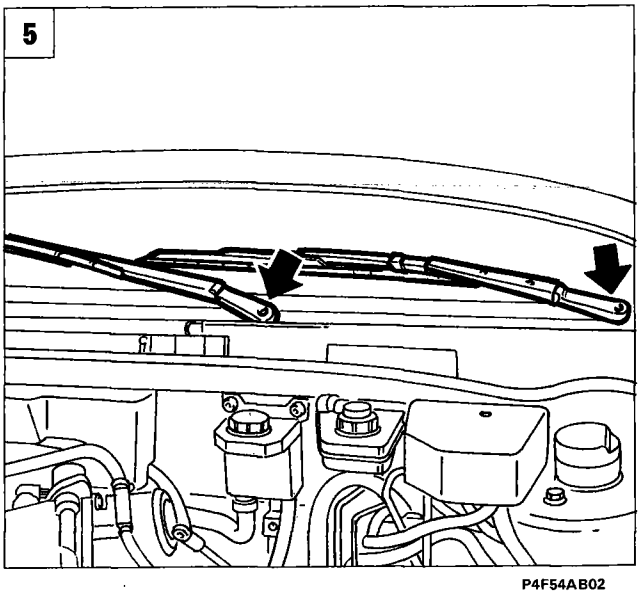

P4F54AB02

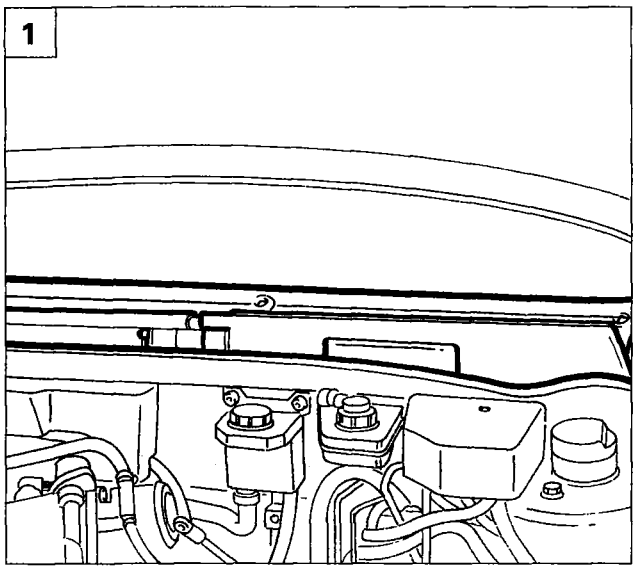

P4F54AB03

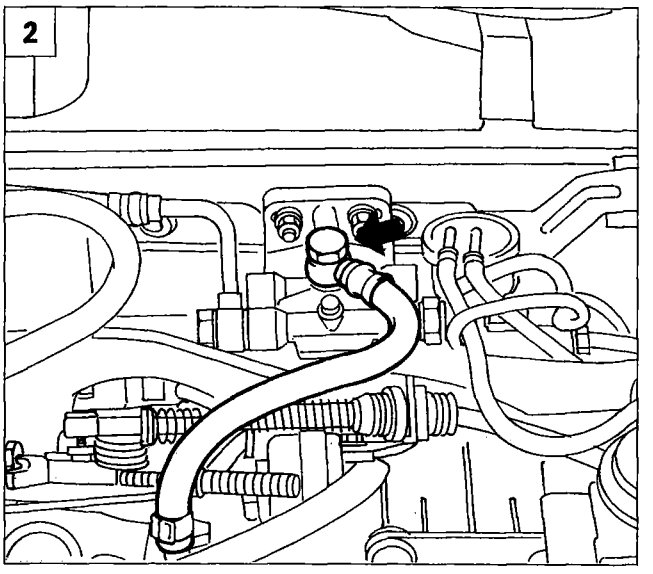

P4F087B02

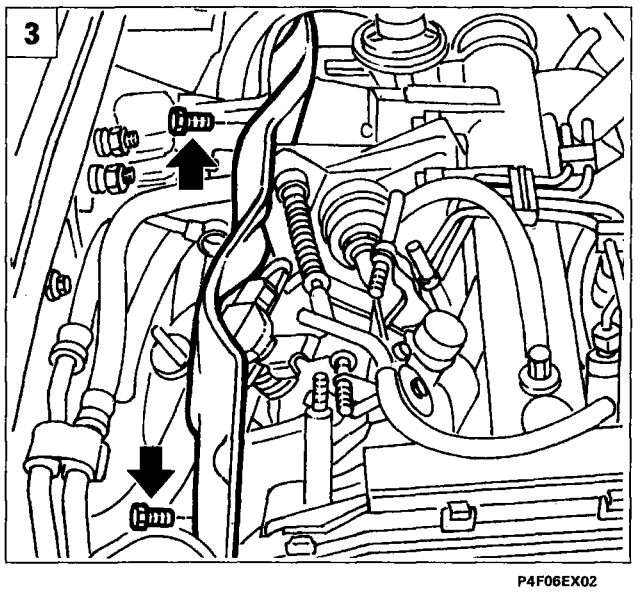

P4F06EX02

1. Remove the plastic guards from the anti-pollen filter.
2. Disconnect the fuel delivery pipe from the filter to the injection pump by undoing the connection indicated.
3. Remove the rear sound-proofing cover by undoing the bolts illustrated.
4. Disconnect the accelerator cable at the points illustrated.
5. Undo the nuts illustrated, then release the oil vapour separator and move it over to one side.

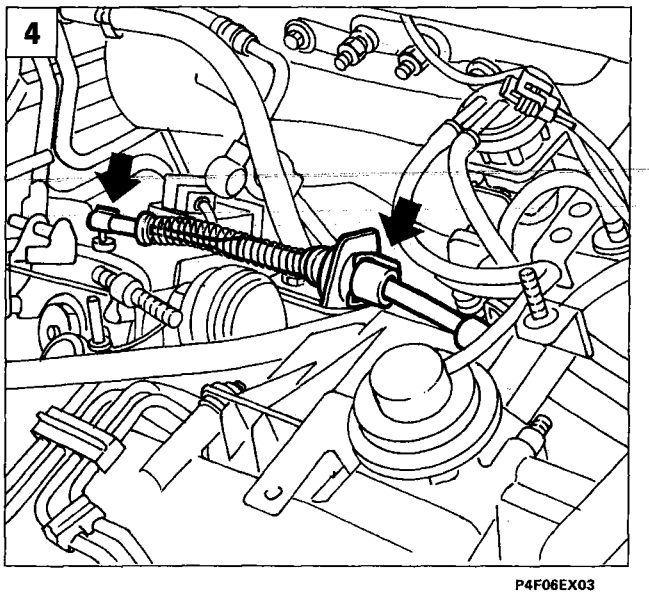

P4F06EX03

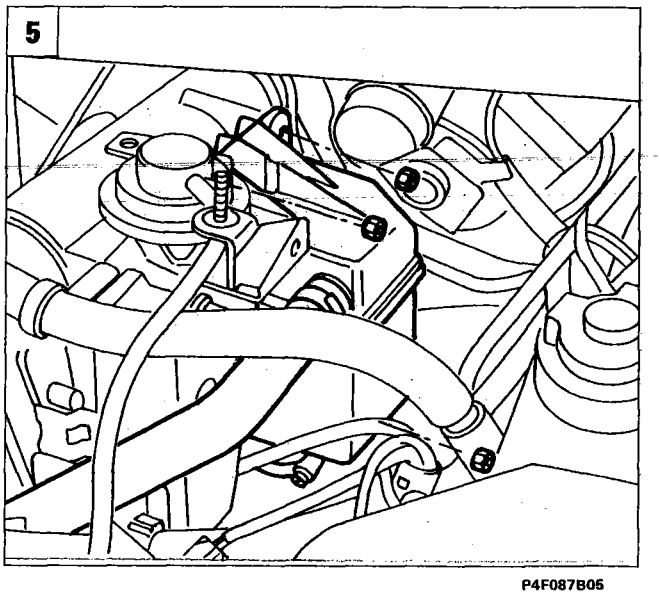

P4F087B05

21-27.

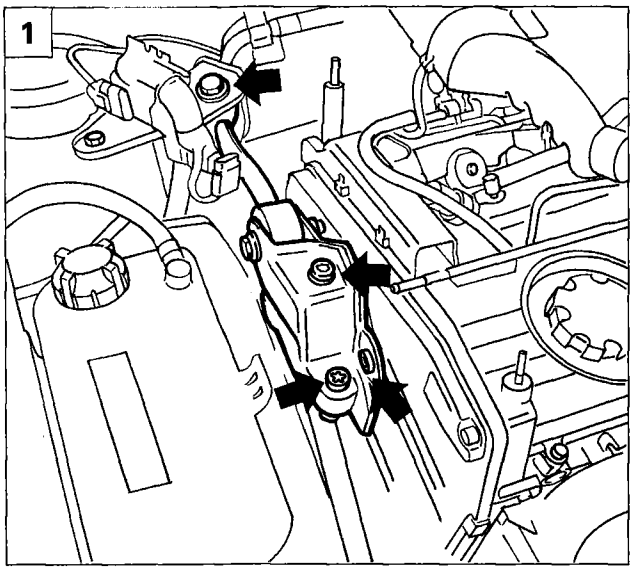

P4F06EX05

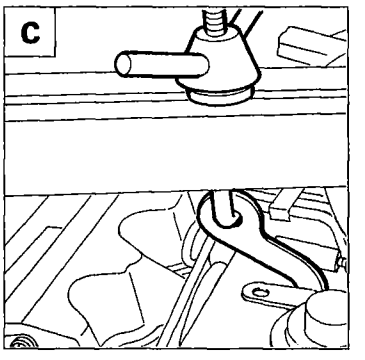

P4F088B05

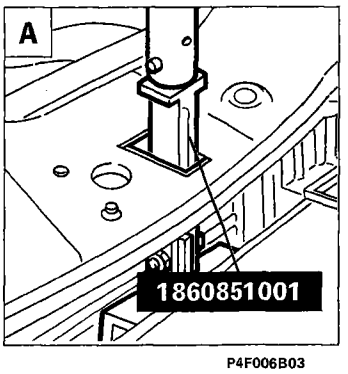

P4F006B03

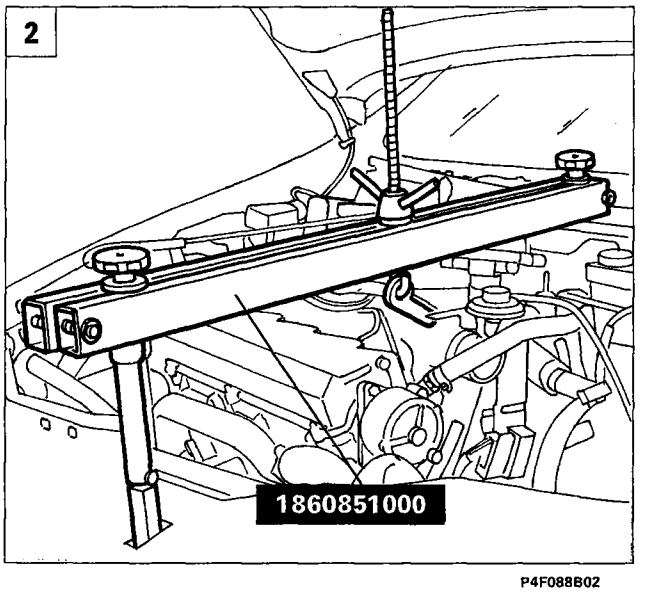

P4F088B02

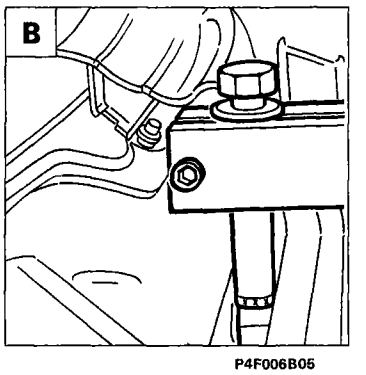

P4F006B05

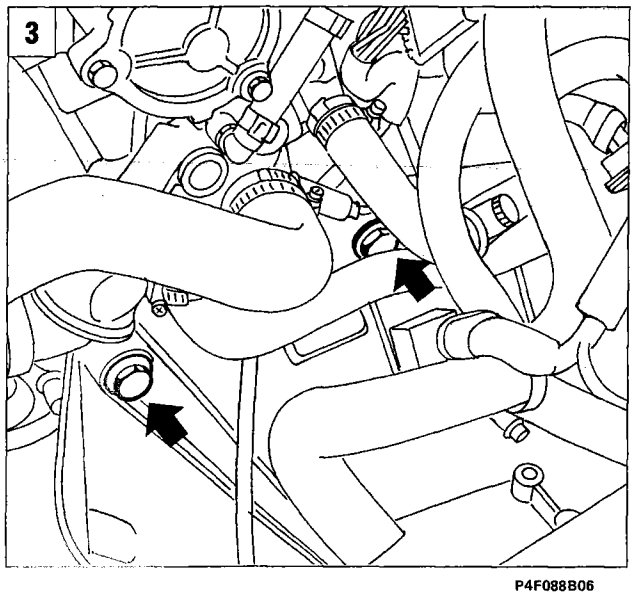

P4F088B06

1. Remove the reaction link complete with mounting by undoing the screws illustrated.
2. Fit the engine support crossbeam 1860851000 and the adaptor 1860851001 on the relevant attachment points.

A. Front attachment: place the tool in the seating of the safety catch so that it rests on the front crossmember.

B. Rear attachment: place the tool level with the central reinforcement of the flame-proof bulkhead.

C. Secure the hook of the crossmember at the point illustrated in the figure on the inlet manifold.

3. Undo the top bolts securing the gearbox to the engine block.

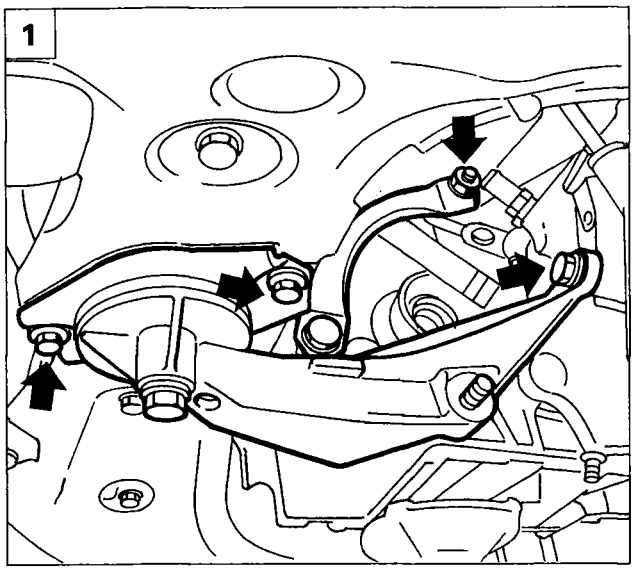

P4F089B01

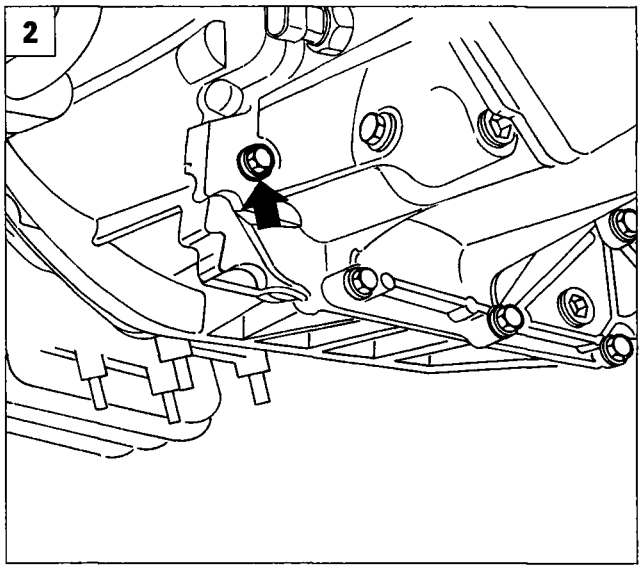

P4F026B01

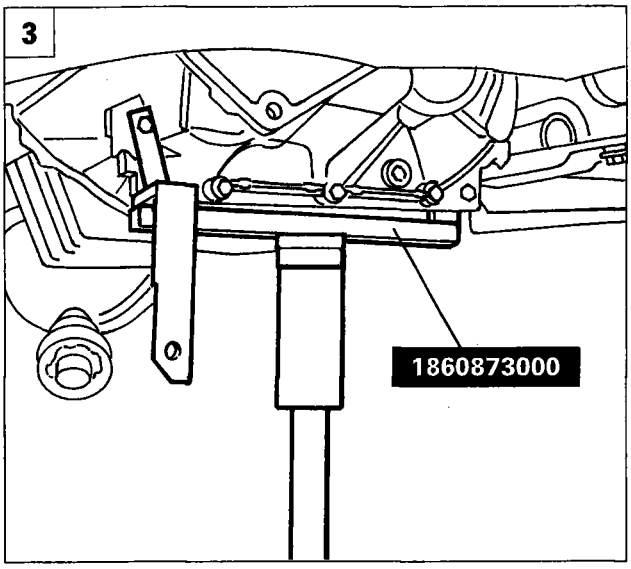

P4F089B03

1. Remove the engine central mounting.
2. Undo the bolt illustrated to allow the gearbox removal tool to be fitted.
3. Fit tool 1860873000 for supporting and handling the gearbox and differential unit.
4. Remove the engine mounting, gearbox side.
5. Undo the bolts illustrated securing the gearbox to the engine.

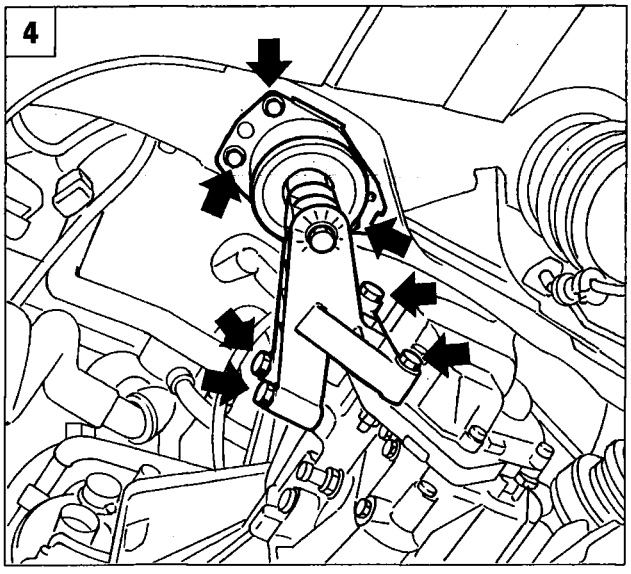

P4F089B04

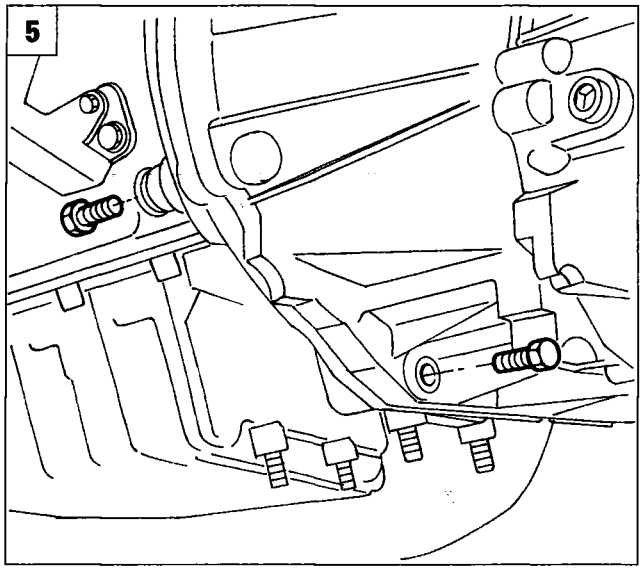

P4F089B05

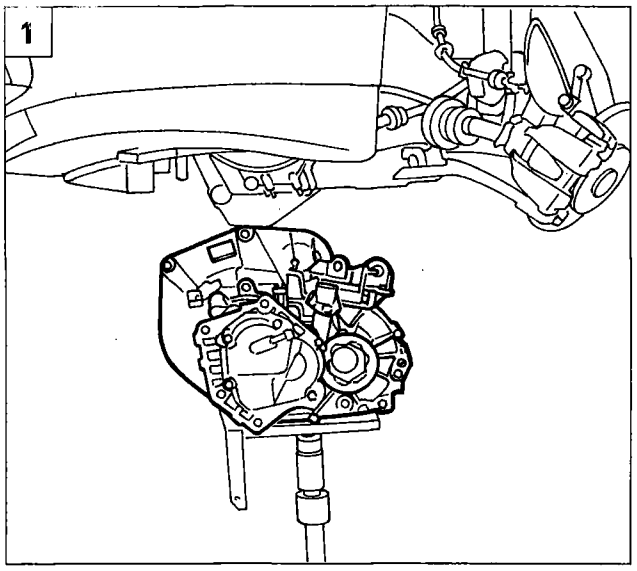

P4F090B01

1. Manoeuvre the hydraulic jack so as to release the gearbox from the attachment pins and surrounding parts. Gradually lower the jack and withdraw the gearbox - differential unit.

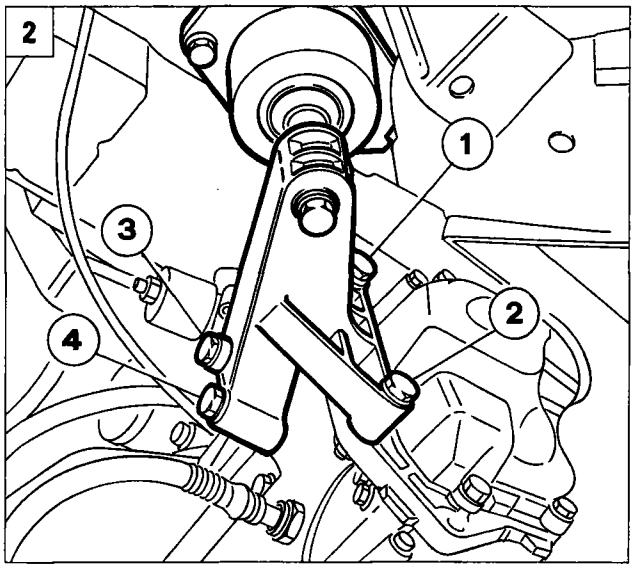

P4F028B01

Refitting

2. When refitting the engine mounting, gearbox side, to prevent stresses and deformation resulting in oil leaks on the sealing surfacts, tighten the bolts in the following sequence:

- Tighten the bolts (1) and (2) to a preliminary torque of 0.5 daNm;
- Tighten the bolts (3) and (4) to a preliminary torque of 0.5 daNm, then tighten to the specified torque;
- Tighten the bolts (1) and (2) to the specified torque.

For the remaining operations, reverse the procedure described for removal. To fit the clutch release bearing, refer to the procedure described for the 1370 12v engine.

REMOVING - REFITTING AND DISMANTLING DRIVE SHAFTS

To remove, refit and dismantle the drive shafts, refer to the procedure described for the 1747 16v engine.

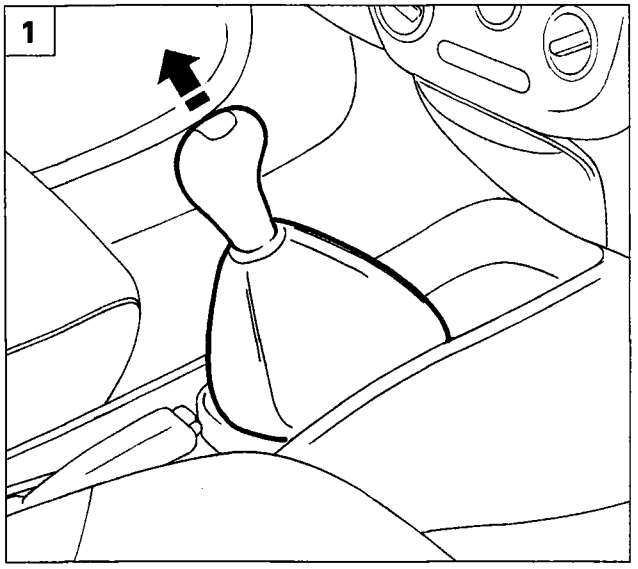

P4F015B01

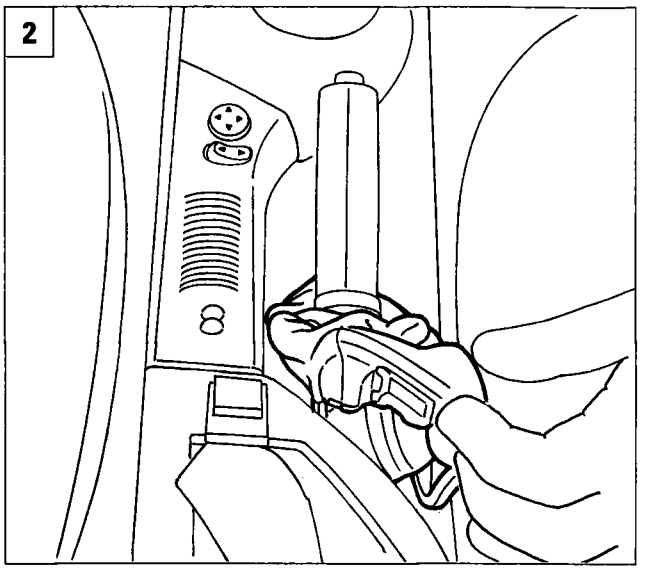

P4F071B01

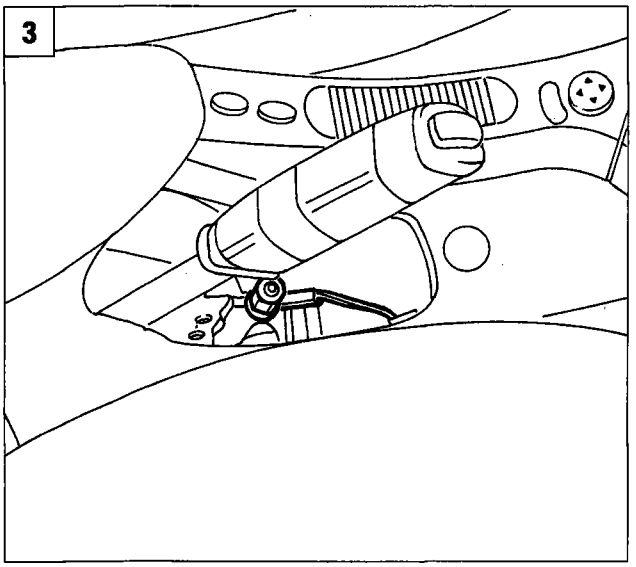

P4F071B02

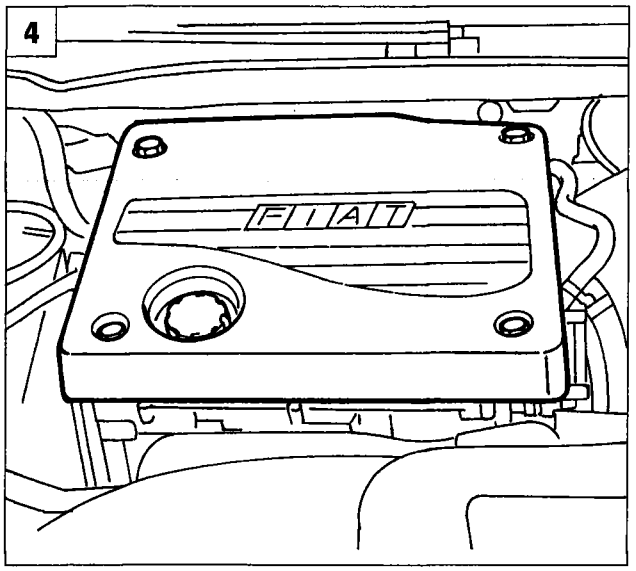

P4F01EX01

REMOVING - REFITTING

Place the car on ramps, disconnect the battery's negative pole, remove the front wheels, then proceed as described below.

1. Working from inside the car, remove the gear change lever gaiter without removing the lever knob.
2. Remove the handbrake lever dust gaiter.
3. Disconnect the wiring connection illustrated and slacken the handbrake adjustment nut.
4. Remove the engine top guard.

21-27.

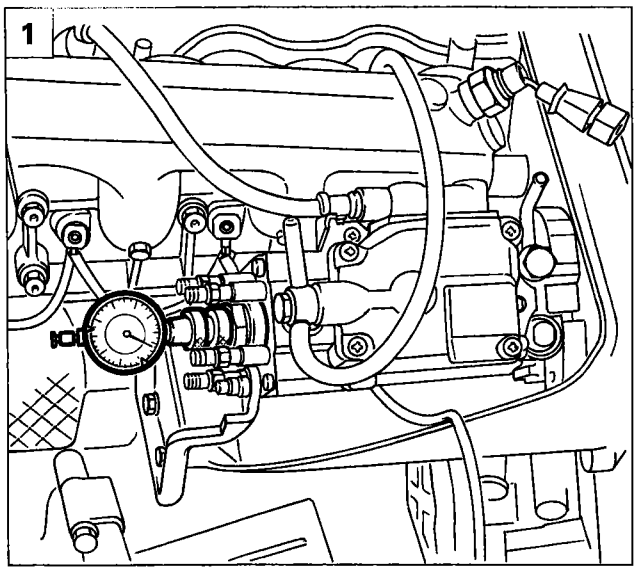

P4F01EX02

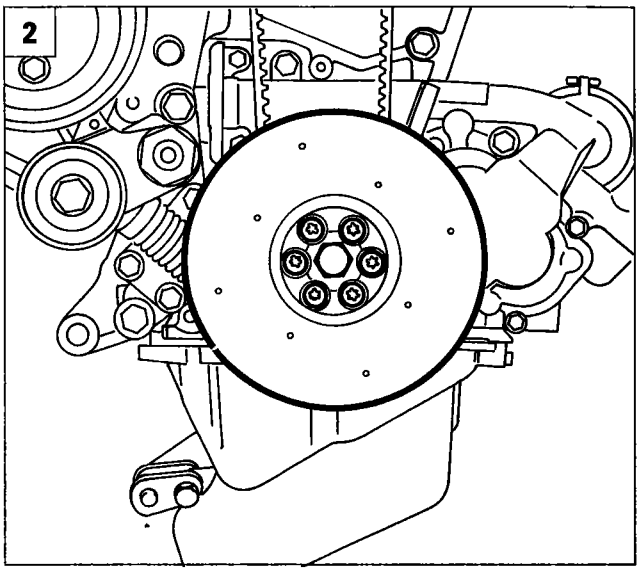

P4F01EX03

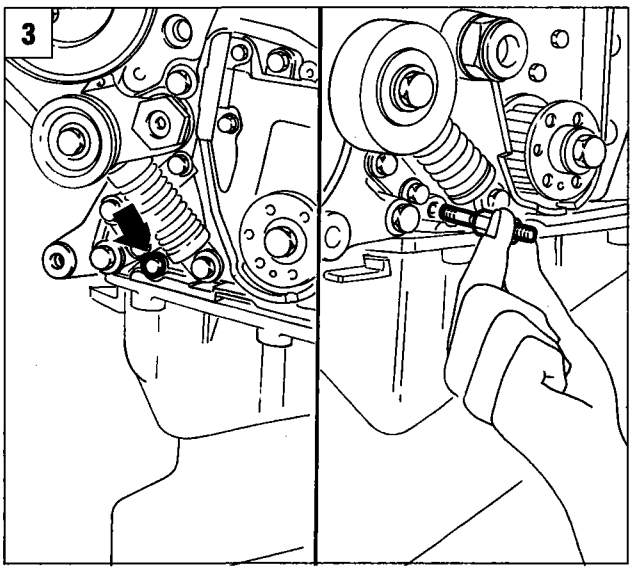

P4F003B01

1. Disconnect the battery's positive pole, undo the nut securing the battery to its cage, then remove it from the engine compartment.
2. Undo the bolts illustrated and remove the air duct illustrated.
3. Raise the ramps and remove the engine compartment bottom guard.
4. Undo the bolt illustrated on the relay box cover.
5. Undo the nuts illustrated and move the relay box over to one side in the engine compartment.

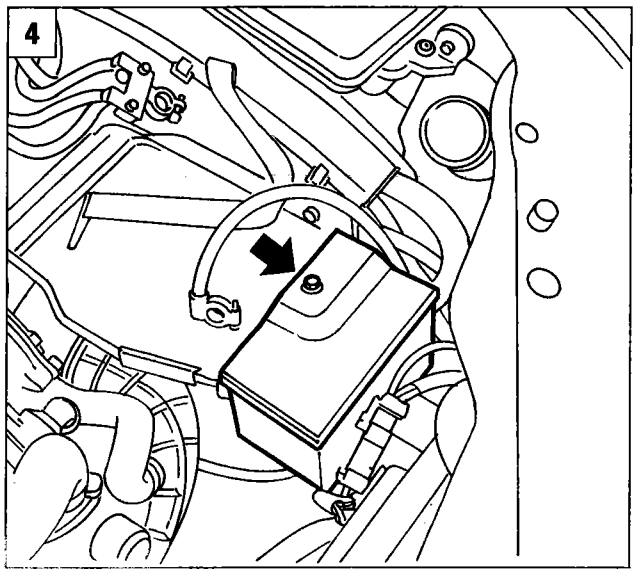

P4F03EX03

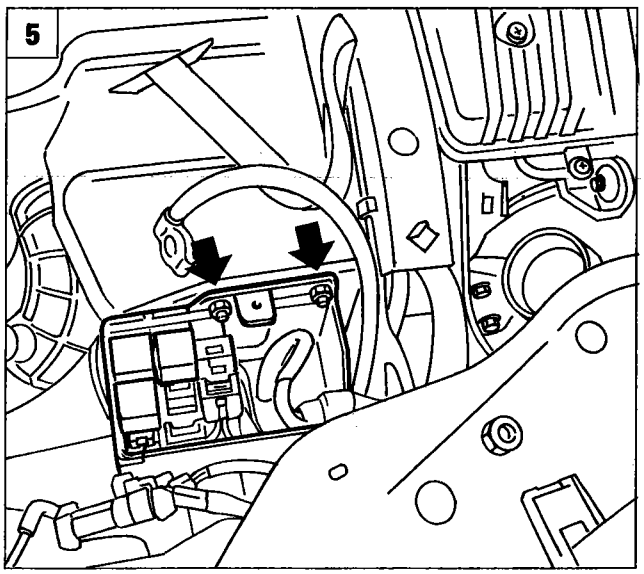

P4F03EX04

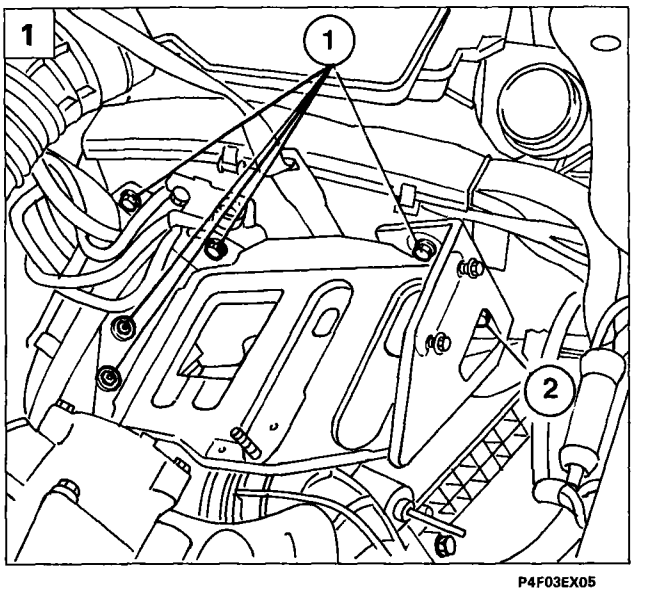

P4F03EX05

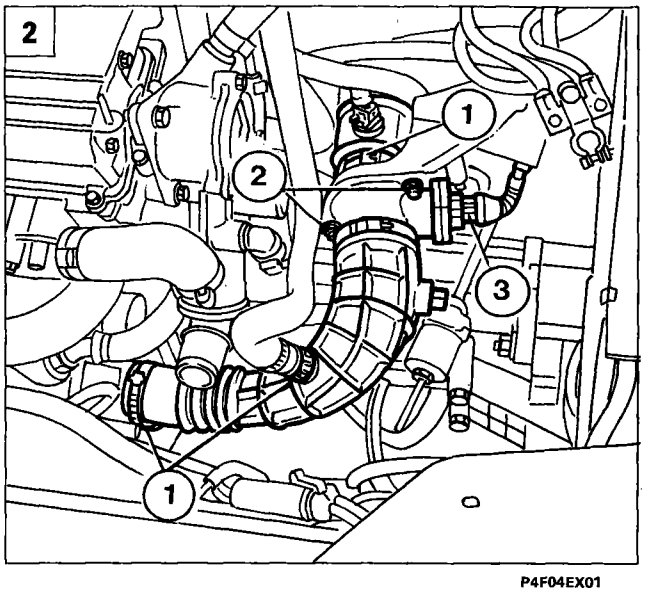

P4F04EX01

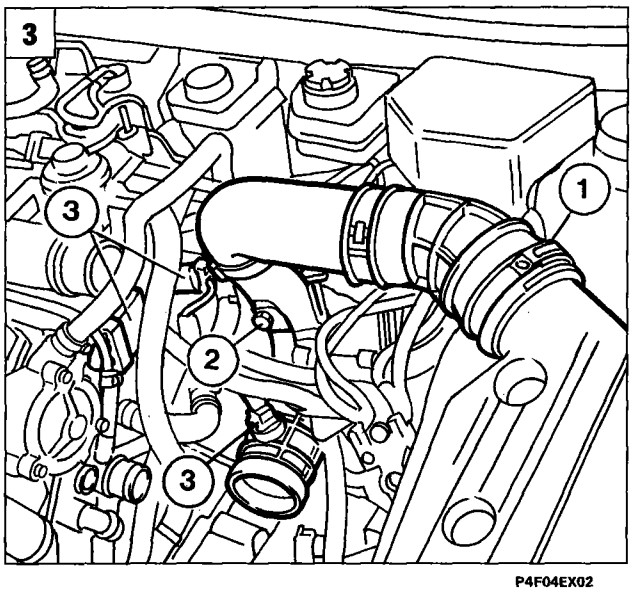

P4F04EX02

1. Undo the bolts (1), undo the bolt (2), then remove the battery cage.
2. Undo the clips (1), undo the bolts (2), disconnect the connection (3), then remove the first section of the air intake duct complete with flowmeter.
3. Undo the clip (1), undo the bolt (2) disconnect the wiring connections (3), then remove the second section of the air intake duct.
4. Disconnect the gear selection and engagement flexible transmissions from the gearbox at the points indicated, taking care not to damage the flexible transmissions when removing the heads.
5. Disconnect the front section of the exhaust pipe from the manifold and the two anti-vibration brackets.

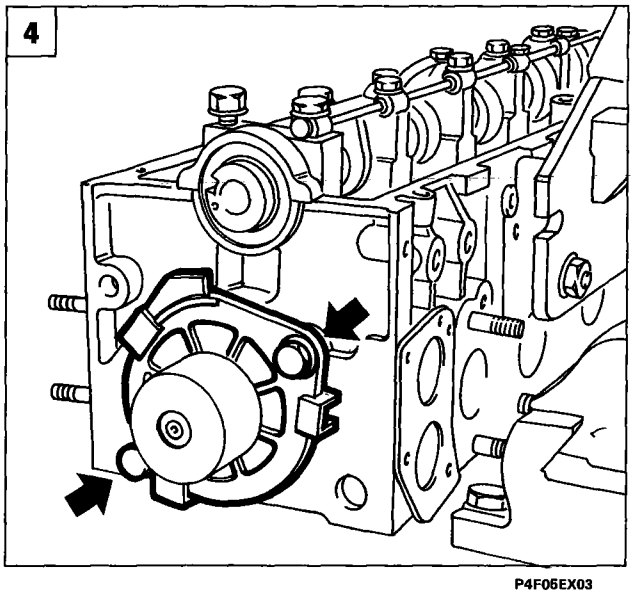

P4F05EX03

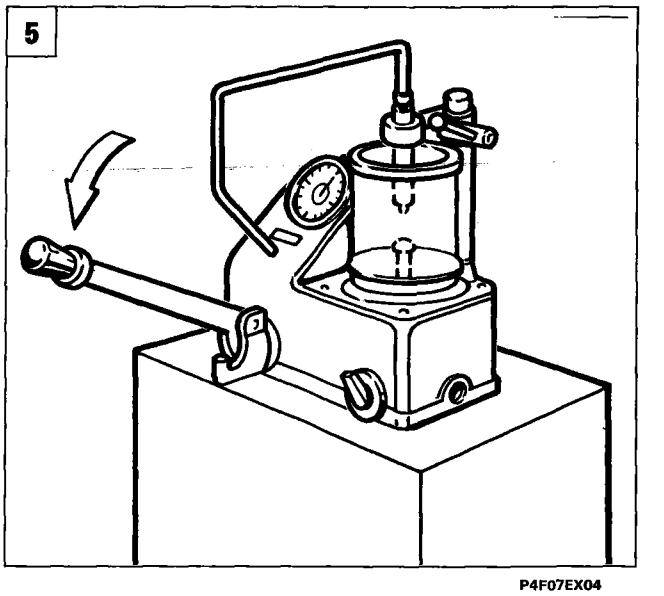

P4F07EX04

21-27.

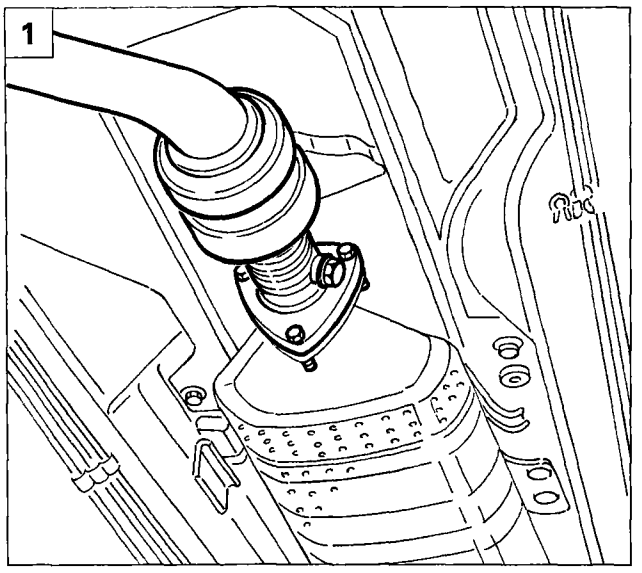

P4F004B04

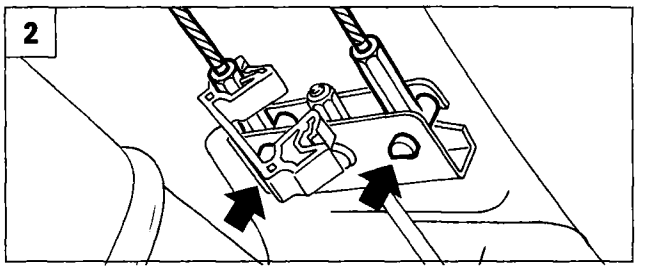

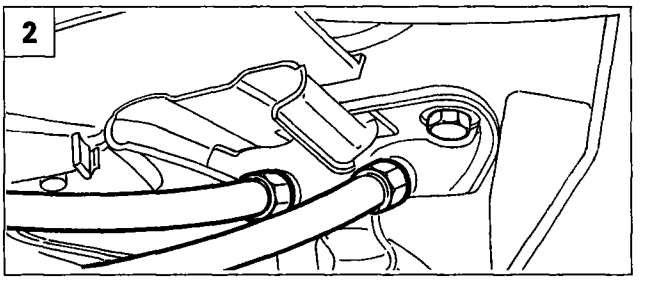

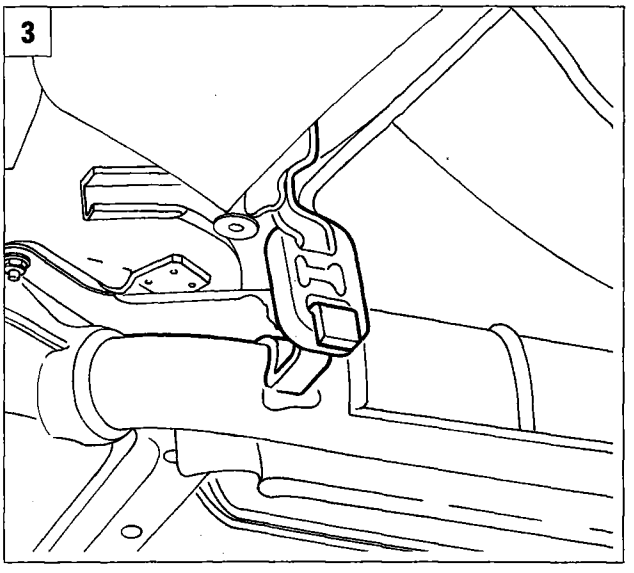

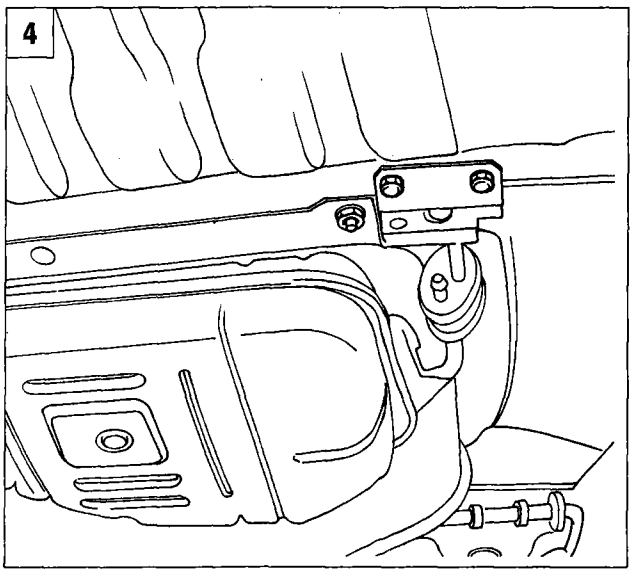

1. Disconnect the front section of the exhaust pipe from catalytic converter, then remove it from the car.
2. Disconnect the handbrake cables from the mounting and disengage them from the bracket.
3. Release the exhaust pipe from the rubber mount indicated.
4. Undo the bolts securing the exhaust pipe front mounting bracket.

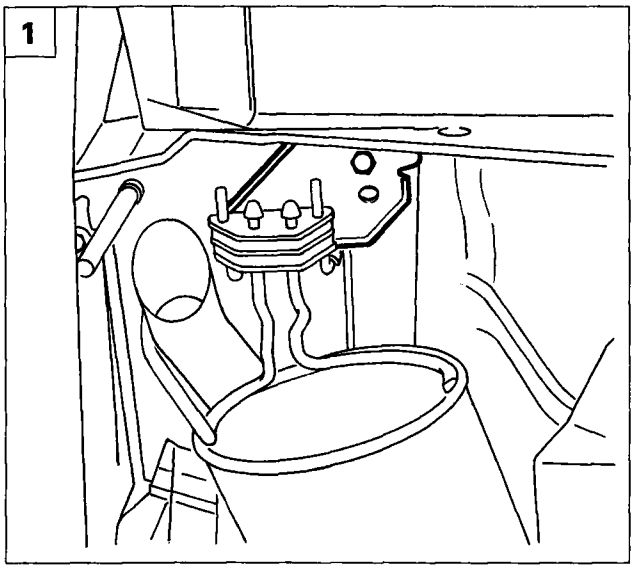

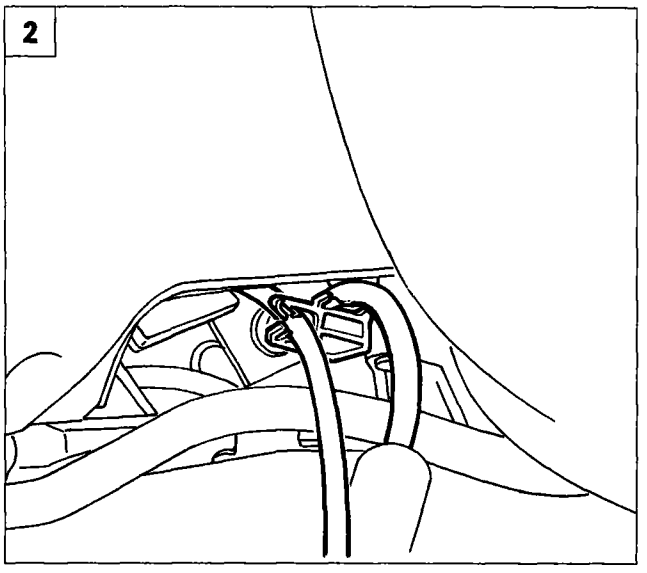

P4F074B01

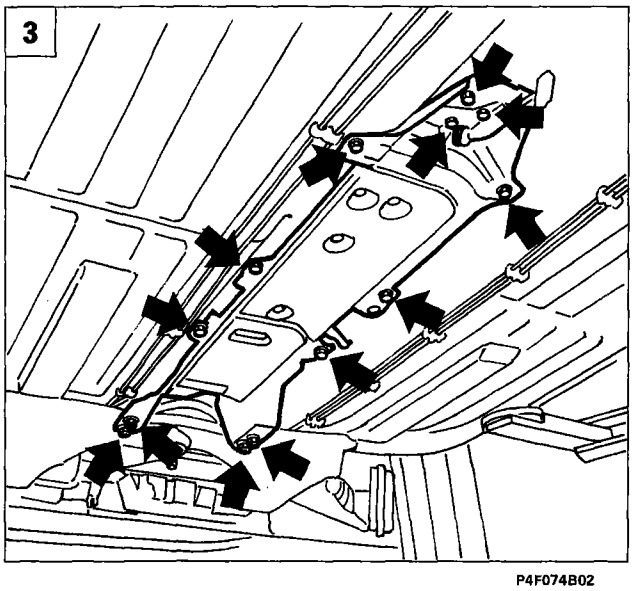

P4F074B02

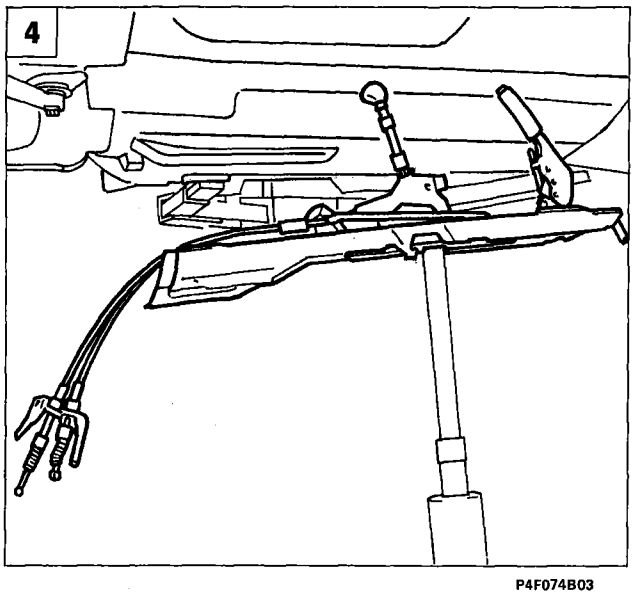

P4F074B03

1. Undo the bolt securing the exhaust pipe rear mounting bracket, then remove the exhaust pipe from the car.

2. Open the clip illustratted and release the two flexible transmission cables.

3.4. Undo the bolts indicated, place a hydraulic jack under the heat shield, then slowly lower and withdraw the external gear selector linkage assembly from the car.

DISMANTLING AT THE BENCH

To dismantle the flexible transmission cables and the gear lever, proceed as described in the sub-section "Gear selector linkage" for the 2387 TD engine.

The flexible transmissions on this engine cannot be adjusted.

21-27.

DIAGRAM OF GEAR SELECTOR LINKAGE

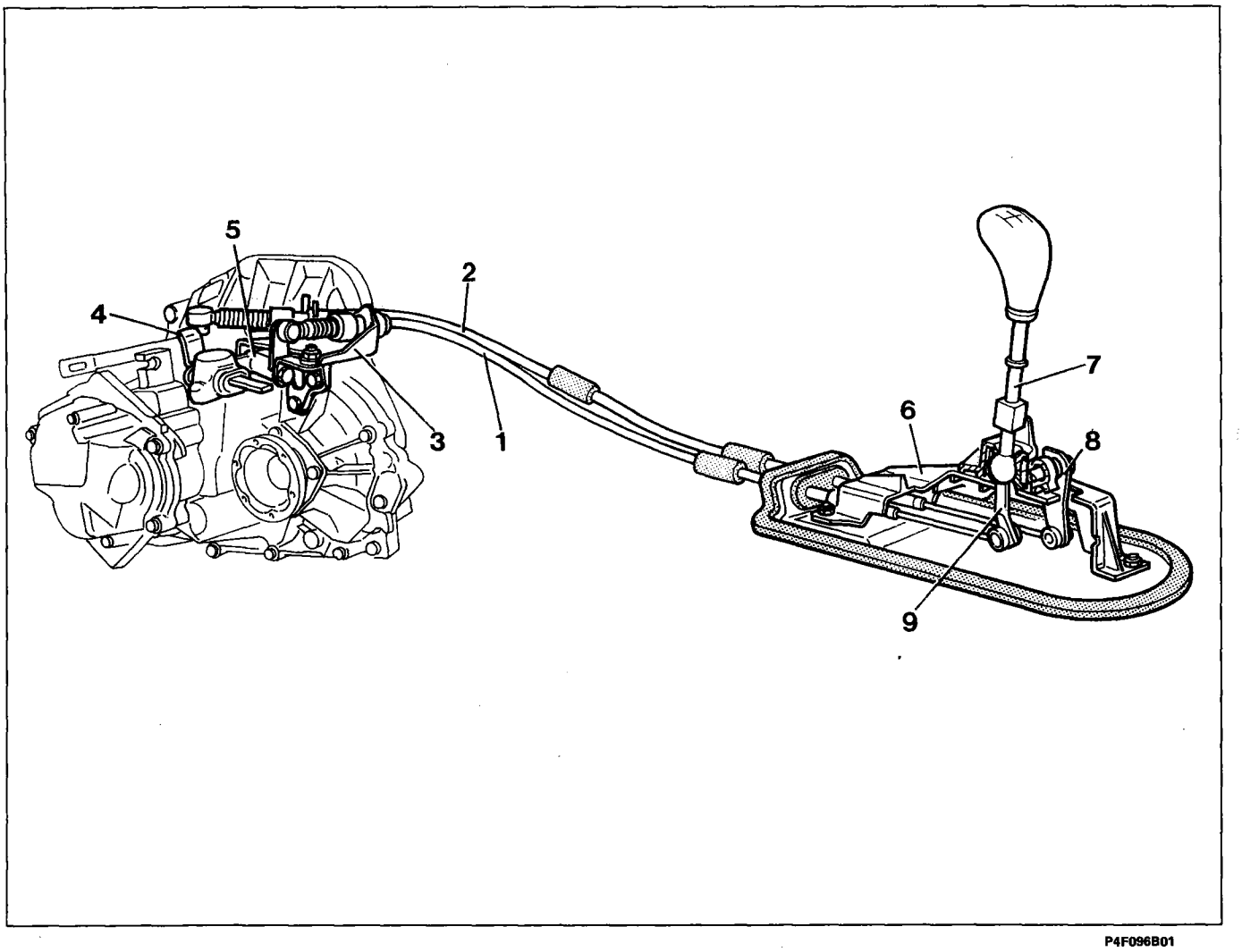

P4F096B01

1. Gear engagement flexible transmission cable
2. Gear selection flexible transmission cable
3. Flexible transmission cable mounting bracket
4. Gear selection linkage on gearbox
5. Gear engagement linkage on gearbox
6. External linkage mounting
7. Gear change lever
8. Selection linkage on lever
9. Engagement linkage on lever

page

COMPONENTS AND OPERATION

- Description 1
- Selector lever 3
- Torque converter 3
- Lock-up clutch 4
- Oil pump 5
- Epicyclic gear sets 5
- Control components 6
- Hydraulic control system 8
- Transmission of motion 9
- Safety control unit 13
- Electronic control system 15
- Control module 16
- Operating strategies 19
- Gear change solenoids 26
- Lock-up clutch control solenoid 27
- Pressure control solenoid 27
- Selector lever position sensor 28
- Gearbox oil temperature sensor 29
- Main shaft rpm sensor - Vehicle speed sensor 29
- Kick-down switch 30
- Stop lights switch 30
- Throttle valve position signal 30
- Engine coolant temperature signal 30
- Wiring diagram 31
- Diagnosis 32

SERVICING AND ADJUSTMENTS

- Changing gearbox oil 39
- Checking oil level 39
- Gearchange cable 40
- Gearchange lever position sensor 46
- Removing-refitting gearchange control unit (control module) 48
- Removing-refitting safety control unit 49
- Removing-refitting fan and gearbox oil cooling radiator 49
- Main shaft rpm sensor - Vehicle speed sensor 50

REMOVING-REFITTING

- Removing-refitting gearbox 51
- Precautions 60

page

DRIVE SHAFTS

- Removing-refitting 63
- Dismantling-reassembly 64
- Reassembly 65
- Transmission components 66

VALVE ASSEMBLY

- Removing-refitting valve assembly 67
- Kick-down switch 69

Copyright Fiat Auto

DESCRIPTION

Introduction

The Fiat Marea and Marea Weekend 1581 16v Torque uses an AISIN 60-40 LE automatic gearbox and differenetial unit, 4-speed version AW 596/Y024, specially designed for front-wheel drive vehicles with transverse-mounted engine, fitted with an electronic control system connected to the engine management control unit.

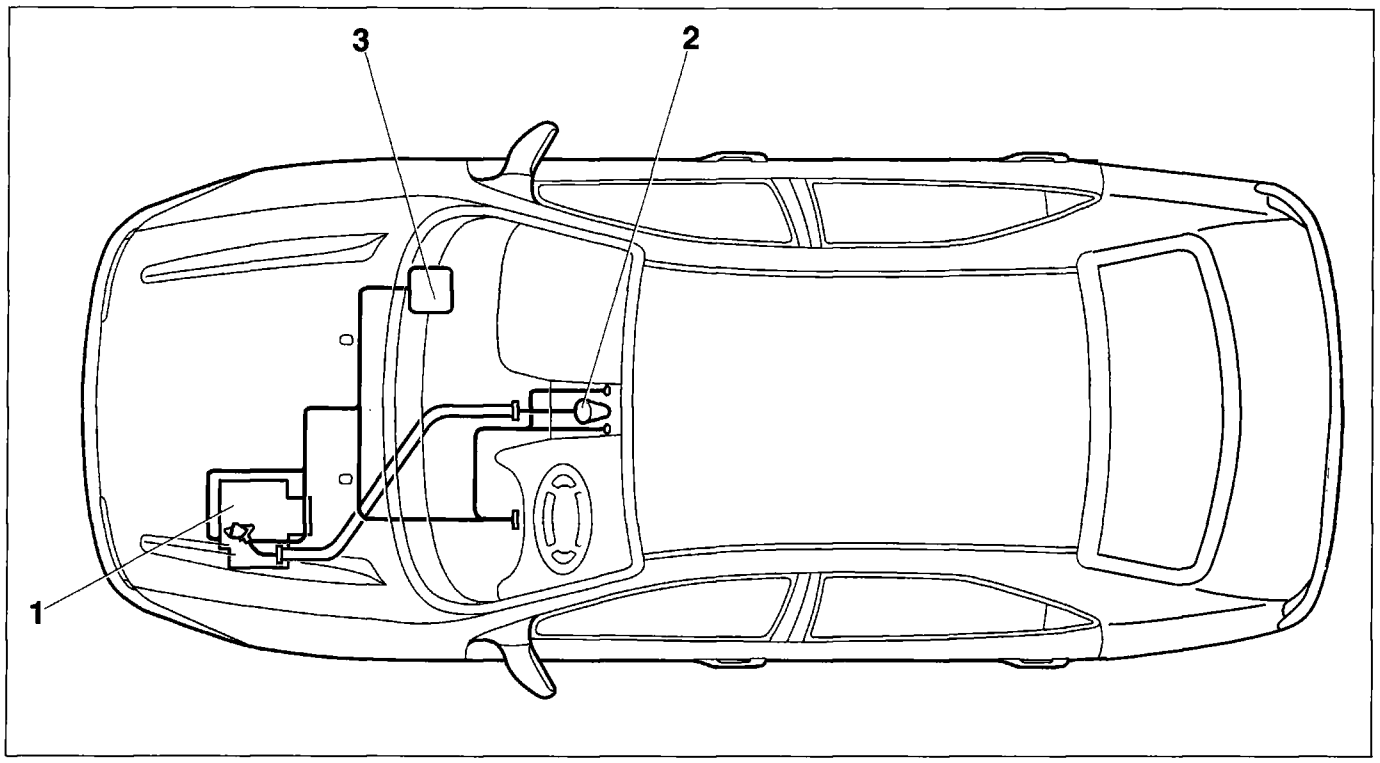

P4F01AB01

1. Gearbox-differential unit
2. Selector lever
3. Control module

The electronic control logic for the automatic transmission is in an "intelligent" control unit (or control module), located under the dashboard by the glove compartment.
The control module is connected to the various sensors/actuators located on the gearbox, engine and dashboard, the control unit of the fuel injection/ignition for exchanging information relating to the engine and the instrument panel for displaying the operating conditions.

The mechanical unit of the automatic transmission comprises:
- an oleodynamic torque converter, with a lock-up clutch which locks the converter in the higher ratios;
- two epicyclic gear sets, located on the main shaft;
- a band brake B1, a multiple disc brake B2 and four multiple disc clutches, operated hydraulically; there are also two free wheels, which lock the various gearing components to obtain the four forward gears and reverse gear;
- a parking lock, consisting of a gear with ratchet gear which locks the gearbox when the gear lever is in the P (Park) position.

The control module interacts in the hydraulic operation of the gearbox, issuing the appropriate operating commands to the clutches and brakes via four solenoids, contained in a valve unit located at the front of the automatic transmission.

Copyright Fiat Auto

21-27.

Cross section of automatic transmission and differential

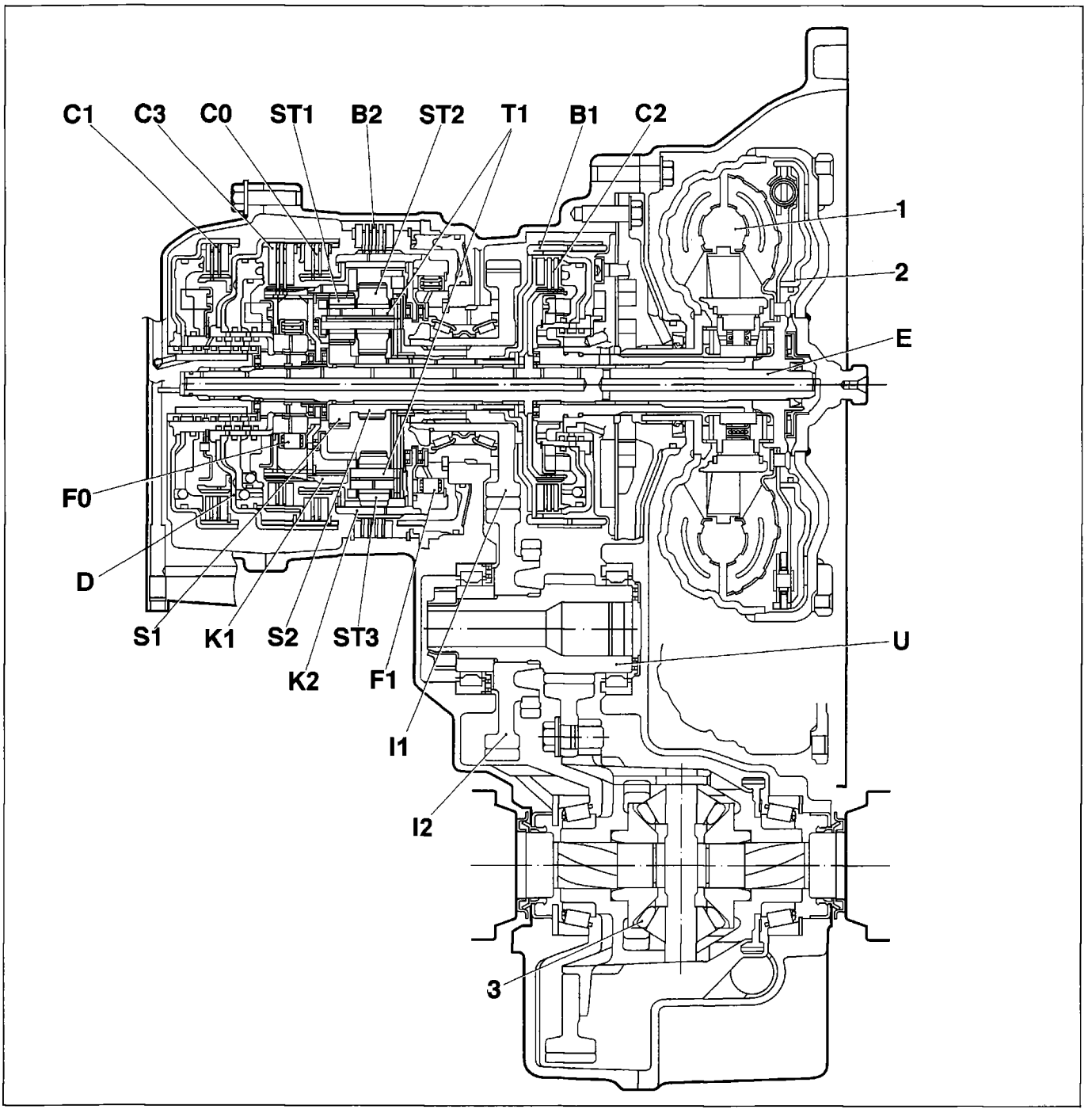

P4F02AB01

1. Torque converter
2. Lock-up clutch
3. Differential

B1. Band brake
B2. Multiple disc brake
C0. Multiple disc clutch
C1. Multiple disc clutch
C2. Multiple disc clutch
C3. Multiple disc clutch
D. Clutch carrier drum
E. Drive input shaft
F0. Free wheel
F1. Free wheel
I1. Main shaft drive output gear
I2. Layshaft gear
K1. Epicyclic gear set P1 crownwheel
K2. Epicyclic gear set P2 crownwheel
S1. Epicyclic gear set P1 sun gear
S2. Epicyclic gear set P2 sun gear
ST1. Epicyclic gear set P1 planet gear
ST2. Epicyclic gear set P2 inner planet gear
ST3. Epicyclic gear set P2 outer planet gear
T1. P1 and P2 epicyclic gear train carrier
U. Relay shaft

SELECTOR LEVER

To select a gear, use the selector lever located on the central console, which comprises a safety button (2) to protect against accidental gear engagements. It is connected to the automatic transmission via a flexible cable, and it acts on the valve unit and on an electrical device through which a coded electrical signal indicating the lever's position (P, R, N, D, 3, 2, 1) is transmitted to the control module.

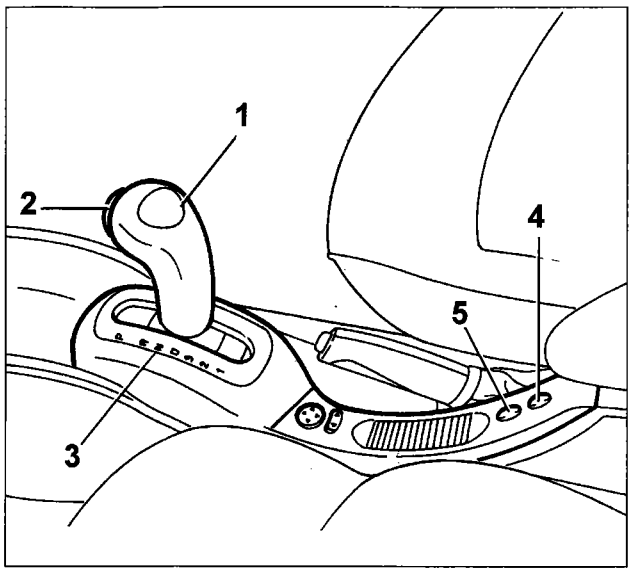

P4F03AB01

1. Selector lever
2. Safety button (to prevent accidental gear engagement)
3. Lever position display
4. NORMAL/SPORT button (this is for switching over from NORMAL mode to SPORT mode and vice versa)
5. ICE button (for driving on slippery roads)

The following positions may be set using the selector lever:

P *Park*	The drive wheels are locked (the engine can be started)
R *Reverse*	Reverse ratio (the reversing lights come on)
N *Neutral*	Neutral position (the engine can be started)
D *Drive*	Automatic operation of the gearbox on all four ratios
3 *3rd gear*	Automatic operation of the gearbox on the first 3 ratios (the change to 4th gear is inhibited)
2 *2nd gear*	Automatic operation of the gearbox on the first 2 ratios (the change to 3rd and 4th gears is inhibited)
1 *1st gear*	Operation only in 1st gear (with engine braking effect)

TORQUE CONVERTER

The purpose of the torque converter is to hydraulically transmit power from the engine to the gearbox, and to increase the torque when the vehicle is accelerating. The rotary motion is transmitted to the epicyclic gearing through two shafts:

- the layshaft which engages on the lock-up clutch.
- the gearbox main shaft which engages in the hub of the converter turbine;

The converter comprises (see figure on next page) a pump P connected to the crankshaft, a turbine T connected to the gearbox main shaft, and a stator S connected to the gearbox outer casing. The converter is filled completely with oil which, because of the kinetic energy impressed upon it by the pump, permits the transmission of the driving torque.

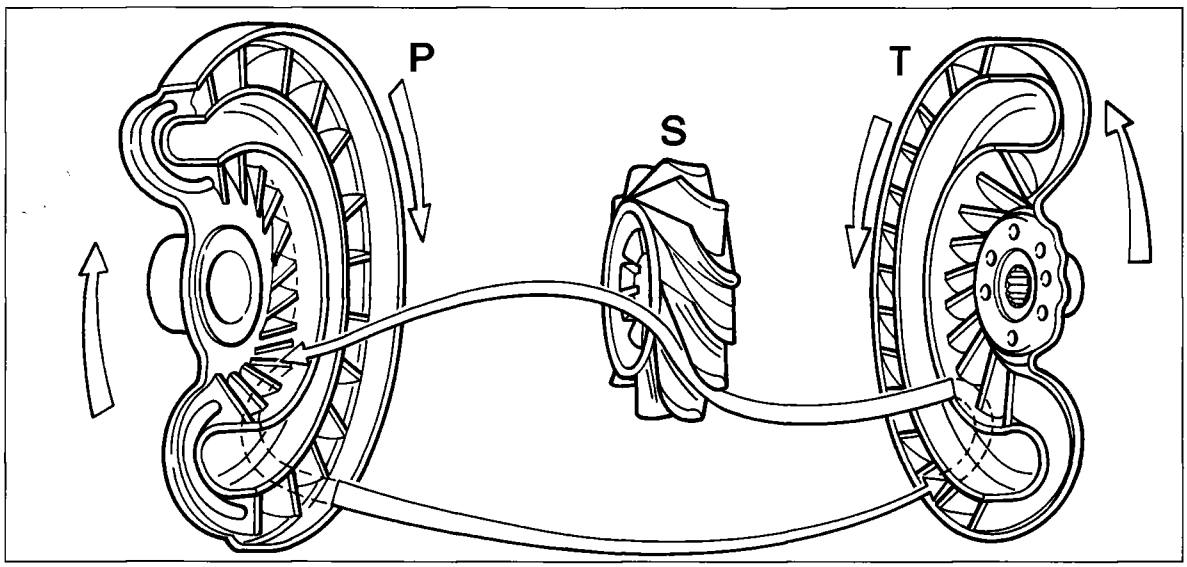

P4F04AB01

P. Pump

S. Stator

T. Turbine

NOTE *The torque converter does not sustain any kind of wear as there is no mechanical connection between the driven part and the driving part.*

The impeller P is connected to the crankshaft and, rotating in a clockwise direction, acts as a pump, transmitting its energy to the oil.
The centrifugal force pushes the oil towards the periphery of the impeller, where it flows at high speed towards the turbine T. Here the oil's kinetic energy impresses a clockwise rotary movement to the turbine.
The oil then passes through the stator S, where it is diverted in accordance with an angle which permits it return to the pump with high efficiency. The stator is connected to the gearbox casing by means of a free wheel engagement system, which prevents its rotation in an anti-clockwise direction and provides a reaction torque, proportional to the oil flow diversion, which is added to that of the turbine.

The ratio between the torque acting on the turbine and that provided by the pump is known as torque multiplication ratio and is proportional to the difference in speed of rotation between pump and turbine.

With the wheels stopped, the torque is around double that delivered by the engine.
As the turbine speed increases, the torque multiplication decreases continuously and tends to reach the ratio of 1:1, corresponding to a turbine speed of 85-90% of the pump speed. When the turbine and pump speeds are almost the same, the stator is enveloped by an oil flow directed at an angle which makes it change its direction of rotation and, as it is not blocked by the free wheel, it rotates in a clockwise direction without impediment and the torque converter behaves like a simple hydraulic joint.

LOCK-UP CLUTCH

In first, second and reverse gears, the driving torque is transmitted by the torque converter.
In third and fourth gears, the torque is transmitted first hydraulically by the converter, and secondly mechanically via the lock-up clutch. The lock-up clutch, by connecting the pump to the converter's turbine when the speed increases, eliminates the internal slipping of the converter and provides a mechanical coupling between the engine and the gearbox main shaft.
The locking of the torque converter allows the performance of the transmission to be improved at high speeds, leading to a reduction in fuel consumption on long motorway journeys.

The lock-up clutch is switched on by the control module via the lock-up solenoid SL, at the higher gears (3rd and 4th gears), when it is no longer necessary to multiply the driving torque supplied by the torque converter.

The solenoid SL opens, discharging the oil pressure from the chamber A, while the pressure in the converter continues to act on the face B: the clutch, fitted on the turbine hub, is then pushed against the casing connected to the converter's pump, thus locking the converter.

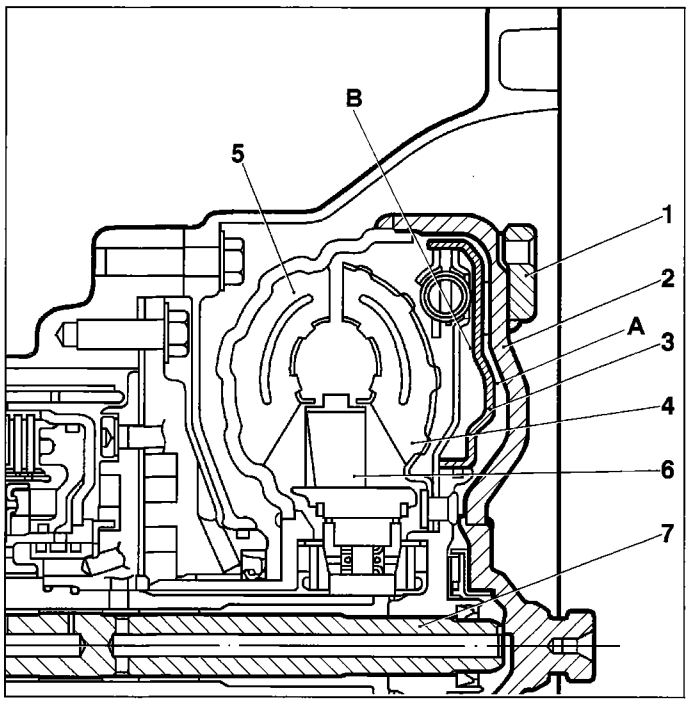

P4F05AB01

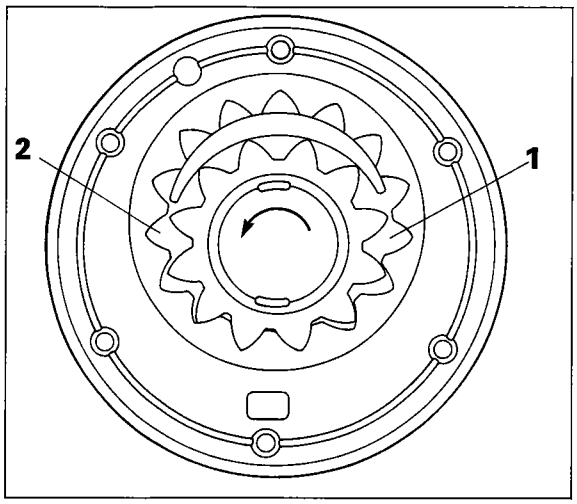

P4F05AB02

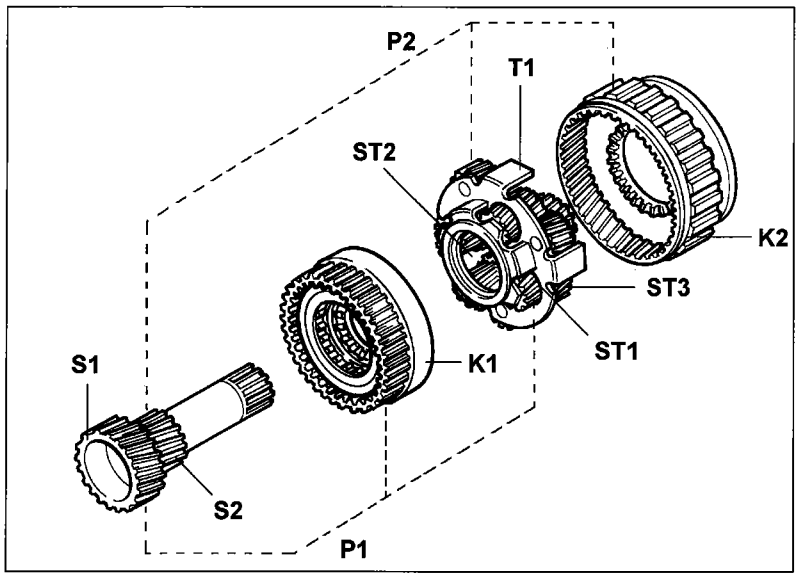

P4F05AB03

1. Flywheel attachments
2. Casing connected to pump
3. Lock-up clutch
4. Turbine
5. Pump
6. Stator
7. Drive input shaft

OIL PUMP

The oil pump used for the AISIN automatic transmission is of the inner gear type.
It is located between the torque converter and gearbox casing, and is driven directly by the converter pump impeller.

The functions of the oil pump are as follows:
- to provide the necessary pressure to the hydraulic control system and the gearbox control components (clutches and brakes);
- to send an oil flow into the torque converter case in order to cool it and to be able to operate the lock-up clutch;
- to lubricate the moving components of the gearbox;
- to circulate oil in the cooling system.

Structure of the oil pump

1. Inlet side
2. Delivery side

EPICYCLIC GEAR SETS

The AISIN automatic transmission uses two epicyclic gear sets for obtaining the five transmission ratios (4 forward gears + reverse gear).

The rear gear set P1 is a simple epicyclic gear set comprising a sun gear S1, four planet gears ST1 and a crownwheel K1.
The front gear set P2 consists of an epicyclic gear set comprising a sun gear S2, four inner planet gears ST2, four outer planet gears ST3 and a crownwheel K2.
The shafts of the planet gears ST1, ST2 and ST3 are attached to the gear train carrier T1.

Epicyclic gear sets P1 and P2

K1. Crownwheel of **P1**
K2. Crownwheel of P2
S1. Sun gear of **P1**
S2. Sun gear of **P2**
ST1. Planet gears di P1
ST2. Inner planet gears of P2
ST3. Outer planet gears of P2
T1. Gear train carrier

Copyright Fiat Auto

21-27.

CONTROL COMPONENTS

The control components of the automatic transmission consist of clutches, multiple disc brakes, band brakes and free wheels, which prevent the relative rotation between two components of the epicyclic gear sets, or between one of them and the outer casing, to achieve the four forward gears and reverse gear.

Clutches

Four clutches are used in the AISIN automatic transmission, and they are all of the multiple disc type. They are activated by the valve assembly located in the gearbox hydraulic control system.

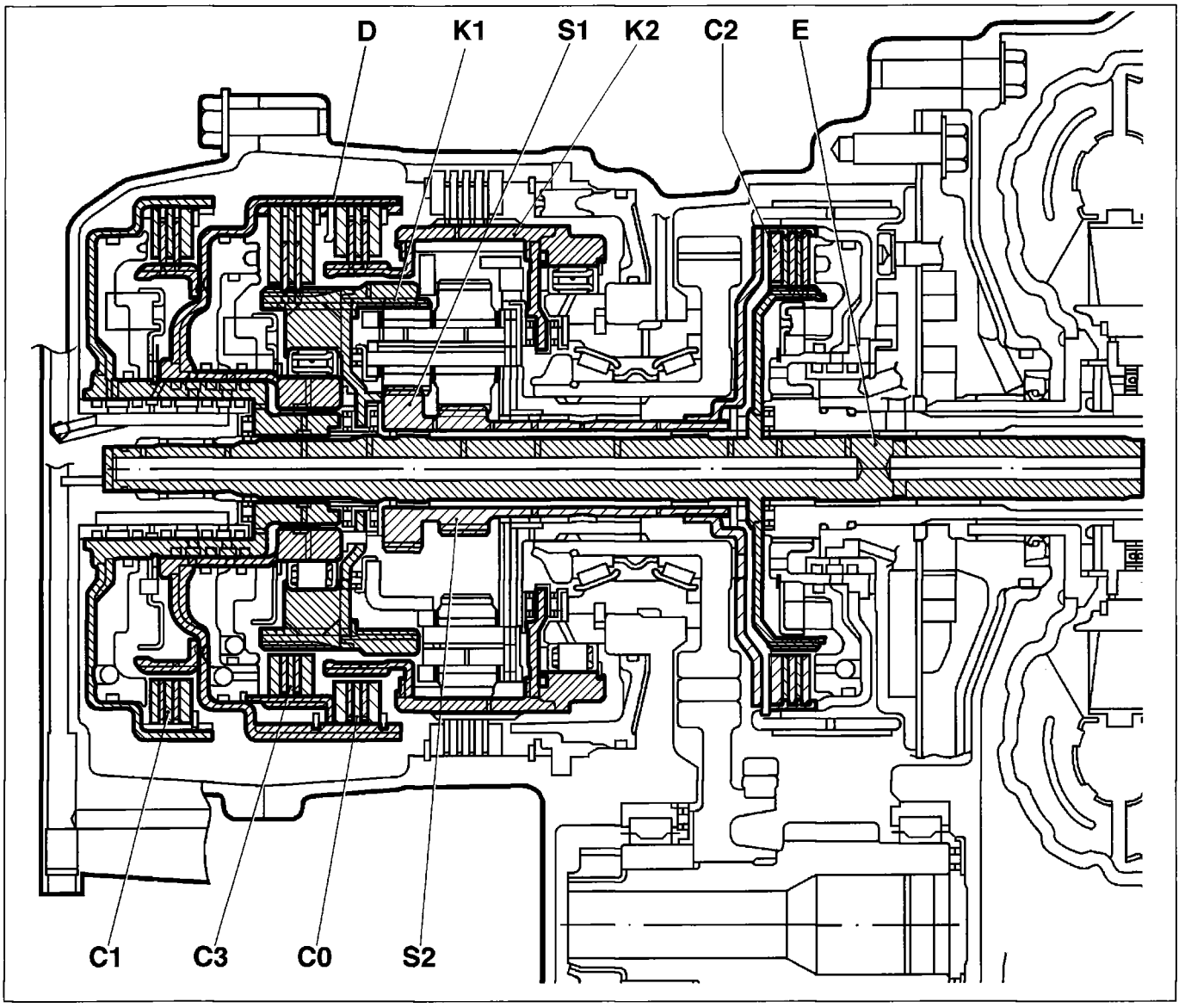

P4F06AB01

When engaged, the clutch C1 couples the gearbox input shaft E to the clutch carrier drum D.

When engaged, the clutch C2 couples the gearbox input shaft E with the shaft E on which there are the two sun gears S1 and S2 of the gear sets P1 and P2.

When engaged, the clutch C3 couples the clutch carrier drum D with the crownwheel K1 of the epicyclic gear set P1; in this way the crownwheel K1 receives motion from the gearbox input shaft E through C1-C3.

When engaged, the clutch C0 couples the clutch carrier drum D with the crownwheel K2 of the epicyclic gear set P2; in this way the crownwheel K2 receives the motion from the gearbox input shaft E through C1-C0.

Brakes

There are two brakes in the AISIN automatic transmission, one of the multiple disc type (B2), and one band brake (B1).

They are activated by the valve assembly located in the gearbox hydraulic control unit.

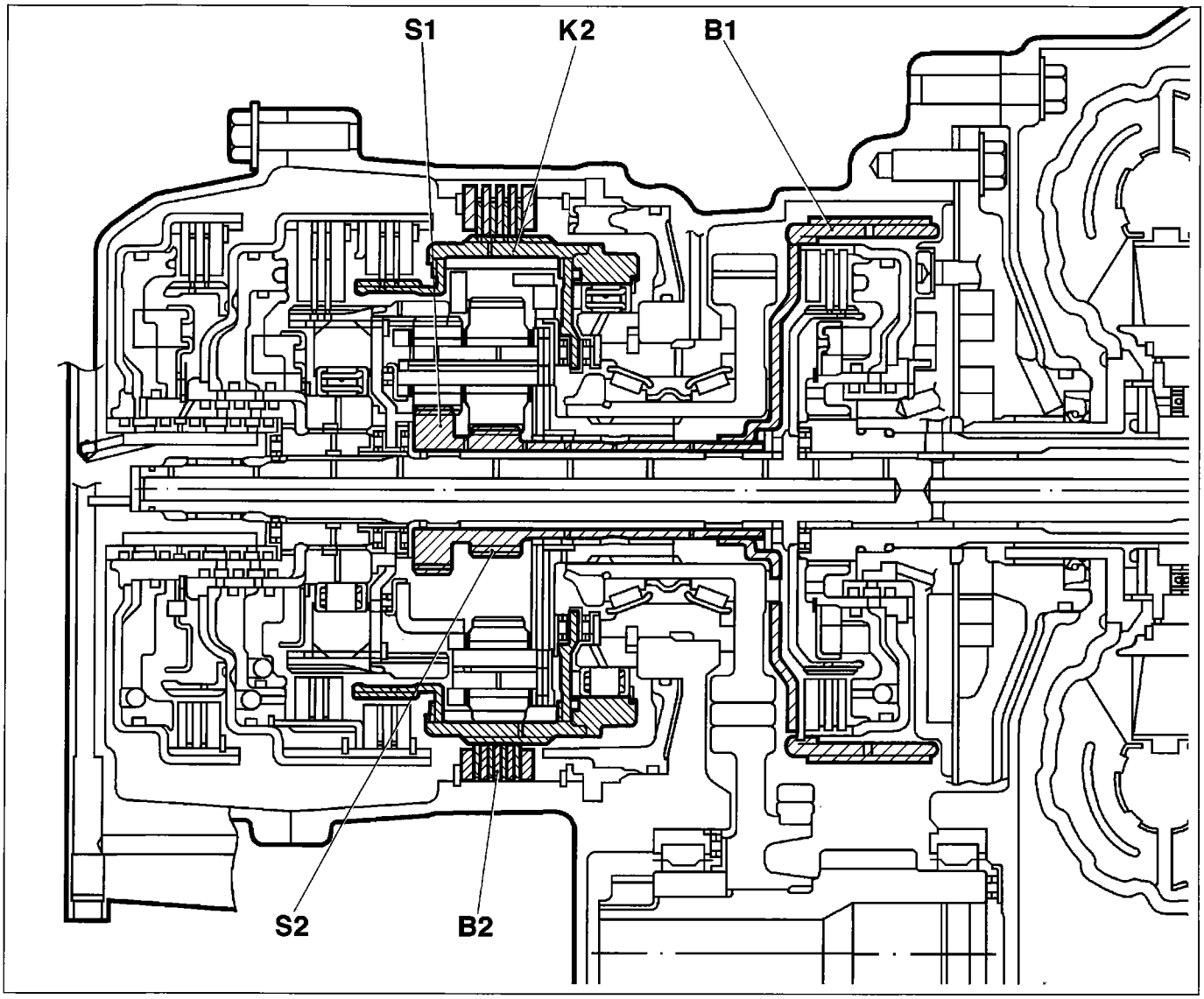

P4F07AB01

The band brake B1 blocks the rotation of the sun gears S1 and S2 (connected to each other), which form part of the gear sets P1 and P2.

The multiple disc brake B2 blocks the rotation of the crownwheel K2 of the gear set P2.

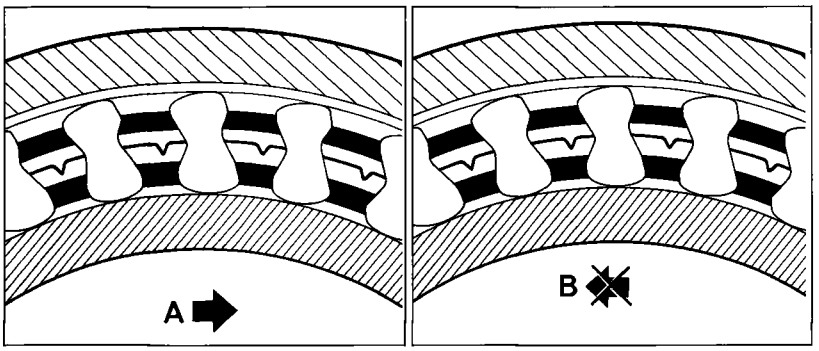

P4F08AB01 P4F08AB02

Free wheels
The free wheels consist of two concentric races and a cage enclosing a set of asymmetrical pawls, which permit the relative rotation of the two races in a particular direction (A), while in the opposite direction the pawls jam, preventing relative rotation and providing a reaction torque.

The roller clutch F0 connects the clutch carrier drum D and crownwheel K1 of the gear set P1 when the clutch C1 is active, and the motion comes from the gearbox input shaft.
The roller clutch F1 prevents the anti-clockwise rotation of the crownwheel K2 of the gear set P2.

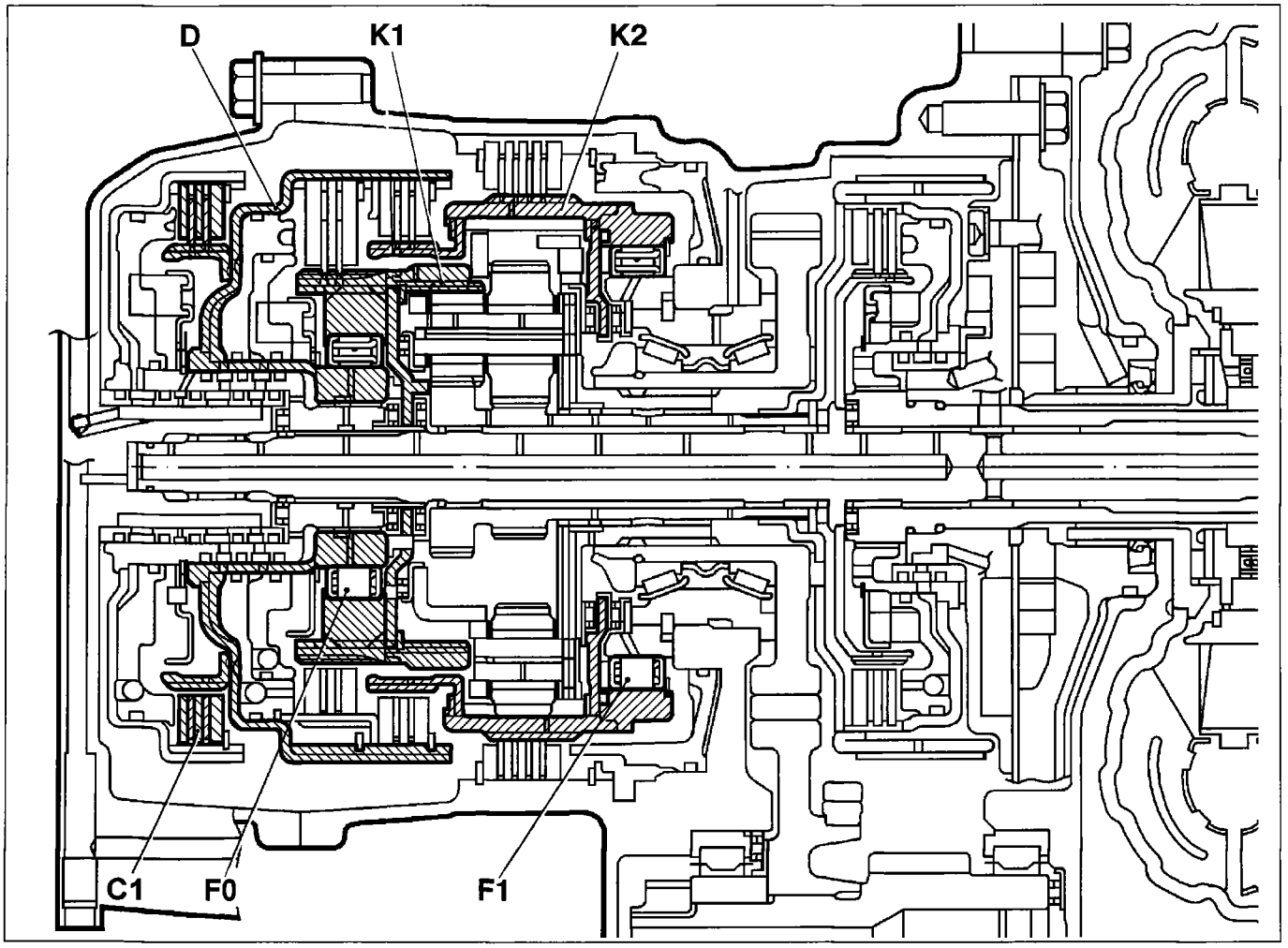

P4F08AB03

HYDRAULIC CONTROL SYSTEM

The operation of the automatic transmission is made possible by the operation of the clutches and brakes, via hydraulic actuators driven by valves which move in accordance with the commands issued by the control module. The feed is provided by a gear pump, driven directly by the engine through the torque converter.

A cooling radiator and fan controlled by a thermal switch keeps the oil temperature within pre-established limits.

TRANSMISSION OF MOTION

The diagram below illustrates in a simplified manner the composition of the gear sets and control components (clutches, brakes and free wheels) of the gearbox.
The same diagram will be used on the following pages to illustrate the intervention of the various control components during the different stages of operation.

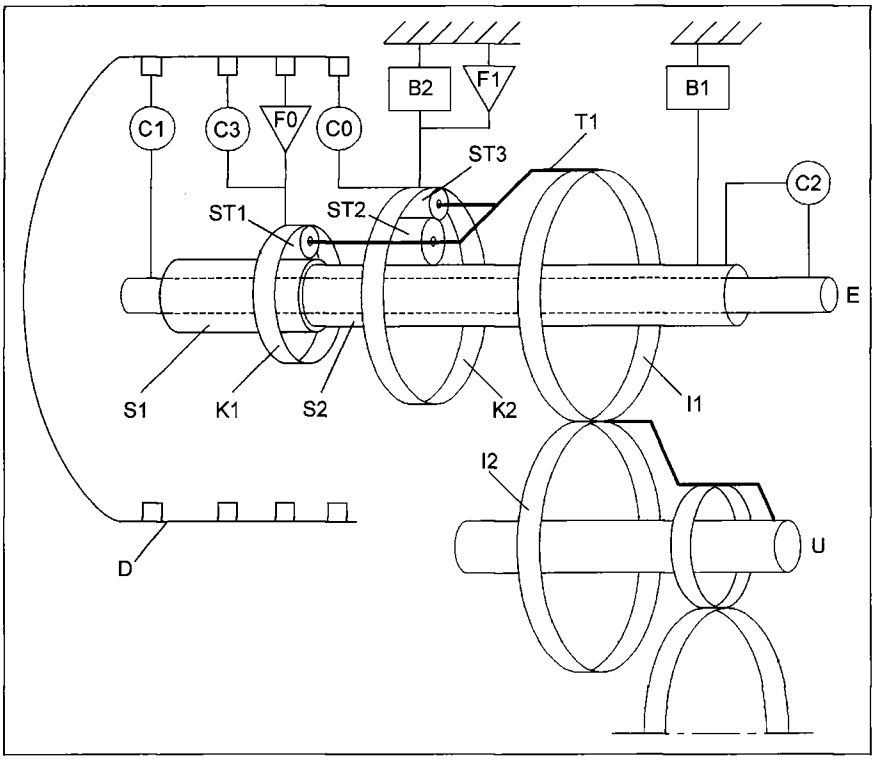

B1. Band brake
B2. Multiple disc brake
C0. Multiple disc clutch
C1. Multiple disc clutch
C2. Multiple disc clutch
C3. Multiple disc clutch
D. Clutch carrier drum
E. Drive input shaft
F0. Free wheel
F1. Free wheel
I1. Main shaft drive output gear
I2. Layshaft gear
K1. Crownwheel - epicyclic gear set P1
K2. Crownwheel - epicyclic gear set P2
S1. Sun gear - epicyclic gear set P1
S2. Sun gear - epicyclic gear set P2
ST1. Planet gear for epicyclic gear set P1
ST2. Inner planet gear for epicyclic gear set P2
ST3. Outer planet gear for epicyclic gear set P2
T1. P1 and P2 epicyclic gear train carrier
U. Relay shaft

The table below gives the conditions of activation of the components depending on the gear engaged and the position of the selector lever.

Selector lever position	Gear engaged	Control solenoids			Clutches				Brakes		Free wheels	
		S1	S2	SL	C1	C2	C3	C0	B1	B2	F1	F0
P	Park	○					○					
R	Reverse (*)	○				○	○			○		
	Neutral (**)		○			○	○					
N	Neutral	○					○					
D	1st	○			○		○				○	○
	2nd	○	○		○		○		○			○
	3rd		○	○	○		○	○				○
	4th			○	○			○	○			
3	1st	○			○		○				○	○
	2nd	○	○		○		○		○			○
	3rd		○	○	○		○	○				○
2	1st	○			○		○				○	○
	2nd	○	○		○		○		○			○
	3rd		○	○	○		○	○				○
1	(1st)●	○			○		○			○	○	○
	(2nd)●	○	○		○		○		○			○

NOTE ○ = *Solenoid activated* (*) *Speed* ≤ 7km/h (**) Speed > 7km/h
(●) Intermediate selection in manual scale.

21-27.

Neutral (selector lever on position **N**)

The gearbox input shaft **E** rotates in a clockwise direction.
The clutch **C3** couples the crownwheel **K1** to the clutch carrier drum **D**, to permit the transmission of motion without delays or stresses, caused by the simultaneous engagement of several clutches and brakes, when the selector lever is positioned on **R** or **D** (1st gear).
The multiple disc clutches **C1** - **C0** - **C2** and brakes **B2** - **B1** are disengaged, so the epicyclic gear sets **P1** and **P2** do not receive motion, thus isolating the differential relay shaft **U** from the gearbox input shaft **E**.

NOTE *The parking lock is off, so the planet gears* **ST1** - **ST2** - **ST3** *are free to rotate around the sun gears* **S1** *and* **S2**, *allowing the vehicle to move if it is on a slope.*

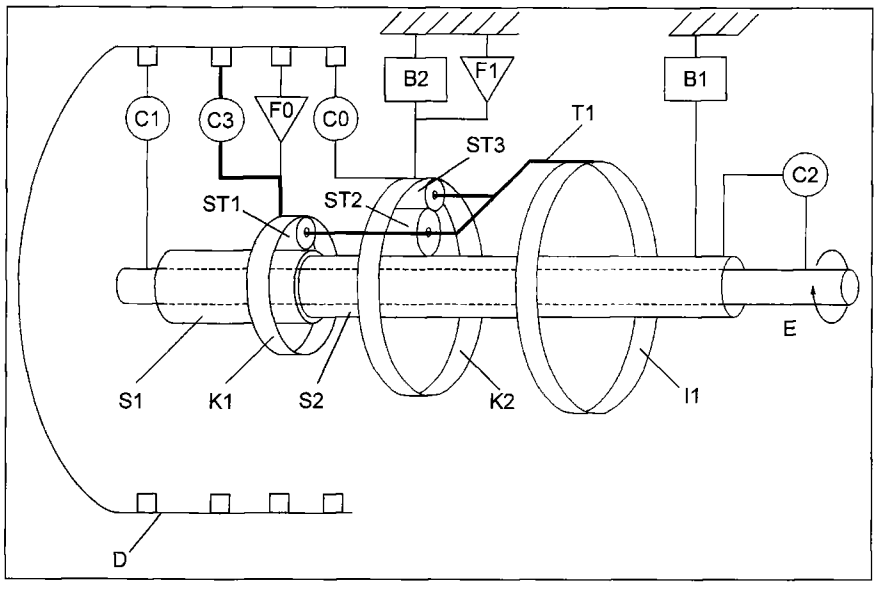

P4F10AB01

Park (selector lever on position **P**)

The control components are as described for position **N**, with the sole difference that the parking lock (ratchet P) is engaged, preventing the vehicle from moving.

First gear (selector lever on position **1**)

The gearbox input shaft **E** rotates in a clockwise direction.
The crownwheel **K1** is coupled to the input shaft **E**, by the engagement of the multiple disc clutch **C1**, the clutch carrier drum **D** and clutch **C3** (already engaged with **N** or **P** selected).

The clutch **C3** locks the free wheel **F0**. The crownwheel **K2** is locked to the gearbox casing by the engagement of the multiple disc brake **B2.** The brake **B2** locks the free wheel **F1.** The planet gears **ST1**, driven by the crownwheel**K1** of the epicyclic gear set **P1** rotate in a clockwise direction and via the sun gears **S1** and **S2** transmit motion, reduced and in a clockwise direction, to the planet gears **ST2** of the epicyclic gear set **P2**.

The planet gears **ST3**, driven by the planet gears **ST2**, rotate anti-clockwise and, by the reaction on the locked crownwheel **K2**, shift and rotate in a clockwise direction the gear train carrier **T1** and gear **I1**. The gear **I1** transmits motion to the wheels via the gear **I2** and the differential relay shaft **U**.

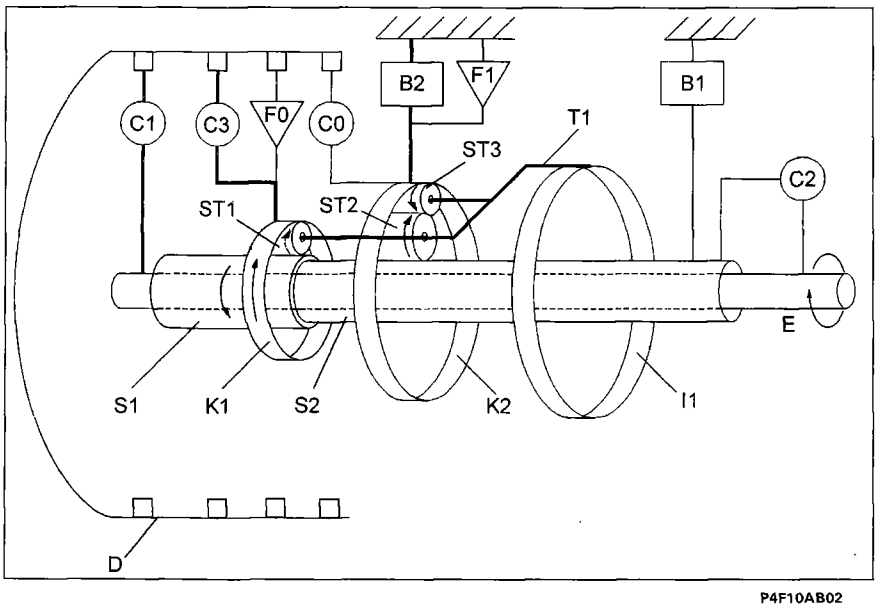

P4F10AB02

NOTE *Engaging the brake* **B1** *in 1st and reverse allows the engine to brake the vehicle in deceleration.*

First gear (selector lever on position **D-3-2**)

With the selector lever on one of the three positions, the gearbox functions in the same way and with the same transmission ratio as with the selector lever at position **1**, with the only difference that the crownwheel **K2** of the front gear set **P2** is not locked by the brake **B2**.

As the torque which acts on the crownwheel **K2** is much higher than that acting on the gear train carrier **T1**, the crownwheel would rotate in an anti-clockwise direction, but the free wheel **F1** prevents this rotation, permitting transmission of motion to the gear train carrier, and so to the differential relay shaft **U**, as in the previous case.

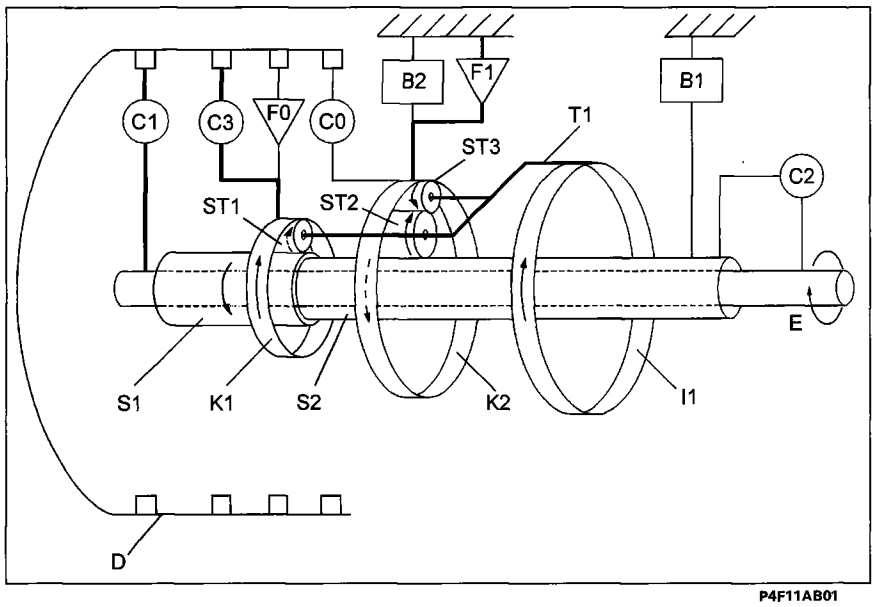

P4F11AB01

However, in this case there is no engine braking effect, as the crownwheel **K2** can rotate freely in a clockwise direction, allowing the gear train carrier **T1** to rotate at a higher speed than that imposed by the transmission ratio.

Second gear (selector lever on position **D-3-2-1***)

*** selected manually (recovery)**

The gearbox input shaft **E** rotates in a clockwise direction.

The crownwheel **K1** is coupled to the input shaft **E**, by the engagement of the multiple disc clutch **C1**, clutch carrier drum **D** and clutch **C3** (already engaged with **N** or **P** selected).
The clutch **C3** locks the free wheel **F0**.

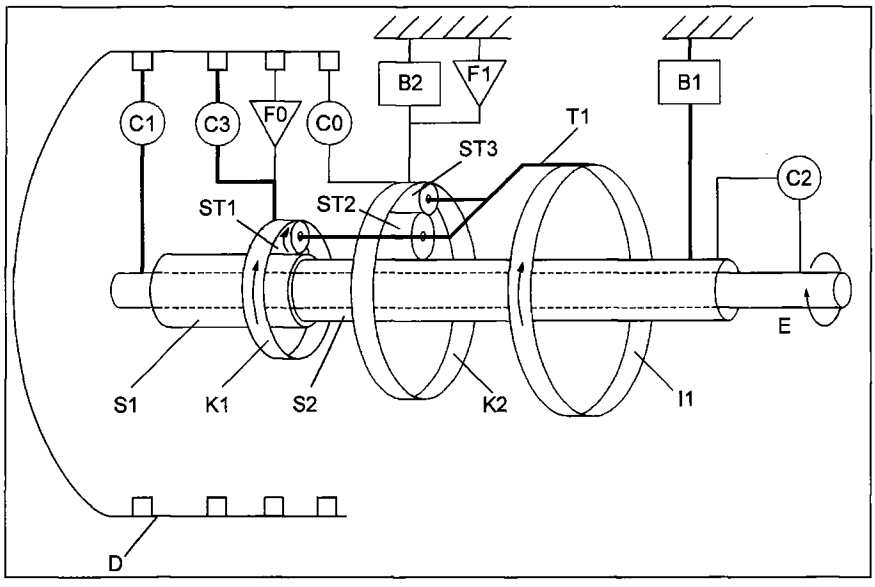

P4F11AB02

The sun gear **S1** is locked to the gearbox casing by the engagement of the bank brake **B1**.

The planet gears **ST1**, driven by the crownwheel **K1** of the epicyclic gear set **P1** , rotate in a clockwise direction, shifting onto the locked sun gear **S1,** then they transmit motion in a clockwise direction to the gear train carrier **T1** and the gear **I1** coupled to it.

The gear **I1** transmits motion to the wheels via the gear **I2** and differential relay shaft.

21-27.

Third gear (selector lever on position **D-3**)

The gearbox input shaft **E** rotates in a clockwise direction.

The crownwheels **K1** and **K2** are coupled to the input shaft **E** by the engagement of the clutch **C1**, clutch carrier drum **D** and the clutches **C3** and **C0**.

The clutch **C3** locks the free wheel **F0**.

The epicyclic gear sets **P1** (**S1 - ST1 - K1**) and **P2** (**S2 - ST2 - ST3 - K2**) lock onto each other when their transmission ratios are different.

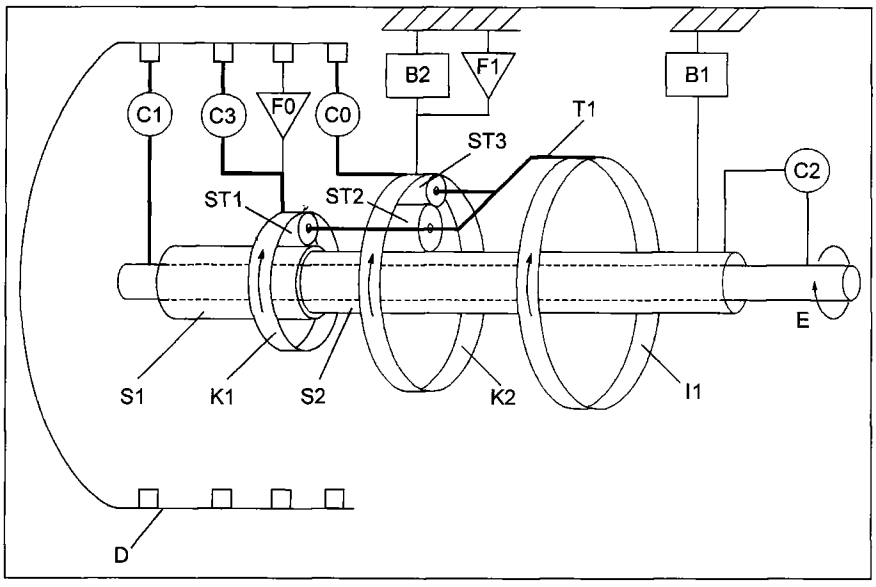

P4F12AB01

The planet gears **ST1, ST2** and **ST3**, locked, drive the gear train carrier **T1** at the same speed as the input shaft **E** (ratio 1:1).

The gear **I1** transmits motion to the wheels via the gear **I2** and the differential relay shaft **U**.

Fourth gear (selector lever on position **D**)

The gearbox input shaft **E** rotates in a clockwise direction.

The crownwheel **K2** is coupled to the input shaft **E** by the engagement of the multiple disc clutch **C1**, the clutch carrier drum **D** and the clutch **C0**.

The free wheel **F0** allows the crownwheel **K1** to rotate in a clockwise direction.

The sun gear **S2** is locked on the gearbox casing by the engagement of the band brake **B1**.

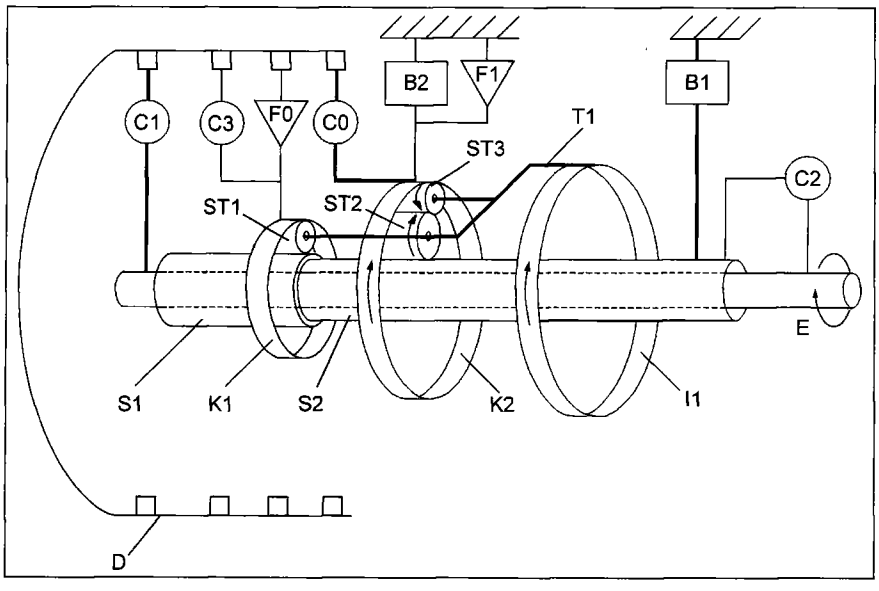

P4F12AB02

The planet gears **ST2,** driven by the crownwheel **K2** via the planet gears **ST3,** shift onto the locked sun gear **S2,** rotating in a clockwise direction the gear train carrier **T1.**

The clockwise shift of the gear train carrier **T1** makes the planet gears **ST2** rotate in a clockwise direction on the locked sun gear **S2**and the planet gears **ST3** in an anti-clockwise direction.

The anti-clockwise rotation of the satellites **ST3** on the crownwheel **K2** achieves a further increase in clockwise rotation of the gear train carrier **T1**.

The result is that the speed of the gear train carrier **T1** and the gear **I1** is higher than that of the driving crownwheel **K2**, obtaining 4th gear.

Reverse (selector lever on position **R**)

The gearbox input shaft **E** rotates in a clockwise direction.

The sun gears **S1** and **S2** are coupled by the input shaft **E**, by the engagement of the multiple disc clutch **C2**.

The clutch **C3** locks the free wheel **F0** and couples the crownwheel **K1** to the clutch carrier drum **D**.

The crownwheel **K2** is locked to the gearbox casing via the multiple disc brake **B2**.

The brake **B2** locks the free wheel **F1**.

The sun gear **S2**, coupled to the input shaft **E**, transmits motion anti-clockwise to the planet gears **ST2** and clockwise to the planet gears **ST3**.

The planet gears **ST3**, rotating clockwise, shift onto the locked crownwheel **K2**, thus making the gear train carrier **T1** and gear **I1** rotate anti-clockwise, obtaining reverse gear.

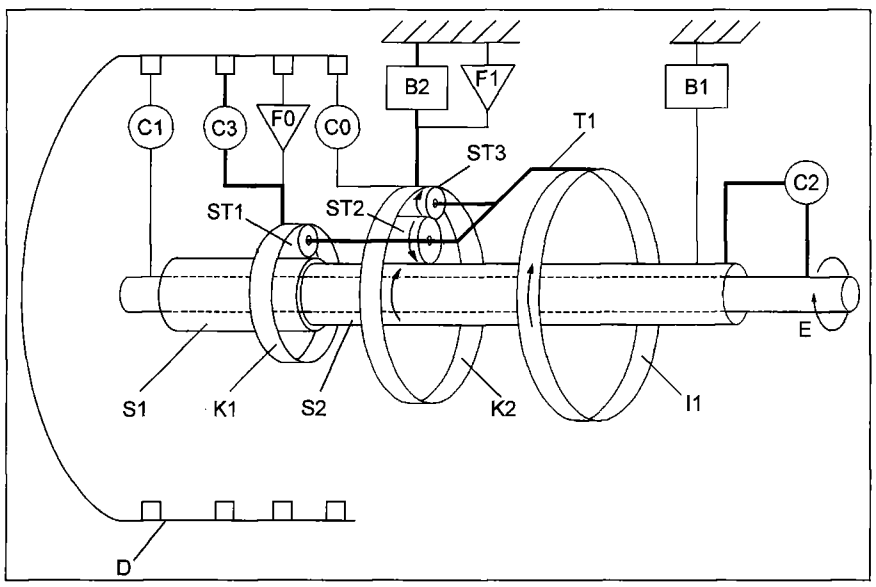

P4F13AB01

SAFETY CONTROL UNIT

The safety functions of the AISIN automatic transmission are managed by a special electronic control unit, and may be divided into two categories:

1. warning functions, which cause a buzzer to sound when:
   - the selector lever is shifted to position R;
   - a front door is opened when the selector lever is at a position other than P;
   - the engine is switched off with the selector lever in a position other than P;
2. functions which oblige the driver to carry out particular actions to allow:
   - the selector lever to be moved from position P with the engine running only with the brake pedal pressed;
   - the ignition key to be withdrawn only with the selector lever in position P.

21-27.

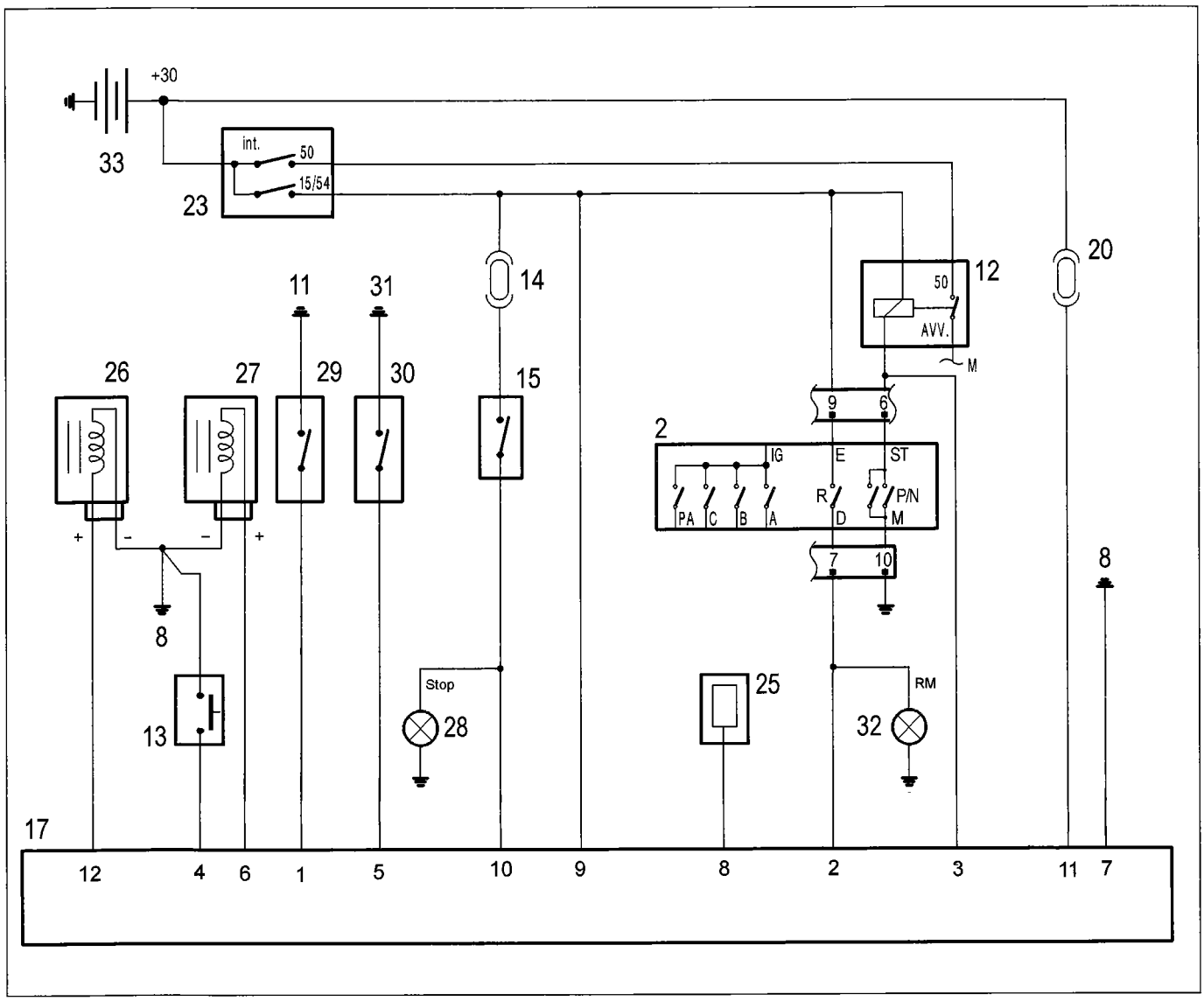

P4F14AB01

Wiring diagram of safety control unit connections

2. Selector lever position sensor
8. Rear earth
11. Left dashboard earth
12. Starter motor relay
13. PARK position additional switch
14. 15A fuse protecting STOP lights
15. STOP lights switch
17. Automatic transmission safety electronic control unit
20. 5A fuse protecting control module
23. Ignition switch
25. Speedometer signal
26. Ignition switch solenoid
27. Shift-lock solenoid
28. STOP lights
29. Front left button controlling courtesy light and door open indicator
30. Front right button controlling courtesy light and door open indicator
31. Right dashboard earth
32. Reversing lights
33. Battery

ELECTRONIC CONTROL SYSTEM

The electronic control system of the AISIN automatic transmission comprises a control module, some switches and sensors which inform the control module of the different operating conditions and four actuators which receive commands from the control module and interact with the hydraulic control system to obtain the engagement of the different gears.
The control module also sends signals to the instrument panel and exchanges information with the fuel injection/ignition control unit and diagnostic socket.

Location on the car of the control system components of the AISIN AW 596/Y024 automatic transmission

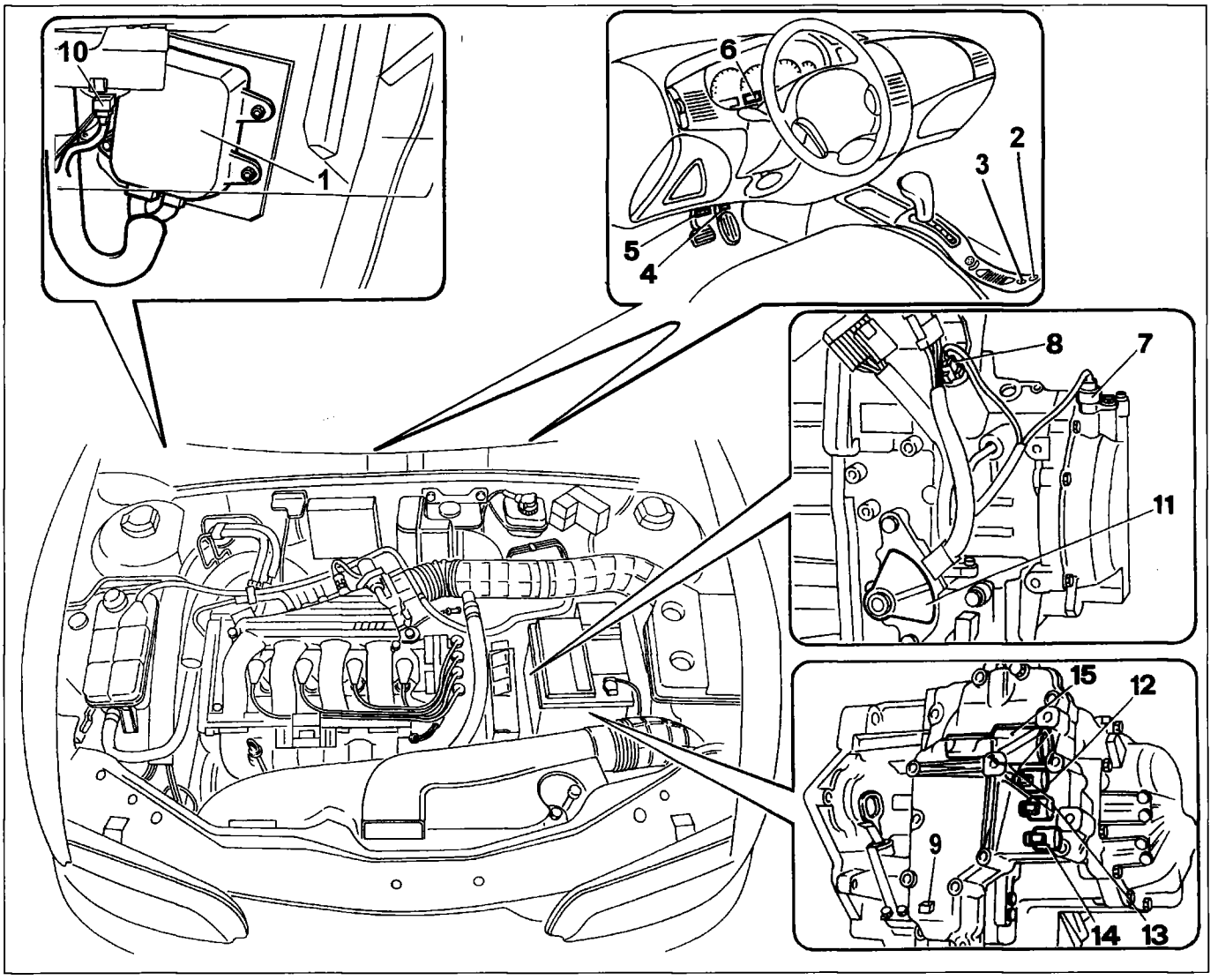

P4F15AB01

1. Transmission control unit
2. NORMAL/SPORT mode switch
3. ICE mode switch
4. Kick-down switch
5. Stop lights switch
6. Instrument panel
7. Main shaft rpm sensor (black)
8. Vehicle speed sensor (grey)
9. Gearbox oil temperature sensor
10. Diagnostic socket
11. Selector lever position sensor
12. Gear engagement solenoid S1
13. Gear engagement solenoid S2
14. Lock-up clutch solenoid SL
15. Pressure control solenoid STH

Copyright Fiat Auto

21-27.

CONTROL MODULE

The control module contains the electronic control logic of the automatic transmission, where the various functions are memorized, and is located under the rear seat.

The control module receives information concerning the operation of the automatic transmission from the various switches and sensors located on the gearbox, engine and dashboard, and issues the appropriate commands to four solenoids contained in a valve assembly located at the front of the automatic transmission, and to the fuel injection/ignition electronic control unit for reducing the driving torque under particular operating conditions.

Control module functions

In accordance with the commands received from the driver via the various switches and also the signals coming from the sensors concerning the operating conditions, the control module ensures the correct operation of the gearbox by means of the following functions:
- actuation of gear changes,
- locking of torque converter (lock-up function),
- execution of driving mode,
- hydraulic pressure variations,
- check on gear change times,
- check on gear changes,
- safety function,
- self-test function.

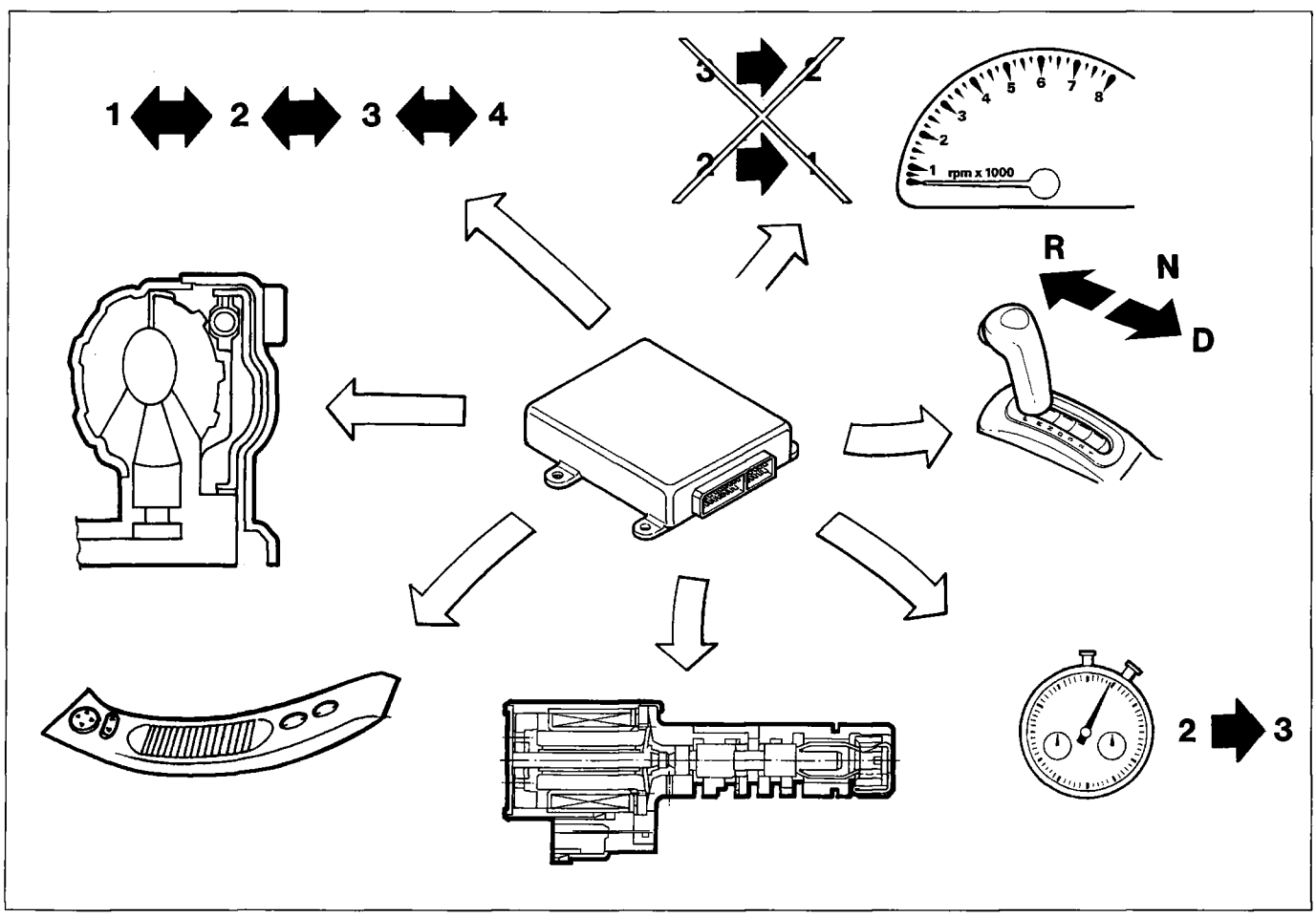

P4F16AB01

Diagram of input and output information to/from control module

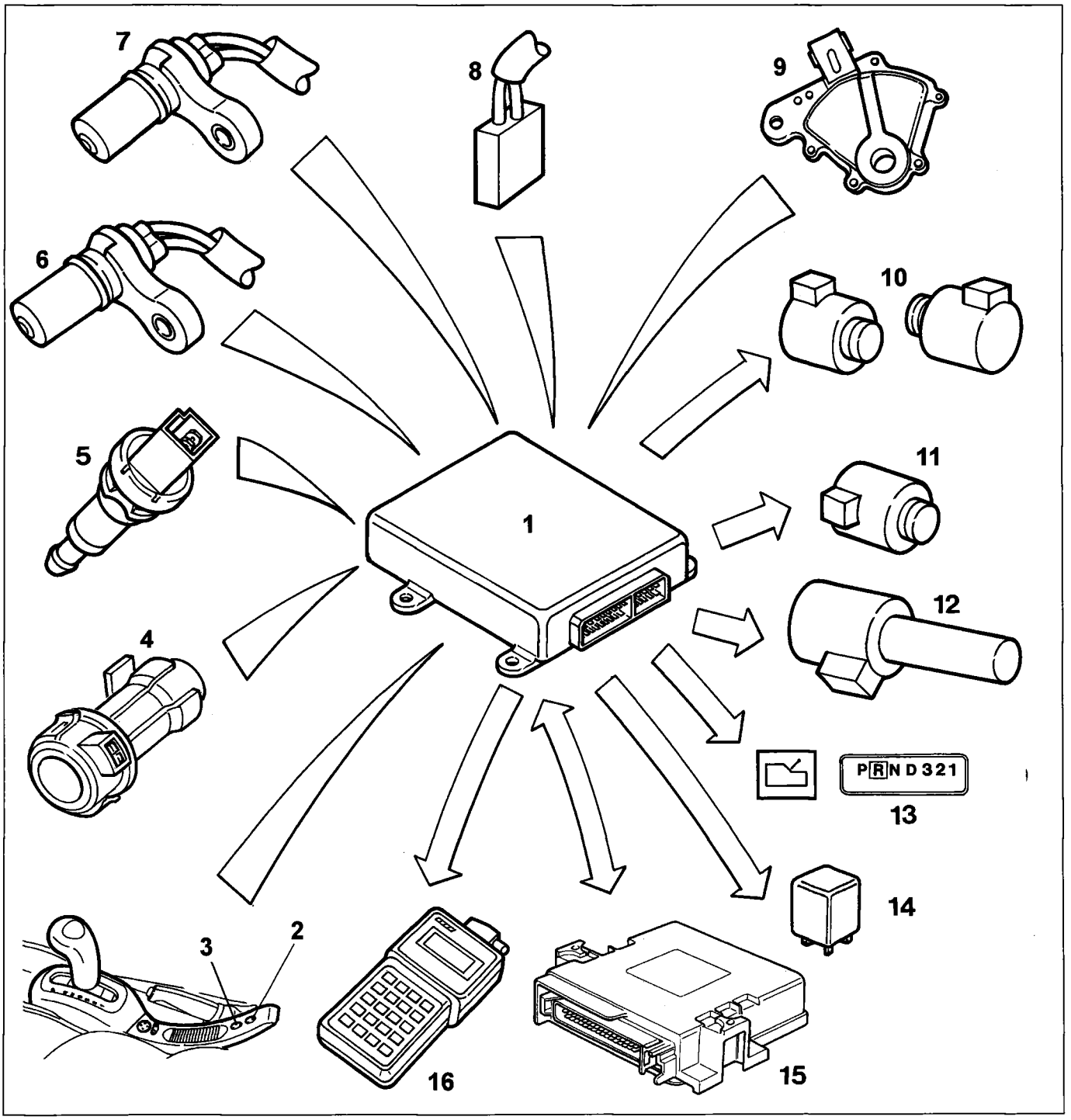

P4F17AB01

1. Control module
2. NORMAL/SPORT mode switch
3. ICE mode switch
4. Kick-down switch
5. Stop lights switch
6. Main shaft rpm sensor
7. Vehicle speed sensor
8. Gearbox oil temperature sensor
9. Selector lever position sensor
10. Gear engagement solenoids S1 and S2
11. Lock-up clutch solenoid SL
12. Pressure control solenoid STH
13. Instrument panel
14. Gearbox oil cooling fan relay
15. Fuel injection-ignition control unit
16. Diagnostic socket

Copyright Fiat Auto

21-27.

Identification of control module connections

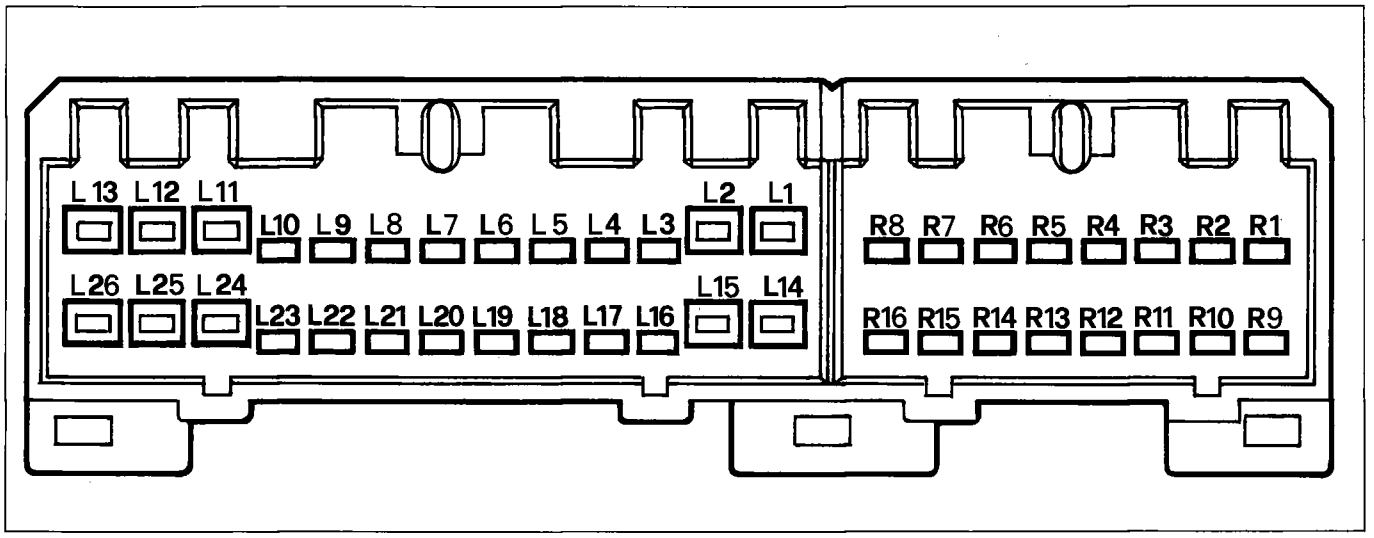

P4F18AB01

View of connector side of control module

Pin	Connection	Pin	Connection
R1	Input for throttle aperture signal (fuel injection/ignition control unit pin 44)	L1	Pressure control STH solenoid (-)
		L2	Earth on car
		L3	Selector lever position sensor (A)
R2	Earth for speed sensor cables	L4	NC
R3	Main shaft rpm sensor (-)	L5	Gearbox oil temperature sensor (-)
R4	Vehicle speed sensor (-)	L6	NC
R5	NORMAL/SPORT mode switch	L7	NC
		L8	Earth on vehicle
R6	Kick-down switch	L9	STOP lights switch
R7	Selector lever position sensor (C)	L10	Display on instrument panel - Selector lever position - Driving mode - Fault/high gearbox oil temperature sensor
R8	NC		
R9	Output for torque reduction signal (fuel injection/ignition control unit pin 32)		
R10	Input for engine coolant temperature signal (fuel injection/ignition control unit pin 5)	L11	Pressure control solenoid STH (+)
		L12	Battery positive
		L13	Solenoid S1
R11	Main shaft rpm sensor (+)	L14	NC
R12	Vehicle speed sensor (+)	L15	NC
R13	NC	L16	Selector lever position sensor (B)
R14	ICE mode switch	L17	NC
R15	NC	L18	Gearbox oil temperature sensor (+)
R16	Selector lever position sensor (PA)	L19	Gearbox oil cooling fan relay
		L20	NC
		L21	Diagnostic socket earth (line G)
		L22	Diagnostic socket (line L)
		L23	Diagnostic socket (line K)
		L24	Lock-up clutch solenoid SL
		L25	Key-dependent positive (MAR)
		L26	Solenoid S2

OPERATING STRATEGIES

Actuation of gear changes

The change from one gear to the higher or lower gear depends on the accelerator pedal position, the vehicle speed, the engine's characteristic parameters and the driving mode selected by the driver.
The control module sends an ON/OFF signal to the solenoids S1 and S2.
They consent or prevent the oil from reaching the brakes and clutches necessary for obtaining the different transmission ratios, changing their condition from ON to OFF and vice versa as shown in the table below.

Gear	Solenoid S1	Solenoid S2
1st	ON	OFF
2nd	ON	ON
3rd	OFF	ON
4th	OFF	OFF

The 3rd-4th gear change is prevented when the engine coolant temperature is below 75°C.

The control module has specific gear change programs memorized for each driving mode (NORMAL, SPORT, ICE), which will be described on the following pages in the section relating to the driving modes.

Locking of torque converter (lock-up function)

The engagement of the lock-up clutch for locking the torque converter depends on the gear engaged, the accelerator pedal position, the vehicle speed and the selected driving mode.
The control module sends a duty-cycle signal to the lock-up control solenoid SL, which discharges the oil pressure in the chamber on the flywheel side, causing the clutch to be engaged and the converter to be locked.

The control module has two specific programs for locking the torque converter memorized for the NORMAL and SPORT driving strategies, while for the ICE strategy the torque converter is not locked.
These programs are described on the following pages in the section concerning the driving modes.

The converter is not locked under the following conditions:

1. when the control system receives a fault signal from one of the components and executes the recovery strategy;
2. when the brake pedal is pressed and the gearbox input speed is below a certain value;
3. when the throttle valve is closed (accelerator pedal not pressed) and the vehicle speed is below 125 km/h with the selector lever on position D;
4. when the engine coolant temperature is below 75°C.

During the 3rd-4th gear change, with lock-up clutch engaged, the control module sends to the solenoid SL a signal with variable duty cycle, so as to temporarily disengage the lock-up clutch, to improve the quality of the gear change.

Execution of driving mode

The control module is designed to control the operation of the automatic transmission in accordance with three different driving modes.
The three driving modes allow the driver to select the different capabilities of the automatic transmission in accordance with the momentary requirements of use:
- NORMAL to obtain the maximum driving comfort, while minimizing fuel consumption;
- SPORT to obtain the maximum performance of the vehicle;
- ICE to increase driving safety under slippery conditions.

Copyright Fiat Auto

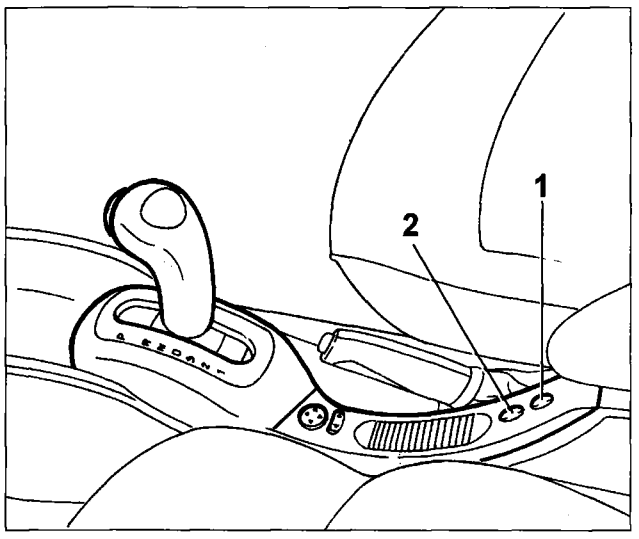

P4F20AB01

At every start-up, the system is set to the NORMAL mode.
When the NORMAL/SPORT pushbutton (1) is pressed, the NORMAL mode is changed to SPORT mode and vice versa.

When the ICE pushbutton (2) is pressed (with the lever in position D), the system uses the ICE mode and excludes the other two modes. When the NORMAL/SPORT button is pressed, the NORMAL strategy is resumed.

1. NORMAL/SPORT pushbutton switch
2. ICE pushbutton

The change from one strategy to the other may be made at any time during driving.
The selected strategy is displayed beside the indication of the selector lever position on the instrument panel.

P4F20AB02

Display of the operating strategy used and the selector lever position

The behaviour of the AISIN automatic transmission, in accordance with the driving mode (NORMAL, SPORT or ICE) used, is described below.
The characteristic curves of change between the four ratios and the locking of the lock-up clutch are shown, both during progression and during reduction of the ratio (scaling), expressed as a function of the percentage of aperture of the throttle valve and the vehicle speed.

Operation with NORMAL strategy
The NORMAL strategy is selected by the control module whenever the engine is started up.
With this operating stragegy, very gentle operation is ensured, aimed at optimizing driving comfort and economy of operation.

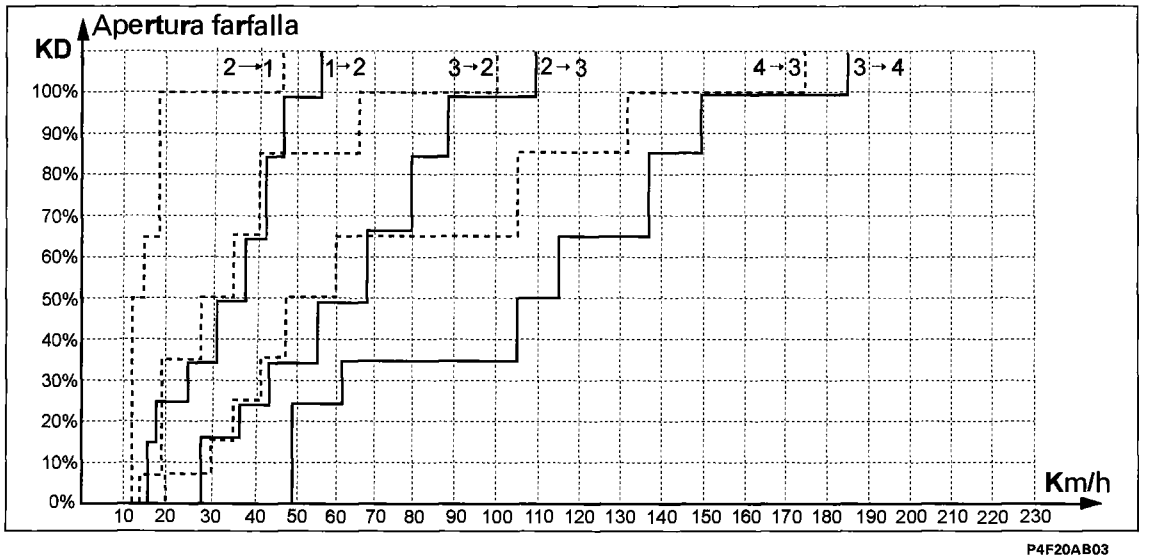

P4F20AB03

Gear change program

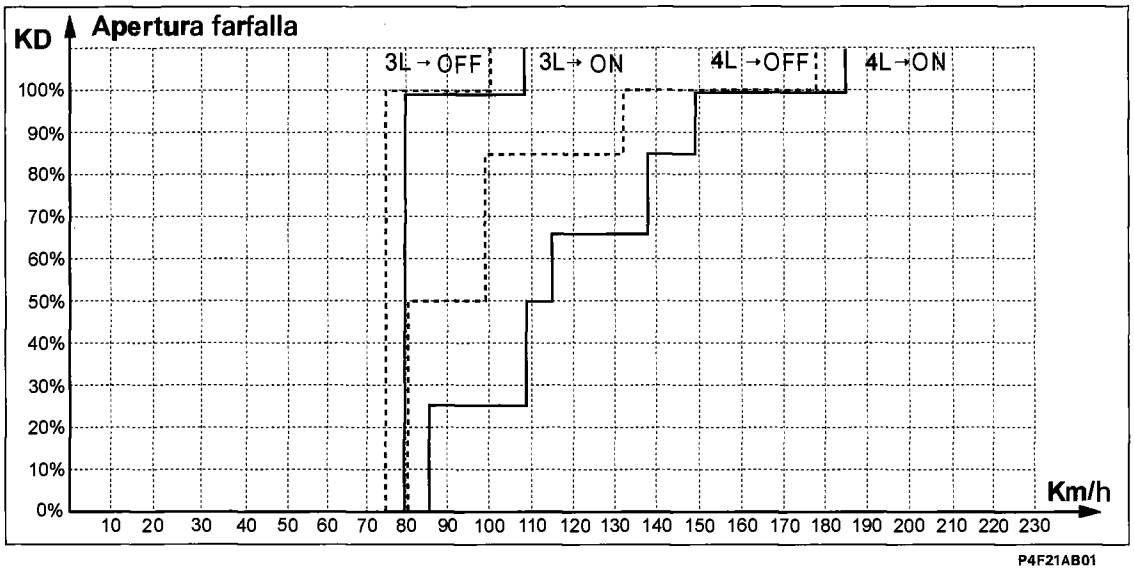

Lock-up program

Operation in SPORT mode

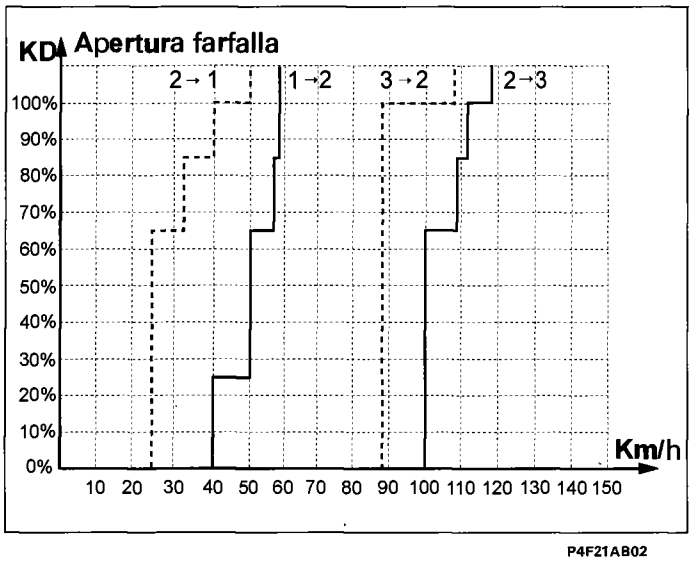

The control module switches to SPORT mode when the NORMAL/SPORT pushbutton located on the left of the selector lever is pressed.
This mode of use of the gearbox is designed to make full use of the power so as to obtain maximum performance from the vehicle; for the same aperture of the throttle valve, the changes to the higher ratios are automatically shifted to a higher engine speed.

The SPORT mode does not use 4th gear (cruising gear).

Gear change program

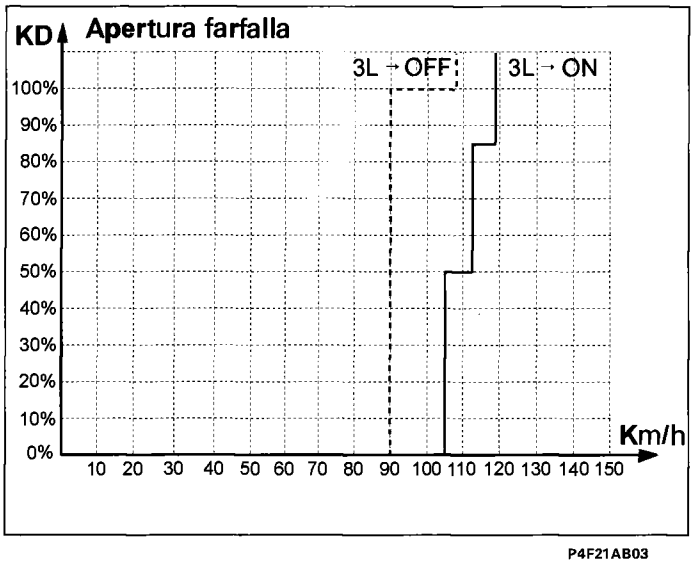

The SPORT mode is excluded in the following cases:

1. if the NORMAL/SPORT pushbutton is pressed again;
2. if the ICE pushbutton switch is pressed;
3. operation under recovery conditions.

Lock-up program

Operation in ICE mode

The ICE mode can be selected by pressing the ICE pushbutton located on the right of the selector lever, when the latter is at position D. This strategy improves driving safety on slippery roads by ensuring that the vehicle sets off gently by selecting 2nd gear on departure.
When the ICE mode is selected, the lock-up clutch is not locked.

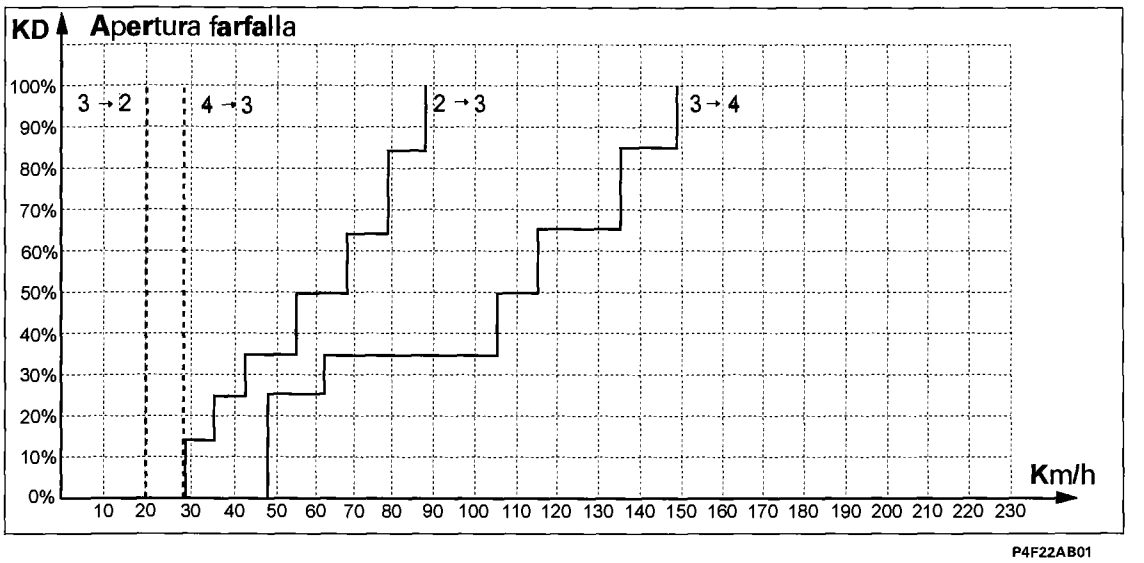

Gear change program

The ICE mode is excluded in the following cases:
1. if the NORMAL/SPORT button is pressed;
2. if the selector lever is at a position other than D;
3. if the engine is switched off;
4. if the transmission fluid temperature is over 150°C;
5. operation under recovery conditions.

The table below illustrates the ratios which the gearbox uses automatically while the vehicle is driving, in relation to the driving mode used and the selector lever position, and shows the transmission ratio used on departure.

Selected driving mode	Selector lever position	Ratio selected on departure	Automatic management			
			1	2	3	4
NORMAL	D	1st	↔	↔	↔	↔
	3	1st	↔	↔	↔	
	2	1st	↔	↔		
	1	1st	—			
SPORT	3	1st	↔	↔	↔	
	2	1st	↔	↔		
	1	1st	—			
ICE	D	2nd		↔	↔	↔

Hydraulic pressure variations

The pressures in the hydraulic system are regulated by the control module, in order to achieve the following functions:
- increase in line pressure when cold;
- reduction in line pressure in the N-R change;
- modulation of driving pressure.

Increase in line pressure when cold

With the selector lever at position N, when the transmission oil temperature is below 10°C and the vehicle speed is below 7 km/h, the control module sends a signal for a period of 5 seconds to the solenoid STH, to increase the line pressure, so enabling the N-D and N-R engagement time to be reduced.

This function is excluded in the following cases:
- transmission fluid temperature over 20°C;
- vehicle speed over 7 km/h;
- selector lever position other than N.

Reduction in line pressure in N-R change

When the selector lever is moved from position N to position R, the control module sends a signal to the solenoid STH to control the line pressure.
This makes the line pressure fall, so as to reduce the jolt caused by the engagement of reverse gear.

Modulation of driving pressure

The driving pressure of the hydraulic valves (throttle pressure) is increased by the control module, depending on the aperture of the throttle valve and the vehicle speed.

Control of gear change times

Comparing the ratios between the input and output speeds, provided by the main shaft rpm sensor and vehicle speed sensor respectively, with the memorized values of the transmission ratios of the different gears, the control module assesses the time used for the gear changes.

Controlling gear changes

In an automatic transmission, the engagement of gears causes jolts resulting from the sudden variation in transmission ratios; these are more pronounced when engaging 1st gear and reverse gear, which permit higher transmission ratios.

These jolts caused by the engagement of 1st gear and reverse gear are inconveniently perceptible for the occupants and also cause stresses on the gearbox gears.

To reduce these stresses and improve driving comfort, the AISIN automatic transmission uses the following features:
- engagement of 1st gear or reverse gear with a reduction in driving torque (garage function);
- N-D change with pitch control (squat);
- N-R change with reduction in line pressure.

Engagement of 1st gear or reverse gear (garage function)

When the selector lever is moved as follows:
- from P or N to R;
- from N to D (3-2-1);

with this function the control module sends a signal to the fuel injection-ignition control unit so as to reduce the driving torque, reducing the jolt caused by the engagement of 1st gear or reverse gear.

Copyright Fiat Auto

N-D change with pitch control (squat)

When the selector lever is moved from position N to position D, the control module temporarily engages 2nd gear, and thenn changes to 1st gear. In this way the jolt caused by the engagement of 1st gear and the resulting pitching movement of the vehicle are reduced.

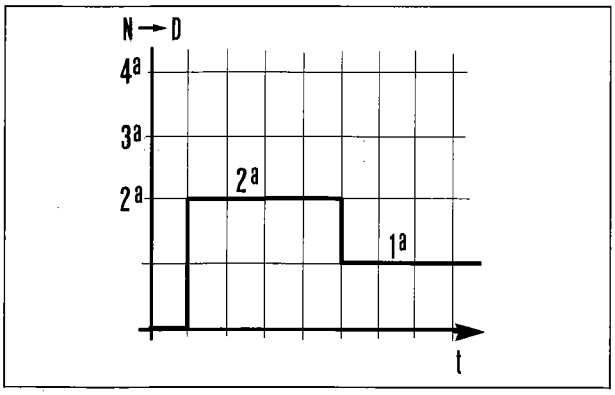

P4F24AB01

This function only intervenes if the following conditions arise simultaneously:
- brake pedal pressed (stop lights on);
- throttle valve closed (throttle aperture 0%);
- vehicle speed below 7 km/h;
- driving mode is NORMAL or SPORT;
- when the selctor lever is moved from position N to position D.

Inhibition of reverse gear

With the selector lever at position R, with a vehicle speed of over 7 km/h, the control module sends a signal to the gear change solenoids (solenoid 1 not activated -OFF- and solenoid 2 activated -ON-) inhibiting reverse gear.
The inhibition of reverse is deactivated in the following cases:
- vehicle speed below 5 km/h;
- selector lever position other than R.

Self-test

The electronic control system constantly monitors the sensors, control solenoids and all the other electronic components, in order to detect faults and malfunctions immediately; these errors are memorized in the control module and can be read using the FIAT/LANCIA Tester.

Error detection conditions

The control module can detector errors in the various components only under particular conditions. With the ignition set to ON or START, and in all other conditions, the following errors can be detected:

- error in gear change solenoid S1;
- error in gear change solenoid S2;
- error in lock-up clutch solenoid SL;
- error in pressure control solenoid STH;
- error in selector lever position sensor;
- error in throttle position sensor;
- error in kick-down switch;
- error in checking transmission of driving torque reduction signal;
- error in gearbox oil temperature sensor when it still indicates an oil temperature of below 10°C after the engine coolant has reached 75°C.

With the engine running, the following are detected:
- error in battery voltage;
- error in coolant temperature sensor after a period of 10 minutes.

With the vehicle moving, the following are detected:
- error in main shaft rpm sensor;
- error in vehicle speed sensor;
- error in transmission ratio, when the ratio between the main shaft rpm and vehicle speed differs for more than one second from the memorized transmission ratios;
- error in gearbox mechanism, when the gear change time exceeds 1.3 seconds or when the change down to a lower ratio is effected at a higher speed than the maximum permitted speed.

Memorization of errors

In the case of significant faults, the red warning light (1) on the instrument panel comes on.
If the gearbox oil temperature is over 150°C, the red warning light (1) remains permanently on.

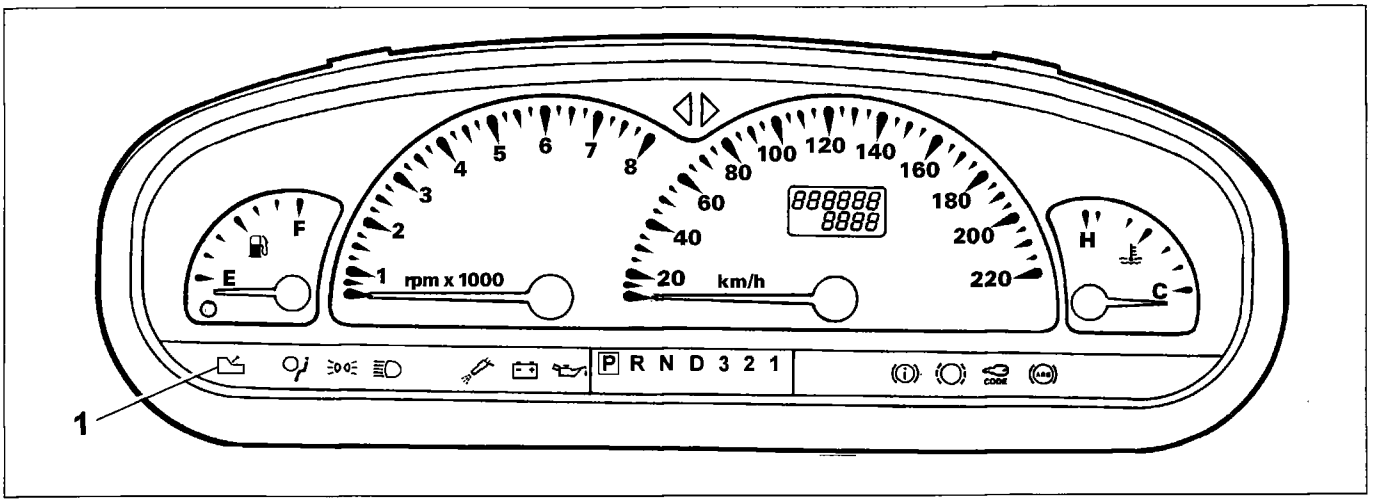

P4F25AB01

For each error, the control module memorizes:
- the component which caused the error (e.g. pressure control solenoid);
- the classification of the error (Present or Intermittent);
- the type of error (A.C./D.C. GND/D.C. Vbatt/etc.).

Error deletion

The errors memorized by the control module can be deleted by active diagnosis with the FIAT/LANCIA Tester or by disconnecting the battery for over 10 seconds.

Recovery strategies

If the control module detects a fault, the red warning light on the instrument panel flashes to warn the driver and, at the same time, the appropriate recovery strategy is activated to allow the car to reach the nearest Authorized Garage.

Main components

If the control module has memorized one of the following errors:

- errors in gear change solenoids S1 or S2;
- error in pressure control solenoid STH;
- error in selector lever position sensor;
- error in throttle position sensor;
- error in main shaft rpm sensor;
- error in vehicle speed sensor;
- error in transmission ratio;
- error in checking transmission of driving torque reduction signal;
- error in battery voltage;
- error in gearbox mechanism;

The recovery stragegy involves the deactivation of all the solenoids, so no automatic gear changes are effected, the torque converter is not locked and the hydraulic pressure is not varied.
The vehicle can travel because each position of the selector lever corresponds to the engagement of a particular transmission ratio, by the movement of the hydraulic distributor.

Selector lever position	R	D	3	2	1
Gear engaged	Reverse	4th	4th	3rd	1st

Lock-up control solenoid
In the case of error, the torque converter locking function is disabled.

Coolant temperature sensor
In the case of error, a substitutive value of 75°C is assigned.

Kick-down switch
In the case of error, it is considered ON if the throttle valve aperture is greater than 73.5%, OFF if it is less than 70%.

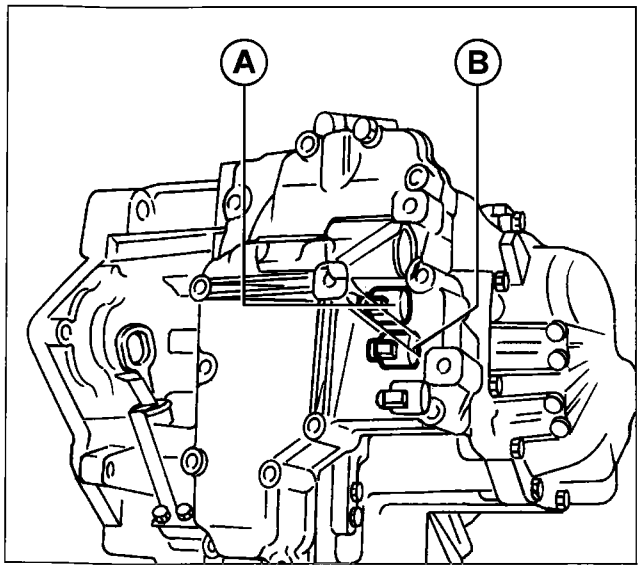

P4F26AB01

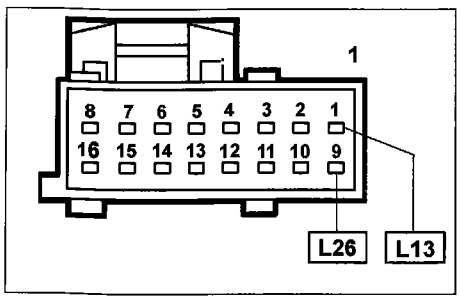

P4F26AB04

Gearbox sensors/actuators connector (view of contact side)

The resistance of the gear change solenoids S1 and S2 can be measured by disconnecting the connector and connecting an ohmmeter as shown in the figure.
Resistance: 13 ± 2 ohm at 20°C

GEAR CHANGE SOLENOIDS

The gear change solenoids S1 (A) and S2 (B) are located at the front of the gearbox and they manage the gear changes. The solenoids are actually normally closed (N.C.) electrovalves which, receiving a signal from the control module, change their position to allow the engagement of the different transmission ratios, in accordance with the following table.

Gear	Solenoid S1	Solenoid S2
1st	ON	OFF
2nd	ON	ON
3rd	OFF	ON
4th	OFF	OFF

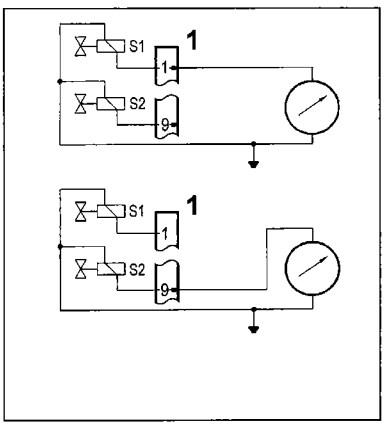

P4F26AB03

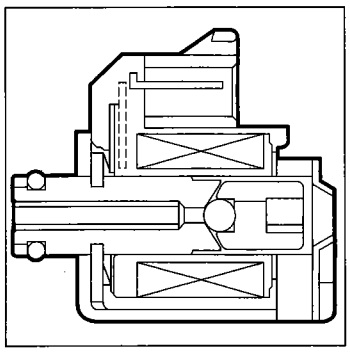
P4F26AB02

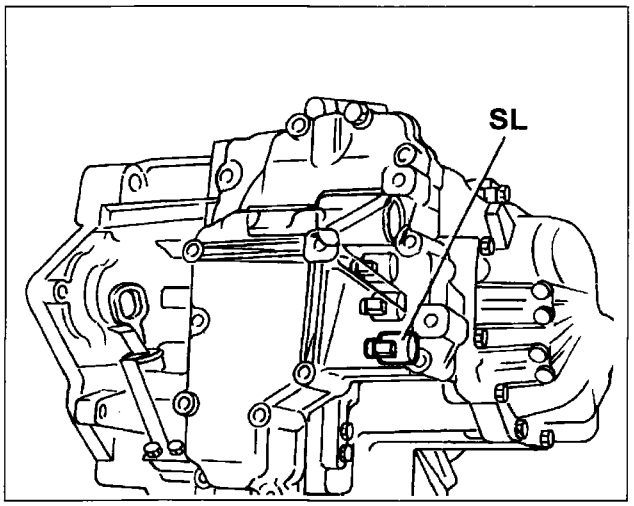

P4F27AB01

LOCK-UP CLUTCH CONTROL SOLENOID

The lock-up clutch control solenoid SL is located at the front of the gearbox and manages the locking of the torque converter.

The solenoid, controlled by a duty cycle signal sent by the control module, intercepts the passage of oil, discharging the pressure which acts on the rear face of the clutch.
The clutch, fitted on the turbine hub, is pushed by the pressure in the converter acting on its front face, against the casing joined to the converter pump, so locking it.

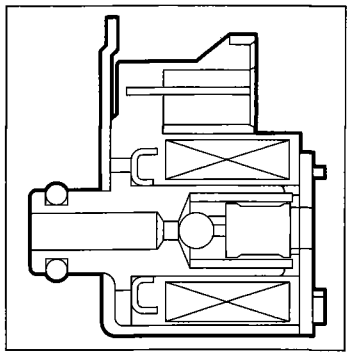
P4F27AB02

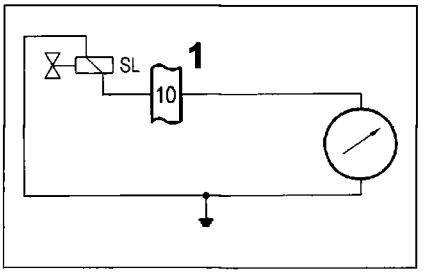

P4F27AB03

Resistance: 13 ± 2 ohm at 20°C

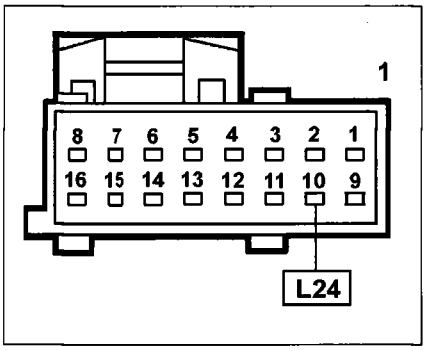

P4F27AB04

Gearbox sensor/actuator connector (view of contact side)

The resistance of the lock-up clutch control solenoid SL can be measured by disconnecting the connector and connecting an ohmmeter as shown in the figure.

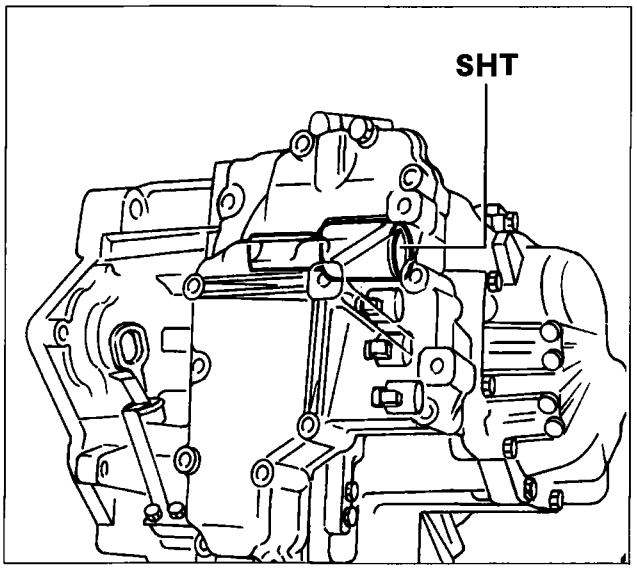

P4F27AB05

PRESSURE CONTROL SOLENOID

The line pressure control solenoid STH is located at the front of the gearbox and it manages the changes in hydraulic pressures.

The solenoid, also controlled by a duty cycle signal sent by the control module, regulates the hydraulic pressure acting on the brakes and clutches in order to reduce the gear engagement times when cold and the jolting on engagement of reverse.

The solenoid also regulates the pressure driving the hydraulic valves in accordance with the throttle valve aperture and the vehicle speed.

Copyright Fiat Auto

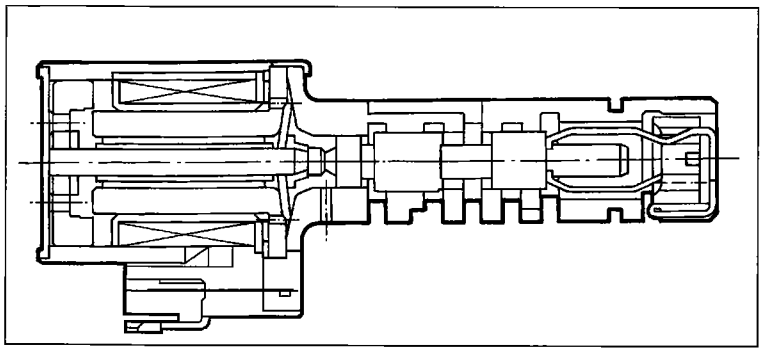

P4F28AB01

The resistance of the line pressure control solenoid STH can be measured by disconnecting the connector and connecting an ohmmeter as shown in the figure.

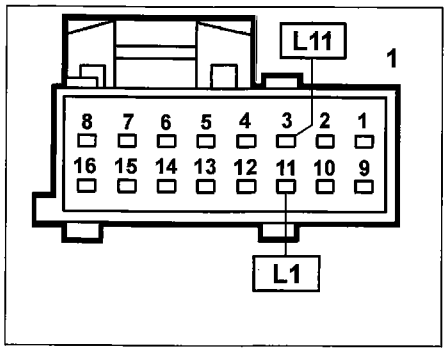

P4F28AB02

Gearbox sensors/actuators connector (view of contact side)

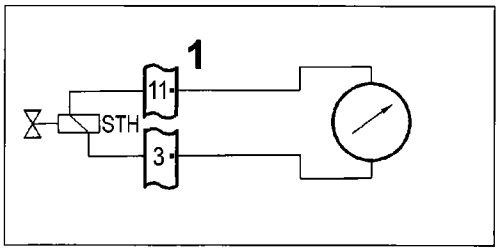

P4F28AB03

Resistance: 3.5 ± 0.2 ohm at 25°C

SELECTOR LEVER POSITION SENSOR

The sensor, located at the top of the gearbox casing, detects the position of the selector lever (to which it is connected mechanically) and informs the control module via an appropriate electrical signal. The module lights up the warning light on the instrument panel.

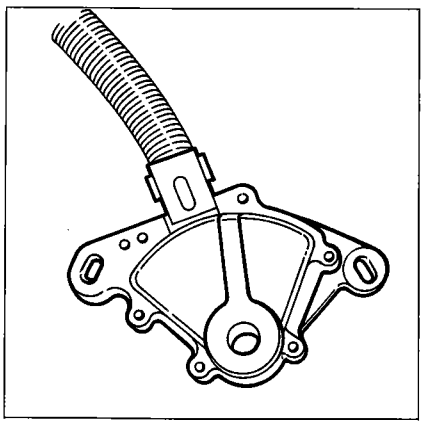

P4F28AB04

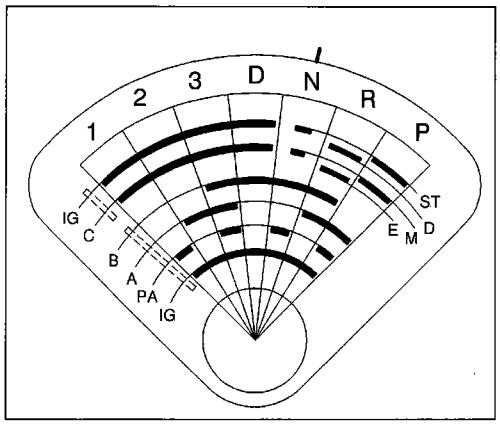

P4F28AB05

The sensor also switches on the reversing lights when reverse is engaged, and enables the starter motor only when the selector lever is at position N or P.

The combination output signals present on the various terminals of the sensor is shown in the following table.

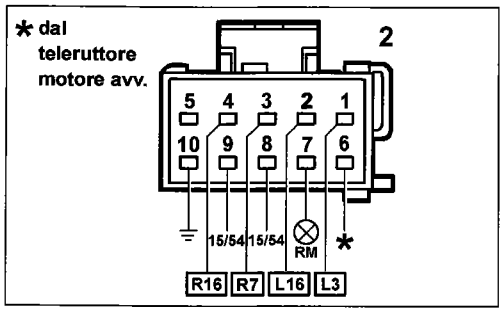

P4F28AB06

Lever position sensor connector (view of contact side)

Connectors	Start.		REV.						
Terminals	6	10	7	9	8	1	2	3	4
Signals	ST	M	D	E	IG	A	B	C	PA
P	•	•			•	•			•
R			•	•	•	•	•		
N	•	•			•		•		•
D					•		•	•	
3					•	•	•	•	•
2					•	•		•	
1					•			•	•

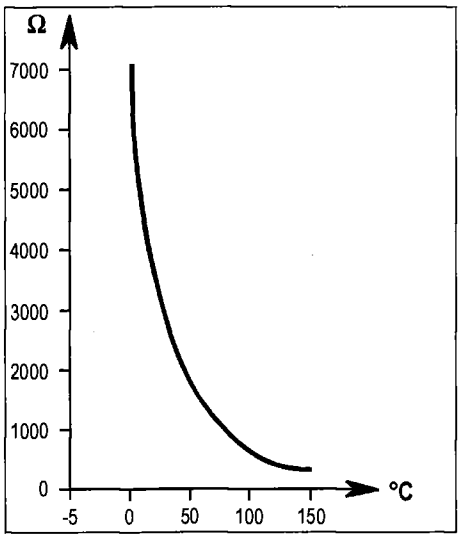

P4F29AB01

GEARBOX OIL TEMPERATURE SENSOR

The sensor is located in the gearbox casing and detects the transmission oil temperature through the variation in NTC resistance on the sensitive part of the sensor.
The information provided by the control module is used to increase the line pressure when cold in order to reduce the gear change times.
The resistance of the gearbox oil temperature sensor can be measured by disconnecting the connector and connecting an ohmmeter as shown in the figure.

Wiring diagram

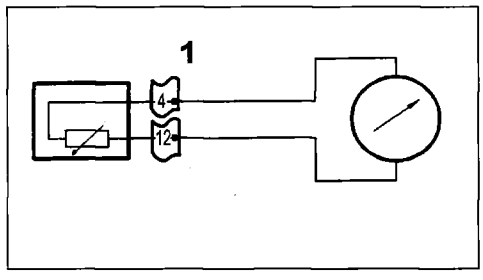

P4F29AB04

Resistance: 6445 ± 645 ohm at 10°C
247 ± 16 ohm at 110°C
111 ± 6 ohm at 145°C

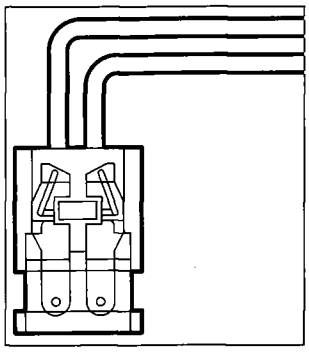
P4F29AB02

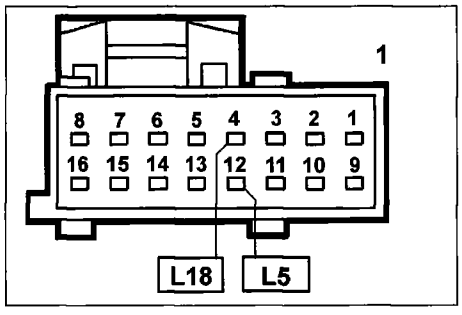

P4F29AB03

Gearbox sensors/actuators connector (view of contact side)

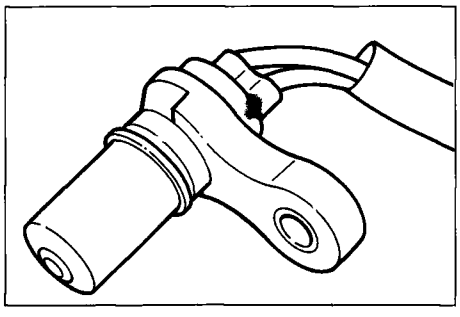
P4F29AB05

MAIN SHAFT RPM AND VEHICLE SPEED SENSOR

The two magnetic induction sensors located on the gearbox casing allow the control module to check the correct operation of the gearbox with regard to transmission ratios and gear change times, and to conduct diagnoses on the operation of the sensors.
The main shaft rpm sensor detects the speed of rotation of the gearbox main shaft, connected to the torque converter turbine, via a 20-tooth phonic wheel on the outer surface of the clutch C1.
The sensor sends to the control module a pulse signal (20 pulses per shaft revolution) proportional to the input speed of rotation of the gearbox.
The vehicle speed sensor detects the speed of rotation of the gearbox layshaft, connected to the differential pinion, by means of a 12-tooth phonic wheel constituted by the parking lock gear.
The sensor sends the control module a pulse signal (12 pulses per shaft revolution) proportional to the output speed of rotation of the gearbox, i.e. to the vehicle speed. This signal is used to effect the gear changes.

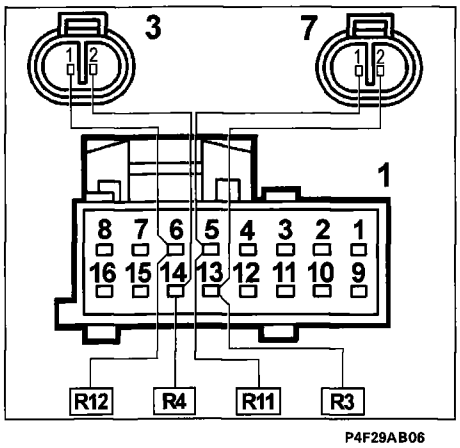

P4F29AB06

Gearbox sensors/actuators connector (view of contact side)

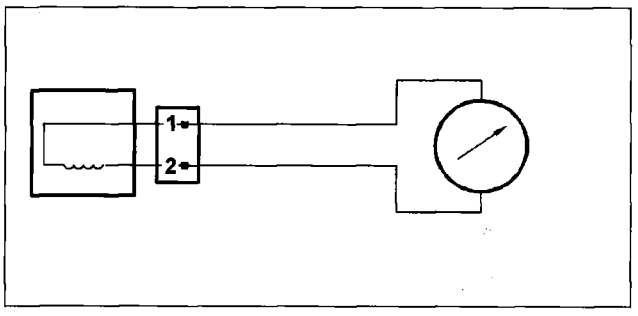

P4F30AB01

The resistance of the main shaft rpm and vehicle speed sensors can be measured by disconnecting the connectors and connecting an ohmmeter as shown in the figure.

Resistance of main shaft rpm sensor: 430 ± 43 ohm at 20°C
Resistance of vehicle speed sensor: 720 ± 72 ohm at 20°C.

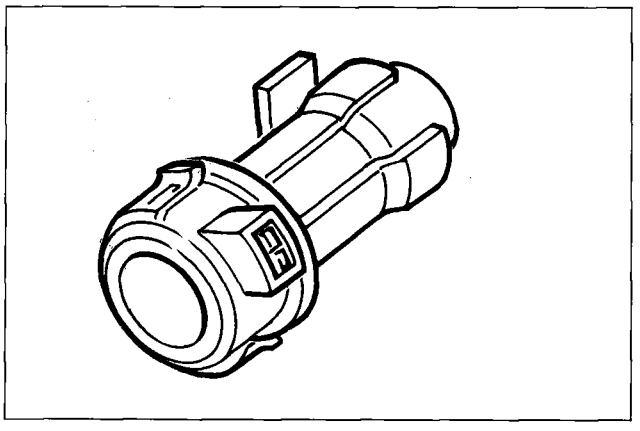

P4F30AB02

KICK-DOWN SWITCH

The kick-down switch is installed on the accelerator pedal and is operated when the accelerator pedal is pressed beyond a certain travel.
When the switch is operated, the control module (terminal R6) scales the transmission ratio in accordance with the vehicle speed, adhering to the selected gear change program.
With the switch at the ON position, the control unit effects the gear changes at higher engine speeds.

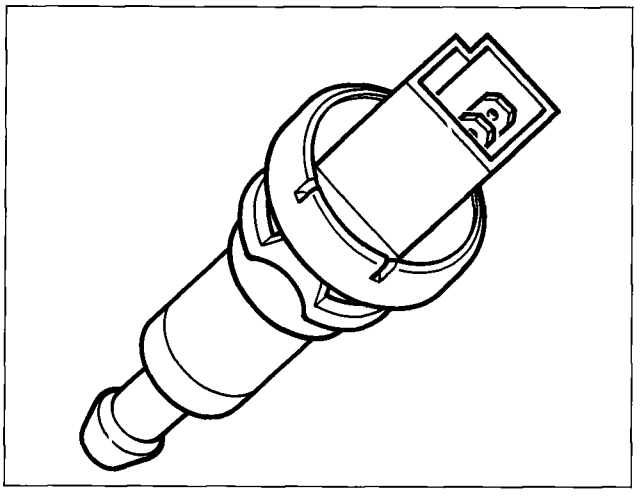

P4F30AB03

STOP LIGHTS SWITCH

The switch, mounted on the pedal assembly, is closed when the brake pedal is pressed, causing the STOP lights to come on and supplying the L9 terminal of the control module to exclude the torque converter lock-up function when the brake pedal is pressed.

THROTTLE VALVE POSITION SIGNAL

The throttle valve position signal is acquired by the fuel injection/ignition control unit, which detects it via the potentiometer installed on the throttle body.
The automatic transmission control unit uses this signal (PWM type with variable duty cycle), receiving it directly from the fuel injection/ignition control unit.

ENGINE COOLANT TEMPERATURE SIGNAL

The engine coolant temperature signal is received by the fuel injection-ignition control unit, which detects it via an NTC sensor located on the thermostat body.
The automatic transmission control unit uses an ON/OFF type signal generated by the fuel injection/ignition control unit; the signal is changed over at a coolant temperature of 75°C.

WIRING DIAGRAM

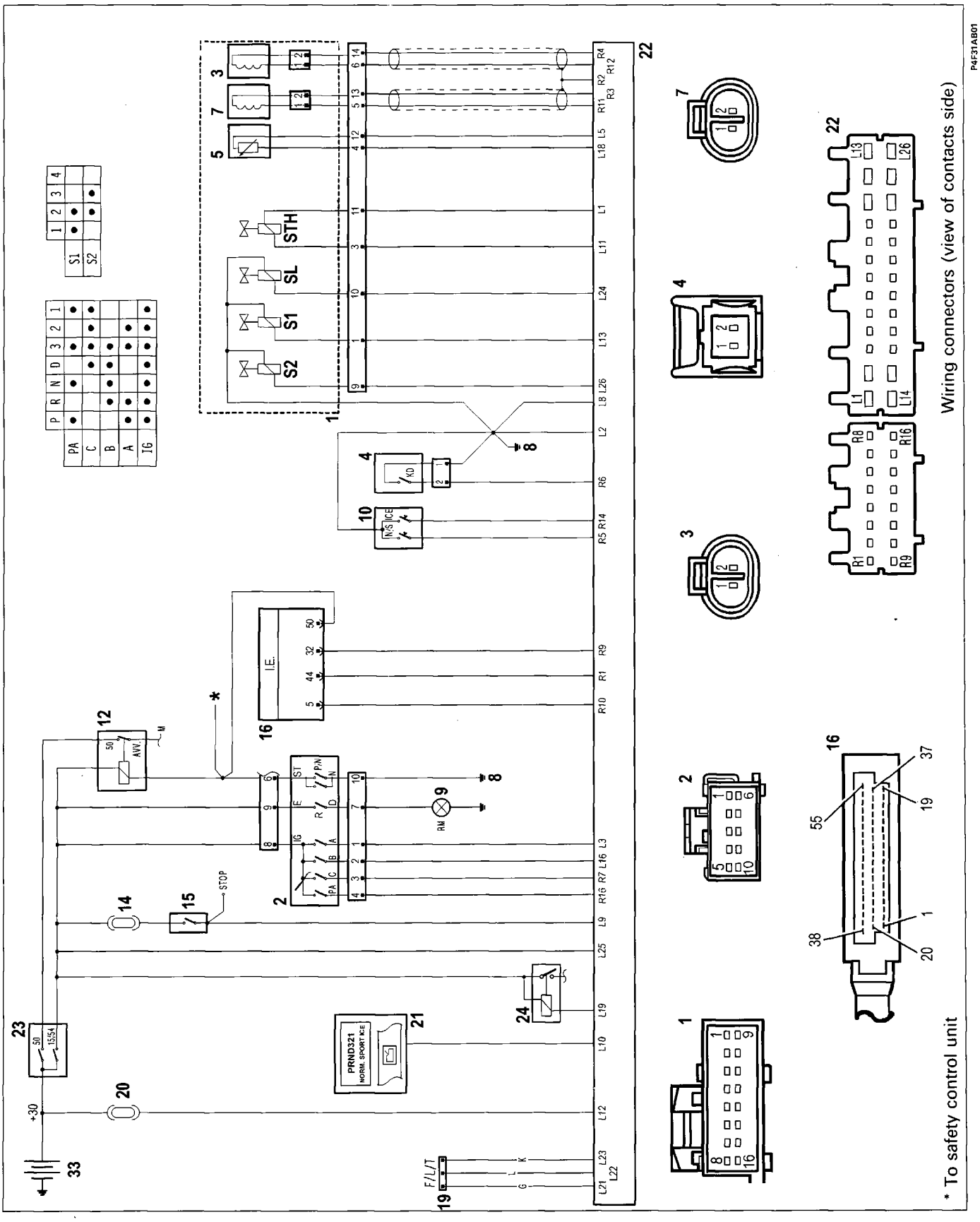

21-27.

DIAGNOSIS

Operating problems in the AISIN electronic automatic transmission may be caused by the engine, control system or automatic transmission itself.

The fault-finding procedure begins with very simple operations, carried out in order of difficulty, initially aimed at establishing whether the fault depends on the engine, control system or gearbox.

Electrical faults are revealed by the self-test funcction of the control module, by the flashing of the red light on the instrument panel.

Preliminary tests

Checking oil level

NOTE *The gearbox oil level must be checked with the engine and gearbox at normal operating temperatures (gearbox oil: 70 - 80°C), so the vehicle must be driven for a suitable period of time before the check.*

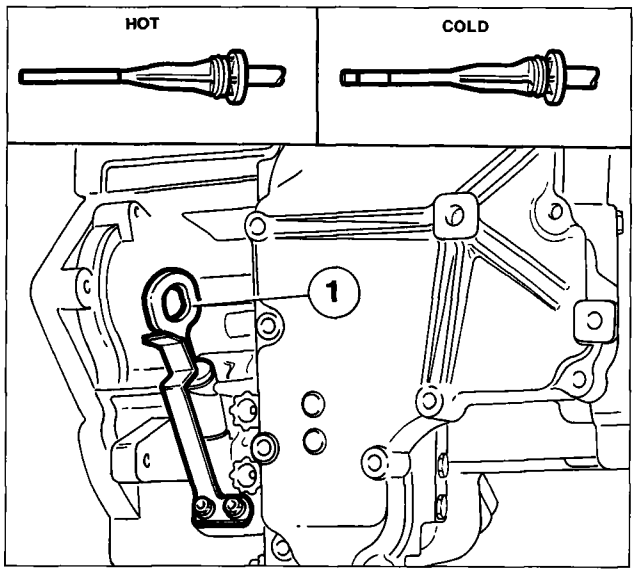

P4F32AB01

To check the level of the gearbox oil, proceed as follows:

- park the vehicle on flat ground and apply the handbrake;
- with the engine idling, gently move the selector lever from position P to position 1, then return it to P;
- withdraw the dipstick (1) and clean it;
- insert the dipstick fully into its seating;
- withdraw the dipstick again and check that the oil level lines up with the notch on the side of the stick marked HOT.

If the oil level is low, identify and eliminate the leaks, then top up the level.
Also check the condition of the oil; if it is black or smells burnt, it should be changed.

Checking selector lever position

When the selector lever is moved from position N to the other positions, check that it moves freely without stiffness into any position, and that the position indicator on the instrument panel indicates the correct position.

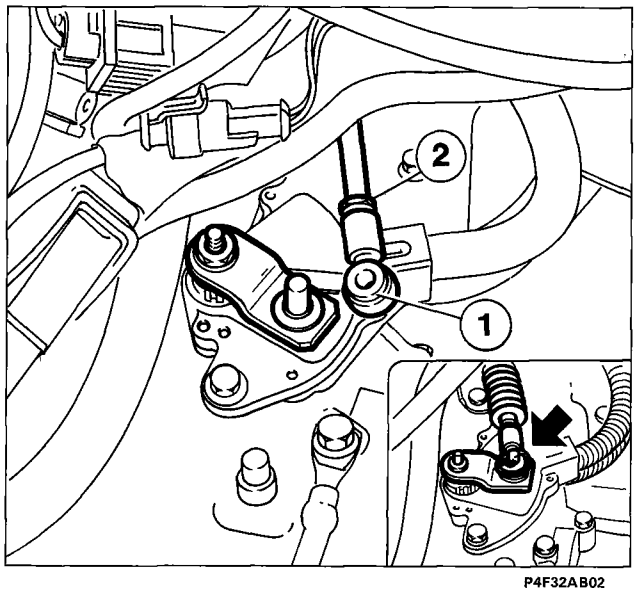

P4F32AB02

Checking selector lever position

If the engine does not start when the selector lever is at position N or P, or vice versa it starts when the lever is in a position other than N or P, the selector lever control cable must be adjusted as described on page 45, by adjusting the head (1) and locking it with the locknut (2). Finally check the correct position of the selector lever position sensor as described on page 47.

Checking idle speed
Check that the idle speed is correct.

Tests with FIAT/LANCIA Tester

Guided fault finding on the electrical part can be conducted by connecting the FIAT/LANCIA Tester with M39-A memory to the control module's diagnostic socket.
Full diagnosis of the systems consists of three stages:
1. display of a set of operating parameters (with the engine running);
2. display of error and elimination of the causes (guided diagnosis);
3. activation of the actuators (active diagnosis).

1. Display of operating parameters
The following operating parameters are displayed:
- selector lever position;
- gear engaged;
- vehicle speed;
- throttle valve angle of aperture;
- pressure control solenoid STH;
- kick-down switch,
- brake pedal contact;
- engine coolant temperature;
- gearbox oil temperature;
- gearbox main shaft rpm;
- driving torque reduction function;
- battery voltage.

2. Display of errors and elimination of causes (guided diagnosis)
At the beginning of diagnosis, the F/L Tester reads the errors memorized by the control module.
When an error is detected, the F/L Tester emits an acoustic signal and displays a message relating to the error.
A list of the possible causes of the error is then displayed.

After all the necessary repairs or replacements have been carried out and all the faults eliminated, the errors will be automatically deleted by the F/L Tester.

Guided diagnosis can also be carried out by checking step by step the efficiency of the circuits and operation of the various sensors/switches.

Once the faults have been eliminated, a road test should be carried out with the engine and gearbox up to temperature for at least 10 minutes, and then the F/L Tester should be used to check that there are no faults in the system.

3. Activation of actuators (active diagnosis)
The following actuators can be activated by a command sent from the F/L Tester, with the engine off and the selector lever at position N;
- gear change solenoids S1 and S2;
- lock-up clutch control solenoid SL;
- line pressure control solenoid STH.

This test is useful for checking the operation of the actuators, as the clicking caused by the internal movements of the solenoids can be heard.

Errors memorized by the control module can also be deleted under active diagnosis (provided they are no longer present or the conditions are not recreated).

NOTE *Errors can also be deleted by disconnecting the battery for over 10 seconds.*

Copyright Fiat Auto

Stall speed test

This test serves to check the performance of the transmission and engine, and is conducted by measuring the maximum rpm that can be reached by the engine with the selector lever at position D and R.

The duration of the stall speed test must not exceed 5 seconds.

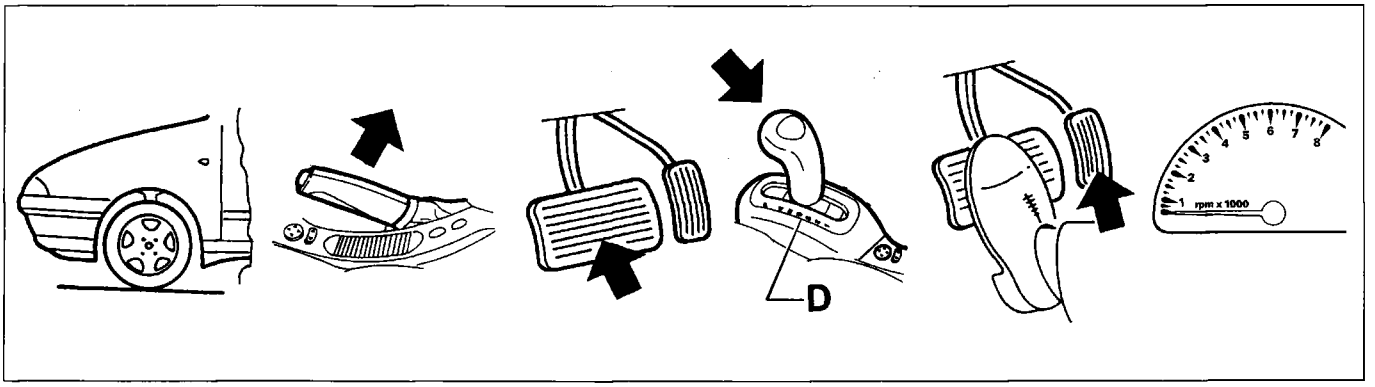

P4F34AB01

To conduct the stall speed test, proceed as follows:
- chock the vehicle by placing wedges under the wheels;
- apply the handbrake fully;
- start the engine and bring it up to temperature;
- pres the brake pedal down hard with the left foot;
- move the selector lever to position D;
- press the accelerator pedal down fully with the right foot and quickly read the maximum speed reached by the engine.

Stall speed: 2300 ± 150 rpm

Repeat the sequence of operations, but moving the selector lever to position R.

Stall speed: 2300 ± 150 rpm

Stall speed	Possible causes
Lower than specified value in both D and R	* Insufficient engine power * Incorrect operation of free wheel on stator of torque converter
Higher than specified value in D	* Insufficient line pressure * Clutch C1 and C3 slipping * Incorrect operation of free wheel F1
Higher than specified value in R	* Insufficient line pressure * Clutch C2 slipping * Clutch C3 slipping * Brake B2 slipping
Higher than specified value in both D and R	* Insufficient line pressure * Clutch C3 slipping

Gear engagement time test

This test is for checking the condition of clutches C2 and C3 and the brake B2, and is conducted by measuring the time taken to engage first gear or reverse gear.

To obtain a reliable result, carry out several measurements and take the average value. Allow one minute to pass between two consecutive measurements.

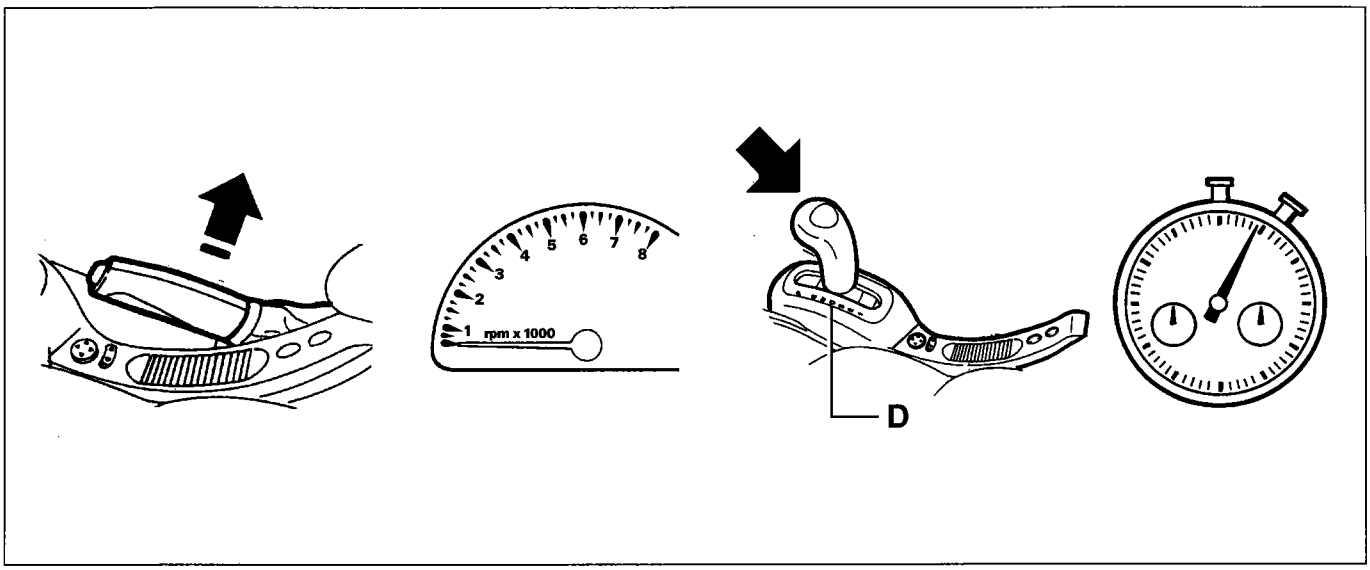

P4F35AB01

To measure the gear engagement time, proceed as follows:
- apply the handbrake fully;
- start the engine, warm it up to temperature and check that the idle speed is correct;
- move the selector lever from position N to D;
- using a chronometer, measure the time elapsing between the movement of the selector lever and perception of engagement of 1st gear.

N-D engagement time: less than 0.7 s

Repeat the sequence of operations, except move the selector lever from position N to R.

N-R engagement time: less than 1.2 s

Engagement time	Possible causes
Higher than specified value from N to D	* Insufficient line pressure * Clutches C1 and C3 slipping * Incorrect operation of free wheel F1
Higher than specified value from N to R	* Insufficient line pressure * Clutch C2 slipping * Clutch C3 slipping * Brake B2 slipping

Copyright Fiat Auto

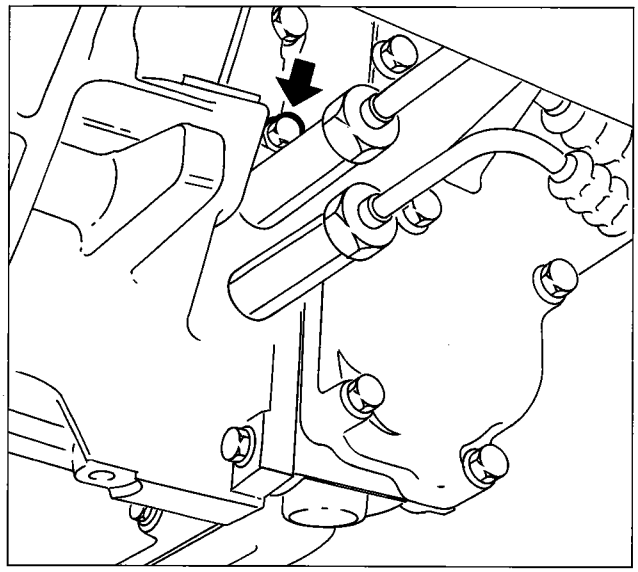

P4F36AB01

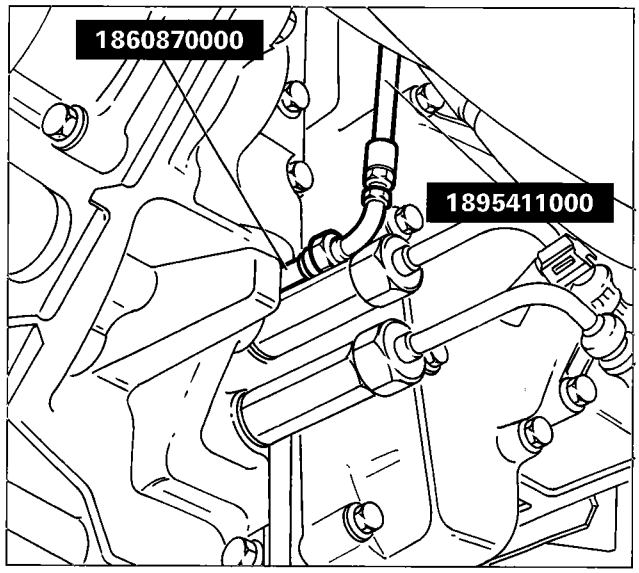

P4F36AB03

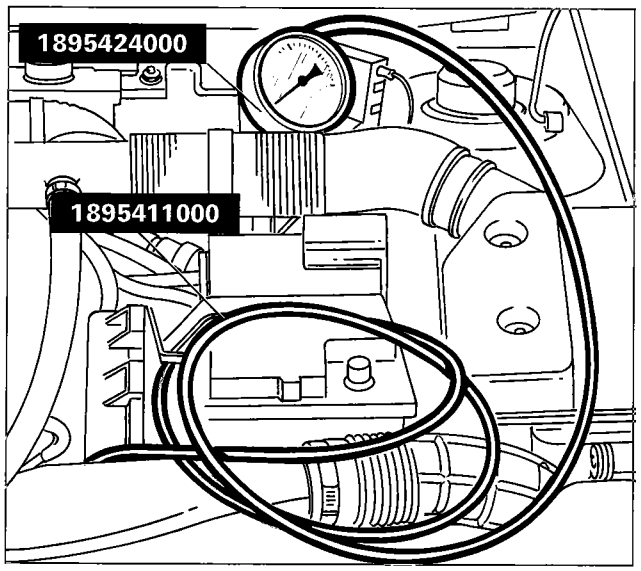

P4F36AB04

Hydraulic test

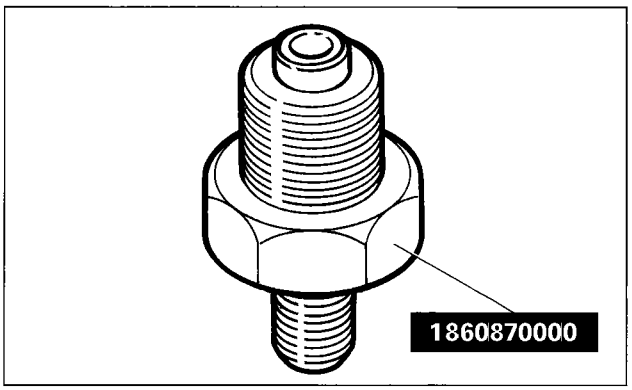

P4A36AB02

To measure the line pressure, proceed as follows:

- place the car on ramps, then working from under the vehicle remove the gearbox oil screw plug and screw in its place the connector 1860870000;
- pass the pipe 1895411000 from the top of the engine compartment so as to connect one end of the pipe to the connector 1860870000, and connect the other end to the pressure gauge 1895424000. Position it so that it is visible from the driver's seat;

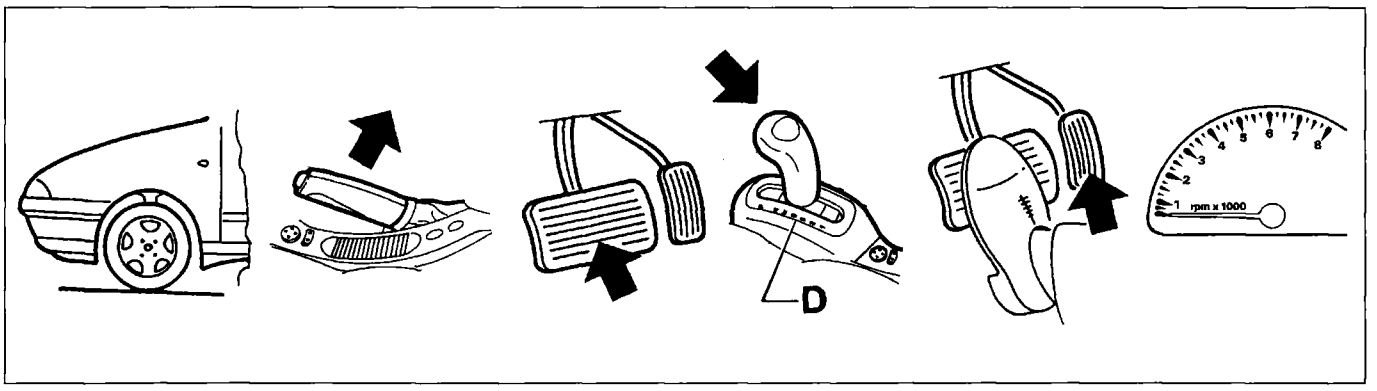

P4F34AB01

- chock the vehicle by placing wedges under the wheels;
- apply the handbrake fully;
- press the brake pedal down hard with the left foot;
- start the engine, warm it up to temperature and check that the idle speed is correct;
- move the selector lever to position D;
- read the measurement of the line pressure during idling;
- fully press the accelerator pedal with the right foot and quickly read the line pressure at the engine's stall speed.

The stall speed test must not exceed 5 seconds in duration.

Repeat the last two operations wth the selector lever on position R.

Speed	Position D (and 1-2-3)	Position R (and N-P)
Idling	3.7 - 4.3 bar 3.8 - 4.4 kg/cm²	5.4 - 6.3 bar 5.5 - 6.4 kg/cm²
Stall	10.8 - 12.5 bar 11.0 - 12.8 kg/cm²	14.1 - 16.9 bar 14.4 - 17.2 kg/cm²

Line pressure	Possible causes
Higher than specified value in both D and R	Fault in pressure control solenoid Regulating valves faulty
Lower than specified value in both D and R	Fault in pressure control solenoid Regulating valves faulty Oil pump faulty
Lower than specified value only in D	Leaks in hydraulic circuit in forward gears
Lower than specified value only in R	Leaks in hydraulic circuit in reverse and neutral

Copyright Fiat Auto

Road tests

These tests are for checking that the automatic transmission is working correctly under actual conditions of use.

Carry out the following tests with the gearbox oil at normal operating temperature.

Test in position D with NORMAL or SPORT driving mode
Move the selector lever to position D and carry out the following tests with the accelerator pedal in two fixed positions, corresponding to 50% and 100% of the throttle valve aperture.

A) Changes to higher gears
Make sure that the gear changes 1-2, 2-3 and 3-4 occur at the correct points of the gear change program (see diagrams on pages 20, 21 and 22).

B) Jolts and slipping
In the same way, check that the jolts and slipping caused by the gear changes 1-2, 2-3 and 3-4 are normal.

C) Locking lock-up clutch
At a speed of about 85 km/h, gently press the accelerator pedal and check that the engine rpm does not change suddenly.

D) Vibrations and noises
Check under normal driving conditions that there are no vibrations or unusual noises.

E) Kick-down operation
Proceeding in second, third and fourth gears, with the selector lever on position D, fully press the accelerator pedal to close the kick-down switch and check that the limit speeds for the changes 2-1, 3-2 and 4-3 conform to the gear change program.

F) Engine brake
Driving in fourth gear, move the selector lever sequentially from position D to positions 3, 2 and 1 and perceive the engine braking effect at each of these gear changes.

Tests in position 3, 2 and 1 with NORMAL or SPORT driving mode
The above tests are repeated for each selector lever position.

Test in position R
Move the lever to position R, fully press the accelerator pedal to start the vehicle, checking that the slipping is normal.

Test in position P
Stop the vehicle on a downhill slope, and after moving the lever to position P, release the brake pedal. Check that the locking pawl prevents the vehicle from moving.

Test with manual operation of the gearbox

Disconnect the control module connectors. Test the vehicle on the road, making sure that whenever the selector lever is moved, the gear changes take place in accordance wiht the table below.

Selector lever position	P	R	N	D	3	2	1
Gear engaged	Park	Reverse	Neutral	4th	4th	3rd	1st

NOTE *With the selector lever at position N, the vehicle must not move spontaneously on a flat road. With the selector lever at position P, the locking pawl must stop the vehicle moving even on a downhill road.*

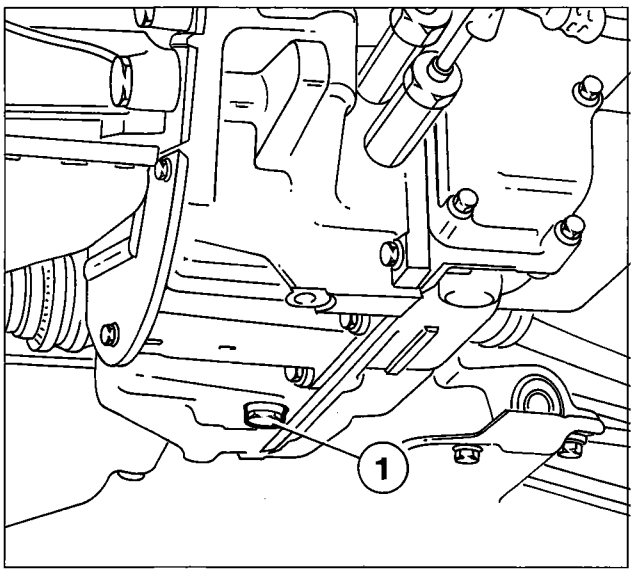

P4F39AB01

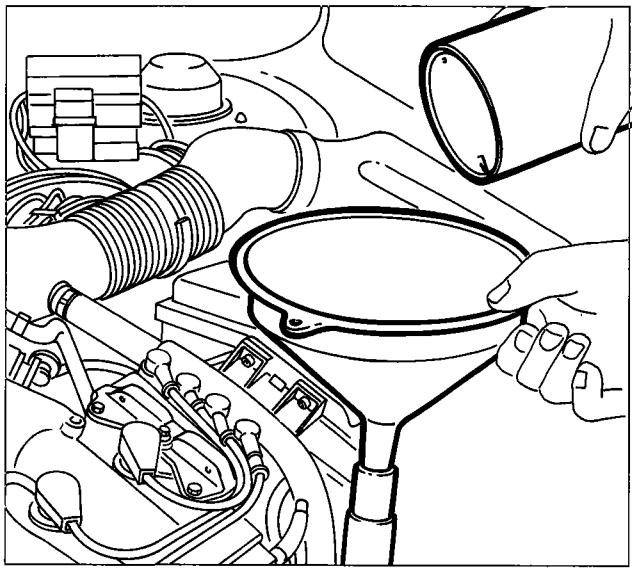

P4F39AB02

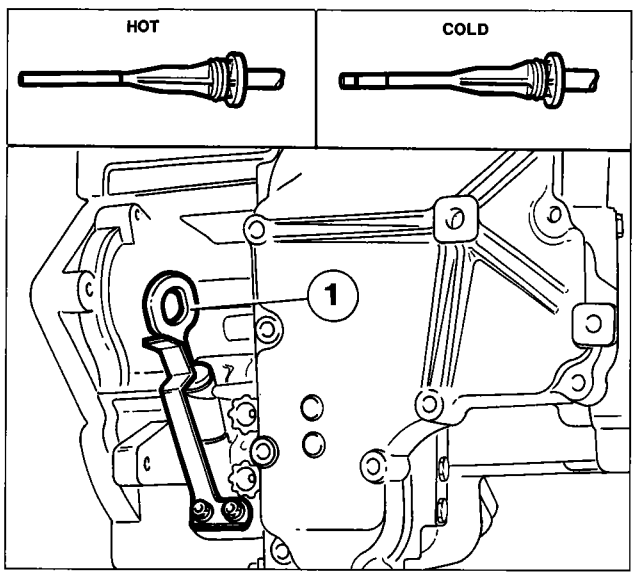

P4F32AB01

CHANGING GEARBOX OIL

Draining

Drain the gearbox oil after a road journey so that the oil reaches operating temperature. Then carry out the following operations:

- undo the plug (1) and allow the oil to drain;
- retighten the plug (1) after replacing the seal, and tighten it to a torque of between 2.35-5.49 daNm.

Filling

Withdraw the dipstick and, using a clean funnel so as not to contaminate the oil, pour in the required quantity of gearbox oil. To facilitate the operation, remove the air cleaner. After filling, check that there are no leaks from the drain plug.

Periodical oil change: 3 litres- 2.7 kg
Recommended gearbox oil: TUTELA GI/2

CHECKING OIL LEVEL

NOTE *The gearbox oil level must be checked with the engine and gearbox at normal operating temperature (gearbox oil temperature: 70 - 80°C), so the vehicle must be driven for an appropriate period of time before the check.*

To check the gearbox oil level, proceed as follows:

- park the vehicle on flat ground and apply the handbrake;
- with the engine idling, gently move the selector lever from position P to position 1, then return it to P;
- withdraw the dipstick (1) and clean it;
- insert the stick fully into its seating;
- again withdraw the dipstick and check that the oil level lines up with the notch on the side of the stick marked HOT.

If the oil level is low, identify and eliminate any leaks, then add oil to top up the level.

If the check has to be conducted at a low oil temperature, check that the oil level is within the notch on the side of the dipstick marked COLD. If possible, recheck the oil level at the correct temperature (70 - 80 °C).

21-27.

Also check the condition of the oil, and in particular that there is no white contamination caused by contact with the coolant from the oil cooling circuit, and that there are no metal particles due to wear of internal components or a burnt smell.

WARNINGS

- If the oil level is low, there may be a reduction in the line pressure owing to the fact that the oil pump draws in air, resulting in malfunctioning of the transmission.
- If the oil level is higher than normal, there may be oil leaks from the vent pipe.
- Contamination of the oil with water or the use of an oil with different characteristics from the recommended oil causes higher consumption and malfunction of the transmission.

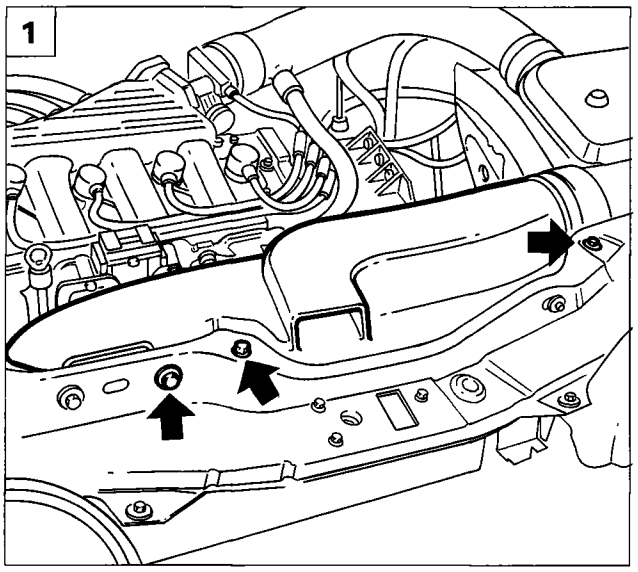

P4F40AB01

GEAR CHANGE CABLE

Removing

Disconnect the battery's negative cable, then proceed as described below:

1. Remove the air intake duct by undoing the bolts shown in the figure, which secure it to the front cross panel.
2. Lift the cover protecting the battery positive pole and disconnect the cable; undo the nut securing the battery to the cage, then remove the battery from the engine compartment.
3. Remove the cover from the relay and fuse box by undoing the screw indicated.

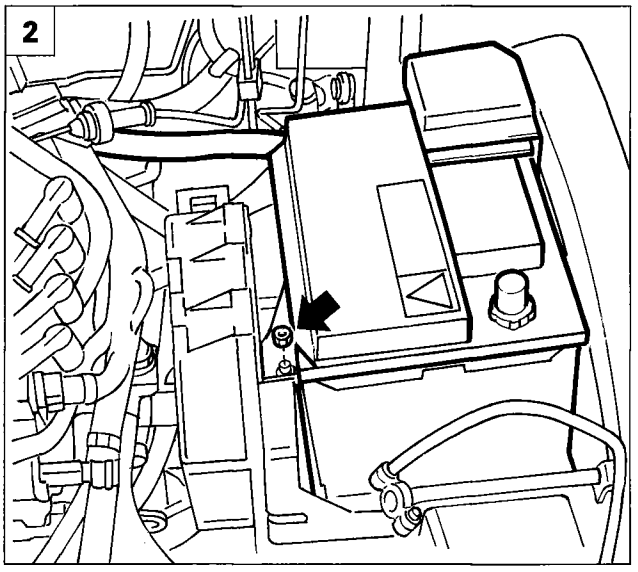

P4F40AB02

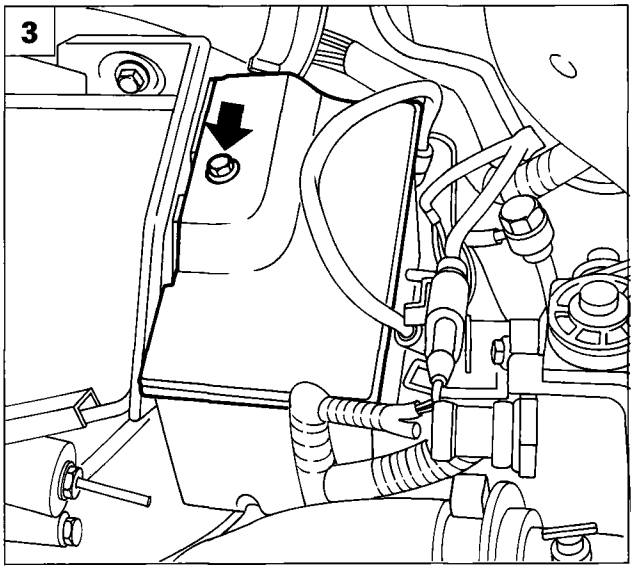

P4F40AB03

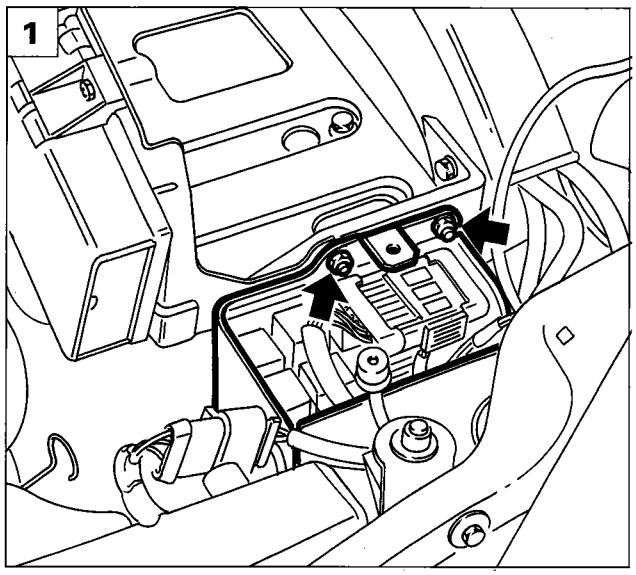

P4F41AB01

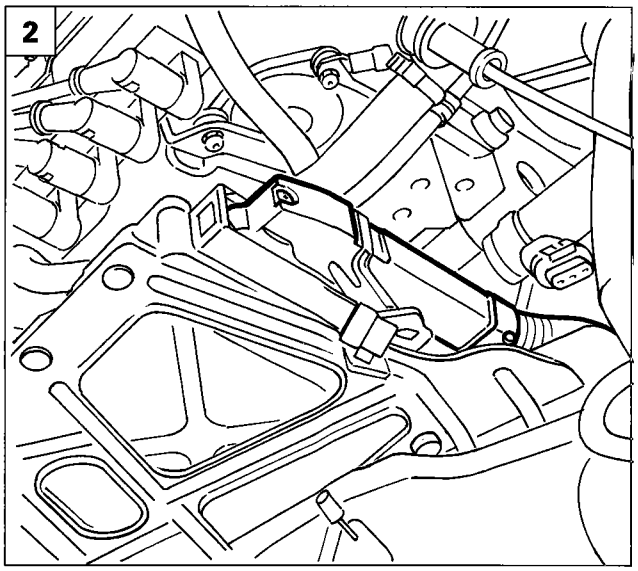

P4F41AB02

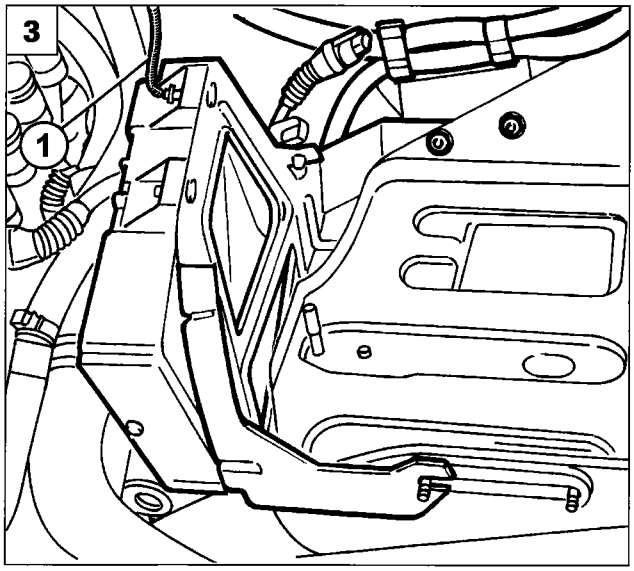

P4F41AB03

1. Remove the nuts securing the relay and fuse box to the battery cage, then move the box over to one side.
2. Disconnect the i.e. control unit supply connector.
3. Disconnect the earth cable (1), remove the nuts securing the i.e. control unit mounting bracket, then remove the control unit from the engine compartment. The nuts indicated also secure the starter motor supply wiring and the front cable/fuel injection cable connection.
4. Remove the bolts (1) and slacken the bolt (2) securing the battery cage to the body shell. Before removing the cage, disconnect the cable clip underneath.
5. Remove the split pin and washer shown in the figure; lift the gear change cable head so as to disconnect it from the gear change lever position sensor.

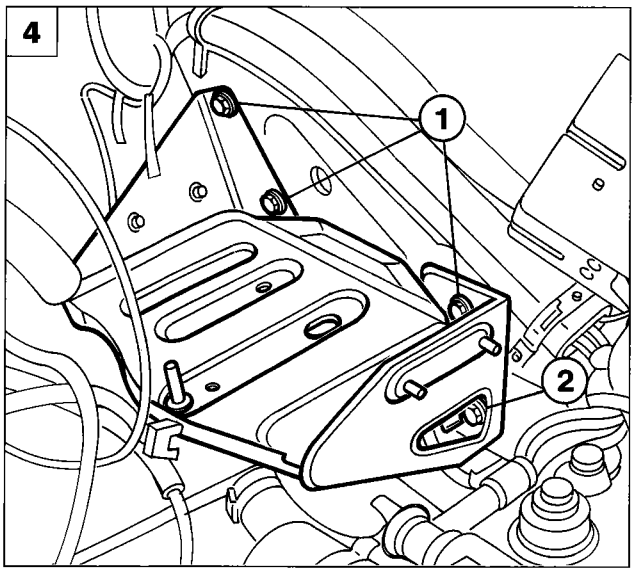

P4F41AB04

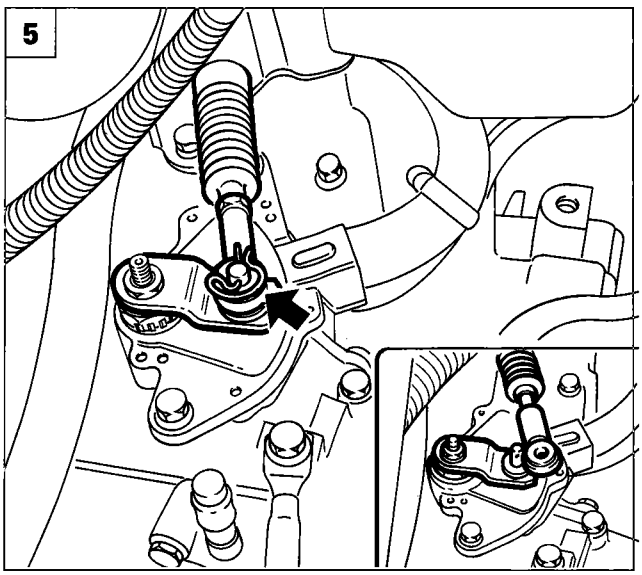

P4F41AB05

21-27.

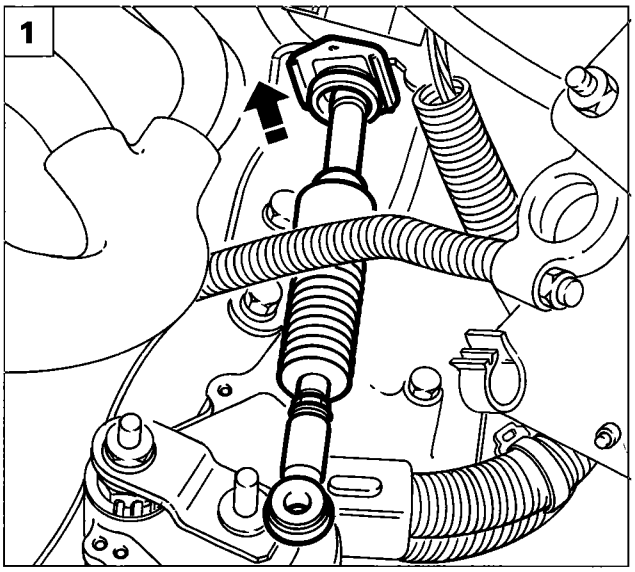

P4F42AB01

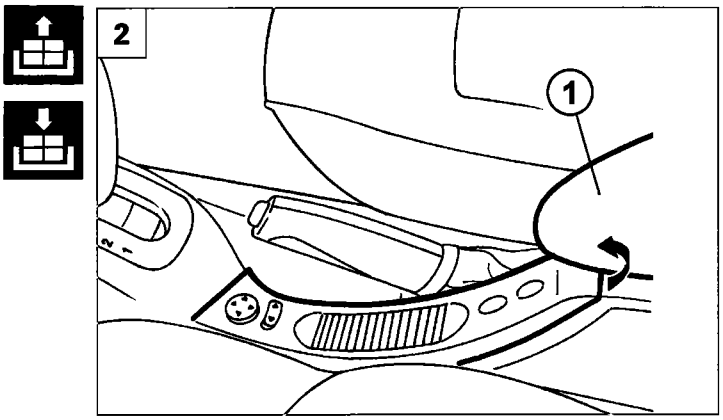

P4F42AB02

1. Lift the gearbox control cable retaining bracket to release it from the mounting bracket.

2. Lift the armrest (1) then disengage the driving mode switch panel, disconnect the electrical wiring and withdraw the panel.

3. Position the selector lever on P, remove the retaining bolt on the front of the selector lever handle and then withdraw the handle upwards, then remove the selector lever position indicator panel.

4. Remove the trim from the handbrake lever; slacken the tension from the relevant cable and disconnect the wiring connector for the handbrake "on" indicator.

Place the car on ramps and carry out the following operations from under the car:

5. Remove the heat shield indicated.
6. Disconnect the cables operating the handbrake from the mounting and release them from the bracket.

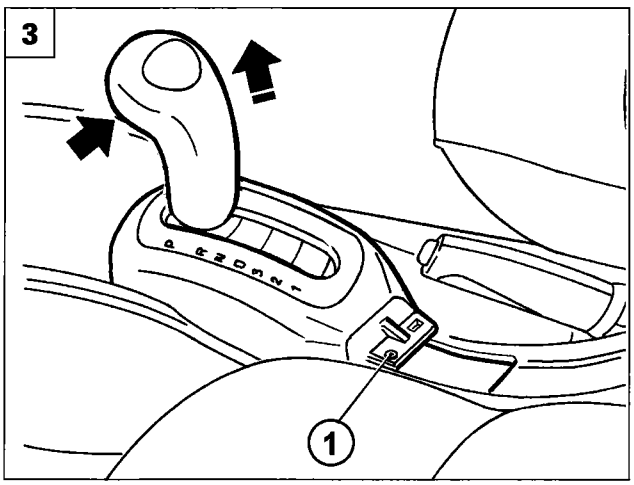

P4F42AB03

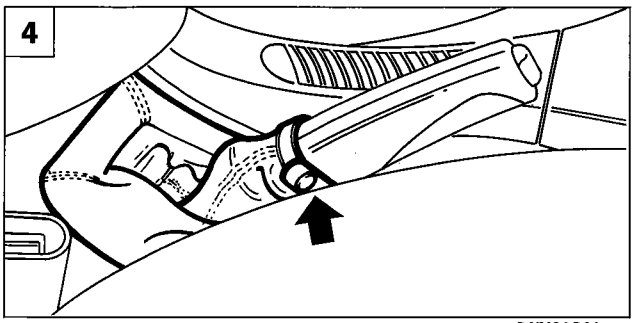

P4F42AB04

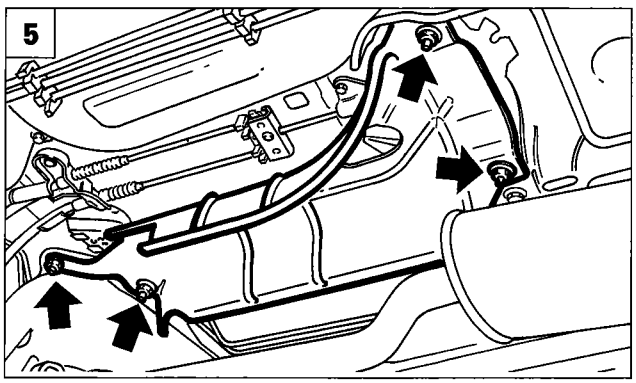

P4F42AB05

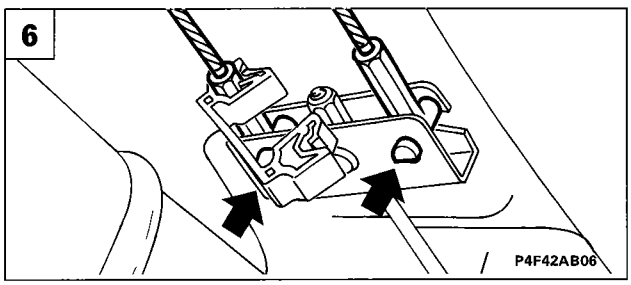

P4F42AB06

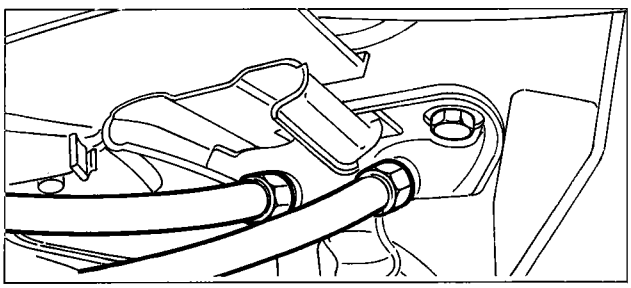

P4F42AB07

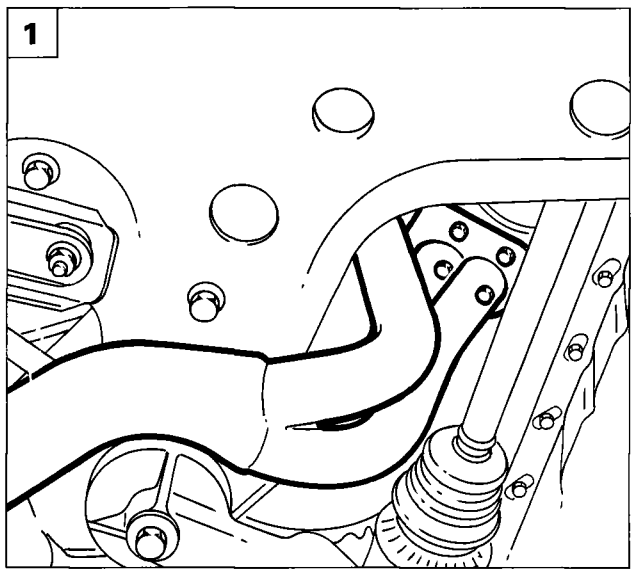

P4F43AB01

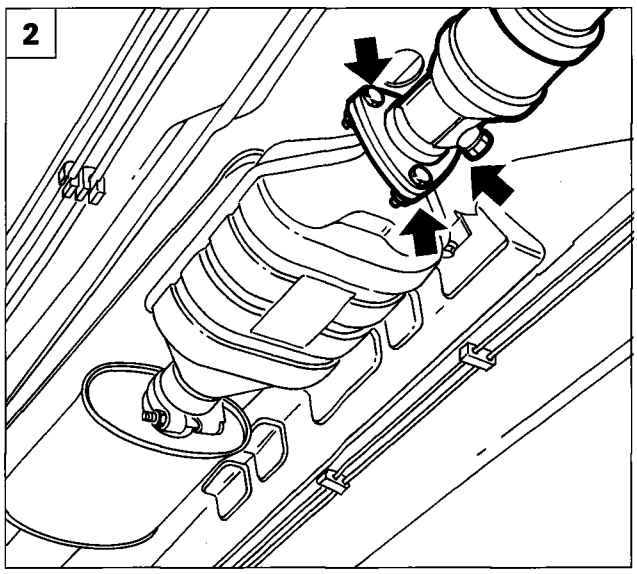

P4F43AB02

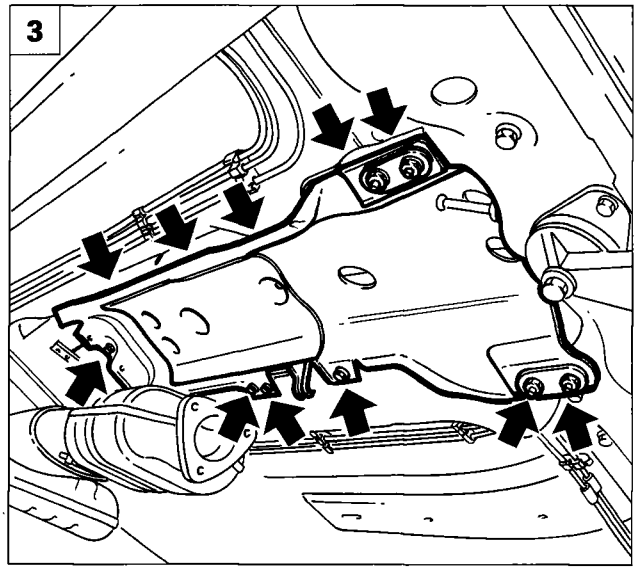

P4F43AB03

1. Disconnect the Lambda probe wiring connector, then disconnect the first section of the exhaust pipe from the exhaust manifold, after removing the heat shield and mounting bracket on the engine block.
2. Remove the first section of the exhaust pipe by undoing the attachments to the catalytic converter.
3. Undo the bolts securing the gear change internal linkage mounting and handbrake to the body shell.
4. Withdraw the internal gear change linkage mounting downwards.
5. Internal linkage assembly.

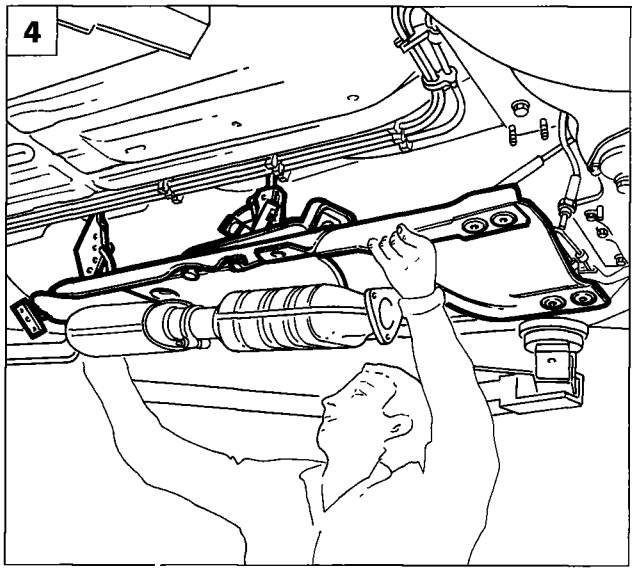

P4F43AB04

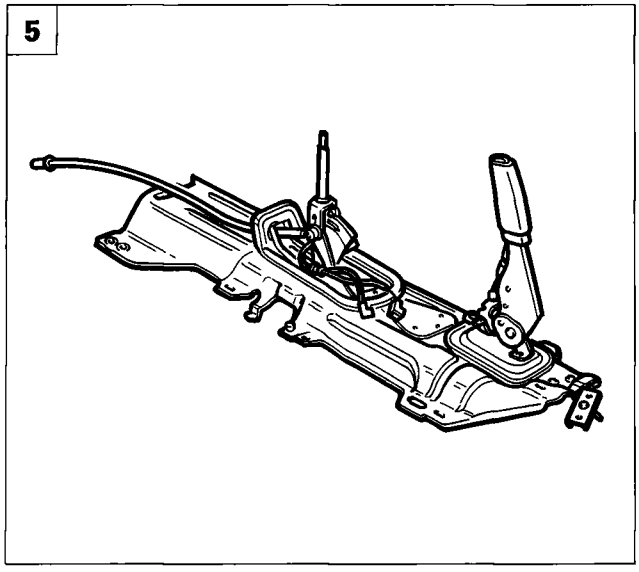

P4F43AB05

21-27.

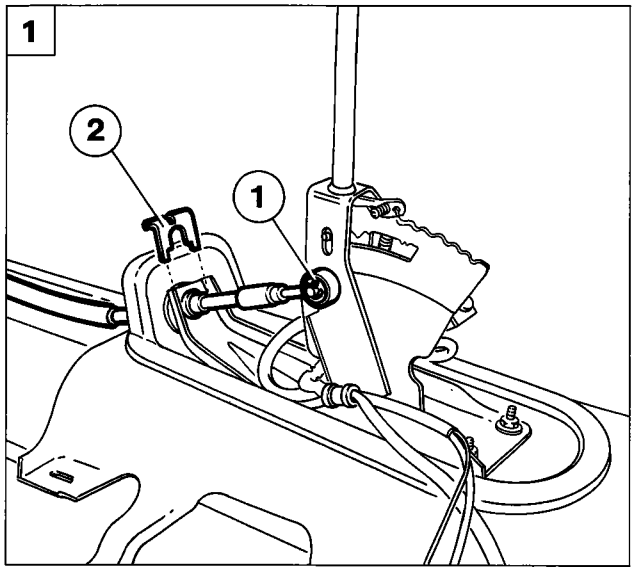

P4F44AB01

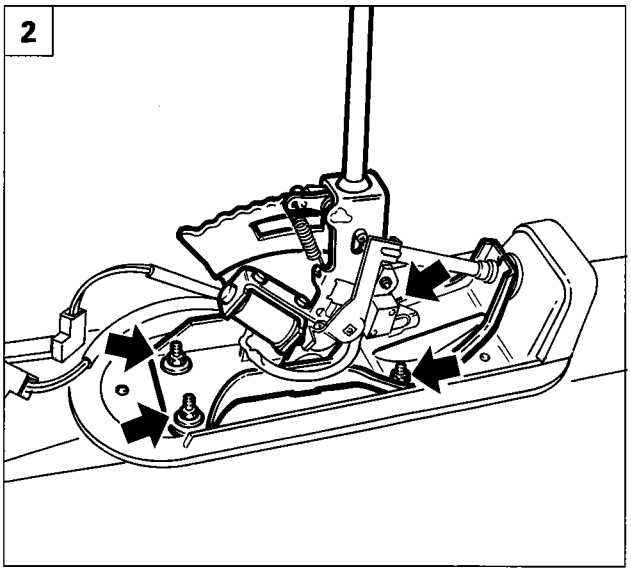

P4F44AB02

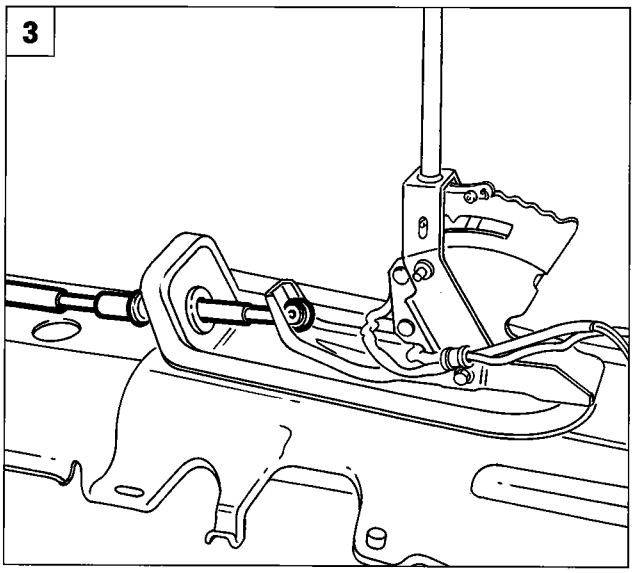

P4F44AB03

1. Remove the split pin (1) and bracket (2) securing the gear change cable to the selector lever.
2. Undo the nuts securing the selector lever mounting and remove the mounting.
3. Disconnect the gear change cable from the selector lever mounting; then replace the cable.

Dismantling selector lever

4. Undo the bolt securing the clip retaining the supply cables to the shift-lock device and additional PARK position switch.

5. Undo the nuts securing the additional PARK position switch (1); if the shift-lock device (2) has to be worked on, undo the bolts shown in the figure.

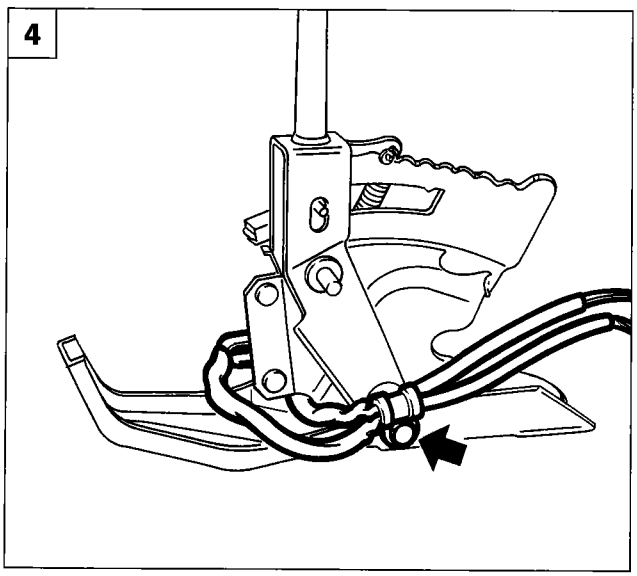

P4F44AB04

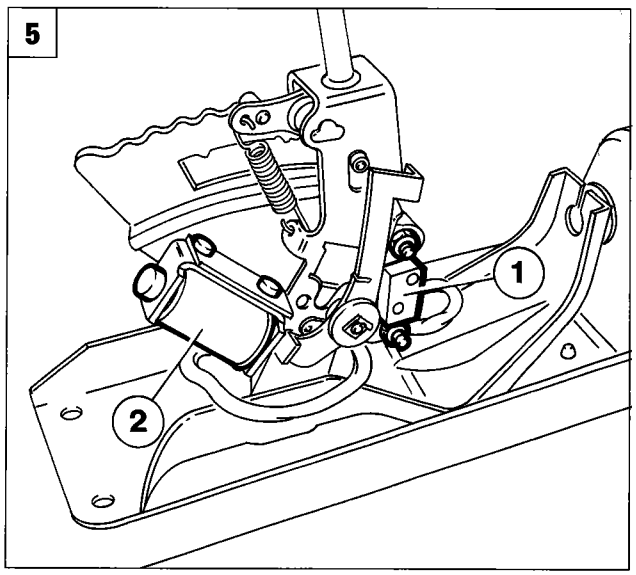

P4F44AB05

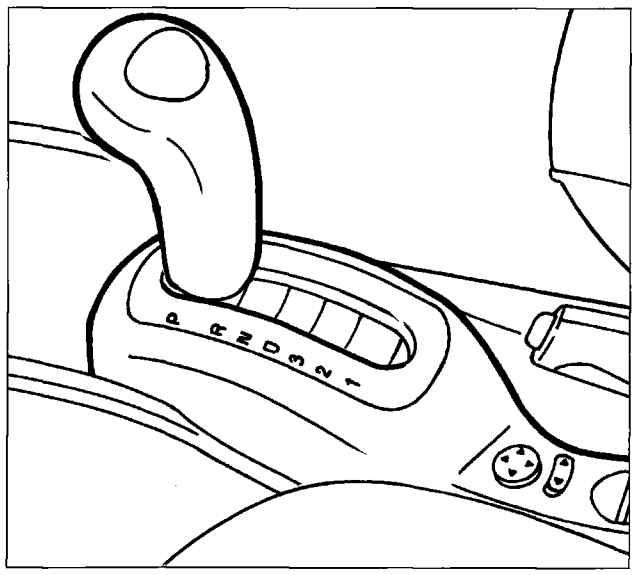

P4F45AB01

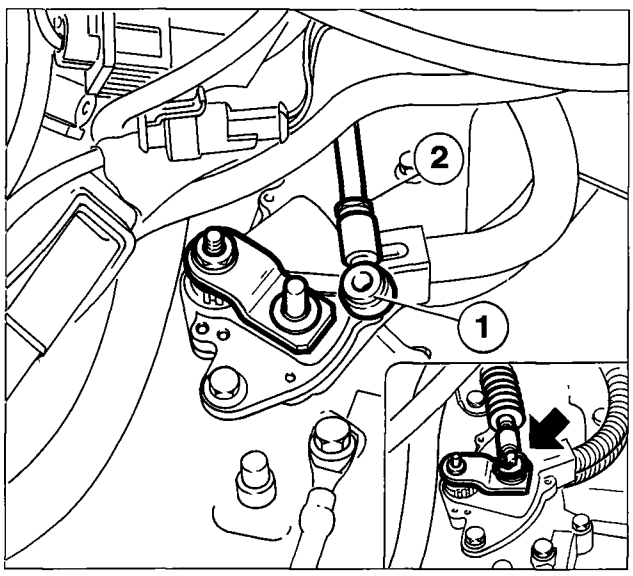

P4F32AB02

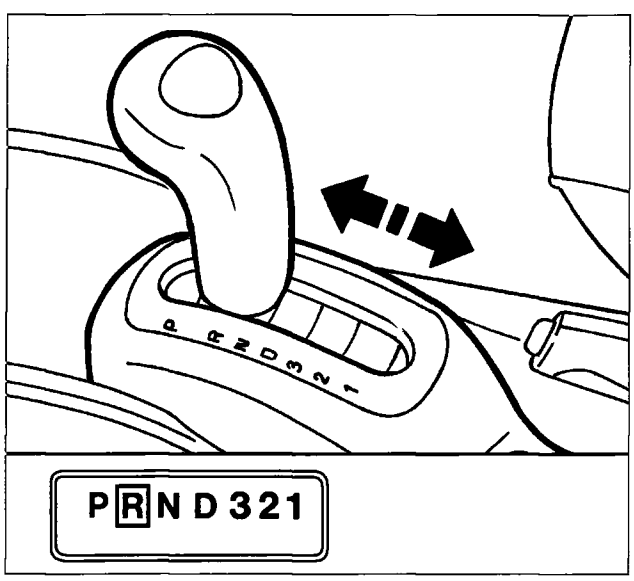

P4F45AB02

Refitting

Refit the gear change cable and selector lever by reversing the procedure for removal, bearing in mind the following:

- check that the gear change lever is positioned at P (lever fully forward);
- check that the selector lever is also set to position P;

- fit the gear change cable head (1) to the lever located on the gearbox. If the cable length needs to be adjusted, adjust the head (1) by screwing it or unscrewing it on the threaded part of the cable, then lock it with the nut (2). Finally fit the washer and split pin;

- operate the selector lever and check that, at each position, you can hear the gear change lever clicking into position.

Complete the assembly by securing the battery cage, i.e. control unit, battery and air intake duct.

Finally carry out the following checks:

- the engine must only start with the selector lever in position P or N;

- each position of the selector lever must be accompanied by the relevant indications on the indicator panel and instrument panel display.

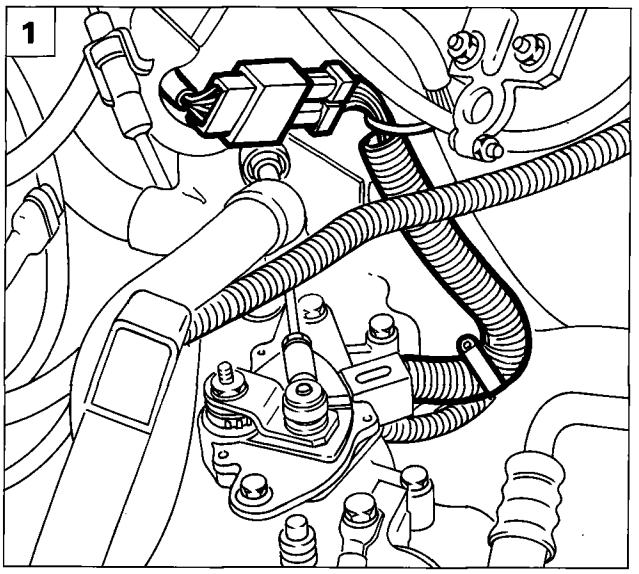

P4F46AB01

GEAR CHANGE LEVER POSITION SENSOR

Removing

Remove the air intake duct, battery, relay and fuse box (move it to one side) the i.e. control unit and battery cage, as described for the removal of the gear change cable, position the selector lever at P, then carry out the following operations:

1. Disconnect the wiring connector from the gear change lever position sensor.

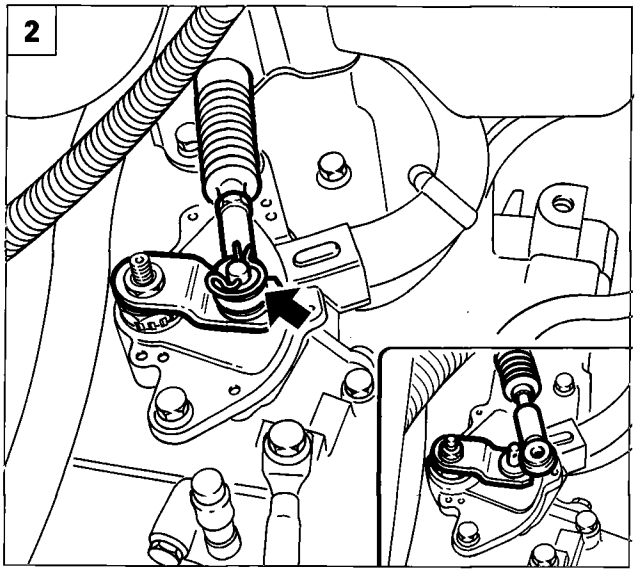

P4F41AB05

2. Remove the split pin and washer so as to disconnect the gear change cable from the lever on the sensor.
3. Undo the nut securing the lever to the sensor, then remove the lever.
4. Release the central nut from the washer and remove the nut, then undo the two side bolts securing the sensor and remove the sensor.

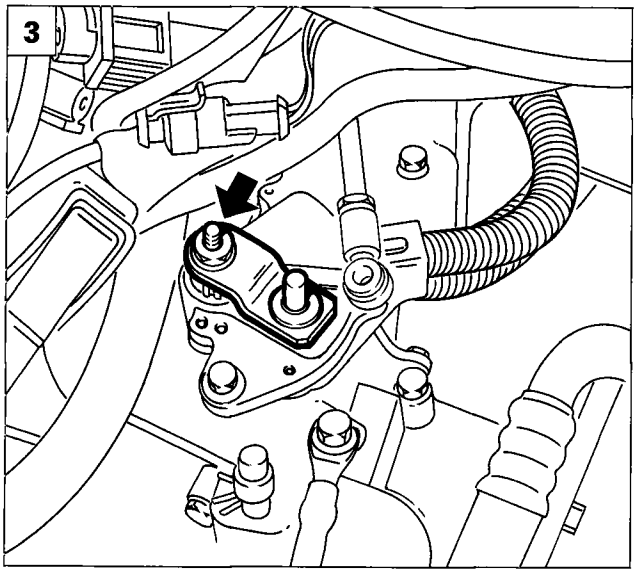

P4F46AB02

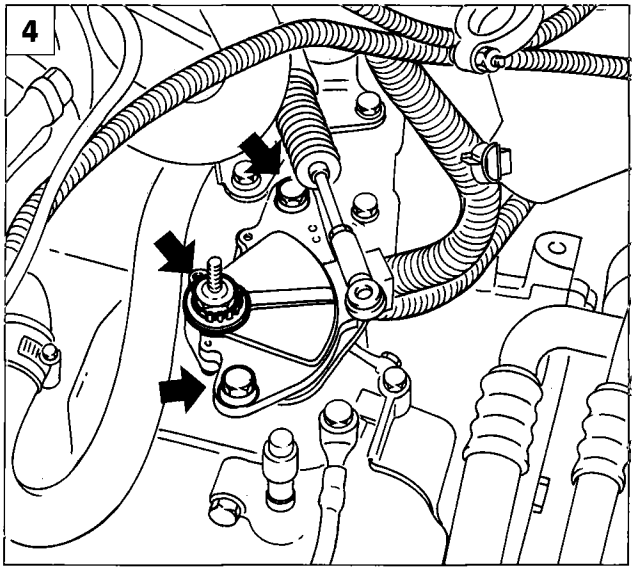

P4F46AB03

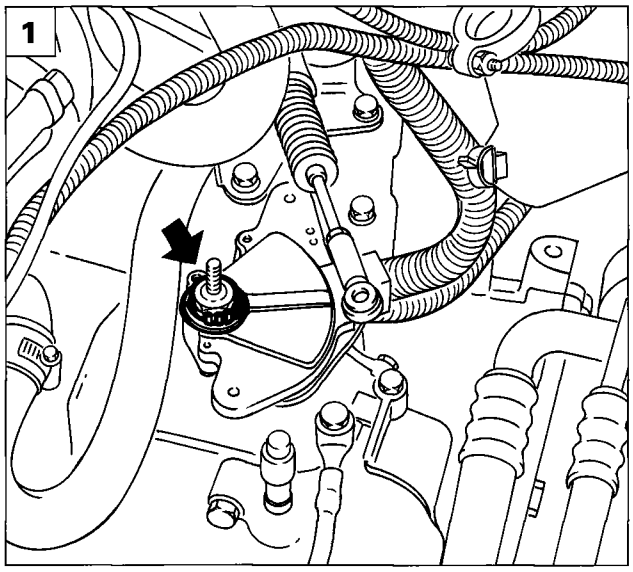

P4F47AB01

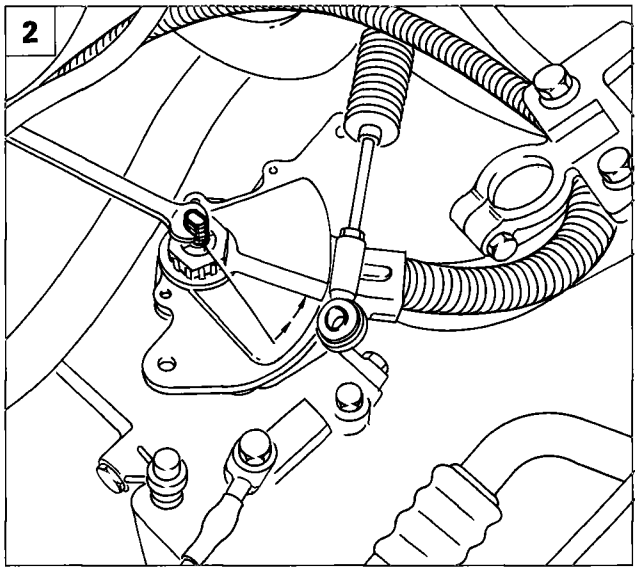

P4F47AB02

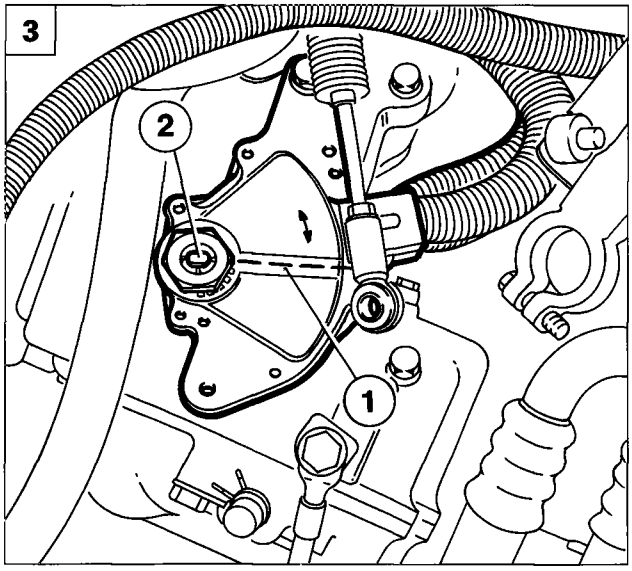

P4F47AB03

Refitting

Refit the selector lever position sensor as follows:

1. position the sensor, tighten the central nut and lock it with the washer;
2. from position P (fully rotated in a clockwise direction) move the pin of the lever to position N (rotating the pin two notches in an anti-clockwise direction);
3. rotate the sensor so that the projection on the top surface (1) lines up with the side machining on the pin (2), then lock the sensor in this position by tightening the two side screws.

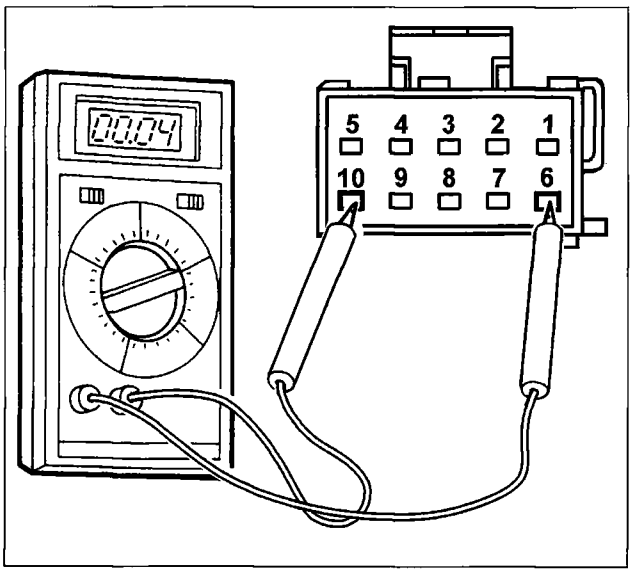

P4F47AB04

It is advisable to position the sensor using an ohmmeter connected between terminals 6 and 10 of the supply connector. Rotate the sensor to the centre of the area in which the ohmmeter detects continuity (contacts N and P closed), then tighten the sensor screws.

21-27.

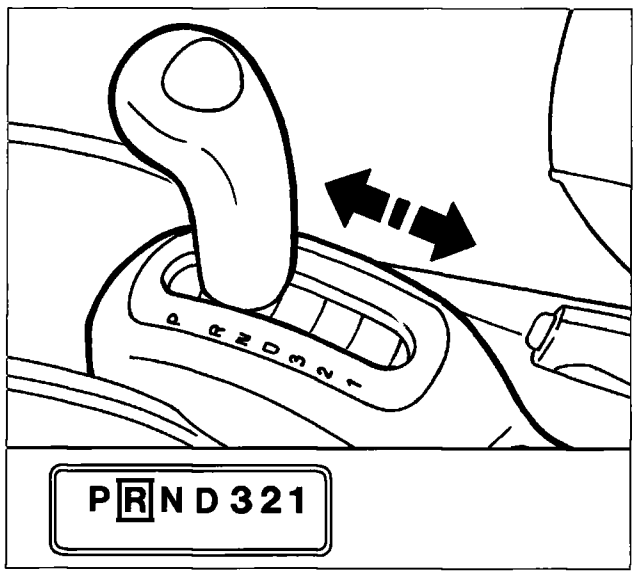

P4F45AB02

Finish refitting the selector lever position sensor by reversing the procedure for removal. Finally carry out the following checks:

- the engine must only start with the selector lever in position P or N;
- each position of the selector lever must be accompanied by the relevant indications on the indicator panel and instrument panel display.

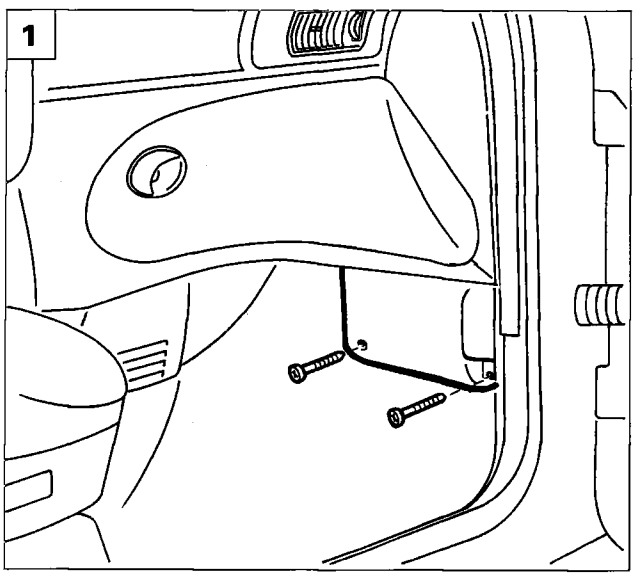

P4F48AB01

REMOVING-REFITTING GEARBOX CONTROL UNIT (CONTROL MODULE)

The gearbox control unit is located underneath the dashboard by the glove compartment.
Before proceeding with the removal operations, disconnect the negative lead from the battery, then:

1. Remove the plastic protection under the control unit.
2. Undo the nuts fixing the control unit to the mounting bracket, disconnect the appropriate supply connectors and remove the control unit.

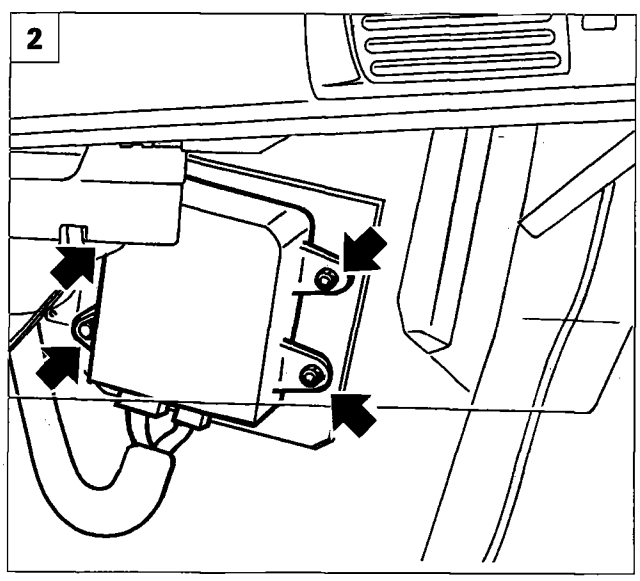

P4F48AB02

WARNINGS

- *Handle the control unit carefully to avoid any impact.*
- *Do not remove the control unit cover or try to dismantle it.*
- *Do not touch the connector pins directly.*
- *Insert the connector fully into the control unit until it clicks.*

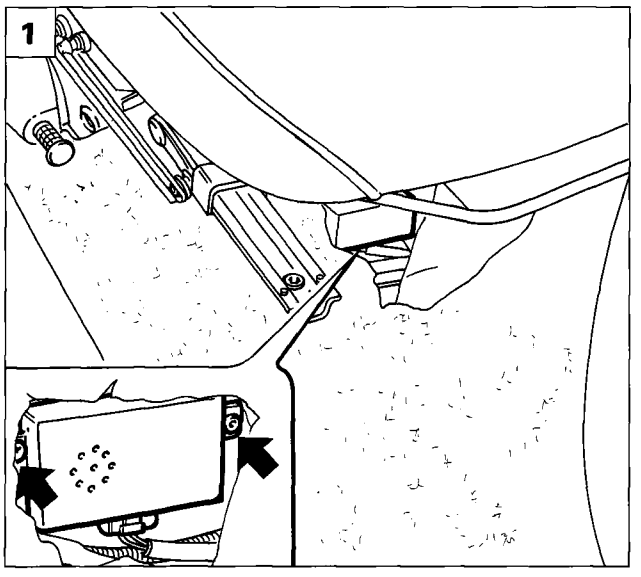

P4F49AB01

REMOVING-REFITTING SAFETY CONTROL UNIT

The safety control unit is located under the front passenger's seat. To remove it, first disconnect the battery's negative pole, then proceed as described below:

1. Push the front passenger's seat fully back so as to gain access to the safety control unit. Undo the bolts securing the control unit to the body shell, disconnect the supply wiring connector, then remove the control unit.

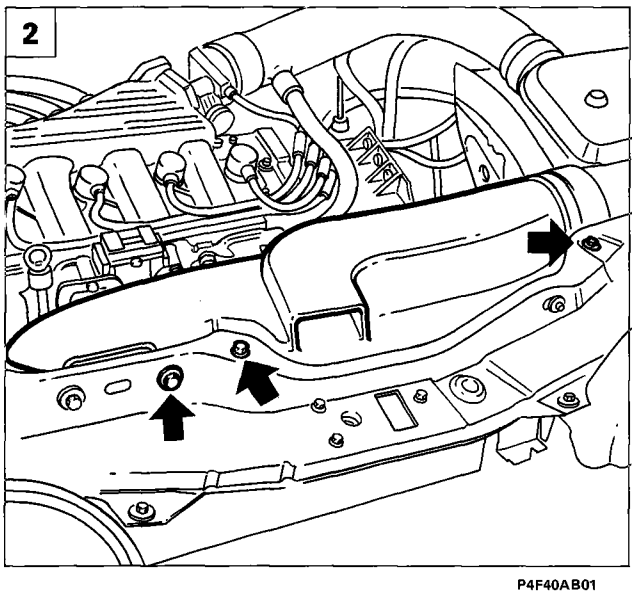

P4F40AB01

REMOVING-REFITTING GEARBOX OIL COOLING RADIATOR AND FAN

Place the car on ramps, disconnect the battery's negative pole, remove the front left wheel, drain the gearbox oil and then proceed as described below:

2. Remove the air intake duct by undoing the bolts shown in the figure, securing it to the front cross panel.
3. Disconnect the cooling fan supply wiring connector.
4. Raise the car and, working from the left wheelarch, undo the bolts securing the cooling fan, then remove the fan.

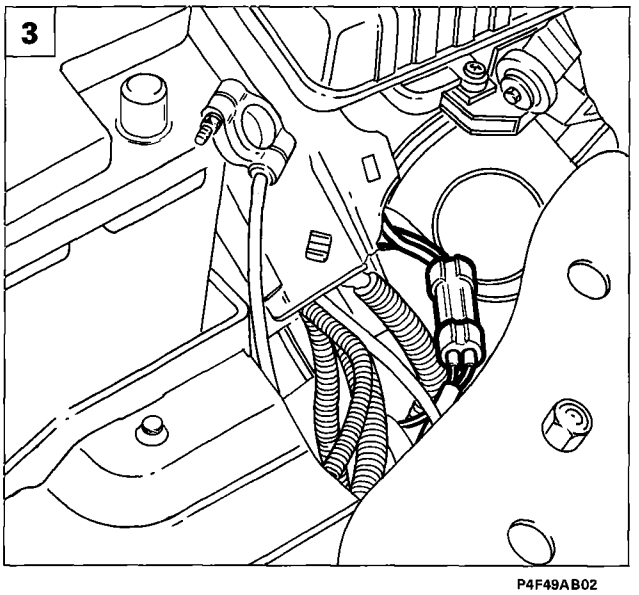

P4F49AB02

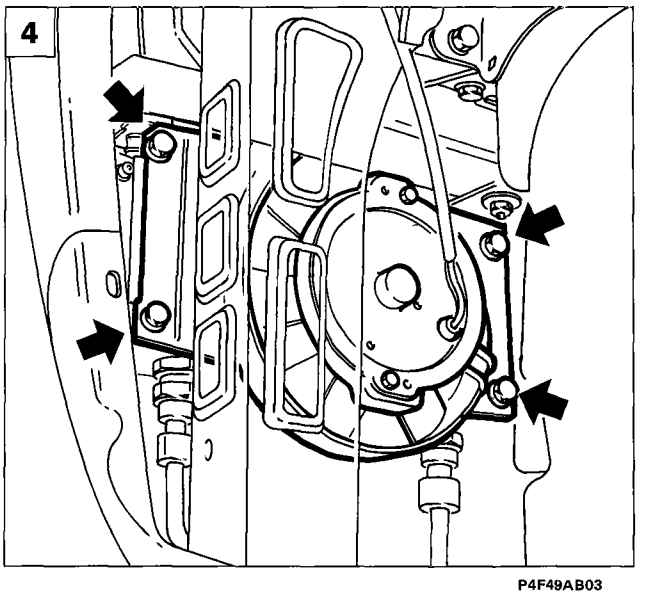

P4F49AB03

Copyright Fiat Auto

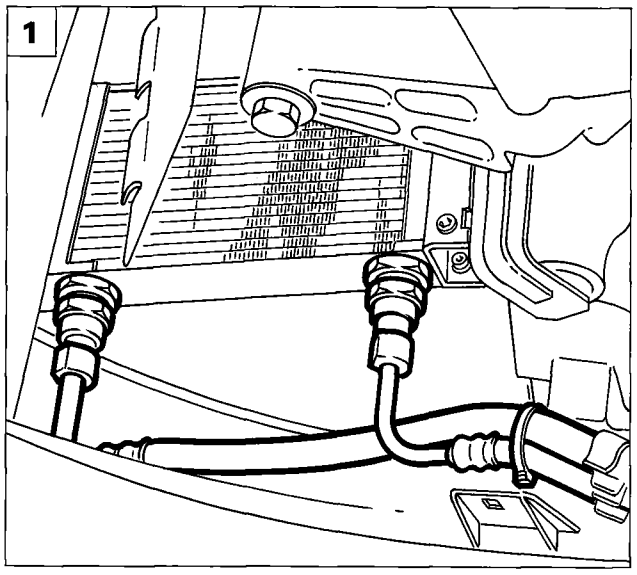

P4F50AB01

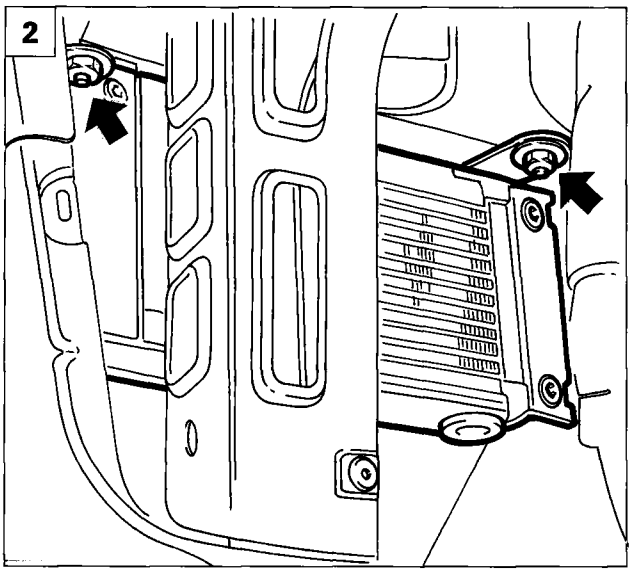

P4F50AB02

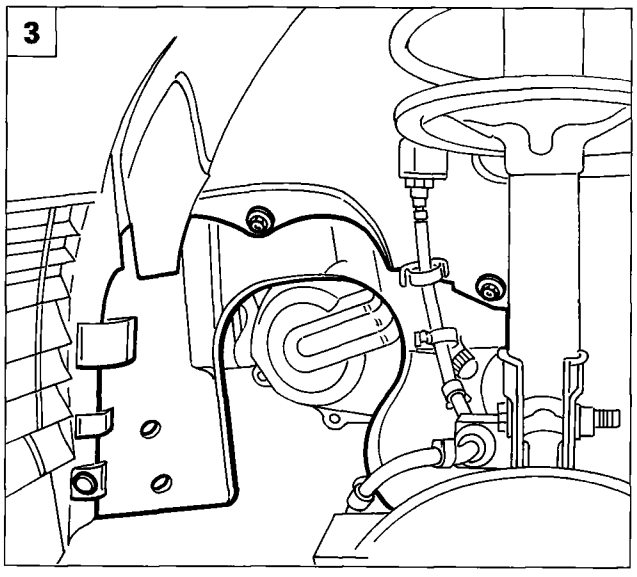

P4F50AB03

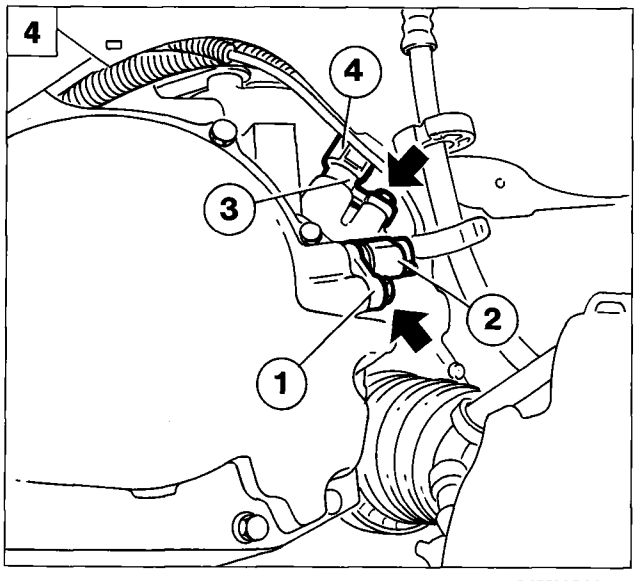

P4F50AB04

1. To remove the gearbox oil cooling radiator, first remove the fan, then disconnect the coolant inlet and outlet pipes from the radiator.
2. Undo the nuts shown in the figure, securing the radiator.
   To refit, reverse the procedure for removal, topping up the gearbox oil to the correct level.

MAIN SHAFT RPM SENSOR - VEHICLE SPEED SENSOR

Removing-refitting

Place the car on ramps, disconnect the battery's negative pole, remove the front left wheel, then:

3. Remove the left wheelarch trim in order to gain access to the sensors.
4. To remove the main shaft rpm sensor (1) (black), disconnect the relevant supply connector (2), then undo the bolt securing the sensor to the gearbox casing and remove the sensor by pulling it upwards.
   To remove the vehicle speed sensor (3) (grey), disconnect the supply connector (4), then undo the bolt securing the sensor to the gearbox casing and remove the sensor.

Check the resistance between the terminals:
- Main shaft rpm sensor: 387 - 473 Ω
- Vehicle speed sensor: 648 - 792 Ω

If the resistance is not within these values, replace the sensor concerned.

Always replace the seal; smear it with grease to avoid damage during fitting.

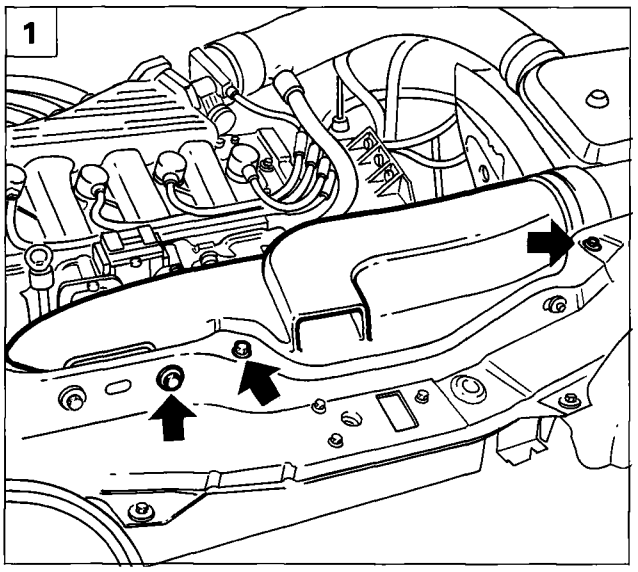

P4F40AB01

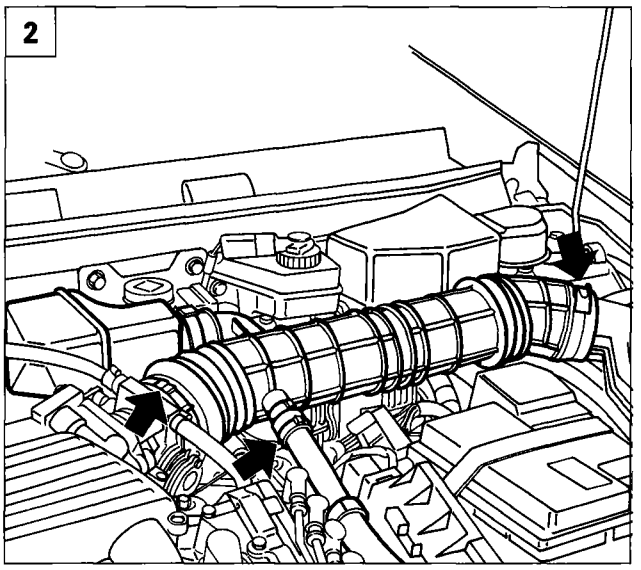

P4F51AB01

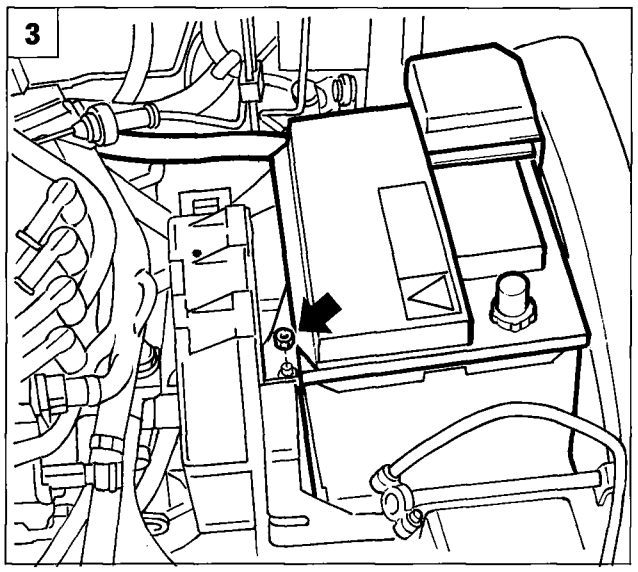

P4F40AB02

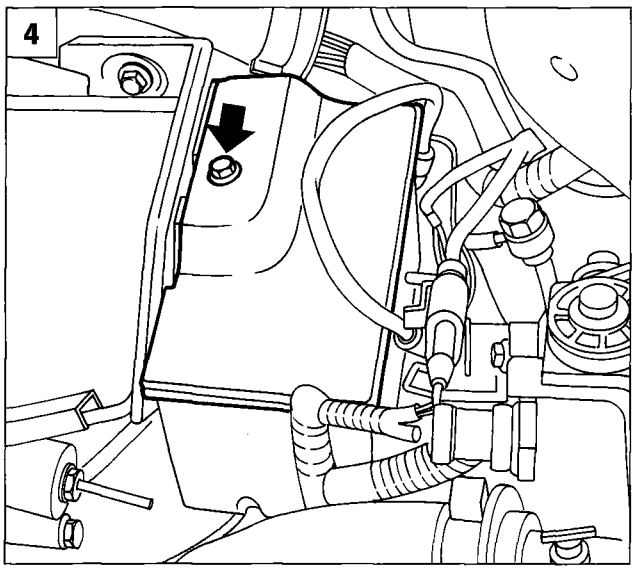

P4F40AB03

REMOVING-REFITTING GEARBOX

Place the car on ramps, disconnect the battery's negative pole, remove the front wheels and drain the gearbox oil, then proceed as described below:

1. Remove the air intake duct by undoing the bolts shown in the figure, securing it to the front cross panel.
2. Remove the air inlet pipe by undoing the clips shown in the figure, then remove it from the engine compartment complete with resonator.
3. Left the cover protecting the battery's positive pole and disconnect the cable; undo the nut securing the battery to the cage, then remove the battery from the engine compartment.
4. Remove the relay and fuse box cover by undoing the bolt indicated.

21-27.

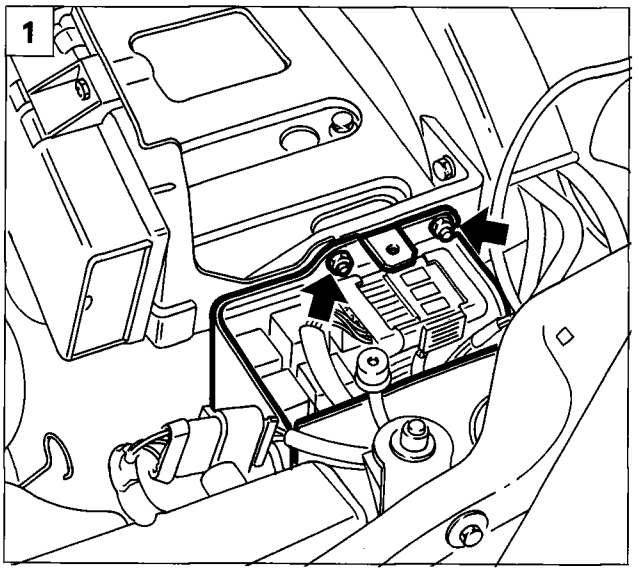

P4F41AB01

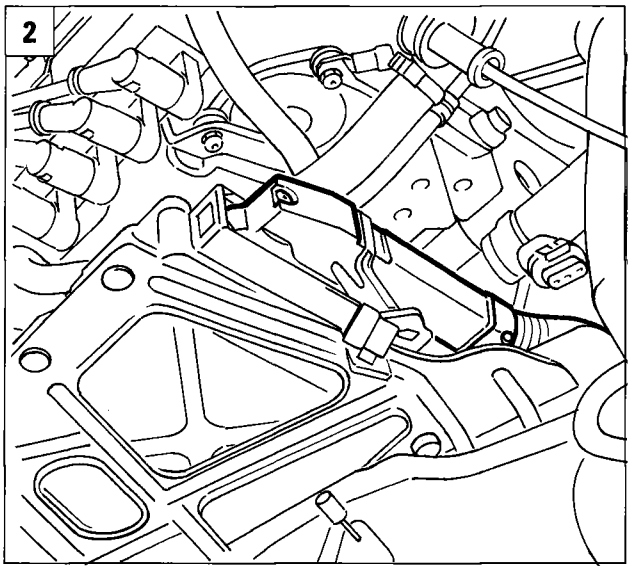

P4F52AB01

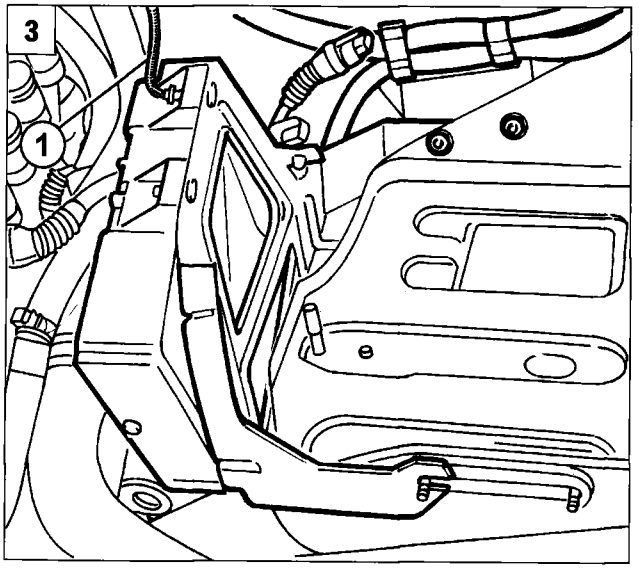

P4F41AB03

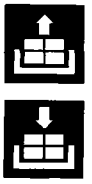

1. Remove the nuts securing the fuse and relay box to the battery cage, then move the box over to one side.
2. Disconnect the i.e. control unit supply connector.
3. Disconnect the earth cable (1), remove the nuts securing the i.e. control unit mounting bracket, then remove the control unit from the engine compartment. The nuts indicated also secure the starter motor supply cables and the front cable/fuel injection cable connection.
4. Remove the bolts (1) and slacken the bolt (2) securing the battery cage to the body shell. Before removing the cage, disconnect the cable retaining clip underneath.
5. Remove the split pin and washer shown in the figure; lift the gear change control cable head so as to disconnect it from the gear change lever position sensor.

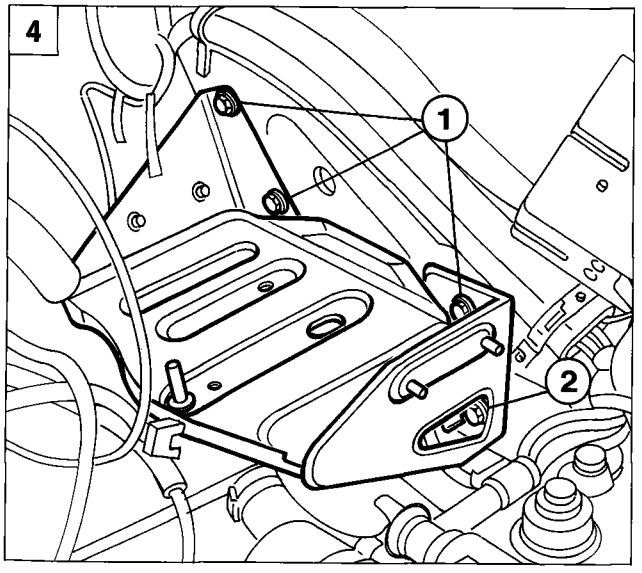

P4F41AB04

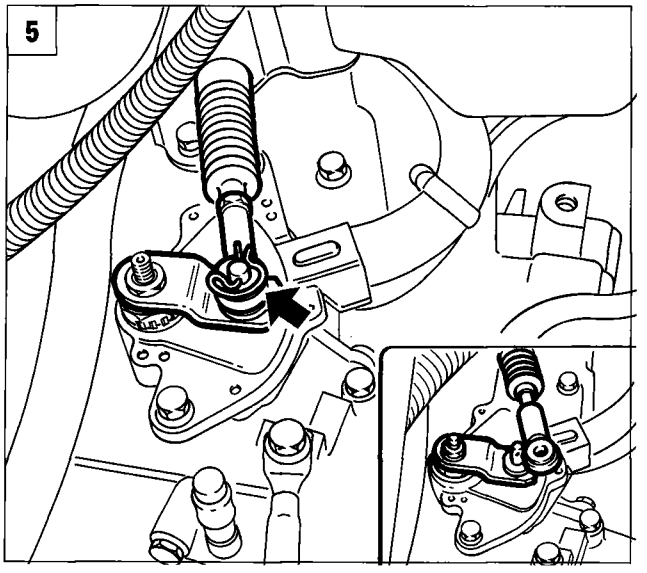

P4F41AB05

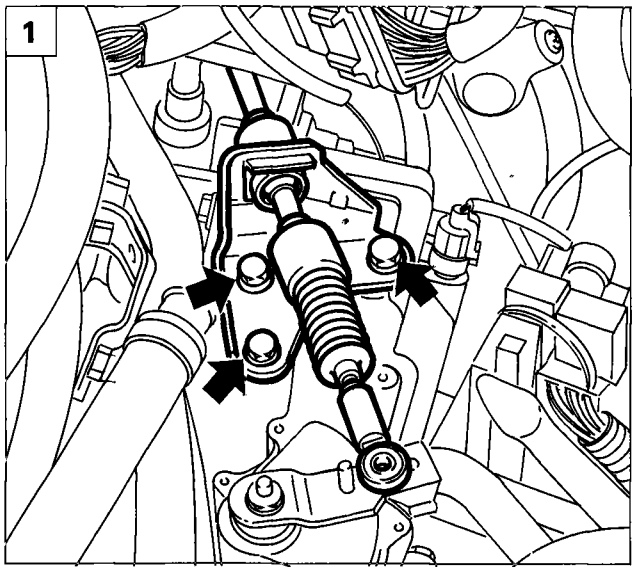

P4F53AB01

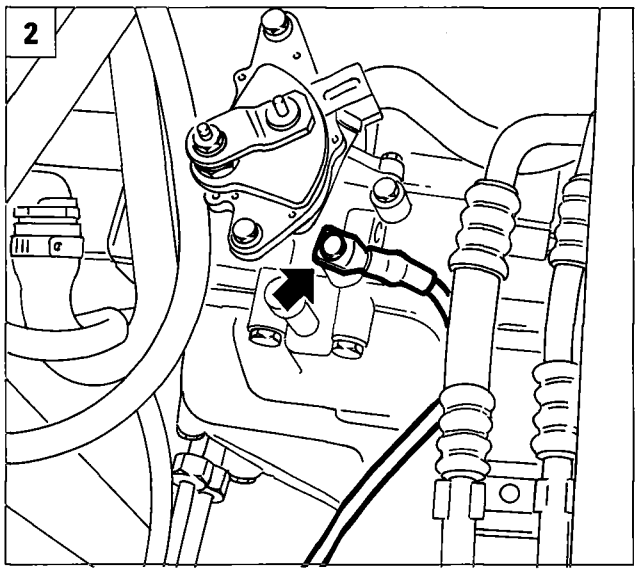

P4F53AB02

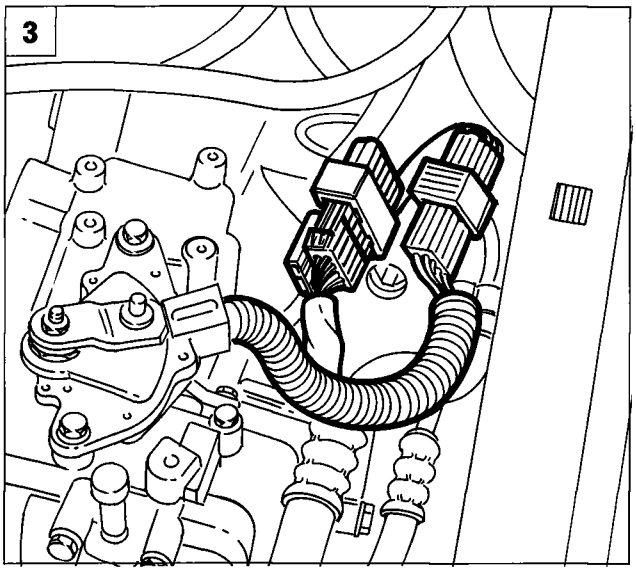

P4F53AB03

1. Remove the nuts securing the gear change control cable mounting bracket, and move it over to one side.
2. Disconnect the earth cable shown in the figure, from the gearbox.
3. Disconnect the connectors shown in the figure of the selector lever position sensor and solenoids (gear change, lock-up clutch control and pressure control) after releasing them from the retaining clips.
4. Disconnect the connector shown in the figure.
5. Disconnect the speedometer drive cable.

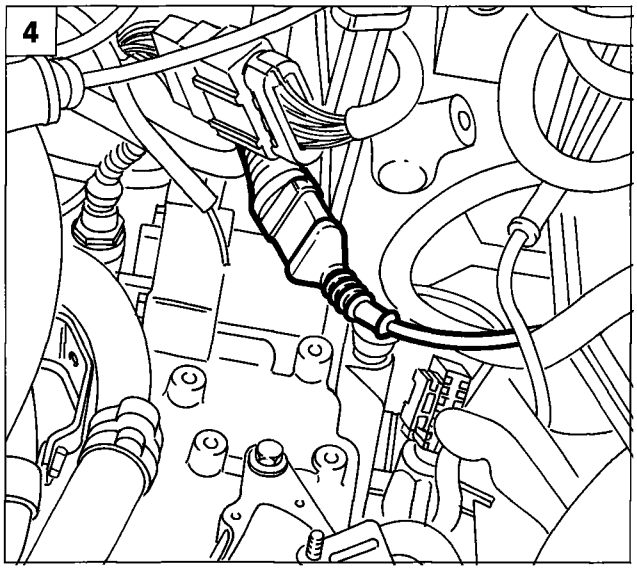

P4F53AB04

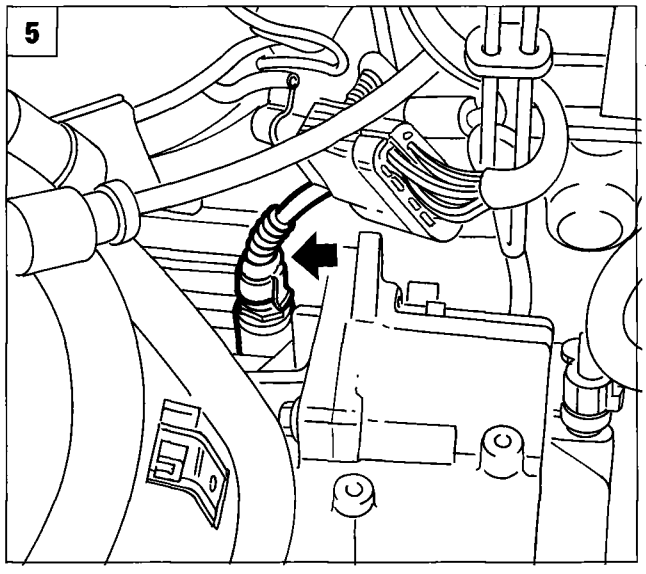

P4F53AB05

21-27.

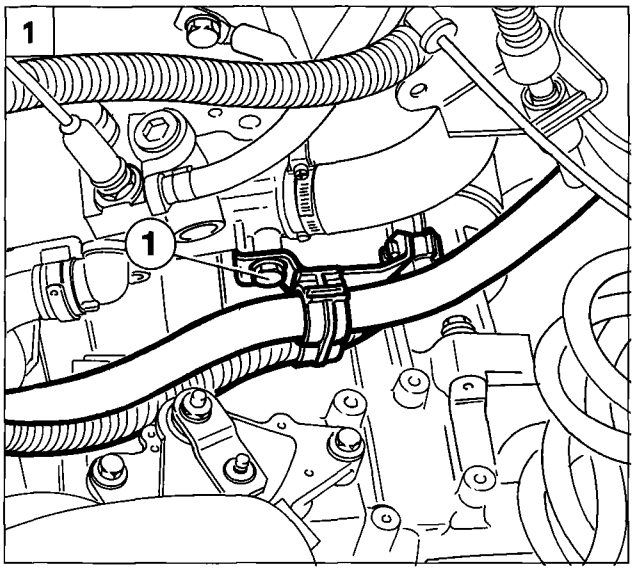

P4F54AB01

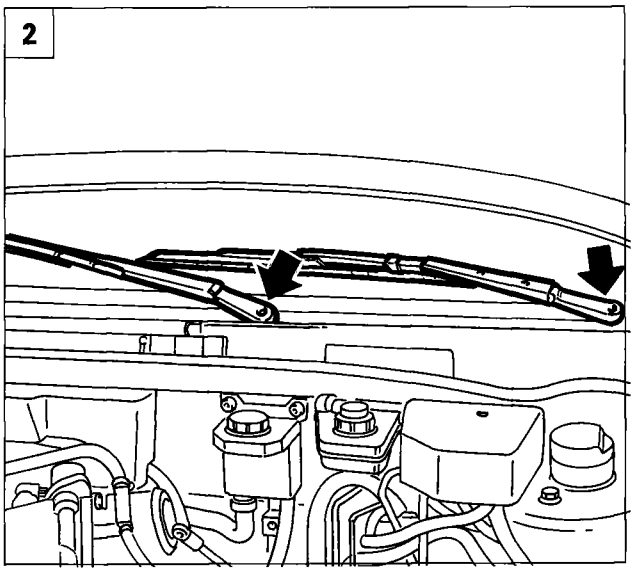

P4F54AB02

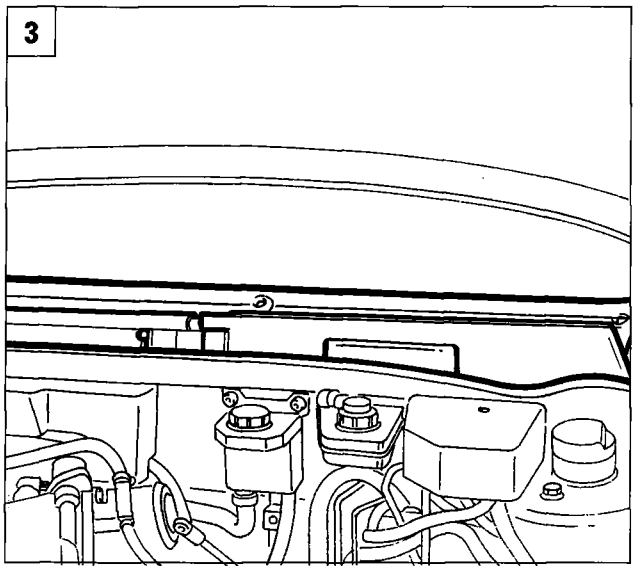

P4F54AB03

1. Remove the bolt (1) securing the retaining bracket for the pipes shown in the figure.
2. Remove the windscreen wiper arms (right and left) by undoing the central fixing nut, after removing the protective cap.
3. Remove the plastic covers from the space under the windscreen, to allow the engine support tool to be installed during removal and refitting of the gearbox.
4. Remove the gearbox top mountings.
5. Fit a suitable supporting eye at the point shown in the figure, to hook up the power unit during removal of the gearbox.

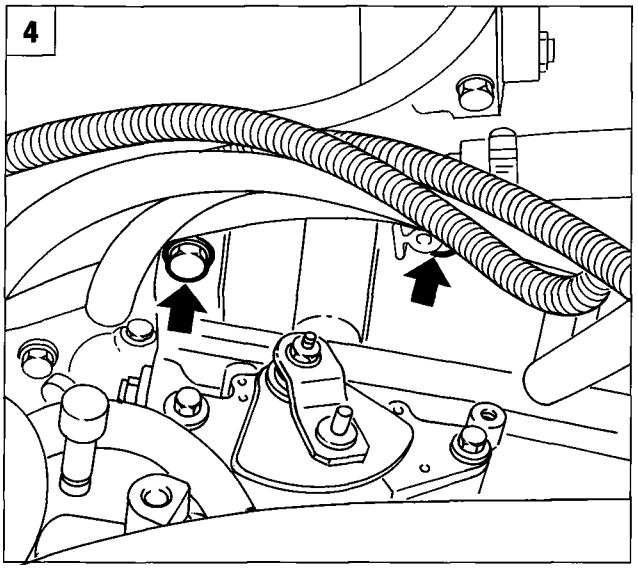

P4F54AB04

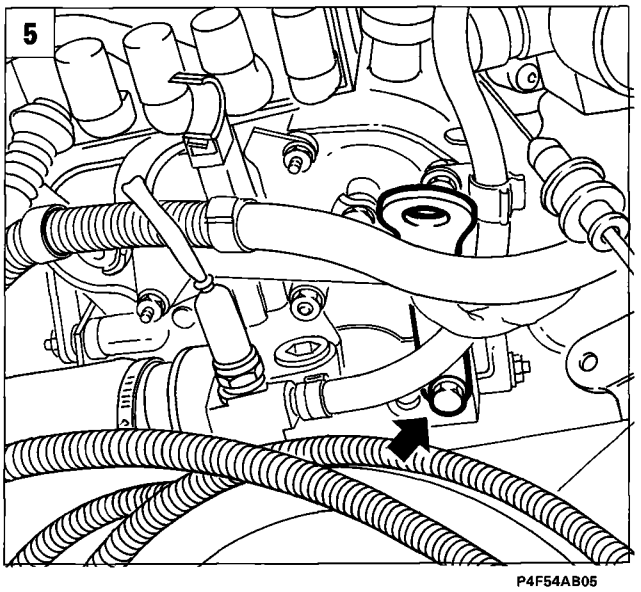

P4F54AB05

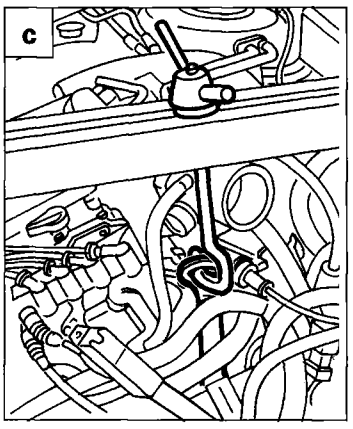

P4F55AB02

1. Fit the engine support crossbeam 1860851000 and the special adaptor 1860851001 at the appropriate mounting points.

   a. Front mounting: fit the tool in the bonnet catch seating, so that it rests on the front cross member.
   b. Rear mounting: fit the tool level with the central reinforcement of the fire-proof bulkhead.
   c. Secure the cross member hook to the eye positioned previously, near the thermostat.

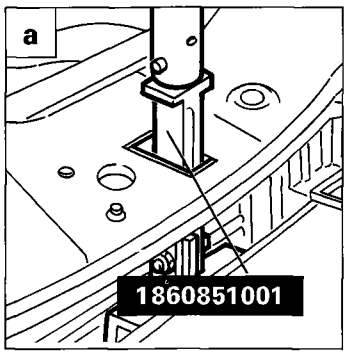

P4F55AB03

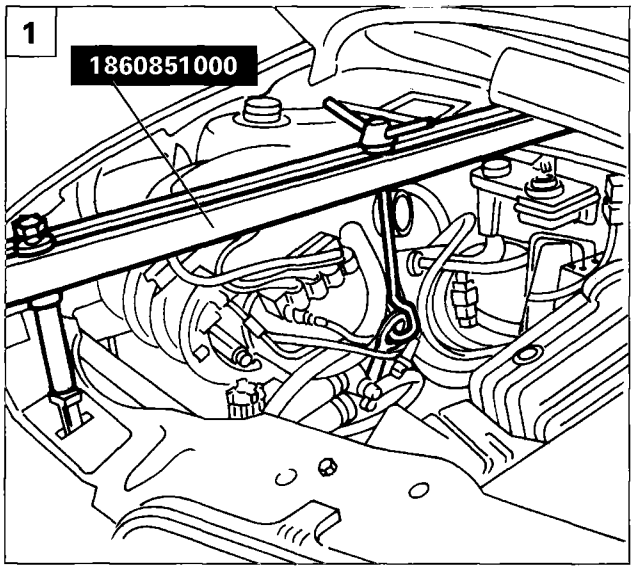

P4F55AB01

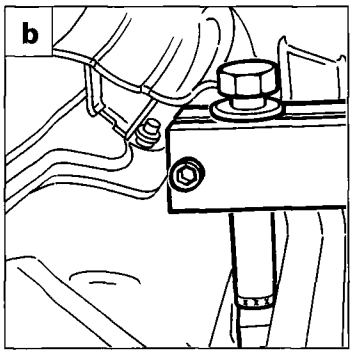

P4F55AB04

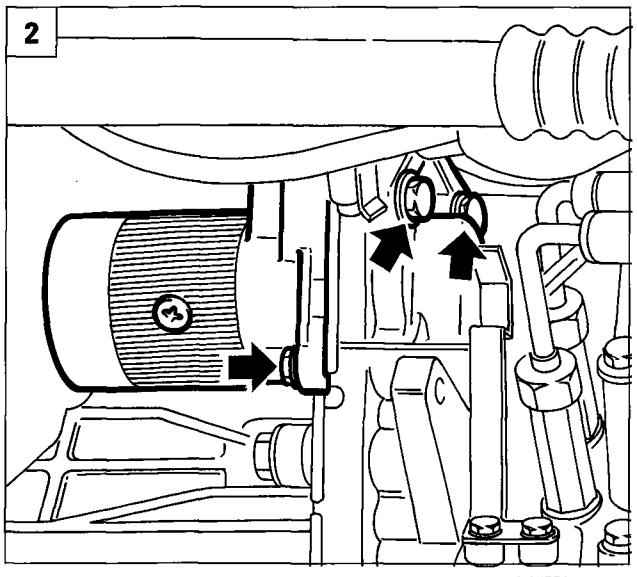

P4F55AB05

2. Remove the starter motor by undoing its bolts; then move the starter motor to one side, securing it, taking care not to damage the supply cables.

21-27.

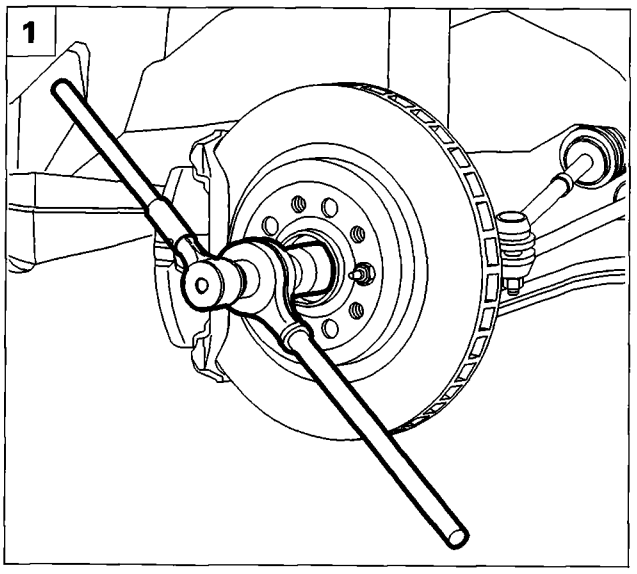

P4F56AB01

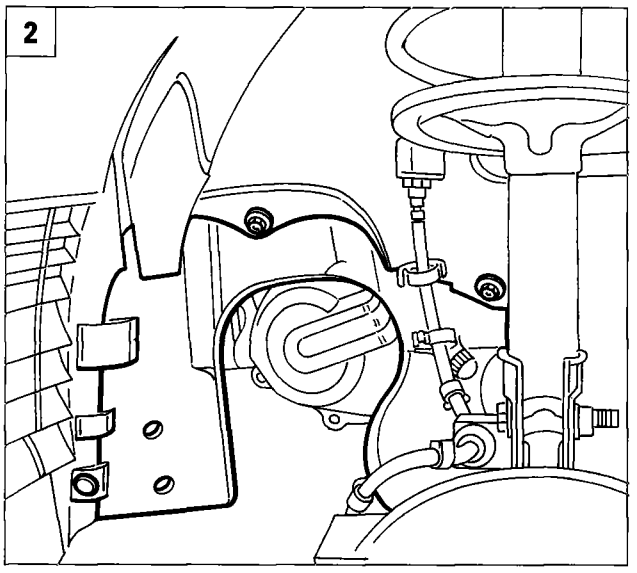

P4F50AB03

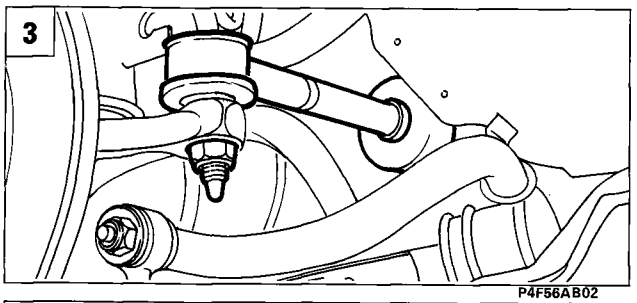

P4F56AB02

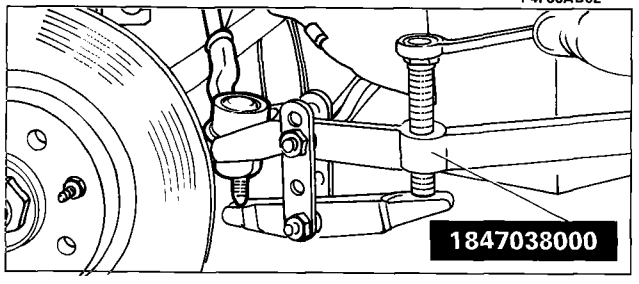

P4F56AB03

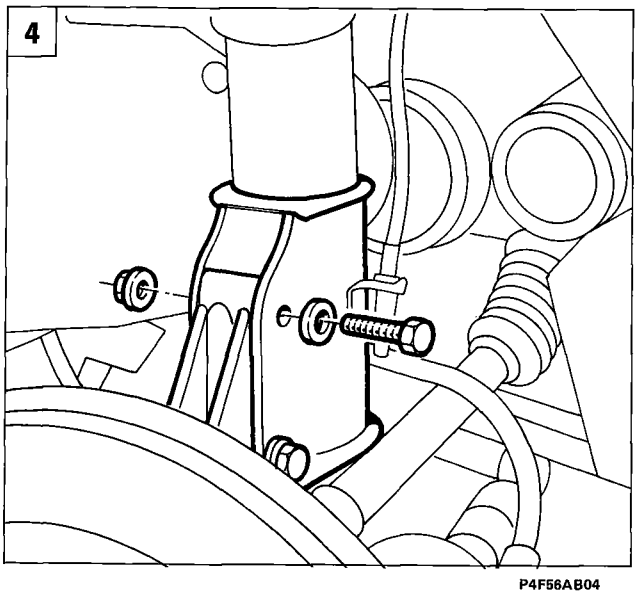

P4F56AB04

1. Relieve the staking then remove the wheel hub nut (gearbox side and timing gear side).
2. Remove the plastic wheelarch trim on the gearbox side by undoing the screws and retaining button shown in the figure. To remove the trim, also disconnect the brake pad wear sensor connector (repeat the operation on the other side).
3. Remove the nut securing the track rod end to the vertical link, then remove the latter from the vertical link arm using the puller 1847038000 (repeat the procedure on the other track rod end).
4. Remove the bolts securing the vertical link (gearbox side and timing gear side) to the shock absorber.

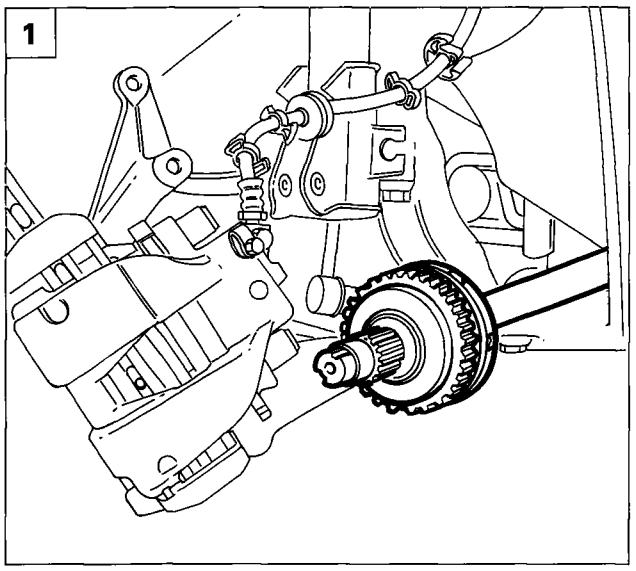

P4F57AB01

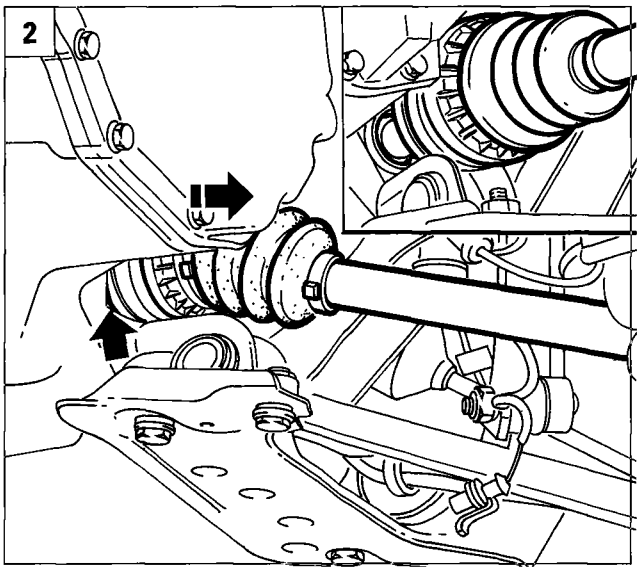

P4F57AB02

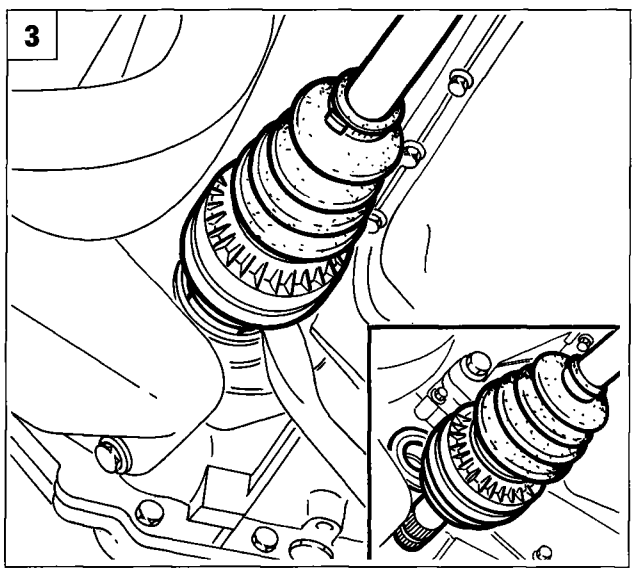

P4A57AB03

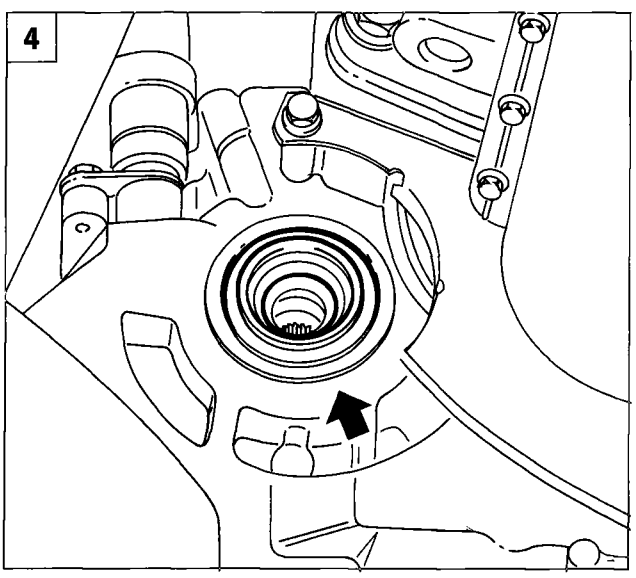

P4F57AB04

1. Rotate the vertical link so as to withdraw the drive shaft from the wheel hub (repeat the procedure for the other drive shaft).
2. Disconnect the drive shaft on the gearbox side from the differential, levering on the anchorage point, and move it away from the working area.
3. Disconnect the drive shaft on the timing gear side from the differential, levering on the anchorage point.
4. Differential oil seals.

When withdrawing the drive shafts, take care not to damage the differential seals. Withdraw them perfectly horizontally.

5. Remove the connectors shown in the figure in order to disconnect the oil pipes from the gearbox. Then place the pipes over to one side.

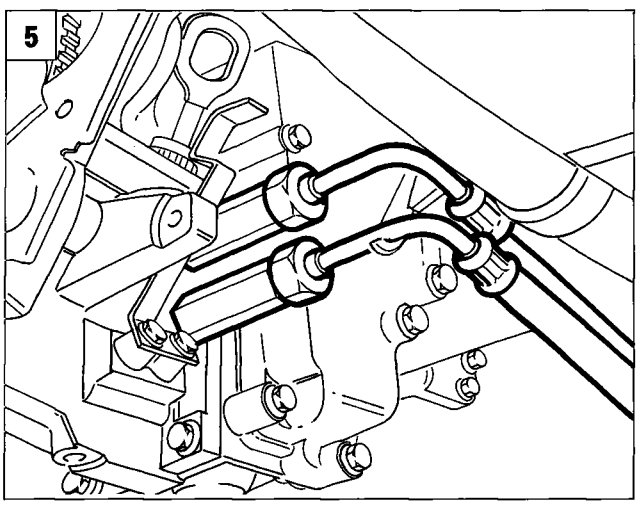

P4F57AB05

21-27.

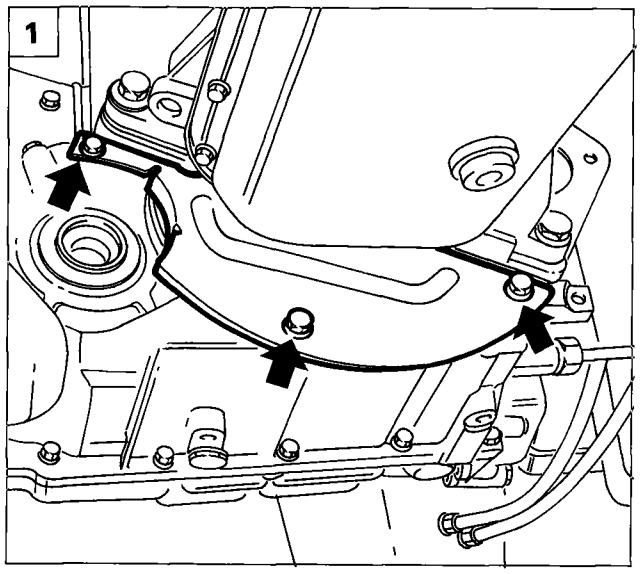

P4F58AB01

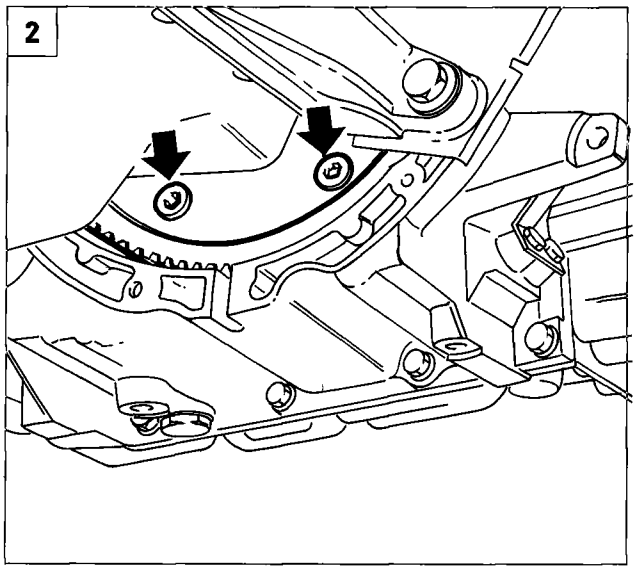

P4F58AB02

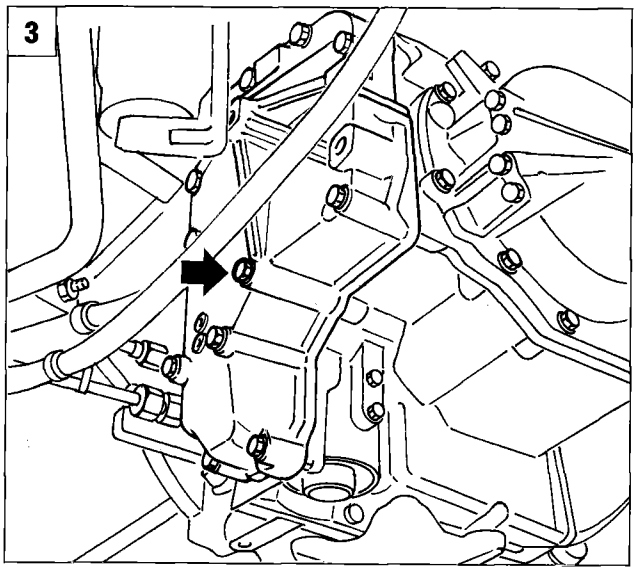

P4F58AB03

1. Remove the guard shown in the figure from the bottom of the gearbox.
2. Remove the bolts securing the converter to the flywheel. First undo the two visible bolts, then turn the crankshaft to gain access to the remaining bolts (total of 6).

3. Undo the bolt shown in the fibure from the valve assembly cover to allow the gearbox support tool to be installed.

4-5. Place the gearbox support tool 1860873000 on a hydraulic jack, then secure it to the gearbox at the points shown in the figure. To fit the tool correctly, also fit a bracket (1), to be manufactured on site, of the dimensions shown in the insert (dimensions in mm).

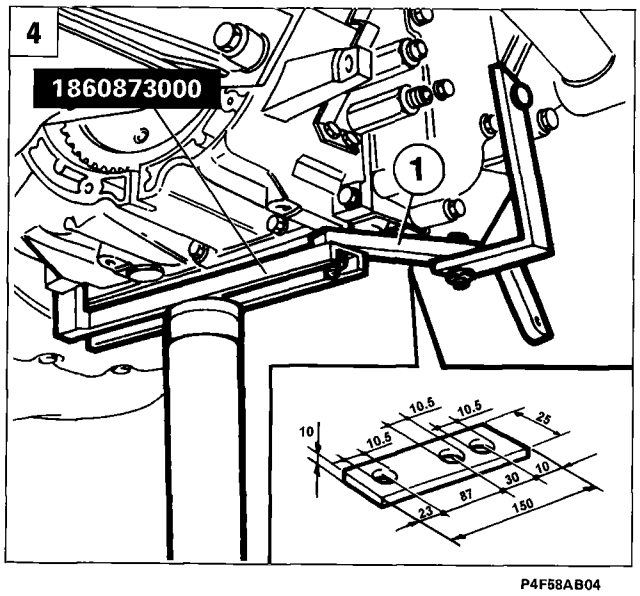

P4F58AB04

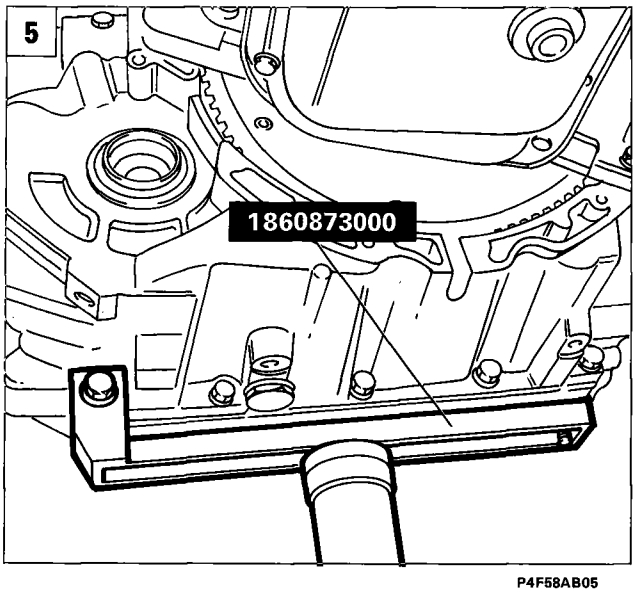

P4F58AB05

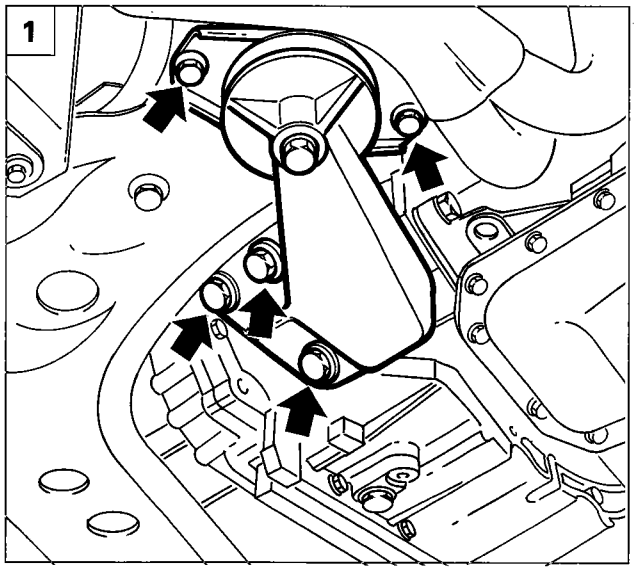

P4F59AB01

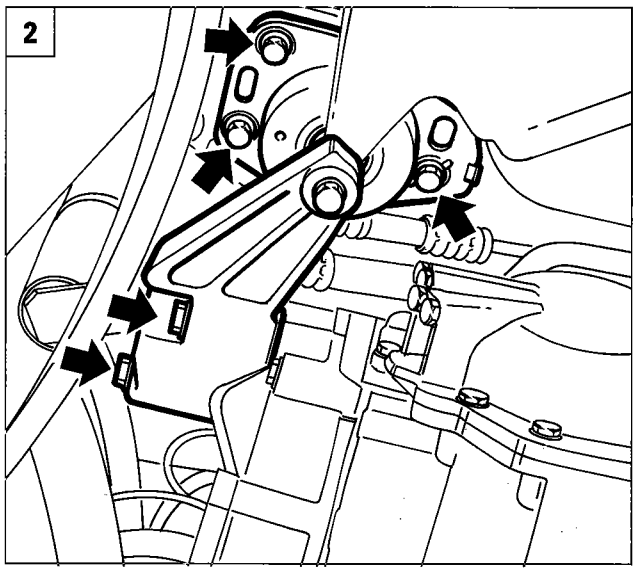

P4F59AB02

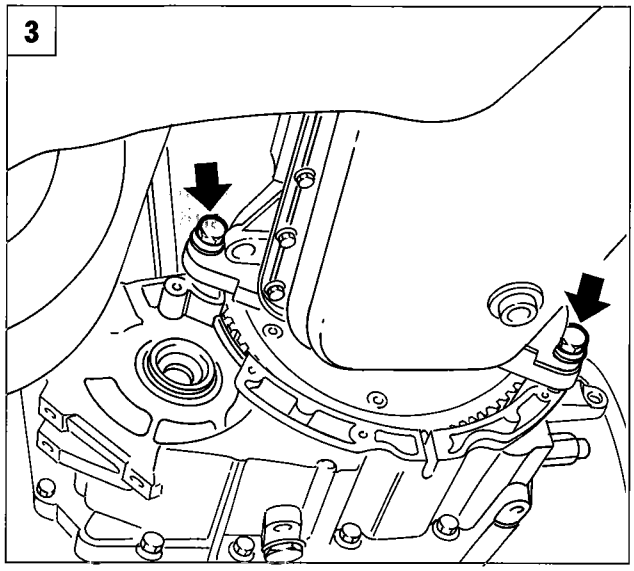

P4F59AB03

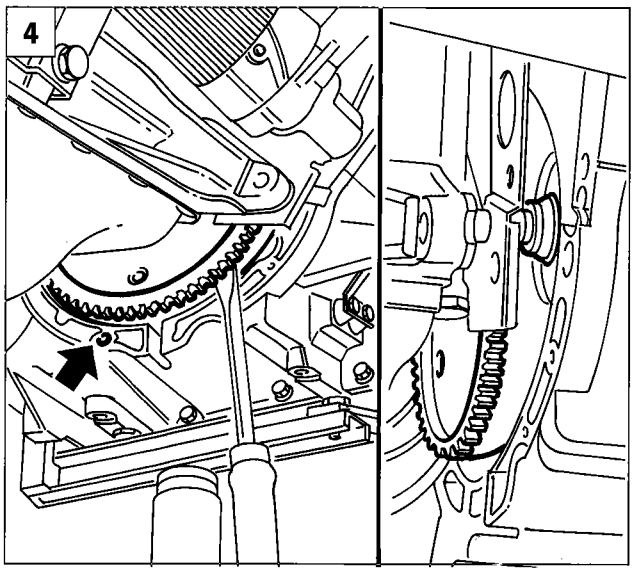

P4F59AB04

1. Remove the power unit central mounting by undoing the bolts shown in the figure.
2. Remove the power unit mounting on the gearbox side by undoing the bolts shown in the figure.
3. Remove the bottom bolts securing the gearbox to the engine.
4. Gently separate the bellhousing from the engine, then manoeuvre the converter back into its seating. For greater safety, fit a bracket, to be manufactured on site, screwing it into the seat of the bolt securing the gearbox bottom guard, to prevent the converter falling out of its seating.

21-27.

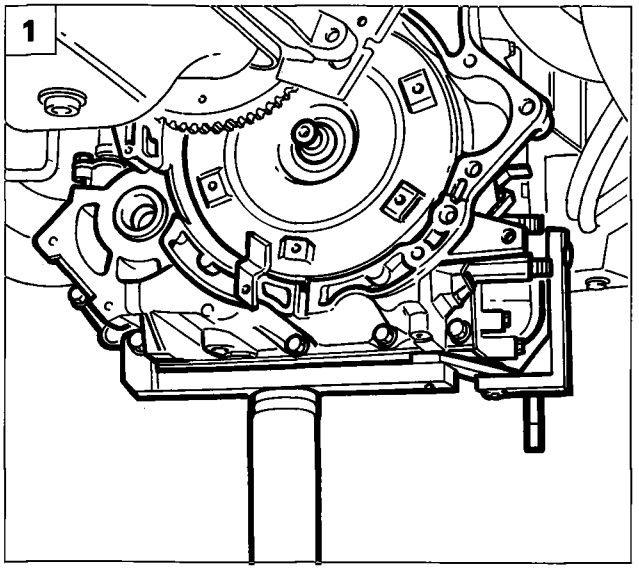

P4F60AB01

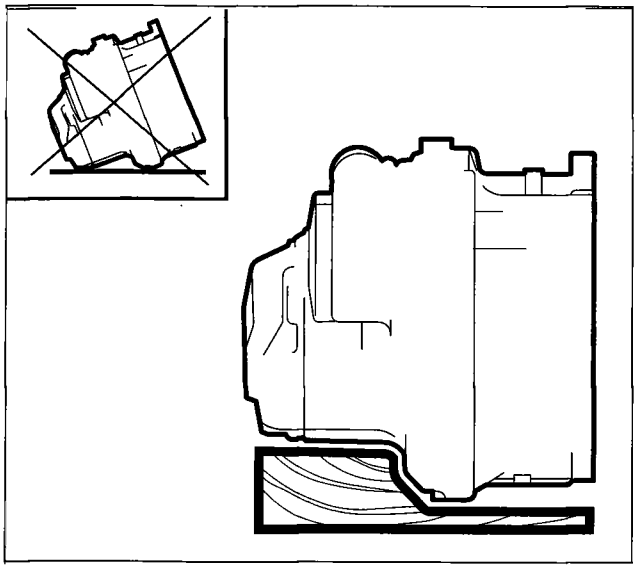

P4F60AB02

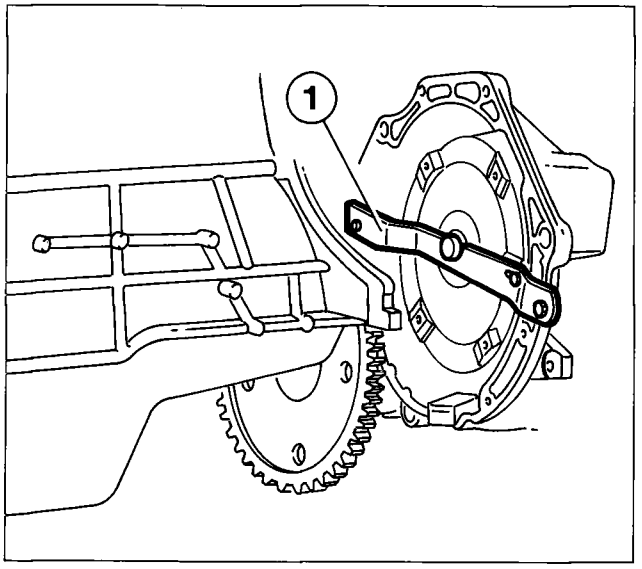

P4F60AB03

1. Manoeuvre the hydraulic jack as appropriate to release the gearbox from the surrounding parts. Gradually lower the jack and withdraw the gearbox.

Take particular care to prevent the converter falling out of its seating.

When refitting, fit the gear change control cable, then carry out the checks described for removal of the cable.

NOTE *Top up the gearbox oil level and check that there are no leaks from the drain plug (tighten to 2.35 - 5.49 daNm).*

WARNINGS

After releasing the cable from the support tool, do not place it directly on the floor, to avoid damaging its structure and the external components. Interpose a suitably shaped wooden wedge.

If the gearbox is replaced, before fitting the new transmission, remove the bracket (1) in the converter seating and the plugs on the differential outlet, fitted to stop foreign bodies entering the gearbox. Remove the above-mentioned plugs perfectly horizontally, to avoid damaging the oil seals (2) on the differential and to prevent the spring (3) inside the seals from falling out.

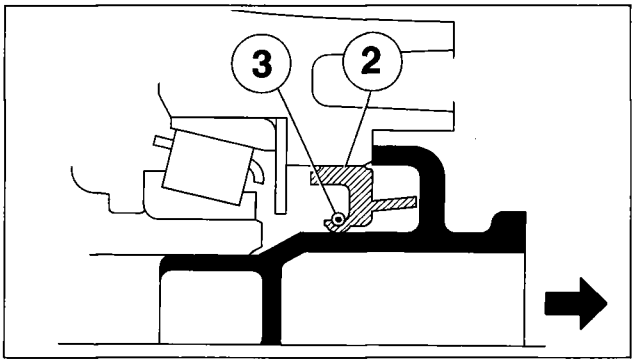

P4F60AB04

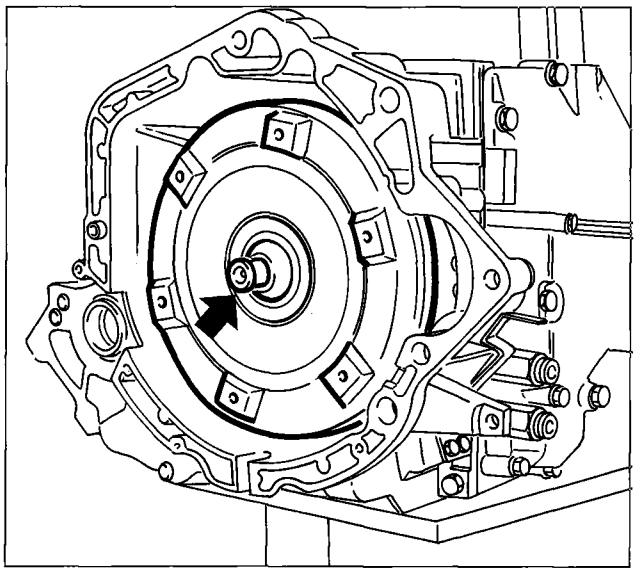

P4F61AB01

Do not damage the converter centring nose while fitting the gearbox. If the point is damaged, it could fail to fit onto the cranskshaft correctly, and consequently damage the converter and oil pump.

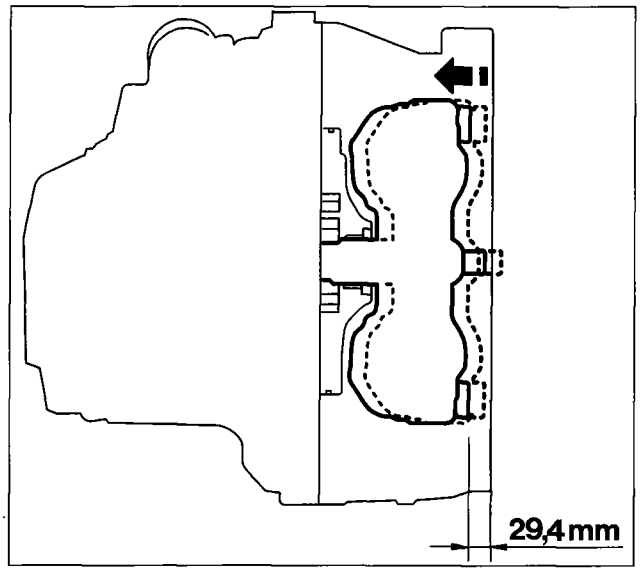

P4F61AB02

Before fitting the transmission, make sure that the converter is fitted properly on the oil pump. If it is not fitted properly, the bush and oil pump gearing could be damaged.

Make sure that the distance between the holes of the bolts securing the converter to the flywheel and the gearbox front surface is 29.4 mm.

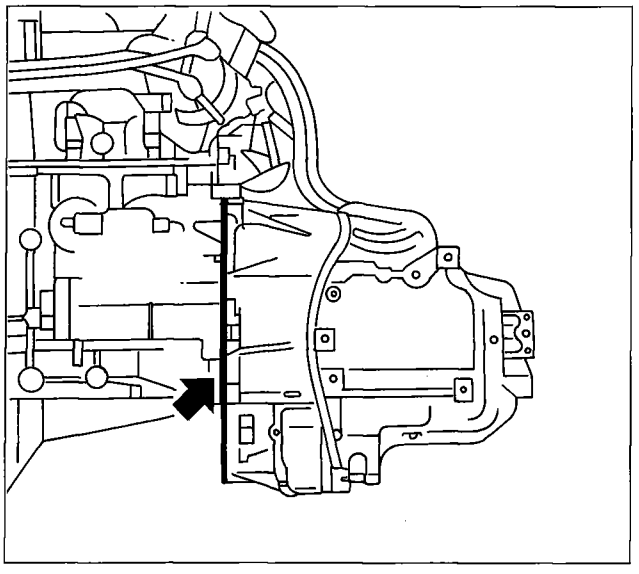

P4F61AB03

When fitting the gearbox, check that the centring pins are positioned correctly, and also check that there is no gap between the contact line between the engine and gearbox casing.

Copyright Fiat Auto

21-27.

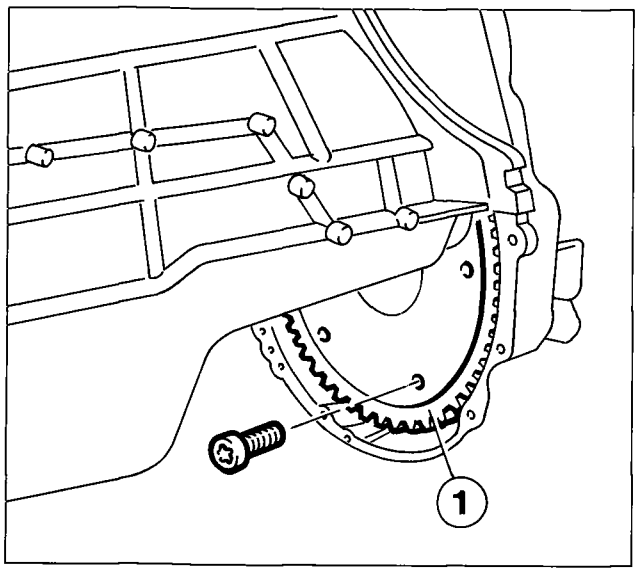

P4F62AB01

When coupling the converter to the flywheel, use bolts of the correct length (M8x1.25 bolts with tapered shakeproof washer drawing 46450230, of the dimensions indicated in the figure) and make sure that they are not mixed up with other bolts.

1. Bolts which are too long could damage the other end of the converter and deform the clutch seal.
2. Bolts which are too short may not withstand the input torque and could break.

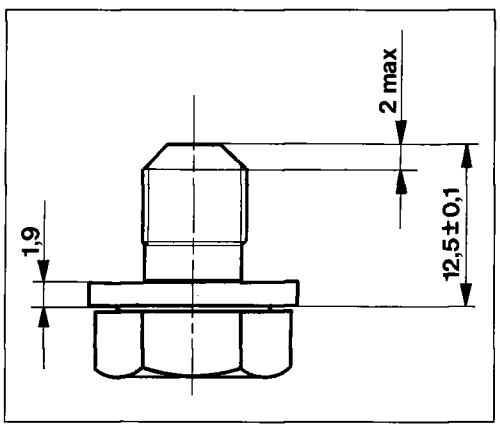

P4F62AB02

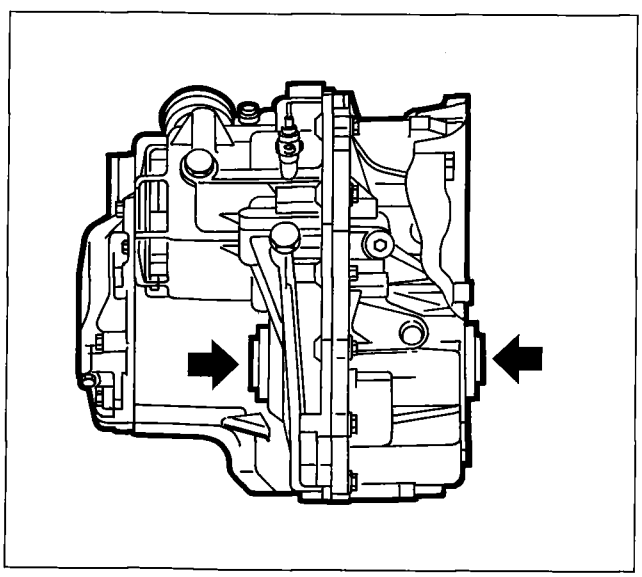

P4F62AB03

When fitting the drive shafts, take particular care not to damage the differential oil seal (2) on the splined part (1) of the drive shaft. Insert the drive shaft perfectly horizontally. If the seal is damaged, it could cause oil leaks.

Make sure that the drive shaft is clean before assembly to avoid foreign bodies entering into the differential.

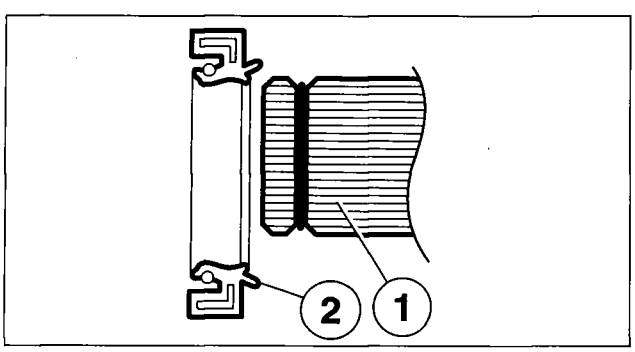

P4F62AB04

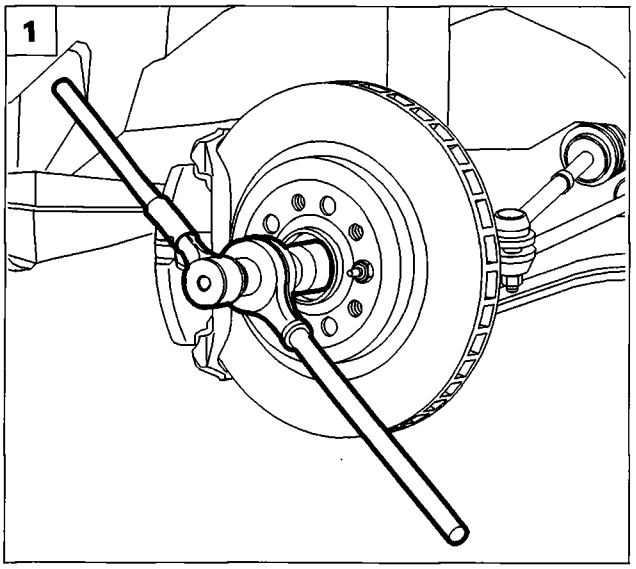

P4F56AB01

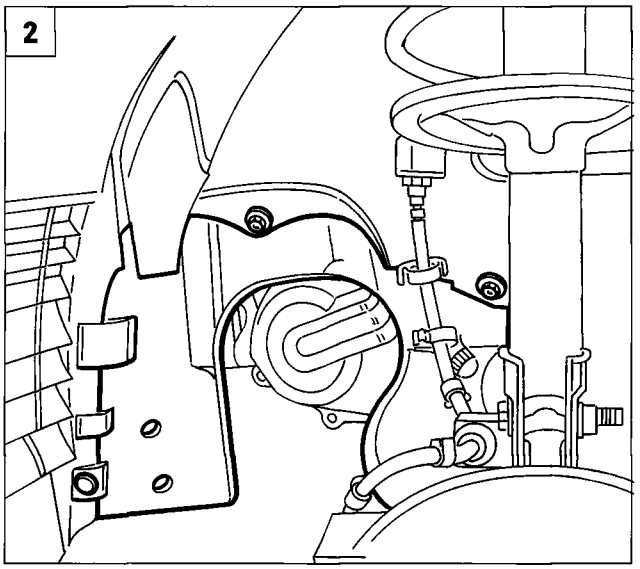

P4F50AB03

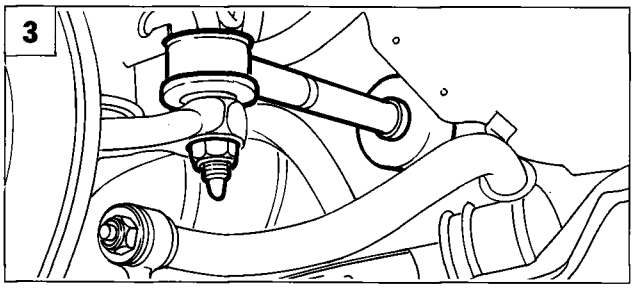

P4A56AB02

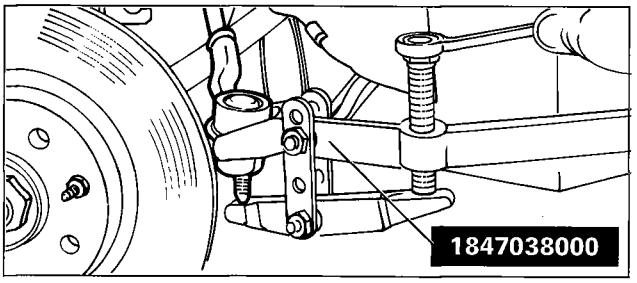

P4A56AB03

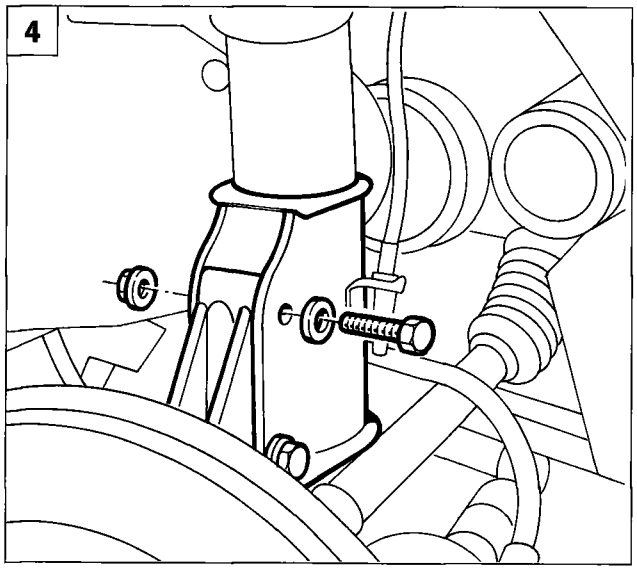

P4F56AB04

REMOVING-REFITTING

Place the vehicle on ramps, remove the front wheels, drain the gearbox oil and then proceed as described below:

1. Relieve the staking then remove the wheel hub nut (gearbox side and timing gear side).
2. Remove the wheelarch plastic trim on the gearbox side by undoing the bolts and retaining button shown in the figure. To remove the trim, also disconnect the brake pad wear sensor (repeat the procedure for the other side).
3. Remove the nut securing the track rod end to the vertical link, the remove the latter from the vertical link arm using the puller 1847038000 (repeat the procedure on the other track rod end).
4. Remove the bolts securing the vertical link (gearbox side and timing gear side) to the shock absorber.

Copyright Fiat Auto

21-27.

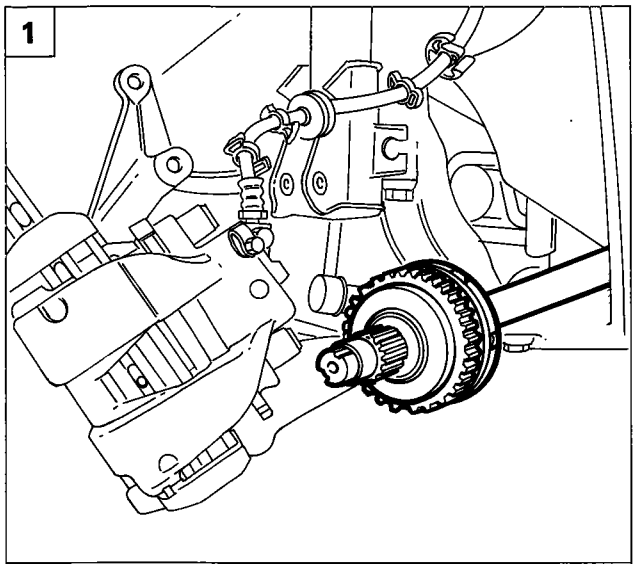

P4F57AB01

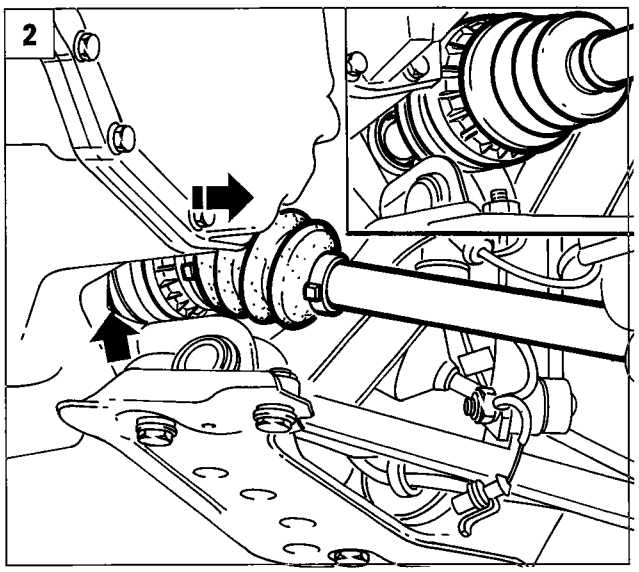

P4F57AB02

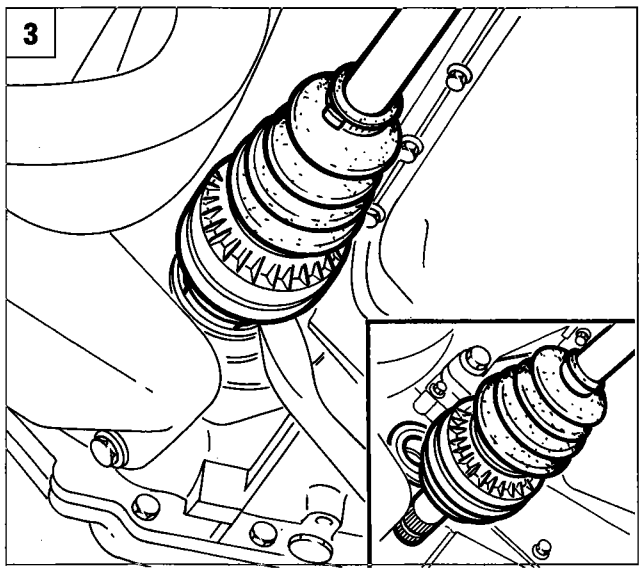

P4F57AB03

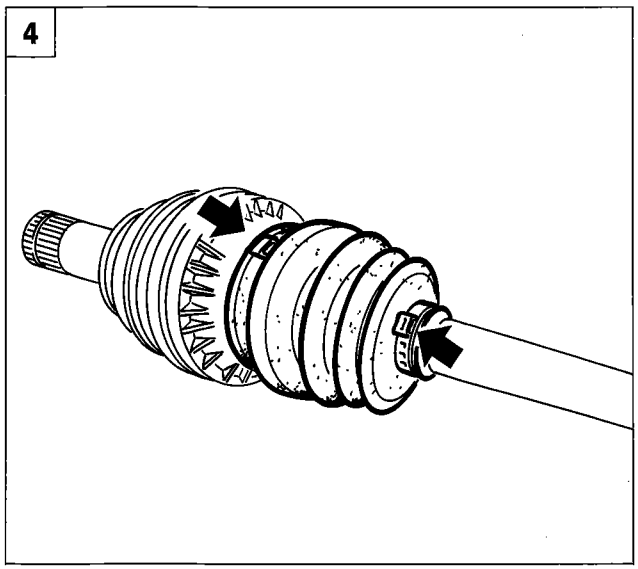

P4F64AB01

1. Rotate the vertical link in order to withdraw the drive shaft from the wheel hub (repeate the procedure for the other side).
2. Disconnect the drive shaft on the gearbox side from the differential, levering on the anchorage point.
3. Disconnect the drive shaft on the timing gear side from the differential, levering on the anchorage point.

NOTE *When refitting, reverse the procedure for removal, tightening the wheel hub nut to the specified torque.*

To remove and refit the drive shafts, bear in mind the warnings mentioned under removing-refitting the gearbox.

DISMANTLING-REASSEMBLY

4. Place the drive shaft in a vice, then remove the clips retaining the protective gaiter on the sliding joint on the gearbox side.

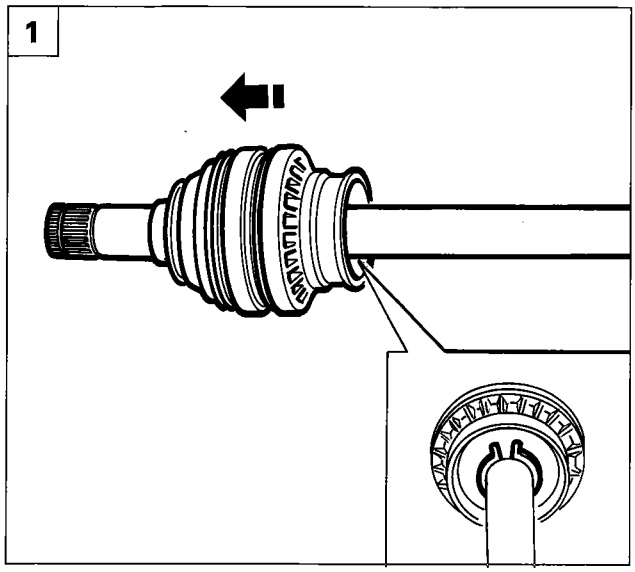

P4F65AB01

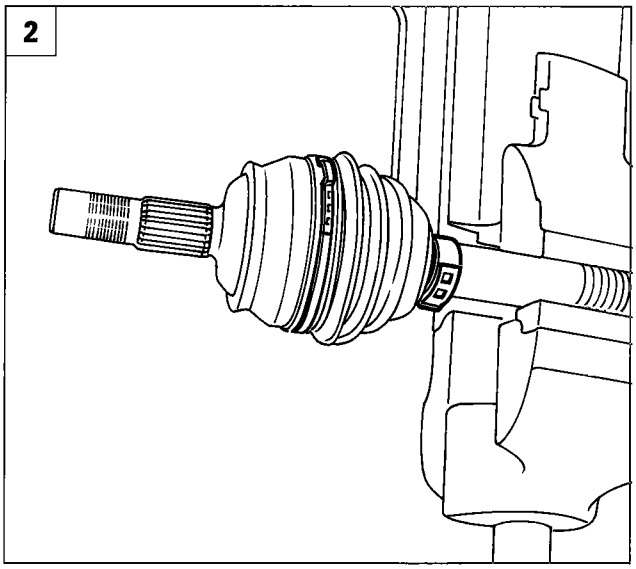

P4F65AB02

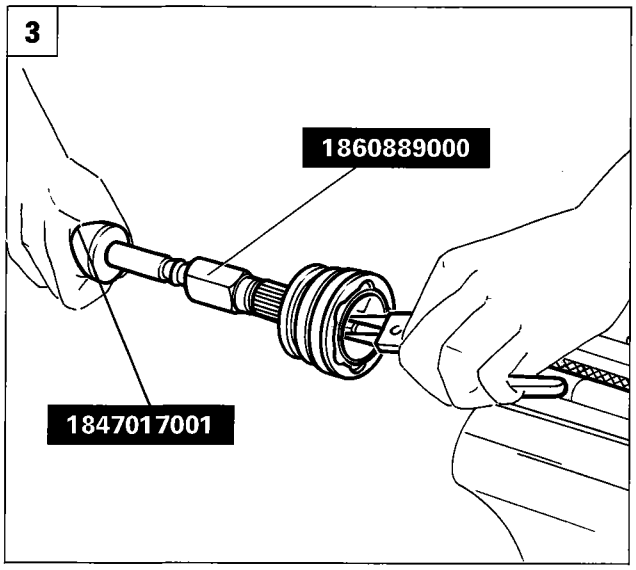

P4F65AB03

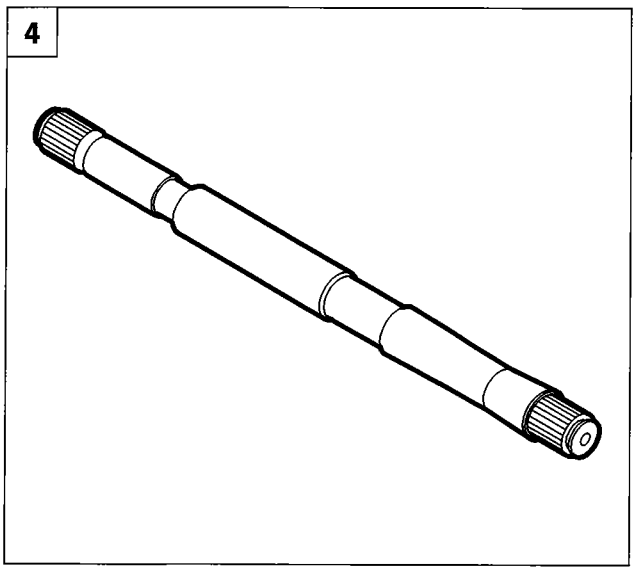

P4F65AB04

1. Remove the circlip retaining the sliding joint (gearbox side), then remove the joint by withdrawing it from the drive shaft.
2. Undo the clips retaining the protective gaiter on the constant velocity joint on the wheel side, then remove the gaiter from the side opposite the drive shaft.
3. Degrease the inside of the constant velocity joint. Using tools 1847017001 and 1860889000, and holding the circlip inside the joint at the same time, remove the joint from the drive shaft.
4. Check that the drive shaft is not deformed or out of true, and that the surface in contact with the seal is not worn.

REFITTING

When refitting, reverse the procedure described for removal.
Whenever a gaiter is removed, it is advisable to replace it, and it is important to fill both the constant velocity joint or sliding joint and the gaiter with TUTELA MRM2 grease.

21-27.

Drive shaft-joint coupling, wheel side			
Shaft classification		Joint classification	
Category	Colour	Category	Colour
2	Green	2	Green
3	White	3	White

When refitting, the constant velocity joints must be coupled to the shaft as indicated in the table. Conduct a final check on the joint, to make sure that there are no signs of seizure or scoring.

TRANSMISSION COMPONENTS

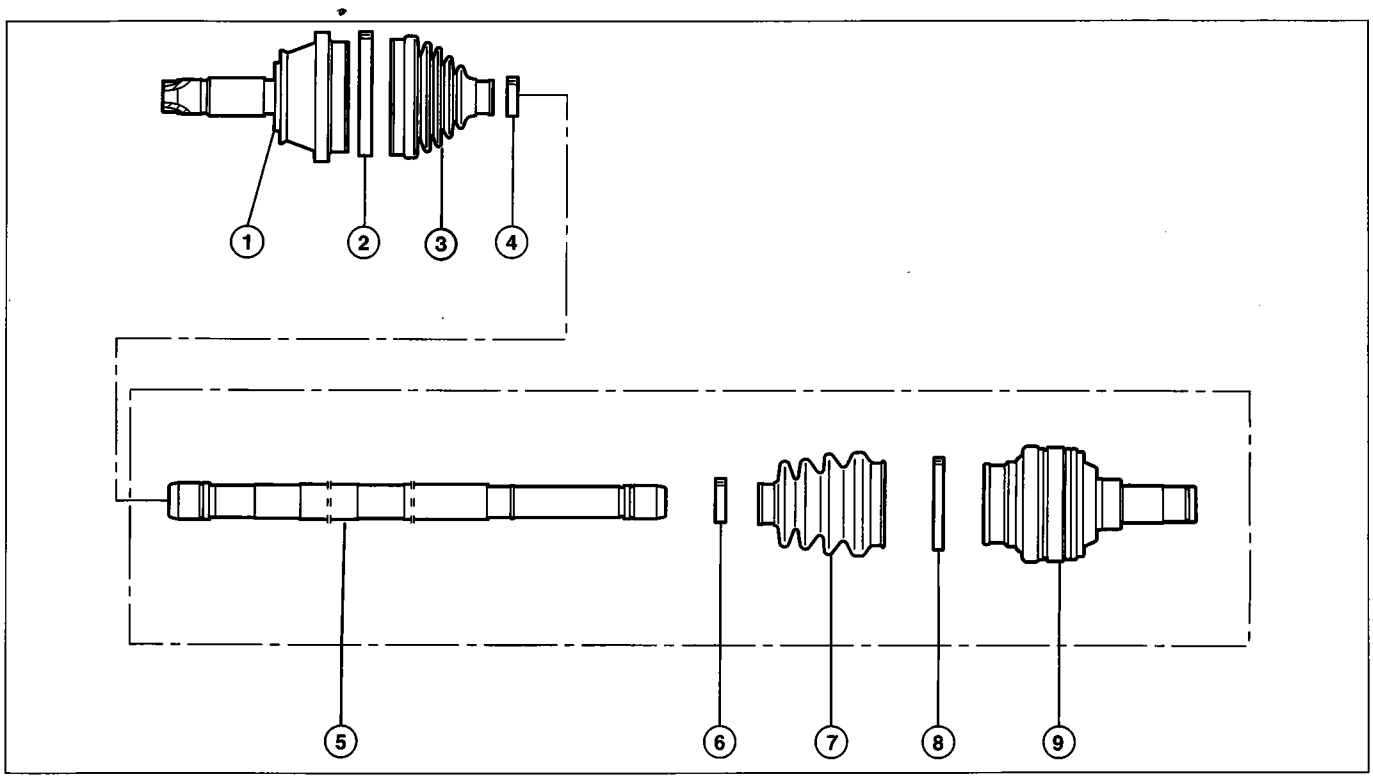

P4F66AB01

1. Constant velocity joint
2-4. Clips retaining constant velocity joint protective gaiter
3. Constant velocity joint protective gaiter
5. Drive shaft
6-8. Clip retaining sliding joint protective gaiter (gearbox side)
7. Sliding joint protective gaiter (gearbox side)
9. Sliding joint

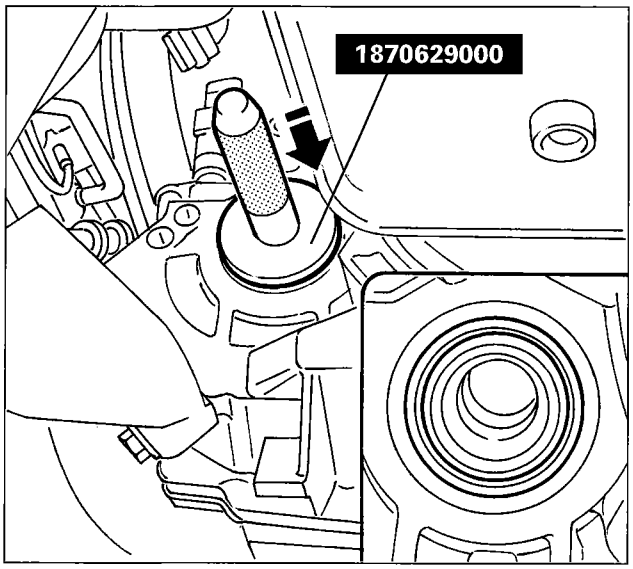

P4F67AB01

Replacing differential oil seal

Disconnect the drive shaft from the differential as described above, then remove the oil seal from the differential, using a screwdriver as a lever.
When refitting, use the drift 1870629000 with an appropriate handle.

Operate with care to avoid damaging the oil seal and causing leaks.

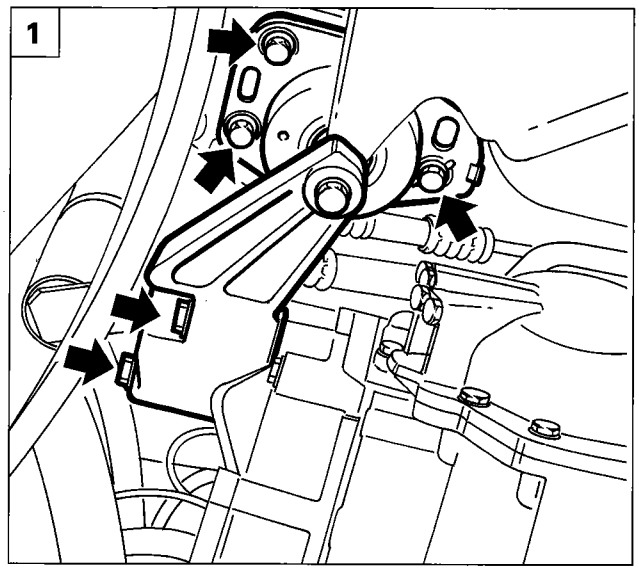

P4F59AB02

REMOVING-REFITTING VALVE ASSEMBLY

Place the car on ramps, disconnect the battery's negative pole, drain the gearbox oil, then proceed as described below, working from under the vehicle:

1. Place a hydraulic jack under the bellhousing, then remove the power unit mounting on the gearbox side to allow the valve assembly cover to be removed.
2. Undo the bolts securing the valve assembly cover and remove the cover.
3. Disconnect the valve assembly solenoid supply connectors, disengage the gearbox oil temperature sensor (1) from its mounting bracket and move the wiring aside.

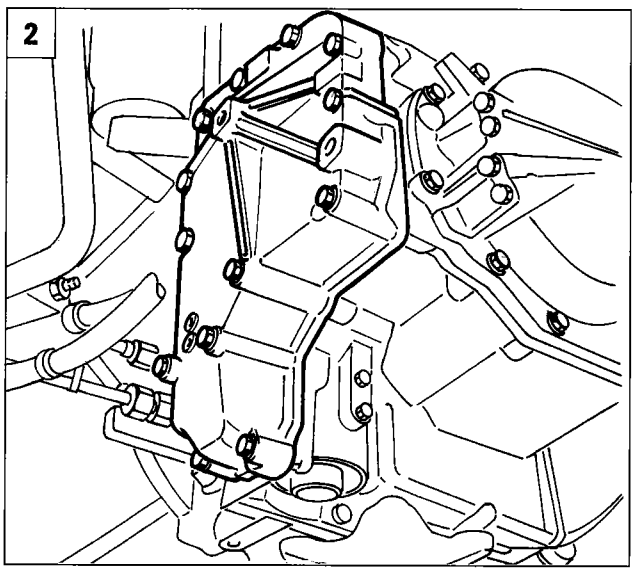

P4F67AB02

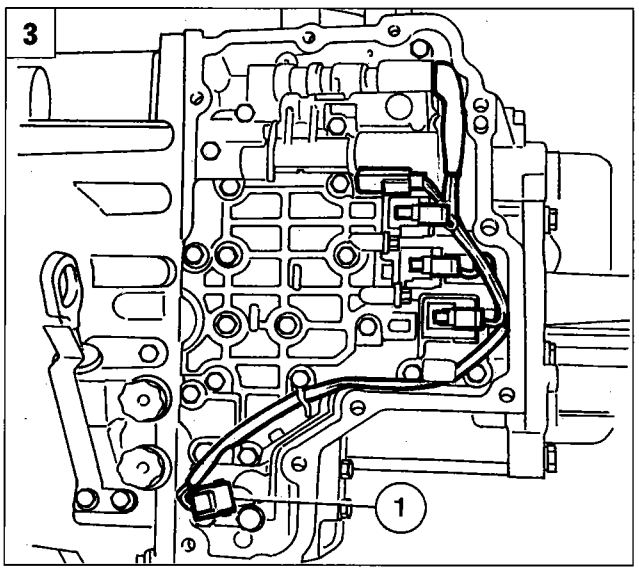

P4F67AB03

21-27.

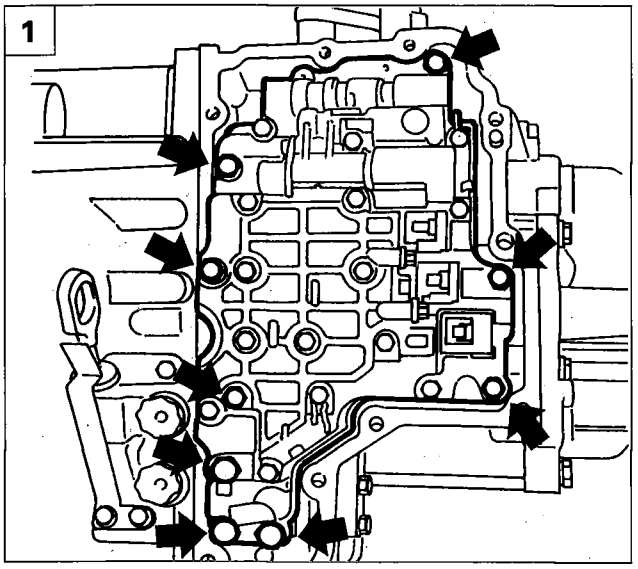

P4F68AB01

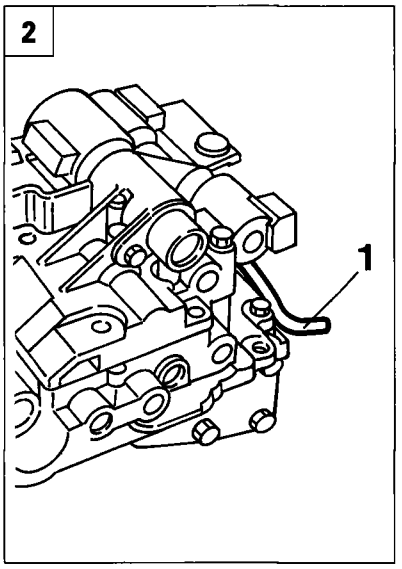

P4F68AB02

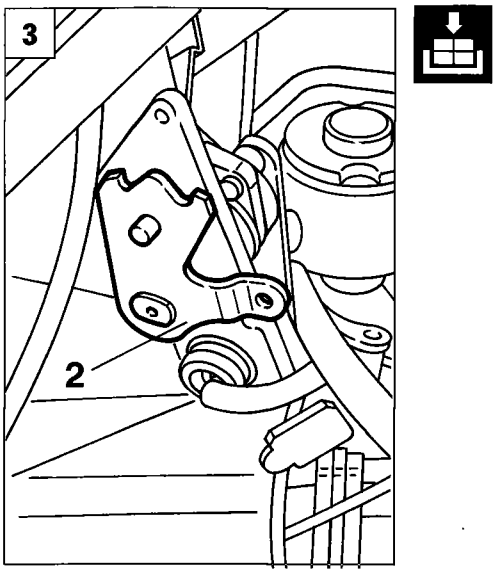

P4F68AB03

1. Undo the bolts shown in the figure securing the valve assembly, then remove the complete assembly.

Refitting

2-3. Insert the lever (1) of the selector valve in the hole of the lever (2).

4. Position the valve assembly and tighten the fixing bolts. Connect the solenoid supply connectors and fit the gearbox oil temperature sensor on the mounting bracket.

The valve assembly bolts are of different lengths. Arrange the bolts as shown in the figure.

5. Using solvent, clean off any sealant residues from the valve assembly cover. Apply a bead of silicone sealant 1-1.5 mm thick along the edge of the cover, cleaning off any surplus inside the cover.

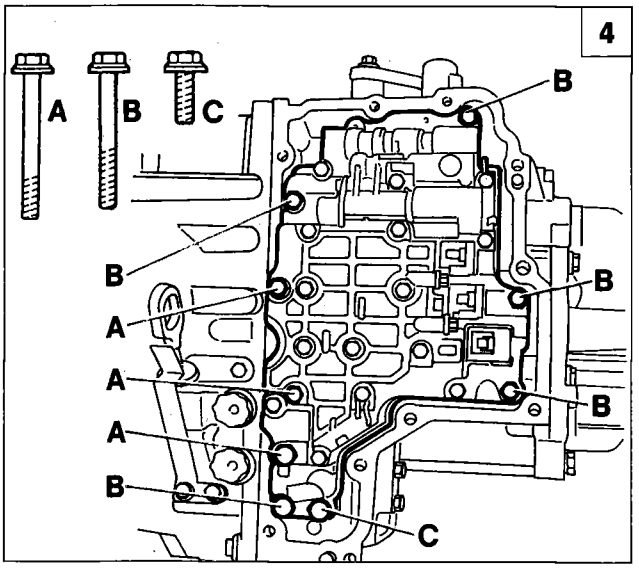

P4F68AB04

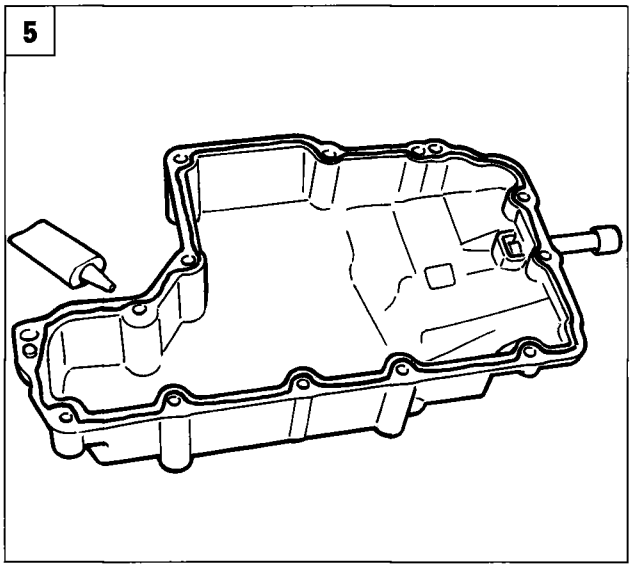

P4F68AB05

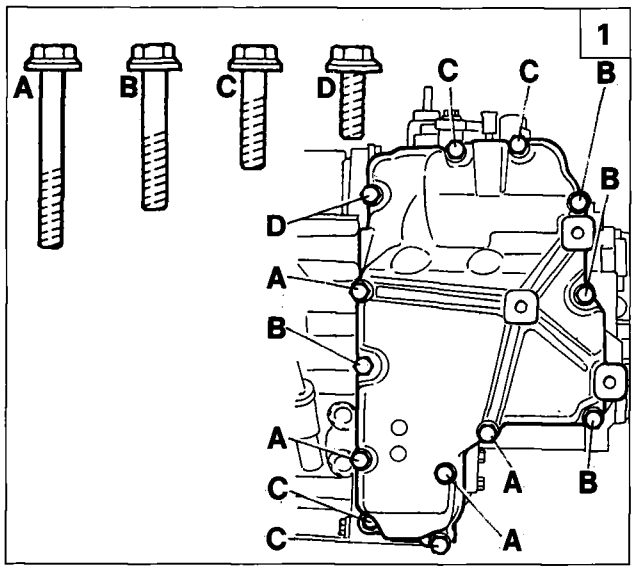

P4F69AB01

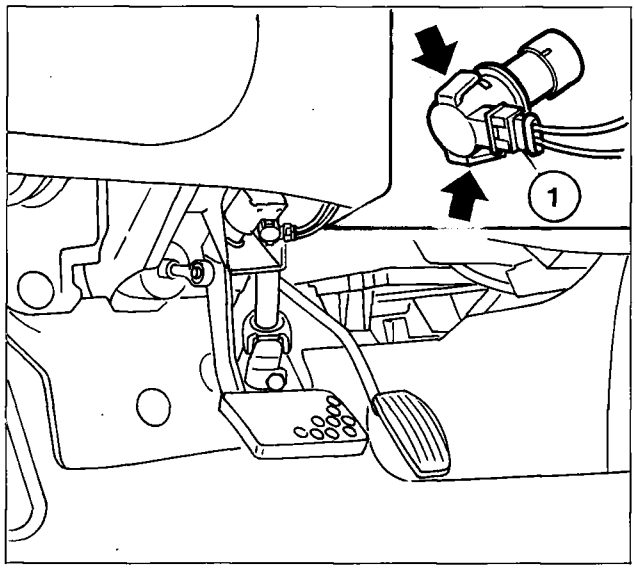

P4F69AB02

1. Fit the valve assembly cover and tighten the bolts.

The bolts securing the valve assembly cover are of different lengths. Arrange the bolts as shown in the figure and tighten them to a torque of 1.96 - 2.74 daNm.

NOTE *Fit the gearbox oil drain plug and tighten to a torque of 2.35-5.49 daNm. Top up the oil level, then check that there are no oil leaks from the valve assembly cover or drain plug.*

Finish refitting the valve assembly by reversing the procedure for removal.

KICK-DOWN SWITCH

The kick-down switch is located on the accelerator pedal. To remove this switch, release the lugs which secure the switch to the mounting bracket. Disconnect the supply connector (1), then replace the switch.

It is virtually essential to replace the kick-down switch if it is removed, as the retaining lugs could break during removal.

page

- Diagram showing hydraulic operation of brakes (front - disc and rear - drum) and mechanical operation of hand-brake 1

HYDRAULIC OPERATION

- Brake pedal 2
- Brake fluid reservoir 2
- Brake pump 3
- Brake servo 4
- Vacuum pump 8

FRONT BRAKES

- Removing-refitting 9
- Brake caliper 10
- Brake discs 11
- Brake pads 12
- Bleeding 13

REAR BRAKES

- Drum brakes 14
- Brake drums 17
- Self-adjusting device for recovering clearance between shoes and drum 18
- Shoes 19
- Shoe cylinder 19
- Bleeding 20
- Diagram showing hydraulic operation of brakes (front and rear - disc) and mechanical operation of handbrake 21
- Disc brakes 22
- Brake caliper 23
- Automatic device for adjusting clearance between rear brake pads and discs and handbrake 25
- Brake discs 26
- Brake pads 27
- Load proportioning valve 28
- Handbrake 30

page

ANTI-LOCK BRAKES A.B.S.Lucas "Down Sized"

- Composition 32
- Operating principles 33
- Components 34
- Diagram and description of operation of anti-lock brakes 40
- Wiring diagram for A.B.S. Lucas "Down Sized" 46
- Fault diagnosis 48
- Precautions to be observed on vehicles fitted with anti-lock brakes 48
- Precautions to be observed during repair operations involving anti-lock braking system components 48
- Removing-refitting anti-lock braking system components 49

Copyright by Fiat Auto

DIAGRAM SHOWING HYDRAULIC OPERATION OF BRAKES (FRONT - DISC AND REAR - DRUM) AND MECHANICAL OPERATION OF HANDBRAKE

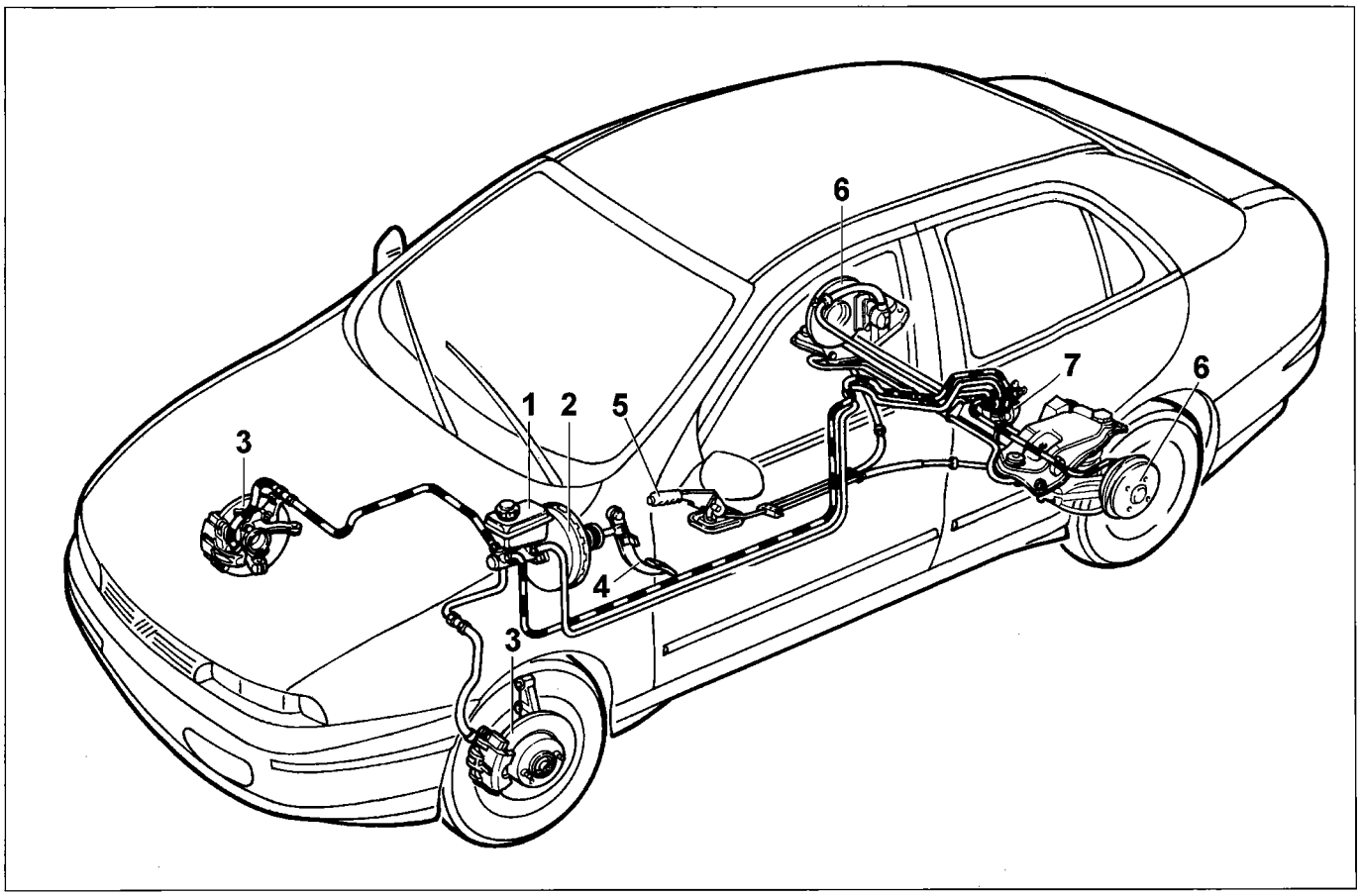

P4F001D01

1. Brake fluid reservoir and pump for independent braking circuits
2. Vacuum servo brake
3. Front disc brakes
4. Brake pedal
5. Handbrake lever
6. Rear drum brakes
7. Load proportioning valve (or regulator for 1370 12v)

Copyright by Fiat Auto

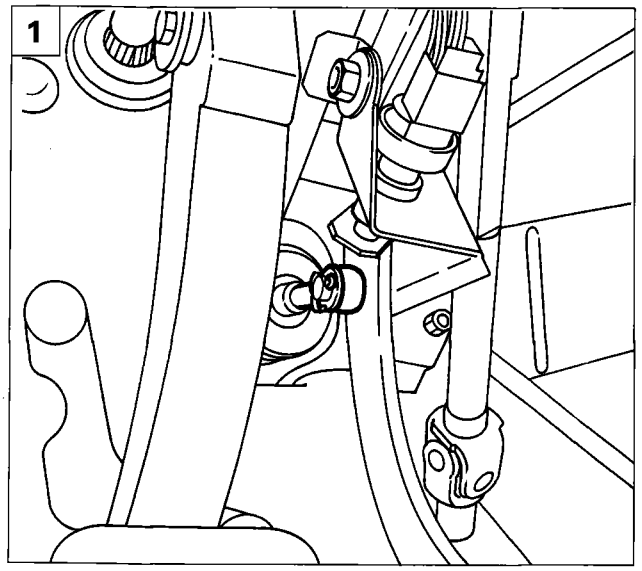

P4F002D01

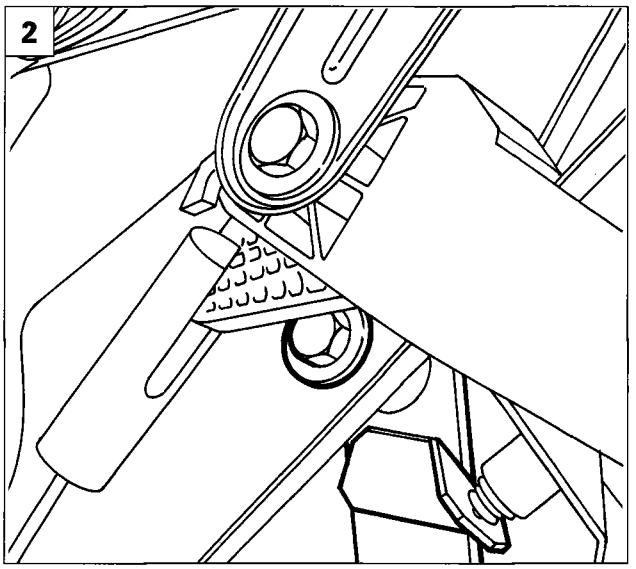

P4F002D02

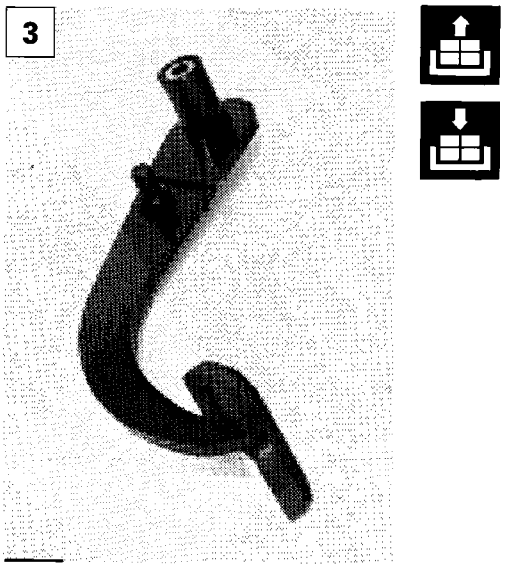

P4F002D03

BRAKE PEDAL

Removing-refitting

Proceed with removing the brake pedal carrying out the following operations:

1. Remove the split pin and remove the brake servo push rod from the pin on the brake pedal.

2-3. Lift up the clutch pedal, undo the bolt shown in the diagram fixing the brake pedal, then remove it.

NOTE *To refit the brake pedal, reverse the order of the operations described for its removal.*

the parts concerned with grease before fitting.

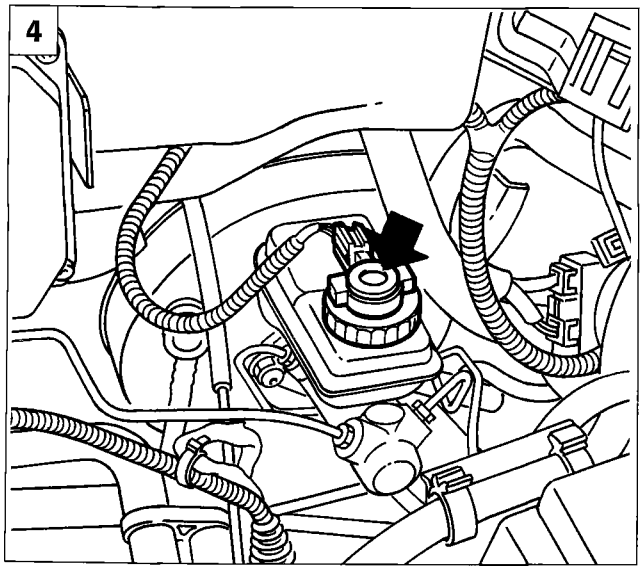

P4F002D04

BRAKE FLUID RESERVOIR

4. Check the operation of the device signalling insufficient brake fluid level.

NOTE *Periodically check the operation of the warning light, pressing on the top of the reservoir cover (as shown by the arrow); with the ignition key in the ON position, the brake fluid warning light should come on.*

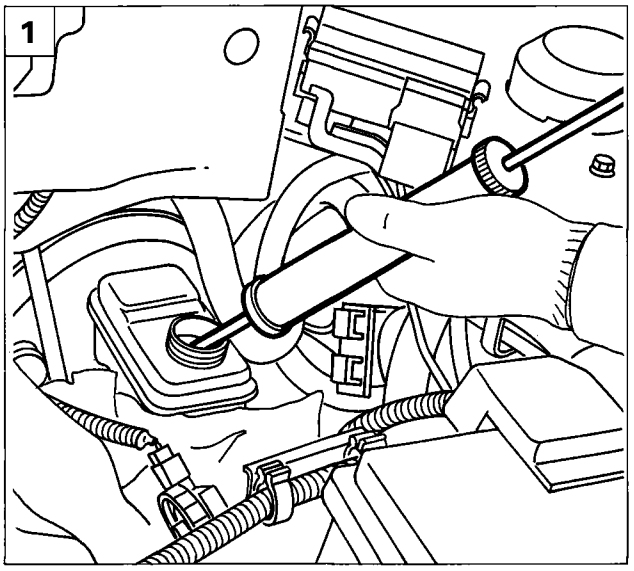

P4F003D01

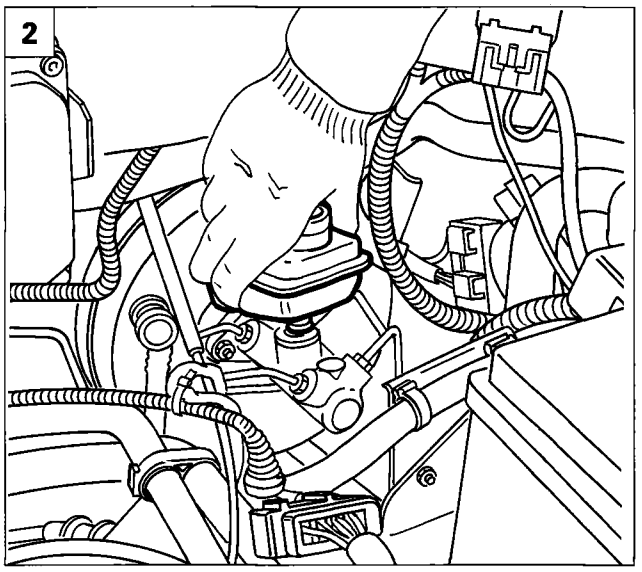

P4F003D02

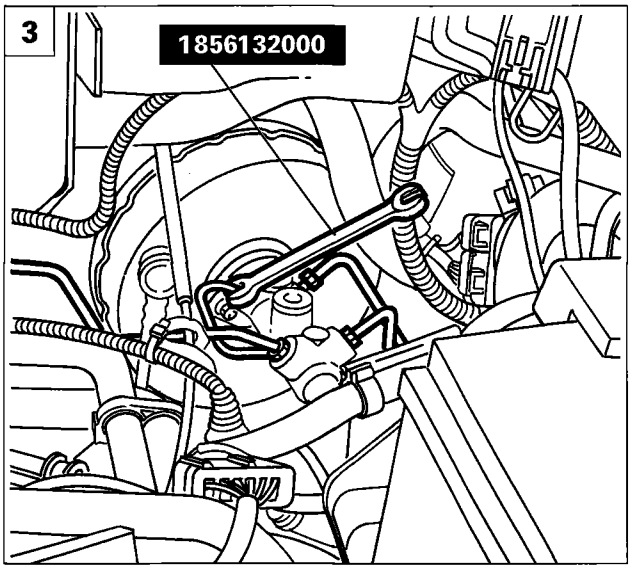

P4F003D03

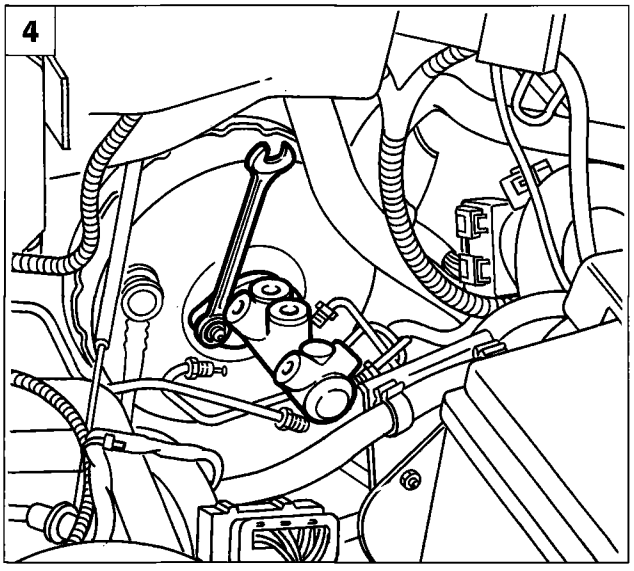

P4F003D04

Removing-refitting

Proceed with removing the brake fluid reservoir by carrying out the following operations:

1. Disconnect the connector for the brake fluid warning light, undo the reservoir cap, then drain the fluid using a special syringe.
2. Remove the tank extracting it upwards.

Take care in case the fluid remaining in the reservoir comes out.

NOTE *To refit the brake fluid reservoir, reverse the order of the operations described for the removal.*

Before refilling the reservoir, make sure that it is scrupulously clean.

Bleeding air from hydraulic system

BRAKE PUMP

Removing-refitting (for 8" brake servo)

Proceed with the removal of the brake pump by carrying out the following operations

3. Undo the connectors for the brake pipes using spanner 1856132000, in order not to damage the actual connectors.
4. Undo the fixing nuts and remove the brake pump.

Bleed braking system

Copyright by Fiat Auto

1

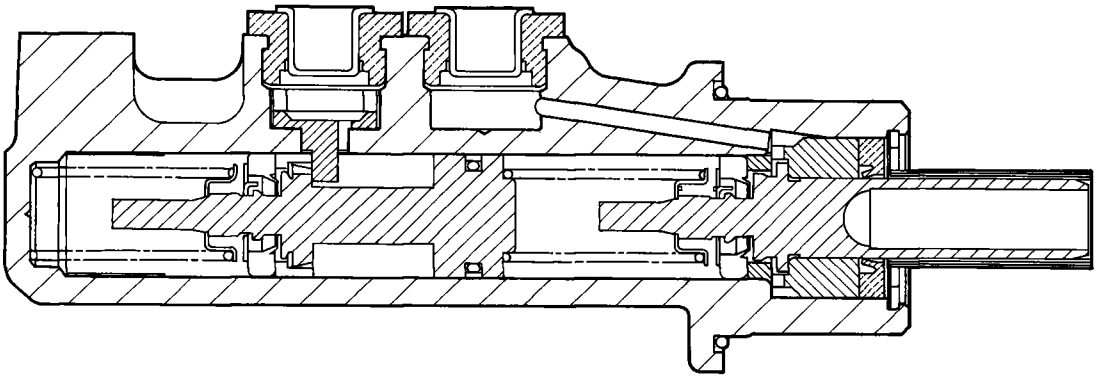

P4F004D01

2

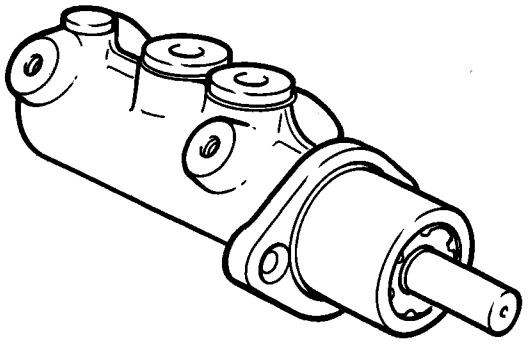

P4F004D02

Dismantling-reassembling

1. Longitudinal section of brake pump
2. When overhauling replace the seals; if there are traces of abrasion or seizing on the pump casing, replace the complete brake pump.

BRAKE SERVO

3. Brake servo fitted on vehicle.
4. Check the recess of the hydraulic push rod using a depth gauge.

NOTE *The adjustment of the brake servo is carried out via the adjustment screw located on the end of the rod. in the rest position the end of the adjustment screw should be 22.45 - 22.65 mm recessed in relation to the plane of the front cover (8" brake servo only). The 8"+7" brake servo is inseparable from the brake pump.*

3

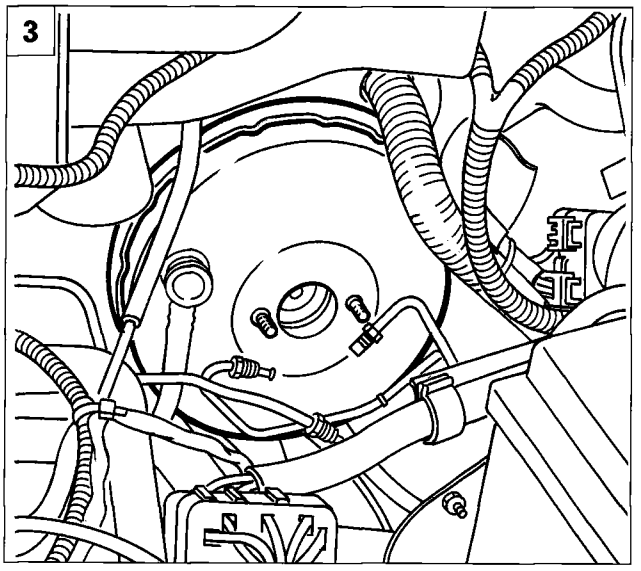

P4F004D03

4

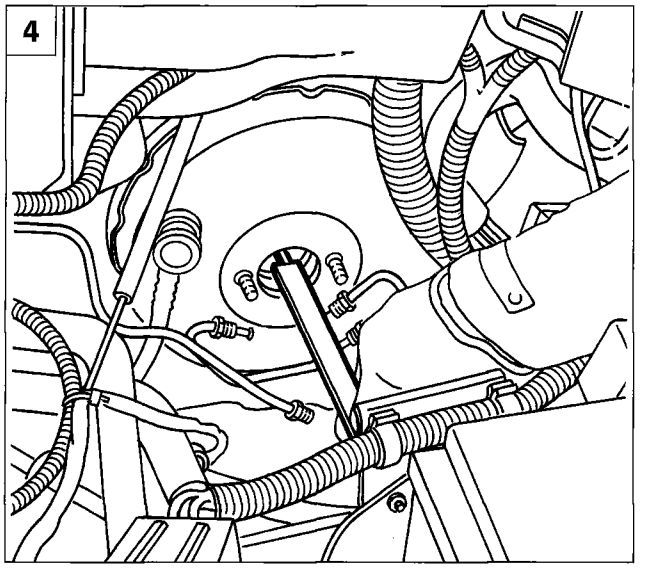

P4F004D04

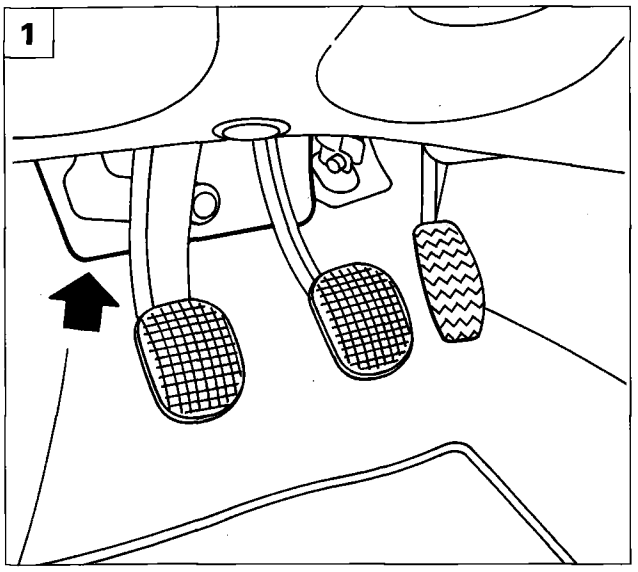

P4F005D01

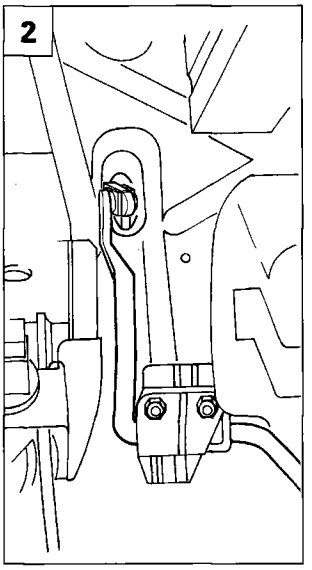

P4F005D02

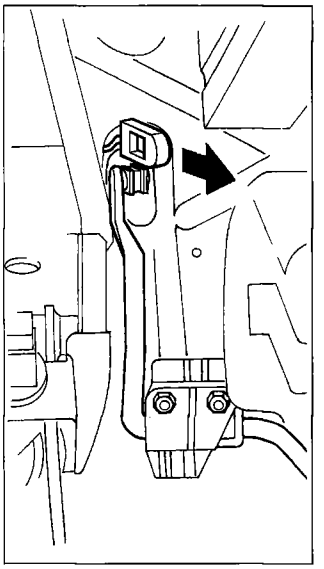

P4F005D03

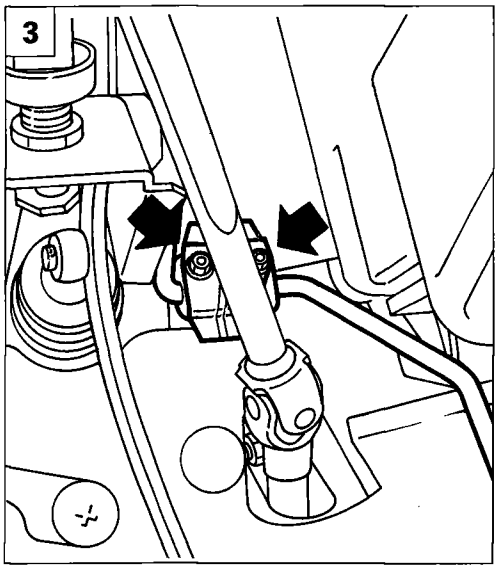

P4F005D04

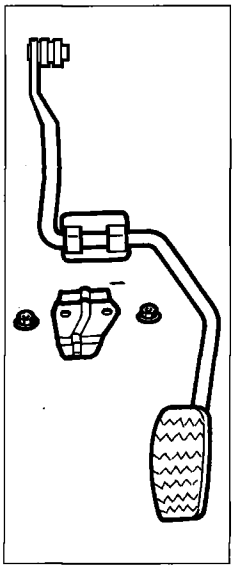

P4F005D05

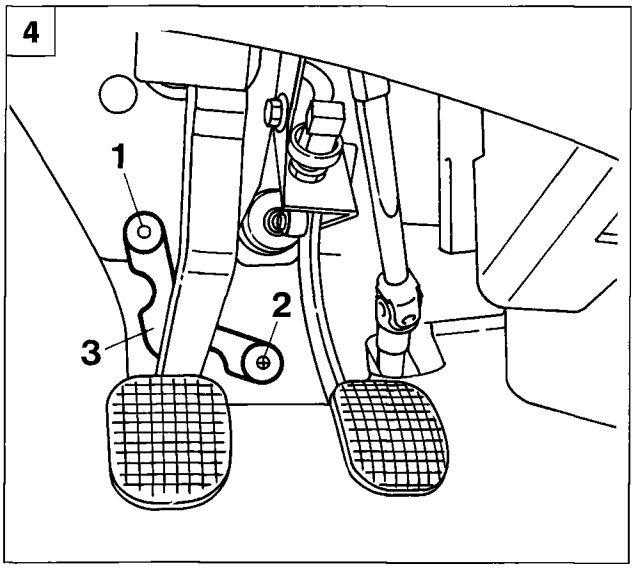

P4F005D06

Removing-refitting

Proceed with the removal of the brake servo by carrying out the following operations:

1. The arrow indicates the sound-proofing plate. The accelerator pedal must be removed to facilitate the removal because the fixing plate rests on the actual sound-proofing plate.
2. Release the accelerator cable from the relevant pedal.
3. Undo the nuts shown in the diagram and remove the fixing plate and the accelerator pedal.
4. Remove the fixing buttons (1) and (2) for the sound-proofing plate.

NOTE *The button (1) cannot be reused, therefore when refitting, after having positioned the plate (3), a new button must be used*

The sound-proofing plate does definitely not have to be removed, but simply moved towards the right to allow access to the brake servo fixing nuts.

Copyright by Fiat Auto

33.

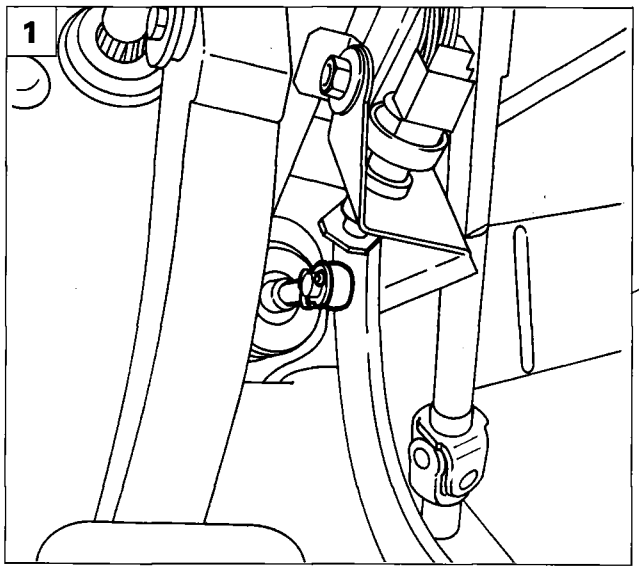

P4F006D01

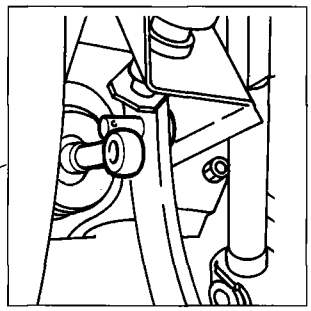

P4F006D02

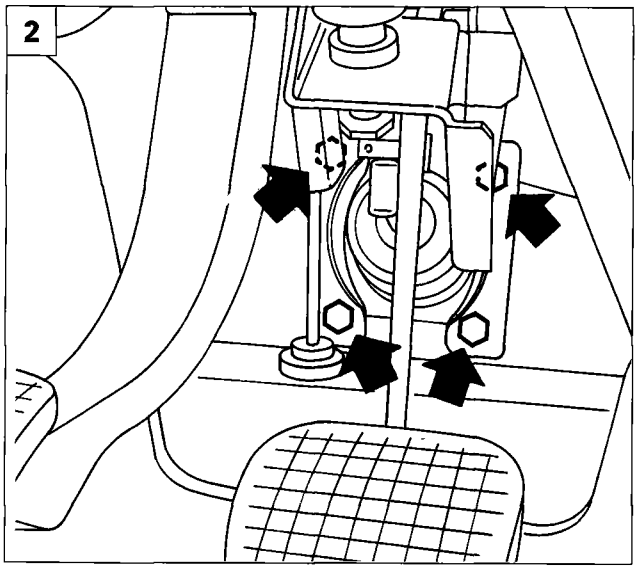

P4F006D03

1. Extract the retaining split pin to release the brake servo push rod from the pin on the pedal.
2. Undo the nuts fixing the brake servo (shown by the arrows) to the pedals support.
3. Disconnect the connector for the brake fluid warning light, remove the cap, drain the fluid and extract the reservoir.
4. Undo the nuts fixing the brake pump to the brake servo. Extract the brake pump from the brake servo and place it in the engine compartment to allow the removing-refitting of the brake servo.

When carrying out this operation, take care not to damage the brake pipes.

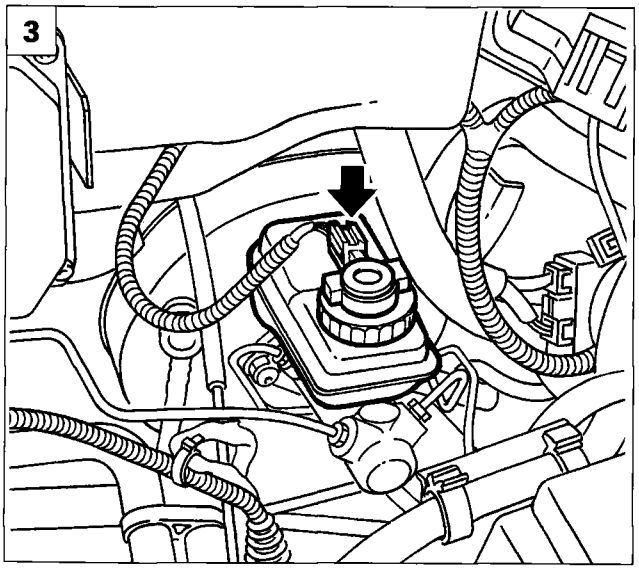

P4F006D04

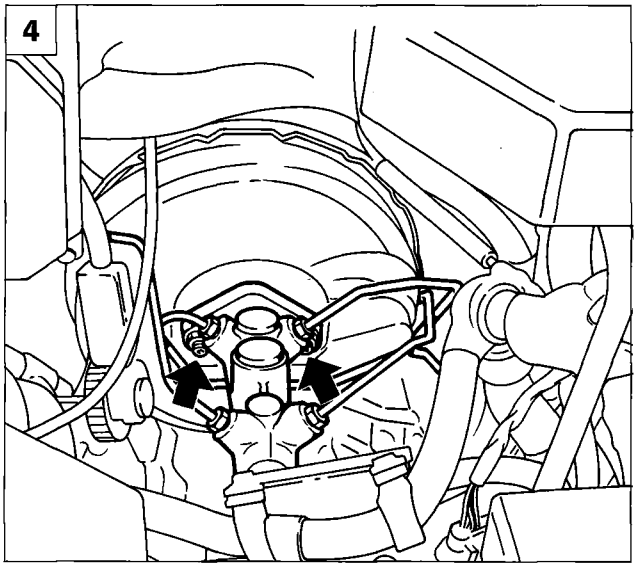

P4F006D05

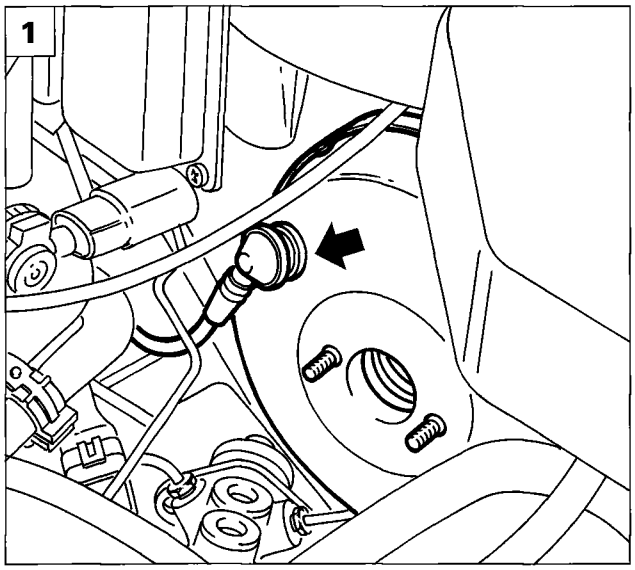

P4F007D01

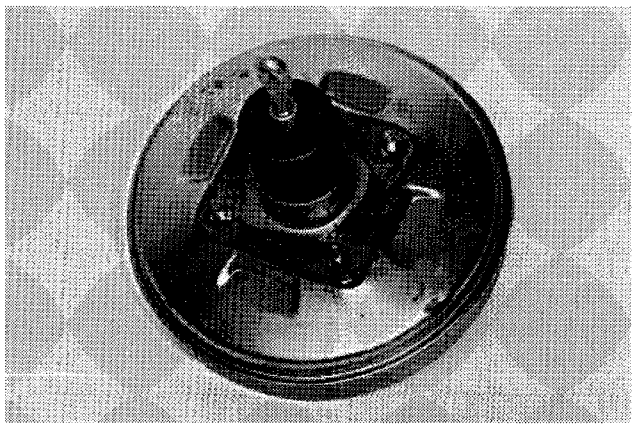

P4F007D02

1. Disconnect the vacuum intake pipe (shown by the arrow) and extract the brake servo from the engine compartment.

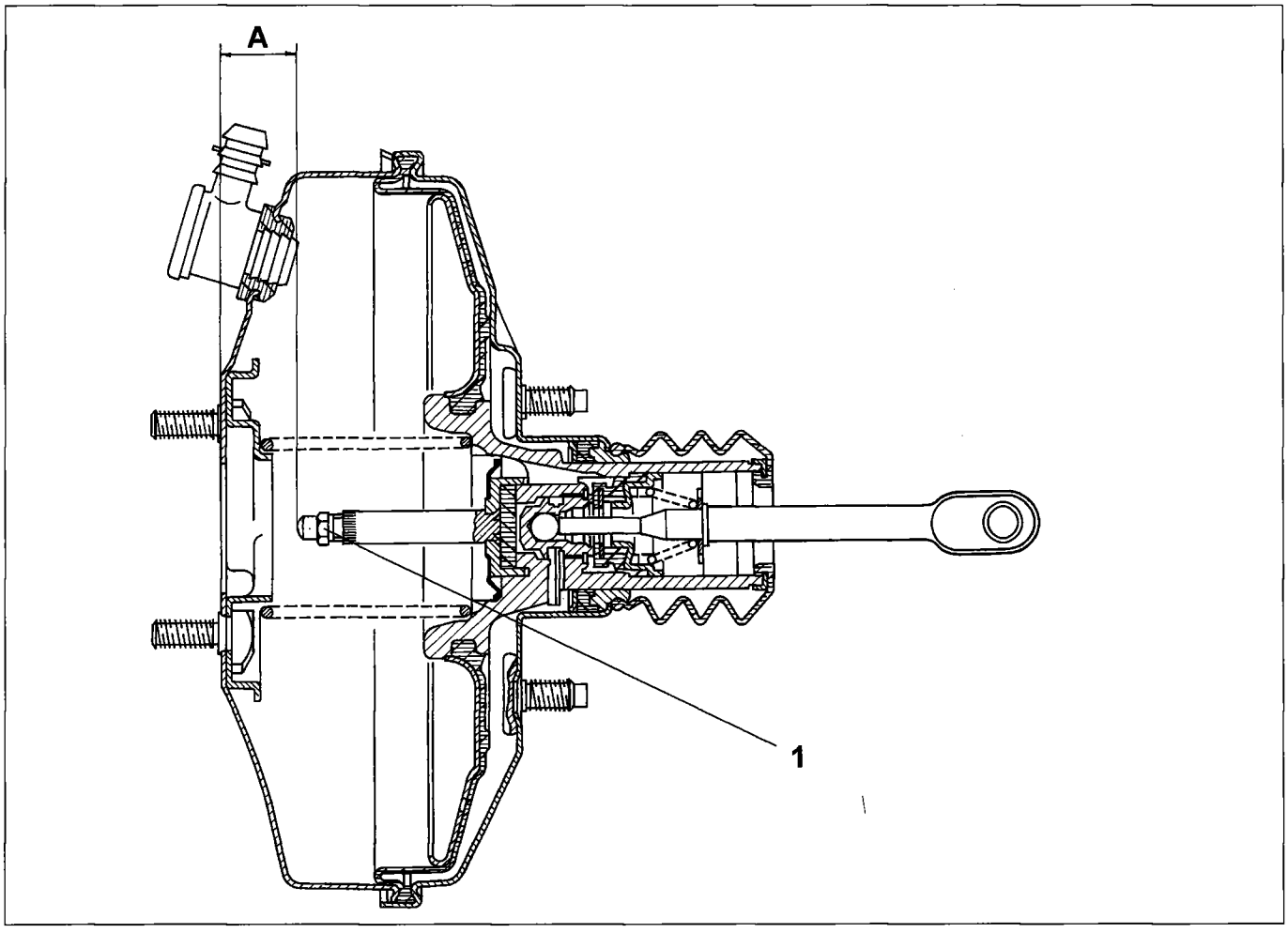

P4F007D03

Longitudinal section of Bendix 8" brake servo

Distance of hydraulic piston push rod from brake pump support plate:
A = 22,45 ÷ 22,65 mm (Bendix 8" brake servo only)

If necessary, act on the nut (1) to adjust the brake servo.
NOTE: The 8"+7" brake servo is inseparable from the brake pump.

Copyright by Fiat Auto

VACUUM PUMP

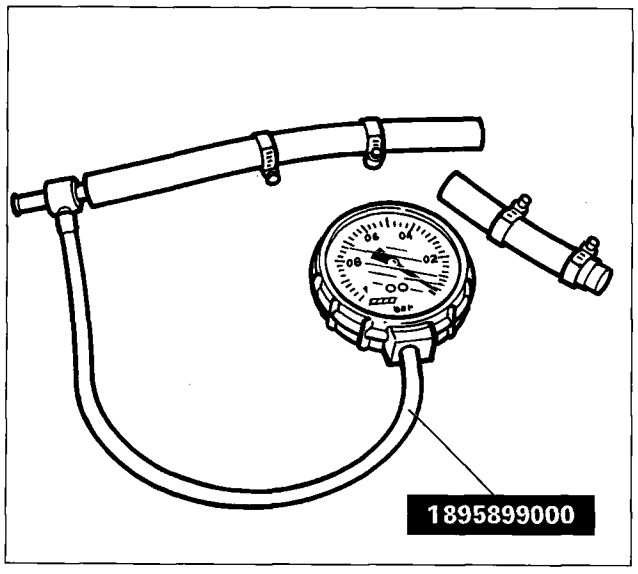

P4F008D01

Vacuum gauge with connectors for checking operation of vacuum pump

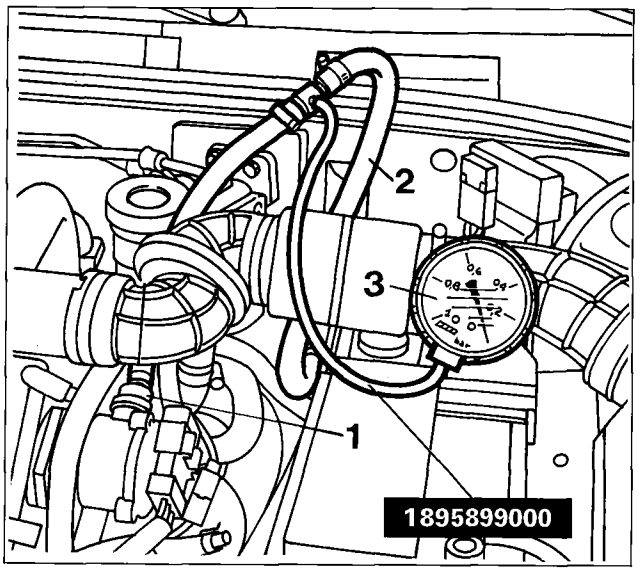

P4F008D02

Checking operating faults

In the case of irregularities in the operation of the braking system, before replacing the vacuum pump, completely check the vacuum circuit, as follows:

- with the engine switched off, completely drain the brake vacuum circuit by repeatedly fully depressing the brake pedal;
- fit the vacuum gauge 1895899000 (3) between the one-way valve, on the vacuum gauge (1), and the pipe (2) connected to the brake servo (as illustrated in the diagram at the side);
- start up the engine; 20 seconds later (with the engine idling), the reading on the vacuum gauge (3) should be more than 0.6 bar.

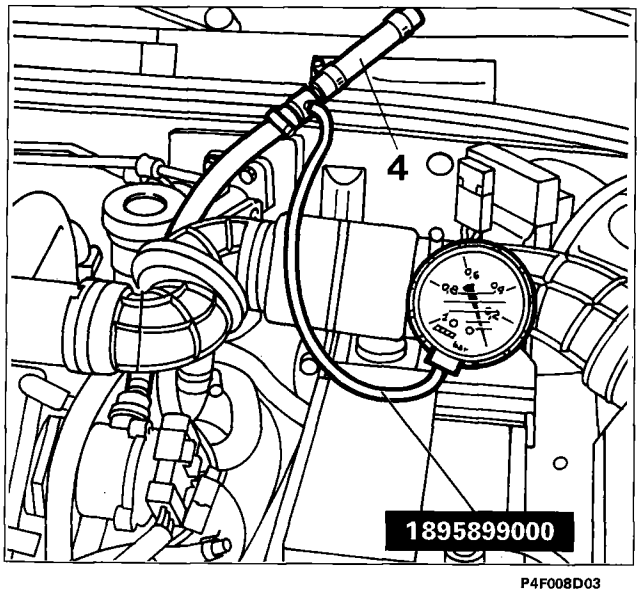

P4F008D03

If the vacuum is less than 0.6 bar, then the pipe (2) connected to the brake servo must be disconnected from the vacuum gauge and the special cap (4) fitted on the free filler.
Start up the engine again; 20 seconds later (with the engine idling) the reading on the vacuum gauge should be morethan 0.6 bar.
If this is the case, the fault should be sought in the air circuit or the brake servo.
If this is not the case, the vacuum gauge is faulty and therefore it should be replaced.

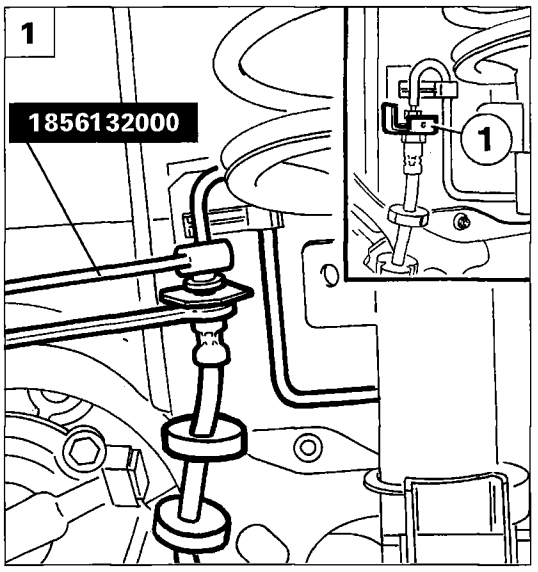

P4F009D01

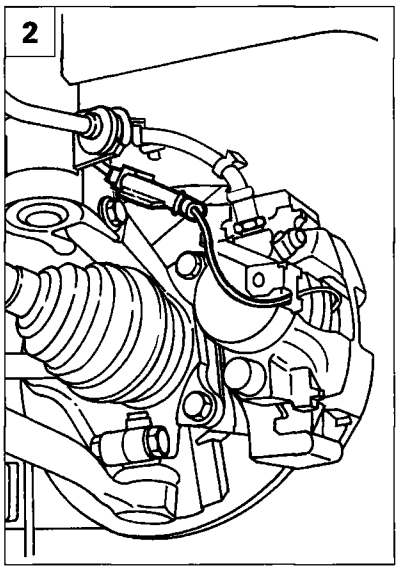

P4F009D02

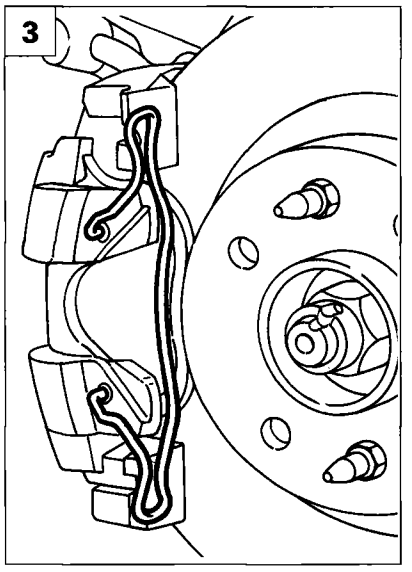

P4F009D03

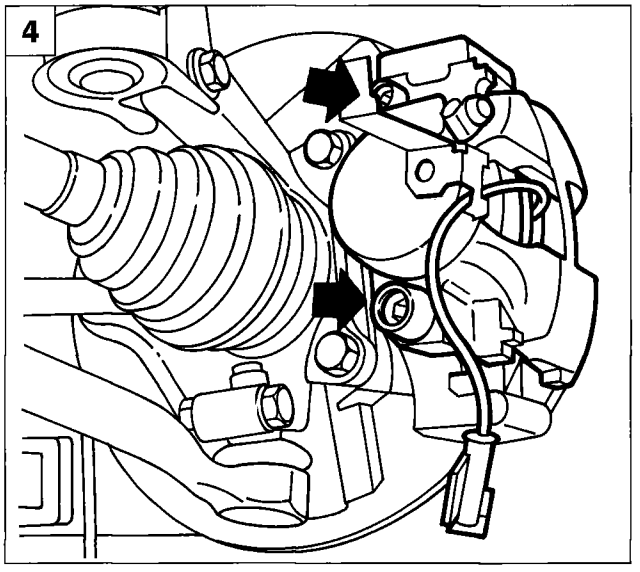

P4F009D04

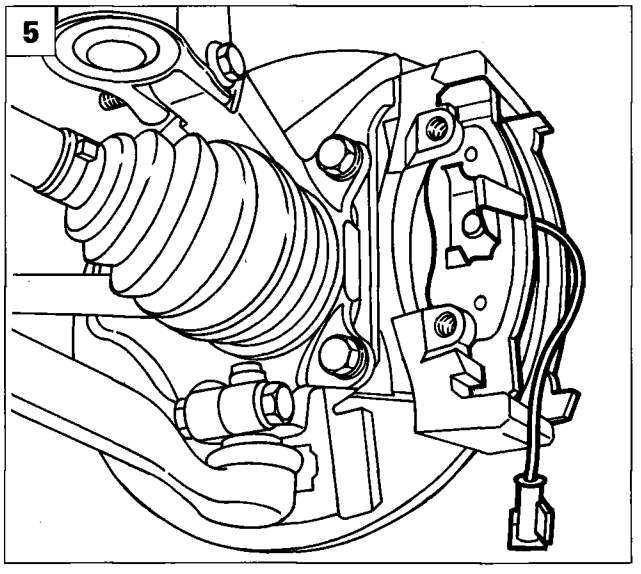

P4F009D05

REMOVING-REFITTING

Remove the braking system components as described below:

1-2. Extract the clip (1), disconnect the flexible pipe acting on the unions using spanner 1856132000; disconnect the connector for the brake pad wear sensor.

NOTE *The flexible pipe should not be inflated or cracked or else it must be replaced.*

When fitting the flexible pipe it is necessary to check that the fixing seal is correctly positioned to prevent the pipe coming into contact with the wheel arch or with mechanical parts of the vehicle in any travel or steering conditions of the wheels.

3. Remove the spring retaining the caliper casing to the mounting bracket.
4. Undo the bolts fixing the brake caliper (after after removed the protective seals) to the mounting bracket.

The bolts fixing the caliper casing are self-locking and should always be replaced each time they are undone or loosened.

5. Remove the brake pads.

Copyright by Fiat Auto

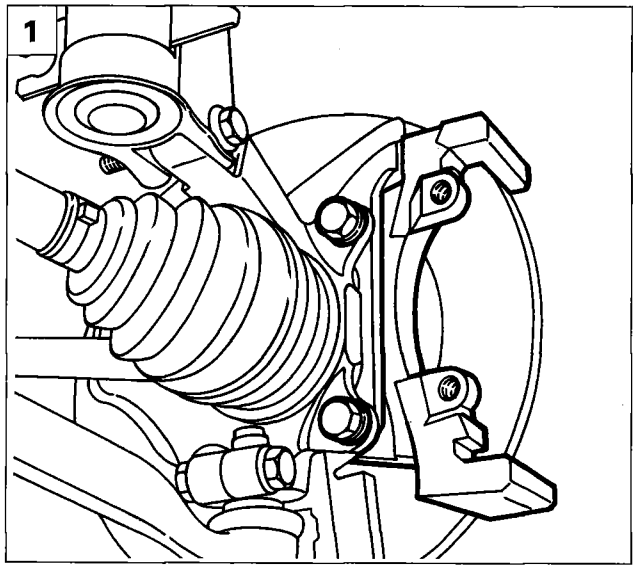

P4F010D01

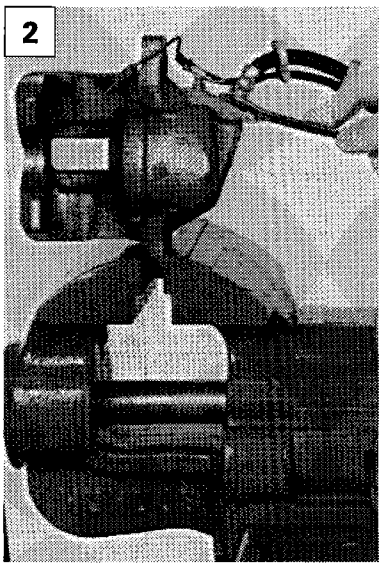

P4F010D02

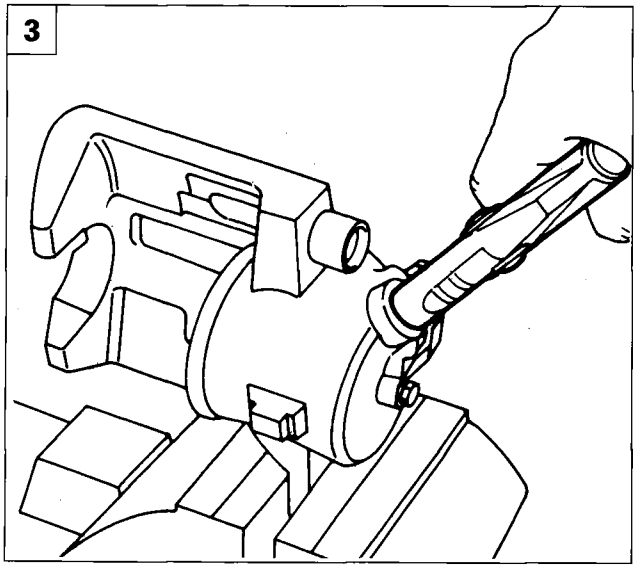

P4F010D03

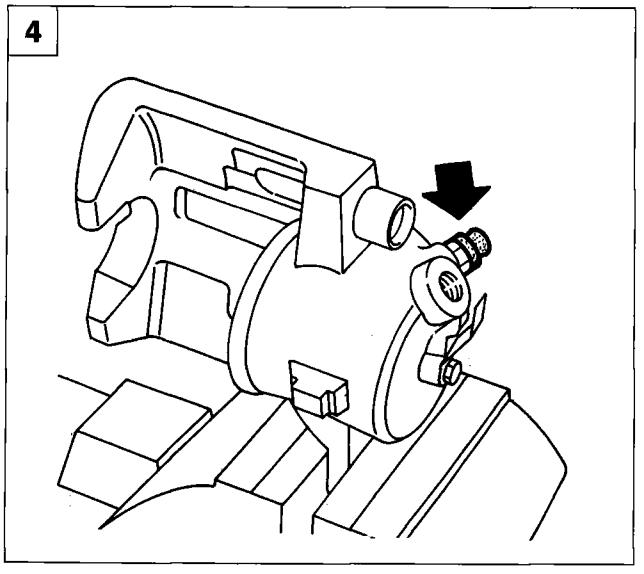

P4F010D04

1. Undo the bolts fixing the brake caliper mounting bracket and remove it.

BRAKE CALIPER

Dismantling-reassembling

Position the caliper in the vice, using the special protection, then proceed as described below:

2. Remove the flexible connector from the caliper casing.
3. Direct a jet of compressed air into the brake fluid inlet opening to remove the piston from the caliper casing.

Direct a steady jet of compressed air to prevent the piston from being expelled forcibly from the caliper casing which might have adverse effects on it.

4. Undo the bleed screw and remove it.

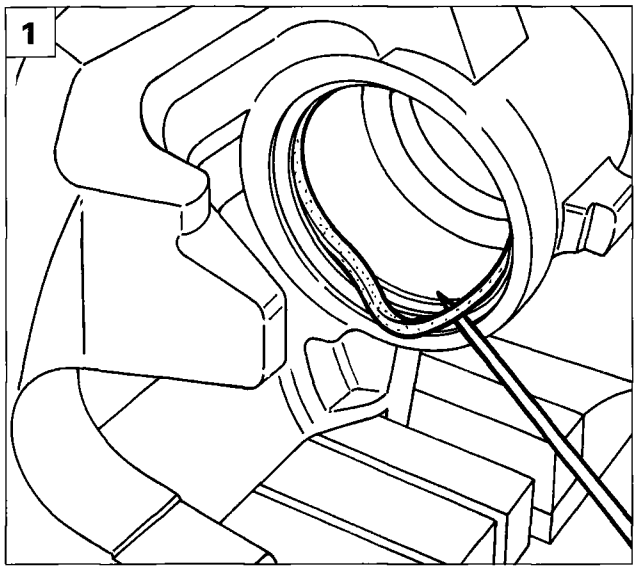

P4F011D01

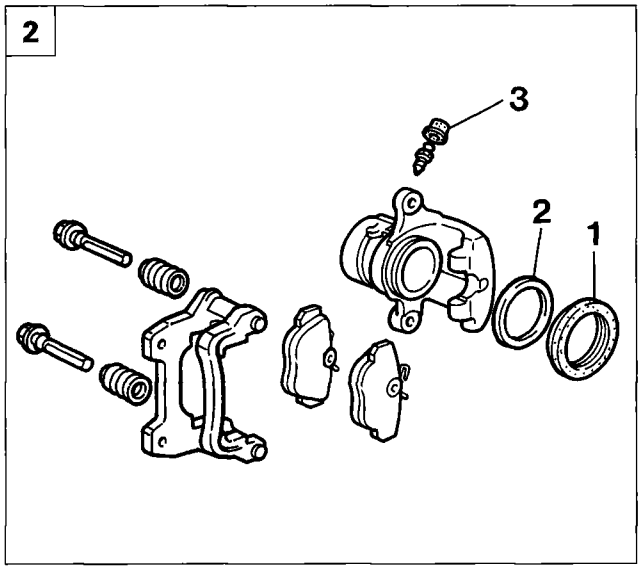

P4F011D02

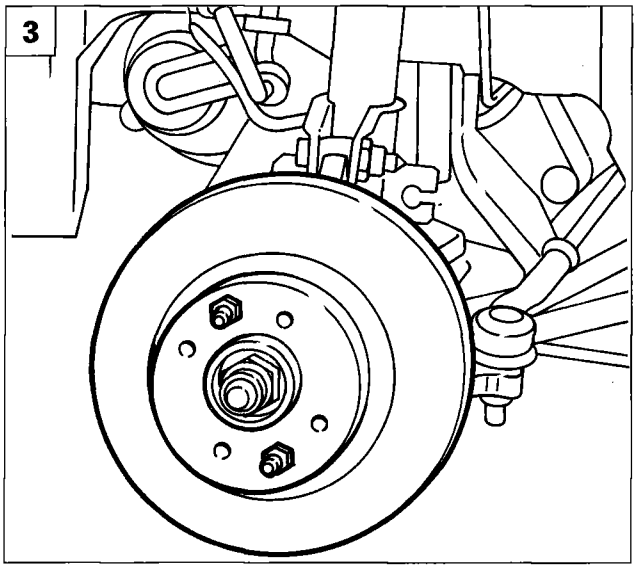

P4F011D03

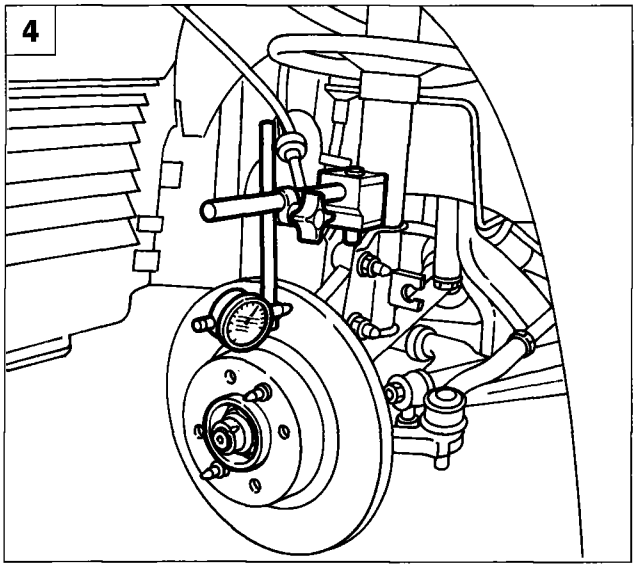

P4F011D04

1. Remove the lining.
2. Check the components; the piston and the caliper casing should not show signs of abrasion or seizing; if this is not the case, the caliper complete with piston must be replaced; in any case the protective boot (1) and the seal (2) must always be replaced and it is necessary to make sure that the bleed screw (3) is not obstructed.

Use a solution of hot water with FIAT LDC detergent to wash the metal components.

NOTE *When refitting the brake caliper, reverse the order of the operations described for the removal.*

the parts concerned before refitting with brake fluid

Before fitting the piston in the caliper casing, position the protective boot on the rear section. Fit the piston gradually taking care not to damage the protective boot.

BRAKE DISCS - Dismantling-reassembling

3. Undo the bolts fixing the brake disc and remove it; when refitting remove any traces of rust to ensure that the disc is perfectly perpendicular in relation to the hub.
4. Check that the disc is no more than 0.15 mm off centre (for ⌀ 257 mm discs) and 0.10 (for ⌀ 284 mm discs); this value is measured 2 mm from the outer diameter of the disc.

Copyright by Fiat Auto

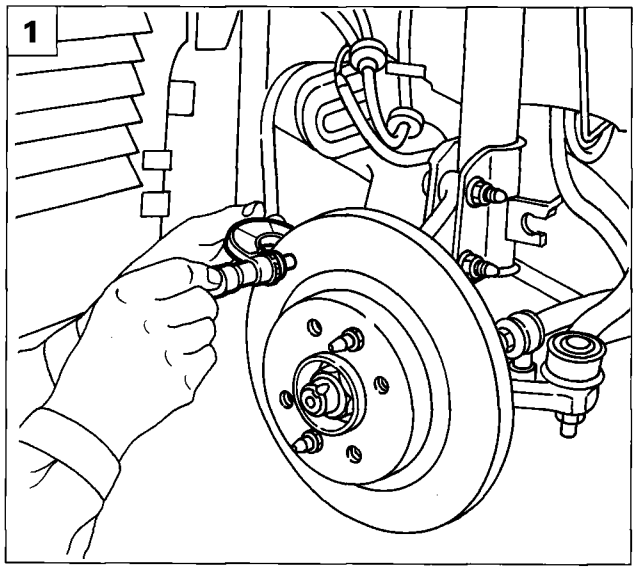

P4F012D01

1. Check the thickness of the brake disc. The minimum permissible thickness of the disc, after wear, is given in the table; if the value measured is less than the figure given in the table, then the disc should be replaced.
   In the case of deterioration or deep grooves, the surfaces of the brake disc should be skimmed using a grinder: when the operation is completed, the thickness of the brake disc should not be less thanthe figure given in the table.

Thickness of brake discs		1370 12v 1581 excluding CA 1910 TD*	1581 CA 1747 16v 1910 TD** 1370 12v Weekend 1580 16v Weekend 1747 16v Weekend 1910 TD** Weekend	1998 20v 2387 TD 1998 20v Weekend 2387 TD Weekend
Thickness of new brake disc	mm	11,8 ÷ 12,1	19,8 ÷ 20,1	21,8 ÷ 22,1
Minimum permissible thickness after wear	mm	10,20	18,20	20,20
Minimum permissible thickness after refacing	mm	10,55	18,55	20,55

* with mechanical pump ** with electronically controlled injection pump

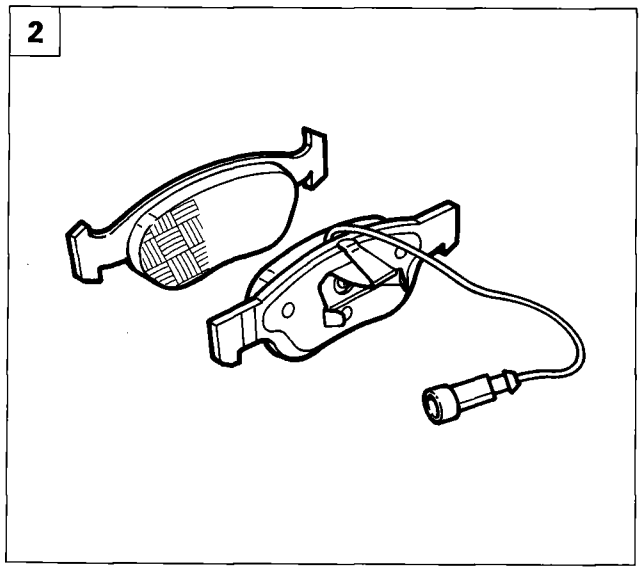

P4F012D02

BRAKE PADS

Check

2. The brake pads should be replaced if the thickness is less than 1.5 mm.

Check that the same type of brake pads are fitted on eachpair of wheels.

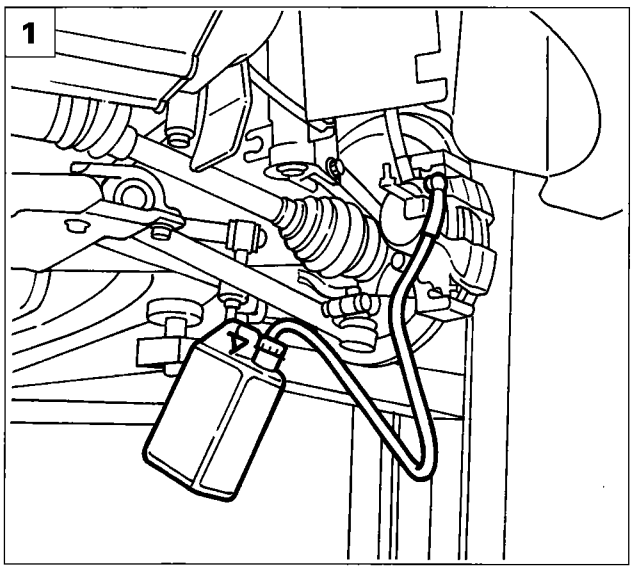

P4F013D01

Replacing brake pads

When replacing the brake pads, proceed as follows:

- disconnect the electrical connection for the brake pad wear sensor;
- remove the caliper casing retaining spring;
- undo the bolts fixing the caliper casing and replace the brake pads, without disconnecting the brake pipes.

The bolts fixing the brake caliper are self-locking and should be replaced each time they are undone or loosened.

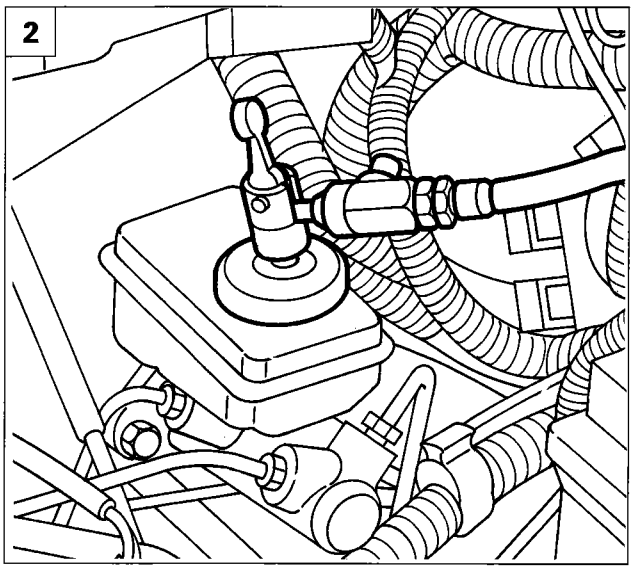

P4F013D02

BLEEDING

1. Manual bleeding.

The brake fluid recovered should not be reused.
The level should be topped using using new brake fluid.

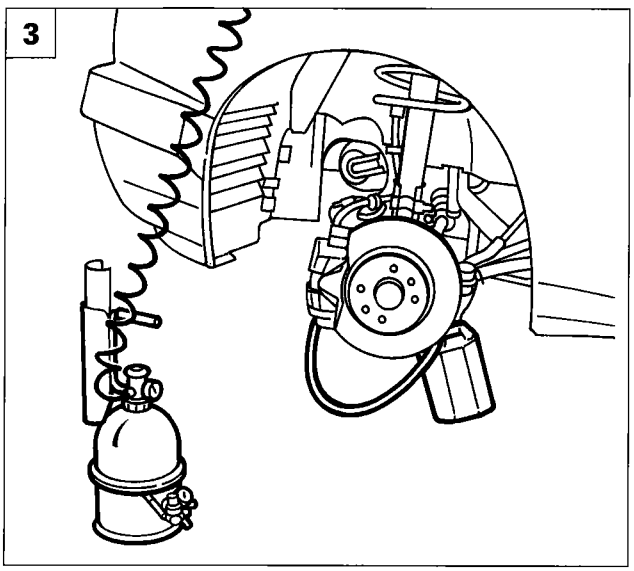

P4F013D03

Bleeding using Jollyfren equipment

2. Connect the pipe for the equipment to the brake fluid reservoir.
3. Connect the equipment to the compressed air jet and carry out the bleeding as described in the chart which comes with the equipment.

Copyright by Fiat Auto

33.

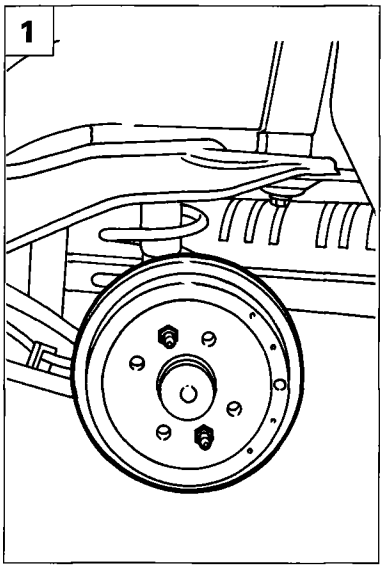

P4F014D01

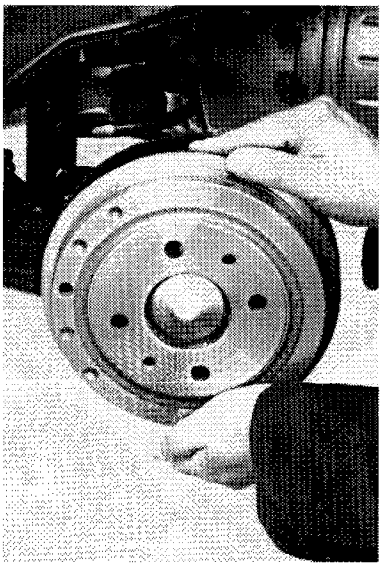

P4F014D02

DRUM BRAKES

1340 12v 1581 16v 1340 16v 1340 TD

Removing-refitting

Proceed with the removal of the rear drum brakes carrying out the following operations:

1. Undo the bolts fixing the brake drum and remove it.

NOTE *Before refitting the brake drum, remove any traces of rust from the contact surfaces.*

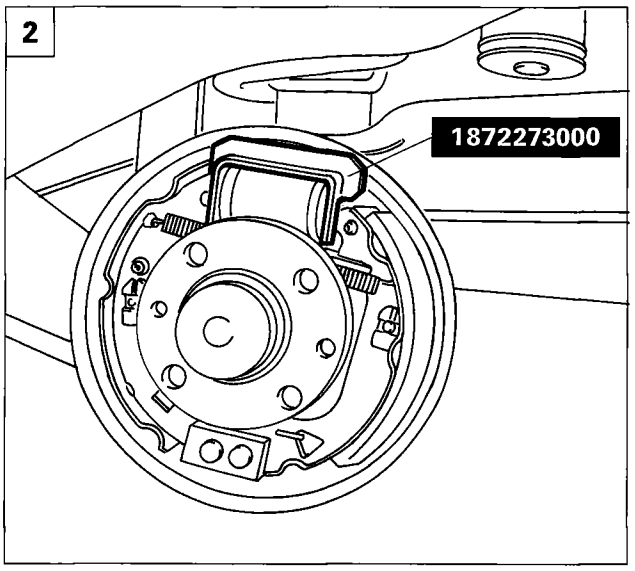

P4F014D03

2. Fit tool 1872273000 for retaining the brake cylinder piston to allow the removal and the refitting of the shoes.

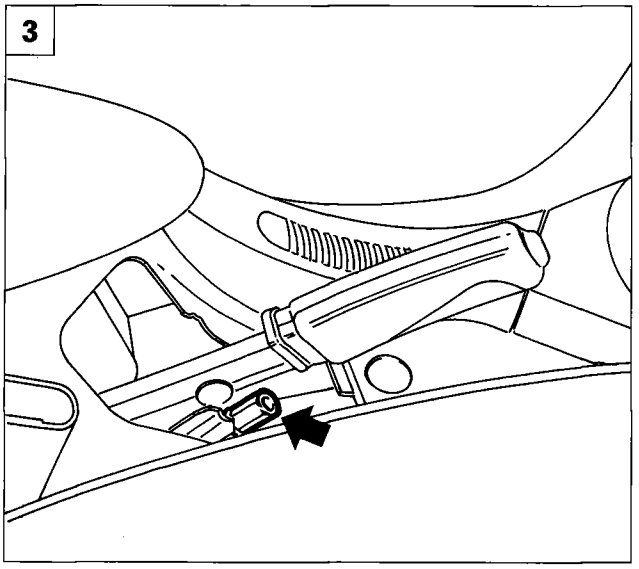

P4F014D04

3. Loosen the handbrake cable, after having removed the lever cover.

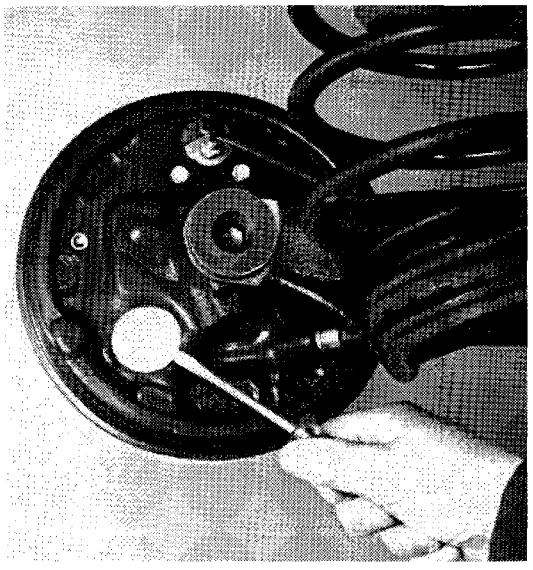

P4F015D01

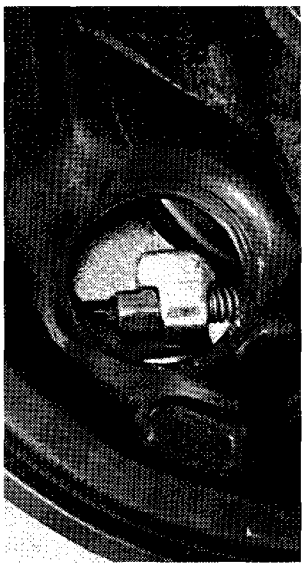

P4F015D02

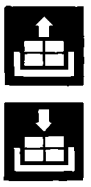

1. Remove the handbrake cable anchorage cover.

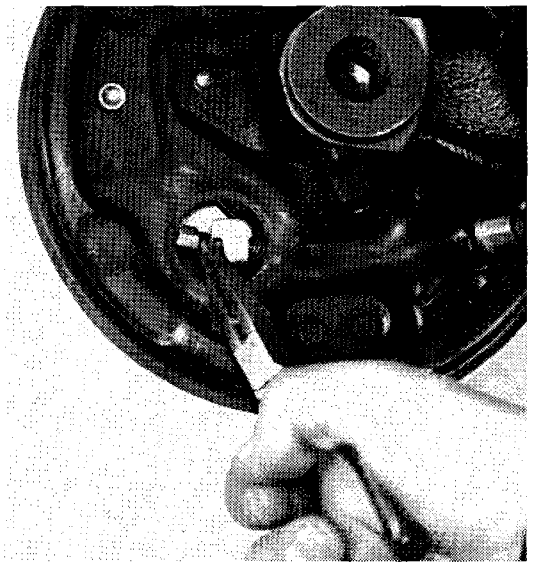

P4F015D03

P4F015D04

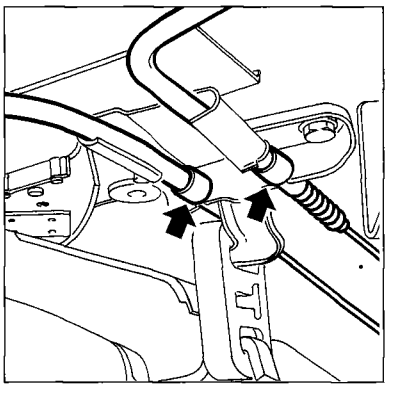

P4F015D05

2. Release the handbrake cable from the anchorage on the control lever. If the operation proves difficult, disconnect the cable at the point shownin the diagram.

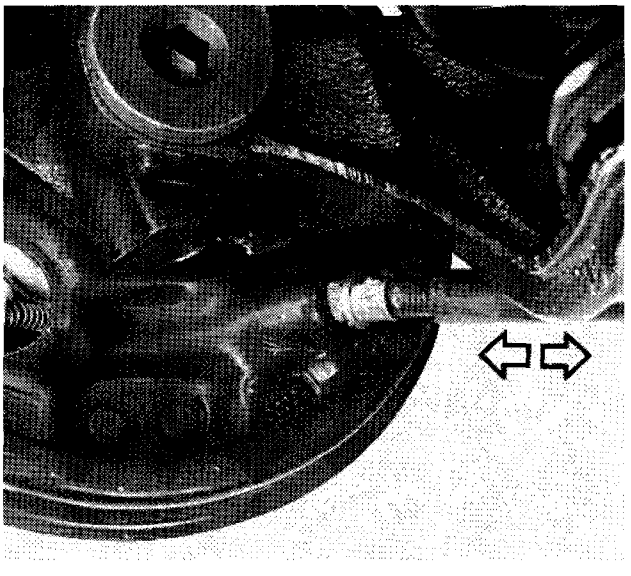

P4F015D06

3. Remove the outer casing for the hand-brake cable from the brake back plate.

33.

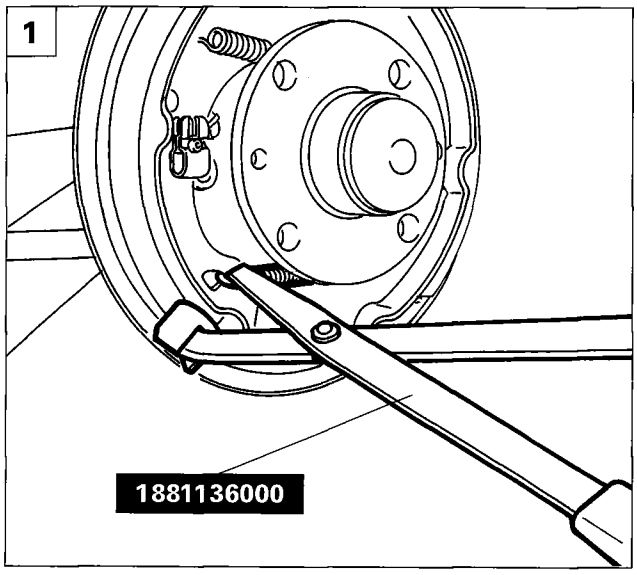

P4F016D01

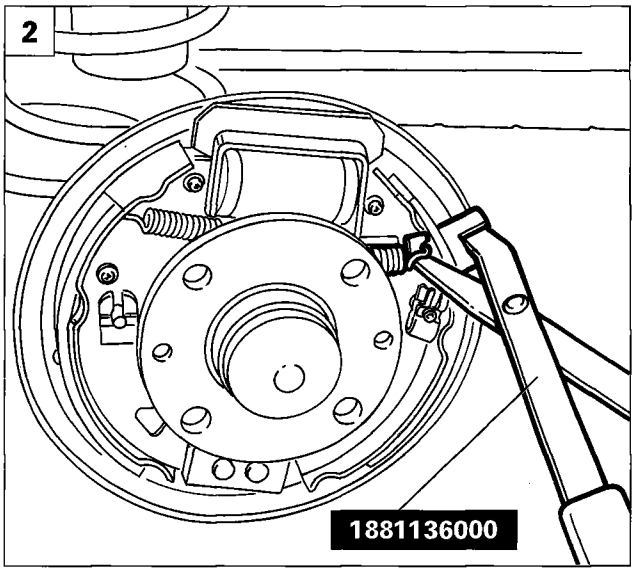

P4F016D02

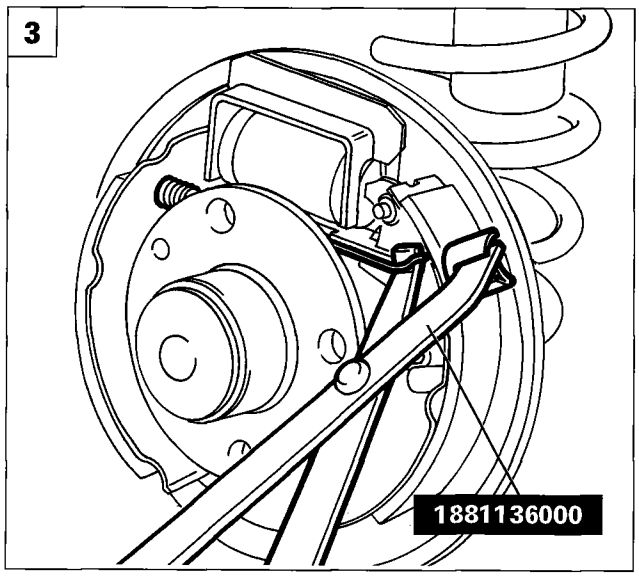

P4F016D03

1. Remove the lower shoe return spring using tool 1881136000.
2. Remove the (right) self-adjusting device return spring.
3. Remove the upper shoe return spring using tool 1881136000.
4. Extract the left shoe retaining pin after having removed the retaining clip.
5. Remove the left shoe with the self-adjusting device. Then repeat the operation for the right shoe.

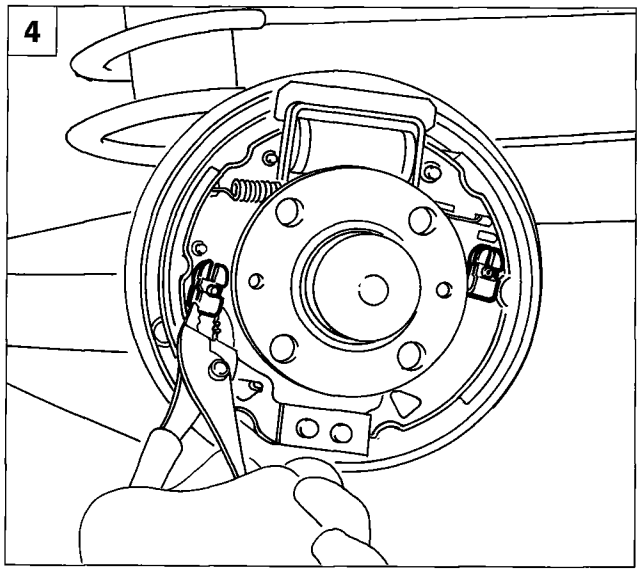

P4F016D04

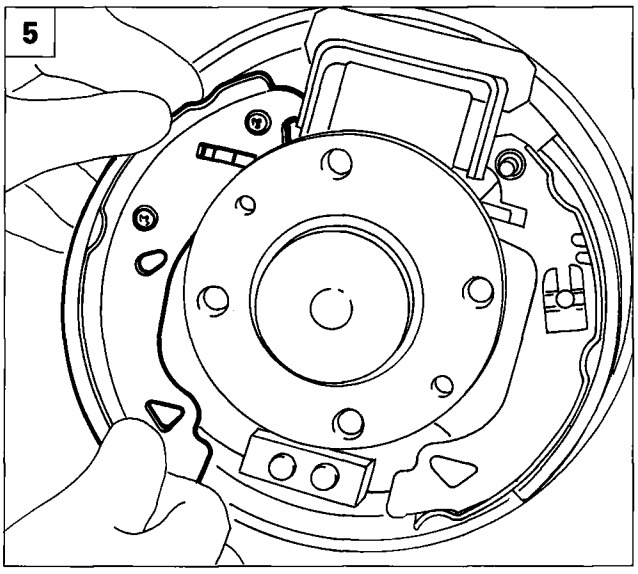

P4F016D05

1

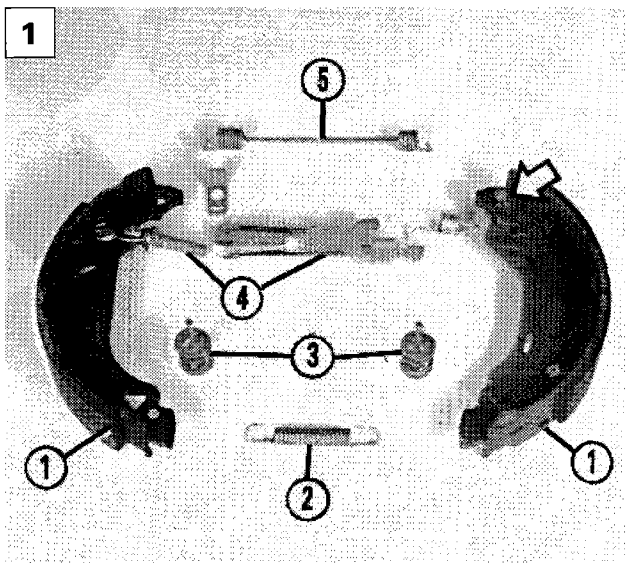

P4F017D01

1. Rear brake components:
   1. Shoes
   2. Lower brake shoe return spring
   3. Shoe retaining pins
   4. Self-adjusting device
   5. Upper shoe return spring

NOTE *The arrow indicates the washer-clip which should be replaced each time the shoes are replaced.*

2

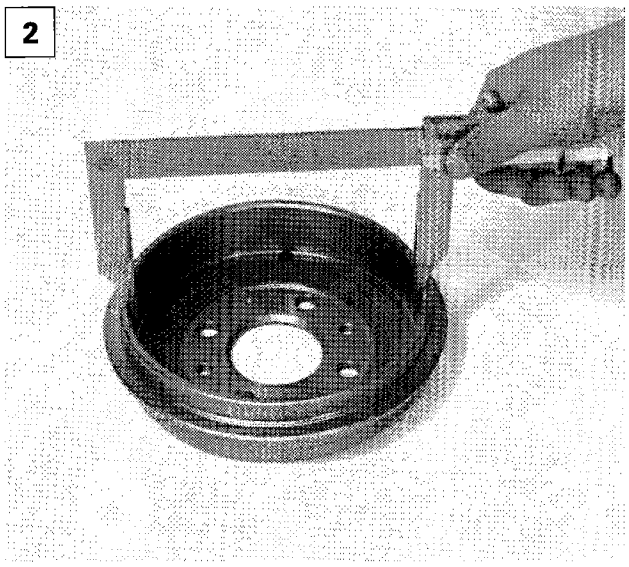

P4F017D02

BRAKE DRUMS

2. Check the diameter of the brake drum. The maximum permissible diameter for the brake drum after wear is given in the table; if the value is higher then the brake drum should be replaced.
   If the brake drums show signs of deep grooves or there is excessive wear, they should be skimmed; when the operation is completed the value of the diameter should not be higher than the figures given in the table.

Brake drum diameter		**1370 12v** **1581 16v** **1747 16v** **1910 TD** **1370 12v Weekend**	**1581 16v Weekend** **1747 16v Weekend** **1910 TD Weekend**
Drum diameter	mm	203,1 ÷ 203,4	228 ÷ 228,6
Max permissible diameter after wear	mm	204,7	230
Max permissible diameter after skimming	mm	204,2	229,50

Copyright by Fiat Auto

33.

SELF-ADJUSTING DEVICE FOR RECOVERING CLEARANCE BETWEEN SHOES AND DRUM

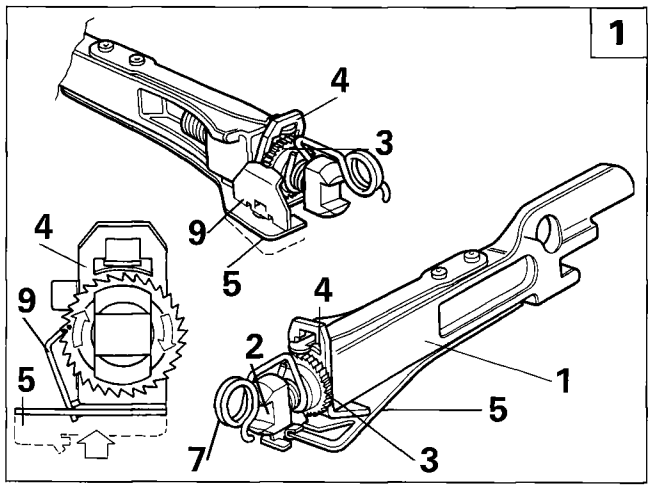

P4F018D01

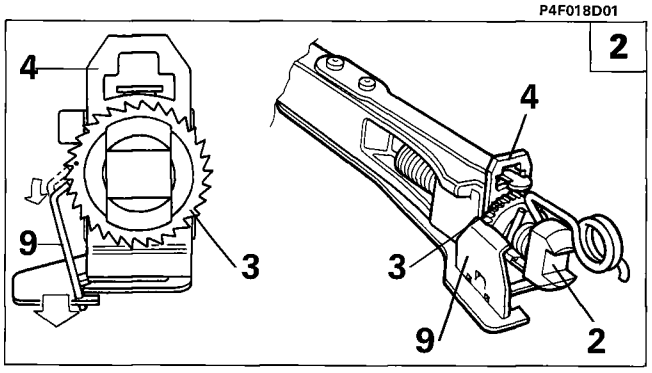

P4F018D03

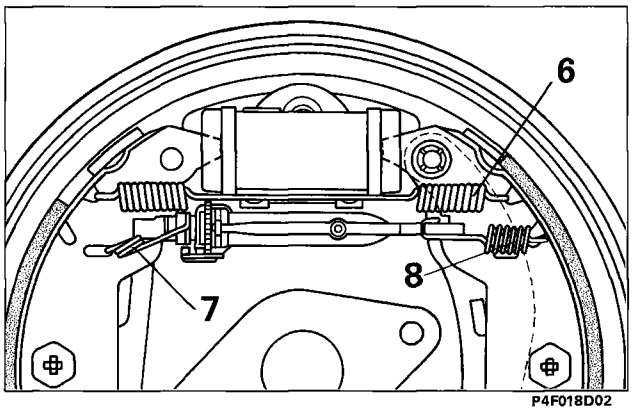

P4F018D02

By means of the self-adjusting device, the clearance between the shoes and the drum is constantly adjusted automatically for each braking, assuming that an adjustment is necessary.
The device is composed of a rod (1) in which an adjustment screw (2) to which a toothed ring nut (3) is bolted slides freely .
In the rest position, the front shoe return spring (6) keeps the device compressed, as a result of which the ring nut (3) pushes the plate (4) in contact with the end of the rod (1).

The plate (4) is also subjected to a thrust action from the flexbile blade (5). During the braking action the two shoes move away from one another and come into contact with the drum; the two ends of the device are kept in contact with the shoes by means of springs (7) and (8).
The plate (4) thrust by the flexible blade (5) produces a reaction on the toothed ring nut (3) and, by means of the clip (9) (in permanent contact with the toothed ring nut), causes its rotation [1].
During the release stage, the self-adjusting device is compressed once again by the action of the upper shoe return spring (6): the toothed ring nut (3) stops in the angular position assumed during braking.
This stop during the rotation stage is due to the friction between the plate (4) and the toothed ring nut (3). With the toothed ring nut (3) prevented from rotating, if the wear due to previous braking is sufficient, the clip (9) moves and engages the next tooth [2]. The maximum travel for the toothed ring nut (3) on the adjustment screw (2) is one tooth (0.020 - 0.025 mm): the bedding in of the brakes after dismantling is an exception: the travel is two teeth (0.04 - 0.05 mm).
If following excessive braking the brakes should overheat and the temperature reach 100° - 110°C, then the device comes into operation, the flexible blade (10) curves and stops the plate (4) in a neutral position [3].

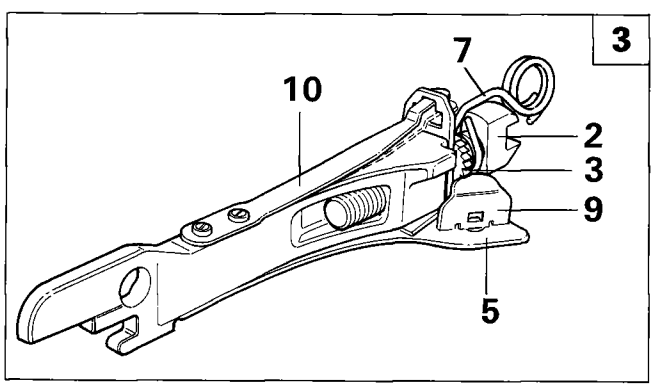

P4F018D04

During braking the toothed ring nut (3) is no longer subject to the thrust action of the flexible blade (5), consequently the clip (9) assumes the same angle as the ring nut toothe which will be free to slide with the adjustment screw (2) on the clip (9) without recovering the clearance due tothe expansion of the drum.

In the case of overhauling, before fitting the brake linings, the toothed ring nut (3) for the device must be positioned in contact with the spring (7) and undone by half a turn.

1

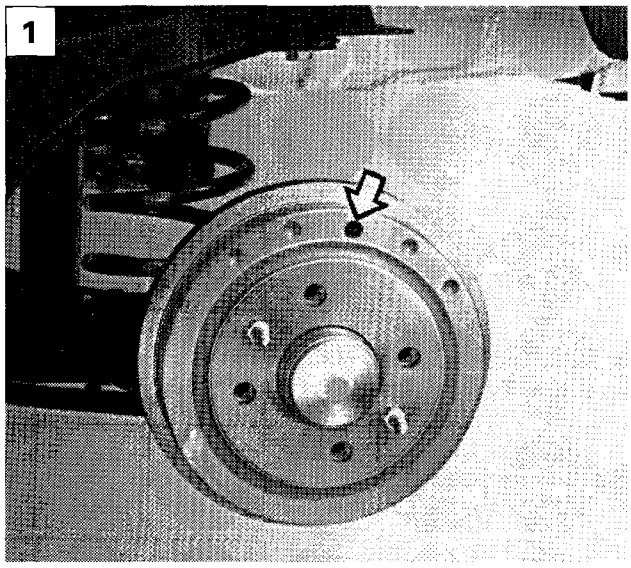

P4F019D01

2

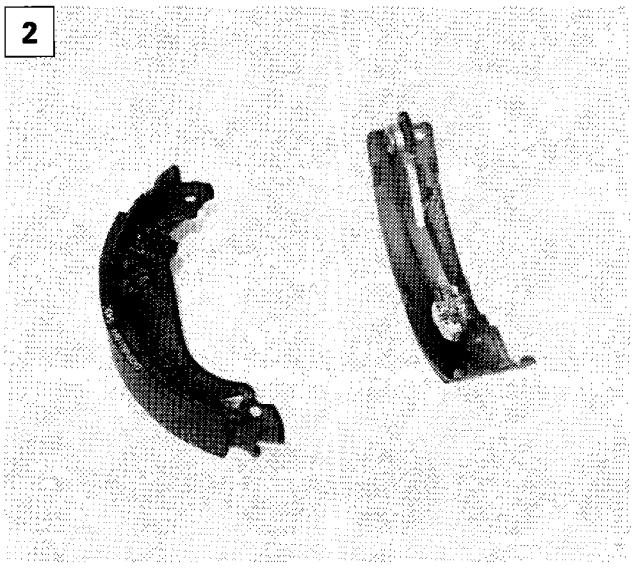

P4F019D02

3

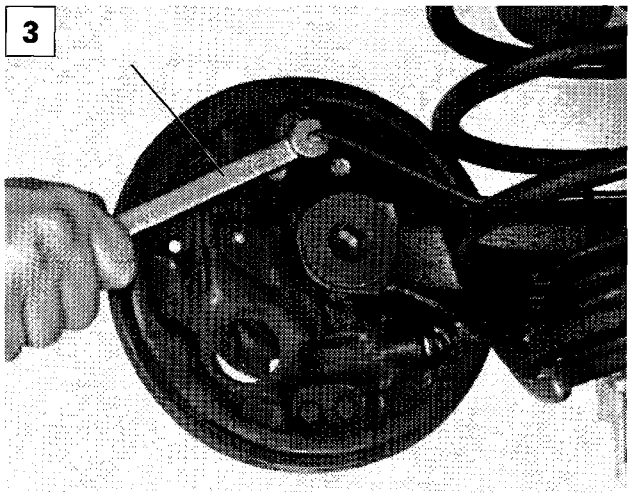

P4F019D03

1. Location on brake drum of inspection opening for thickness of shoe material.

SHOES

2. Check the shoe. The minimum permissible thickness for the brake lining is 1.5 mm.

SHOE CYLINDER

Removing-refitting

To remove the shoe cylinder, carry out the following operations:

3. Using tool 1856132000, undo the connector for the brake pipe.
4. Undo the bolts fixing the shoe cylinder and remove it.
5. Check the shoe cylinder components. When overhauling always replace the seals and the protective boots; if there are irregularities with the cylinder casing or the pistons, replace the assembly.
   Make sure that the bleed screw is not obstructed.

4

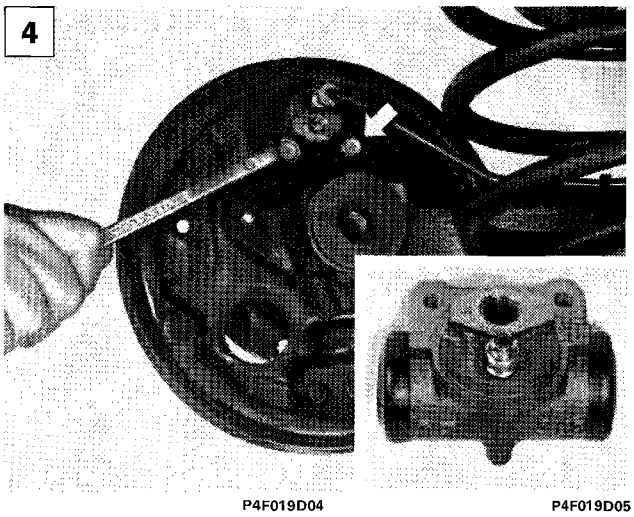

P4F019D04 P4F019D05

5

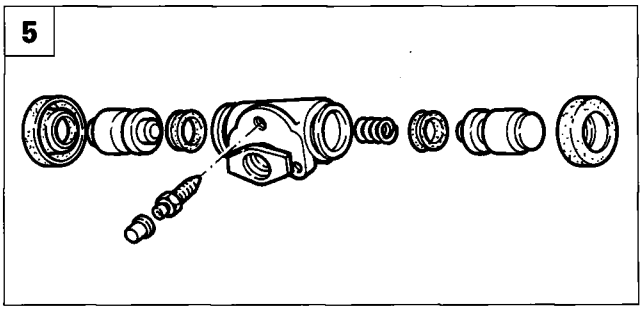

P4F019D06

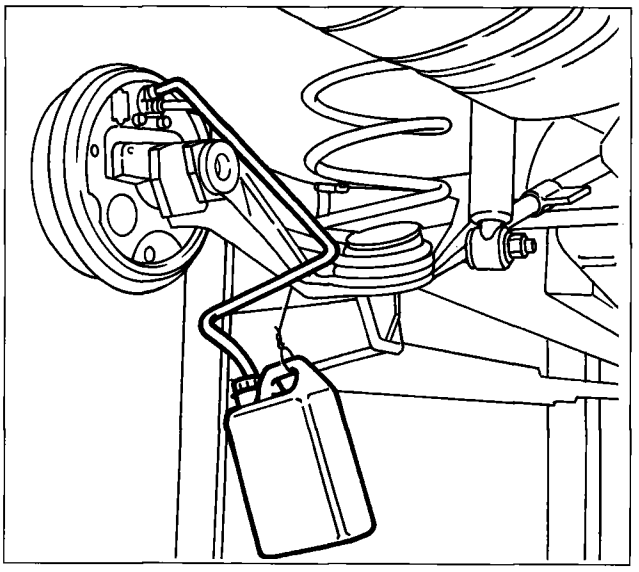

P4F020D01

BLEEDING

It is not advisable to reuse the brake fluid collected.
The level should be topped up with new brake fluid.

The air should be bled from the rear brakes using a lift with the rear suspension resting on the ground so that the load proportioning valve comes into operation.

NOTE *The bleeding can also be carried out using the Jollyfren equipment following the procedure described for the front brakes.*

DIAGRAM SHOWING HYDRAULIC OPERATIONOF BRAKES (FRONT AND REAR - DISC) AND MECHANICAL OPERATION OF HANDBRAKE

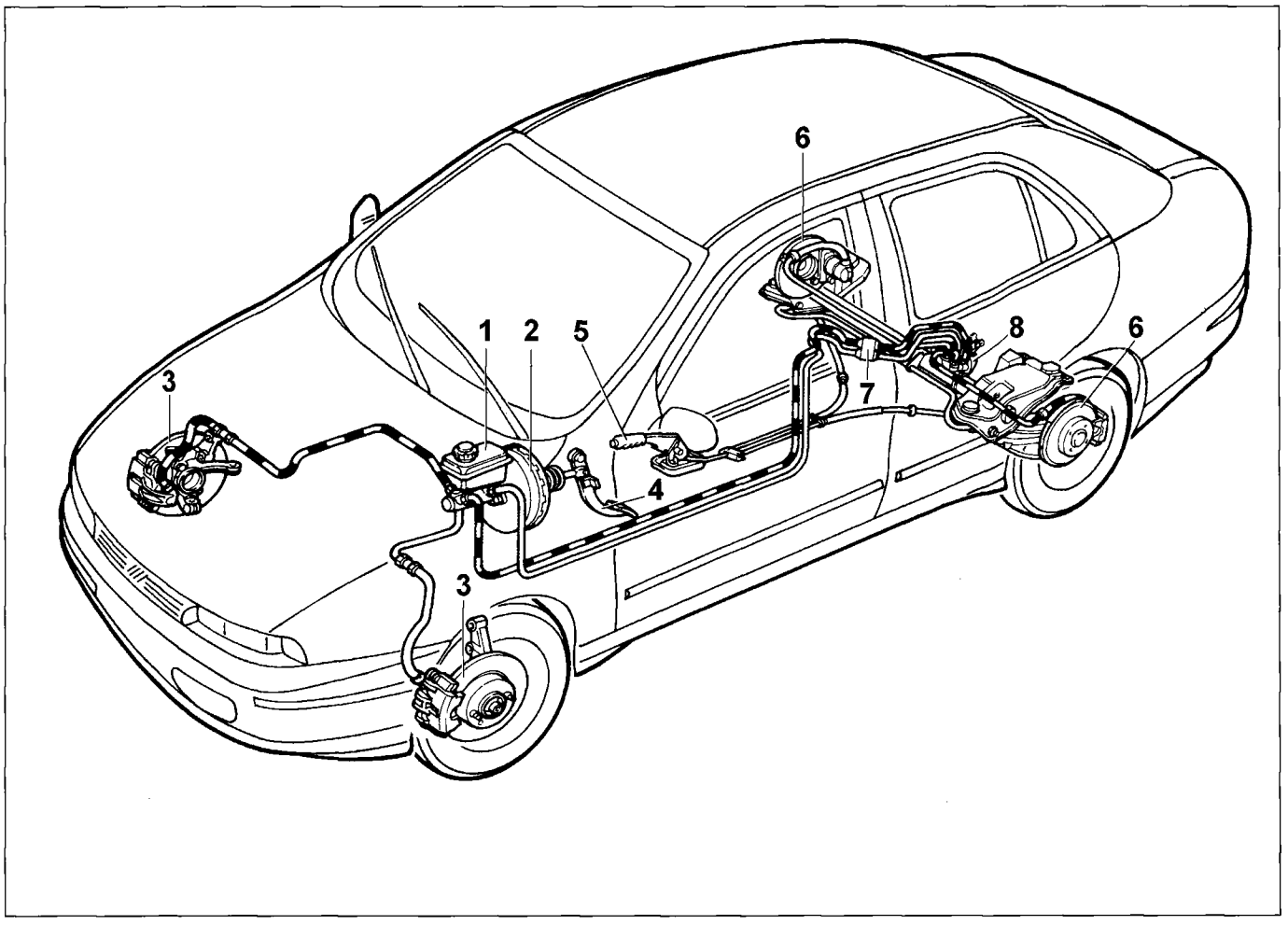

P4F021D01

1. Brake fluid reservoir and pump for inependent braking circuits
2. Vacuum servo brake
3. Front disc brakes
4. Brake pedal
5. Handbrake lever
6. Rear disc brakes
7. Load proportioning valve

Copyright by Fiat Auto

33.

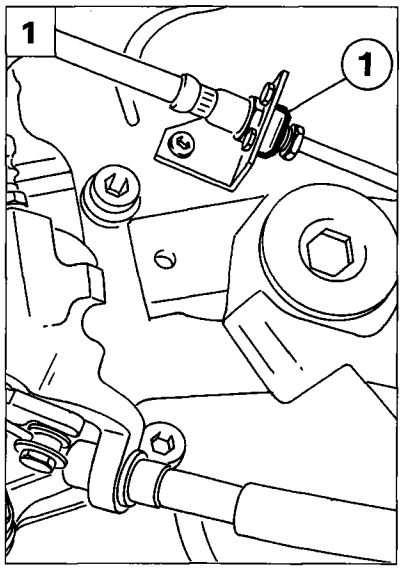

P4F022D01

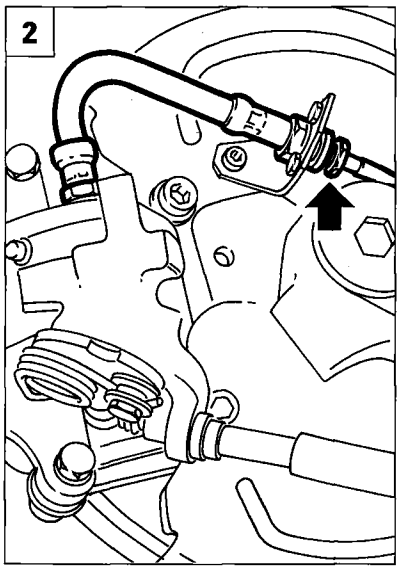

P4F022D02

DISC BRAKES

Removing-refitting

Proceed with dismantling the rear disc brakes carrying out the following operations:

1. Extract the clip (1).
2. Undo the connector for the flexible pipe using spanner 1856132000.

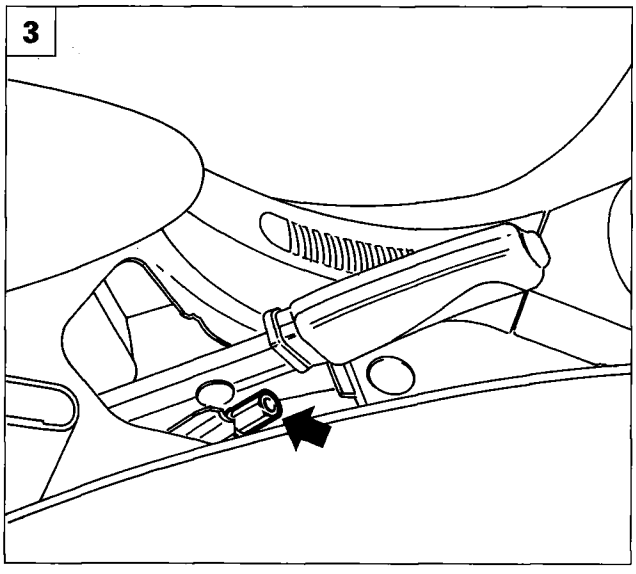

P4F014D04

3. Loosen the tension of the handbrake cable acting on the screw shown in the diagram after having removed the control lever cover.
4. Release the handbrake cable.
5. Undo the bolts fixing the brake caliper and remove it.

The bolts fixing the brake caliper are self-locking and should be replaced each time they are undone or loosened.

NOTE *After having replaced the brake calipers,carry out the adjustment of the handbrake.*

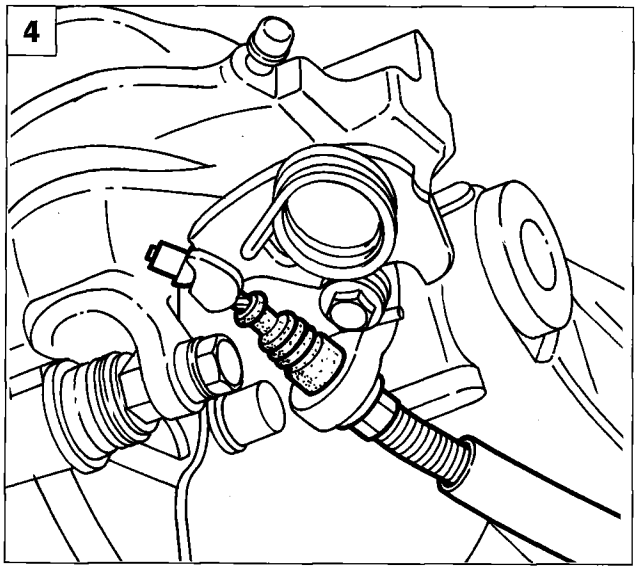

P4F022D04

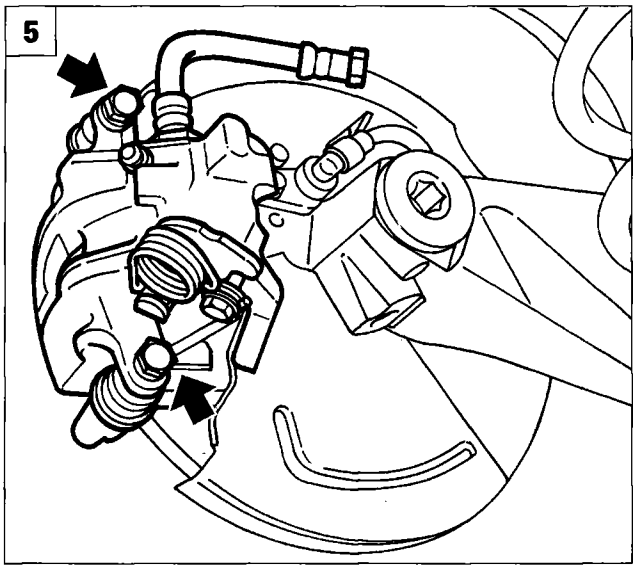

P4F022D05

1

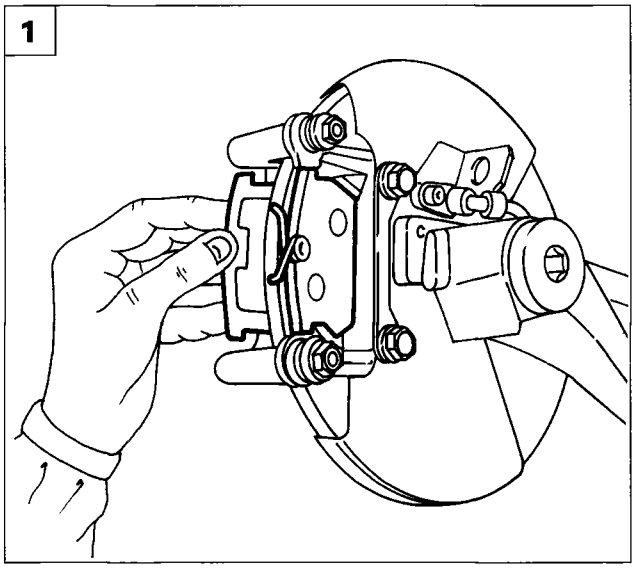

P4F023D01

2

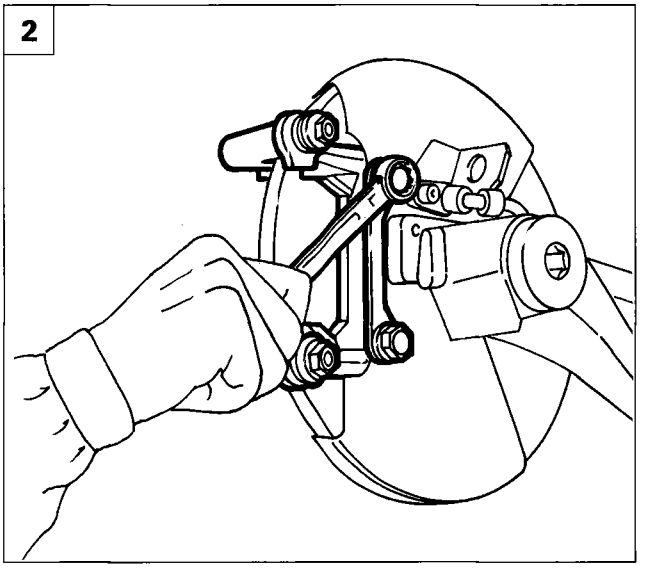

P4F023D02

3

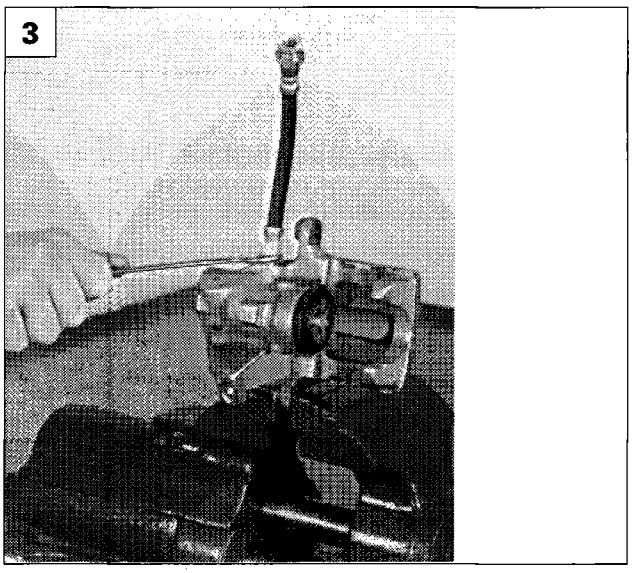

P4F023D03

4

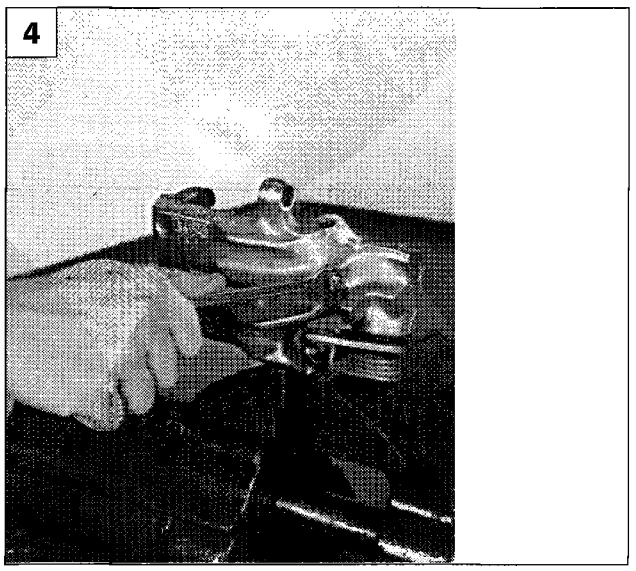

P4F023D04

1. Remove the brake pads.

NOTE *Before positioning the new brake pads the caliper piston must be fully retracted by turning it in a clockwise direction using tool 1856133000. Also adjust the handbrake.*

2. Undo the bolts for the caliper support bracket and remove it.

Before refitting the caliper support bracket, check that the rubber seals are intact; if this is not the case, they should be replaced.

When refitting remember to place the brake back plate between the bolts and the mounting bracket.

BRAKE CALIPER

Dismantling

Position the brake caliper in the vice, placing the protection in position, then proceed as described below:

3. Remove the flexible pipe undoing the appropriate connector.
4. Undo the bleed screw and remove it.

NOTE *The flexible pipe should not be inflated or cracked or else it must be replaced. It is advisable to replace both flexible pipes.*

Copyright by Fiat Auto

33.

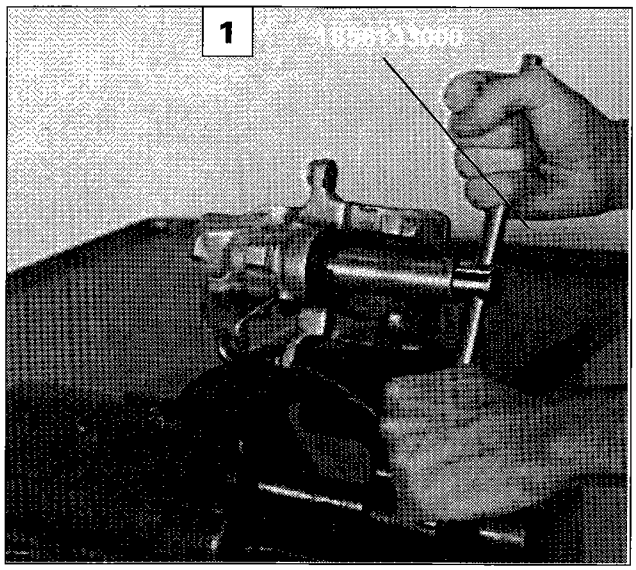

P4F024D01

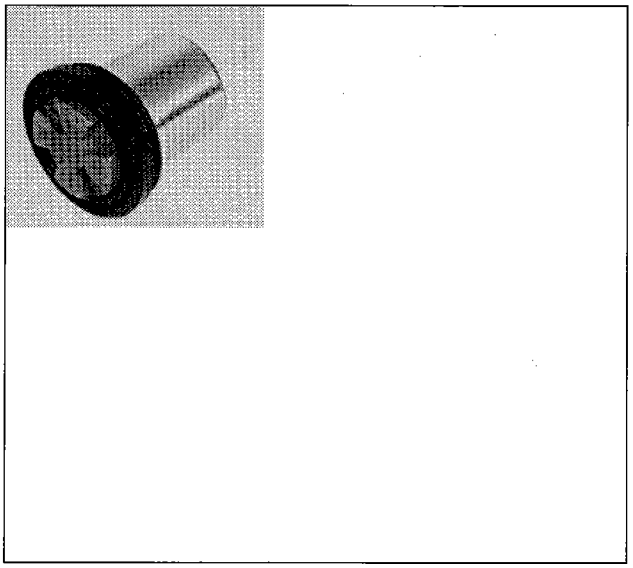

P4F024D02

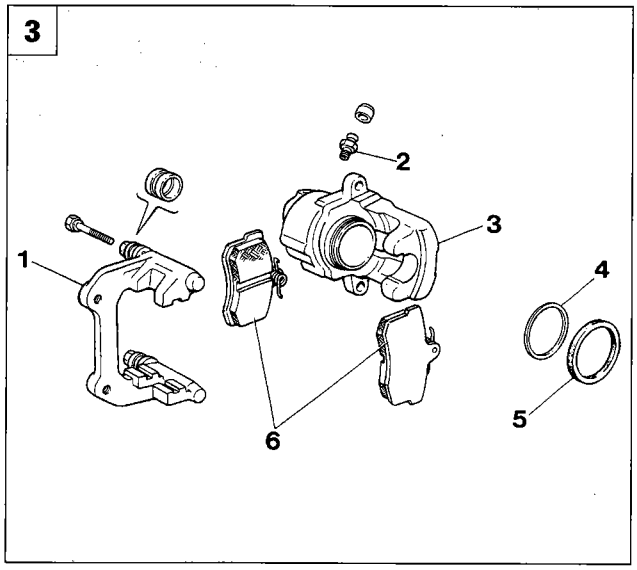

P4F024D03

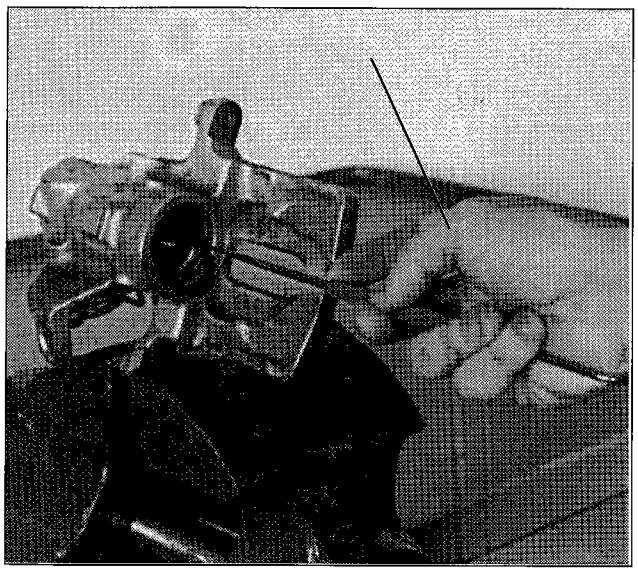

P4F024D04

1. Using tool 1856133000, remove the piston and the protective boot from the caliper casing.
2. Remove the seal.
3. Check the caliper assembly components. The piston and the caliper casing should not show signs of abrasion or seizing or else the caliper complete with piston has to be replaced.
   In any case it is always necessary to replace the protective boot and the seal; also make sure that the bleed screw is not obstructed.

Use a solution of hot water and FIAT LDC detergent to wash the metal components.

1. Caliper support bracket
2. Bleed screw
3. Caliper casing
4. Seal
5. Protective boot
6. Brake pads

Refitting

4. Fit the piston in the caliper casing using tool 1856133000.

Before fitting the piston in the caliper casing, position the boot on the rear part of it.

the parts concerned with brake fluid before fitting.

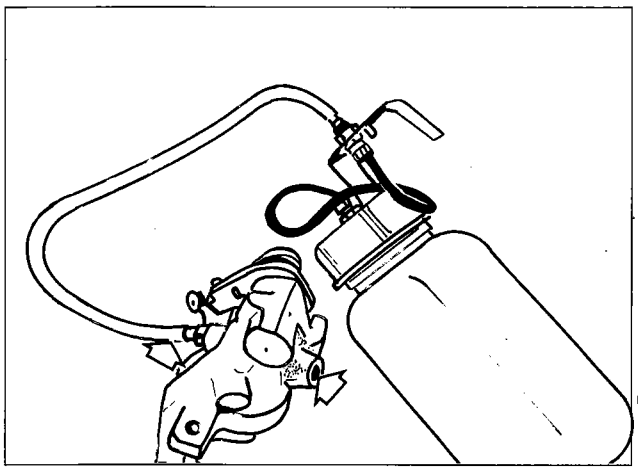

P4F025D01

Filling the brake caliper

After overhauling the brake caliper and before refitting it on the vehicle it should be filled in the following way:

- loosen the bleed screw;
- insert the end of a transparent pipe into the bleed screw opening;
- using a normal container with brake fluid, introduce it into the caliper until air bubbles come out of the threaded opening where the flexible brake pipe is connected;
- lock the bleed screw.

AUTOMATIC DEVICE FOR ADJUSTING CLEARANCE BETWEEN REAR BRAKE PADS AND DISCS AND HANDBRAKE

There is a device in the rear brake caliper pistons which allows the automatic adjustment of the distance between the disc and the brake pads. This device comprises a female screw (2), which can only rotate on the shaft (5) in a forwards direction on account of the action of the spring (4), and a shaft (5) onto which the female screw (2) is tightened. This shaft cannot rotate as it is secured to the brake caliper casing. Between the shaft and the female screw there is a thread (with four sections) with a pre-set clearance (A).

During braking, the piston (1), thrust by the hydraulic pressure, moves towards the brake pad with the female screw (2), as the latter is secured to the piston by the cirlip (3) and the spring (4).

If the brake pads are excessively worn, then the end float (A), even if recovered, is not sufficient, by itself, to absorb the entire travel of the control piston (1). The female screw (2) therefore momentarily moves away from its point of contact with the piston (1), but the operation of the spring (4) causes the female screw (2) to turn on the shaft (5), until it makes it return in contact with the control piston (1).

When the handbrake is operated, the mechanical force is transmitted by the control lever to the shaft (9) whose rotation drives the balls (6) on a helical track (7) which causes the axial movement of the actual shaft and consequently that of the female screw-piston assembly and the brake pads. The female screw (2), and consequently the piston (1) fixed to it, cannot rotate as during braking the piston is locked to the brake pad plate.

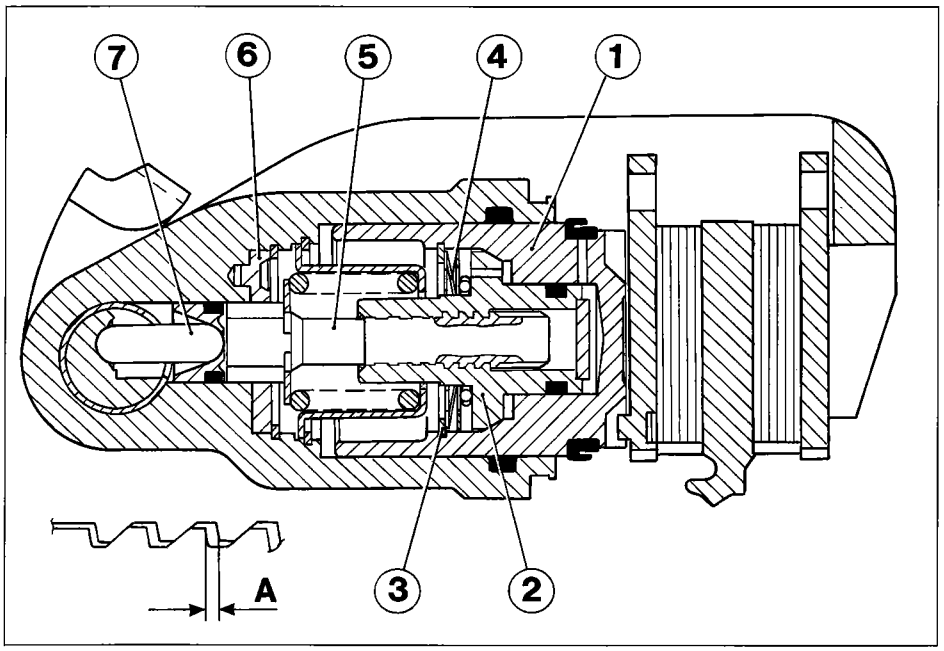

P4F025D02

Section of rear brake caliper cylinder

1. Piston
2. Female screw
3. Circlip
4. Spring
5. Control shaft
6. Ball
7. Helical track
8. Control lever
9. Shaft (rotary)

A. Clearance between female screw and shaft

33.

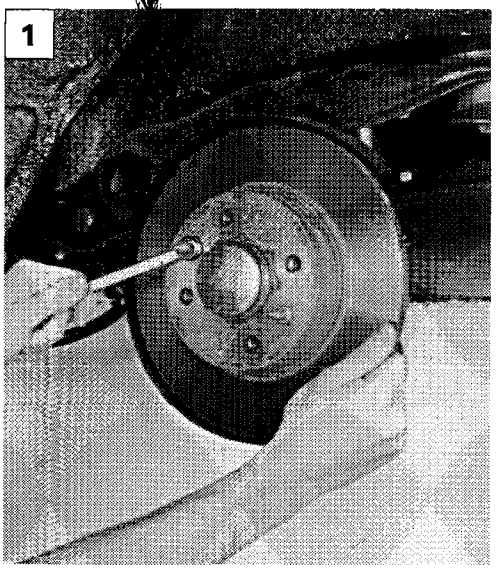

P4F026D01

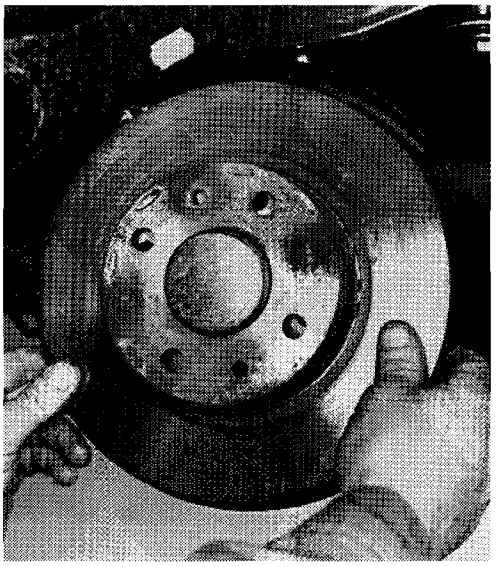

P4F026D02

BRAKE DISCS

Dismantling-reassembly

1. Undo the bolts fixing the brake dics and remove it; when refitting remove any traces of rust to ensure that the disc is perfectly perpendicular in relation to the hub.

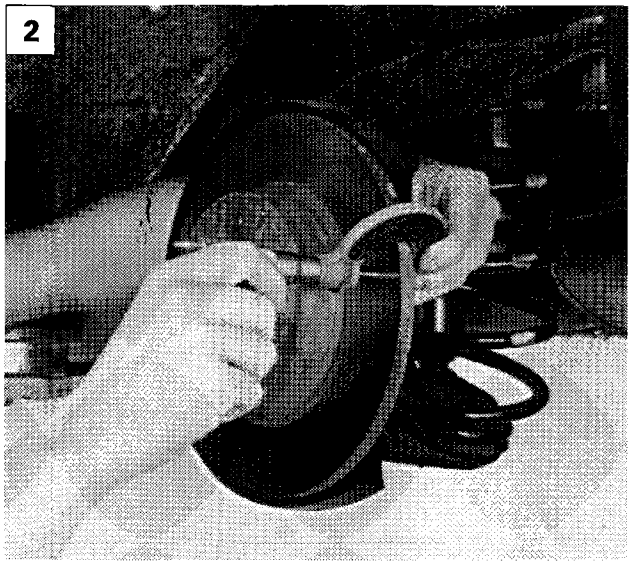

P4F026D03

2. Check the thickness of the brake disc. The thickness of the brake disc when new is 10.8 - 11.1 mm. The minimum permissible thickness after wear is 9.20 mm; if the value measures less than this then the brake disc should be replaced.
In the case of deterioration or deep grooves, the surfaces of the brake disc can be skimmed using a grinder; when the operation is completed, the thickness of the brake disc should not be less than 9.55 mm.

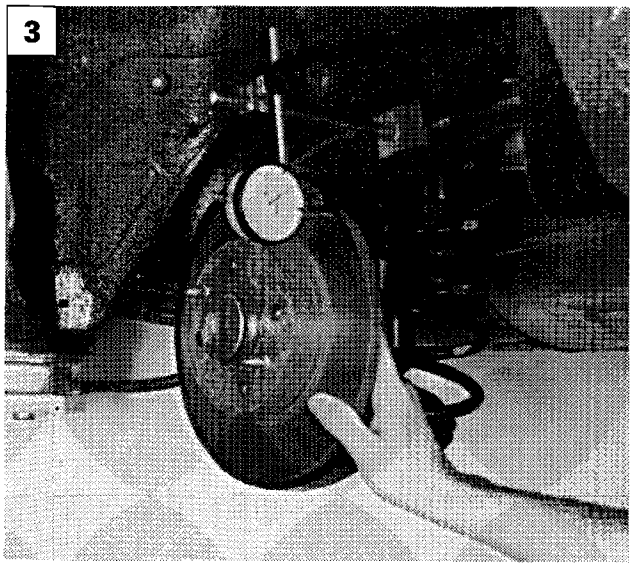

P4F026D04

3. Check that the brake disc is no more than 0.15 mm off centre. This value is measured 2 mm from the outside diameter of the disc.

1

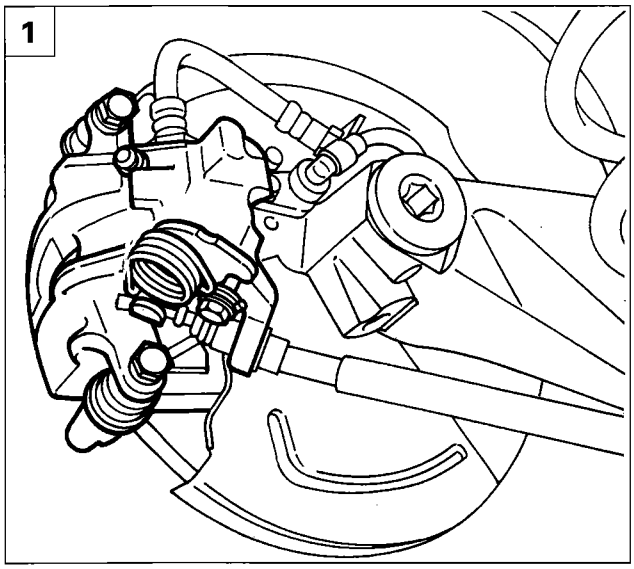

P4F027D01

2

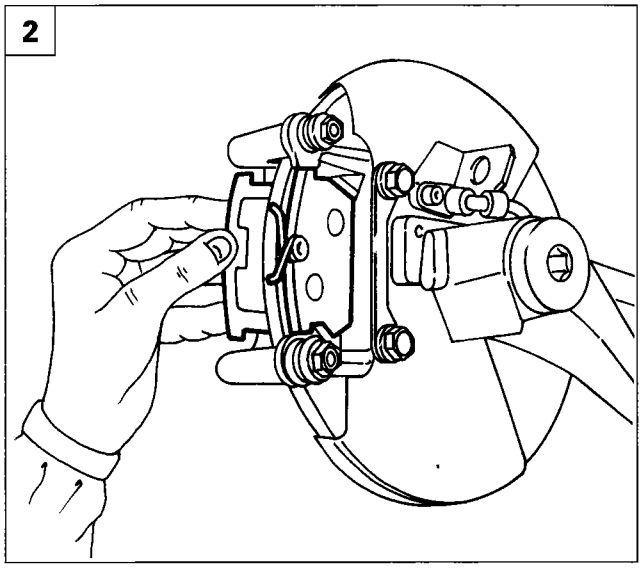

P4F023D01

3

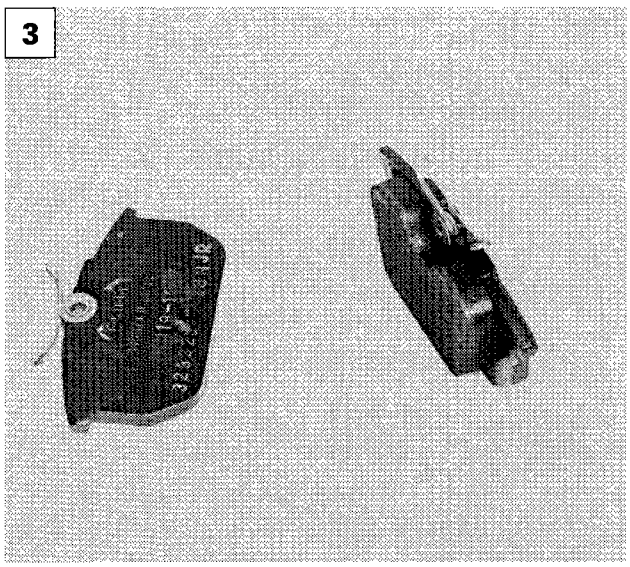

P4F027D02

4

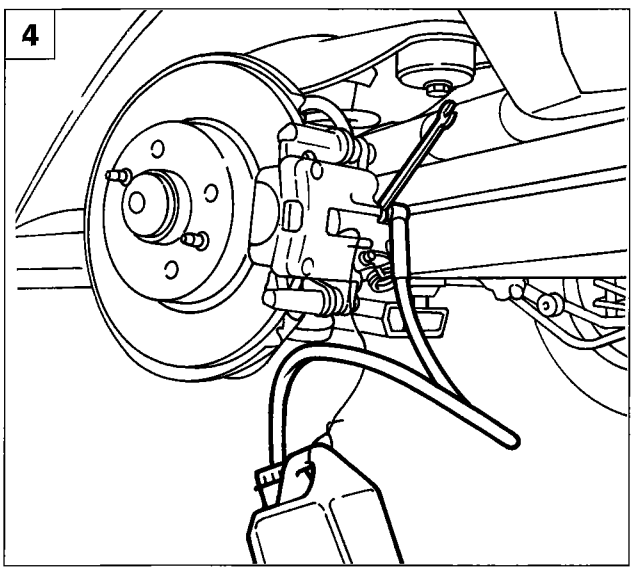

P4F027D03

BRAKE PADS

Removing-refitting

To replace the brake pads, proceed as follows:

1. Undo the bolts fixing the brake caliper to the mounting bracket, then secure the caliper as appropriate.
2. Extract the brake pads and position the new ones.

The bolts fixing the caliper casing are self-locking and should be replaced each time they are undone or loosened.

NOTE *When refitting ensure that the caliper piston is retracted before fitting the brake caliper.*

Carry out the adjustment of the hand-brake cable.

3. Check the brake pads. The pads should be replaced when the friction material is less than 1.5 mm thick.
   Check that the same type of brake pads are fitted on each pair of wheels.

Bleeding

4. It is not advisable to reuse the fluid collected. The level should be topped up with new brake fluid.
   The brakes can also be bled using Jollyfren equipment, following the procedure described for the front brakes.

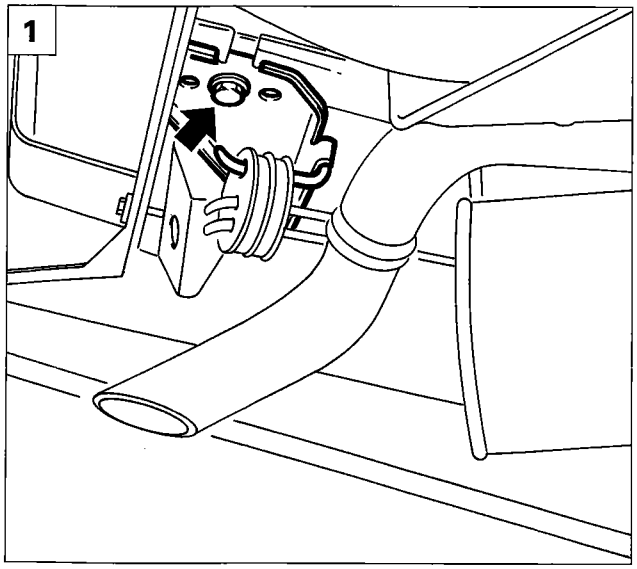

P4F028D01

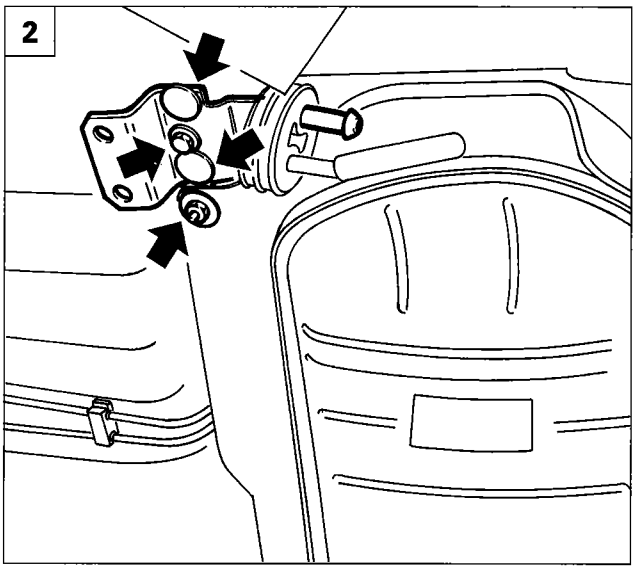

P4F028D02

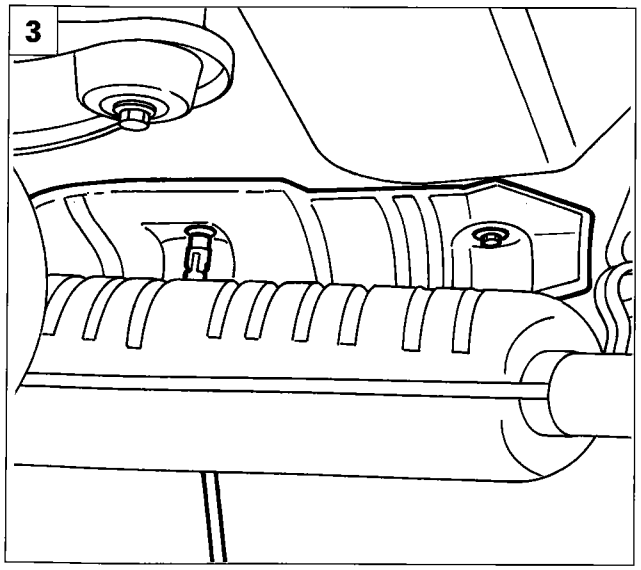

P4F028D03

LOAD PROPORTIONING VALVE

The 1370 12v version (without ABS), has a load proportioning valve which operates at 35 bar.

Removing-refitting

Proceed with the removal of the load proportioning valve carrying out the following operations:

1. Remove the support for the end section of the exhaust pipe.
2. Remove the support from the middle part of the exhaust pipe.
3. Undo the nuts fixing the heat shield, then remove it to facilitate access to the load proportioning valve.

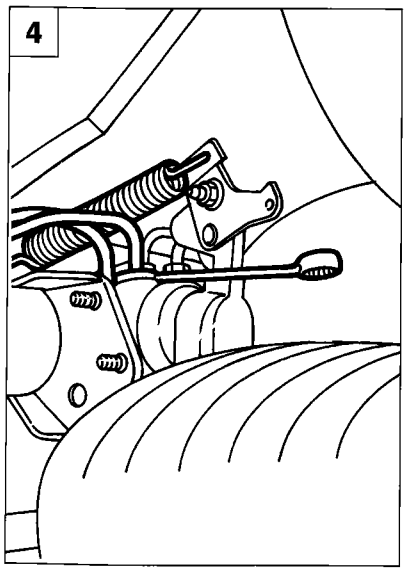

P4F028D04

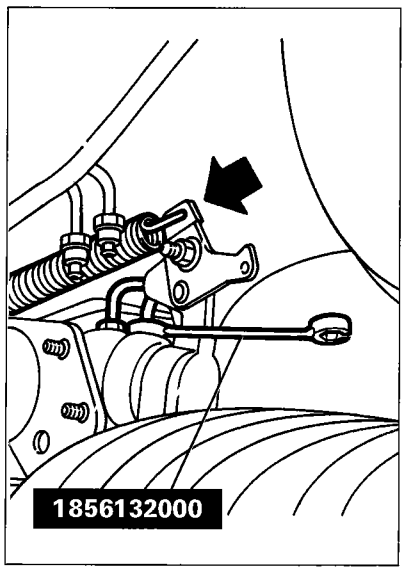

P4F028D05

4. Undo the connectors for the flexible pipes and disconnect the spring shown in the diagram.

The connectors are 11 mm and 13 mm, respectively; for the former use spanner 1856132000, for the 13 mm ones use a fixed spanner taking great care not to damage the connectors.

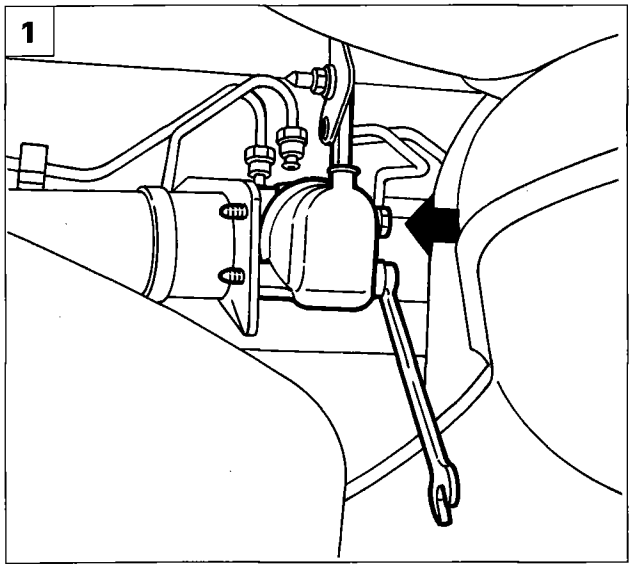

P4F029D01

1. Unscrew the retaining bolts and remove the load proportioning valve.

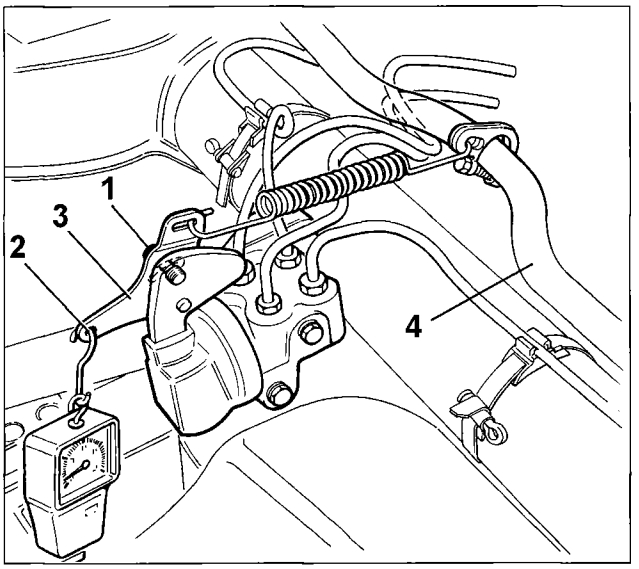

P4F029D02

Adjustment

- Settle rear suspension;
- position the car (in running order, i.e. with the coolant circuit fuel, spare wheel and accessories correctly arranged and with a full tank of fuel) on a horizontal plane with wheels on the ground;
- load a weight P as shown in the table below into the luggage compartment, as close as possible to the centre of the floor pan in order to achieve a load on the rear axle of 600 ± 5 Kg, distributed equally over both wheels;
- loosen the bracket retaining bolt (1);
- apply torque wrench 1895873000 or 1895901000 to bracket eye (2)
- apply load C with value as shown in the table below to the torque wrench;
- hold bracket (3) in this position and secure bracket reatining bolt (1).

NOTE *Replace the entire load proportioning valve if working incorrectly.*

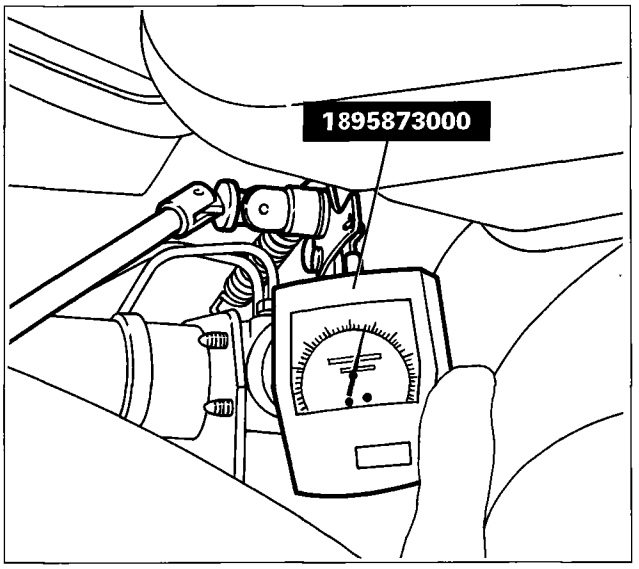

P4F029D03

	Marea			Marea Weekend		
	1370 ABS	**1581 16v 1910 TD 1747 16v**	**1998 20v 2387 TD**	**1370 12v**	**1581 16v 1747 16v 1910 TD 1581 BIPOWER**	**1998 20v 2387 TD**
P (Kg)	125.4 109*	125.4 109*	125.4 109*	94.5 77.2*	94.5 77.2*	94.5 77.2*
C (daN)	7±0,01	5.5 ± 0.01	7 ± 0.01	7 ± 0.01	5 ± 0.01	7 ± 0.01

(*) Weight to be applied to cars fitted with all accessories

Bleeding braking system

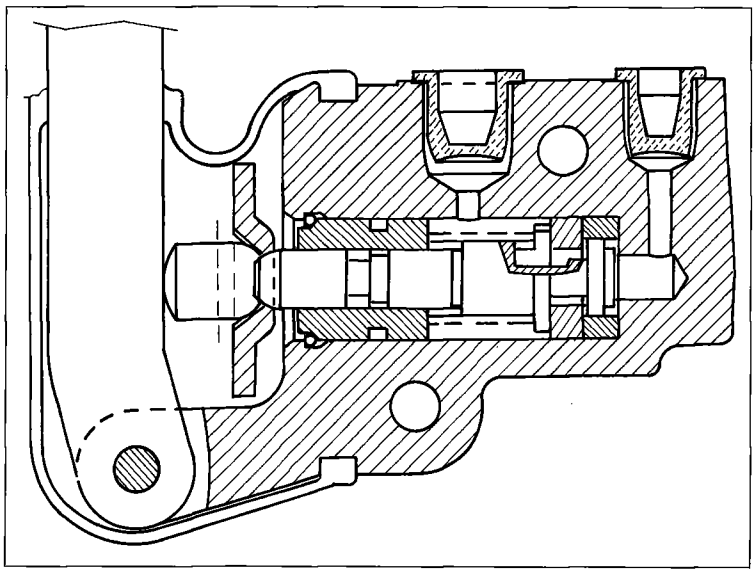

Cross section through load proportioning valve P4F030D01

Operation

The rear load proportioning valve is secured to a bracket on the rigid rear axle. It modulates braking pressure in the rear brake circuit in relation to the front wheel circuit according to load conditions and car deceleration. The pressure difference is determined by the position assumed by a spring connected to stabilizer bar (4), which acts on the load proportioning valve piston.

PARKING BRAKE

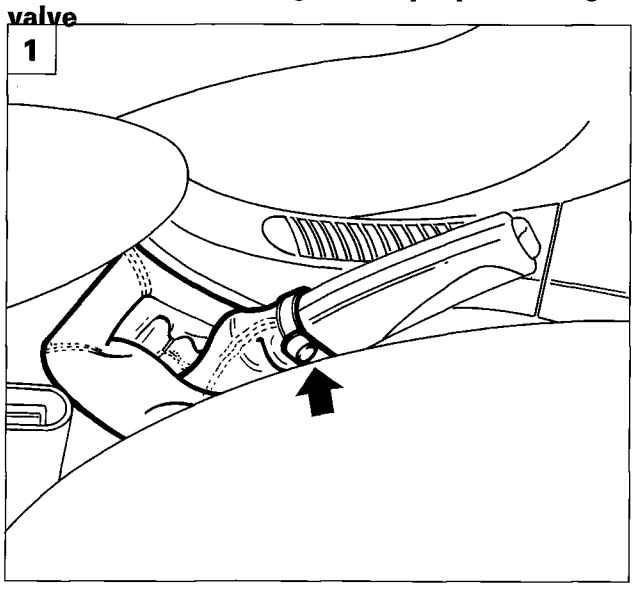

P4F030D02

Adjusting parking brake lever travel

Proceed as follows to adjust parking brake lever travel:

1. Remove the parking brake lever trim.

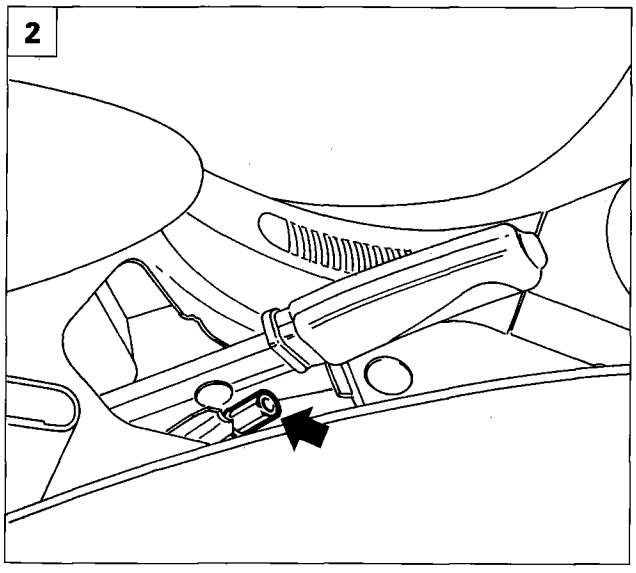

P4F014D04

2. Loosen or tighten the screw indicated to increase or decrease parking brake cable travel.

NOTE *After adjustment, the control lever should not engage with the toothed sector for more than five clicks and the wheels should turn freely when in rest position.*

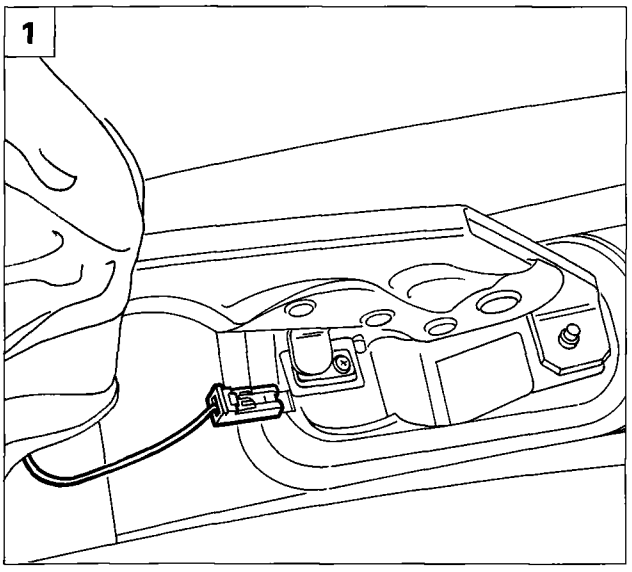

P4F032D02

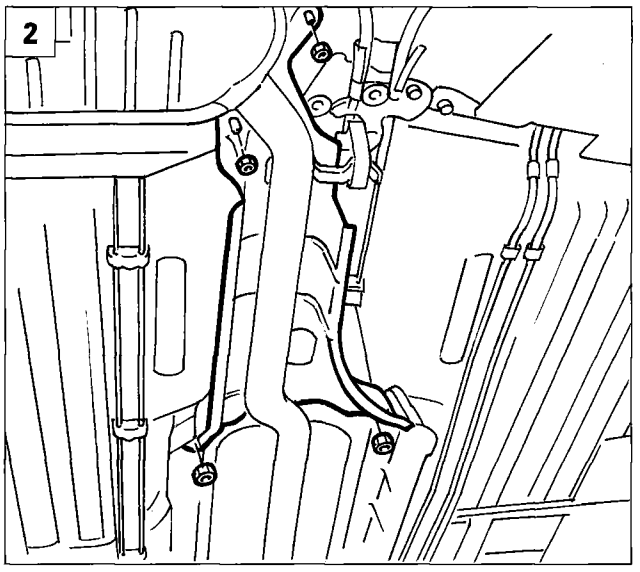

P4F032D03

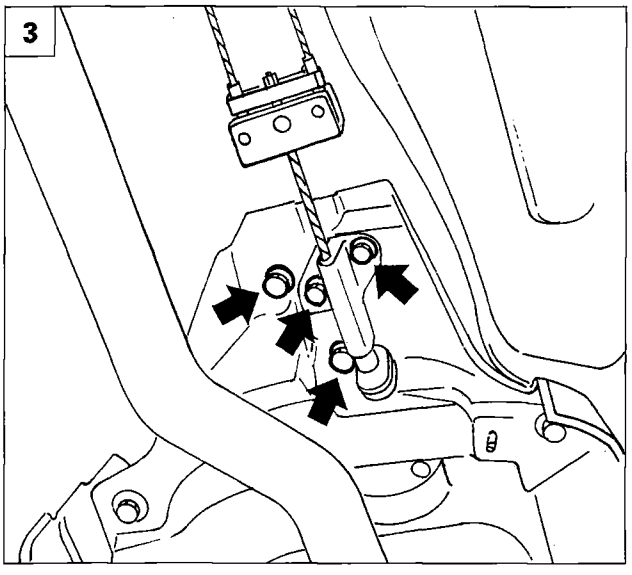

P4F032D04

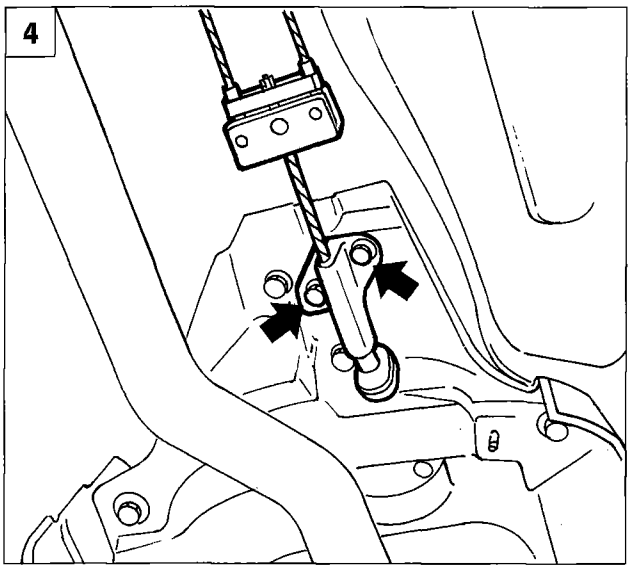

P4F032D05

Parking brake lever

Removing - refitting

1. Proceed as described on the previous page to remove the lever trim and unscrew the underlying adjustment nut. Then disconnect the electrical connection of the parking brake warning light switch.
2. Raise the car using the lift and remove the heat shield shown.
3. Unscrew the retaining bolts indicated, lower the car and remove the lever from its seat.

Refit parts in reverse order and then adjust the parking brake.

Parking brake cables

Removing - refitting

4. Proceed as described previously to prise up the lever trim, loosen the adjustment nut, raise the axle and remove the heat shield. Then unscrew the bolts retaining the brake cable mount to the body.

4F100D

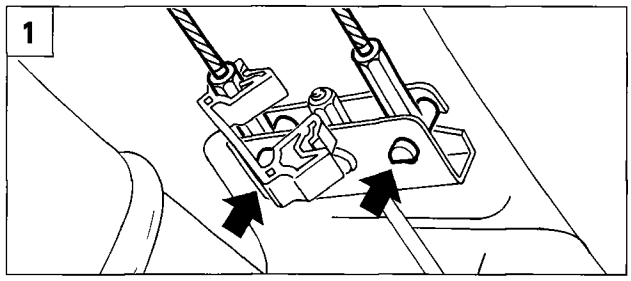

P4F033D03

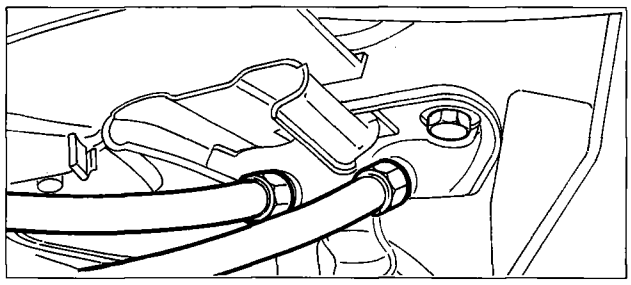
P4F033D04

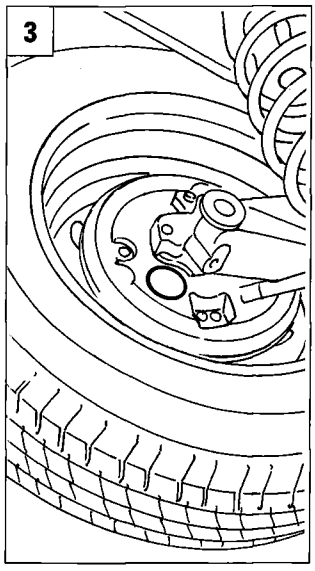

P4F033D05

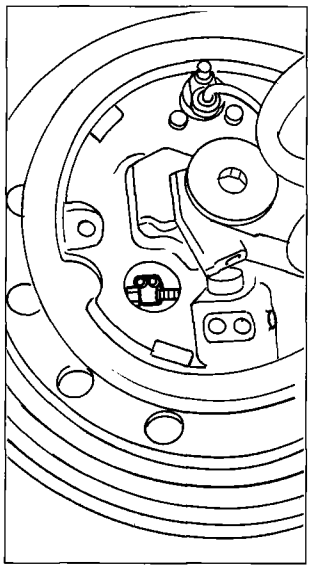
P4F033D06

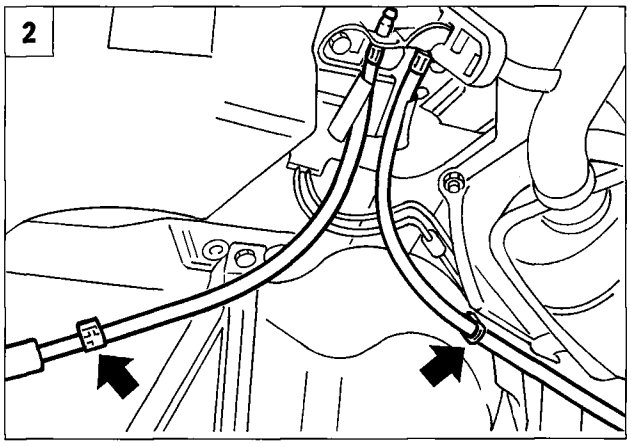

P4F033D07

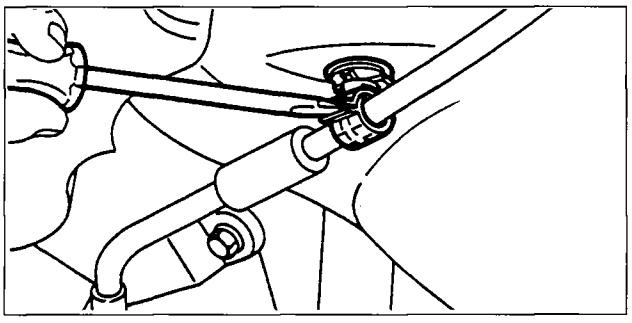
P4F033D08

1.2. Separate the cables from the parking brake linkage at the points indicated.

3. Remove the cap shown and release the parking brake cable from the anchorage on the control lever, then withdraw the sheath with the parking brake cable and remove.

Refit parts by reversing removal procedure. Then adjust the parking brake.

Adjusting parking brake

The parking brake cables are connected to a bracket that acts directly on the automatic play take-up device. Whenever the cables are disconnected to work on the rear brake, the cables must be adjusted in order to ensure the automatic play take-up device works properly.

Proceed as follows:

- Unscrew the parking brake cable adjustment nut by two or three turns to ensure that the cable is completely slack.
- Start up the car with the gear lever in neutral position. Leave the engine idling and press the brake pedal to the floor at least 30 times.
- Retighten the cable adjustment nut loosened previously. Ensure that the rear wheels turn freely with the handbrake lever at rest.
- Check that braking action begins at the first or second click and ensure that the lever does not engage the toothed sector by more than five clicks after adjustment.

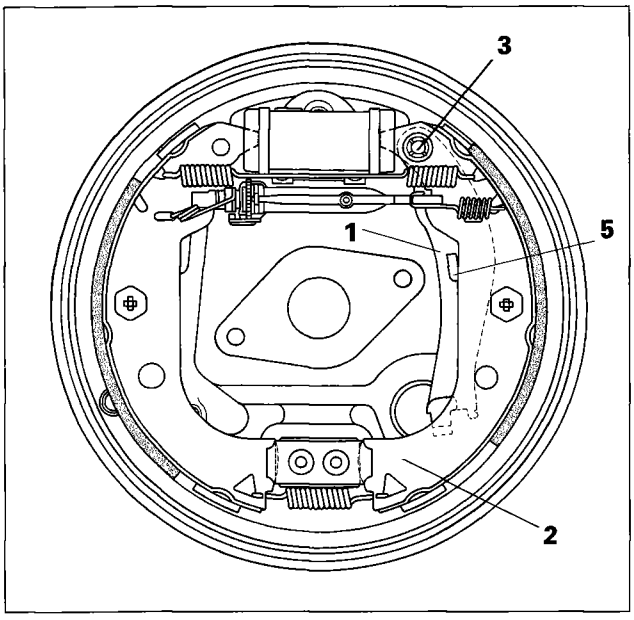

P4F031D01

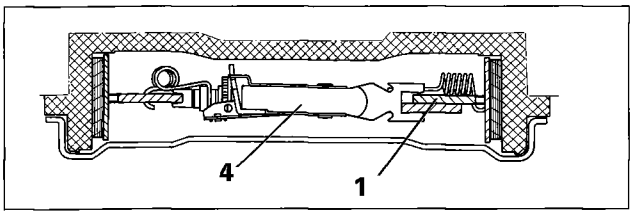

P4F031D02

Operation

The handbrake acts by means of a cable on the rear brakes.
This cable is secured at the bottom with the bracket (1) which is hinged at the top with the shoe (2) from the clip washer (3) (it must always be replaced when overhauling the rear brakes).
The bracket (1) in the upper part is also secured to the self-adjusting device for the recovery of the clearance produced by the shoes, therefore the handbrake does not require adjustments.
The bracket (1) is kept in contact with the shoe (2) by means of the projection (5).

Handbrake components

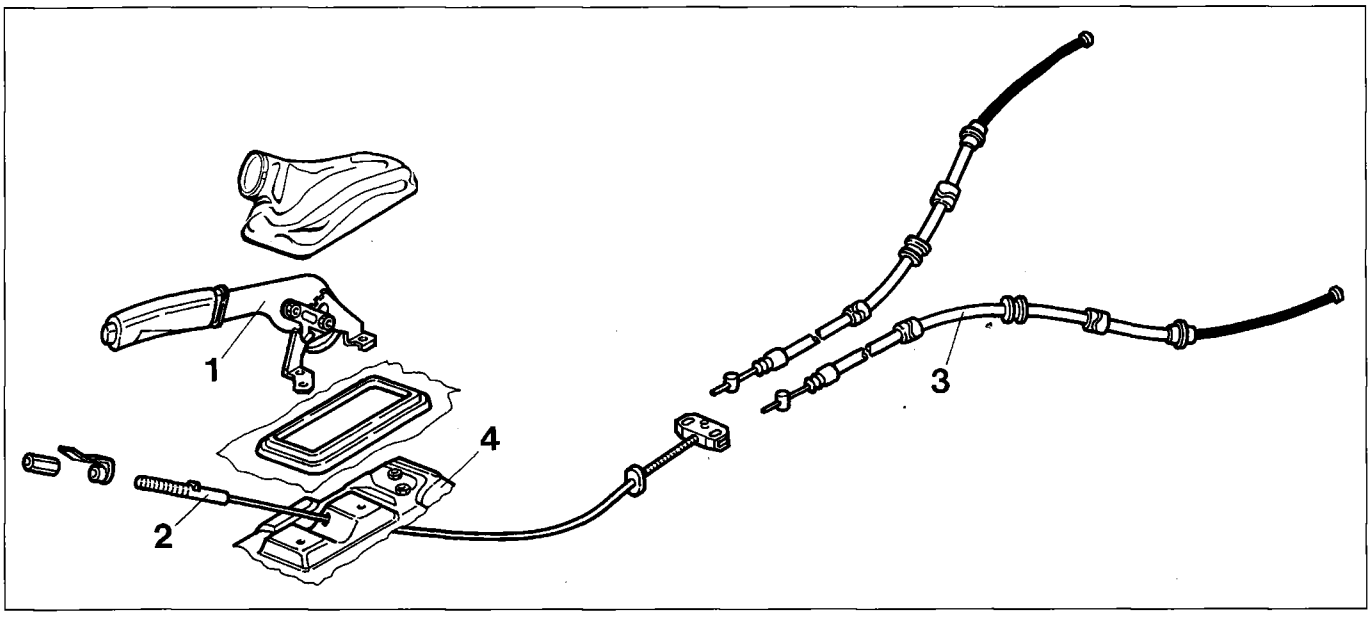

P4F031D03

1. Control lever complete with toothed sector
2. Handbrake cable complete with anchorage
3. Cable and outer casing
4. Support plate

NOTE *Check the operation of each component and check that the cable slides in its housing. If there is wear or hardening, replace the parts concerned.*

ANTI-LOCK BRAKES (A.B.S. Lucas "Down Sized")

COMPOSITION

The A.B.S. Lucas " Down Sized " system, featuring lightness, reliability and compactness (easy to fit), is distinguished from other similar anti-lock braking systems by the presence on each branch of the system of a single electro-hydraulic type "flow" valve with both load and discharge functions compared with the two solenoid valves usually found in A.B.S. systems.

The characteristics described above, in addition to the use of micro-hybrid type electronic components, allow for quieter and softer operation, considerably reducing the by now classical phenomenon of the vibration of the brake pedal during the operation of the A.B.S.

The main components of the system are:

- the hidraulic control unit (1) which modulates the braking pressure at the brakes
- the sensors (5) and (11), one for each wheel, which detect the angular rotation speed for the actual wheels

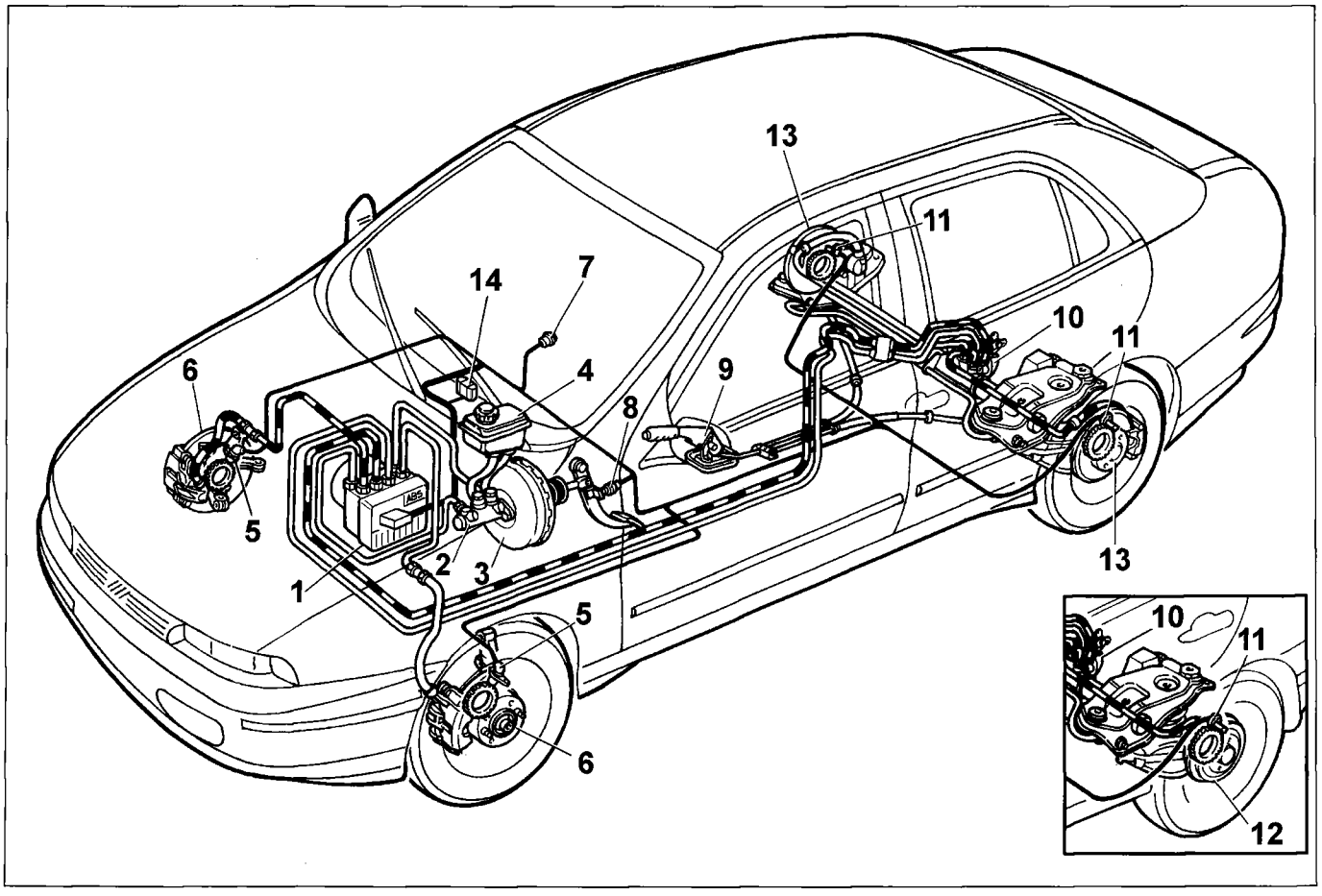

P4F032D01

Diagram showing A.B.S. Lucas "Down Sized" anti-lock brakes

1. Electro-hydraulic control unit
2. Master cylinder
3. Brake servo
4. Brake fluid reservoir
5. Front rpm sensors
6. Front disc brakes
7. A.B.S. failure warning light
8. Brake lights switch
9. Handbrake lever
10. Load proportioning valve
11. Rear rpm sensors
12. Rear drums (excluding 1998 16V and 2387 TD)
13. Rear discs (1998 16V and 2387 TD only)
14. Diagnostic socket

The following complete the system:
- the hydraulic system pipes;
- special electrical wiring;
- a switch on the brake pedal for detecting the braking conditions;
- a warning light (7) (ABS warning light) in the instrument panel.

The presence of a fault causes the A.B.S. system to be de-activated immediately.
As the information relating to faults in the system is not covered by the Blink Code function, it can only be received by connecting the Fiat-Lancia Tester or the Computerized Diagnostic Station to the diagnostic socket (14).

OPERATING PRINCIPLES

The function of the ABS system is to ensure the following for the vehicle in all driving conditions:
- stability
- driveability
- optimum braking

Optimum braking means optimizing the braking distances, taking advantage of the maximum adhesion available guarateed by the ground.
During emergency braking the driver must be capable of:
- avoiding an obstacle
- taking a bend
- controlling the vehicle even with different adhesion for the wheels

The most important attribute of an ABS system, apart from achieving improved braking distances, is the possibility of guaranteeing the manoeuvrability of the vehicle during emergency braking

NOTE *Since the adhesion between the road surface and the tyre is restricted by the physical characteristics of the contact elements the adhesion coefficient can, with the use of ABS systems, gradually becoming more sophisticated, can be better exploited but not overcome.*
Therefore emergency braking on smooth road surfaces always takes longer than on road surfaces with better grip.
The dangers caused by excessive speed cannot be compensated for by any type of A.B.S. system.

Creeping

Creeping is the adimensional expression expressed as a percentage for the ratio between the difference of the speeds of the vehicle Vv and the speed of the wheel Vr, and the speed of the actual vehicle Vv.

Creeping: $\lambda = (Vv - Vr)/Vv$

a) moving wheel Vv = Vr; $\lambda = 0$

b) stopped wheel Vr = 0; $\lambda = 1$ (100%)

Mechanics of the tyre

In order to reach the above mentioned objective, the regulation principles of the ABS must take into account the mechanical principles of the tyre.
With the increase in creeping, the braking force transmitted increases to a maximum value and then decreases considerably.
The lateral force (2), which can be transmitted simultaneously to the braking force (1), decreases as the creeping increases. There is usually an optimum creeping band of around 10 - 20% where the maximum braking force is still possible with sufficient transmission of lateral force.
The lateral forces for the front wheels allow driveability, the lateral forces for the rear wheels ensure stability.

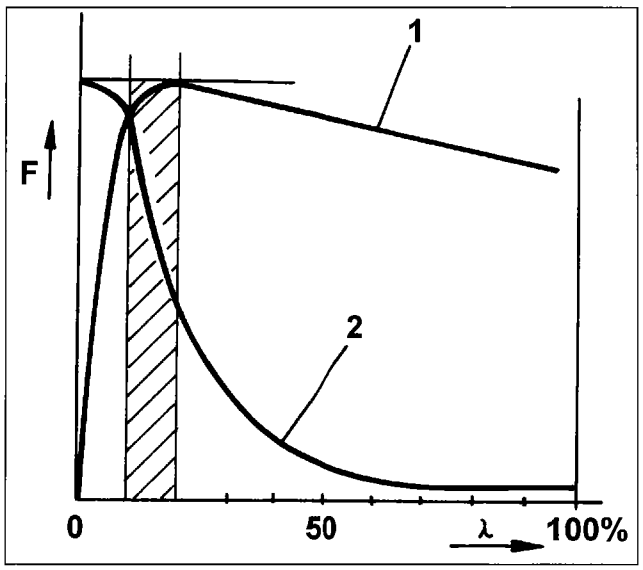

P4F033D02

COMPONENTS

Electro-hydraulic control unit

The electro-hydraulic control unit comprises two units (one electronic and the other electro-hydraulic) which cannot be divided, therefore if there is a problem with one of the two units then the entire electro-hydraulic control unit has to be replaced.

The electronic control unit is connected to the A.B.S. system wiring by means of a multiple connector with 28 terminals, 18 of which are used.

According to the signals coming from the sensors at the wheels and by means of typical maps stored in the memories, the electronic control unit manages the operation of the electro-hydraulic control unit.

The hydraulic control unit, connected through the braking system pipes to the brake pump and to the other braking system components, features an electro-hydraulic type "flow" valve for each branch of the system endowing the system with smoother operation free from the phenomenon of vibration typical to similar anti-lock braking systems which have two or three way joint "charging" and "discharging" solenoid valves.

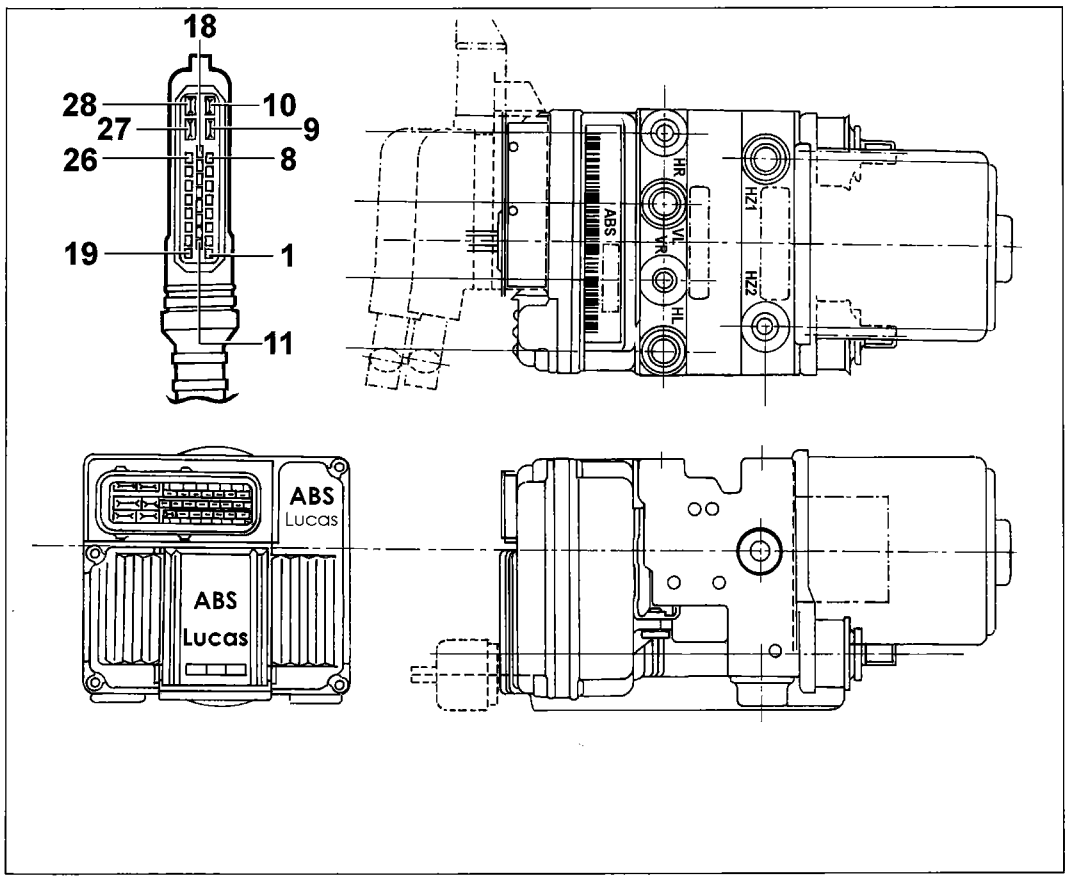

Electro-hydraulic unit and electrical connector

INTEGRATED ELECTRONIC CONTROL UNIT

The electronic control unit is connected in a binding way to the hydraulic unit. If there is a problem with the electronic unit then the entire unit has to be replaced, i.e. the hydraulic unit and the electronic one.

Hardware

The main input information for the two micro-calculators is the signals for the 4 rpm sensors which are processed in special elements (integrated circuits) for the requirements of the actual micro-calculators. The input information is processed and the results are compared for a safety check.

The output signals to the actuators (electro-magnetic valves) are also transmitted by special elements (integrated circuits) to the power transistors.

Software
The software fitted in the micro-calculators is divided into three elements:

1.Regulation software
It processes the signals arriving from the rpm sensors and decides the operation of the actuators in the hydraulic unit. The modulation of the pressure determines the braking force at the individual wheels.
2.Safety software
It regularly controls the condition of all the electrical components inside and outside the control unit for recognizing a possible defect. The first time the engine is started up after the ignition is switched ON, when a speed of 10 km/h is reached the function is also controlled. As soon as the safety software recognizes an error, the system switches off and informs the driver by the warning light in the instrument panel coming on.
3.Diagnostic software
It memorizes the error code produced by the safety software in a stable memory and allows the exchange of data with the Fiat Tester or the Computerized Diagnosis Station
Immediately after switching on, the ABS warning light comes on for around four seconds and then goes out if the system is okay.
In these four secondsthe control unit carries out different operating tests.
The logic installed in the micro-calculatr controls firstlythe components inside the control unit and then the external electrical components.
After about four seconds of this test programme, soon after the ABS warning light goes out, the pump motor is tested.
The safety software constantly controls the electrical components whilst the vehicle is operating.
If there is a fault in the system, the ABS warning light comes on, but goes out after four seconds. In this case the ABS is switched off, whilst the conventional system remains intact.
As stated, the ABS system has safety software which regularly controls the condition of all the electrical components inside and outside the control unit to identify possible faults.
In addition to this, in the case of a fault one or more error codes are set which give information on the cause of the fault.
The error codes are stored in a stable memory and remain available even after the ignition is switched off or the battery disconneted.
The control unit can memorize up to six different error codes.

Error codes table

CODE	DESCRIPTION	CODE	DESCRIPTION
77	Internal defect	74	Right rear rise in speed
56	Battery voltage too low	31	Left front rpm sensor gap incorrect
57	Battery voltage too high	32	Right front rpm sensor gap incorrect
62	Left front rpm sensor broken or cc. to "+"	33	Left rear rpm sensor gap incorrect
63	Right front rpm sensor broken or cc. to "+"	34	Right rear rpm sensor gap incorrect
64	Left rear rpm sensor broken or cc. to "+"	16	Left front flywheel speed difference
65	Right rear rpm sensor broken or cc. to "+"	17	Right front flywheel speed difference
66	Left front rpm sensor broken or cc. to earth	18	Left rear flywheel speed difference
67	Right front rpm sensor broken or cc. to earth	19	Right rear flywheel speed difference
68	Left rear rpm sensor broken or cc. to earth	38	Motor-pump broken
69	Right rear rpm sensor broken or cc. to earth	42	Failsafe relay on
71	Left front rise in speed	54	ABS failure w/l cc. to "+"
72	Right rear rise in speed	55	Panel-ABS w/l connection broken
73	Left rear rise in speed	44	ABS failure w/l cc. to earth

Since the parameters which the control unit controls (speed and acceleration of the wheel) are affected by the inertia of the wheel/tyre assembly, vehicles equipped with anti-lock braking systems must only have the wheel rims, tyres and brake pads recommended by the Manufacturer.

Copyright by Fiat Auto

33.

ELECTRO-HYDRAULIC CONTROL UNIT
The electro-hydraulic control unit is connected to the brake pump and the brake calipers by means of the braking system pipes illustrated in the diagram below and, together with the electronic control unit it forms the electro-hydraulic control unit.
Its task is to vary the pressure of the brake fluid, according to the electrical signals coming from the electronic control unit.

The electro-hydraulic control unit (1) is composed of:
- a single electro-hydraulic type valve for each of the four branches of the braking system, commonly known as the "vlow valve";
- a twin circuit electric pump (2);
- an electrical connector with 28 terminals;
- two expansion chambers and two silencer chambers;

Whilst the flow valve only operates thanks to the difference in pressure between the two ends, the solenoid valves and the electric pump are operated by the electronic control unit on the basis of the signals from the four rpm sensors in the wheels.

The electro-hydraulic unit is connected to the braking system by means of connectors identified by codes as illustrated in the diagram.

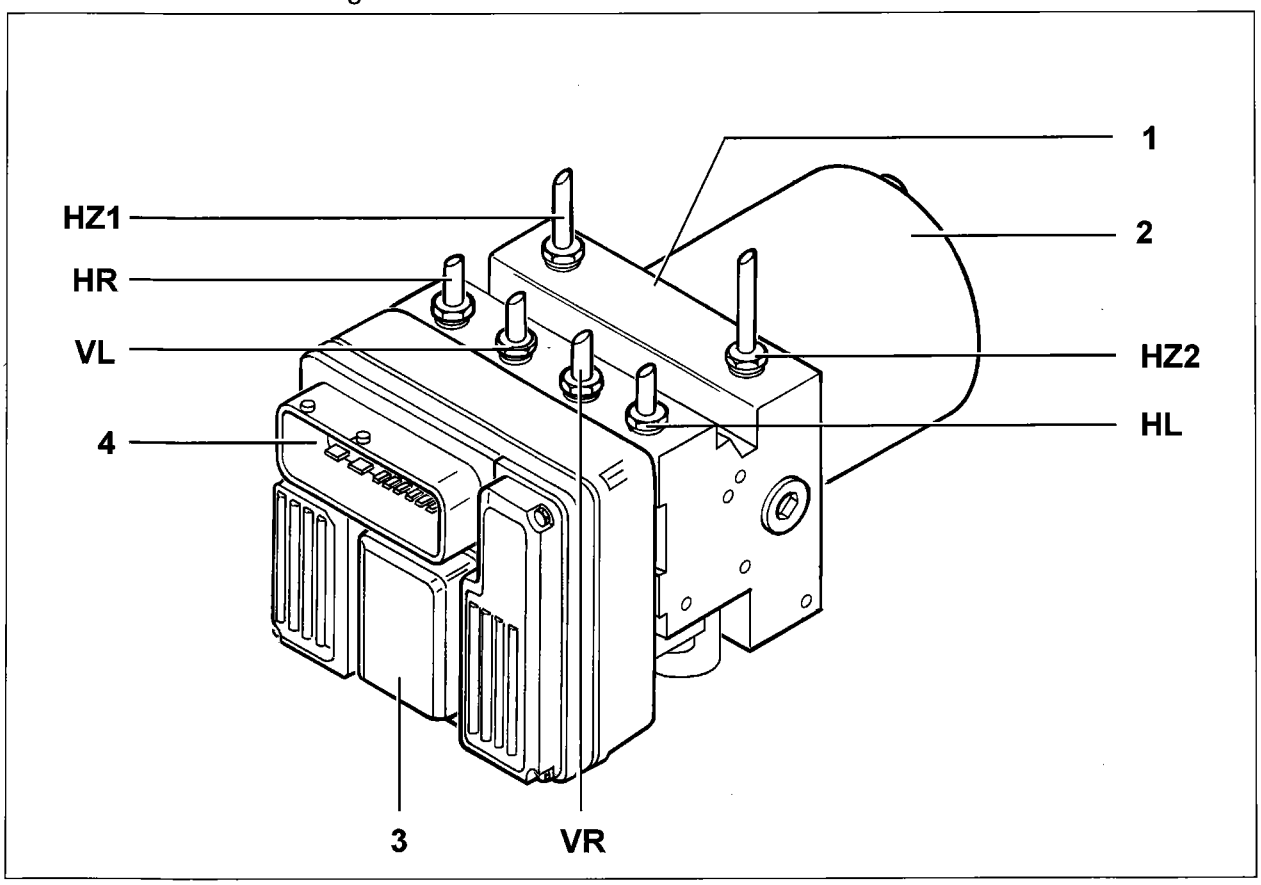

P4FO36D01

Components and identification of electro-hydraulic control unit outlets

HZ1 Supply connector from brake pump (Primary circuit) M12x1
HZ2 Supply connector from brake pump (Secondary circuit) M10x1
HR Right rear caliper supply connector M10x1
VL Left front caliper supply connector M12x1
VR Right front caliper supply connector M10x1
HL Left rear caliper supply connector M12x1
1. Electro-hydraulic control unit
2. Motor-recovery pump
3. Electronic control unit
4. Connector with 28 terminals

The control unit cannot be overhauled; if there is a problem it must be replaced as a whole.
It is available as spares filled with brake fluid (DOT 4).
The operation of bleeding and refilling the braking system is the same as for a conventional system.

NOTE *To prevent errors when connecting the various braking system circuits during service operations, the connections for the hydraulic modulator unit connections to the right and left branches of the circuit and to the main and secondary connections for the braking pump are different sizes (M 10x1 and M12x1), also the connectors can be identified by the codes as shown in the diagram.*
When the electro-hydraulic control unit has to be removed from the vehicle and moved, it should be kept in a vertical position (connections facing upwards) with the connections closed in order to prevent brake fluid from escaping.

Rpm sensors and flywheels

The rpm sensors provide the electronic control unit with all the information required for the electro-hydraulic control unit to be correctly operated.
They measure the driving speed, acceleration, deceleration and creeping of the wheels.
The sensors are the inductive type and are fitted in special housings, on the front and rear pillars.
Whilst two identical sensors are used for the front axle, the rear axle has two sensors, one left and one right, which are specular and therefore not interchangeable.

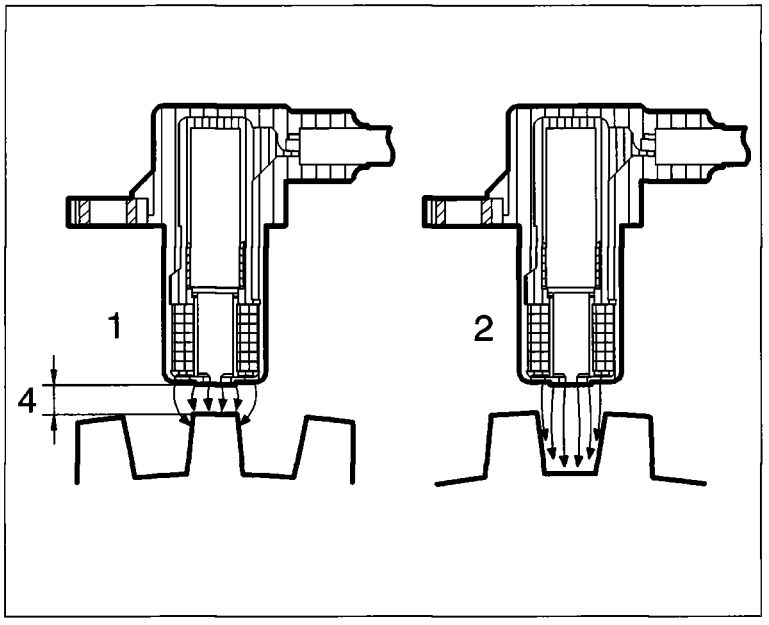

P4F037D01

Front sensor

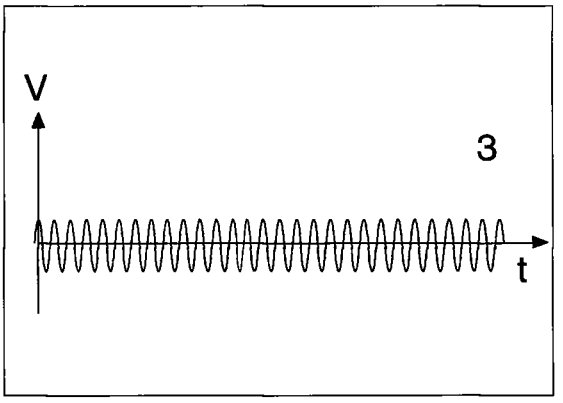

P4F037D02

1. Maximum mangnetic flow
2. Minimum magnetic flow
3. Progress of alternating voltage
4. Gap

The magnetic flow lines close towards the teeth of a toothed wheel (flywheel) facing the sensor which rotates with the wheel. Passing from a solid to a space, depending on whether or not there is a tooth, causes a variation in the magnetic flow sufficient to create an electro-motive force at the sensor terminals and consequently an alternate electrical signal for the electronic control unit.

Copyright by Fiat Auto

33.

The internal elements of the sensor (coil and permanent magnet) are completely immersed in a protective resin and surrounded by a plastic casing. A brass bushing, fitted in the sensor casing, fixes the latter without producing distortions.

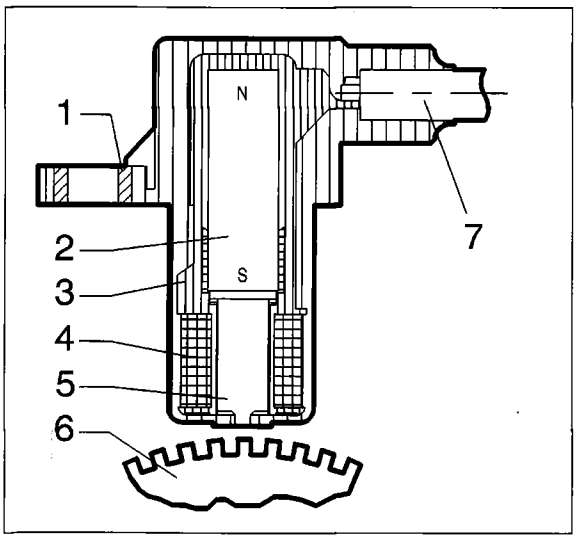

Front sensor

1. Brass metal bushing
2. Permanent magnet
3. Plastic sensor casing
4. Winding or coil
5. Polar core
6. Toothed wheel or flywheel
7. Co-axial cable or electrical connection

The correct distance (gap), to obtain correct signals, between the end of the sensor and the flywheel should be between:

0.645 - 1.305 mm for the front wheels (with the wheels raised off the ground)

0.060 - 1.180 mm for the rear wheels

This distance cannot be adjusted therefore if the value for the gap is outside of the tolerances, check the conformity of the sensor and the flywheel.
The electrical resistance expressed in Ohm inside the sensor is equal to:

1400 - 1200 Ohm for the front sensors

1650 - 1450 Ohm for the rear sensors

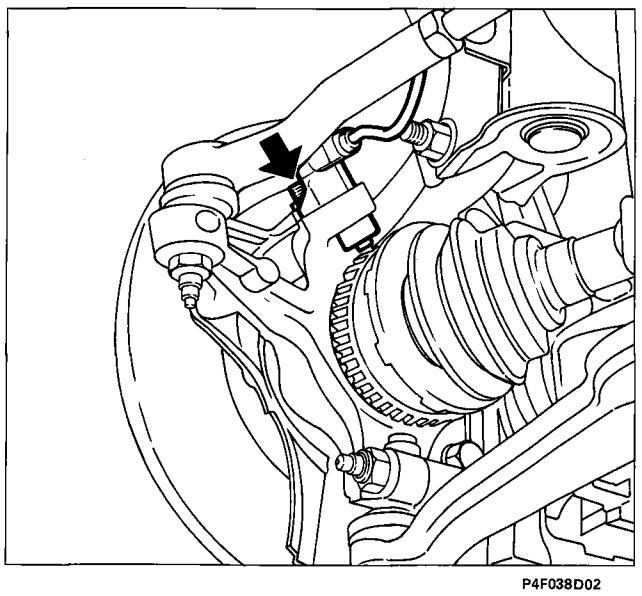

Positioning the front sensor

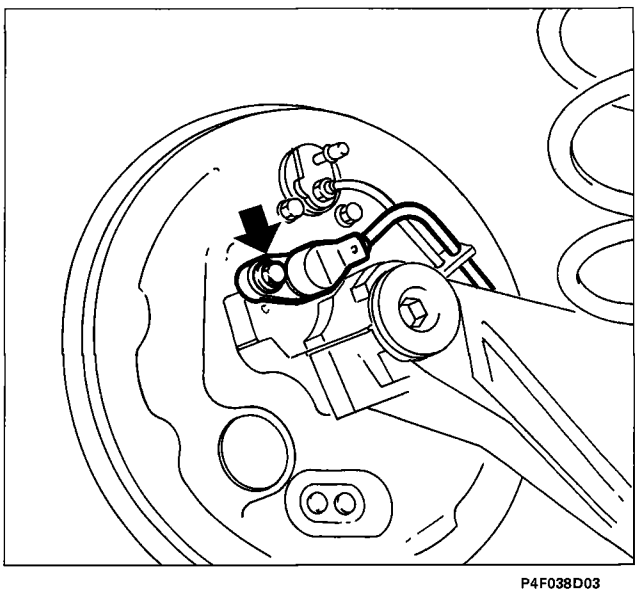

Positioning the rear sensor

The flywheels for the front wheels are a press fit on the wheel side constant velocity joints, whilst the ones for the rear wheels are a press fit on the wheel hubs and have 44 teeth.

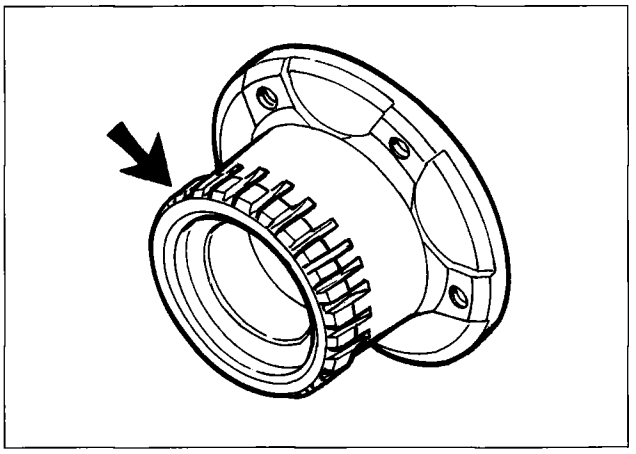

P4F039D02

Positioning flywheel for front wheel

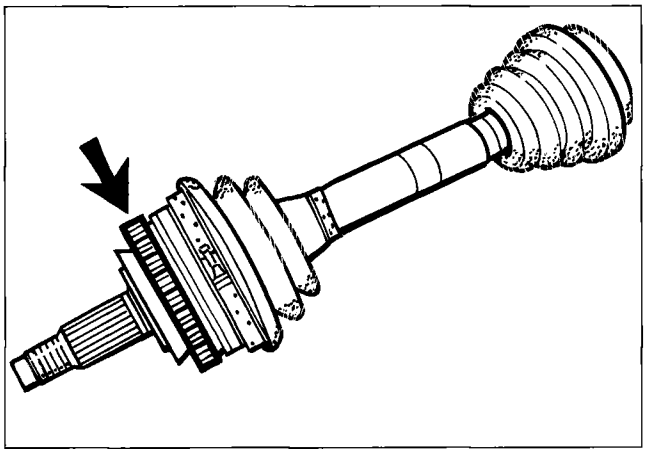

P4F039D01

Positioning flywheel for rear wheel

A.B.S. systaem failure warning light

The warning light used is the so-called "INTELLIGENT" type; it is no longer composed of a conventional type bulb, but an LED (D2) integrated with an electronic circuit as illustrated in the diagram.

This warning light has the capacity, when it comes on, of signalling not only the failure of the A.B.S. system, but also that the connector is not connected to the control unit (pin 18) or that the wire between pin 18 of the control unit (1) and pin 19 of the connector in the panel (2) is short circuited to earth.

In effect, the warning light, supplied by the voltage controlled by the ignition (+15), is only off if pin 19 of hte panel receives a 12V supply from the A.B.S. control unit.

With the ignition switch in the ON position, the A.B.S. system failure warning light (2), which is amber coloured, comes on.

After around 4 seconds (if the control system does not detect a fault), the warning light (2) goes out.

If the warning light (2) remains on then this means that there is a problem in one or more of the A.B.S. system components.

Under these circumstances the A.B.S. system is disabled and the conventional braking system only operates.

If the warning light (2) does not come on with the key inserted, then the problem should be sought in the actual warning light or in the electrical connection (+15) between the ignition switch and the warning light.

After starting, at a speed of 10 km/h, the system test system starts to operate.

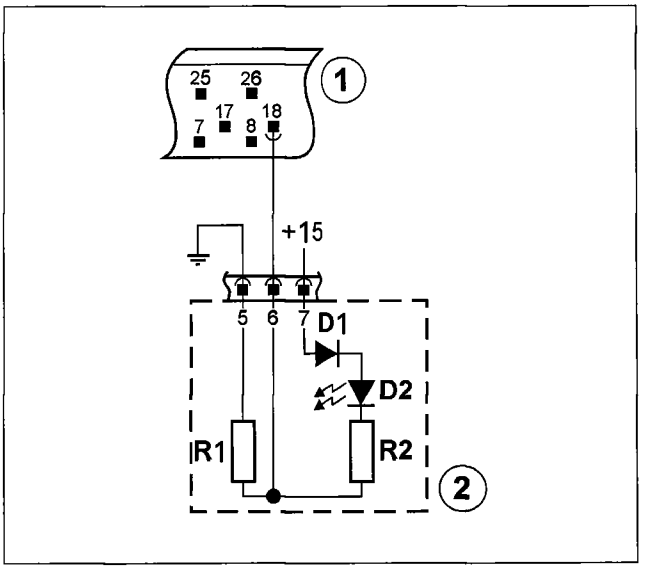

P4F039D03

D1: protective diode
D2: LED
R1 and R2: charge resistances

1) ABS control unit
2) Warning light

If the responses of the system components are positive, the warning light remains off.

If the response is negative, the warning light comes on and the system is de-activated.

33.

DIAGRAM AND DESCRIPTION OF OPERATION OF ANTI-LOCK BRAKES

The ABS "Lucas" F-DS system is the type which 4 channels and is "additional" to the conventional braking system with an "X" type circuit.
In future, for purposes of simplicity, the operation of a single channel will be dealt with and this description can be extended to the remaining ones.
When the service brake is operated (through the pedal) the master cylinder (1) creates a pressure which is transmitted without obstacles through the hydraulic unit (2) to the wheel brake (5).
The electronic control unit (3) integrated in the hydraulic unit (2) receives the four rpm sensor (4) signals as its main input information.
As soon as it recognizes that a wheel is locked, the control unit (3) activates the corresponding solenoid valve inside the hydraulic unit (2), thereby producing a reduction inpressure in the wheel-brake which gives rise to an adjustment process made up of successive pressure increase and decrease stages which last until the corresponding wheel no longer tends to become locked.

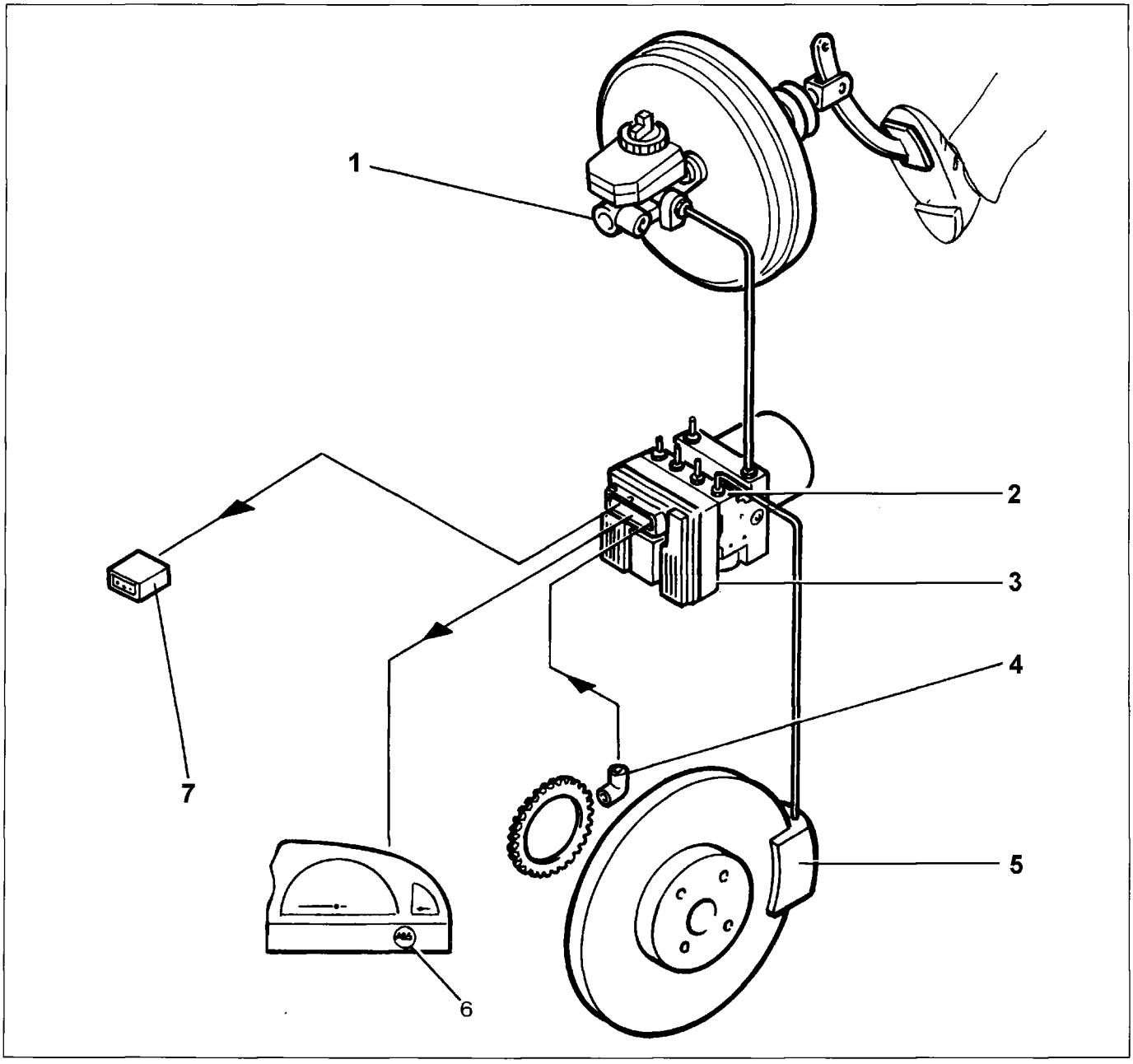

P4F040D02

1. Master cylinder
2. Hydraulic unit
3. Integrated electronic control unit
4. Rpm sensor
5. Wheel brake
6. ABS failure warning light
7. Diagnostic socket

If the control unit recognizes a fault in the ABS system, the system is switched off and the driver is informed by the ABS warning light coming on whilst the efficiency of the conventional braking system is unaltered.
The digram below shows the operating principle of the Lucas "Down Sized" A.B.S. braking system

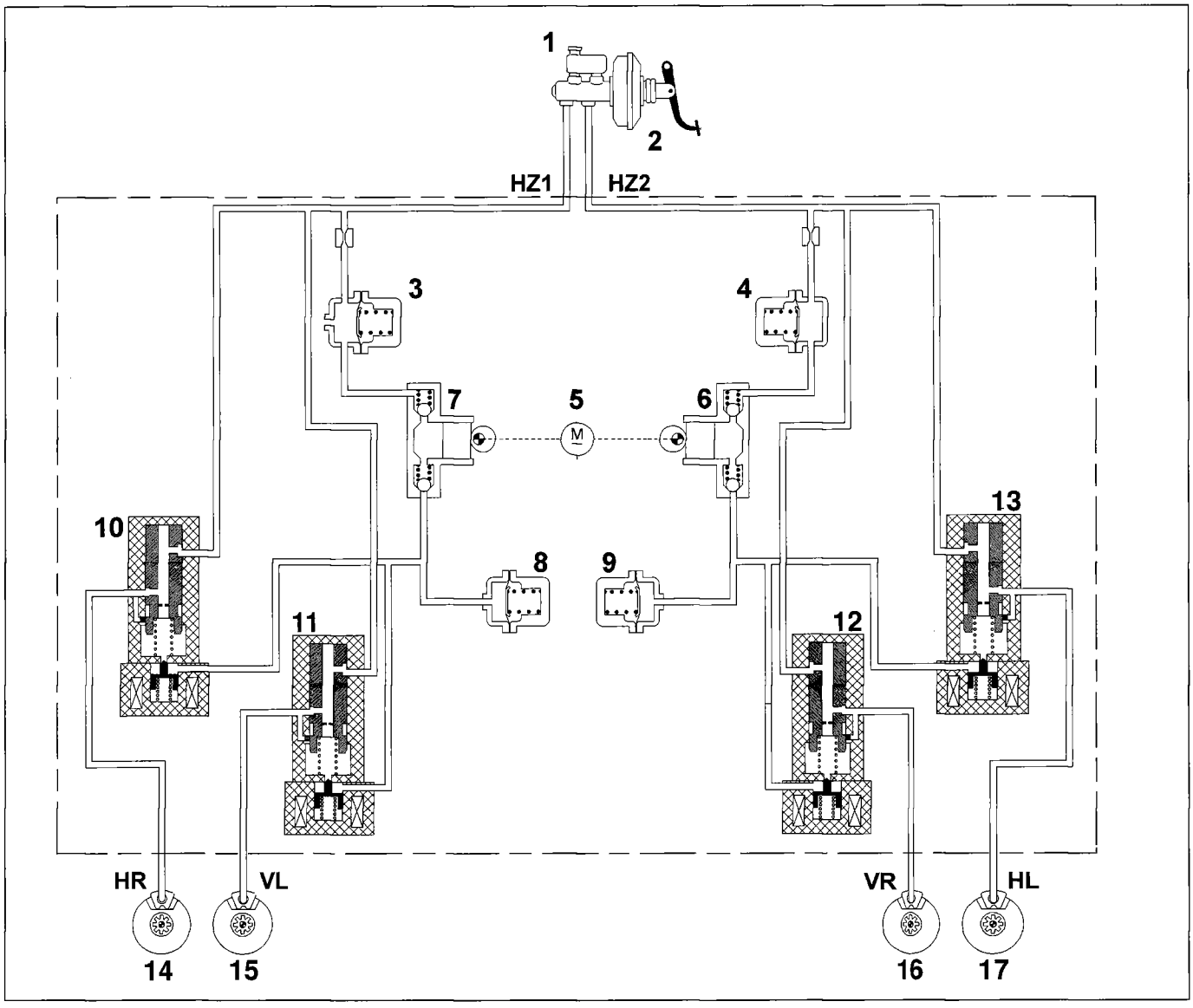

P4F040D01

1. Master cylinder
2. Brake servo
3. Silencer chamber
4. Silencer chamber
5. Recovery pump motor
6. Recovery pump
7. Recovery pump
8. Expansion chamber
9. Expansion chamber
10. Right rear flow valve
11. Left front flow valve
12. Right front flow valve
13. Left rear flow valve
14. Right rear brake caliper
15. Left front brake caliper
16. Right front brake caliper
17. Left rear brake caliper

HZ1. Master cylinder primary circuit supply connector
HZ2. Master cylinder secondary circuit supply connector

HR. Right rear brake caliper connector
VL. Left front brake caliper connector
VR. Right front brake caliper connector
HL. Left rear brake caliper connector

Copyright by Fiat Auto

33.

Rest position (Normal braking)(Diagram p/t Stage 1)
Unlike what takes place in ordinary ABS systems with two valves per channel, in this case the so-called "input" solenoid valve is replaced by a hydraulic valve (7) known as the "flow valve".
The "flow valve" is constructed in such a way that, when the system is not operational (i.e. when the dynamic conditions for the wheels do not require the intervention of the A.B.S. system), the regulator and all other hydraulic elements remain inactive.
In these circumstances the flow valve solenoid (16) does not electrically supplied by the electronic control unit (1), is closed and the flow valve (7) is in the rest position thrust by the spring (5).
As the hydraulic flow between the master cylinder (10) and the brake caliper (3) is not in any shuttered, the pressure in the circuit is directly proportional to the force applied by the brake pedal as illustrated in the diagram.

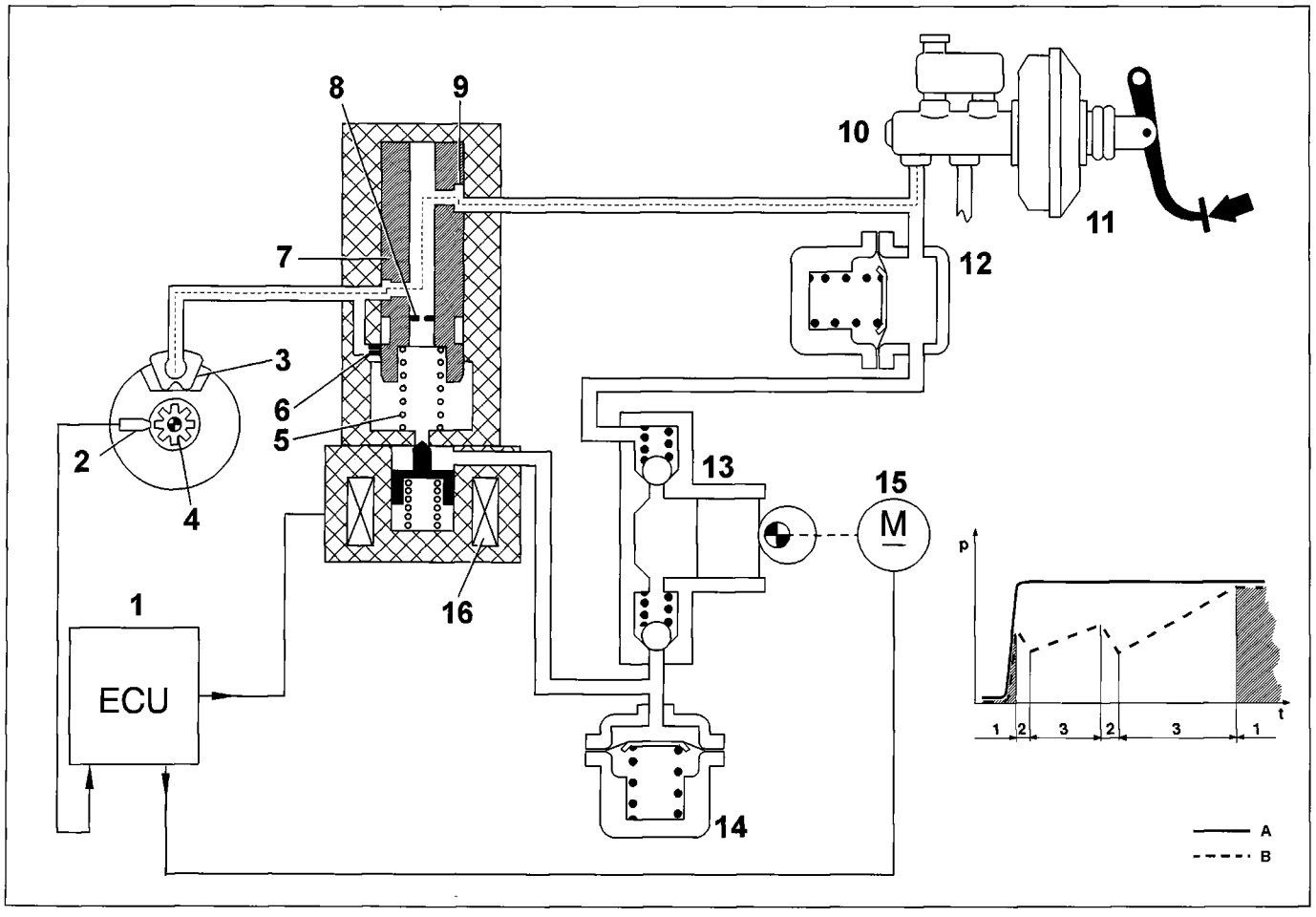

P4F041D01

A: Pressure in the master cylinder **B:** Pressure in the brake caliper circuit **p:** Pressure **t:** Time

1. Electronic control unit
2. Wheel rpm sensor
3. Brake caliper
4. Flywheel
5. Flow valve spring
6. Regulation edge
7. Flow valve
8. Orifice
9. Regulation edge
10. Master cylinder
11. Brake servo
12. Silencer chamber
13. Recovery pump
14. Expansion chamber
15. Recovery pump motor
16. Flow valve solenoid

Pressure reduction stage (Diagram p/t Stage 2)
When the braking force increases the deceleration of the wheel consequently increases: this produces a deceleration of the vehicle (which may cause the wheel to slip).
In order to prevent the loss of adhesion between the wheel and the ground, the slipping value should not exceeed a pre-set value; if this is not the case the wheel will lack direction and the braking distances will increase.
In these circumstances the rpm sensor (2) signals that the deceleration values reached are such as to adversely affect the grip of the wheel with the ground: at this point the electronic control unit (1) controls the activation of the solenoid (16) for the corresponding flow valve creating a difference in pressure through the aperture (8).
The difference in pressure, overcoming the reaction force which the spring (5) exerts on the flow valve (7), causes a movement which:
- interrupts the connection between the master cylinder (10) and the brake caliper (3);
- creates a connection between the brake caliper (3) and the expansion chamber (14).

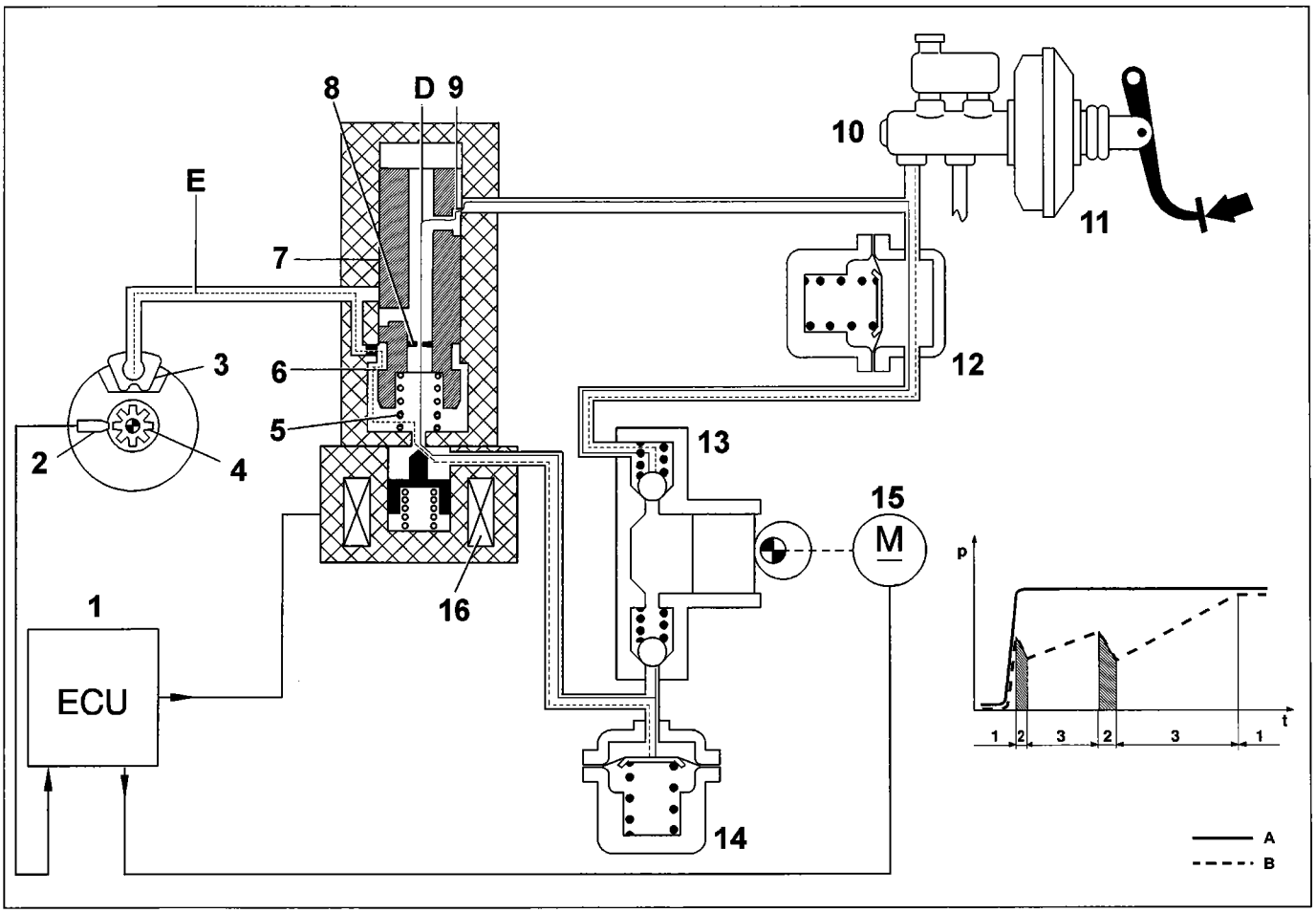

A: Pressure in the master cylinder **B:** Pressure in the brake caliper cylinder **p:** Pressure **t:** Time

1. Electronic control unit
2. Wheel rpm sensor
3. Brake caliper
4. Flywheel
5. Flow valve spring
6. Regulation edge
7. Flow valve
9. Regulation edge
10. Master cylinder
11. Brake servo
12. Silencer chamber
13. Recovery pump
14. Expansion chamber
15. Recovery pump motor
16. Flow valve solenoid

Copyright by Fiat Auto

The excess brake fluid (E) can therefore flow from the brake caliper (3) through the regulation edge (6) into the expansion chamber (14) with a consequent reduction in the value of the pressure in the brake caliper, as illustrated in the diagram.
At the same time as the supply of the solenoid (16) with the consequent opening of the flow valve (7), the electronic control unit (1) starts up the motor (15) and consequently the recovery pump (13) so that the brake fluid having flowed into the expansion tank (14) is returned, via the silencer chamber (12) and the master cylinder (10), to the brake fluid reservoir.
As long as the solenoid (16) keeps the flow valve (7) open and there is consequently a difference in pressure between the master cylinder (10) and the brake caliper (3), i.e. between the inlet and the outlet of the flow valve (7), the latter remains in the position illustrated and produces a constant flow (D) through the regulation edge (9).
The equilibrium condition in which the flow valve (7) finds itself is produced exclusively by the difference in pressure through the aperture (8) and the reaction force of the spring (5) and is not affected by the pressure created by the master cylinder (10) or that in the brake caliper (3).

Pressure increase stage (Diagram p/t Stage 3)

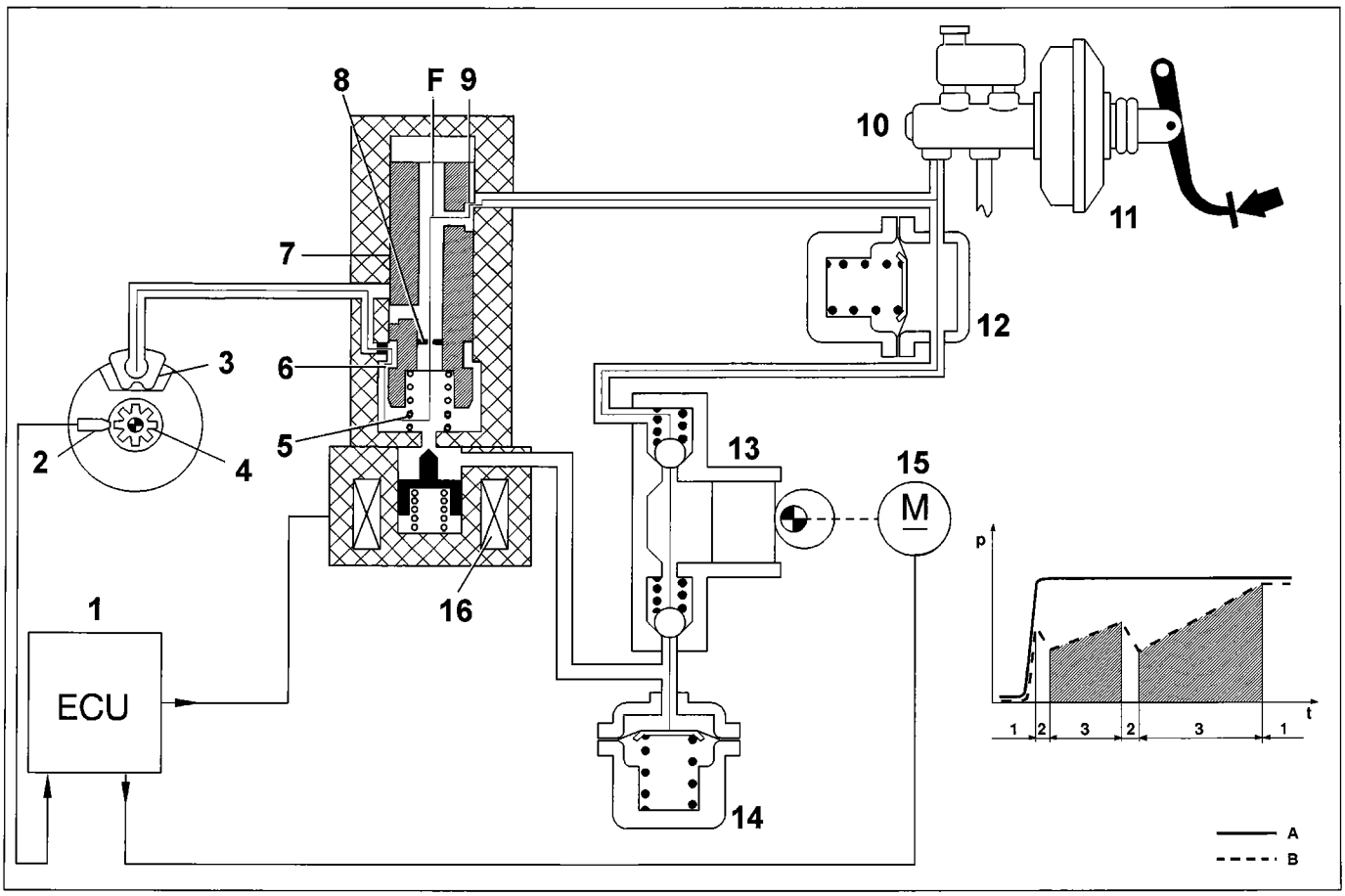

A: Pressure in the master cylinder **B:** Pressure in the brake caliper cylinder **p:** Pressure **t:** Time

1. Electronic control unit
2. Wheel rpm sensor
3. Brake caliper
4. Flywheel
5. Flow valve spring
6. Regulation edge
7. Flow valve
9. Regulation edge
10. Master cylinder
11. Brake servo
12. Silencer chamber
13. Recovery pump
14. Expansion chamber
15. Recovery pump motor
16. Flow valve solenoid

When, although the braking action produced by the pressure on the brake pedal by the driver persists, the slipping of the wheel goes below the critical value, i.e. the danger of the actual wheel locking no longer exists, the control unit (1) removes the supply from the solenoid (16) and the flow valve (7) closes.

In these circumstances the flow which is recalled by the pump (13) through the expansion chamber (14) passing through the valve (16) is interrupted.

Moreover, as there continues to be a difference in pressure between the master cylinder (10) and the brake caliper (3), the flow valve (7) remains in the same position and a constant volume flow (F) enters the brake caliiper consequently causing a gradual increase in pressure as illustrated in the diagram.

The pressure increases until the the sliding value for the wheel is once again close to the critical value which makes a pressure decrease stage necessary once again.

These pressure increase and decrease stages are repeated with a frequency of several cycles per sencond until the pressure in the brake caliper approaches a value which causes the wheel to lock.

When the pressure in the brake caliper (3) is restored to the same value as in the master cylinder (10), as there is no force capable of overcoming the action of the spring (5), the flow valve (7) returns to the rest position.

Copyright by Fiat Auto

WIRING DIAGRAM FOR LUCAS "Down Sized" A.B.S.

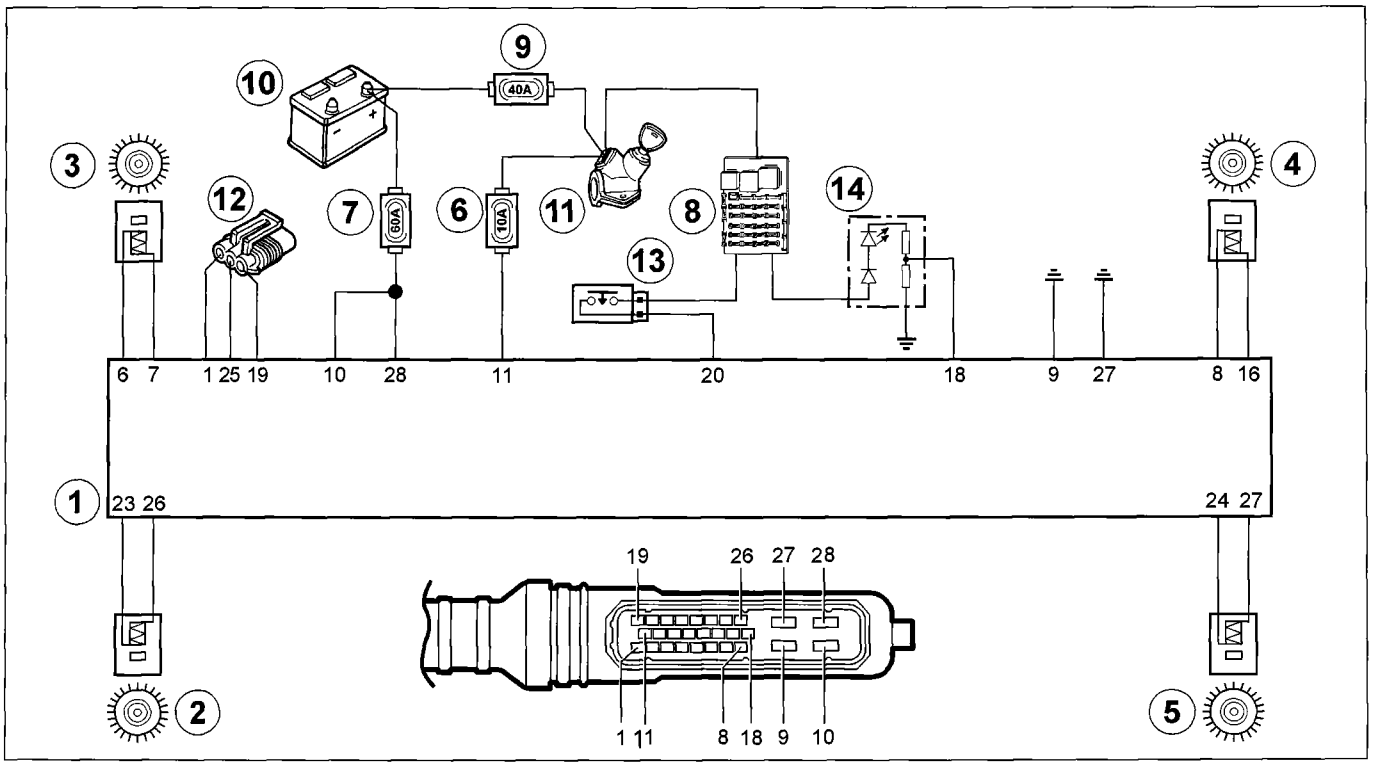

P4C045D01

1. Electronic control unit
2. Left rear rpm sensor (RL)
3. Left front rpm sensor (FL)
4. Right front rpm sensor (FR)
5. Right rear rpm sensor (RR)
6. Protective fuse 10A
7. Protective fuse 60A
8. Junction unit
9. Protective fuse for functions controlled by ignition key
10. Battery
11. Ignition switch
12. Diagnostic socket
13. Brake lights switch
14. A.B.S. warning light

N°	Cable colour	Destination	N°	Cable colour	Destination
1	BR	To the diagnostic socket line K	16	V	To the right front rpm sensor -
2	-	Spare	17	R	To the right rear rpm sensor -
3	-	Spare	18	CN	To the failure warning light
4	-	Spare	19	AB	To the diagnostic socket line L
5	-	Spare	20	RN	To the brake lights switch
6	M	To the left front rpm sensor +	21	-	Spare
7	B	To the left front rpm sensor -	22	-	Spare
8	M	To the right front rpm sensor +	23	G	To the left rear rpm sensor -
9	N	To the earth	24	M	To the right rear rpm sensor +
10	R	To the 60A battery positive +12V	25	N	Diagnostic socket earth
11	C	To the 10A fuse - terminal +15 of the ignition switch	26	M	To the left rear rpm sensor +
12	-	Spare	27	-	To the earth
13	-	Spare	28	R	To the 60A positive battery fuse +12V
14	-	Spare			
15	-	Spare			

Identification of terminals at electronic control unit and connectors

The electrical system for the Lucas "Down Sized" A.B.S. system is special; the electrical connections between the individual components such as the wheel rpm sensors, the failure warning light, the brake lights switch, the diagnostic socket, the supplies, etc. are joined to form a cable loom which has a multiple connector with 28 terminals.
The installation of this cable loom is protected against water, because the presence of oxidation or corrosion could give rise to high contact resistances; there could be a drop in voltage in certain cables (compared with the electronic control unit) which could causethe malfunction of the entire system and therefore cause it to be switched off or cause the limited operation of the electro-magnetic valuves and the recovery pump which would result over a prolonged period in a reduced capacity.

The electronic unit (1) is supplied directly by the battery (10) thanks to:
- a 60A fuse (7), positioned as illustrated in the diagram, on the right side of the engine compartment protected by a cover, connected to terminals (10) and (28);
- the ignition switch (11) through the 10A fuse (6) housed near the lamp on the right side of the engine compartment and protected by a cover, connected to the terminal (11). The earth is connected to terminals (9) and (27).

There are two relays in the control unit which cannot be replaced but, precisely for this reason, are guaranteed to work; one allows the supply of the four flow valves according to the commands of the micro-processors, the other allows the supply of the recovery pump, alwasy on the command of the micro-processor.

The circuit for the switch on the brake pedal closes at the control unit through the connection (2) when the brake pedal is pressed; this connection assists the electronic control unit in controlling the braking in certain conditions.

As this connection does not adversely affect the correct operation of the system, any irregularities are not signalled by the warning light coming on.

The amber coloured failure warning light, located in the control panel, is supplied by the ignition switch (+15) and the A.B.S. control unit (pin 18); it remains on as commanded by the micro-processor if a failure is confirmed to notify the user that the A.B.S. is disabled and therefore only the conventional braking system is operating; in addition its coming on indicates any irregularities in the electrical connections for the warning light itself.

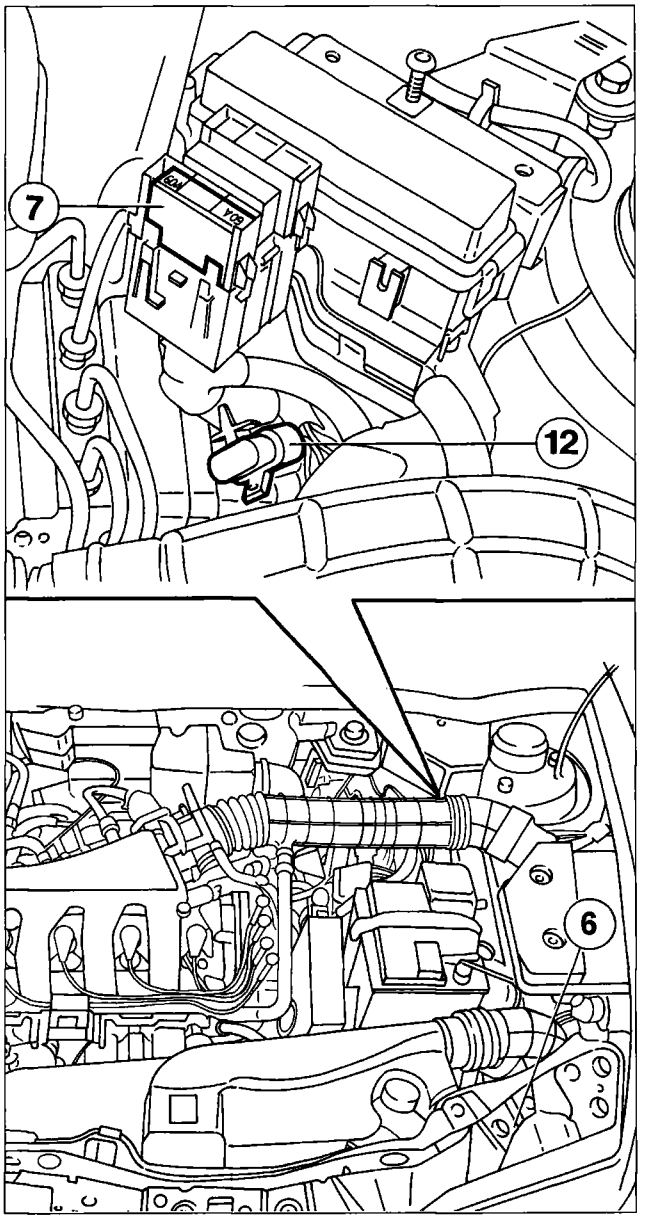

P4F046D01

6) 10A ABS protective fuse
7) 60A ABS protective fuse
12) Diagnostic socket

FAULT DIAGNOSIS

The fault diagnosis may be only be activated with the vehicle stationary

It is possible to search for and identify any defects in the Lucas A.**B**.S. system by connecting one of the following instruments to the diagnostic socket illustrated in the diagram on the previous page:

- Fiat-Lancia Tester
- S.D.C.-Computerized Diagnosis Station
- Examiner

When the Tester is connected, the A.**B**.S. system is disabledand the failure warning light remains on.
If the control unit detects a fault, the system is disabled and the failure warning light comes on. This defect is recorded in a permanent memory and this error is cancelled, after the fault has been eliminated, by the Tester at the end of the diagnosis or automatically after the engine has been started up 20 times.
If there are several errors, the control unit is capableof memorizing up to six different codes.

PRECAUTIONS TO BE OBSERVED ON VEHICLES FITTED WITH ANTI-LOCK BRAKES

Before carrying out welding operations using electrical welders, the connector should be disconnected from the electronic control unit.
If the battery is being removed, when refitting it the terminals should be properly tightened.
In order to replace the electronic control unit it is necessary to remove the entire hydraulic unit, for reasons of space and in order not to damage the internal connector.
Before proceeding with the removal of the electro-hydraulic control unit, the negative lead should be disconnected from the battery.
For painting operations, the electronic control unit can withstand temperatures of up to 80°C.
Every time after a hydraulic unit, rpm sensor, electronic control unit or wires are replaced (especially following an accident) the A.B.S. system should be checked using the Tester.
After any operation to the A.B.S. system hydraulic circuit or the braking system, it should be filled with DOT 4 brake fluid and bled and all the connecting point seals checked.
The hidraulic control unit is supplied filled with DOT 4 brake fluid. The operation of bleeding and filling the braking system is the same as for a conventional braking system, but takes longer
Check that the pipes are not, at any point, in contact with the bodyshell in order to avoid not only the danger of damage to the protection of the actual pipes, but also the transmission of noise during the opertion of the A.B.S. If it is necessary to loosen/remove the connecting pipes, after refitting them the system must be checked for leaks.

Do not introduce mineral oil into the braking system because ail the seals will be damaged. In the case of accidental introduction, replace: the hydraulic unit, brake pump and calipers

PRECAUTIONS TO BE OBSERVED DURING REPAIR OPERATIONS INVOLVING ANTI-LOCK BRAKING SYSTEM COMPONENTS

After any repair operation which has involved the electrical system of the anti-lock brakes or the rpm sensors, both for specific operations and the removal and replacement of mechanical components (for example the spring-shock absorber assembly, constant velocity joints, drive shafts and wheel hubs), a very short road test has be carried out as follows:

1. Let the vehicle reach a speed above 12 km/h and maintain this speed in order to allow the electronic control unit to carry out the dynamic check of the sensors and detect any possible defects, loose contacts, incorrect positionings or the possible absence of a flywheel.
2. After having carried out the previous operation, if there are no signs of problems indicated by the warning light, continue with the test at a speed of 50 - 60 km/h for 10 minutes, using the brakes normally but avoiding sharp braking. This stage allows the electronic control unit to recognize the presence of any possible inappropriate flywheel.

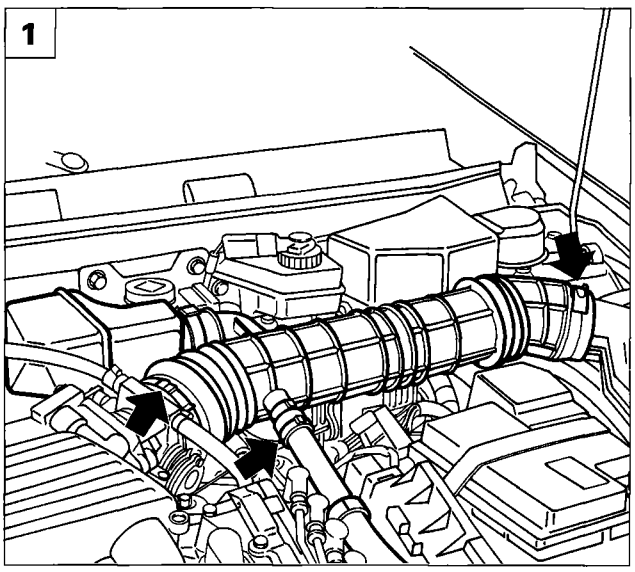

P4F048D01

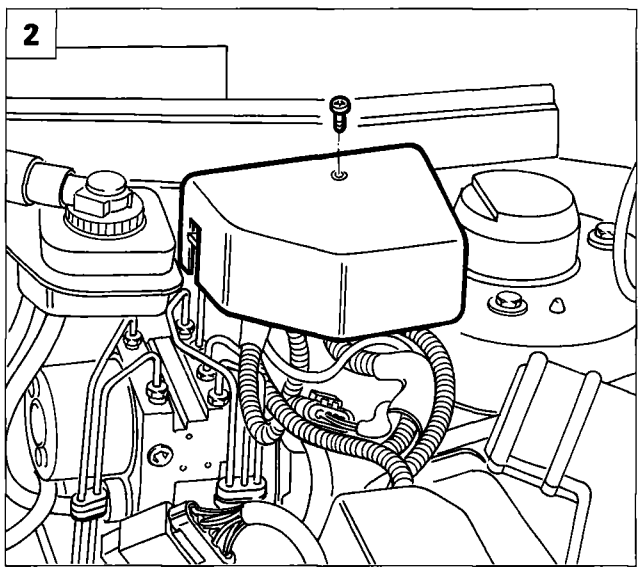

P4F048D02

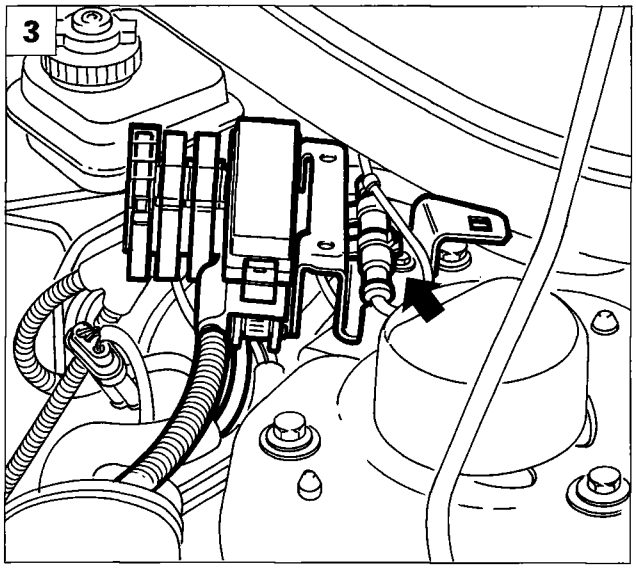

P4F048D03

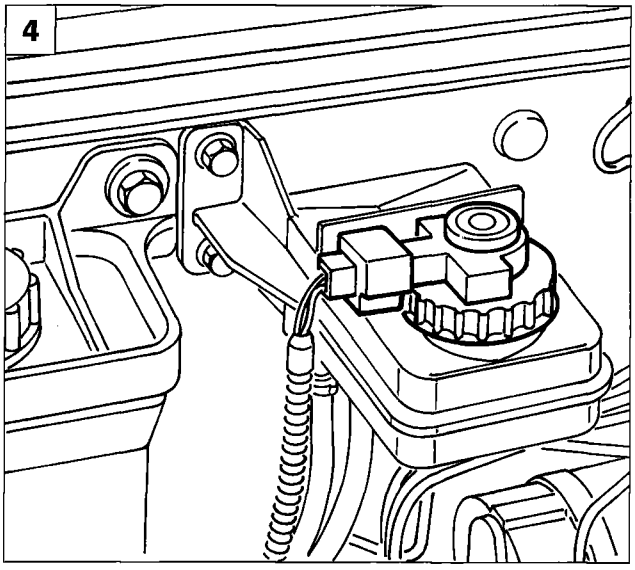

P4F048D04

REMOVING-REFITTING ANTI-LOCK BRAKING SYSTEM COMPONENTS

Electro-hydraulic unit

After having disconnected the negative lead from the battery, proceed with the removal of the electro-hydraulic unit by carrying out the following operations:

1. Remove the complete air inlet duct, acting on the retaining bands shown in the diagram.
2. Remove the protective cover for the fuses and relays.
3. Release the connector for the rpm sensor, then undo the nut fixing the mounting bracket for the fuses and relays and place it at the side.
4. Disconnect the connector for the brake fluid level sensor from the reservoir cap, then undo the actual cap.

Copyright by Fiat Auto

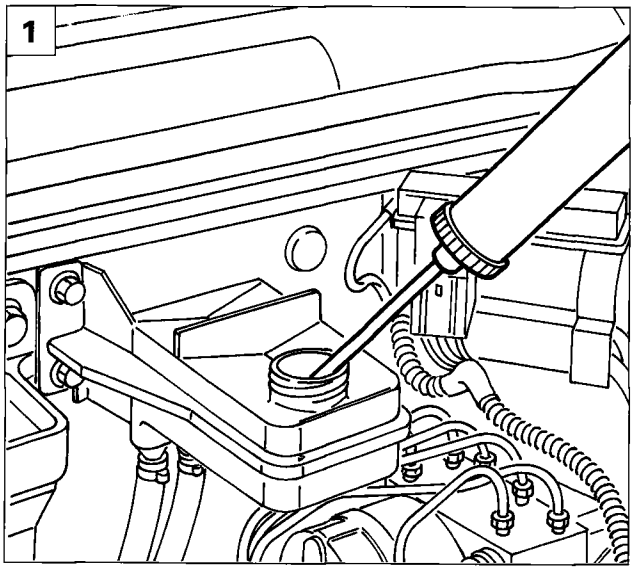

P4F049D01

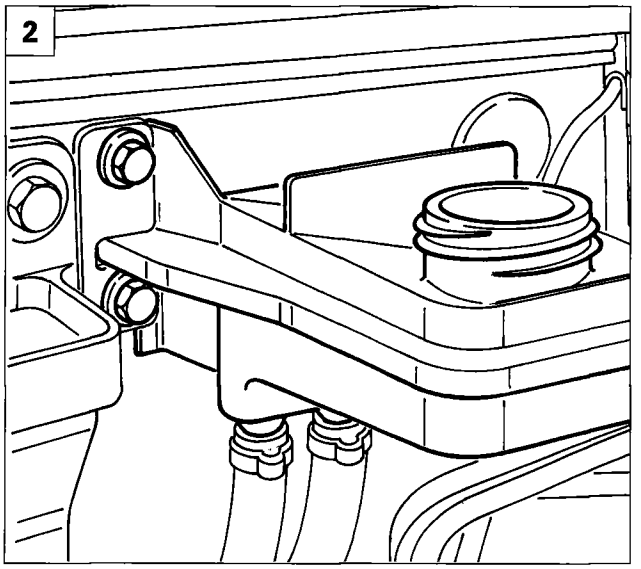

P4F049D02

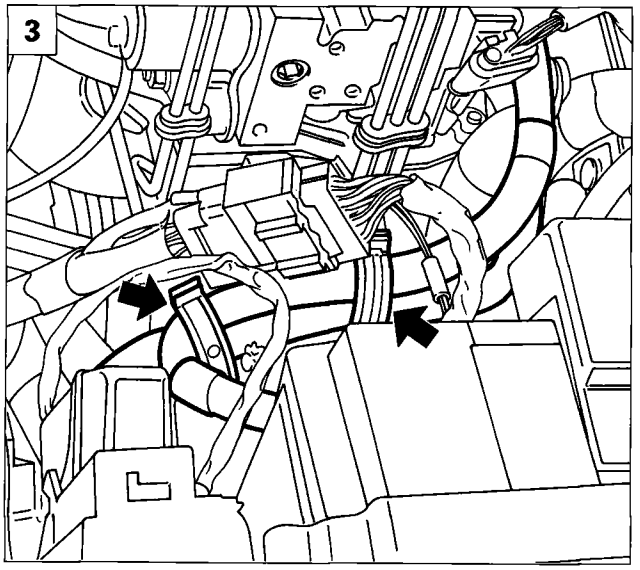

P4F049D03

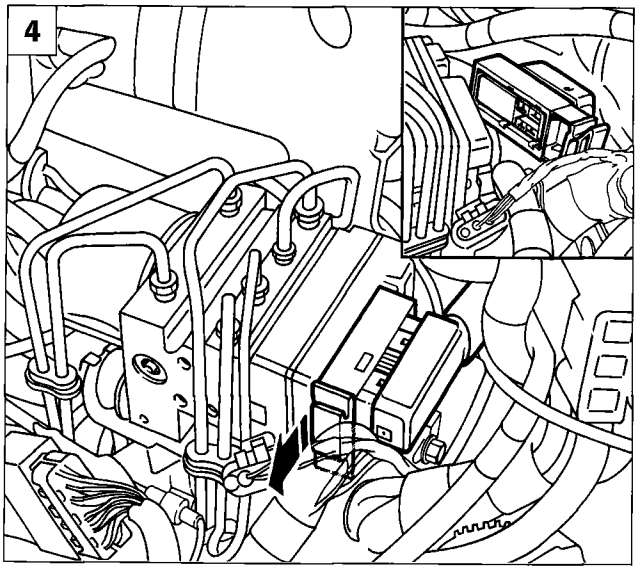

P4F049D04

1. Remove the brake fluid from the reservoir using the special syringe.

Take care over the remaining brake fluid in the reservoir coming out. Avoid it coming into contact with the painted areas of the vehicle.

2. Undo the bolts fixing the brake fluid reservoir to the partition between the passenger compartment and the engine compartment; place the actual reservoir to the side.

Before refilling the reservoir, make sure that it is perfectly clean.

Bleeding hydraulic system

3. Disconnect the cables shown in the diagram from the retaining bands to allow the removal of the supply connector for the electro-hydraulic unit.
4. Disconnect the supply connector for the electro-hydraulic unit by pulling the attachment device in the direction of the arrow.

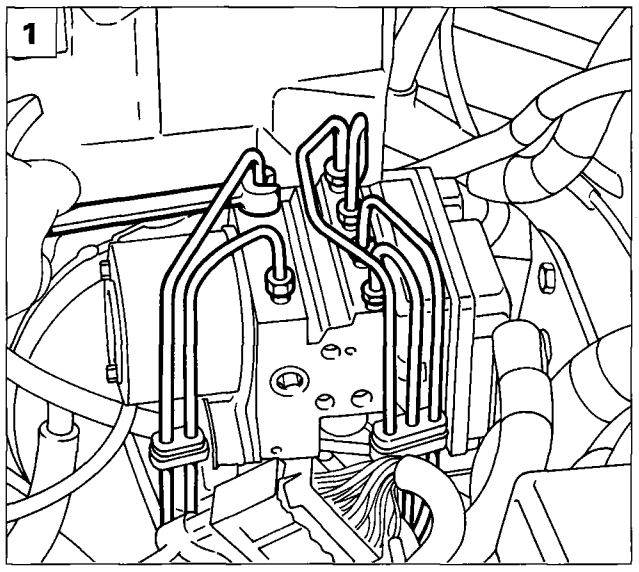

P4F050D01

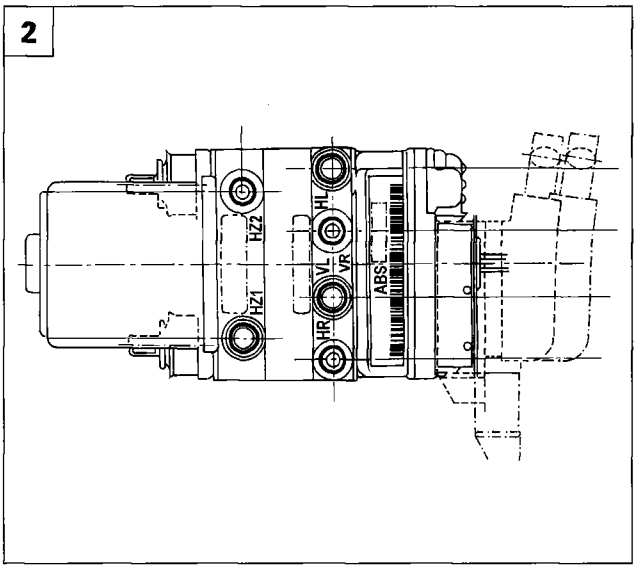

P4F050D02

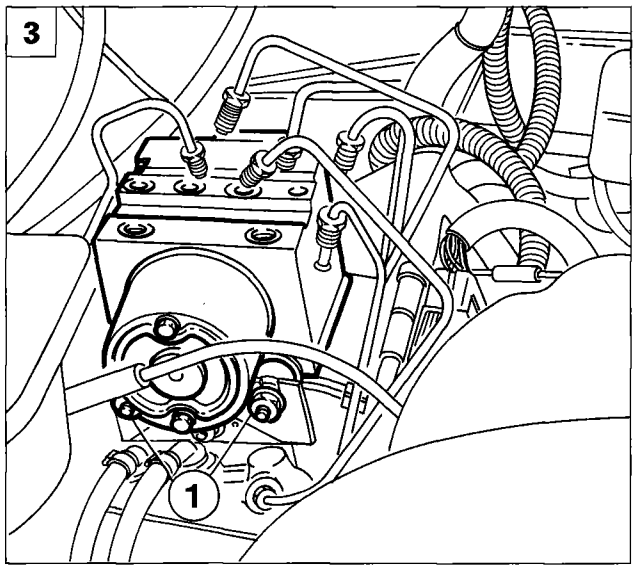

P4F050D03

1-2. Undo the connectors for the brake pipes using spanner 18561320 for the 11 mm connectors (HR - VR - HZ2) and *a* fixed spanner for the 13 mm connectors (VL - HL - HZ1).

Take care not to damage the brake pipe connectors.

3-4. Move the brake pipes aside, then loosen the front nuts (1) and the rear nut (2) fixing the electro-hydraulic unit, then remove it from the engine compartment.

5. Electro-hydraulic control unit.

NOTE *When refitting reverse the order of the operations carried out for the removal.*

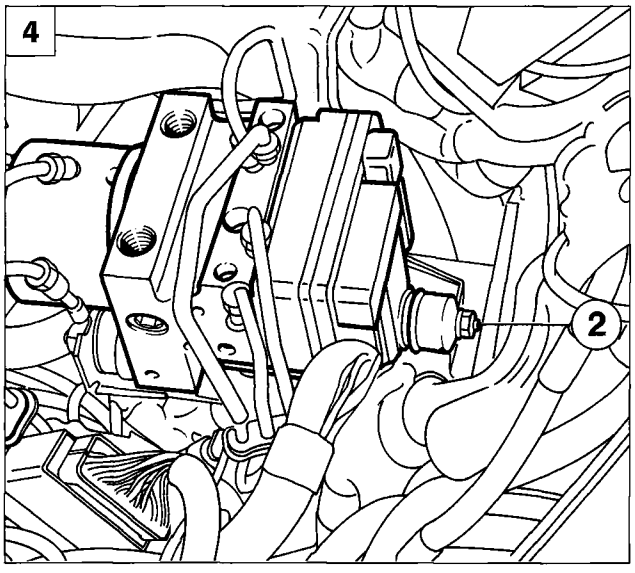

P4F050D04

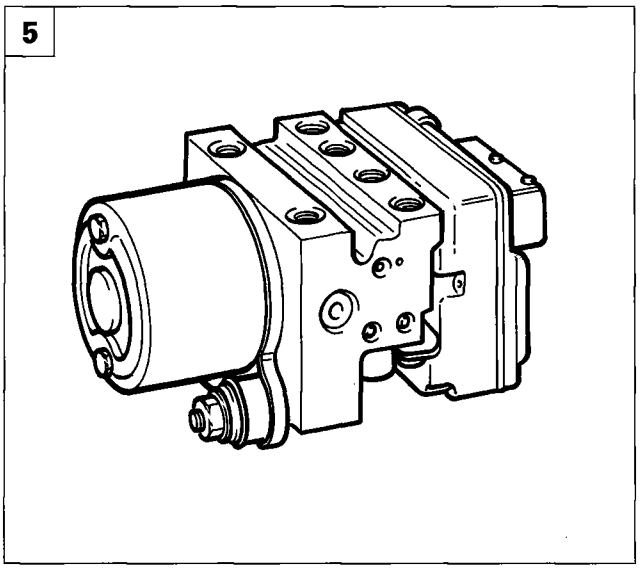

P4F050D05

Copyright by Fiat Auto

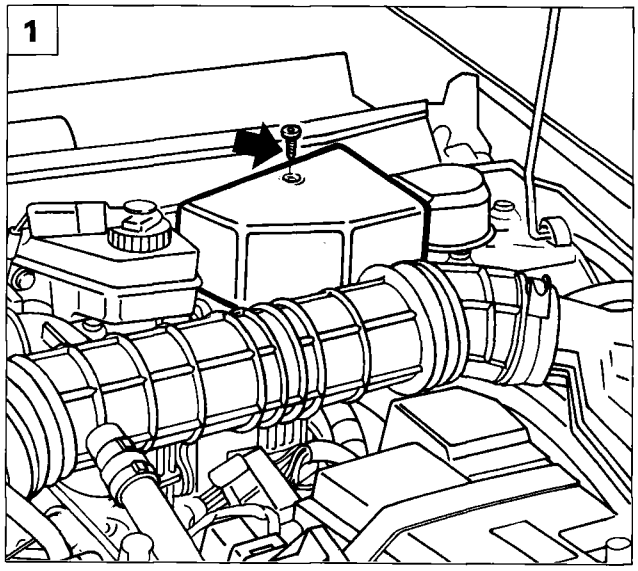

P4F051D01

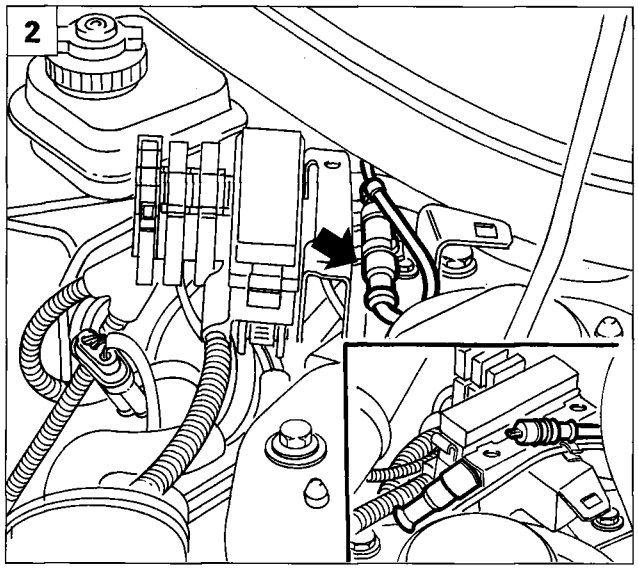

P4F051D02

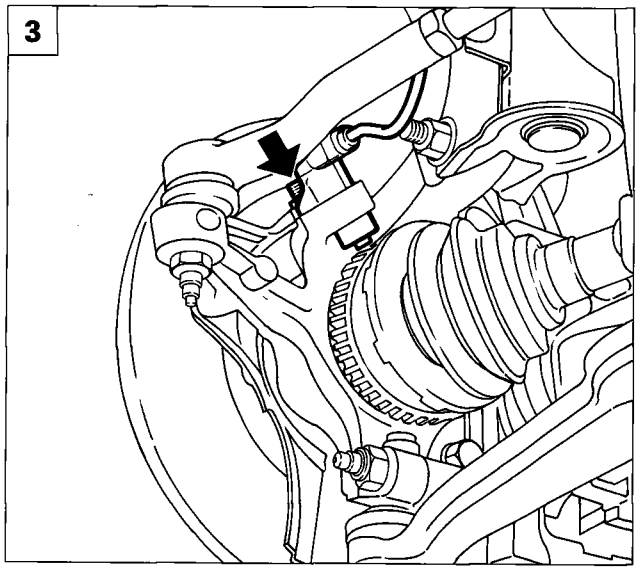

P4F038D02

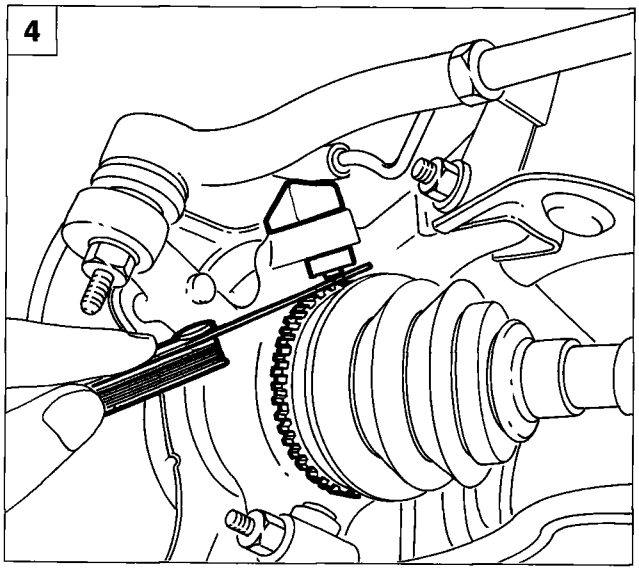

P4F051D03

Rpm sensor for front wheel

Proceed with the removal of the rpm sensor for front wheel by carrying out the following operations:

1. Remove the protective cover for the fuses and relays.
2. Disconnect the electrical connection for the rpm sensor.
3. Undo the bolt fixing the sensor, then remove it after having released it from the mounting brackets.
4. Check the value of the gap between the rpm sensor and the flywheel on the front wheel constant velocity joint.

The gap cannot be adjusted because no suitable shims are supplied for this purpose. Therefore if the value is outside of the recommended tolerance, check the condition of the sensor and the flywheel teeth.

0,645 ÷ 1,305 mm **(with wheels raised off the ground)**

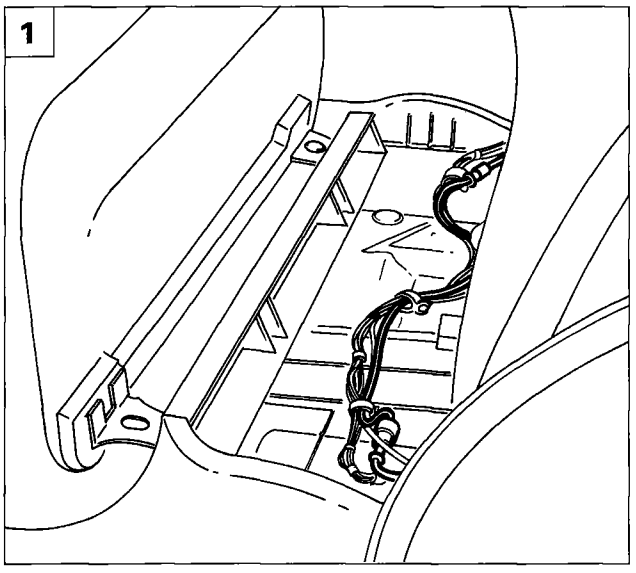

P4F052D01

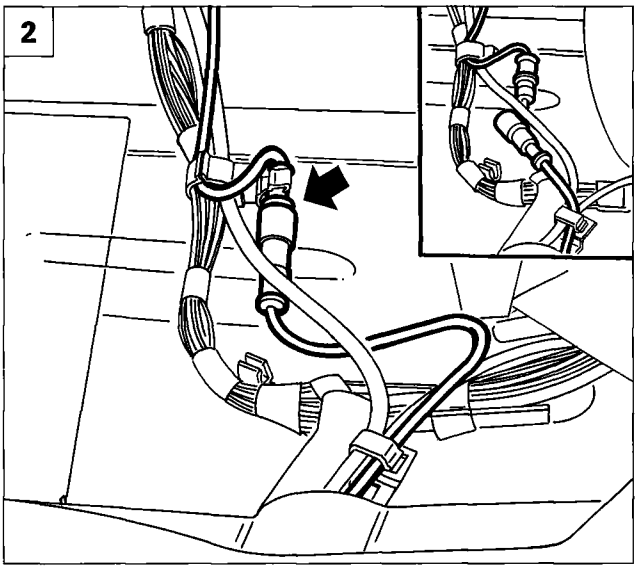

P4F052D02

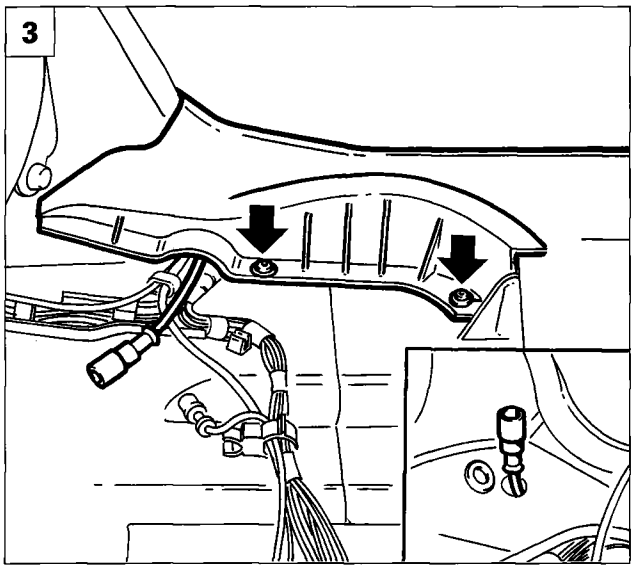

P4F052D03

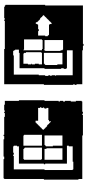

Rpm sensor for rear wheel

Remove the rear wheel rpm sensor by carrying out the following operations:

1. Turn over the cushion for the rear seat and lift up the sound-proofing lining to gain access to the connector for the rear rpm sensor.
2. Disconnect the connector for the rear rpm sensor.
3. Remove the plastic cover shown in the diagram to allow the removal of the connector through the hole in the floor of the vehicle.
4. Raise the vehicle, then remove the shield shown in the diagram; to remove the right rear sensor it is necessary to remove the fuel filter shield.
5. Extract the rubber seal, release the cable for the sensor from the fixings, then remove the actual cable.

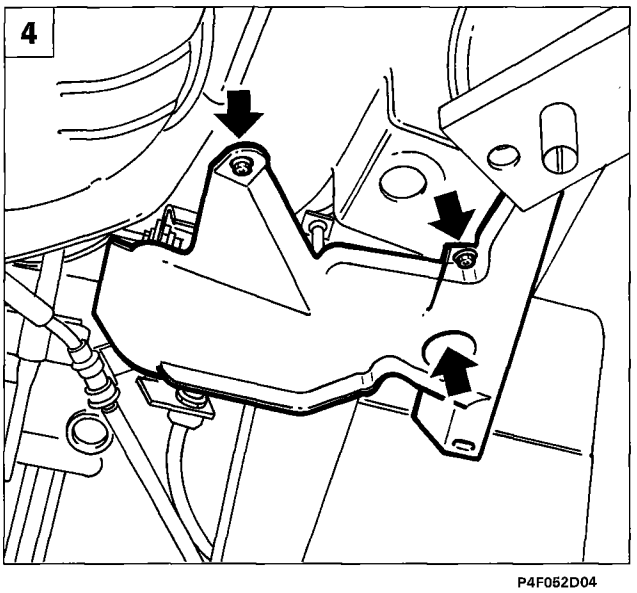

P4F052D04

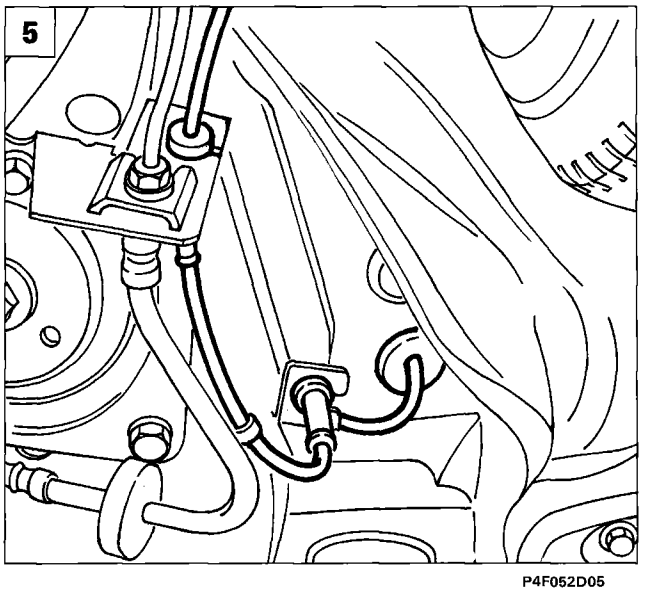

P4F052D05

Copyright by Fiat Auto

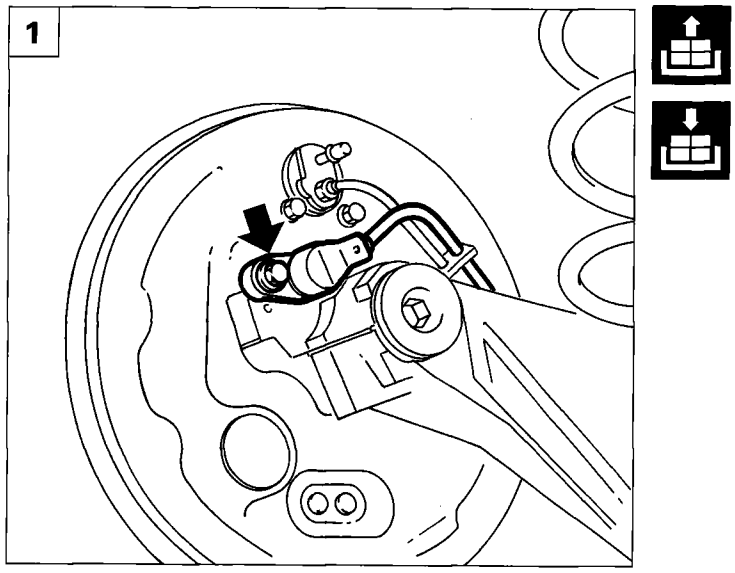

P4F038D03

1. Undo the bolt fixing the rear rpm sensor and remove it.

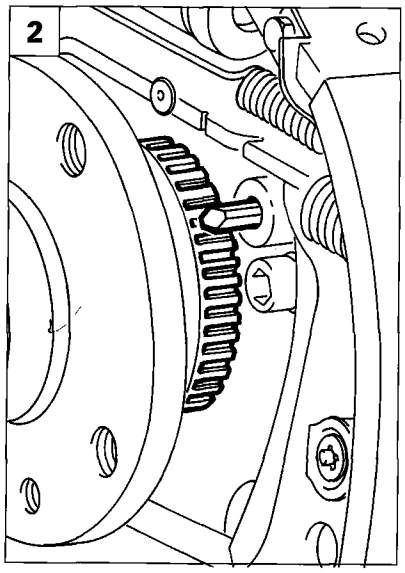

P4F053D01

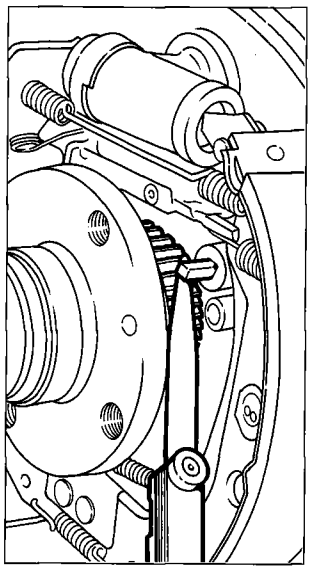

P4F053D02

0,06 ÷ 1,18 mm **(with wheels raised off the ground)**

12v 16v 16v TD

2. For vehicles with rear drum brakes the actual drum has to be removed to check the value of the gap between the rpm sensor and the flywheel on the rear wheel hub.

0,06 ÷ 1,18 mm **(with wheels raised off the ground)**

20v TD

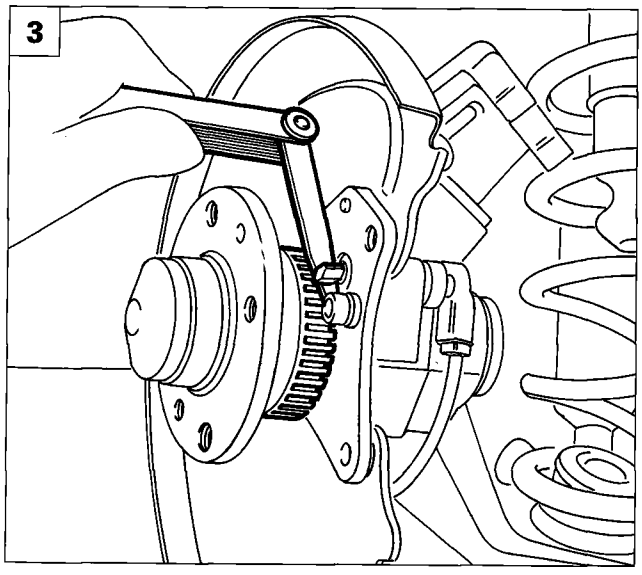

P4F053D03

3. For vehicles with rear disc brakes to check the value of the gap between the rpm sensor and the flywheel on the rear hub it is necessary to:
   - disconnect the handbrake cable;
   - remove the brake caliper and support (without disconnecting the brake pipes);
   - remove the brake disc.

The gap cannot be adjusted because no suitable shims are available for this purpose, therefore if the values is outside of the recommended tolerance, check the condition of the sensor and the flywheel teeth.

page

UPPER STEERING SYSTEM

- Steering wheel 1
- Stalk unit base 2
- Steering column 3
- Ignition switch block 4

POWER-ASSISTED STEERING

- Description and operation 5
- Front wheel toe-in 7

POWER-ASSISTED STEERING GEAR

- Rack-and-pinion power steering gear 8
- Removing-refitting fluid return pipe to reservoir 12/1

POWER STEERING PUMP

- 1370 12v engine 13
- 1581 16v engine 16
- 1747 16v engine 18
- 1998 20v engine 21
- 2387 TD engine 23
- 1910 TD engine 25

Copyright Fiat Auto

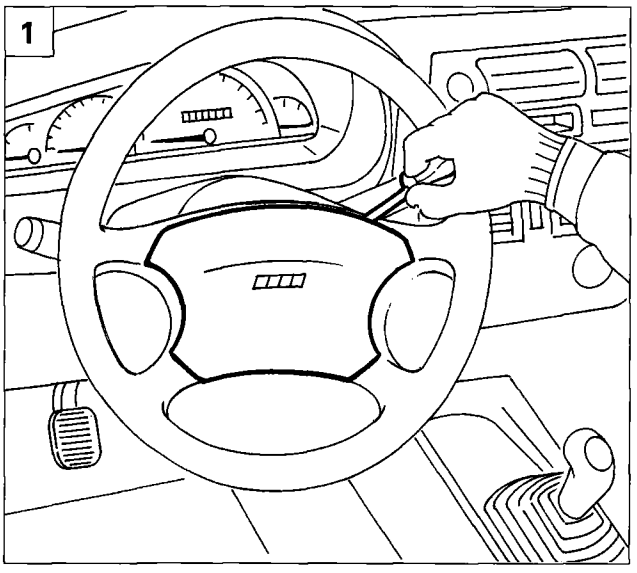

P4F001F01

STEERING WHEEL

Removing-refitting

To remove the steering wheel, proceed as follows:

1. using a screwdriver, prise off the horn push cover;

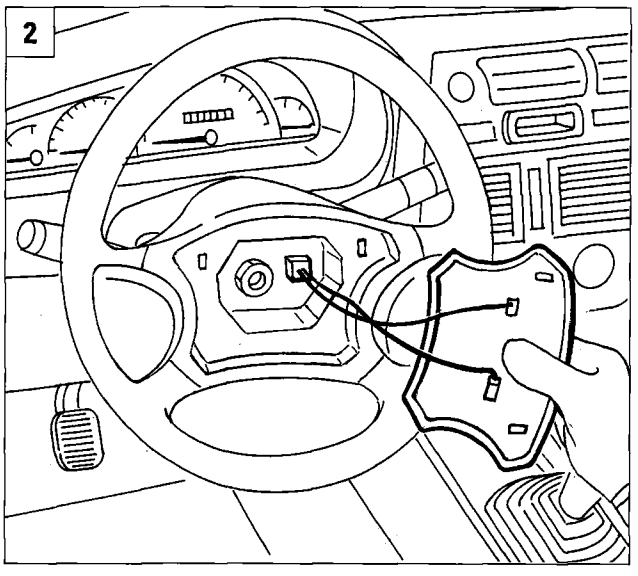

P4F001F02

2. disconnect the horn connectors;
3. undo the nut securing the steering wheel to the steering column, then remove the steering wheel.

To remove the steering wheel on vehicles fitted with AIR BAGS, see the procedure described in Sec. 55.

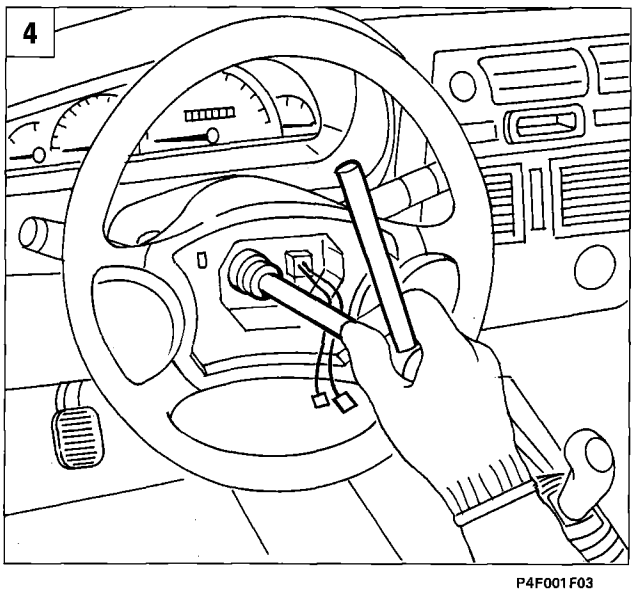

P4F001F03

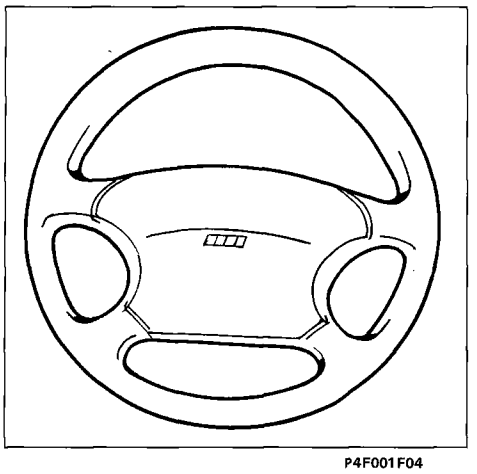

P4F001F04

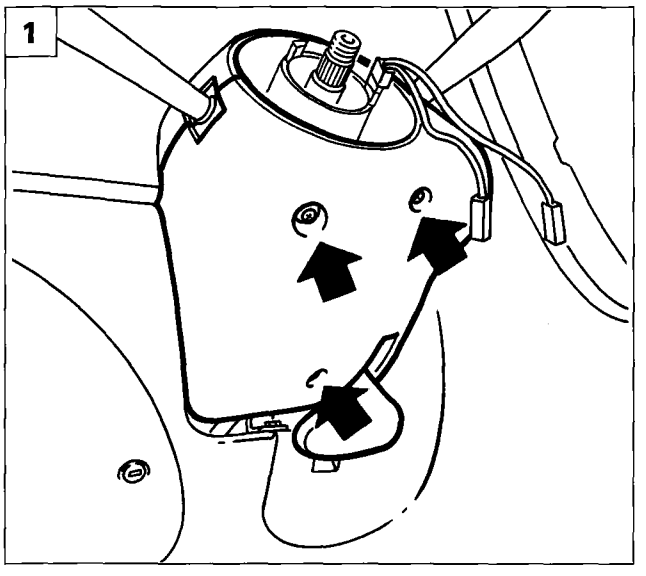

P4F002F01

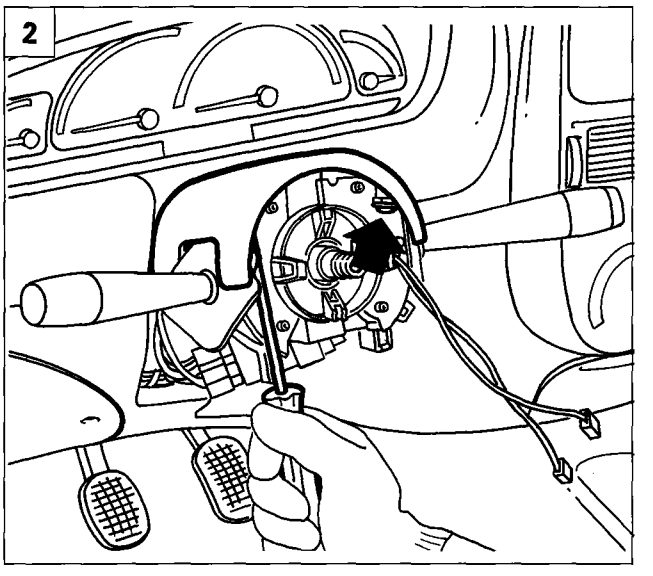

P4F002F02

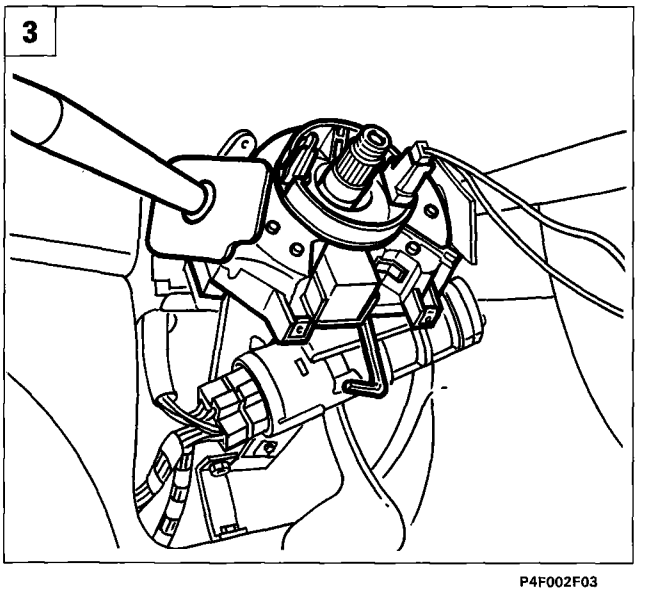

P4F002F03

STALK UNIT BASE

Removing-refitting

To remove the stalk unit base, proceed as follows:

1. undo the screws indicated and remove the steering column bottom shroud;
2. undo the screws indicated and remove the steering column top shroud;
3. using an Allen key, undo the screw on the collar securing the stalk unit base, and withdraw the latter;
4. disconnect the electrical connectors of the stalk unit base and remove it.

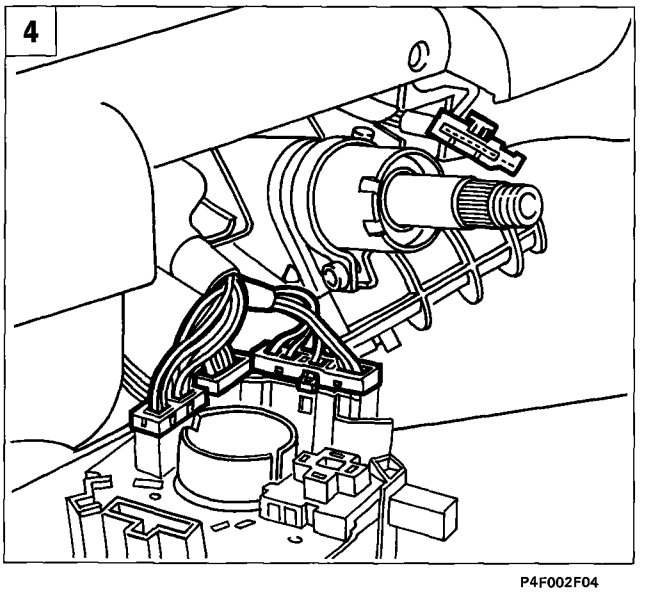

P4F002F04

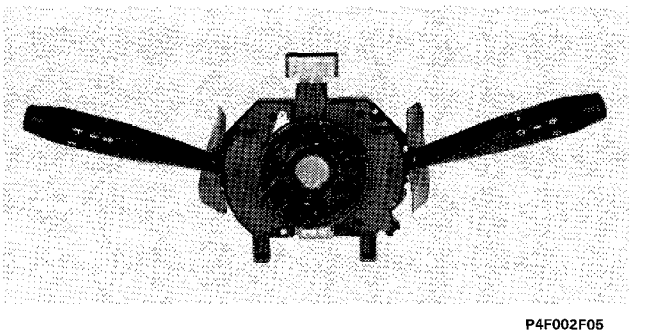

P4F002F05

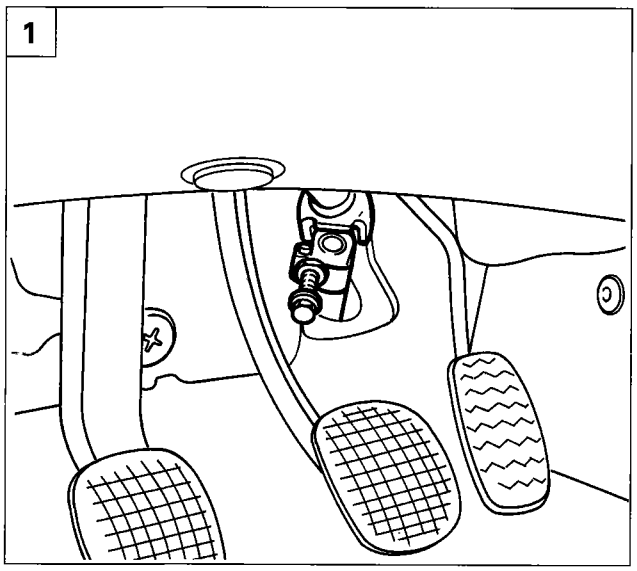

P4F003F01

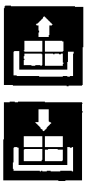

STEERING COLUMN

Removing-refitting

To remove the steering column, proceed as follows:

1. remove the bolt securing the lower column to the steering pinion;

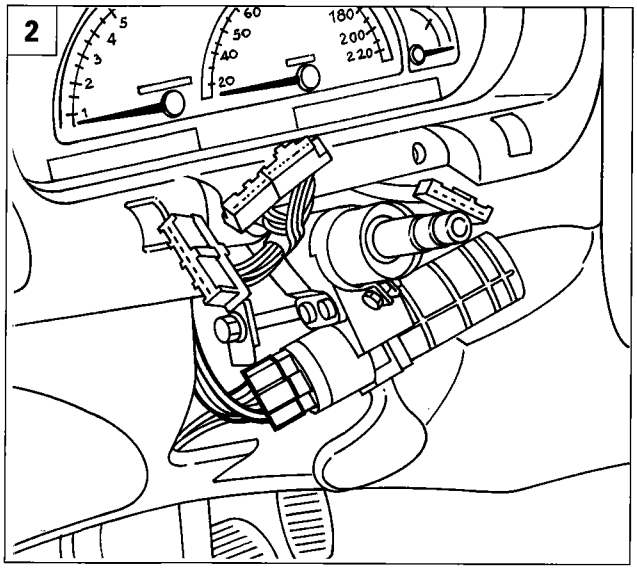

P4F003F02

2. disconnect the ignition switch connector;
3. undo the screws securing the steering column mounting to the body shell and remove the steering column complete with lower column.

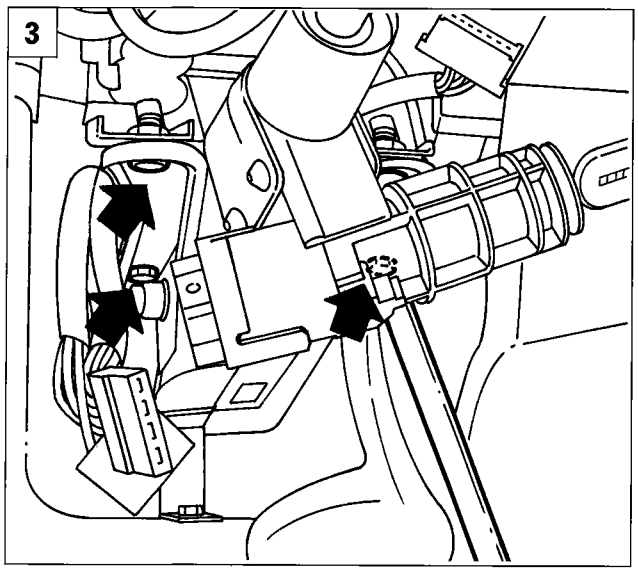

P4F003F03

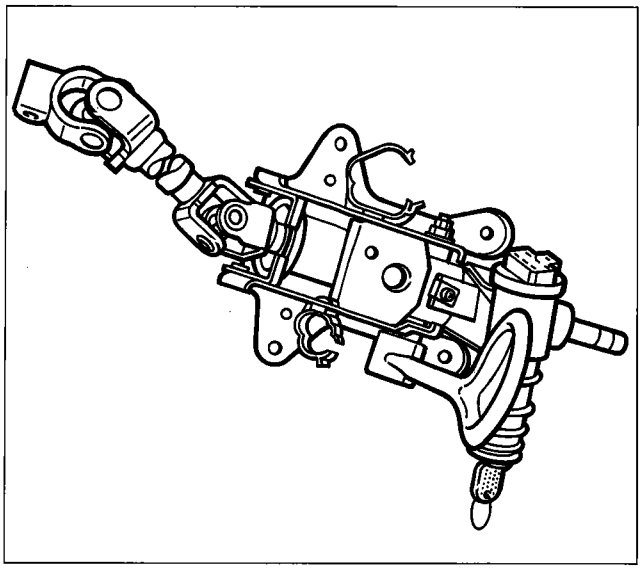

P4F003F04

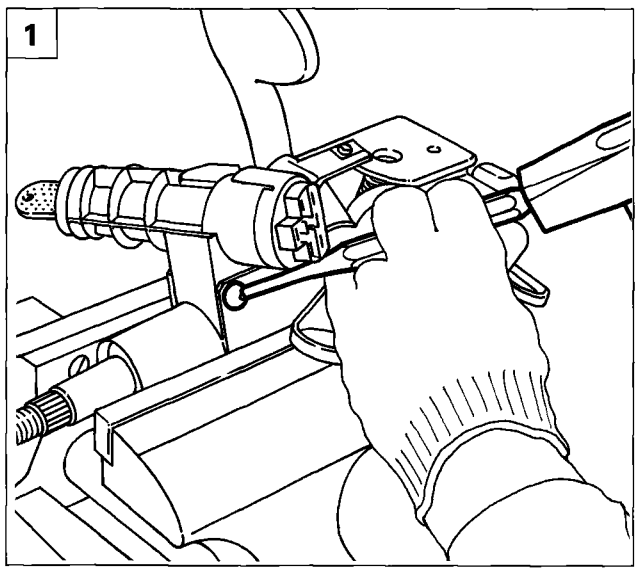

P4F004F01

IGNITION SWITCH BLOCK

Dismantling-reassembly

To dismantle the ignition switch block, proceed as follows:

1. using a punch, unto the shear bolts securing the ignition switch block mounting;

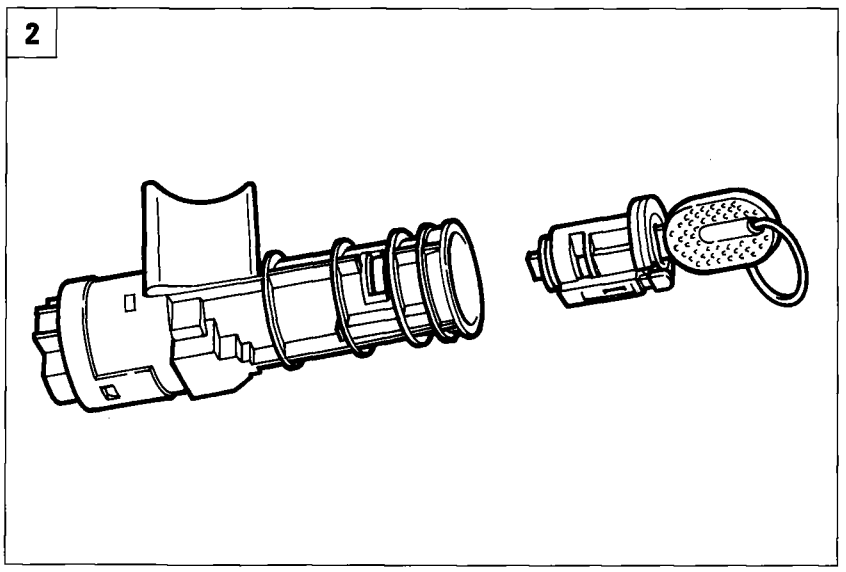

P4F004F02

2. remove the ignition switch block;
3. remove the ignition switch and lock from the block.

NOTE *When refitting, use new shear bolts and tighten them until the hexagonal head shears.*

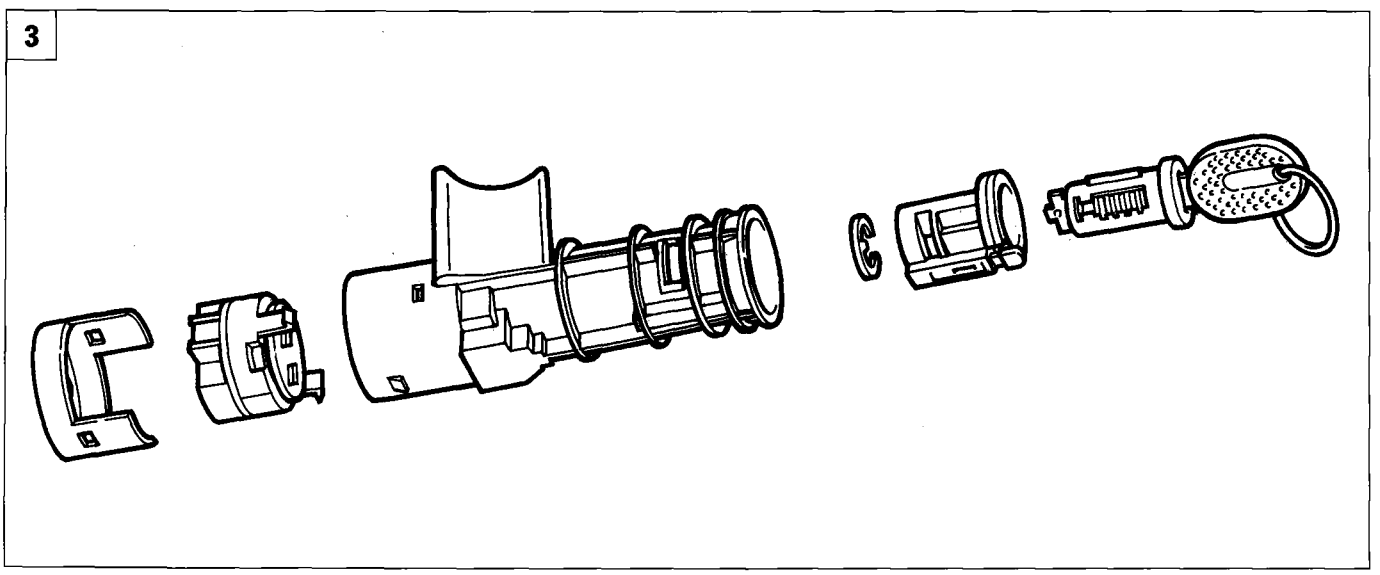

P4F004F03

DESCRIPTION AND OPERATION

The power steering system comprises:
- a feed reservoir located in the engine compartment;
- a vane pump, driven by the engine with a maximum flow and pressure valve;
- a set of connecting pipes between pump-distributor valve-master cylinder-reservoir;
- a rack-and-pinion hydraulic steering gear.

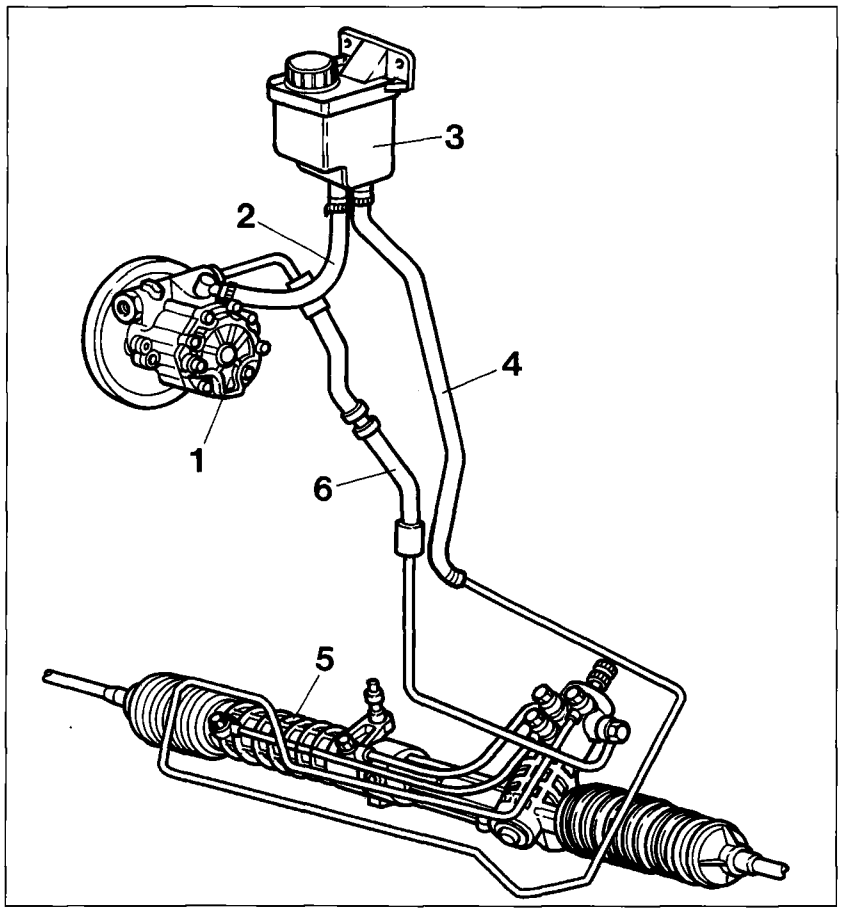

P4F005F03

Components of the power steering system

1. Pump
2. Fluid delivery pipe to pump
3. Fluid reservoir
4. Fluid return pipe to reservoir
5. Power-assisted steering gear
6. Pressurized fluid delivery pipe

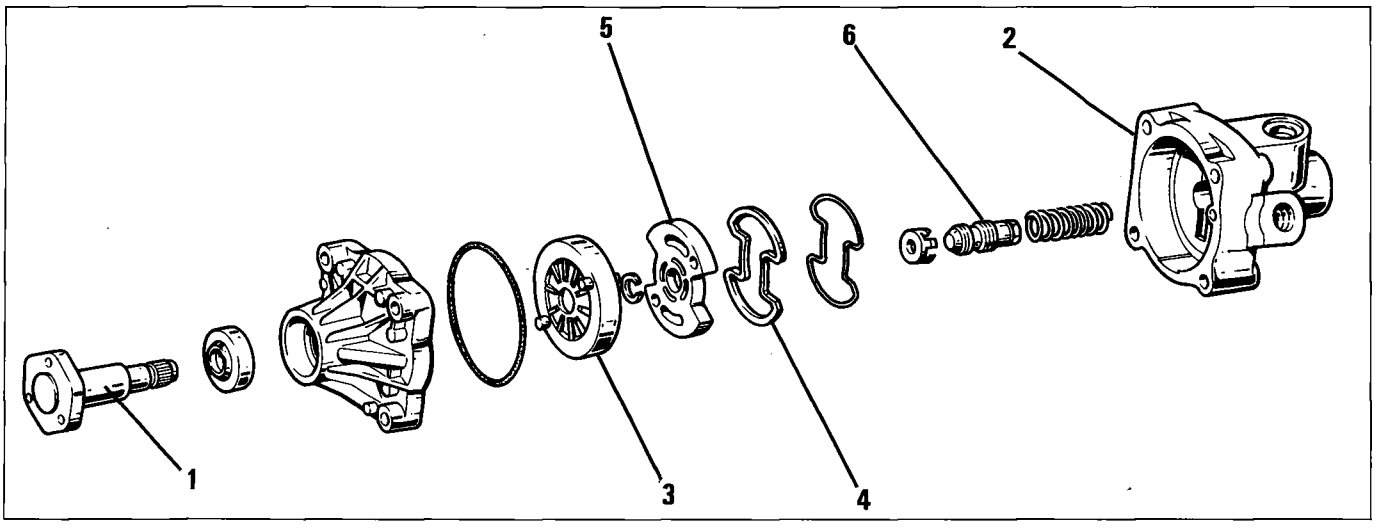

P4F005F04

1. Drive shaft
2. Pump body
3. Vane impeller
4. Seal
5. Impeller side plate
6. Regulating valve

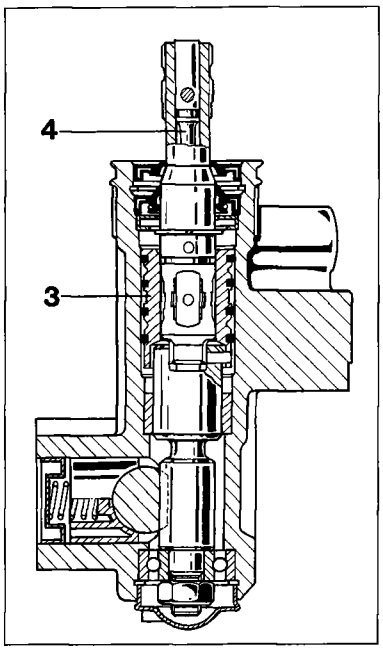

P4F006F01

Power steering distributor valve

The power steering pump is driven by the engine by a belt, and can supply a feed pressure varying between 3.5 bar in the "neutral" position and a maximum of 85 bar in the "full lock" position. The power steering assembly is similar to mechanical rack- and--pinion steering gear, except for the following differences:

a. the steering gear contains a master cylinder (2) in which a double-acting piston (1) runs, joined to the rack;

b. in the worm screw seating, there is a distributor valve (3) with the relevant pipes. It is operated by a torsion device (4), located on the end of the worm screw.

Depending on the torsion transmitted by the steering wheel to the device, the fluid from the pump is sent to the reservoir, or to one of the 2 chambers A or B of the master cylinder.
The force generated by the pressure of the fluid on the lateral surface of the piston causes the latter, and hence the rack, to move.

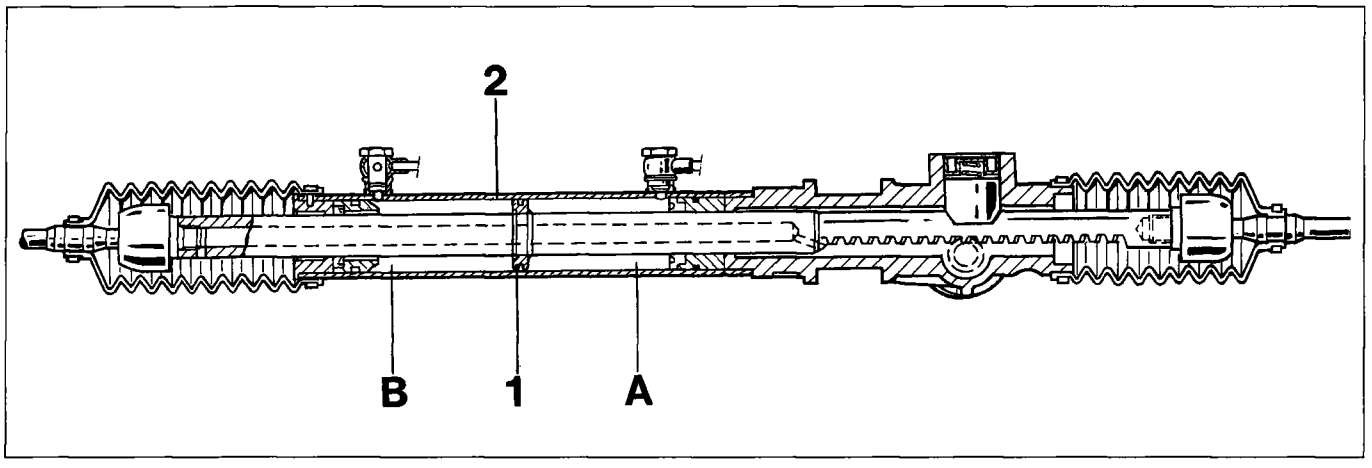

P4F006F02

Longitudinal section of rack-and-pinion power steering gear

Check on operation

Check the rolling torque of the steering wheel with the car stopped and the engine running. The torque must be betweeen 0.6 daN with the engine idling and 0.75 daN with the engine at maximum rpm; if these values are exceeded, check the pressure of the system with the wheels on full lock. To do this, fit a pressure gauge with T-connector on the pressurized fluid pipe to the power steering gear (from the pump) and turn the wheels to full lock on one side. When the steering wheel is forced to rotate further, the pressure reading should rise to about 85 bar. If this does not happen, there is a fault in the fluid pump or the power steering distributor valve.

The above check is carried out with the engine running at 2000 - 4000 rpm.

NOTE *The power steering assembly and vane pump should not be dismantled into their components for any reason, but sent to the Manufacturer for overhaul.*

Checking fluid level: the fluid level should be checked with the engine off and cold, and topped up as necessary.

The power steering system is self-bleeding: it is bled by turning the steering wheel fully to the right and left with the engine running and the car stopped.
This operation must be carried out whenever the connecting pipes are removed and refitted.

NOTE *If the steering becomes hard, the pump drive pulley belt may be slipping or the fluid level may be low.*
If there is a fault in the pump, master cylinder or distribution valve, the power steering will function as an ordinary mechanical steering gear.

FRONT WHEEL TOE-IN

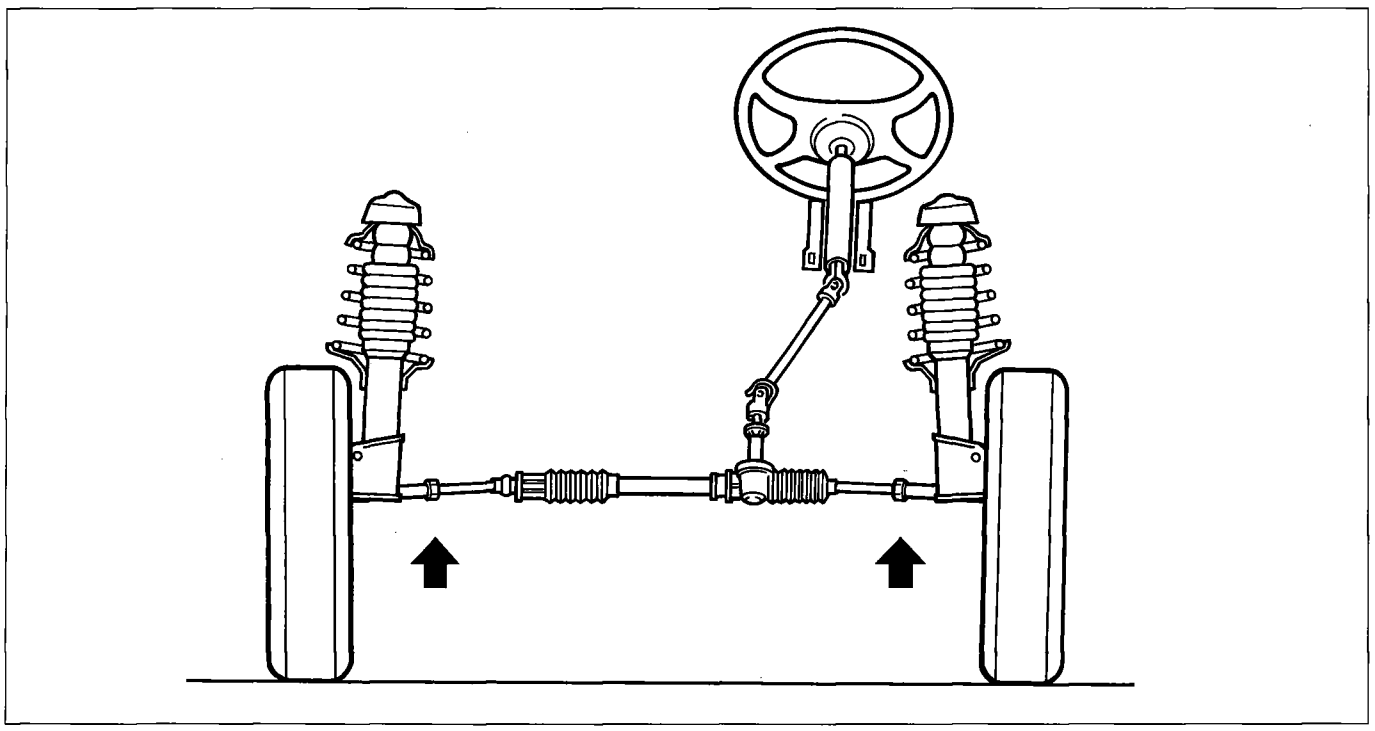

F4F007F01

The front wheel toe-in is adjusted by slackening the tie rod nut and screwing or unscrewing the tie rod until the specified toe-in value is obtained, without changing the position of the steering wheel spokes.

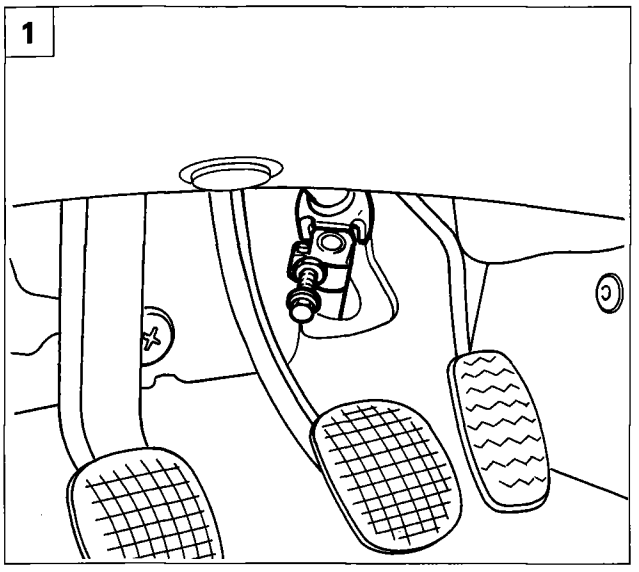

P4F003F01

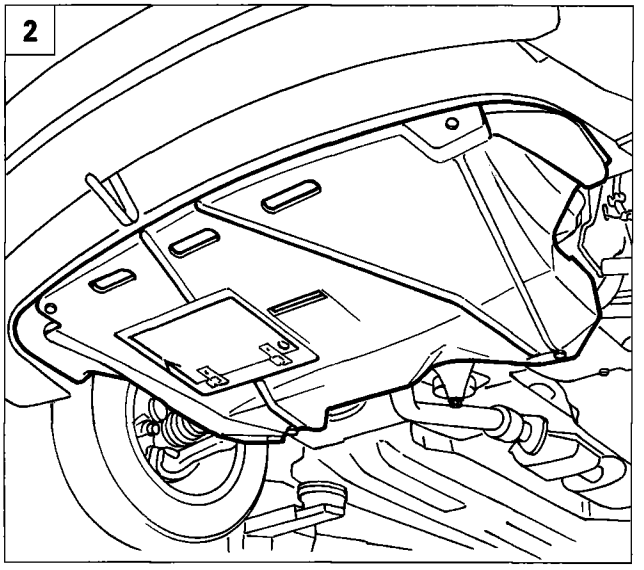

P4F008F01

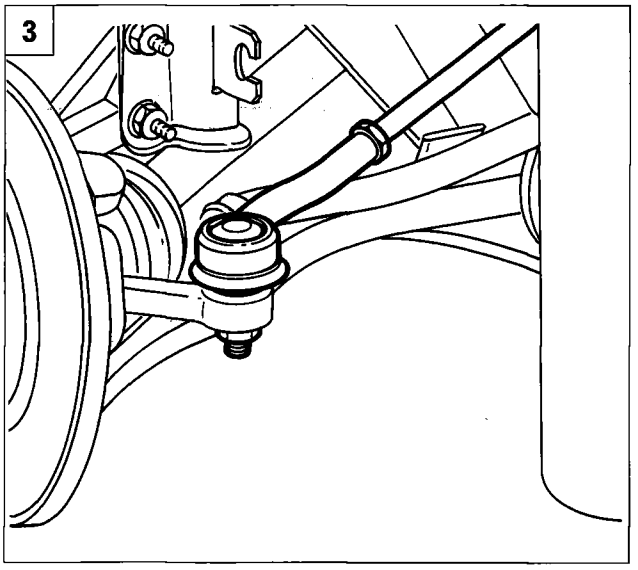

P4F008F02

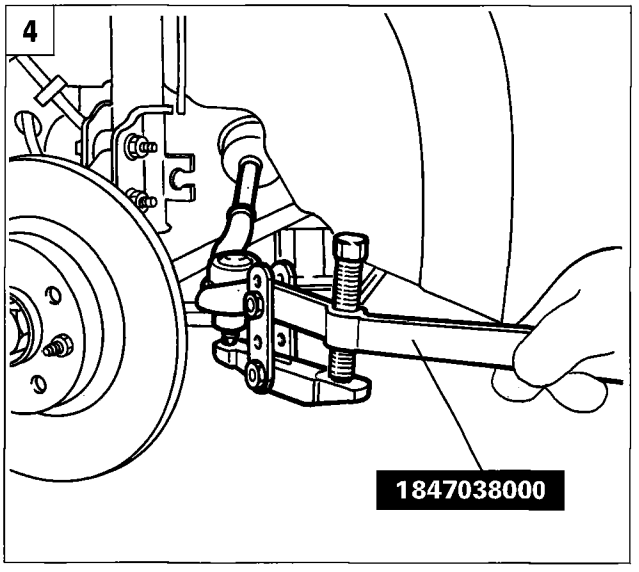

P4F005F03

RACK-AND-PINION STEERING GEAR

Removing-refitting

Before removing the power steering gear, drain the fluid from the reservoir.

NOTE *Do not re-use the oil fluid. The level should be topped up with fresh fluid.*

To remove the rack-and-pinion power steering gear, proceed as follows:

1. Remove the bolt securing the column to the steering pinion.
2. Remove the bottom guard from the engine compartment.
3. Undo the nuts securing the right and left tie rods from the front vertical links.
4. Using tool 1847038000, separate the tie rod end balljoint heads from the two vertical links.

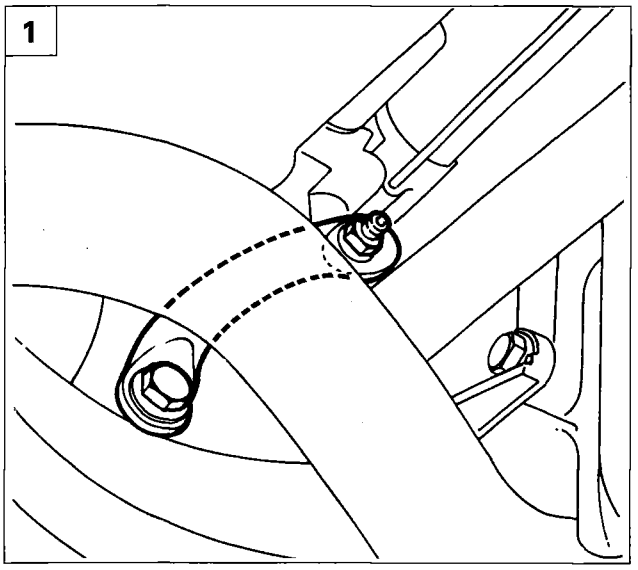

P4F009F01

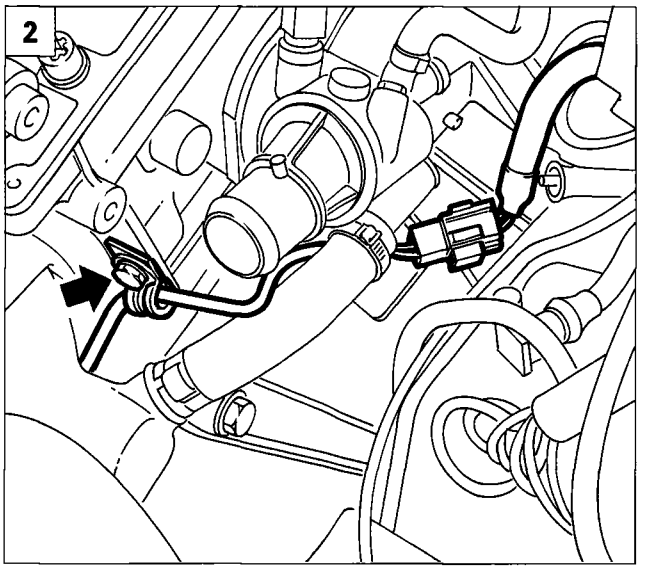

P4F009F02

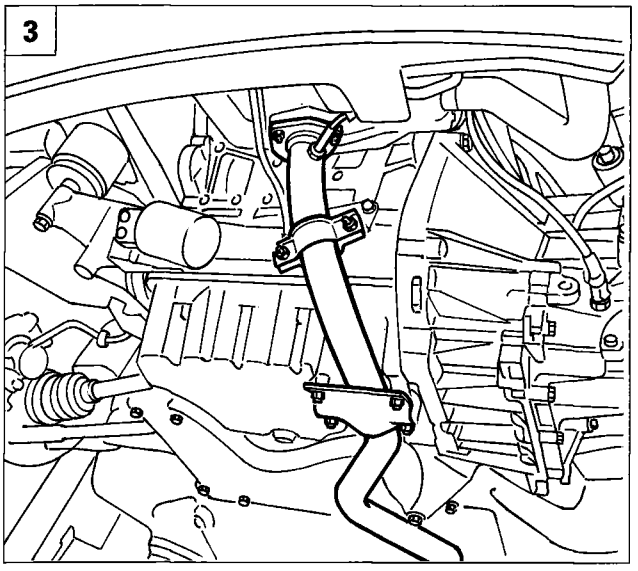

P4F009F03

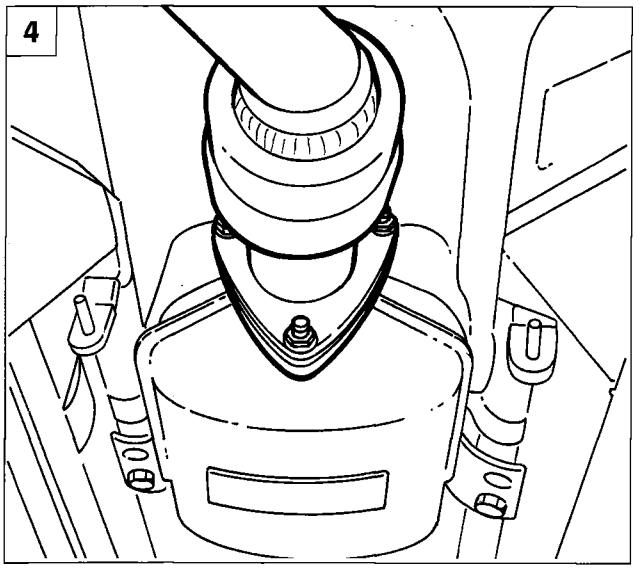

P4F009F04

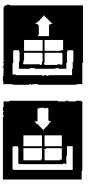

1. Remove the reaction link on the power unit mounting on the differential side.
2. Disconnect the Lambda probe wiring connector.
3. Undo the two nuts on the front exhaust pipe clip.
4. Undo the nuts securing the front exhaust pipe to the catalytic converter and remove the pipe.

Copyright Fiat Auto

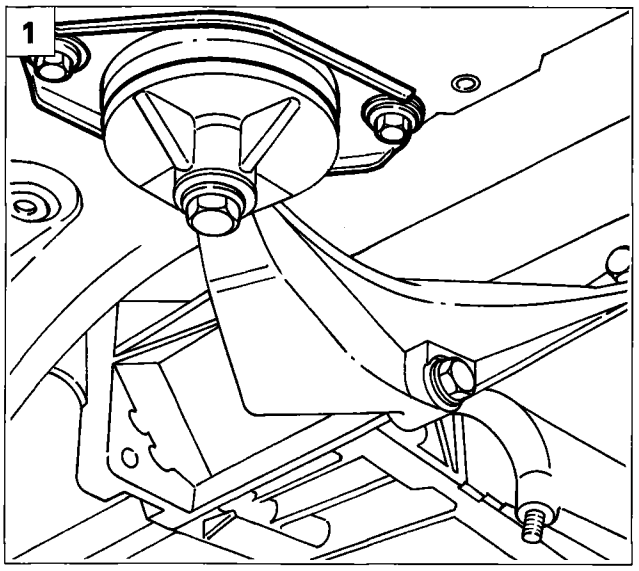

P4F010F01

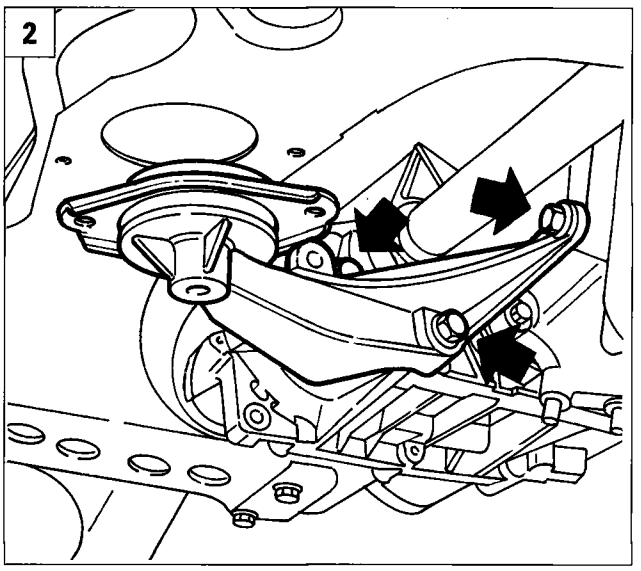

P4F010F02

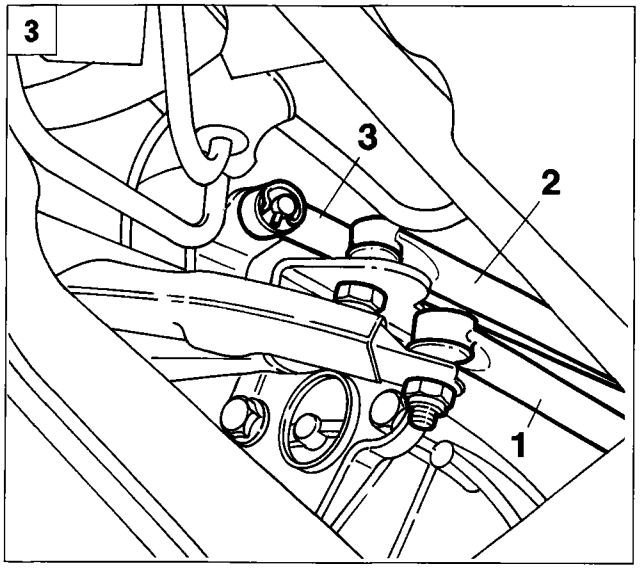

P4F010F03

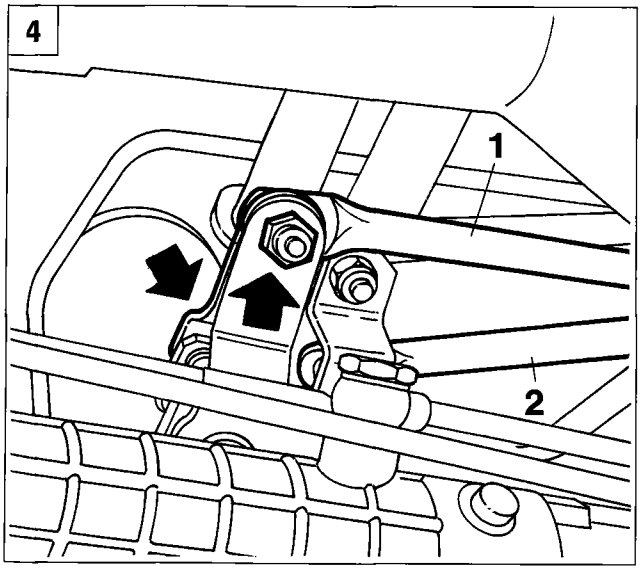

P4F010F04

1. undo the bolts securing the power unit mounting, differential side, to the body shell;

The gear linkages should only be dismantled on the 1370 12v - 1580 16v - 1747 16v - 1998 20v engines.

2. undo the bolts securing the power unit mounting to the gearbox;
3. undo the nuts securing the gear engagement lever arm (1) and the reaction link (2); remove the split pin securing the gear selector lever arm (3), then release the arms and link from their seatings;
4. undo the nuts (arrowed) then lift and move over to the left the top of the relay mounting with the gear engagement lever arm (1) and reaction link (2);

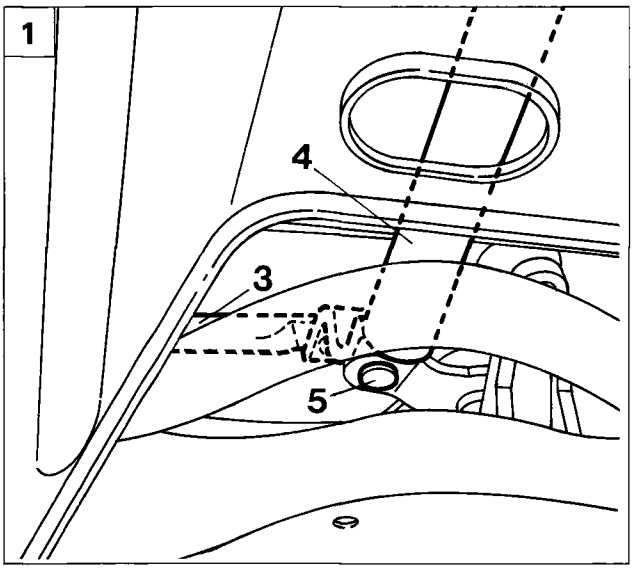

P4F011F01

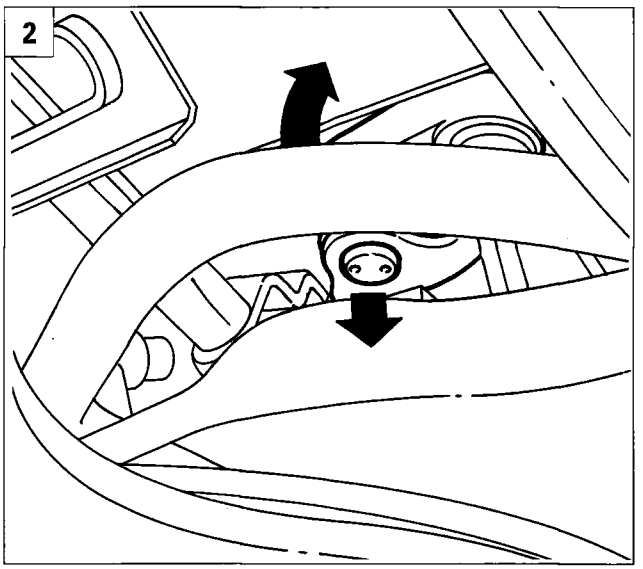

P4F011F02

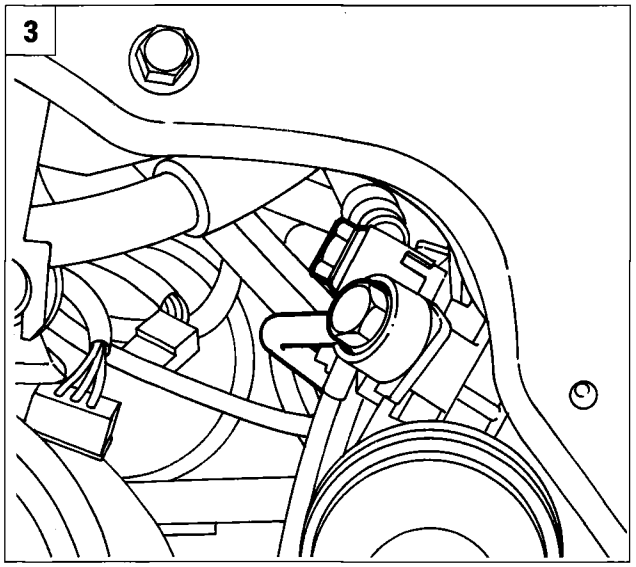

P4F011F03

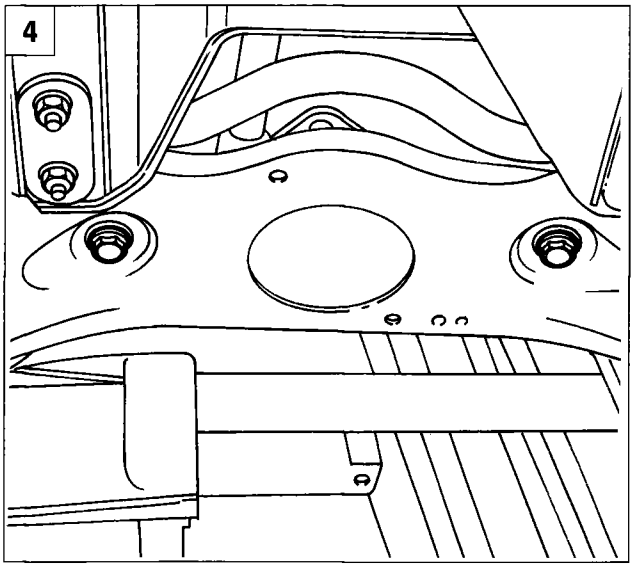

P4F011F04

1. Remove the head (5) anchoring the gear change arm (4) to the relay mounting, and move over to the left the gear change arm with the gear selector lever arm (3).

2. Turn the pin securing the relay mounting backwards and withdraw the mounting downwards.

3. Undo the bolts securing the fluid return and delivery pipes to the power steering gear.

4. Undo the bolts securing the power steering gear to the steering subframe.

Copyright Fiat Auto

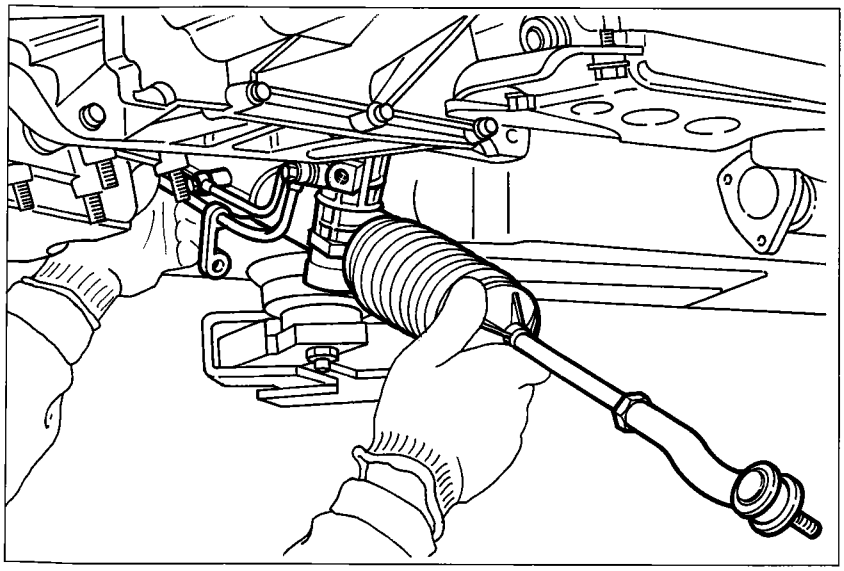

P4F012F01

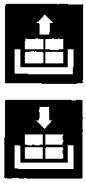

- remove the steering gear from under the vehicle.

NOTE *To refit the steering gear, reverse the procedure for removal.*

Check the front wheel toe-in whenever the steering gear is removed and refitted.

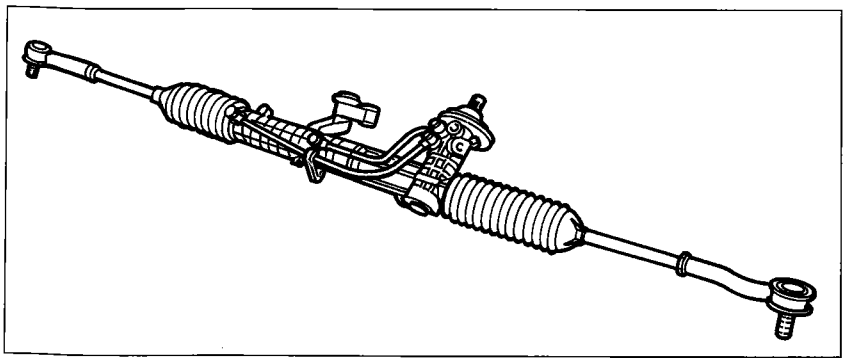

P4F012F02

Rack-and-pinion power steering gear assembly

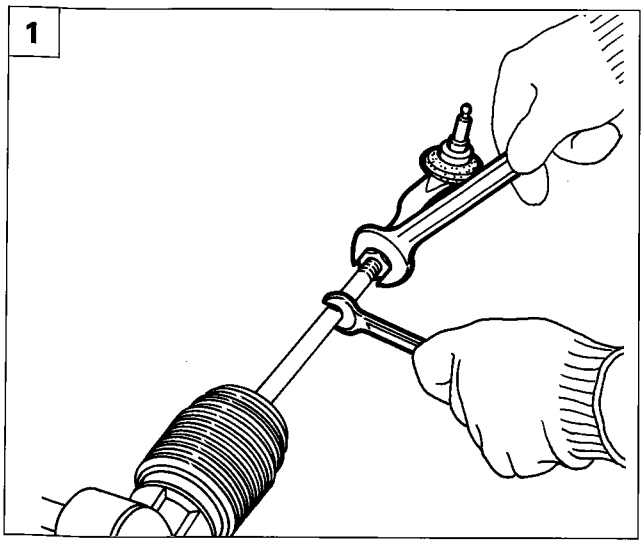

P4F012F03

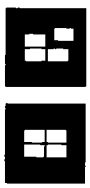

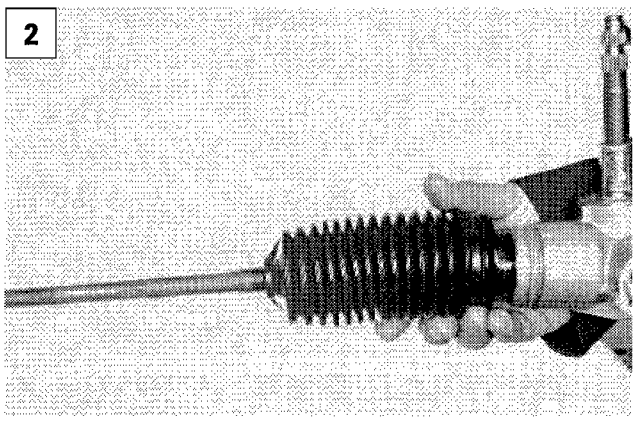

P4F012F04

Dismantling-reassembly

1. slacken the tie rod nut then unscrew the tie rod until you can remove it;

NOTE *Check that the balljoints do not have excessive play or are stiff.*

2. undo the clips on the dust excluder and seal, and withdraw the dust excluder.

NOTE *Carefully check that the dust excluder has no holes or tears, otherwise it will have to be replaced.*

Before fitted the last dust excluder (pinion side), insert the specified quantity of grease.

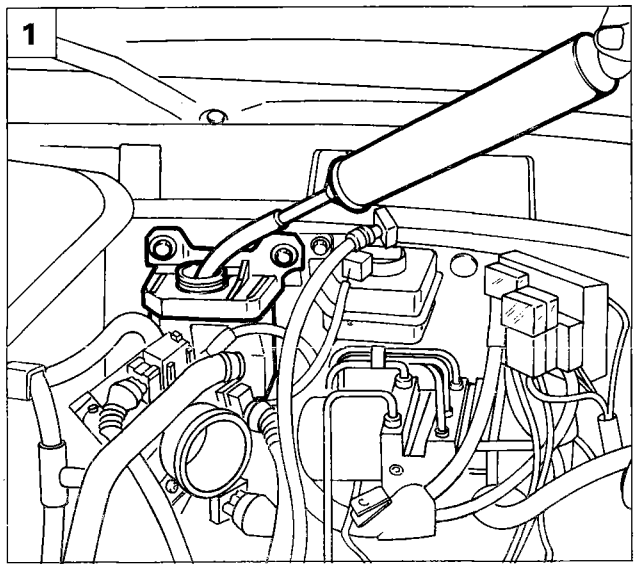

P4F027F01

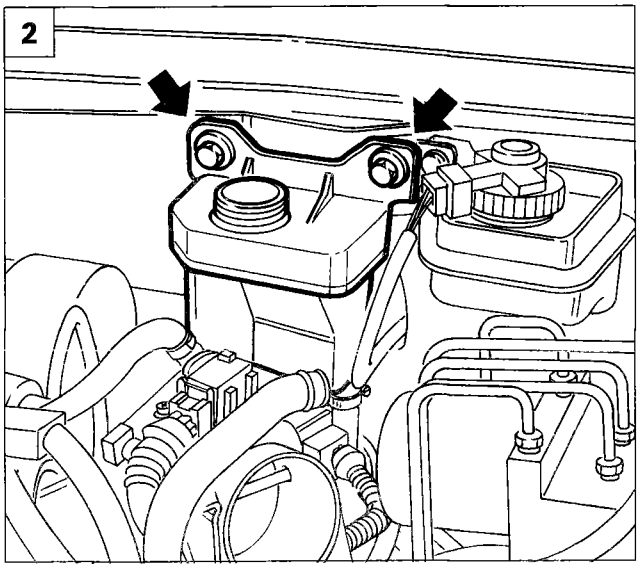

P4F027F02

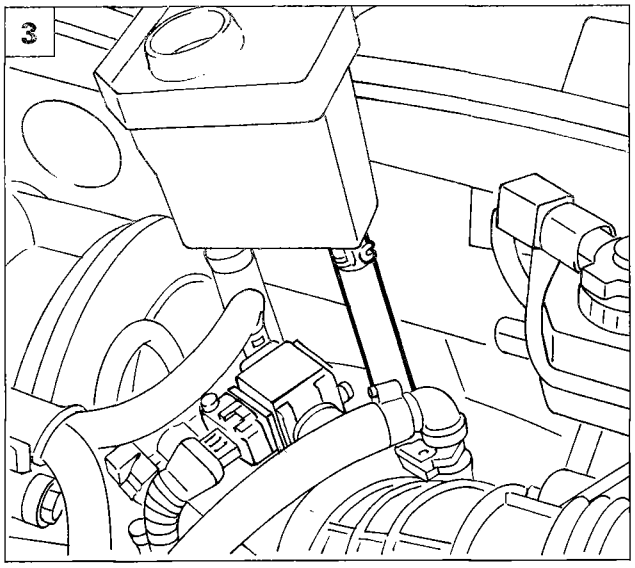

P4F027F03

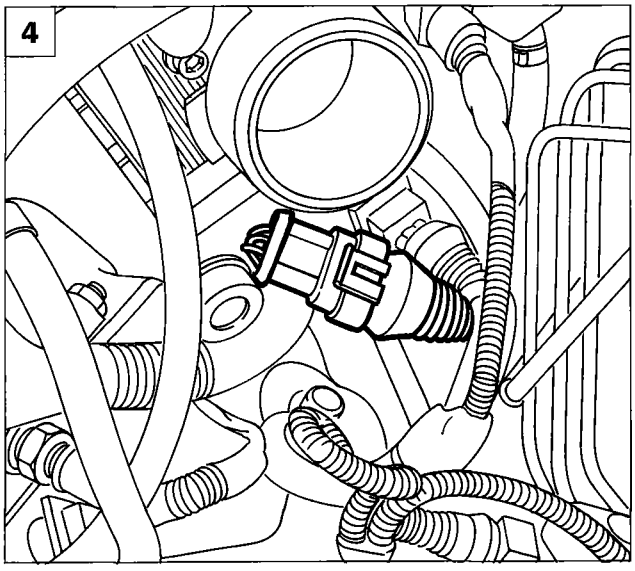

P4F027F04

4F027F

REMOVING - REFITTING FLUIE RETURN PIPE TO RESERVOIR

Removing

Place the car on ramps, disconnect the battery's negative pole, remove the front left wheel and proceed as described below.

1. Drain the power steering fluid from the reservoir, collecting it in an appropriate container.
2. Undo the bolts securing the steering fluid reservoir to the bulkhead.
3. Disconnect the hose indicated, which returns fluid to the reservoir.
4. Disconnect the Lambda probe wiring connector.

41.

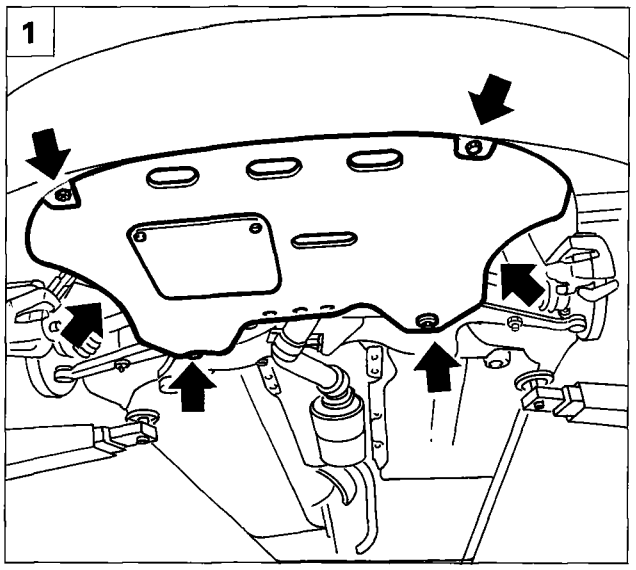

P4F028F01

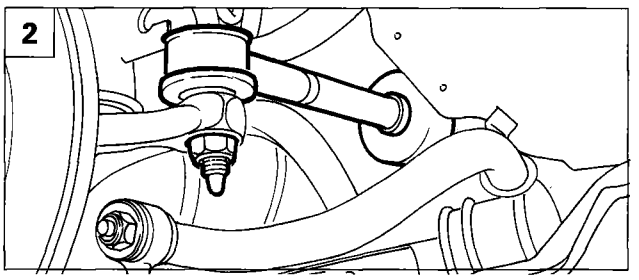

P4F028F02

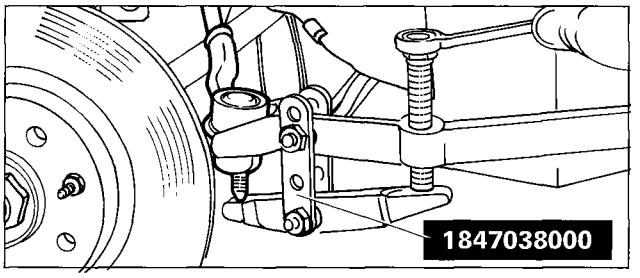

P4F028F03

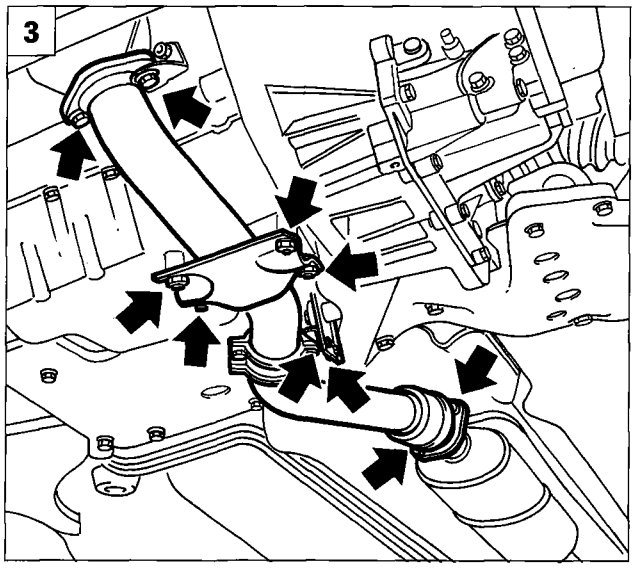

P4F028F04

1. Remove the engine compartment bottom guard.
2. Disconnect the tie-rod end from the vertical link on the gearbox side using tool 1847038000.
3. Disconnect the first section of the exhaust pipe by undoing the attachments shown in the figure.
4. Remove the bracket securing the fluid return pipe to the steering subframe.
5. Remove the reinforcement link from the engine's central mounting.

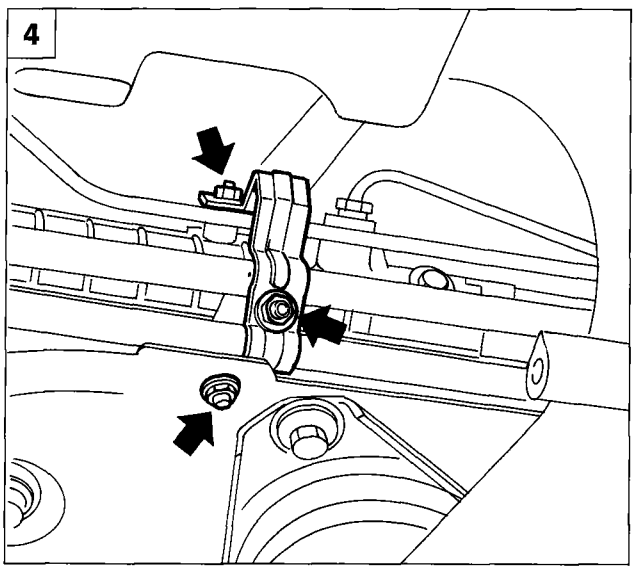

P4F028F05

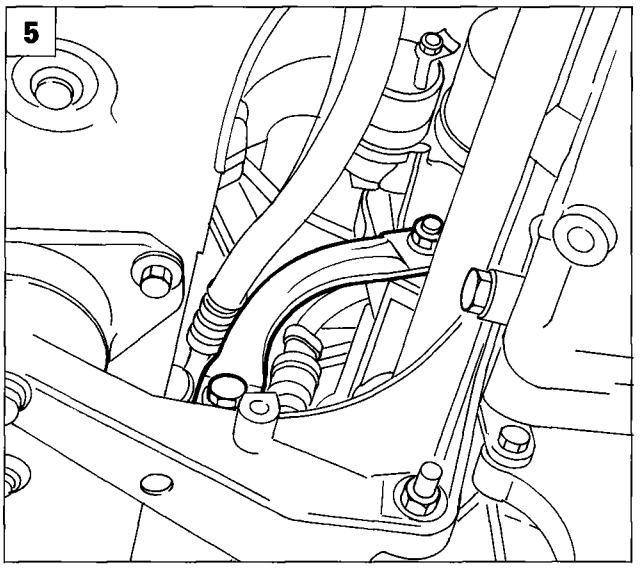

P4F028F06

4F028F

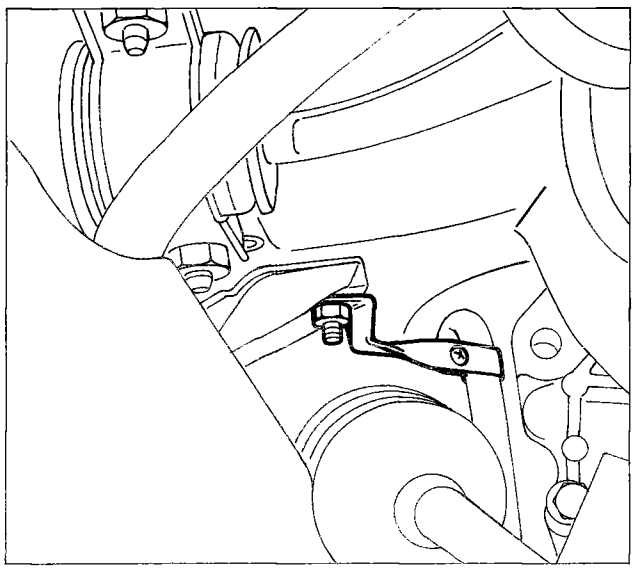

P4F029F01

1. Remove the bracket securing the rigid pipe to the steering subframe.

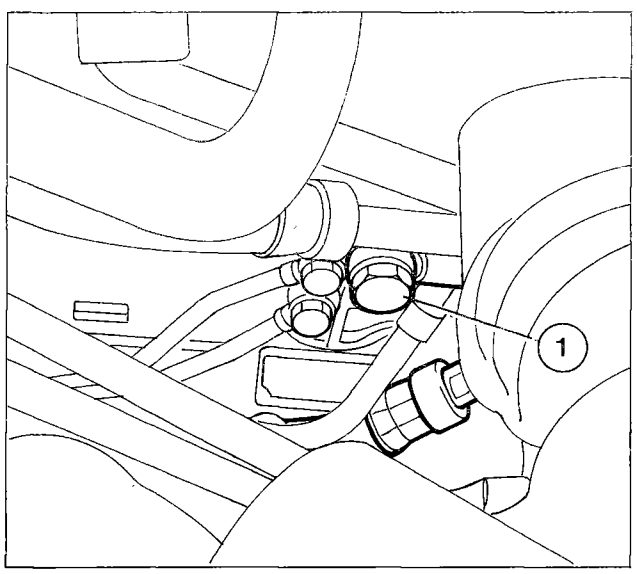

P4F029F02

2. Disconnect the connector (1) from the connection on the power steering gear, then remove the fluid return pipe by withdrawing it towards the timing gear side of the car.

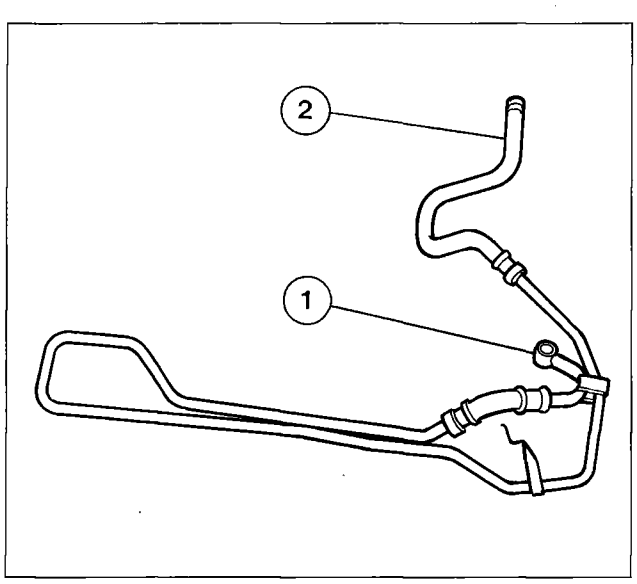

P4F029F03

3. View of the fluid return pipe to the reservoir

   1. Rigid section with connector for attachment on power-assisted steering gear
   2. Flexible sectioin for connection to fluid reservoir.

Refitting

To refit, reverse the procedure for removal.

4F029F

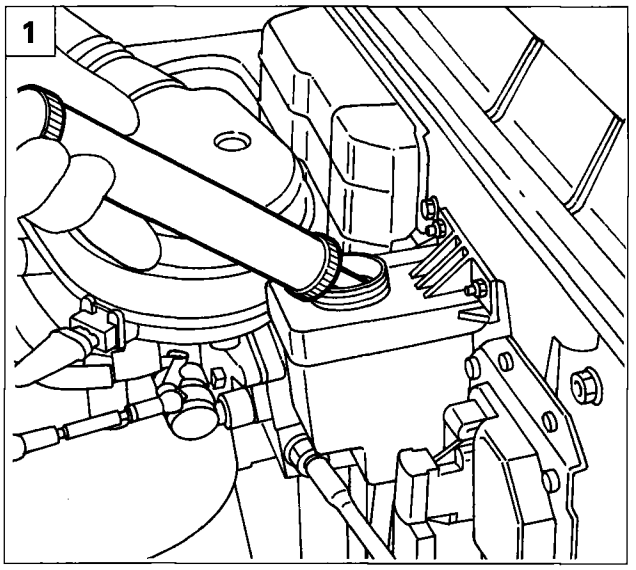

P4F013F01

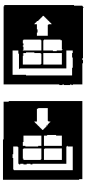

Removing-refitting

Disconnect the battery's negative pole and remove the power steering pump as follows:

1. Empty the fluid reservoir using a syringe.

NOTE *Do not re-use the old fluid. The level should be topped up with fresh fluid.*

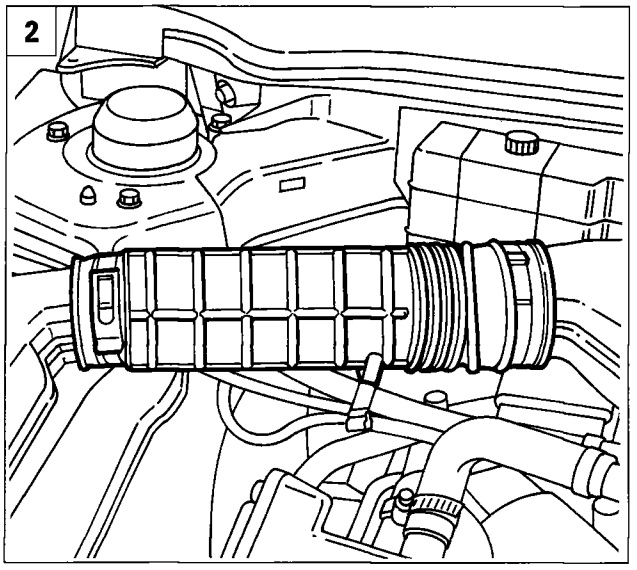

P4F013F02

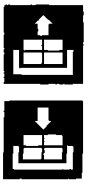

2. Slacken the clips and remove the air intake duct.
3. Undo the screws indicated and remove the belt guard.
4. Disconnect the fluid inlet and outlet pipes on the power steering pump.

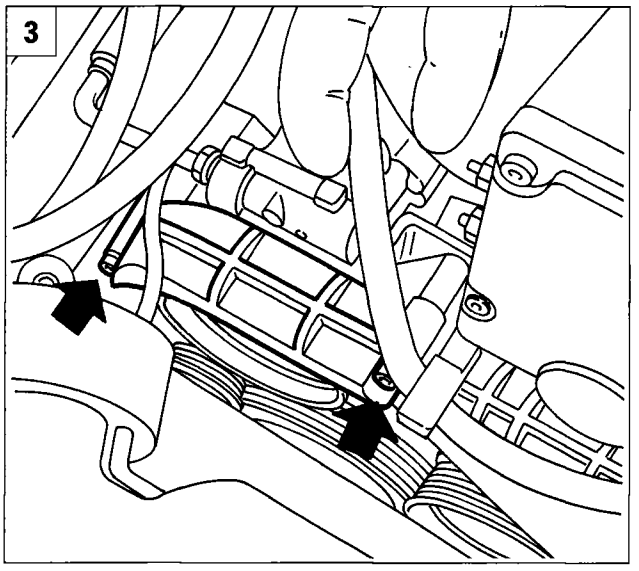

P4F013F03

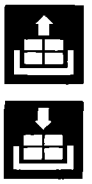

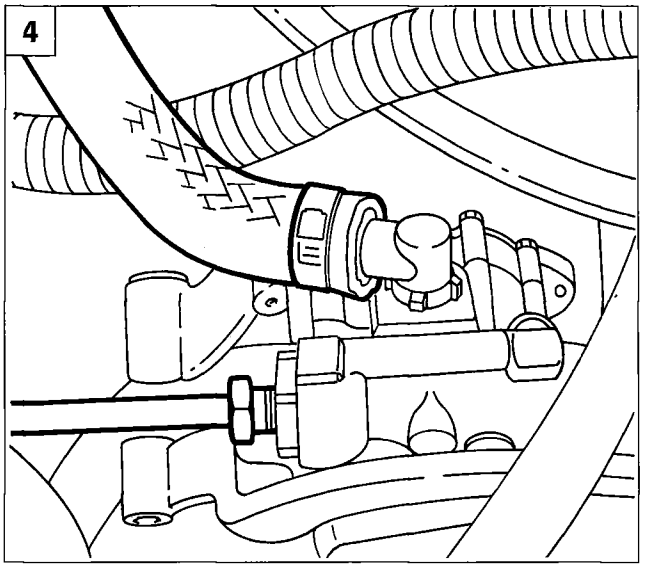

P4F013F04

41.

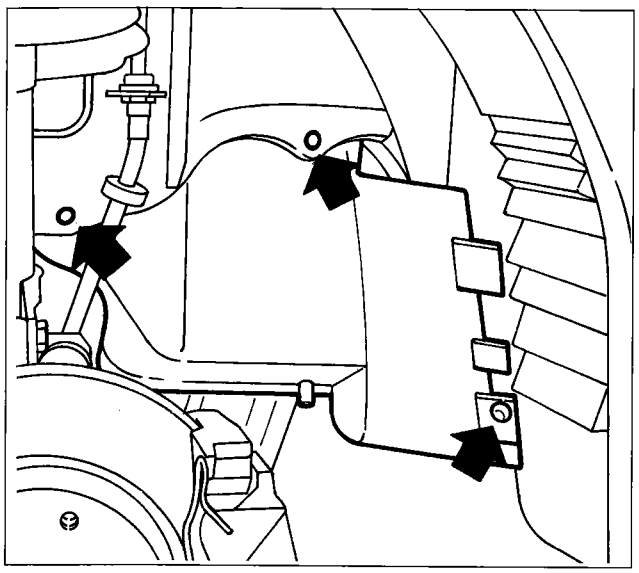

P4F014F01

Place the vehicle on ramps, remove the front right wheel, and then:
- undo the screws, disengage the button and remove the right wheelarch guard;

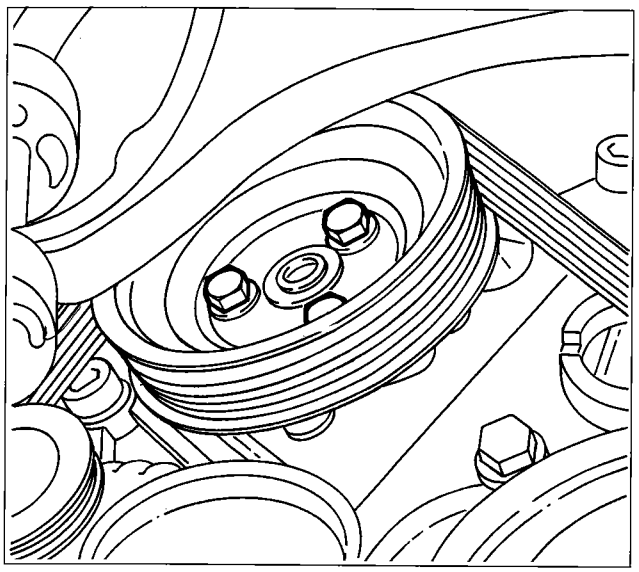

P4F014F02

- undo the pump pulley bolts;

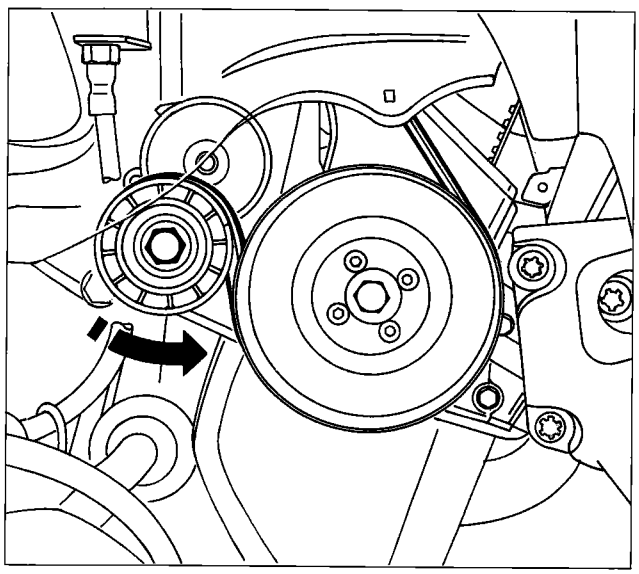

P4F014F03

- undo the belt tensioner and remove the belt;

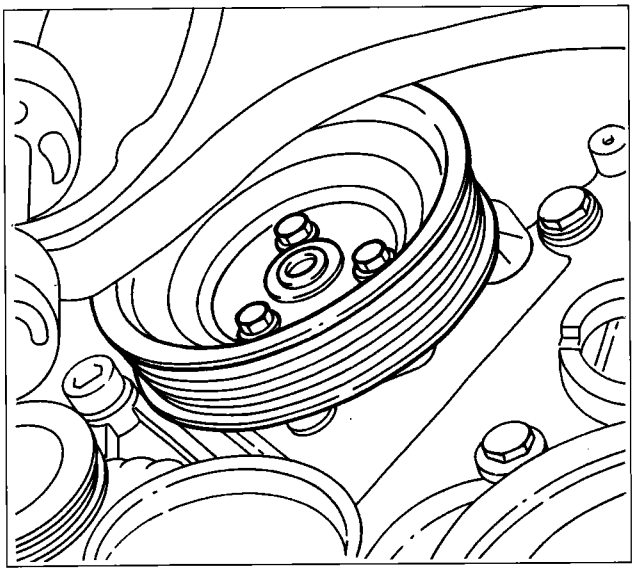

P4F015F01

- undo the bolts and remove the pulley;

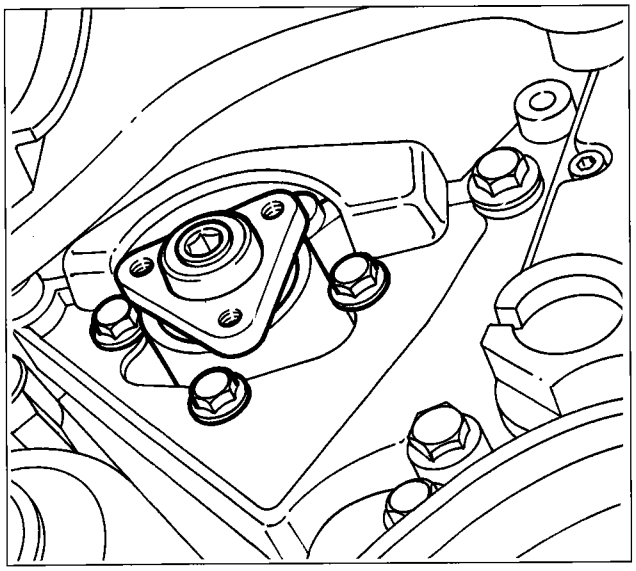

P4F015F02

- undo the bolts securing the pump to the mounting and remove the pump.

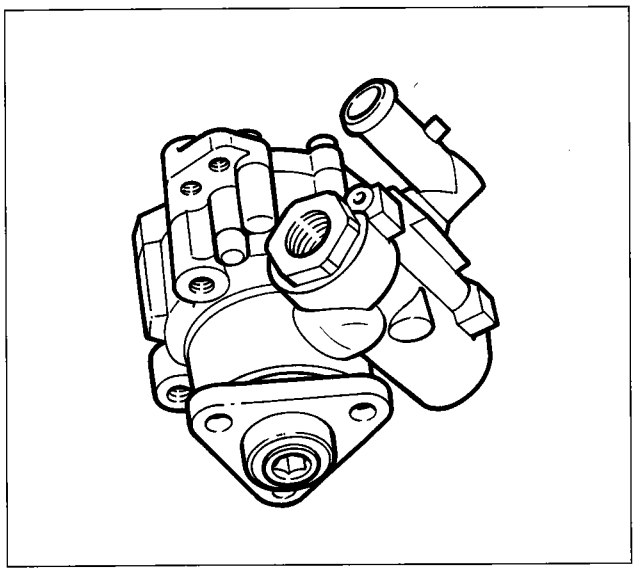

P4F015F03

NOTE *To refit the power steering pump, reverse the procedure for removal.*

Copyright Fiat Auto

41.

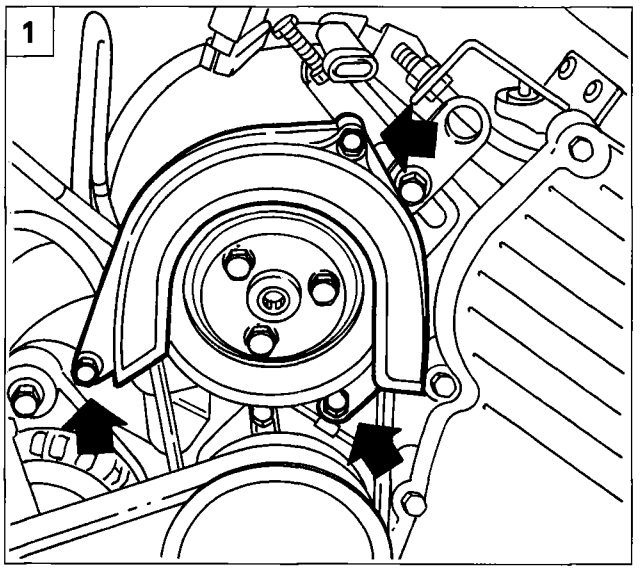

P4F016F01

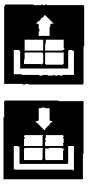

Removing-refitting

Before removing the power steering pump, drain the fluid from the reservoir.

NOTE *Do not re-use the old fluid. The level should be topped up with fresh fluid.*

Disconnect the battery's negative pole and remove the power steering pump by carrying out the following operations:

1. undo the three bolts indicated and remove the plastic guard;

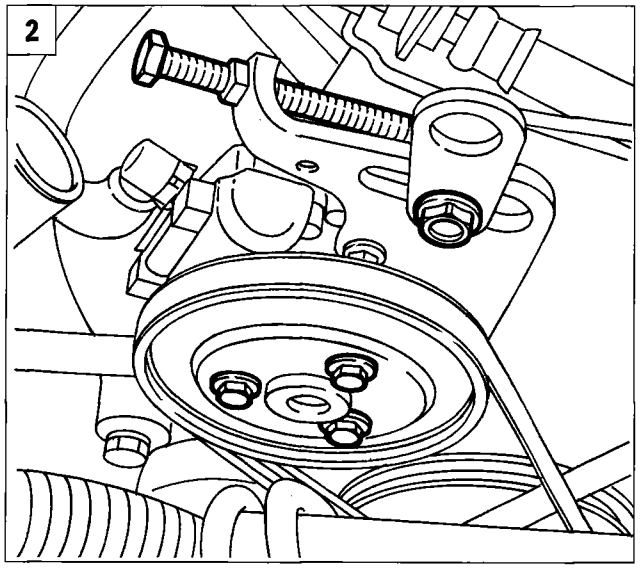

P4F016F02

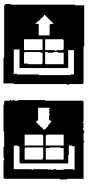

2. undo the pulley bolts and belt tensioner bolts;

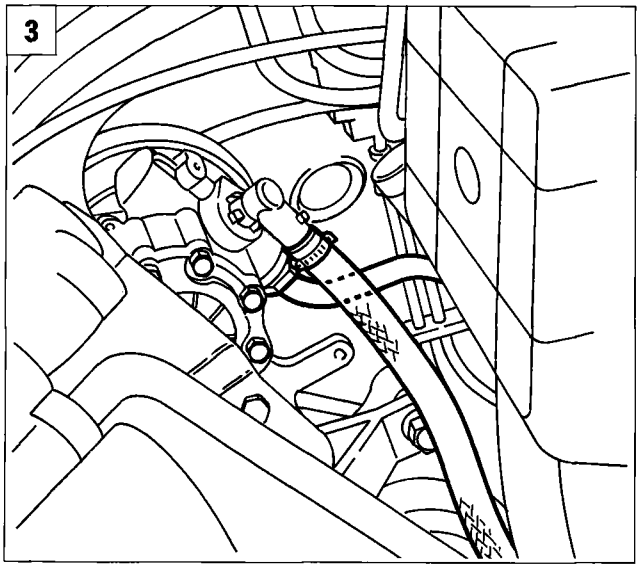

P4F016F03

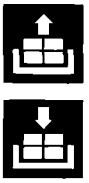

3. disconnect the fluid inlet and outlet pipes from the power steering pump;

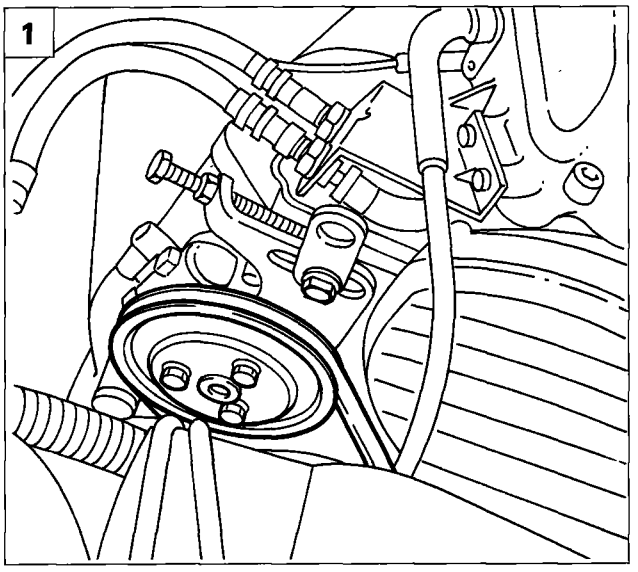

P4F017F01

1. undo the screws and remove the pulley and belt;

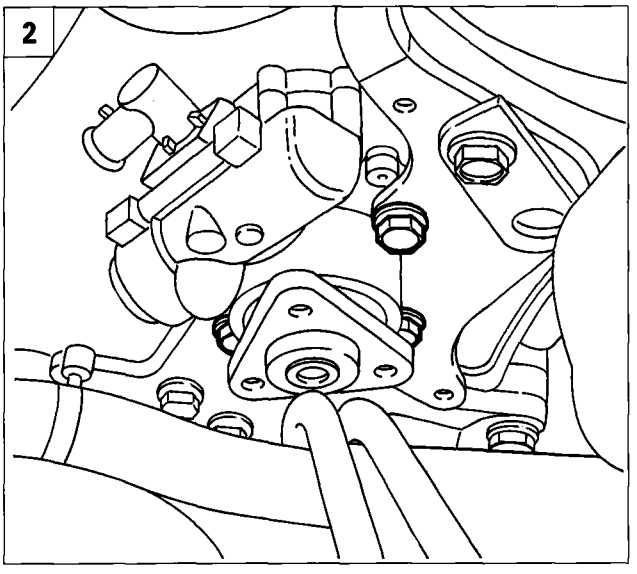

P4F017F02

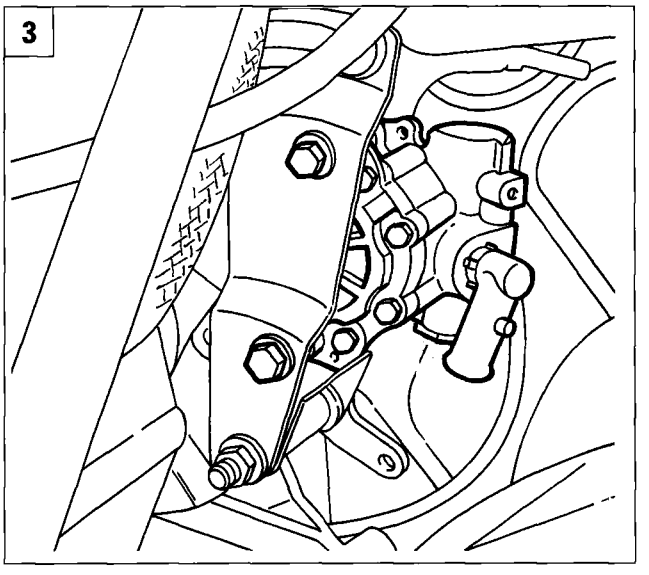

P4F017F03

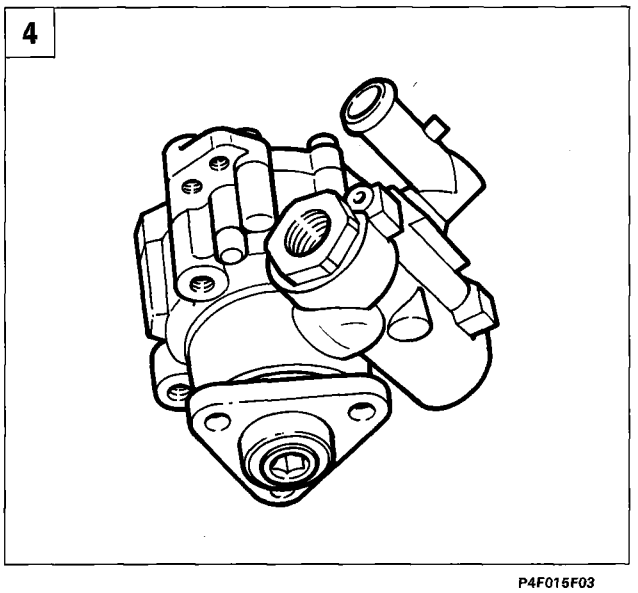

P4F015F03

2. undo the three front bolts securing the pump to the mounting;
3. undo the two rear bolts securing the pump to the mounting;
4. remove the power steering pump.

NOTE *To refit the power steering pump, reverse the procedure for removal.*

41.

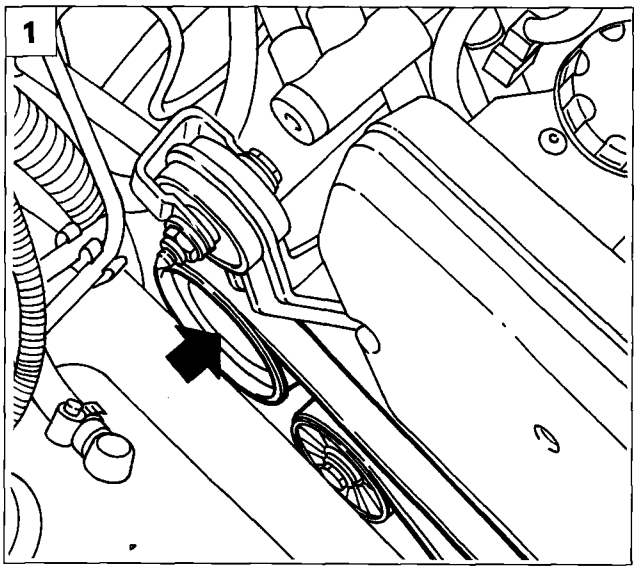

P4F018F01

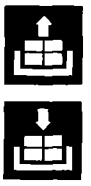

Removing-refitting

Disconnect the battery's negative pole, and drain the fluid from the power steering pump reservoir.

NOTE *Do not re-use the old fluid. The level must be topped up with new fluid.*

To remove the power steering pump, proceed as follows:

1. undo the bolts securing the pump pulley.

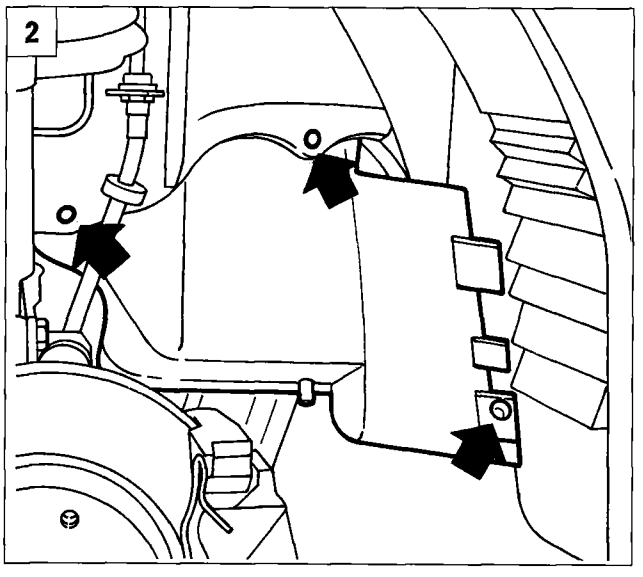

P4F014F01

Place the vehicle on ramps, remove the front right wheel, then:

2. undo the bolts, release the button and remove the right wheelarch guard;
3. slacken the belt tensioner and remove the belt;
4. undo the bolts and remove the pulley.

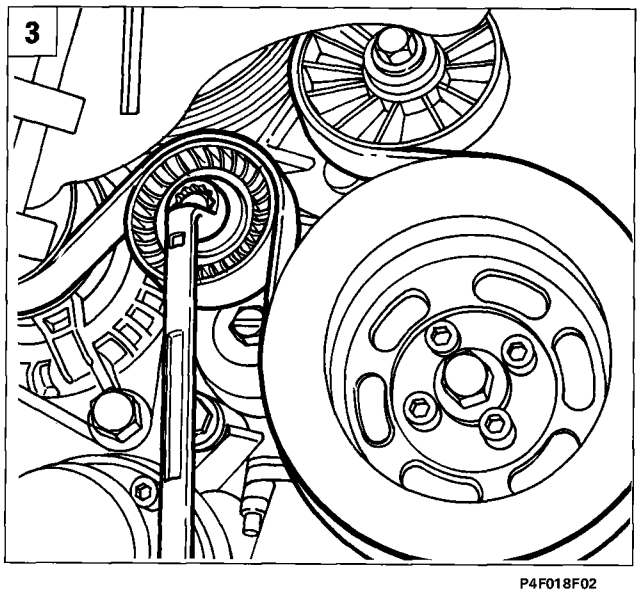

P4F018F02

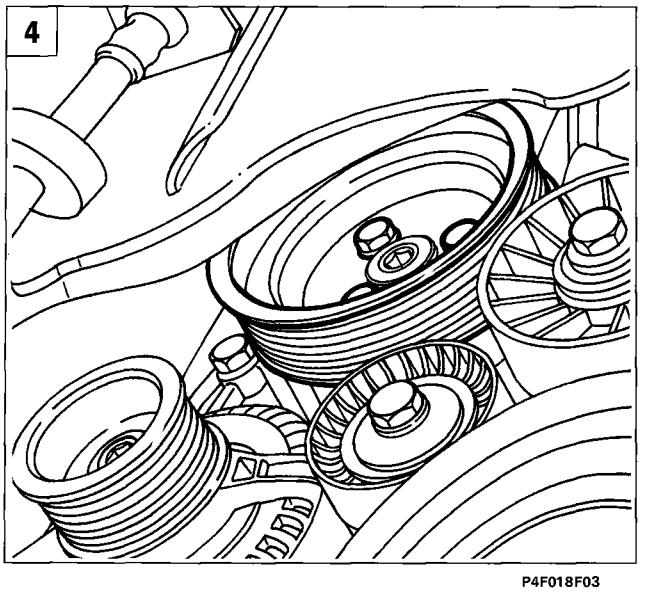

P4F018F03

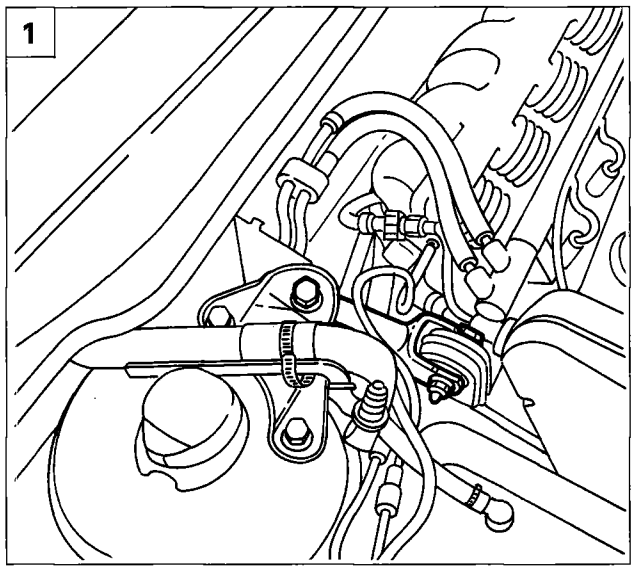

P4F019F01

Working from the engine compartment, carry out the following operations:

1. undo the two bolts securing the link to the engine and bracket, and remove the link;

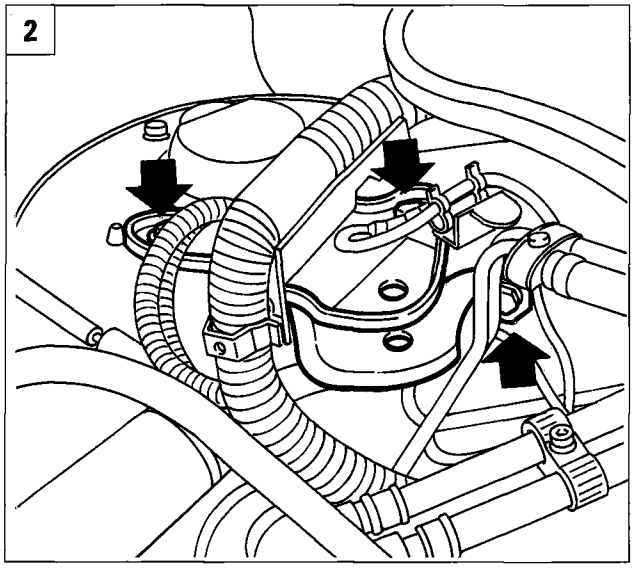

P4F019F02

2. undo the bolts securing the bracket and link to the body shell and remove the bracket;
3. disconnect the connector and earth cable;
4. disconnect the fluid inlet and outlet pipes from the power steering pump.

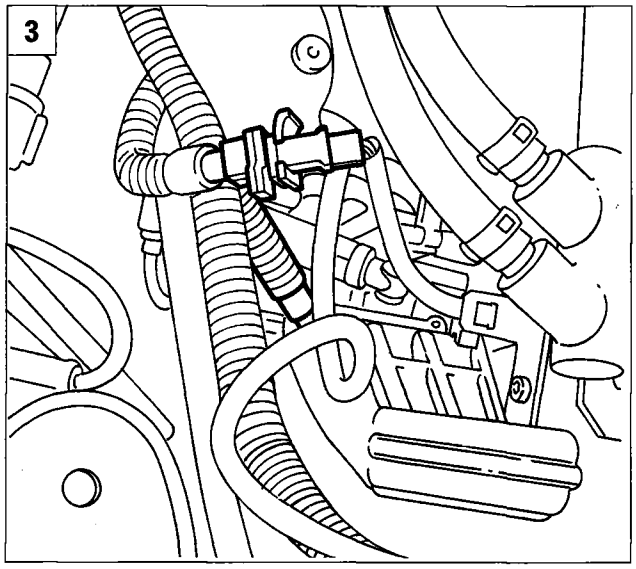

P4F019F03

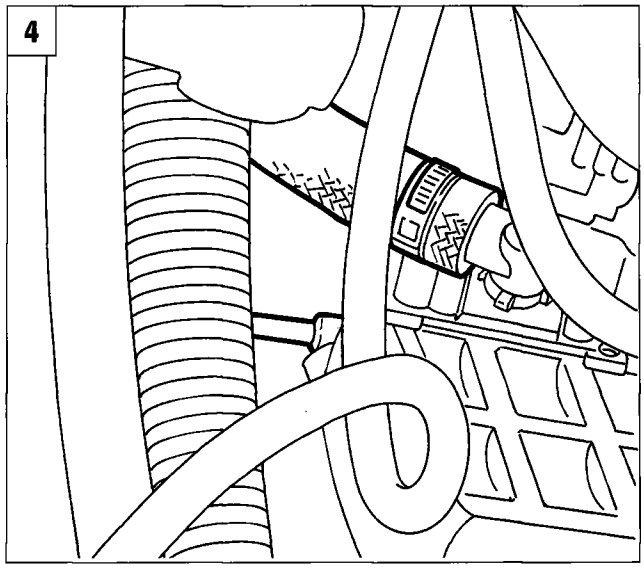

P4F019F04

41.

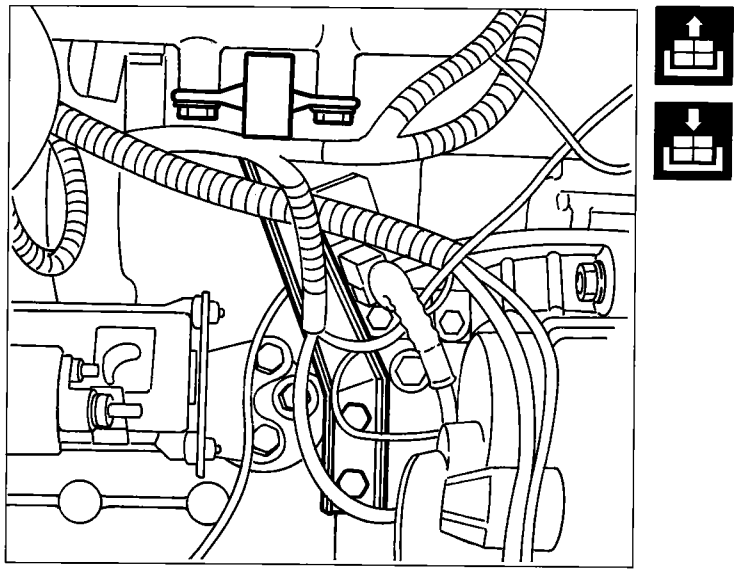

P4F020F01

Raise the vehicle, then:
- from the rear, undo the bolts securing the reaction bracket on the inlet manifold and remove the bracket;

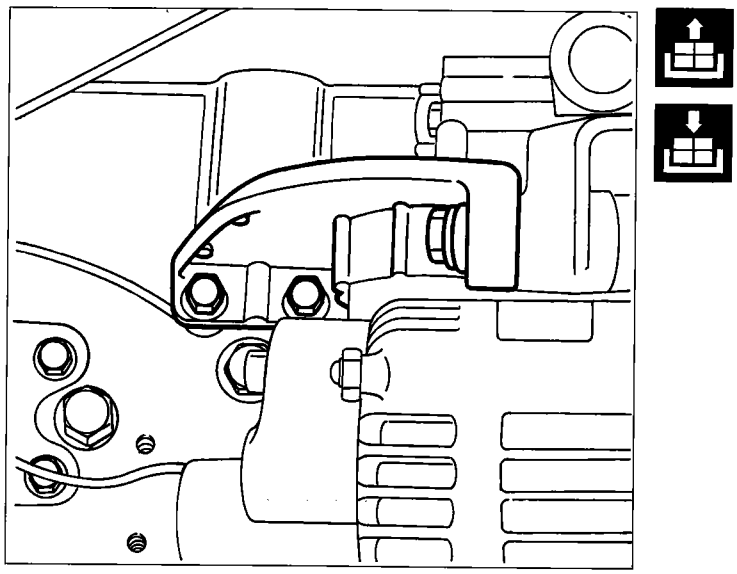

P4F020F02

- undo the bolts securing the alternator mounting bracket and remove the mounting;

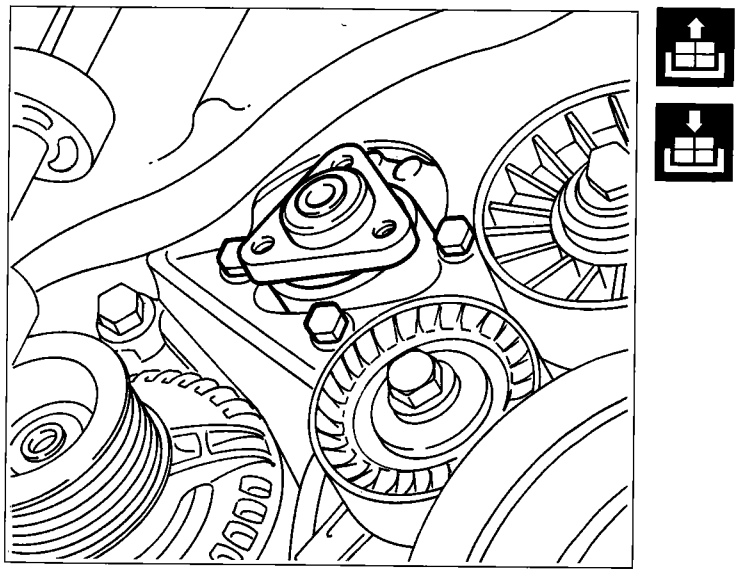

P4F020F03

- undo the bolts securing the power steering pump and remove it.

NOTE *To refit the power steering pump, reverse the procedure for removal.*

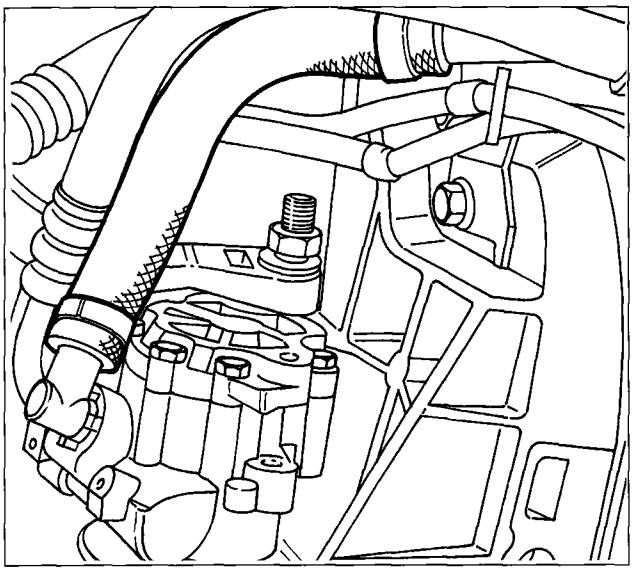

P4F021F01

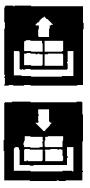

Removing-refitting

Before removing the power steering pump, drain the fluid from the reservor and disconnect the battery's negative pole.

NOTE *Do not re-use the old fluid. The level must be topped up with fresh fluid.*

To remove the power steering pump, proceed as follows:
- disconnect the fluid inlet pipe from the power steering pump;

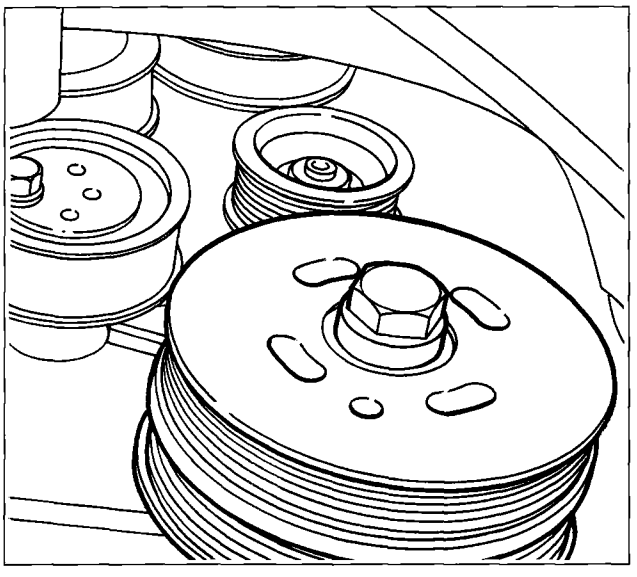

P4F021F02

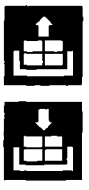

- after slackening and removing the belts in accordance with the procedure stated in Section 10, undo the bolt and remove the pulley from the power steering pump;

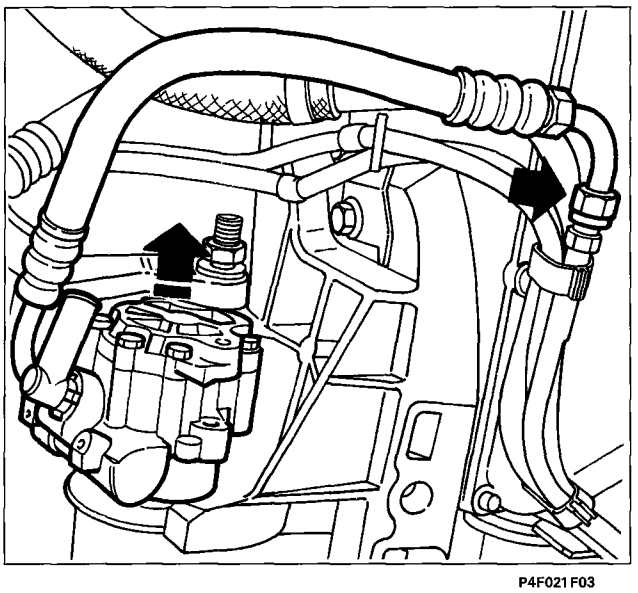

P4F021F03

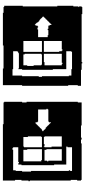

- undo the delivery pipe union (arrowed), then withdraw the pump with the hose.

NOTE *To refit the power steering pump, reverse the procedure for removal, then refit and tension the belts as described in Section 10.*

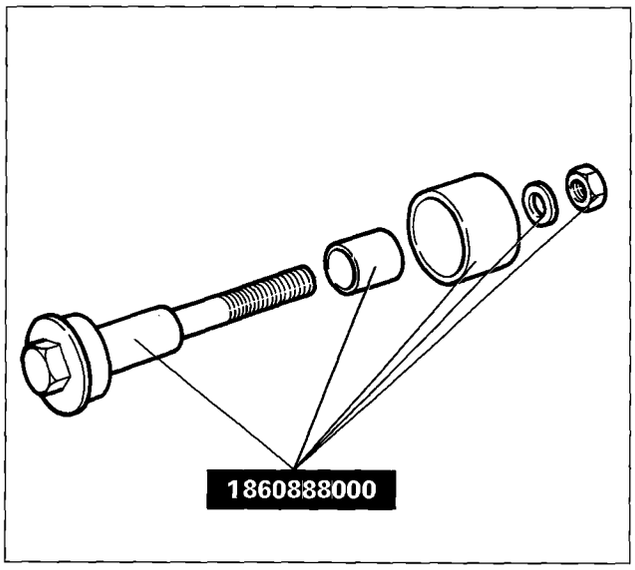

P4F022F01

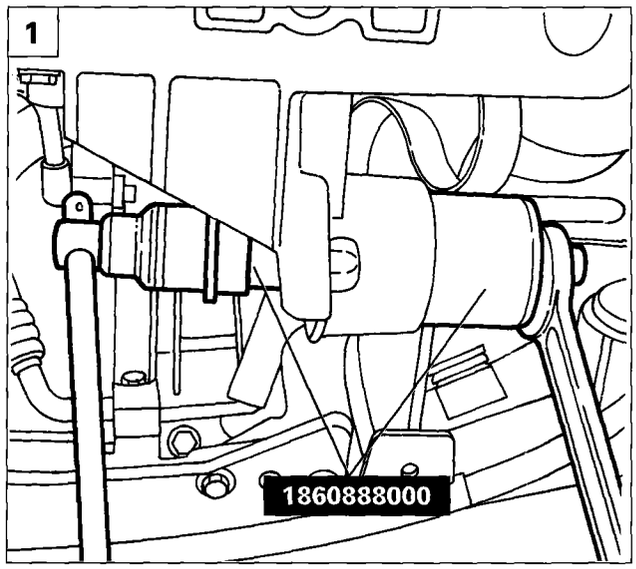

P4F022F02

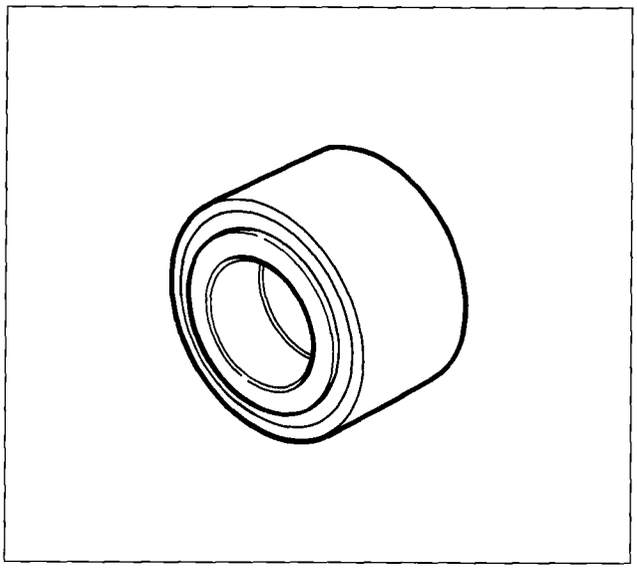

P4F022F03

Dismantling-reassembly power steering pump

1. Remove the retaining ring and fit tool 1860888000 as shown in the figure, then tighten the nut until the bearing has been fully withdrawn;
2. fit the tool 1860888000 as shown in the figure, then tighten the nut until the bearing has been fully inserted; then refit the retaining ring.

Lubricate the bearings and tools before final assembly.

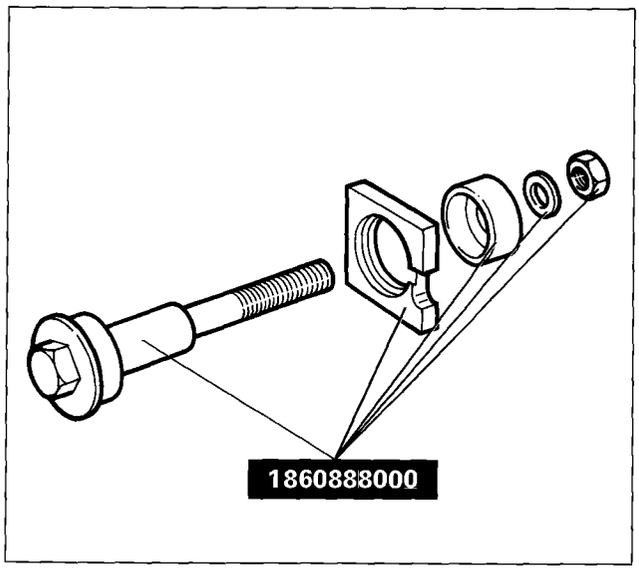

P4F022F04

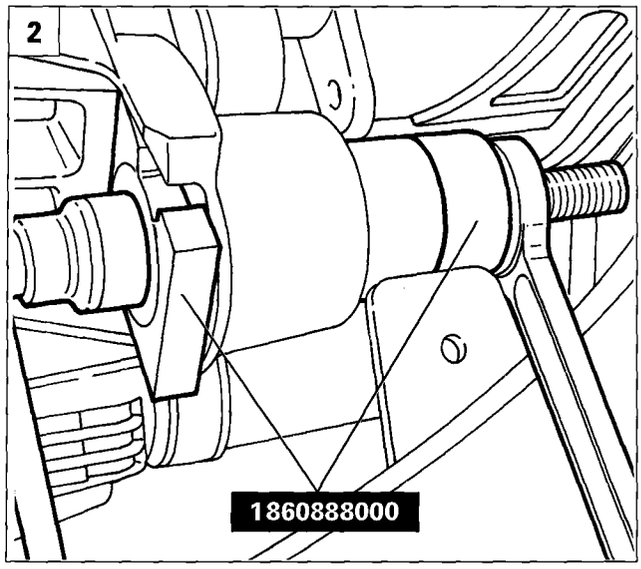

P4F022F05

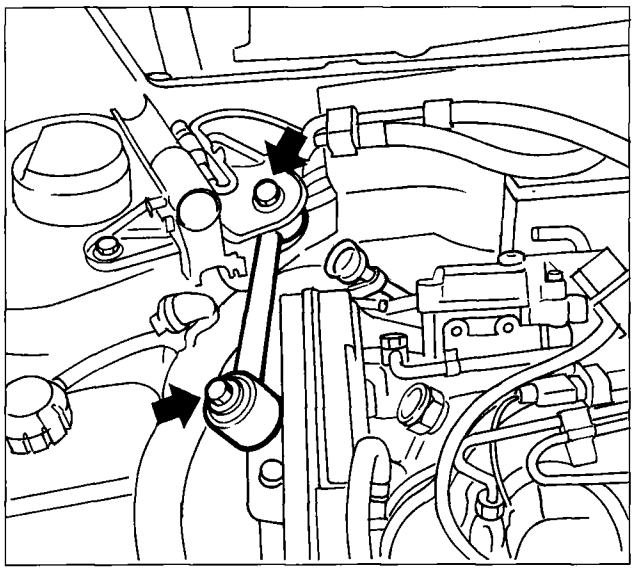

P4F023F01

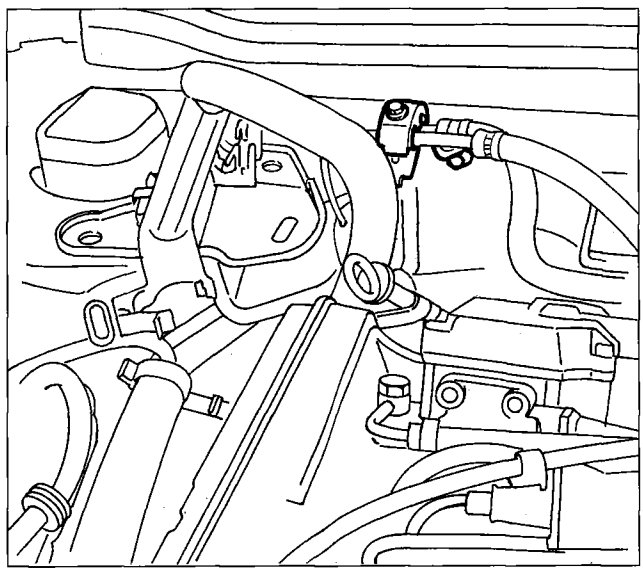

P4F023F02

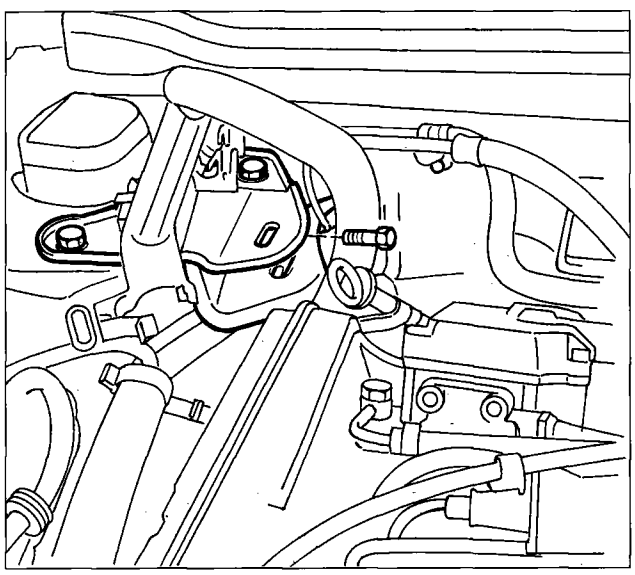

P4F023F03

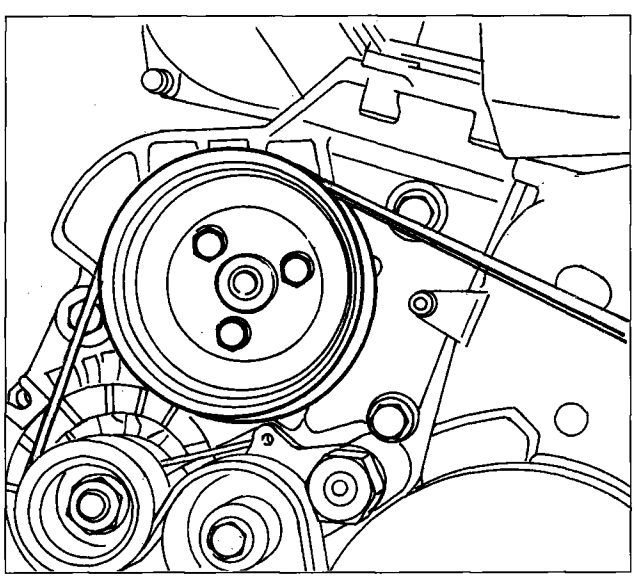

P4F023F04

Removing - refitting

Place the car on ramps, disconnect the battery's negative pole, then proceed as follows:

1. Remove the reaction link by undoing the bolts illustrated.
2. Undo the two bolts indicated and remove the fuel pipe retaining bracket.
3. Remove the reaction link mounting from the suspension mounting.
4. Slacken the bolts securing the power steering pump pulley.

Remove the auxiliary components drive belt as described in Section 10 and remove the alternator as described in Section 55.

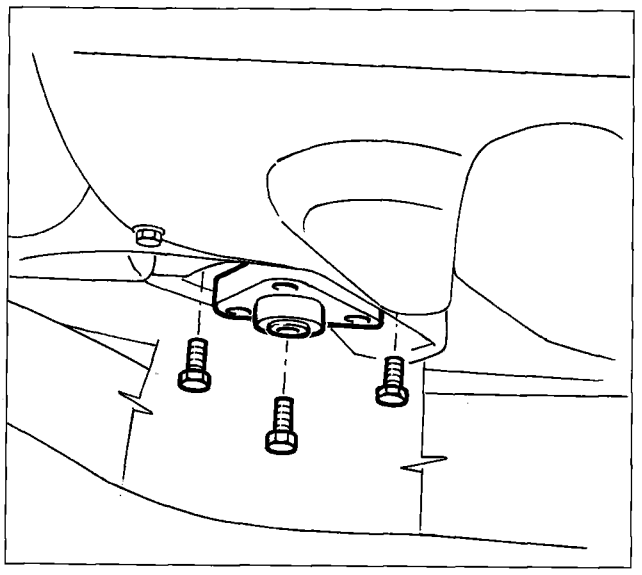

P4F024F01

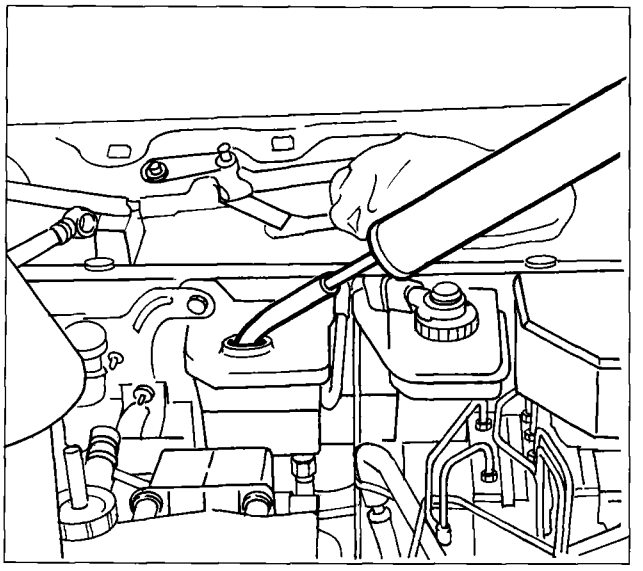

P4F024F02

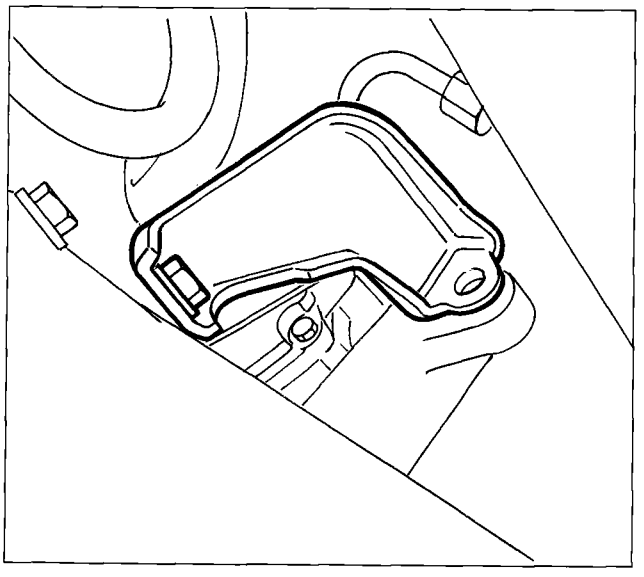

P4F024F03

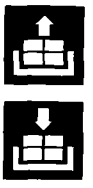

1. Remove the power steering pump pulley by unscrewing the previously slackened bolts, then unscrew the front bolts securing the power steering pump to the mounting bracket.
2. Drain the fluid from the pump reservoir, collecting it in a suitable container. Do not re-use the old fluid, and instead top up the level with fresh fluid.
3. Raise the ramps, then remove the power steering pump rear bracket.
4. Withdraw the pump from its seating, disconnect the fluid delivery and return pipes on the pump at the points illustrated, then withdraw the power steering pump from the car.

NOTE *To refit the power steering pump, reverse the procedure for removal.*

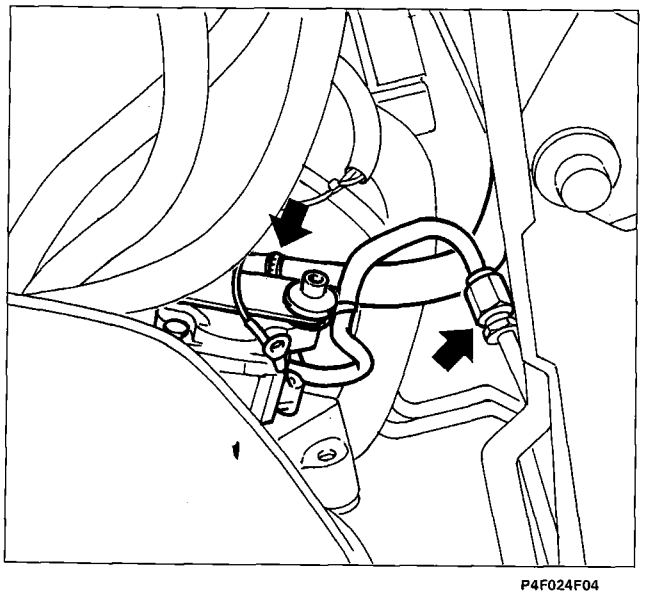

P4F024F04

At the time of going to print, the documentation relating to this engine was not yet available.

Copyright Fiat Auto

Contents

44.

page

FRONT SUSPENSION

- Diagram of front suspension assembly 1
- Wishbone and steering subframe 1
- Spring-shock absorber assembly 5
- Vertical link and wheel hub 7
- Components of the front suspension supplied as spares 13

REAR SUSPENSION

- Diagram of rear suspension assembly 15
- Removing-refitting 16
- Dismantling-reassembly 21
- Stub axle-Rear wheel hub 23
- Components of the rear suspension supplied as spares 27

WHEEL GEOMETRY

- Front wheel geometry 28
- Rear wheel geometry 29

Copyright Fiat Auto

DIAGRAM OF FRONT SUSPENSION ASSEMBLY

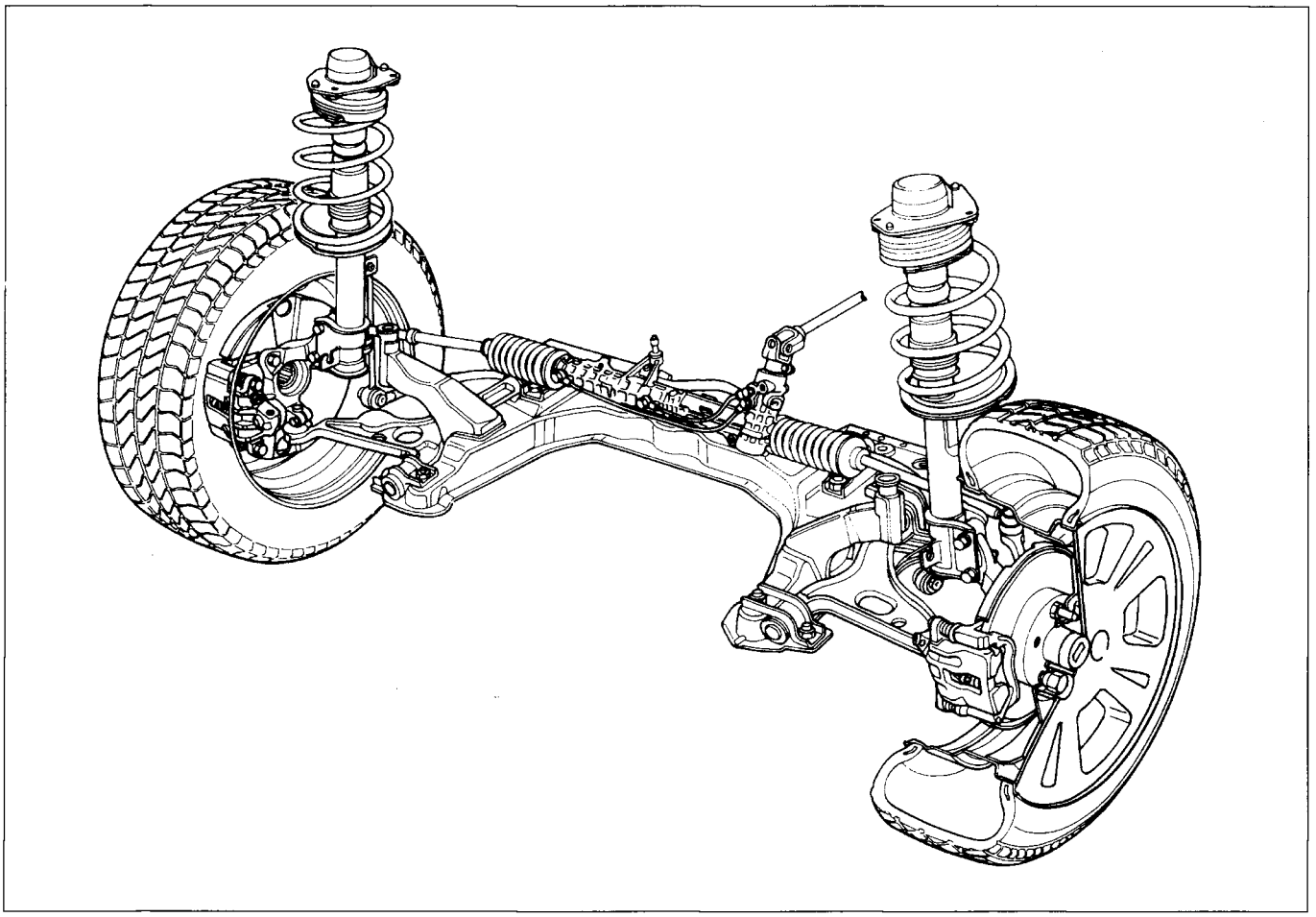

P4F001G01

WISHBONE AND STEERING SUBFRAME

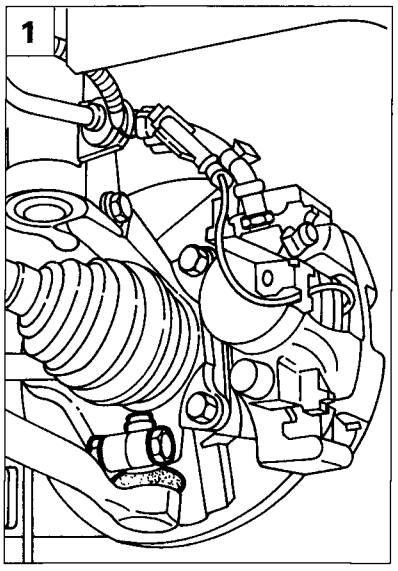

P4F001G03

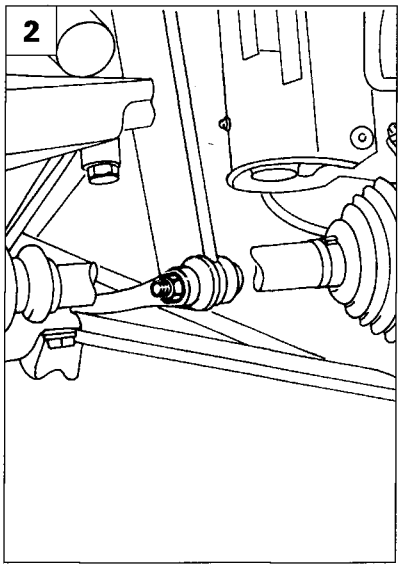

P4F001G02

Removing

To remove the wishbone and steering subframe, place the vehicle on ramps, remove the front wheels and the front section of the exhaust pipe, then carry out the following operations:

1. undo the bolt securing the wishbone balljoint to the vertical link;

2. Undo the nut securing the link between the anti-roll bar and shock absorber, and disconnect the link;

Copyright Fiat Auto

44.

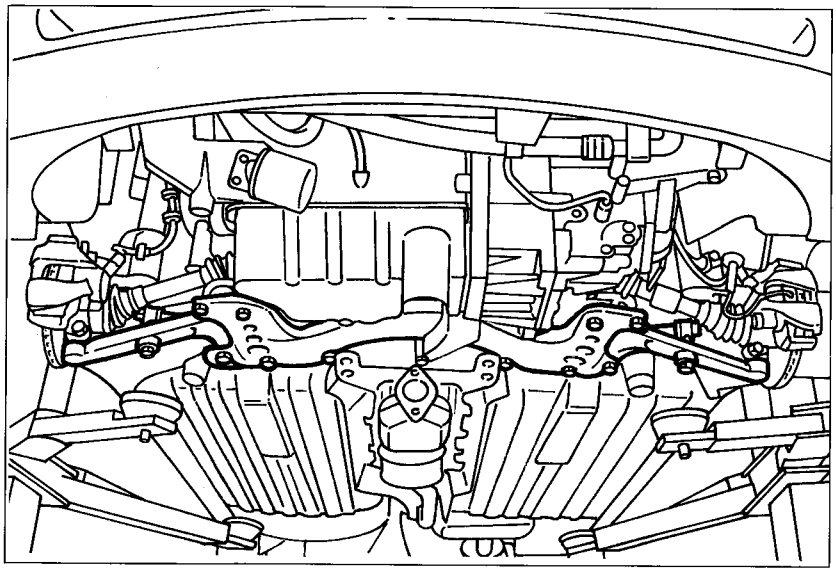

P4F002G01

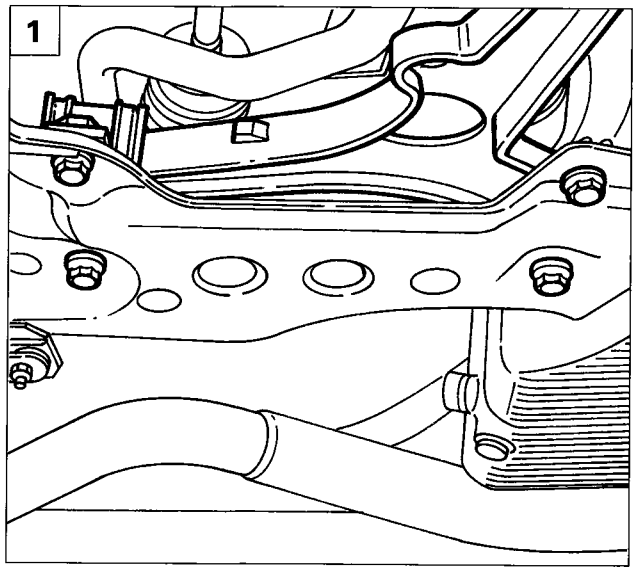

P4F002G02

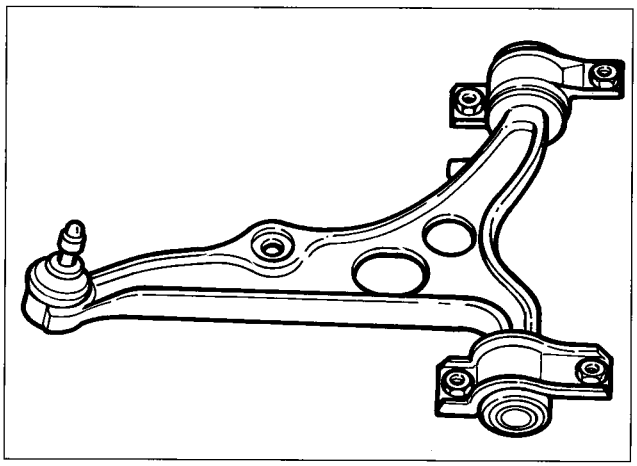

P4F002G03

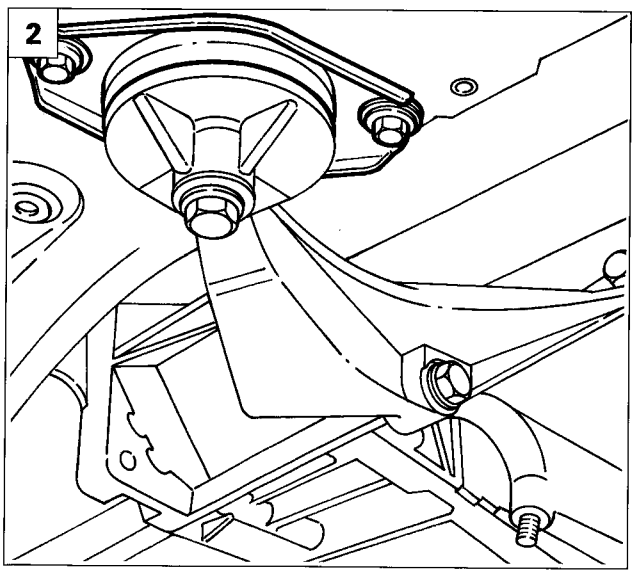

P4F002G04

1. undo the bolts securing the wishbone to the steering subframe and remove the wishbone;

2. undo the bolts securing the power unit mounting, differential side, to the sub-frame;

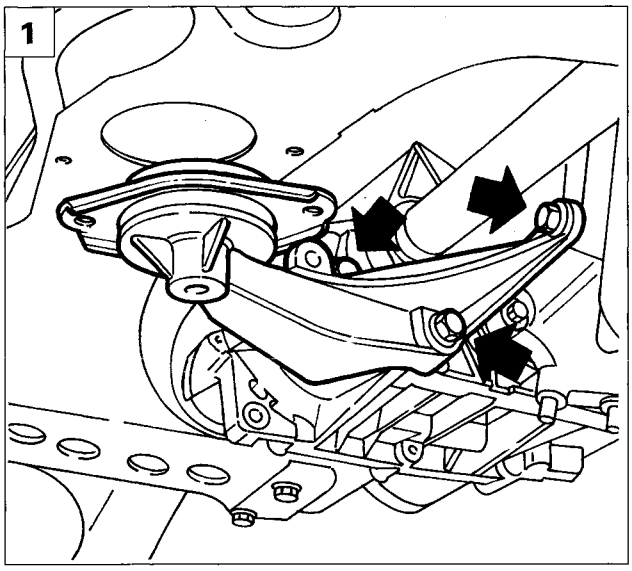

P4F003G01

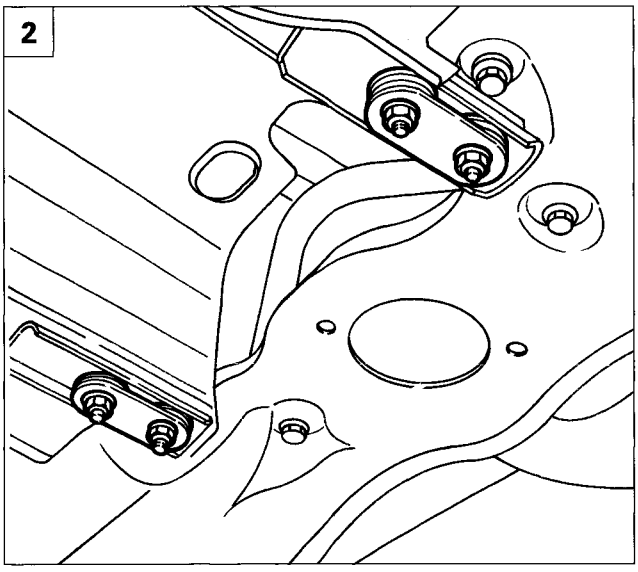

P4F003G02

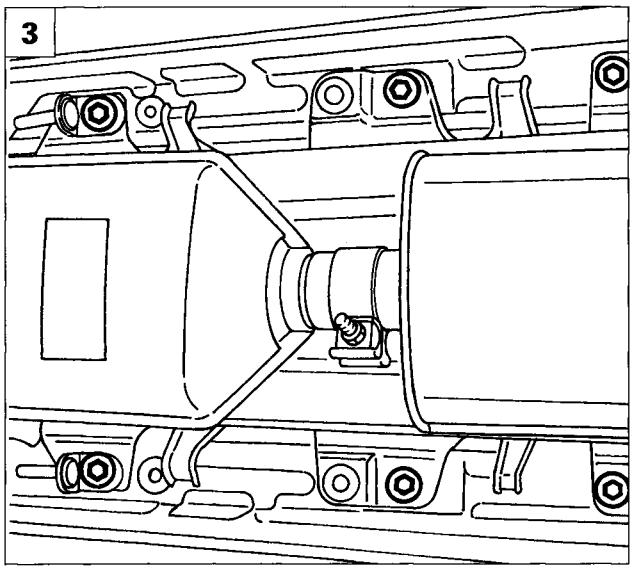

P4F003G03

1. undo the bolts securing the power unit mounting bracket to the gearbox;
2. undo the bolts securing the heat shield;
3. undo the bolts securing the heat shield;
4. remove the heat shield;
5. undo the bolts securing the steering box to the steering subframe;

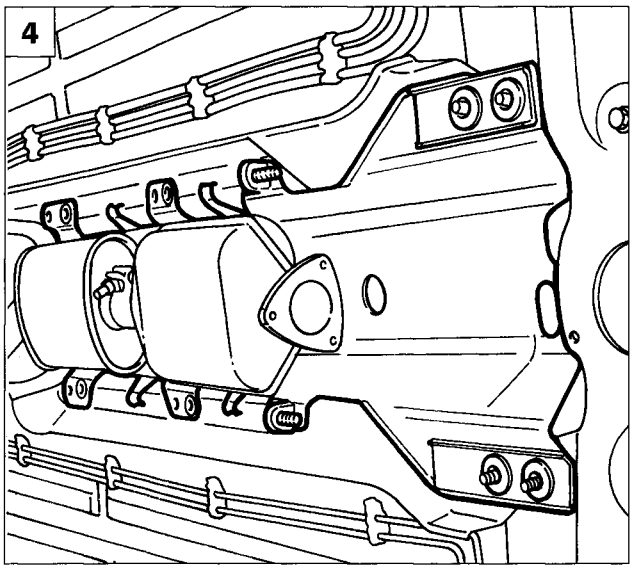

P4F003G04

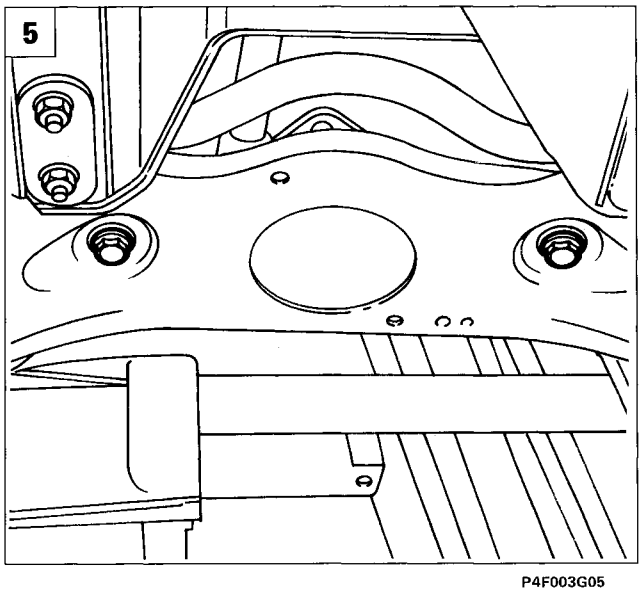

P4F003G05

Copyright Fiat Auto

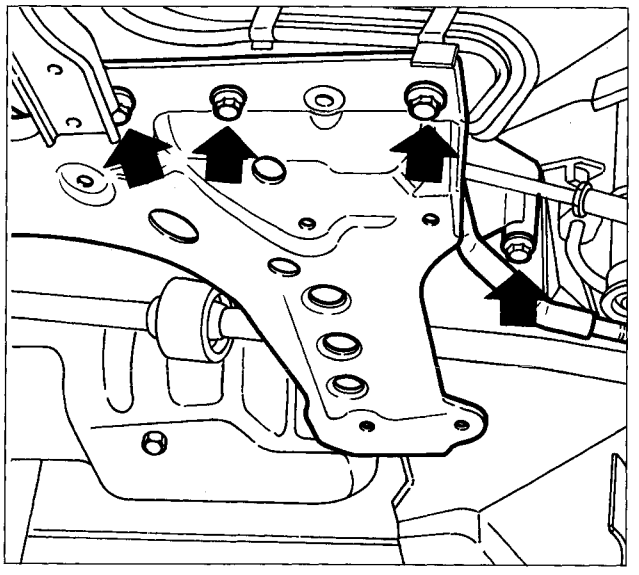

P4F004G01

1. Place a column hydraulic jack under the steering subframe, then undo the bolts securing the subframe to the body shell (arrowed); slowly lower the jack and remove the steering subframe.

Refitting

NOTE *To refit the steering subframe and wishbone, reverse the procedure for removal.*

Check the front wheel toe-in whenever the steering subframe or wishbones are removed-refitted.

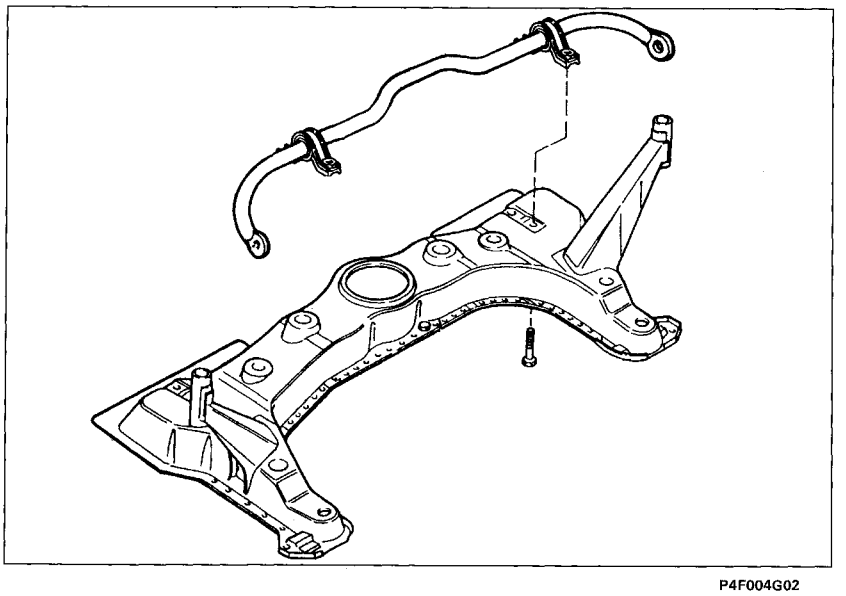

P4F004G02

Dismantling-reassembly of anti-roll bar from steering subframe

Checking anti-roll bar

The rubber mountings and the bar itself must not show signs of damage, otherwise they will have to be replaced.

Checking steering subframe

Check that the steering subframe is not cracked or deformed such as to impair its efficiency.

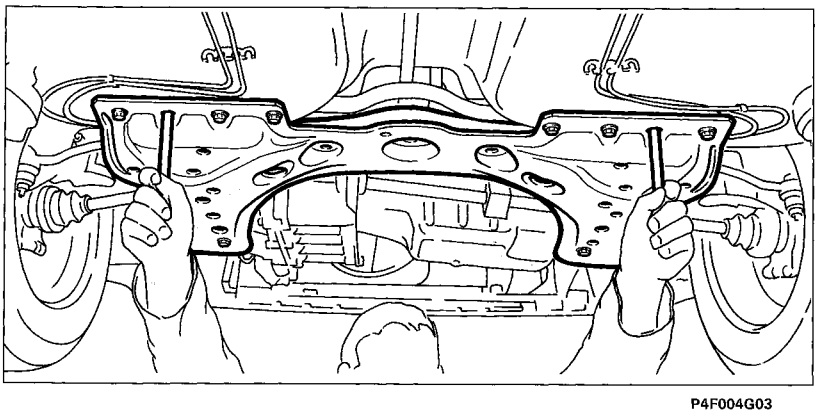

P4F004G03

Refitting steering subframe to body shell

The subframe must be secured temporarily, centred using two pins with a diameter of around 12 mm, and then secured finally.

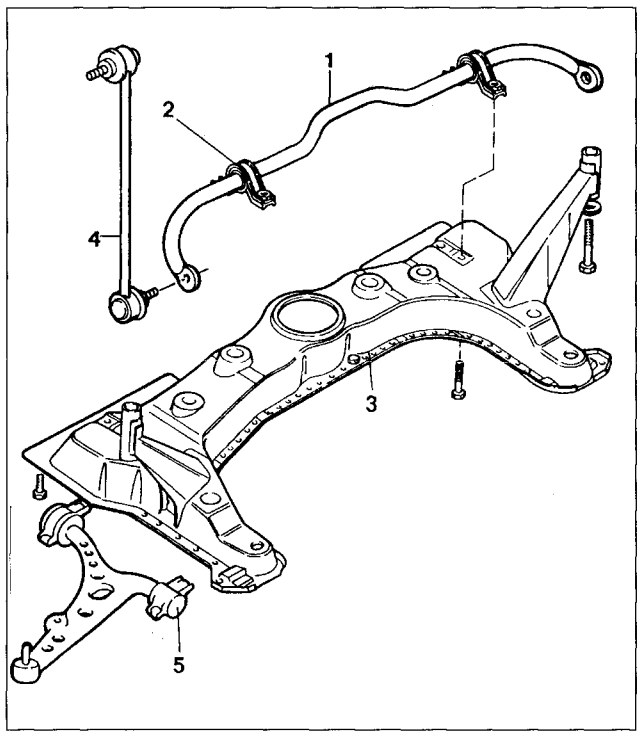

P4F005G01

Components of the front suspension supplied as spare parts

1. Anti-roll bar
2. Bracket securing anti-roll bar to steering subframe
3. Steering subframe
4. Link connnecting anti-roll bar to shock absorber
5. Wishbone

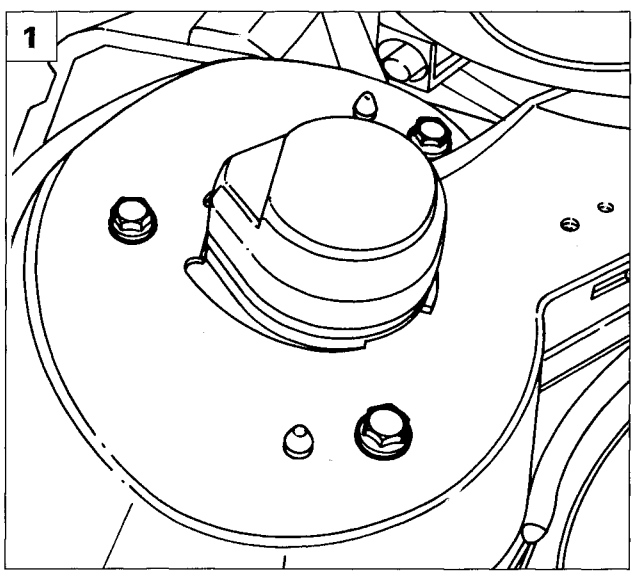

P4F005G02

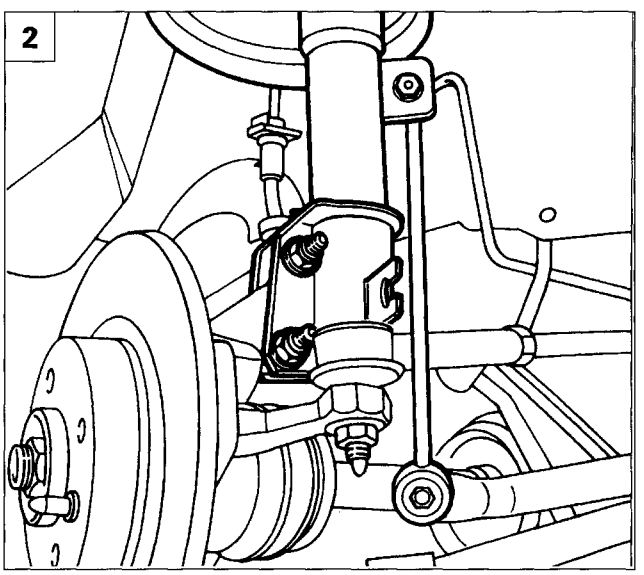

P4F005G03

SPRING-SHOCK ABSORBER ASSEMBLY

Removing-refitting

To remove the spring-shock absorber assembly, proceed as follows:

1. Undo the bolts securing the shock absorber top plate to the body shell;
2. undo the bolts securing the shock absorber to the vertical link and remove the coil spring assembly and damper.

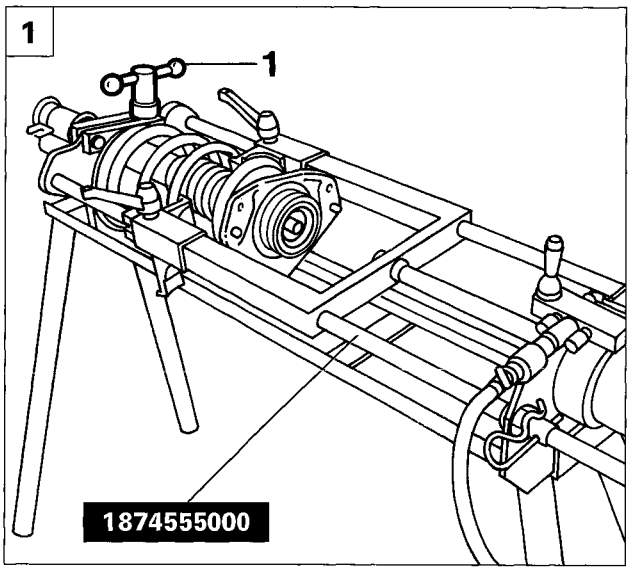

P4F006G01

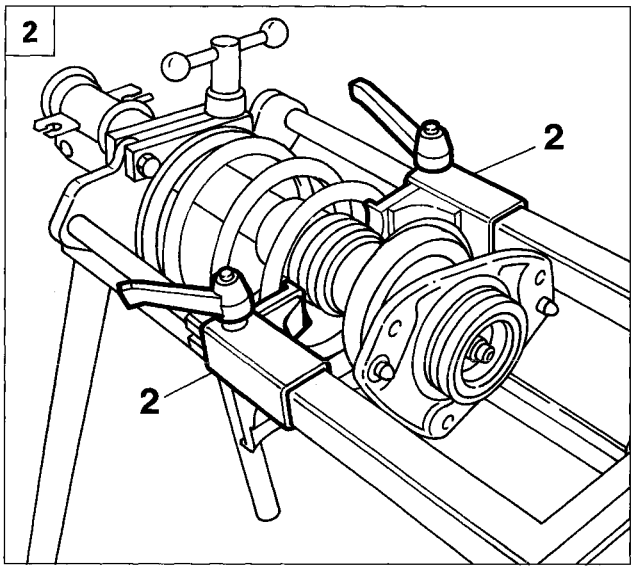

P4F006G02

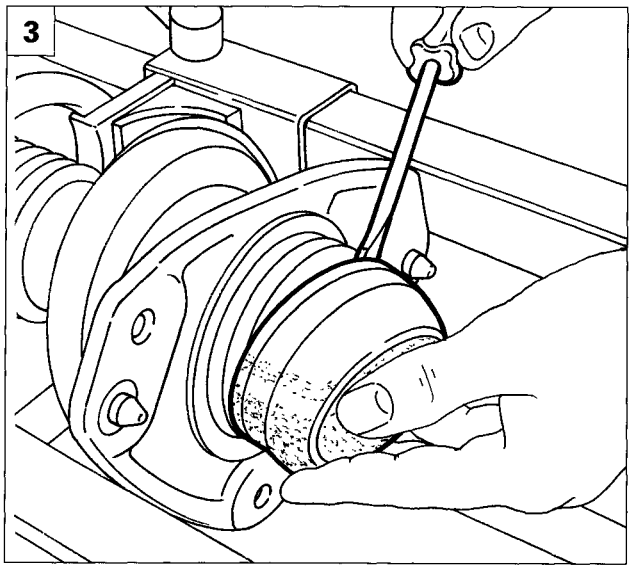

P4F006G04

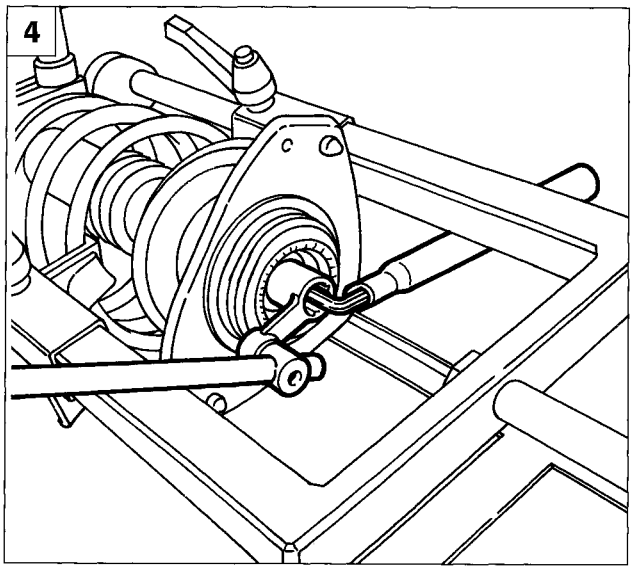

P4F006G03

Dismantling-reassembly

Separate the coil spring from the damper by carrying out the following operations:

1. place the spring-shock absorber assembly on the pneumatic tool 1874555000 and operate the lever (1) to lock it;

2. adjust the position of the hooks (2), bringing them up to the spring, then put pressure on the tool until the spring begins to compress;

3. remove the dust excluder using a screwdriver;

4. undo the nut securing the top plate to the shock absorber strut and remove the plate, then withdraw the spacer, spring and end-of-travel stop.

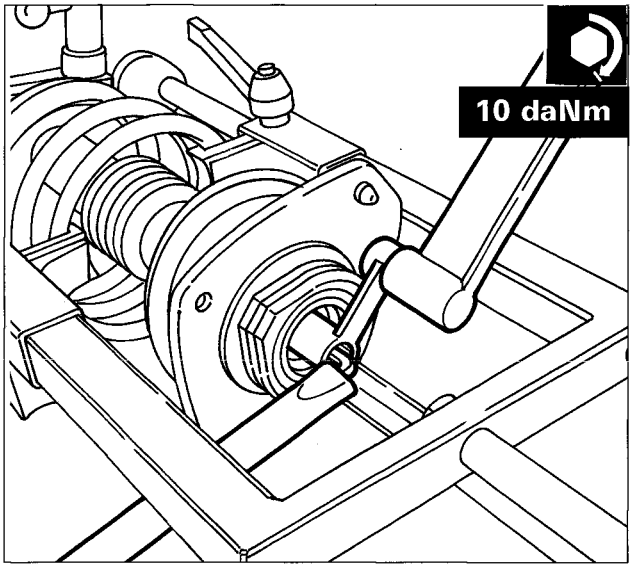

P4F007G01

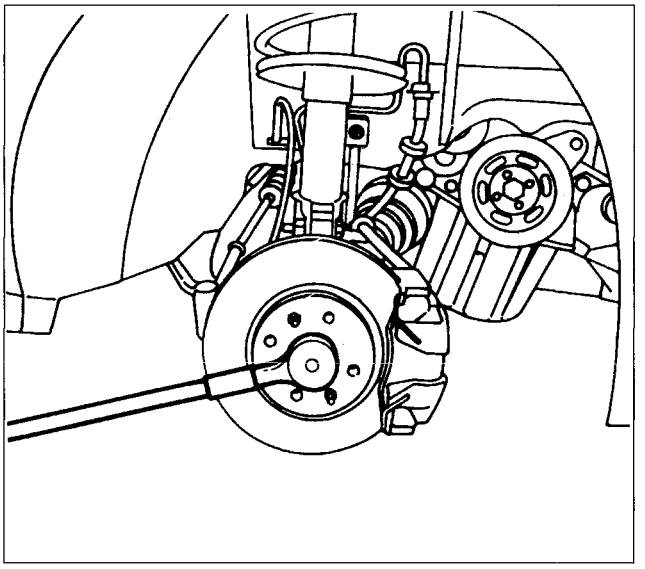

P4F007G02

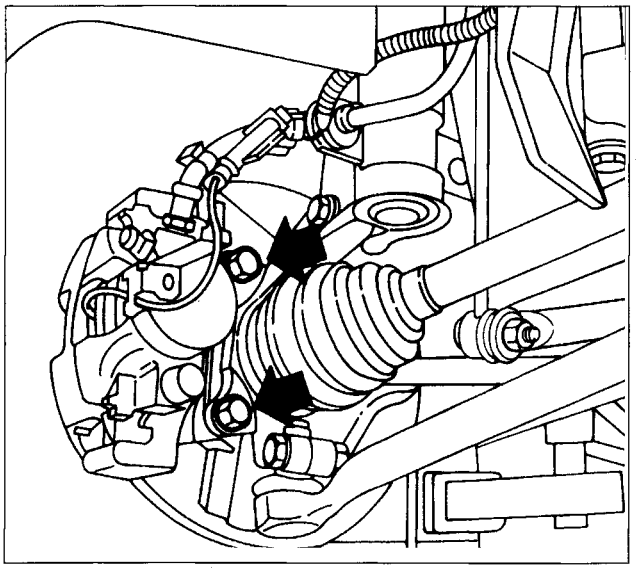

P4F007G03

NOTE *The coil springs are divided into two categories, which can be identified by means of a paint mark on the central coil.*
Springs of the same category must be fitted.

1. Refit the components in reverse order, tighten the shock absorber strut nut to the correct torque, then refit the dust excluder.

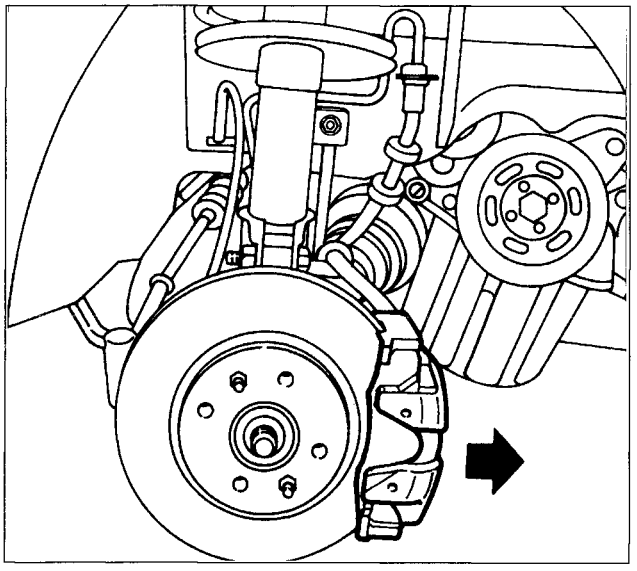

P4F007G04

VERTICAL LINK AND WHEEL HUB

Removing

To remove the vertical link and wheel hub, proceed as follows:

2. undo the nut securing the front wheel hub to the stub axle;
3. undo the bolts securing the brake caliper to the vertical link;
4. remove the brake caliper complete with mounting bracket and secure it in the wheelarch without disconnecting the brake pipe;

44.

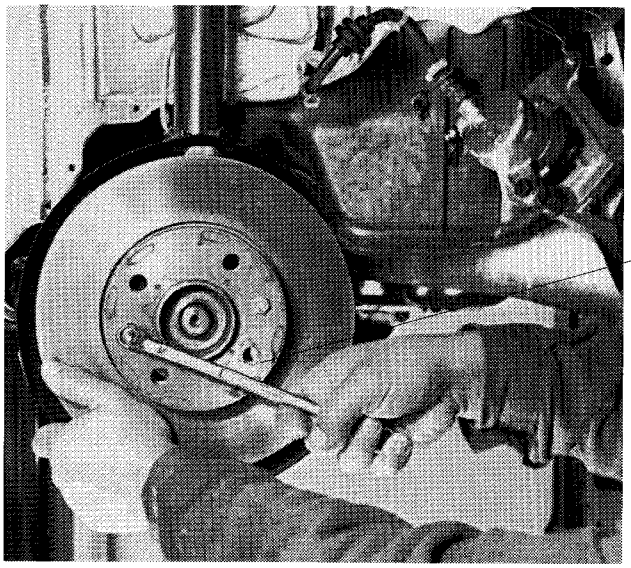

P4F008G01

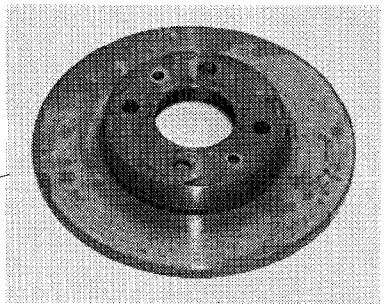

P4F008G02

- undo the bolts and remove the brake disc;

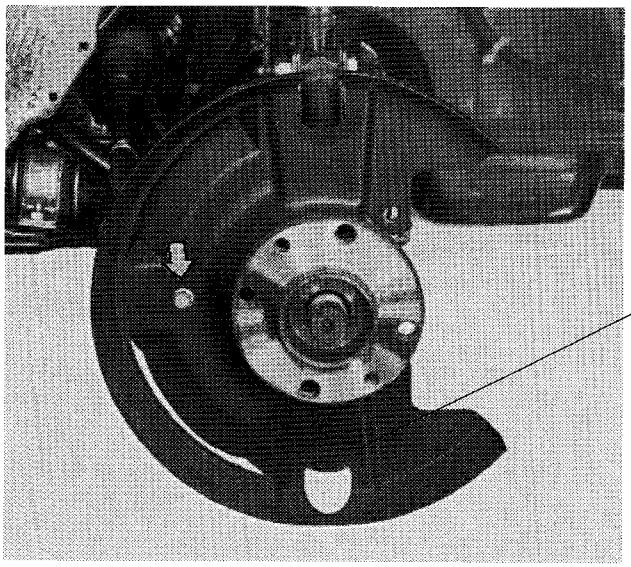

P4F008G03

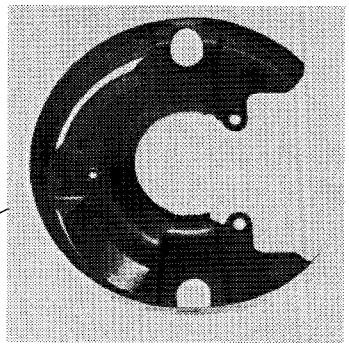

P4F008G04

- undo the screw and remove the dust shield;

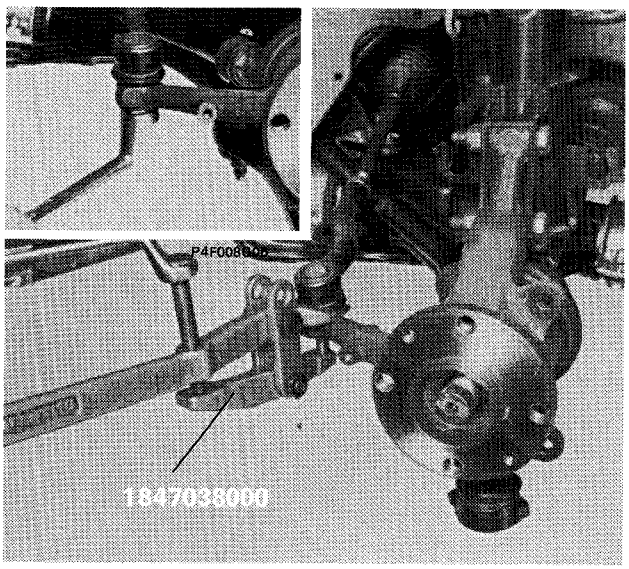

P4F008G05

- undo the nut securing the tie rod end to the tie rod, then remove the tie rod using tool 1847038000;

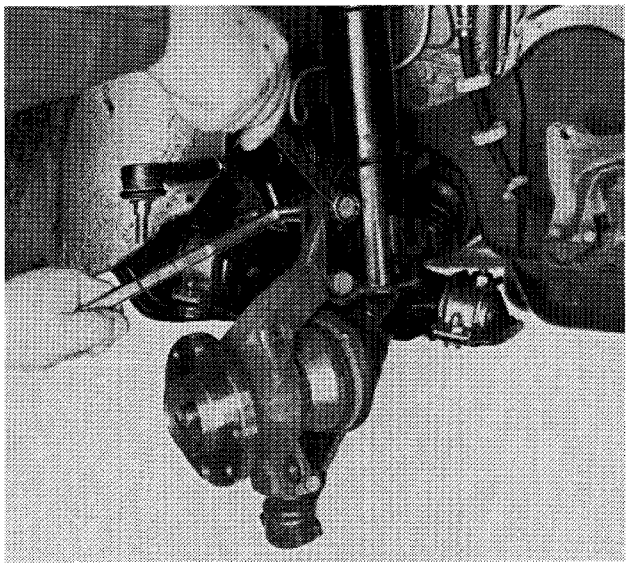

P4F010G01

- undo the bolts securing the spring-shock absorber assembly to the vertical link;

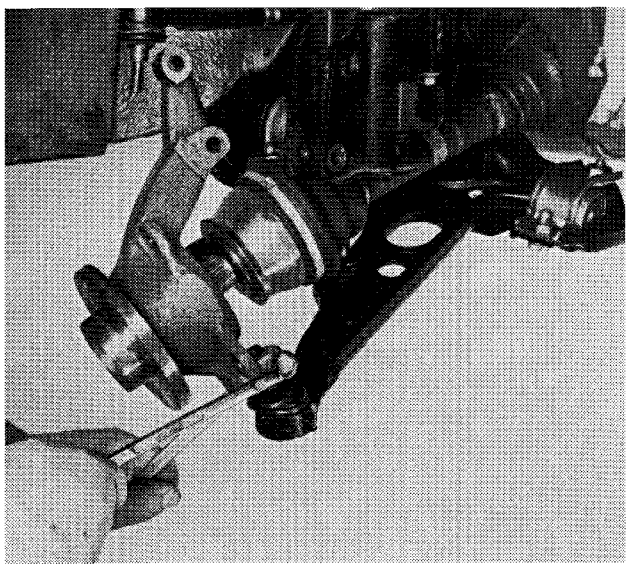

P4F010G02

- undo the bolt securing the wishbone ball joint to the vertical link and remove the vertical link.

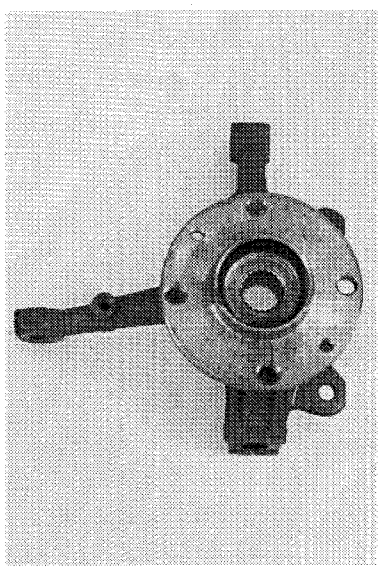

P4F009G03

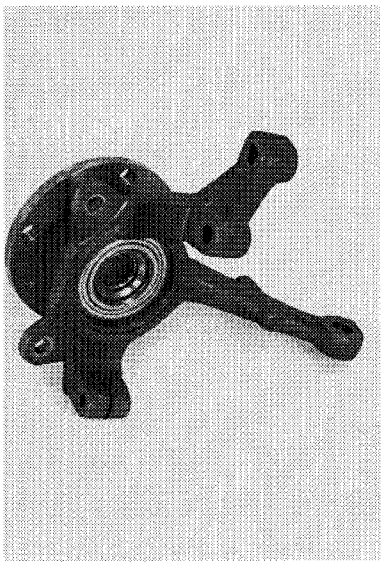

P4F009G04

Front and rear view of vertical link complete with hub

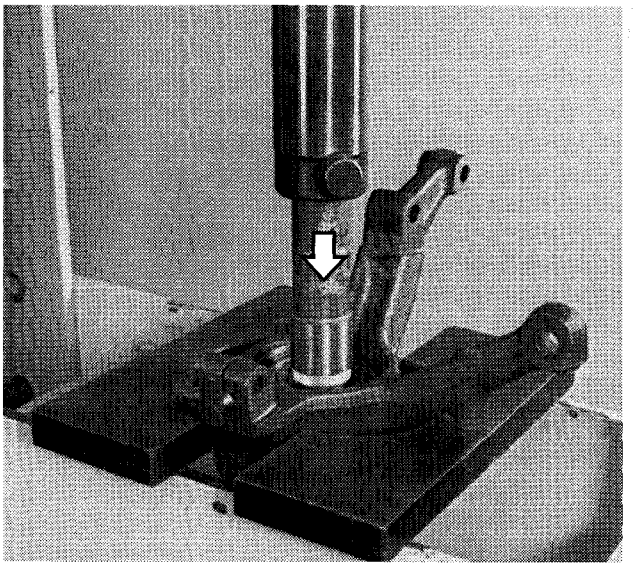

P4F010G01

Dismantling

To dismantle the vertical link and hub, proceed as follows:

- dismantle the wheel hub from the vertical link using a press;

P4F010G02

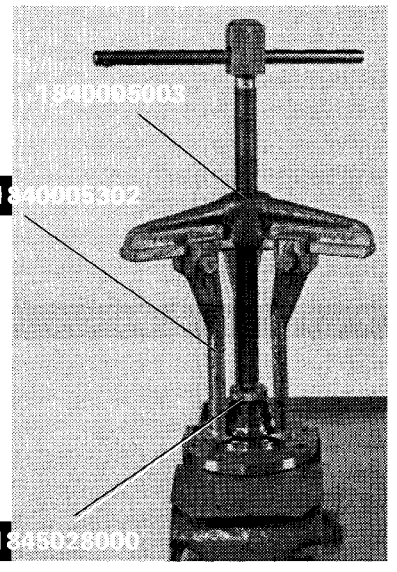

P4F010G03

- use a chisel to shift the bearing inner race from the hub, then withdraw the bearing using the tools indicated;

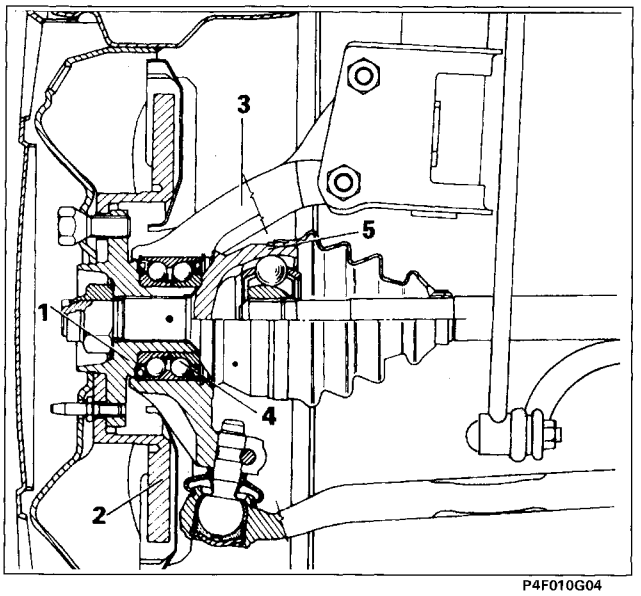

P4F010G04

Longitudinal section of front wheel hub and disc brake

1. Wheel hub
2. Brake disc
3. Vertical link
4. Ball bearing
5. Constant velocity joint

P4F011G02

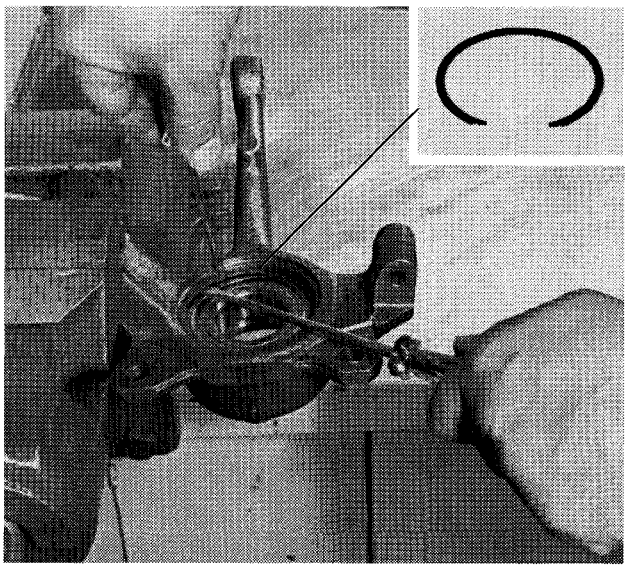

P4F011G01

- remove the circlip which secures the bearing outer race;

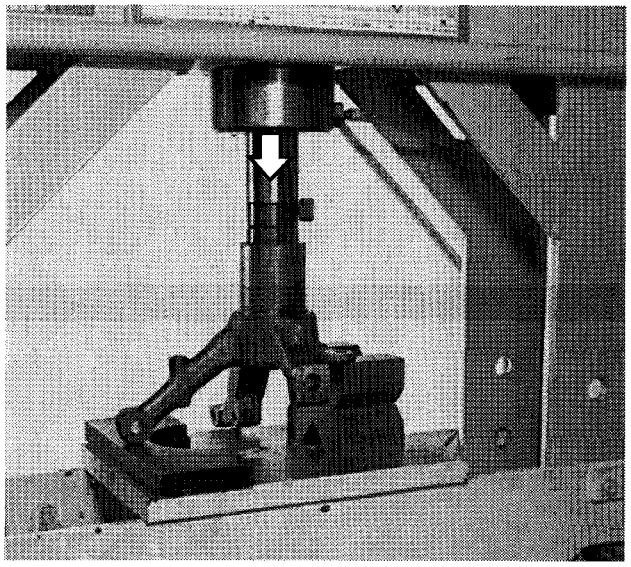

P4F011G03

- on a press, dismantle the bearing outer face from the vertical link.

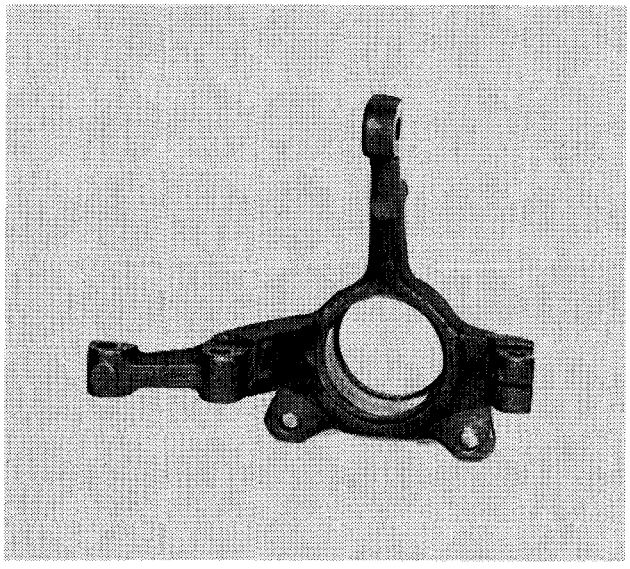

P4F011G04

Checking vertical link

Check that the internal surfaces do not show signs of seizure, that the wishbones show no signs of impact or breakage, otherwise the entire vertical link will have to be replaced.

44.

P4F012G04

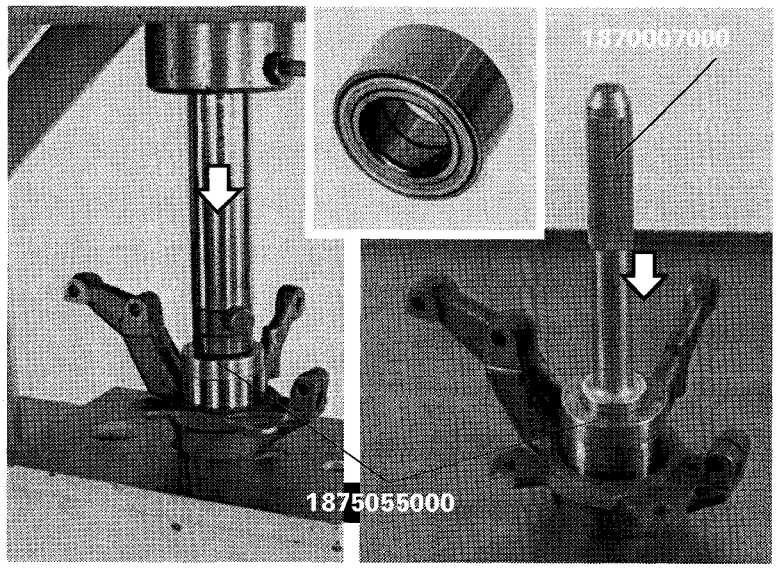

P4F012G01 P4F012G02

Refitting

The bearing can be fitted into the vertical link either using a press, or the handle 1870007000.
Then fit the bearing circlip.

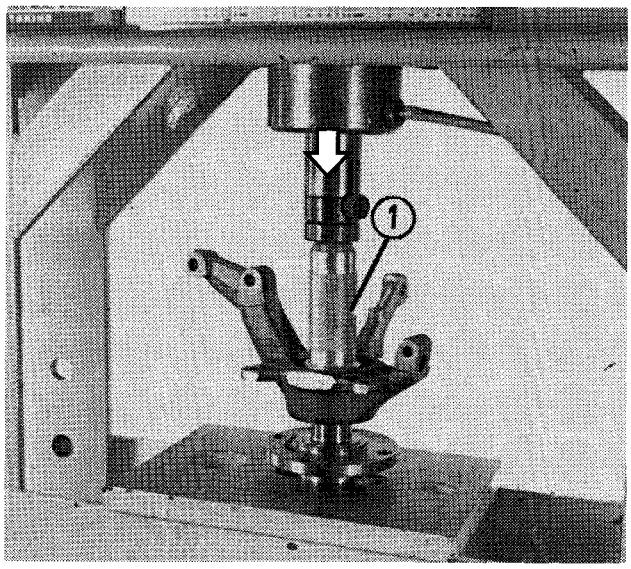

P4F012G03

Using a press, fit the hub in the bearing on the vertical link, supporting the bearing inner race using a cylinder (1) of suitable diameter.

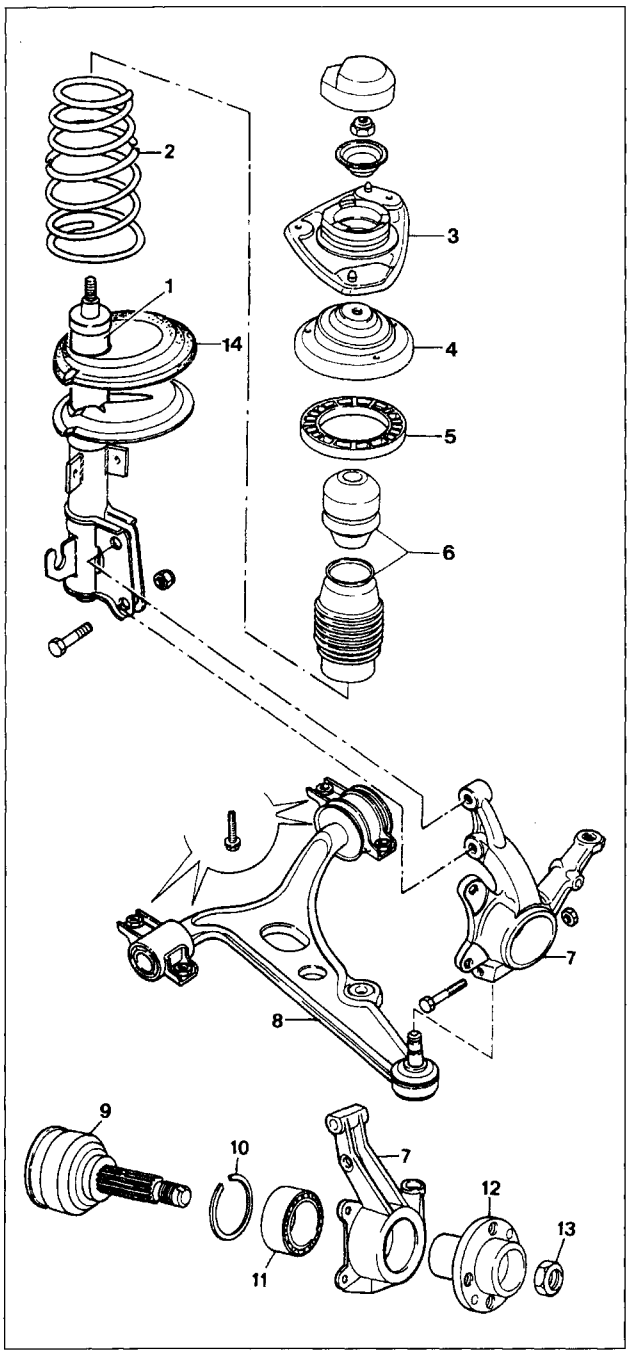

P4F013G01

1. Shock absorber
2. Coil spring
3. Shock absorber top plate
4. Spacer
5. Top rubber ring supporting spring
6. End-of-travel tube and stop
7. Vertical link
8. Wishbone
9. Constant velocity joint with stub axle
10. Bearing circlip
11. Ball bearing
12. Wheel hub
13. Nut securing wheel hub
14. Bottom rubber ring supporting spring

COMPONENTS OF THE FRONT SUSPENSION SUPPLIED AS SPARE PARTS

Parts of the shock absorber top mounting

Check that the parts do not have faults such as to impair their efficiency.

Shock absorber

If faults are found in the shock absorber, the latter should always be replaced completely.

Coil spring

Make sure that it is not cracked or deformed such as to impair its efficiency.

NOTE *The coil springs are distinguished by a yellow or green strip of paint on the central coil. Springs of the same category must be fitted.*

Wishbone

Check that the wishbone is not deformed, that there is no excessive play in the balljoint, that the dust excluder is not damaged and that the rubber bushes are not worn, otherwise the entire wishbone will have to be replaced.

44.

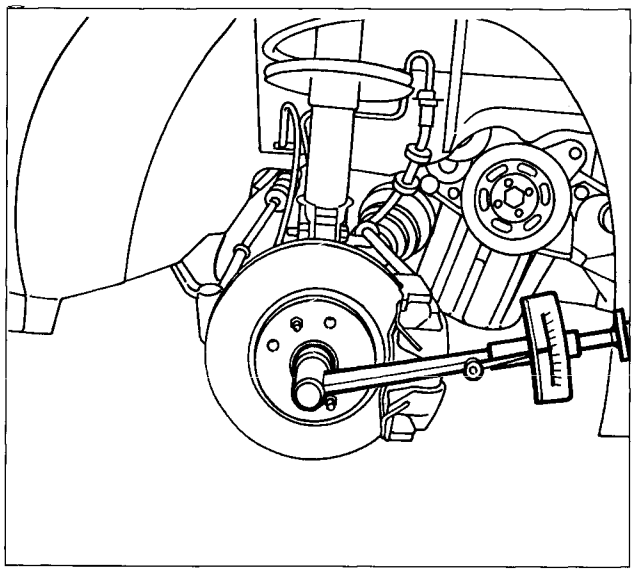

P4F014G01

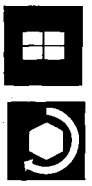

NUT M22 7[illegible] daNm + 55°
NUT M24 7[illegible] daNm + 62°

Fitting and tightening wheel hub nut to torque

The nuts securing the constant velocity joints to the wheel hubs must always be replaced.

Also check:

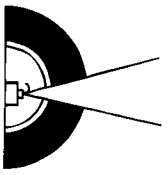

Front wheel geometry

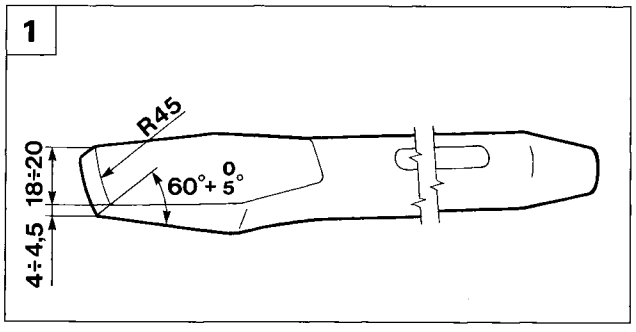

P4F014G02

Staking wheel hub nut

To stake the nut, proceed as follows:

- always use a new nut;
- thoroughly clean the threaded end of the drive shaft using a metal brush and then blow with compressed air;

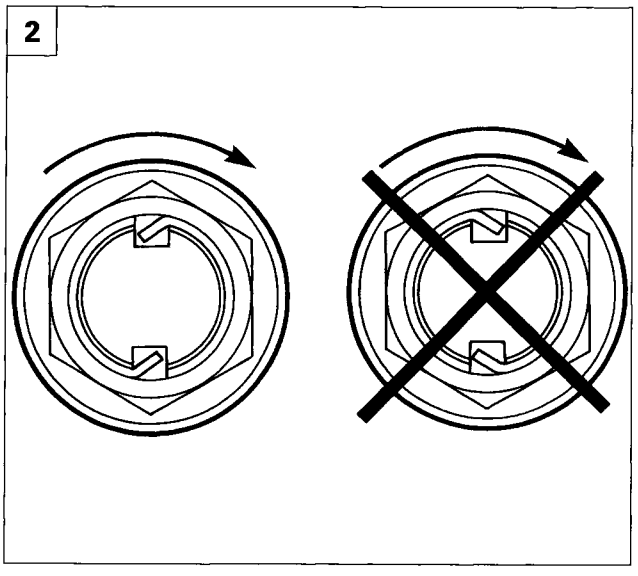

P4F014G03

- clean the thread of the new nut and threaded end of the drive shaft with disposable paper towel dampened with ethyl alcohol or heptane;
- tighten the new nut to the specified torque;
- stake the nut collar using the chisel shown in Figure 1 (the chisel should be constructed on site, in accordance with the dimensions showon on the drawing, obtaining it from article USAG 362 or similar).

The collar must be cut on the hub notch on the side opposite that of tightening the nut, so that the safety lug opposes accidental unscrewing (see Figure 2).

Service News

Copyright by Fiat Auto

2/97

FIAT

Fiat Auto S.p.A
D.M.C. - M.P.S. - Servizi Post Vendita
Assistenza Tecnica

Fiat Marea

version all versions

44

03.97

4410 0 000 AA **FRONT SUSPENSION**

correction of the wheel hub fixing nut tightening value given in the Service Manual

OPERATIONS IN THE NETWORK

As a correction to the information given on page 14 of section 44 of the Service Manual, print no. 506.763, we wish to point out that the wheel hub fixing nut tightening figure is as follows:

- NUT M22	**7 daNm + 55° rather than**	**NUT M22**	**70 daNm + 55°**
- NUT M24	**7 daNm + 62° rather than**	**NUT M24**	**70 daNm + 62°**

Please be so kind as to make a note, by hand, of the correct figure in the above mentioned publication

DIAGRAM OF REAR SUSPENSION ASSEMBLY

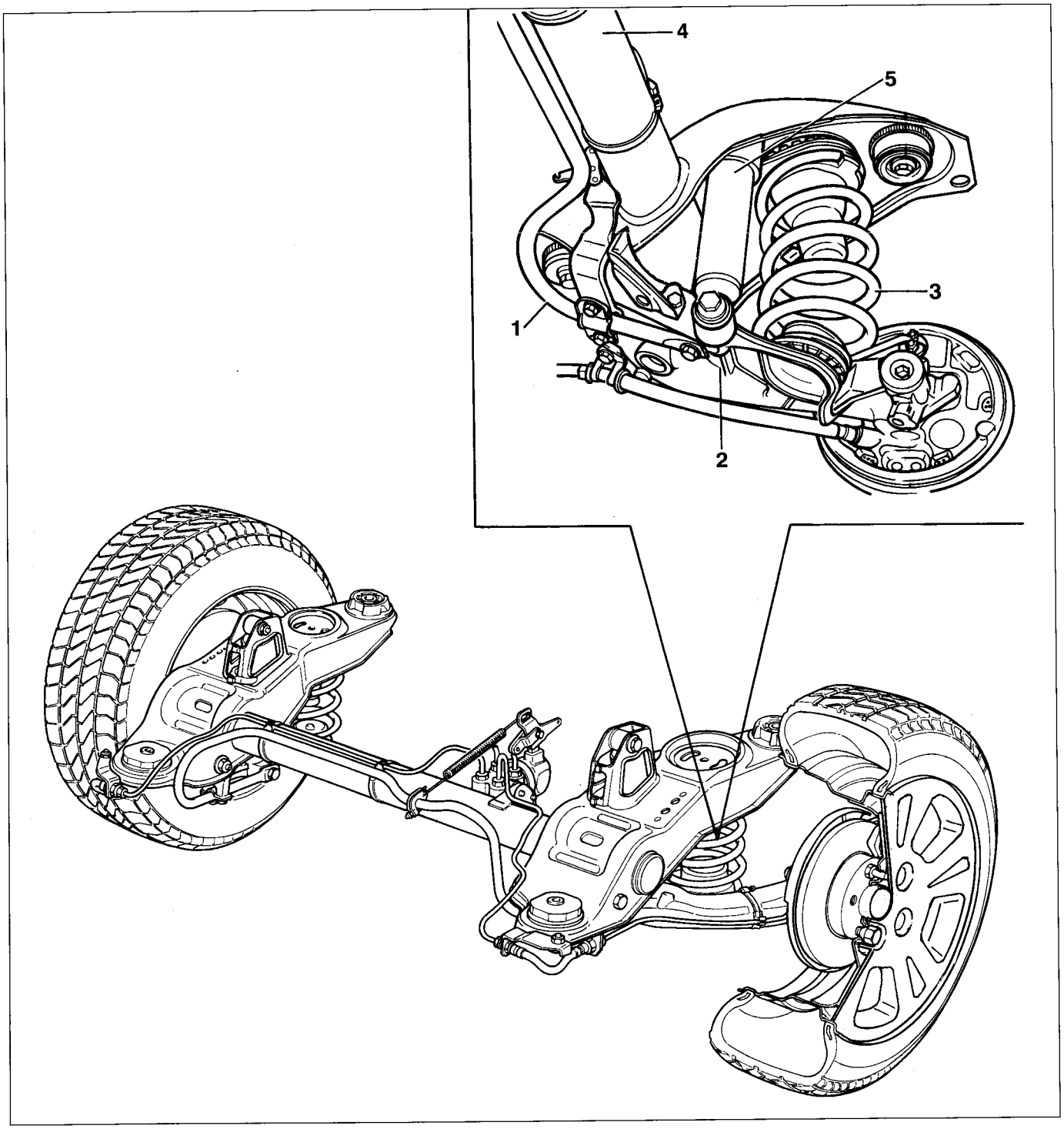

P4F015G01

1. Stabilizer bar
2. Trailing arm
3. Spring
4. Torsion bar
5. Shock absorber

Copyright Fiat Auto

44.

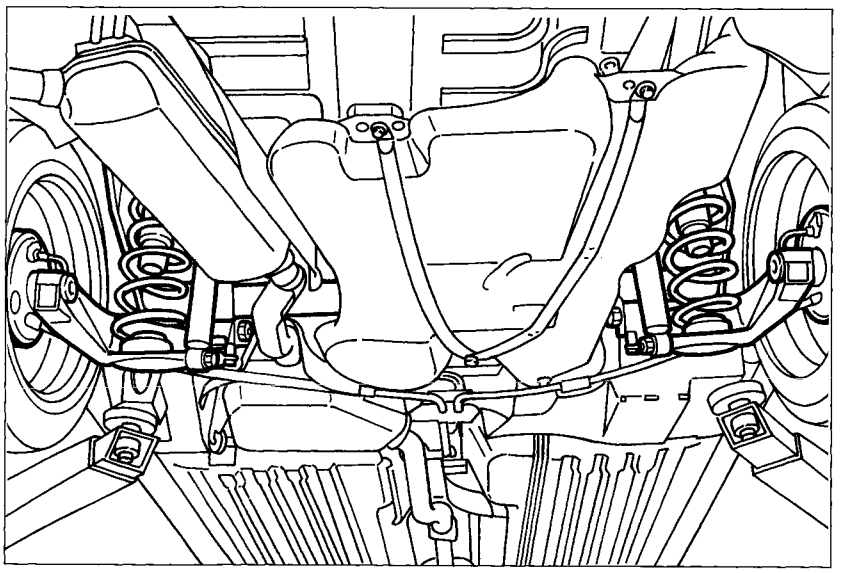

P4F016G01

REMOVING-REFITTING

NOTE *To be able to remove the rear suspension, remove the fuel tank and the rear section of the exhaust pipe.*

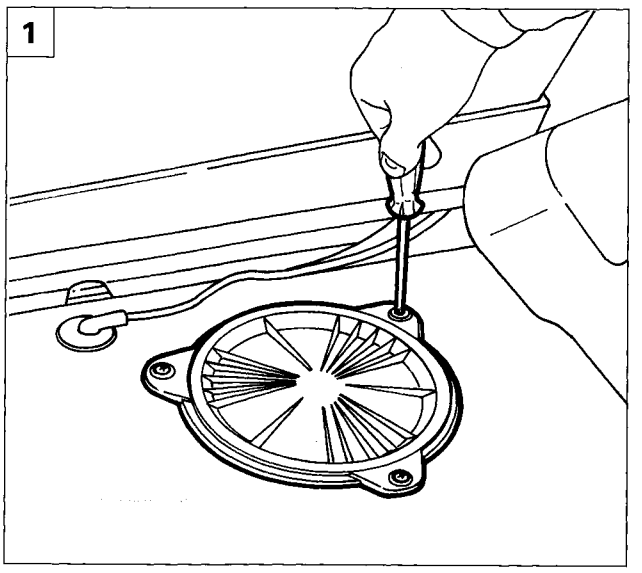

P4F016G02

Fuel tank

To remove the tank, proceed as follows:

1. remove the boot floor trim, undo the bolts and remove the plastic access cover;
2. disconnect the two electrical connectors;
3. undo the nut and disconnect the vent pipe (1) and, releasing the retaining lugs, disconnect the fuel delivery and return pipes (2);

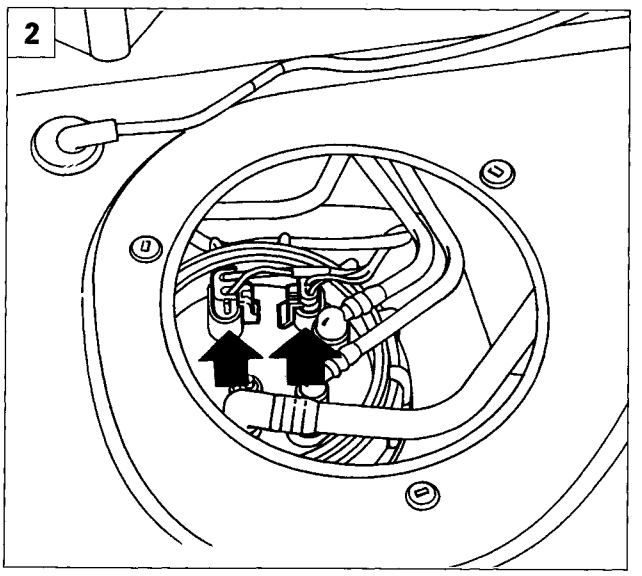

P4F016G03

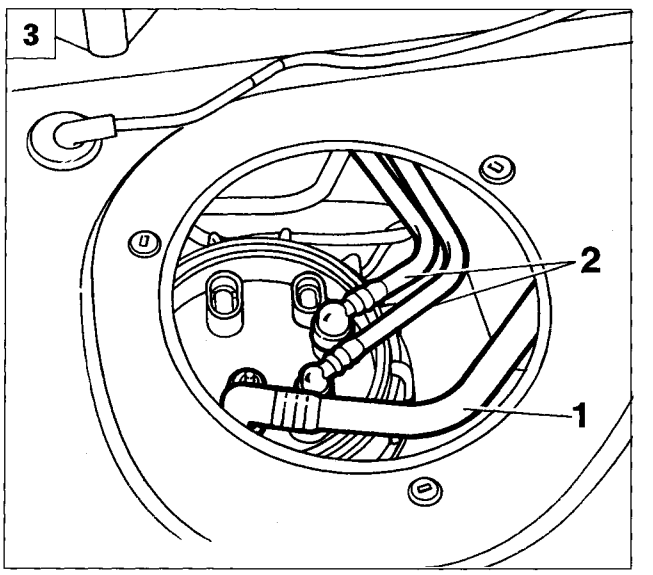

P4F016G04

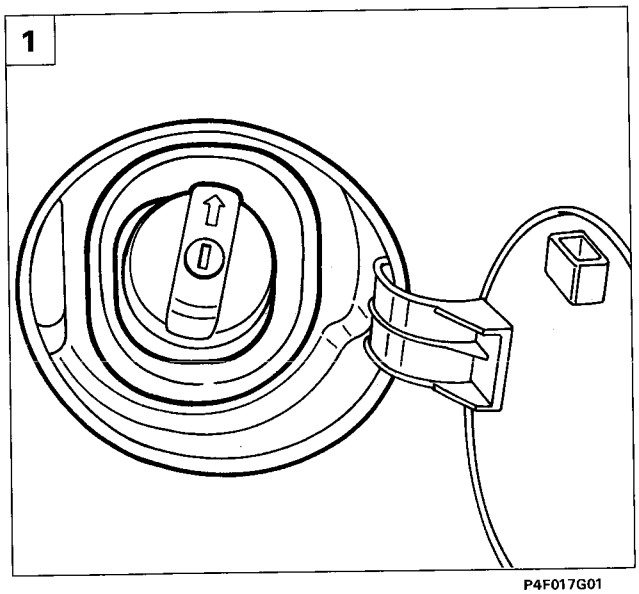

P4F017G01

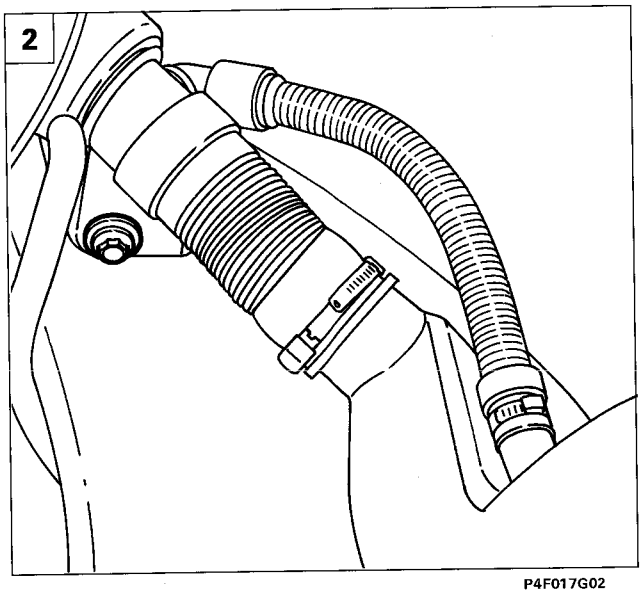

P4F017G02

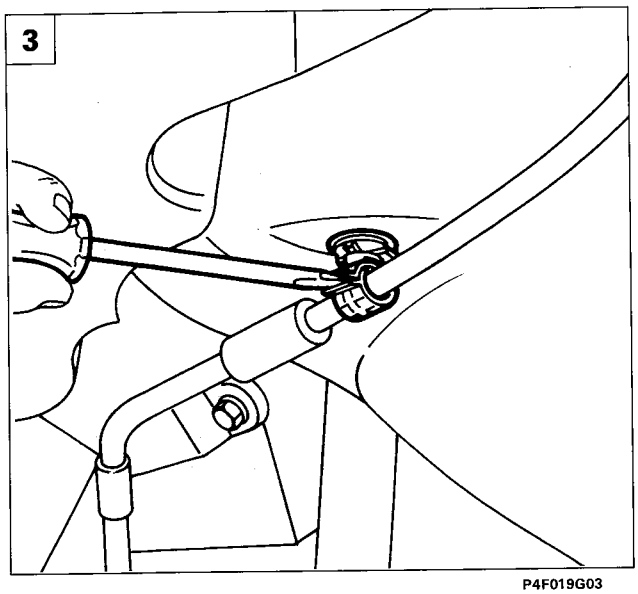

P4F019G03

1. remove the rubber trim on the fuel filler;
2. undo the bolt securing the filler to the body shell;
3. open the clips and release the handbrake cables;

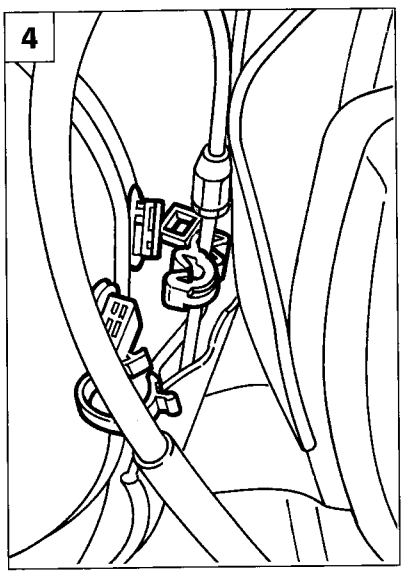

P4F017G04

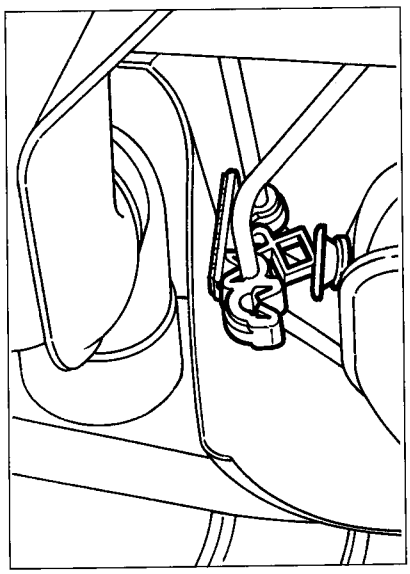

P4F017G05

4. disconnect the rear brake pipe attachments from the fuel tank;

Copyright Fiat Auto

44.

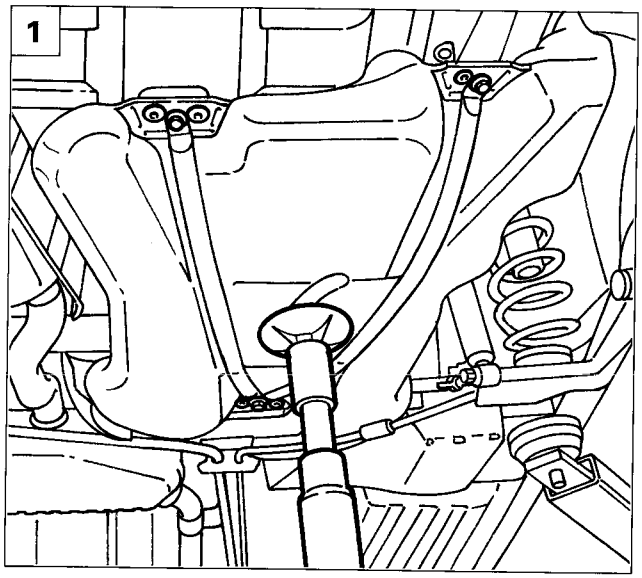

P4F018G01

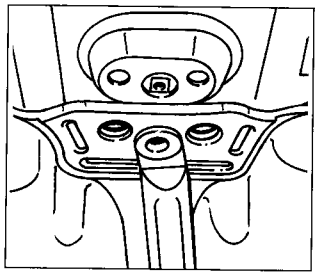

P4F018G02

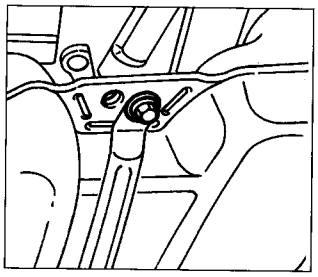

P4F018G03

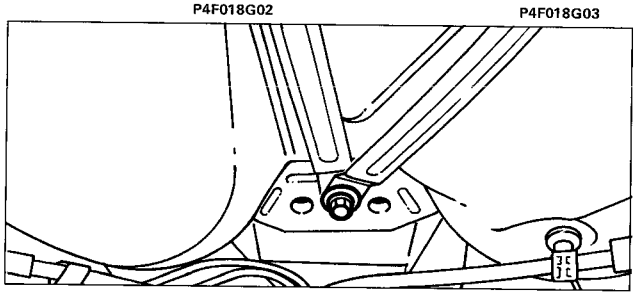

P4F018G04

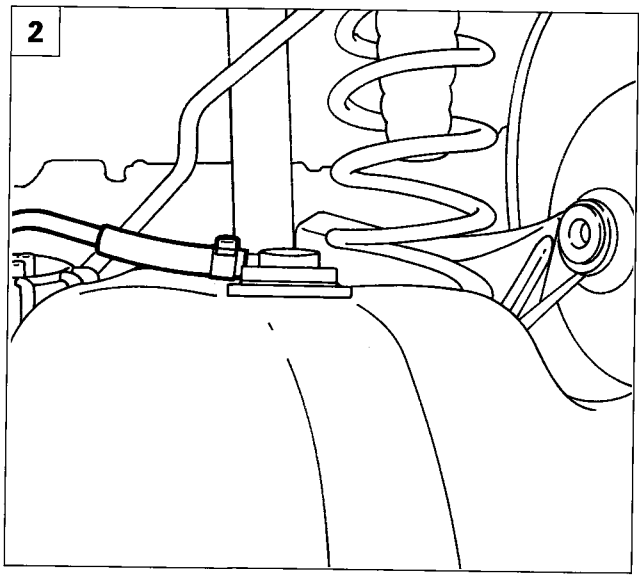

P4F018G05

1. place a column jack under the tank, undo the bolts and remove the attachment buttons shown, then slowly lower the fuel tank;

2. open the clip and disconnect the petrol vapour pipe;

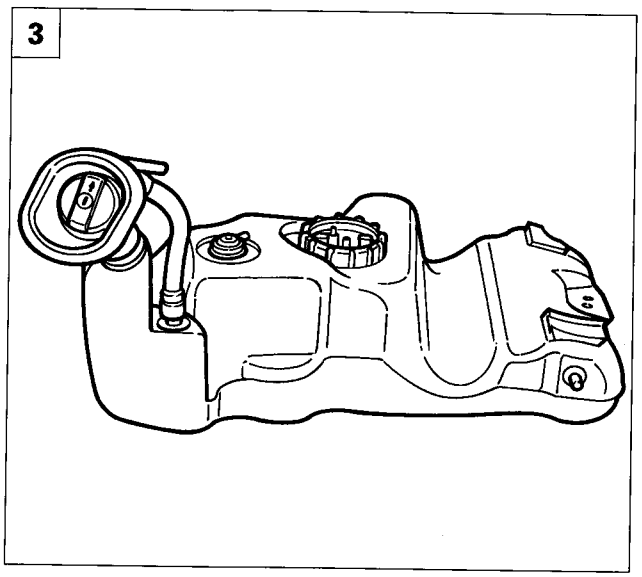

P4F018G06

3. fully lower the column jack and remove the tank.

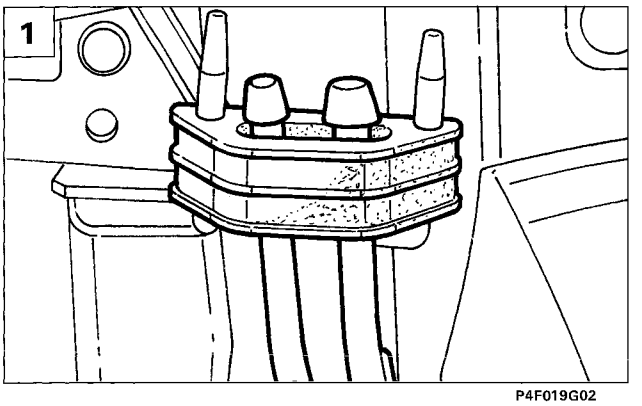

P4F019G02

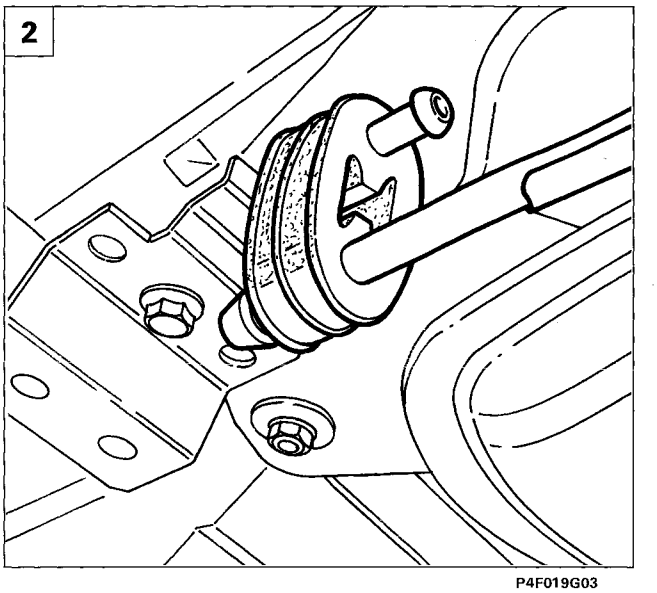

P4F019G03

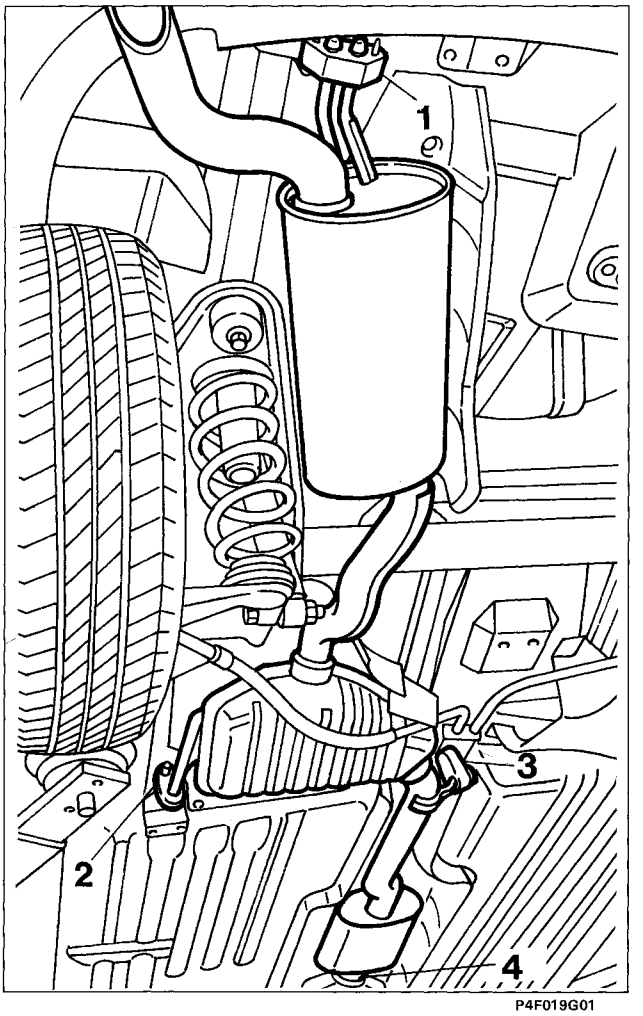

P4F019G01

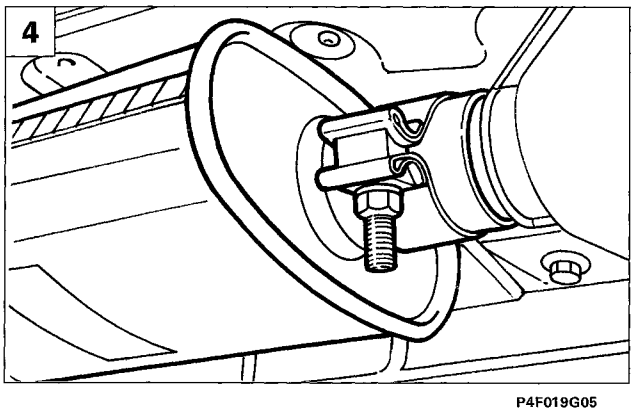

P4F019G05

Exhaust pipe

To remove the rear section of the exhaust pipe, proceed as follows:

1. remove the rear rubber mounting;
2. remove the central left rubber mounting;
3. remove the central right rubber mounting;
4. undo the bolt on the exhaust pipe clamp and remove the rear section of the exhaust pipe.

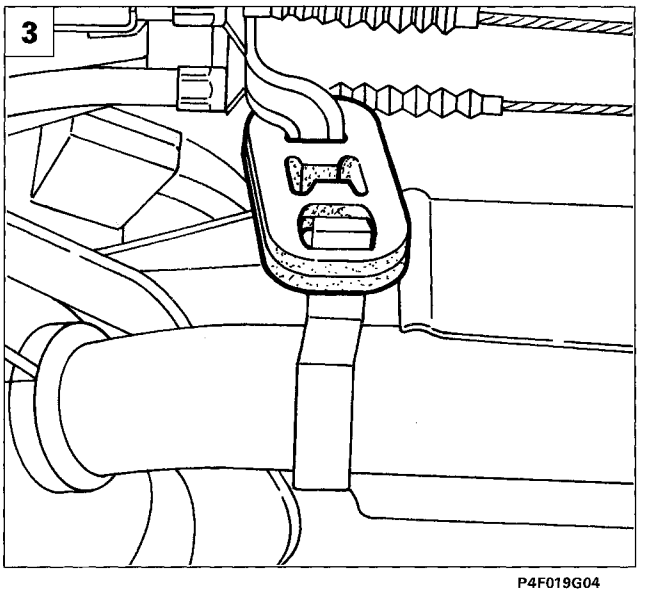

P4F019G04

44.

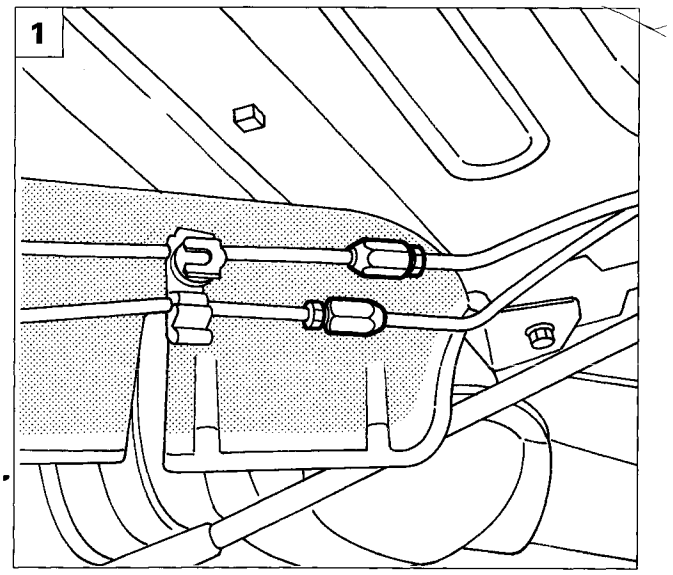

P4F020G01

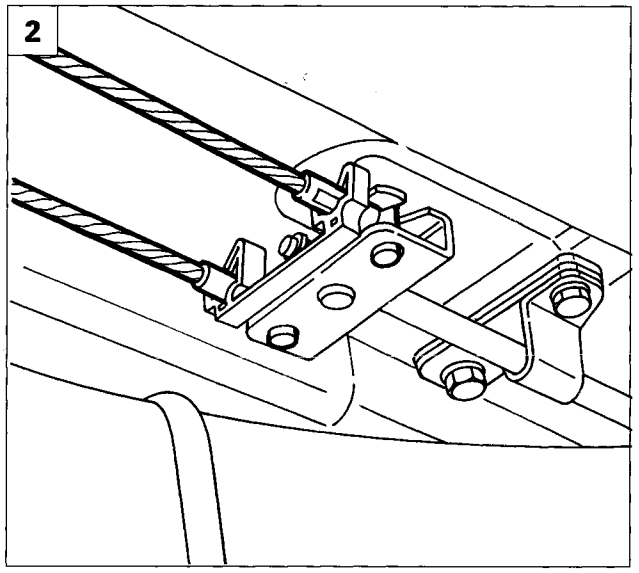

P4F020G02

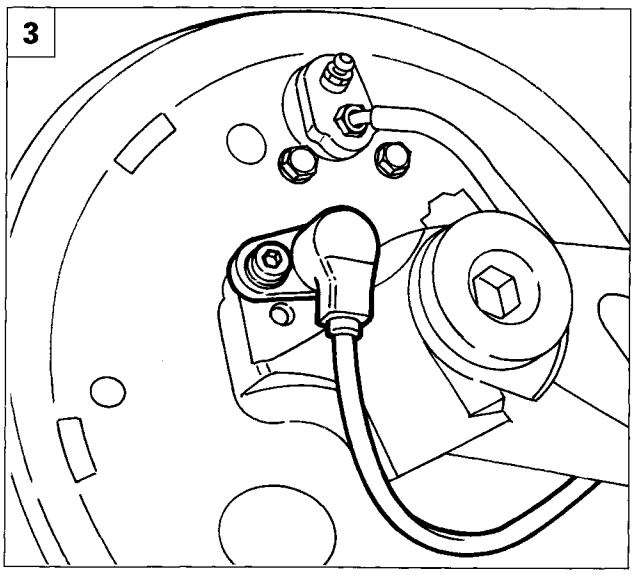

P4F020G03

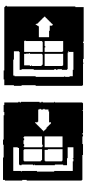

Suspension assembly

To remove the rear suspension assembly, proceed as follows:

1. disconnect the brake pipe connections;
2. slacken the handbrake cable and disconnect the wires;
3. undo the bolt and move the ABS sensor over;

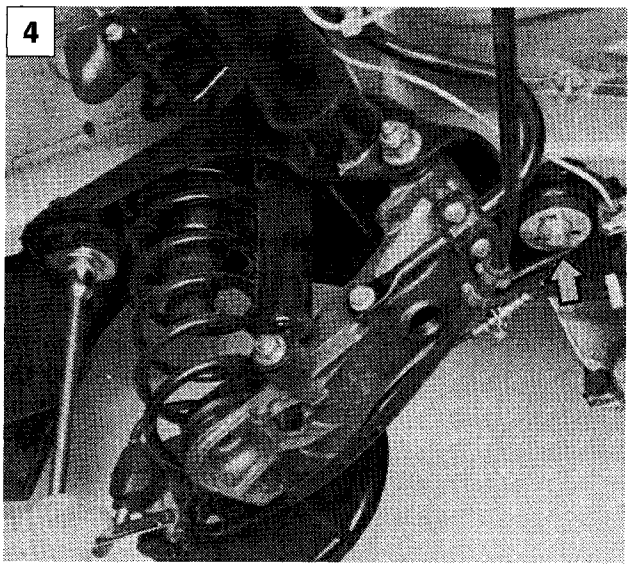

P4F020G04

4. place the hydraulic column jack under the suspension cross member and undo the bolts securing the suspension to the body shell; lower the jack and remove the rear suspension assembly.

DISMANTLING-REASSEMBLY

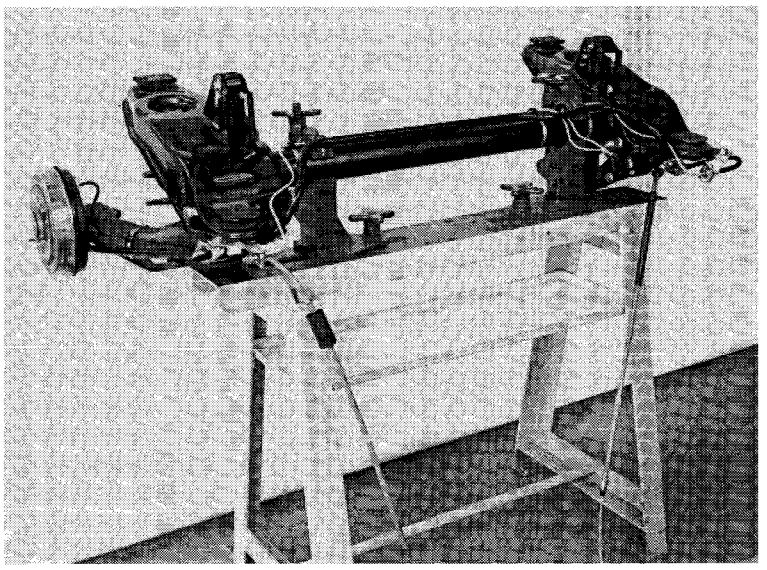

P4F021G01

Rear suspension on overhaul stand

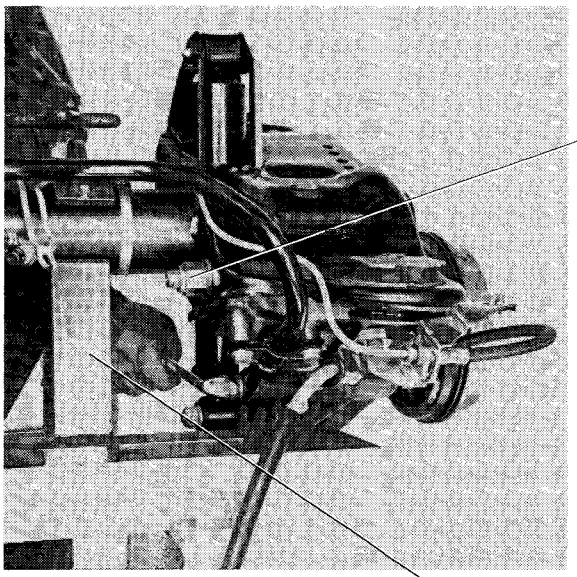

P4F021G03

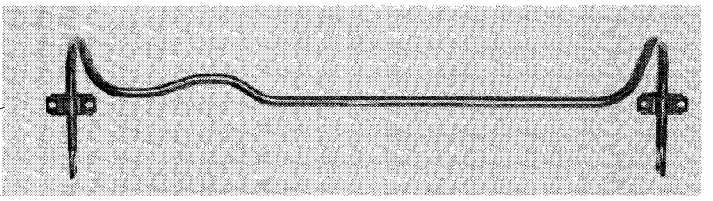

P4F021G02

Dismantling stabilizer bar from attachments on trailing arm

Stabilizer bar

Check that the stabilizer bar is not worn or deformed, otherwise it will have to be replaced.
Check that the mountings are not worn.

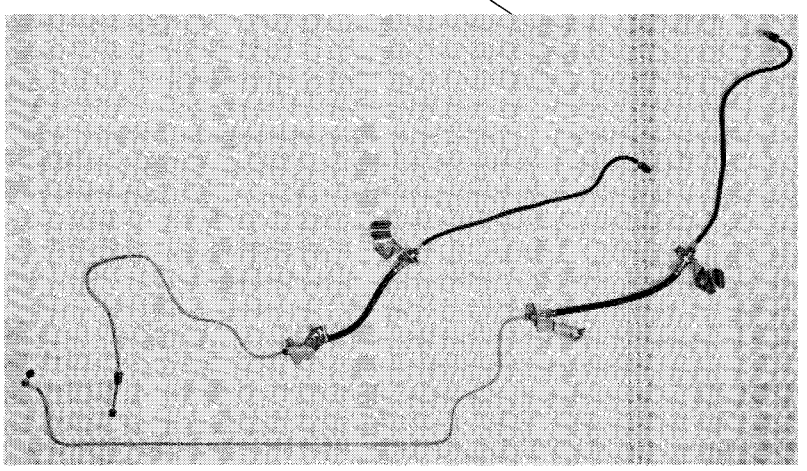

P4F021G04

Dismantling brake pipes from attachments on rigid rear axle

NOTE *Whenver the brake fluid pipes are disconnected, check them for blockages using compressed air.*
They must be replaced if they are dented, crimped, cracked or with worn unions.

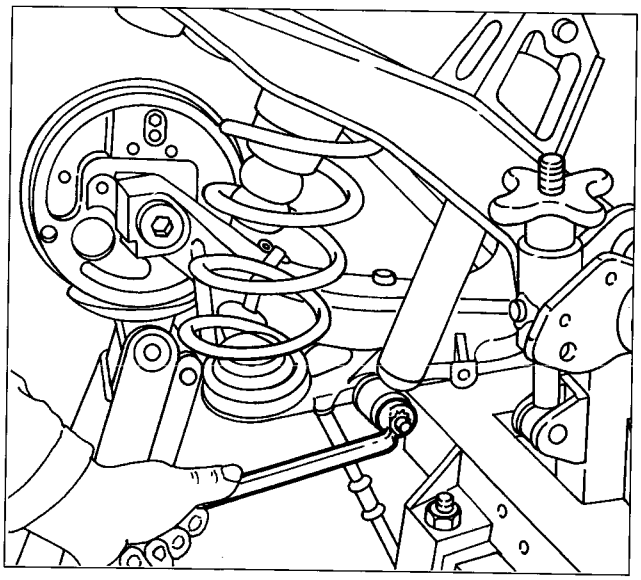

P4F022G01

Dismantling shock absorber from mounting on trailing arm

To remove the shock absorber, compress the rear suspension with a hydraulic jack.

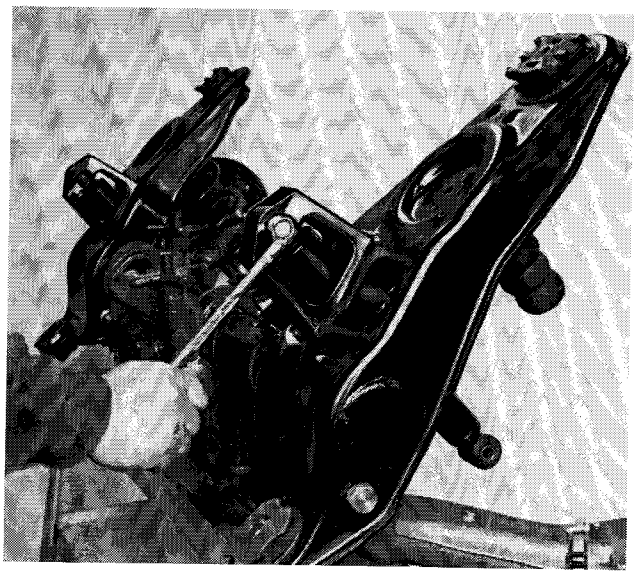

P4F022G02

Dismantling shock absorber from mounting on rigid rear beam

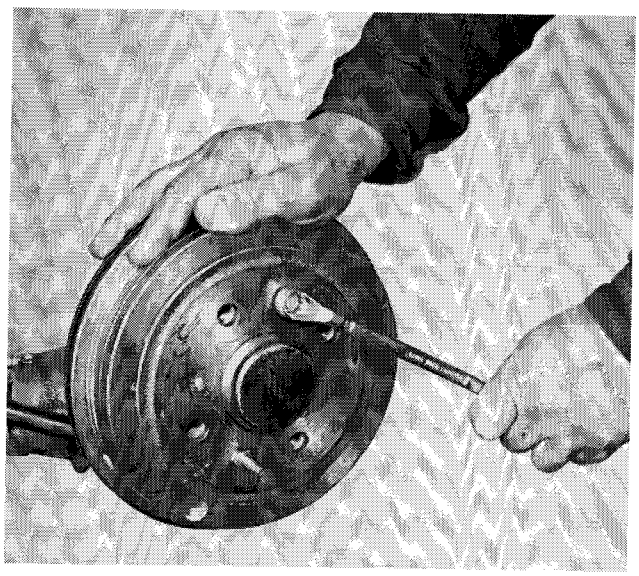

P4F022G03

Dismantling - refitting brake drum

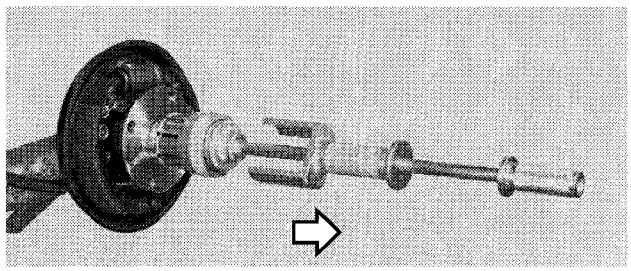

P4F023G01

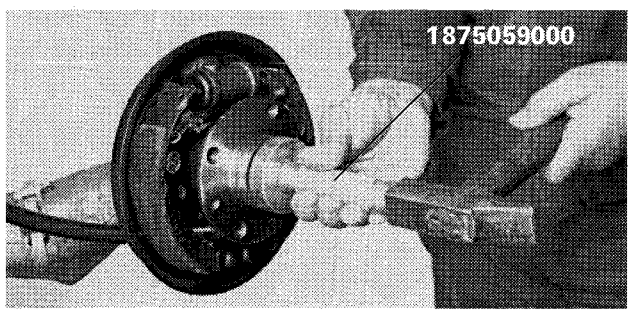

P4F023G02

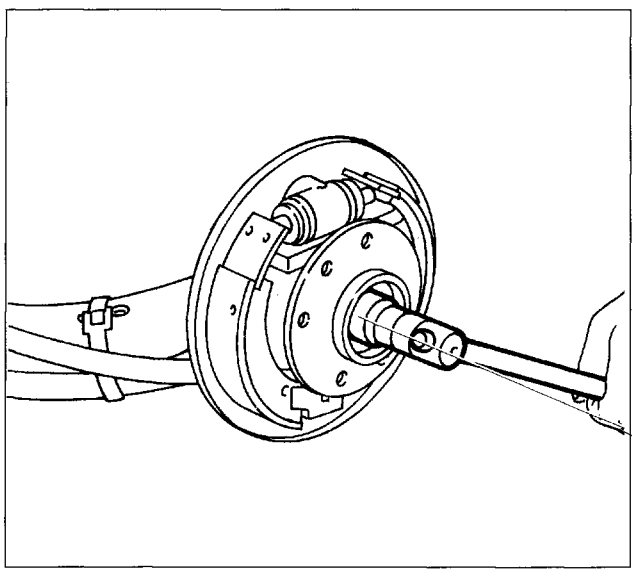

P4F023G03

Dismantling hub cap

Refitting hub cap

NOTE *Before assembly, smear TUTELA MR3 grease on the edge of the cap.*

STUB AXLE - REAR WHEEL HUB

Dismantling-reassembly of stub axle and wheel hub nut

Whenever the hub nut is removed, it must be replaced with a new one.

NOTE *The hub nut must be tightened to the correct torque with the rigid rear axle mounted on the car.*

Checking hub

If the wheel bearing (arrowed) is replaced because of excessive noise or play, the complete hub must also be replaced.

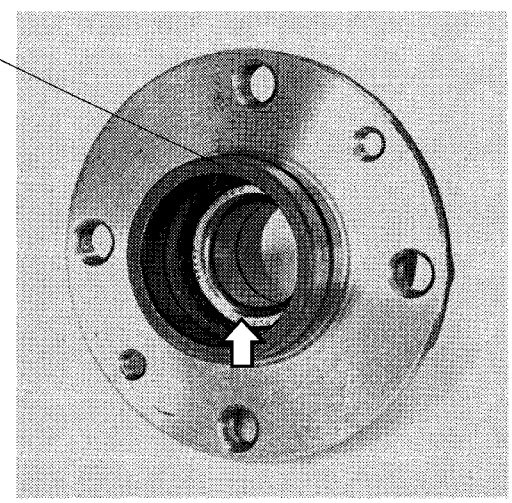

P4F023G04

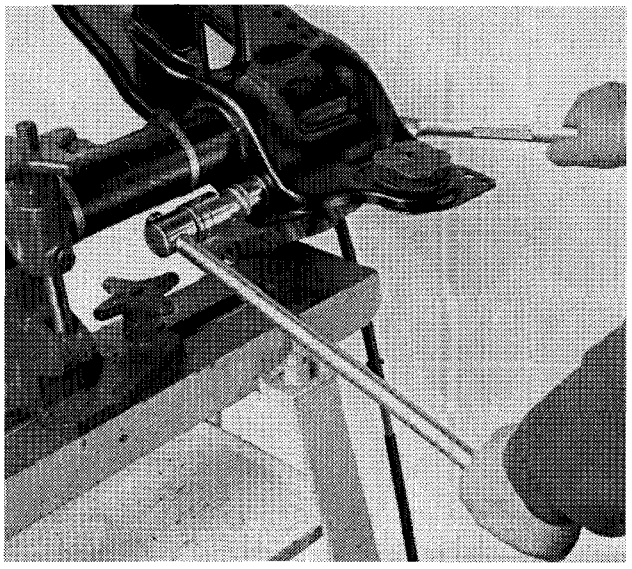

P4F024G01

Dismantling trailing arm from rigid rear axle

Do not attempt to dismantle the stub axle from the trailing arm, because it would not be possible to refit it with the necessary interference fit.

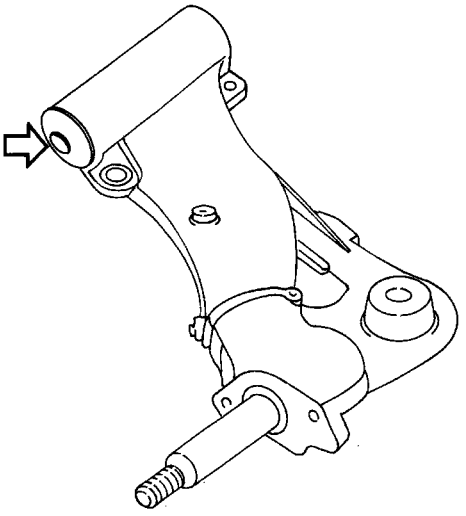

P4F024G02

Checking trailing arm and stub axle

Make sure that the trailing arm is not cracked, deformed or worn (on the surface on the wheel side), otherwise it will have to be replaced.
If the bearings and spacer (arrowed) need to be replaced because of excessive noise or play, the trailing arm will also have to be replaced.
The stub axle must not be cracked, deformed or worn, otherwise it will have to be replaced.

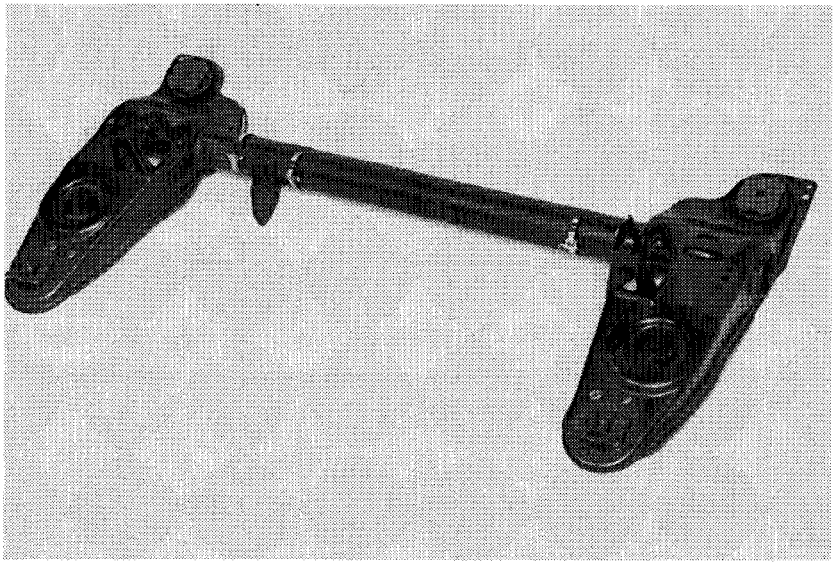

P4F024G03

Checking rigid rear beam

Make sure that the rear beam is not cracked or deformed or that the two side arms are out of alignment, otherwise it will have to be replaced.

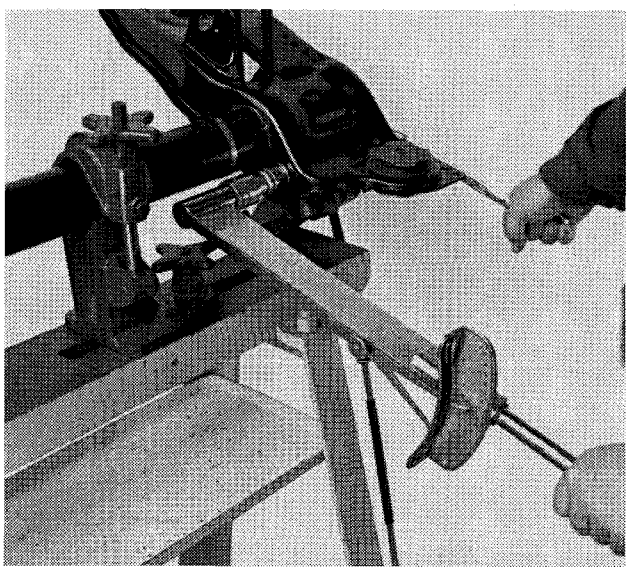

P4F025G01

15 daNm

Refitting trailing arm on rigid rear axle and tightening nut to correct torque

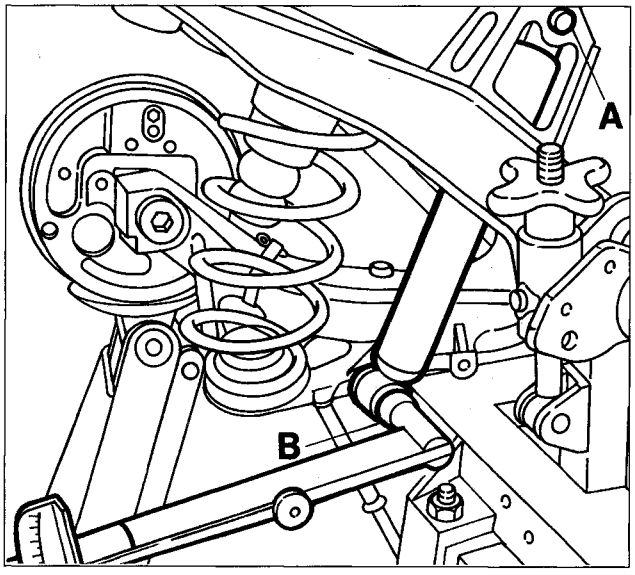

P4F025G02

A	6 daNm
B	8.8 daNm

Refitting damper

Tightening to torque the top bolt (A) and bottom bolt (B) securing the shock absorber to the rear suspension assembly.

To secure the shock absorber to the trailing arm, compress the suspension with a hydraulic jack.

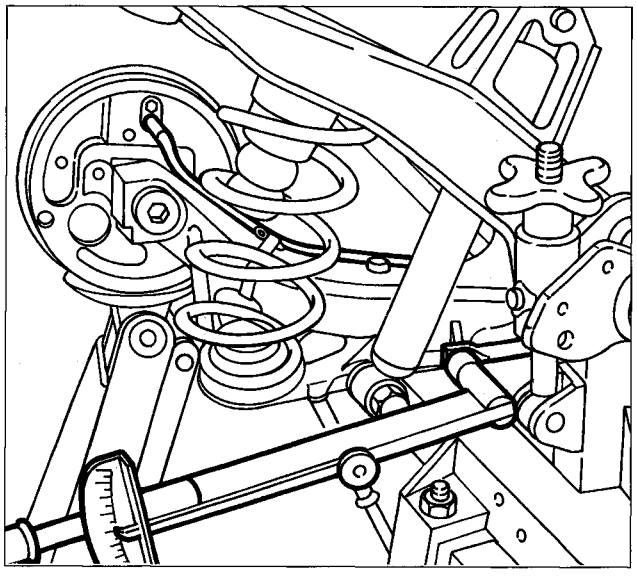

P4F025G03

5.6 daNm

Fitting brake fluid pipe and stabilizer bar to the rear suspension assembly

Tightening to torque the bolt securing the stabilizer bar to the trailing arm.

Copyright Fiat Auto

44.

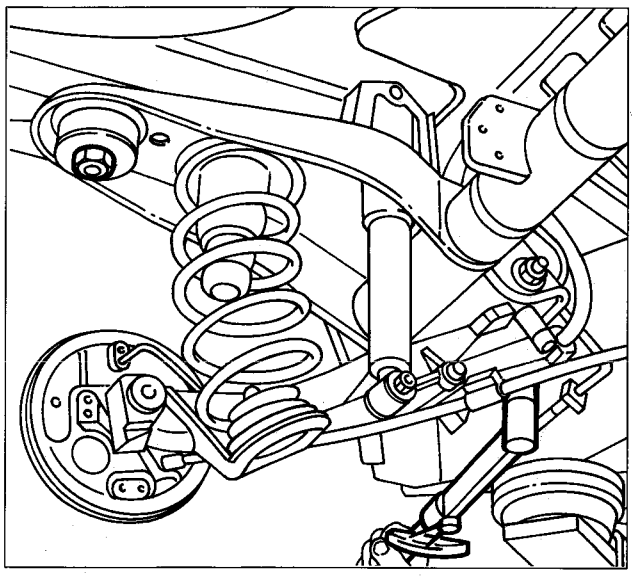

P4F026G01

10.8 daNm

Refitting rear suspension

Tightening bolts on bodywork to correct torque.

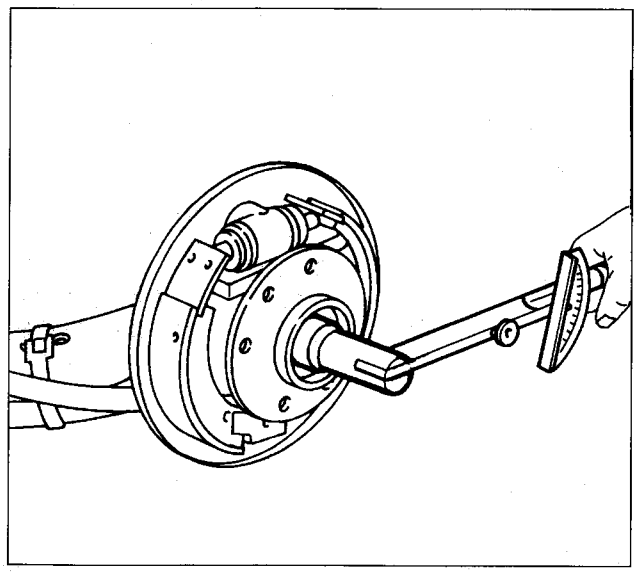

P4F026G02

28 daNm

Tightening stub axle and hub nut to correct torque.

Also:

Bleed brakes

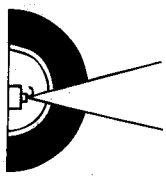

Check rear wheel geometry

COMPONENTS OF THE REAR SUSPENSION SUPPLIED AS SPARE PARTS

1. Rigid rear axle - 2. Hydraulic rubber buffer - 3. Shock absorber top bolt - 4. Coil spring - 5. Shock absorber - 6. Bottom bolt and nut securing shock absorber to trailing arm - 7. Cast iron trailing arm - 8. Stabilizer bar - 9. Nut and bolt securing trailing arm to rear axle - 10. Stub axle - 11. Wheel hub - 12. Stub axle and wheel hub nut -13. Hub cap - 14. Rubber buffer

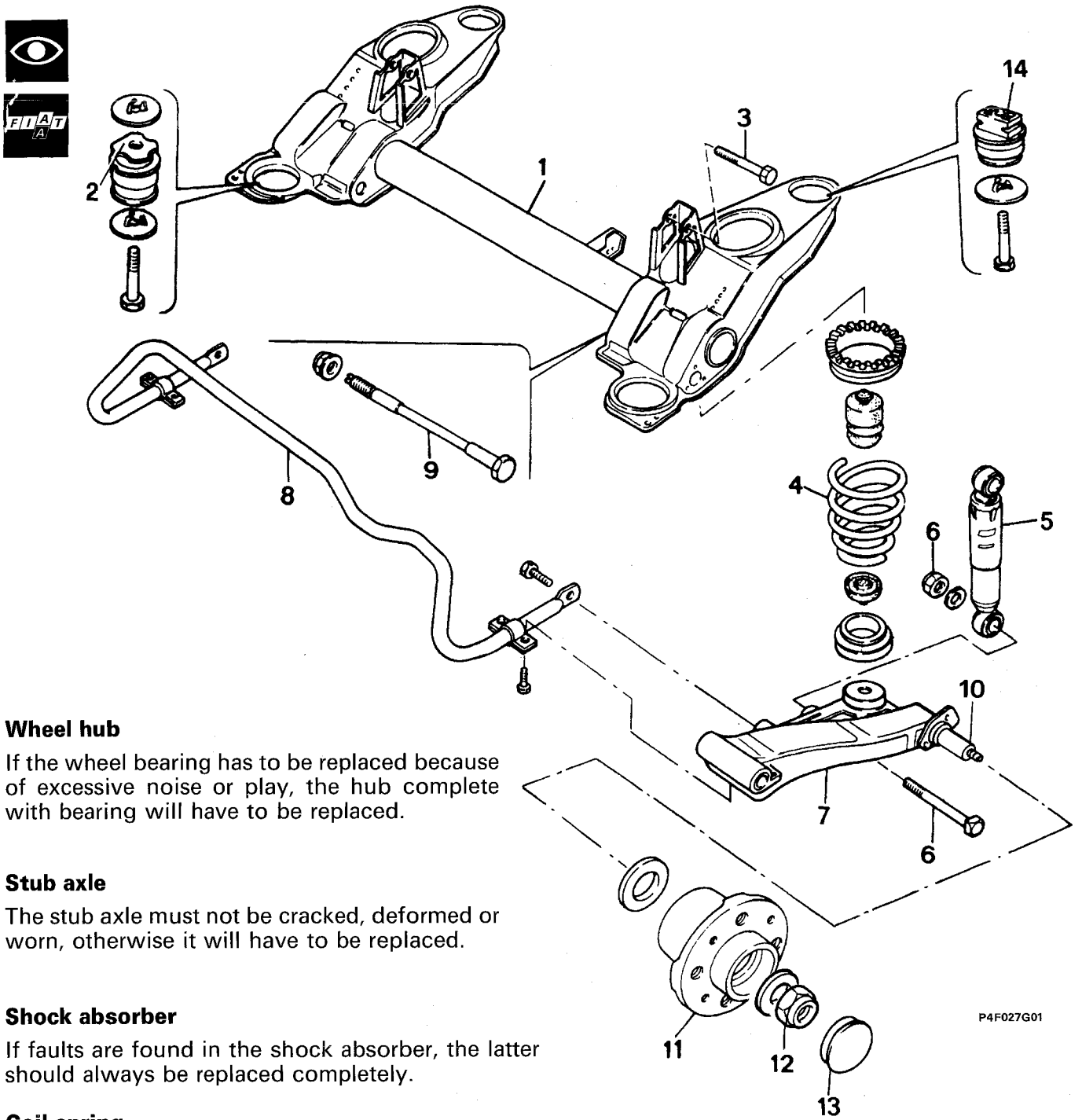

Wheel hub

If the wheel bearing has to be replaced because of excessive noise or play, the hub complete with bearing will have to be replaced.

Stub axle

The stub axle must not be cracked, deformed or worn, otherwise it will have to be replaced.

Shock absorber

If faults are found in the shock absorber, the latter should always be replaced completely.

Coil spring

Make sure that it is not cracked or deformed such as to impair its efficiency.

NOTE *The coil springs are distinguished into two categories identified by a yellow or green paint mark on the central coil. Springs of the same category must be fitted.*

Copyright Fiat Auto

FRONT WHEEL GEOMETRY

The wheel geometry must be checked after the components which affect the wheel geometry have been subjected to the following checks:
- tyre pressure;
- the eccentricity and out of true of the wheel rims must not exceed 3 mm;
- wheel bearing endfloat;
- play between vertical link and wishbone balljoint;
- play on tie rod end.

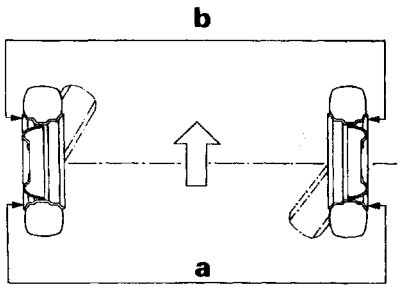

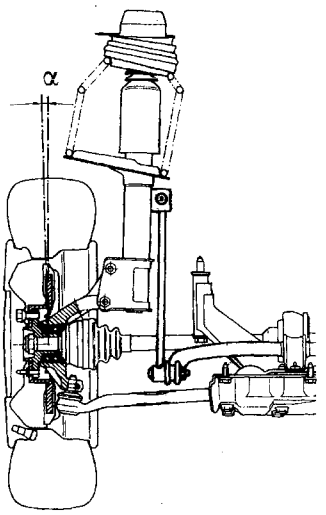

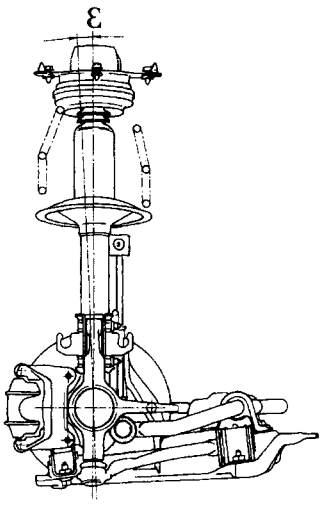

P4F028G01

TOE-IN

See data in Sec. 00

CAMBER (not adjustable)

CASTER (not adjustable)

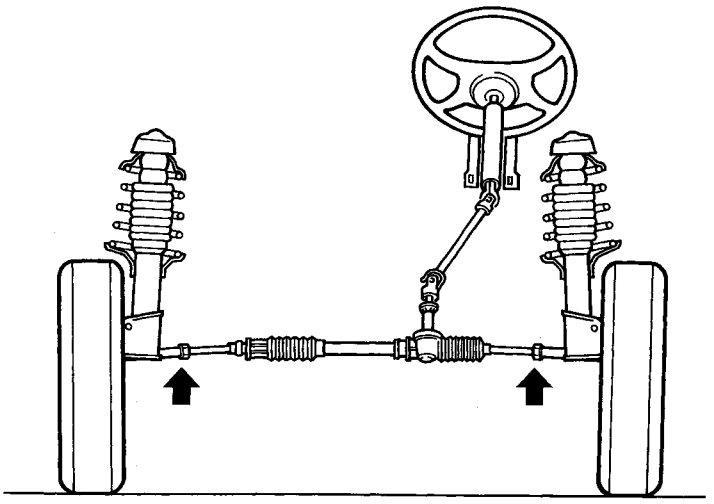

P4F028G02

If, when checking the toe-in, different values from those specified are measured, adjust the tie rods after slackening the nuts.

If the camber angle is different from the specified angle, the body shell will have to be checked.

Whenever checking the front wheel toe-in, closely follow the instructions below:
- *slacken the clips securing the gaiters on the tie rods;*
- *check that the gaiter turns freely on the tie rod; if necessary remove the gaiter and lubricate with MOLYGUARD SYL 133 silicone grease or a similar product;*
- *tighten the clip after adjusting the toe-in, and only after checking that the gaiter is in the correct position.*

REAR WHEEL GEOMETERY

The wheel geometry must be checked after the following checks have been carried out:
- tyre pressures;
- the eccentricity and out-of-true of the wheel rims must not exceed 3 mm;
- wheel bearing endfloat.

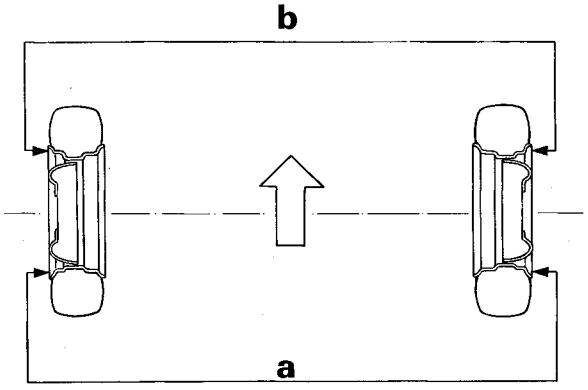

P4F029G01

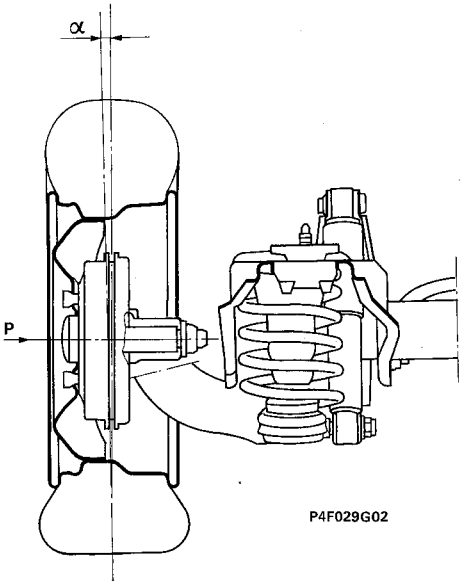

P4F029G02

TOE-IN (not adjustable)

See data in Sec. 00

CAMBER (not adjustable)

If the rear wheel angles are incorrect, they cannot be adjusted as the rear suspension comprises a rigid axle.

This manual contains the main instructions concerning the repair and maintenance of the **Fiat Marea and Fiat Marea Weekend.**
The manual is divided into sections distinguished by two-digit numbers which correspond to the spare parts microfiches and the repair time schedule.
The **INTRODUCTION AND TECHNICAL DATA (00.)** Section has the dual function of presenting the model and supporting the rest of the manual. This Section comprises technical data tables and specific information relating to the other sections in the manual.

The remaining sections (10. - 18. ecc.) contain descriptions relating to the intervention procedures.

In this manual, graphic representations and symbols are used instead of descriptions of mechanical parts, operations or methods of intervention.

Example:

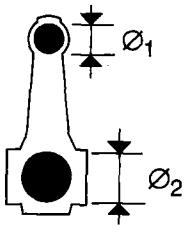

Con rod small end diameter

Big end bearing seat

Tighten to torque

ENGINES *Section 10 describes the operations for the removal and refitting of the engines, operations on the car and the fuel system, lubricating system and cooling system.*

The overhaul procedures for the individual engines are contained in sections with the following publication numbers:

Engine	Publication no.	Order no.
1370 12V	504.589/19	604.89.774
1581 16V	504.589/20	604.89.781
1747 16V	504.589/18	604.89.192
1998 20V	504.589/22	604.89.795
1910 TD	504.593/13	604.44.220
2387 TD	504.593/14	604.44.311

The first 4 sections are included in the Petrol Engine Overhaul Manual Volume 3, while the last four are included in the Diesel Engine Overhaul Manual Volum 2.

GEARBOXES *Section 21-27 describes the operations for the removal and refitting of the various gearboxes. The procedures for the bench overhaul of the variuus mechanical gearboxes are published in separate sections with the following publication numbers:*

505.023/08 Included in the Gearbox Overhaul Manual
505.023/03 Included in the Gearbox Overhaul Manual
505.023/18 Included in the Gearbox Overhaul Manual 2nd volume

THIS PUBLICATION IS LOOSE-LEAF SO THAT MODEL UPDATES CAN BE ADDED.

When using chemical products, closely follow the accident prevention instructions on the safety leaflet which the supplier must give to the user (in Italy in accordance with D.M. no. 46/1992)

Copyright Fiat Auto

The **Fiat Marea** is a 5-door saloon with monocoque body, transverse-mounted engine and front-wheel drive.

It is made with different engines.

The engines are with 4 or 5 cylinders in line, clockwise rotation, and positioned transversally at the front.

The following engines are fitted, depending on the version:

1370 cm³ four cylinders in line, 12 valves, running on unleaded petrol and delivering a power of 59 kW (80 bhp) at 6000 rpm.

1581 cm³ four cylinders in line, 16 valves, running on unleaded petrol and delivering a power of 76 kW (103 bhp) at 5700 rpm.

1747 cm³ four cylinders in line, 16 valves, running on unleaded petrol and delivering a power of 83 kW (113 bhp) at 5800 rpm.

1998 cm³ five cylinders in line, 20 valves, running on unleaded petrol and delivering a power of 108 kW (147 bhp) at 6100 rpm.

1910 TD cm³ four cylinders in line, 8 indirect injection valves, running on diesel and delivering a power of 55 kW (75 bhp) at 4200 rpm.

1910 TD cm³ four cylinders in line, 8 indirect injection valves, running on diesel and delivering a power of 74 kW (100 bhp) at 4200 rpm.

2387 TD cm³ five cylinders in line, 20 indirect injection valves, running on diesel and delivering a power of 91 kW (124 bhp) at 4000 rpm.

The **Fiat Marea Weekend** is a 5-door estate with monocoque body, tranverse-mounted engine and front-wheel drive.

It is produced with 7 different engines.

The engines are the same as those fitted to the **Fiat Marea**.

	Remove Disconnect
	Refit Connect
	Dismantling Disassembly
	Fitting Reassembly
	Tighten to torque
	Tighten to torque plus angle
	Fully tighten
	Stake nut
	Adjustment Regulation
	Visual check Check
	Warning
	Lubricate Damp
	Replacement Original parts
	Bleed the braking system
	Surface to be machined After machining
	Interference Force fit
	Dimension to be measured Measurement – Check Thickness – Clearance
	Rolling torque

	Inlet
	Exhaust
	Operation
	Tolerance Weight difference
	Preload
	Rotation
	Compression ratio
	Selection Classes
> Oversized O'sized to .... Maximum	< Undersized U'sized to .... Idling
	Rpm
	Ratio
	Pressure
	Temperature
	Temperature <0°C Cold Winter
	Temperature >0°C Hot Summer
	Windscreen wiper with pump washer fluid
	Rear window wiper with pump washer fluid
	Engine

Copyright Fiat Auto

This manual describes the maintenance operations and normal working procedures carried out in the workshop.
It contains the specific **WARNINGS** AND **SAFETY INSTRUCTIONS** to be carried out to ensure the safety of the vehicle and that its safety characteristics are maintained, and especially to ensure that operators work safety with no personal risks.

The warnings given are the most important and significant. However, they cannot cover all the risks associated with the operating methods with which repair interventions can be carried out and the relevant possible consequences.

Any person wishing to carry out maintenance procedures and using tools recommended by Fiat Auto must nevertheless make sure that the safety of persons and the vehicle is not put in jeopardy.

IN EACH COUNTRY, HOWEVER, IT IS NECESSARY TO OBSERVE THE CURRENT SAFETY INSTRUCTIONS CONCERNING WORKSHOPS.
ALWAYS REFER TO THE SPECIAL SIGNS DISPLAYED IN THE WORKSHOP.

The words **WARNING** and **ATTENTION** indicate the procedures to be followed with particular care to prevent accidents to staff or damage to the car's components:

WARNING: used when insufficient care could cause damage to persons.

ATTENTION: used when insufficient care could cause damage to the vehicle or parts of it.

GENERAL WARNINGS

All the operations must be carried out with the maximum attention and care to avoid damage to the vehicle and persons.

- The use of special tools is indicated for some procedures. These tools are essential for working safely and to avoid causing damage to the parts involved in the procedure.

- If necessary, mark all electrical wires and pipes to avoid reconnection errors.

↙ To detach parts which are stuck to each other, use an aluminium or lead hammer for ferrous materials, and a wooden or resin hammer for light alloy parts.

- Protect adequately with adhesive tape or rags all parts of the engine which, left uncovered after dismantling, present entry passages for dust or foreign bodies.

Copyright Fiat Auto

- During refitting, lubricate the parts, where necessary, to prevent seizure or stiffness during the initial operating period.
- When refitting, it is essential to observe the tightening torques and any other adjustment data.
- When refitting, it is essential to reposition correctly and carefully wiring, piping and heat shields.
- During reassembly, replace seals, oil sealing rings, spring washers, safety plates, self-locking nuts and all parts that may be damaged.

- Assemblies or parts which are removed must be replaced using only **ORIGINAL SPARE PARTS**: only in this way can the interchangeability and perfect operation of the various components be ensured.

Safety supports

- If it is necessary **to raise the vehicle**, use a suitable hydraulic jack which meets current requirements, and position the specific safety supports on the support points indicated in this manual.
- Ensure that the car CANNOT IN ANY way slide off the supports and fall while you are working. Make sure that the jacks and safety supports have been fitted correctly.
- Apply the handbrake and lock the rear wheels to prevent the car sliding off the safety supports.
- If necessary **remove the engine**, gearbox and other heavy units, and check that the lifting hooks have been fitted correctly. Do not go under raised components.

Protection of fittings

- Remove or cover the interior fittings of the car (upholstery, instruments, carpets).
- Cover glass, instruments, upholstery and carpets with heat-resistant materials before undertaking welding operations.

Protection of external components

- When external components are removed (bonnet, boot, mouldings, trim pieces), the surfaces of the bodywork must be protected to prevent scoring, using appropriate equipment or cloths, protective tape or other materials.

PROTECTING THE ENVIRONMENT

- NEVER discharge the liquids contained in the vehicle (engine oil, gearbox oil, brake fluid, etc.) in the sewerage network or other environments, but comply with current regulations concerning correct disposal.
- DO NOT discharge refrigerant from the air conditioning system into the open air, as it could be dangerous to the environment. Use only the special equipment to drain the system.
- Do not burn used products (e.g. tyres, plastic parts, etc.).
- Do not abandon batteries or other components containing chemicals in the environment; instead scrap them correctly.

Chemicals: regarding the use of chemicals, closely follow the legislation in each country.

OPERATIONS IN THE ENGINE COMPARTMENT

The engine compartment contains several moving parts, parts at high temperature and high-voltage cables which could be dangerous.

The instructions below should be followed closely:

- **Do not touch hot surfaces**
- **Do not smoke and/or use naked flames**
- **Do not work on moving components**
- **Do not wear scarves, ties or rings while working**

Engine oil

- Do not dispose of oil in the sewereage network or other environments, but conform to current regulations concerning correct disposal of waste oil.
- Engine oil is harmful to skin: reduce the contact of oil with the skin to a minimum; in the case of contact wash with soap and water.

Coolant

- When the engine is hot, the fluid in the cooling system is under pressure. To avoid leaks of boiling coolant, do not open the cap until the engine is cold.
- When pouring coolant, take care not to pour it on electrical or painted parts. If coolant is spilled, clean it off immediately.

Copyright Fiat Auto

Brake fluid

- Avoid leakage of brake fluid on painted surfaces, as the paint could be damaged; if the fluid is accidntally spilled onto paint, remove immediately with water.

- Cover pipe connections to prevent leakage of fluids.

- Before proceeding with refitting, make sure that dust and other impurities have been cleaned off all the parts.

SAFETY SYSTEM WITH AIR BAG AND/OR PRETENSIONERS

Some versions are fitted with a safety system comprising an AIR BAG cushion located on the steering wheel and another on the passenger's side of the dashboard.
In addition, there may be seat belt pretensioners on the front seats.

WARNING

These devices contain a PYROTECHNIC CHARGE:
there are therefore particular provisions concerning their correct handling; these instructions are described in detail in this manual: see "Section 55 - Electrical system".

- The maintenance, dismantling or replacement of these components requires particular care and the use of specific methods and equipment, requiring the exclusive intervention of specially trained staff.

- Particular attention should also be given to operations on compnents located NEAR the above-mentioned devices.

BODYWORK

Protective clothing
Make sure that the following are used, depending on the operations to be carried out:

1. *Work cap*
2. *Ear defenders*
3. *Welding gloves*
4. *Gloves*
5. *Protective shoes*
6. *Protective visor*
7. *Boiler suit*
8. *Dust mask*
9. *Protective goggles*

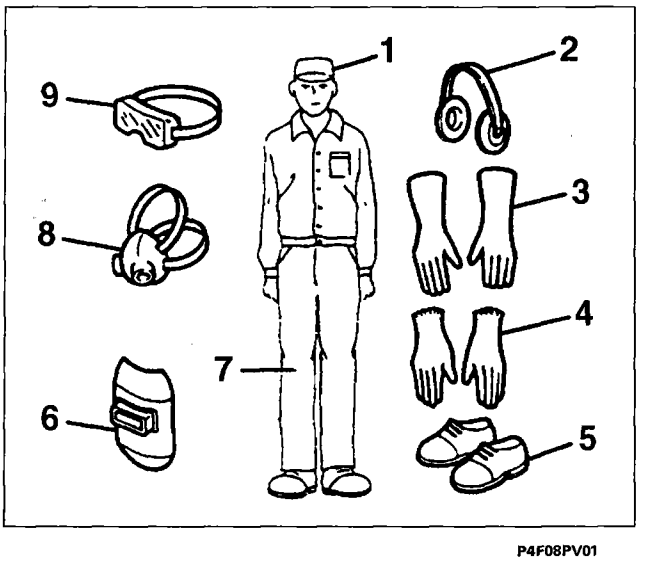

P4F08PV01

When welding

- Make sure to disconnect the battery before starting any repair work.
- If welding has to be carried out near the fuel tank, the fuel vapour separator or the fuel vapour filter, remove the latter from their seatings.
- Plug open pipe connections for fuel, fuel vapours and brake fluid pipes when the connections are disconnected.
- Remove electronic control units before carrying out electric-arc welding on the vehicle.

Working environment

- The environment must be well ventilated and lit, to ensure the safety of operators.
- As paints and sealants, if heated, can emit toxic gases, use a saw or pneumatic chisel in preference to an oxyacetylene torch for cutting and removing damaged metal panels.
- To remove paint from the metal panels, use a band sander or rotary brush.
- Use an appropriate extractor hood to contain dust.

Flammable materials

- Before using these materials, make sure that you have disconnected the battery.

Vehicle body straightener

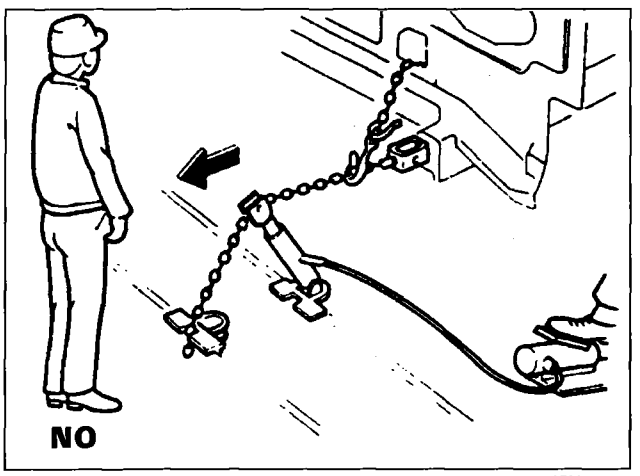

P4F09PV01

- Make sure that the straightener is used correctly in accordance with the equipment Manufacturer's Instructions Manual.
- During straightening of the damaged body shell, never stand in front of the straightener in the direction of exerting the traction force.

AIR CONDITIONER

- The coolant which accidentally leaks out of the air conditioning system or the emptying/filling device may become toxic if it is very close to naked flames or in the presence of certain metals (for example magnesium or aluminium) in the form of fine particles or powder. **It is therefore appropriate to work in the absence of naked flames and in ventilated environments with the extraction system switched on.**
- Avoid prolonged contact with the skin of fluid at the evaporation stage as the low temperature (approx. -25° C) can cause "scalding" because of excessive cold. **It is therefore appropriate to use leather or thick fabric gloves.**

- It is also essential to protect the eyes from contact with fluid at low temperature. **Always wear protective goggles.**

- Discharging fluid in the open air constitutes a danger to the environment.

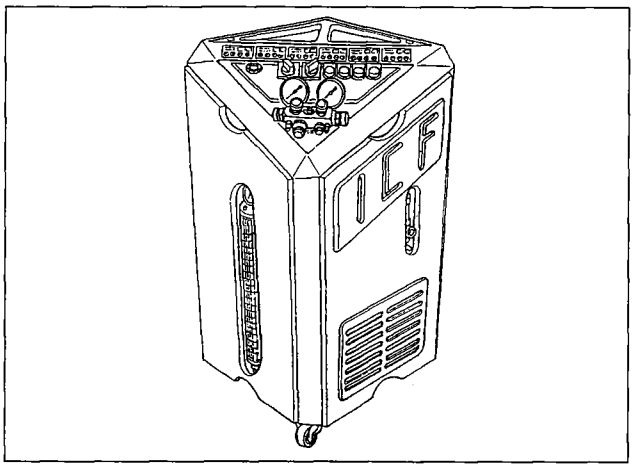

P4F10PV01

To empty the system, only use the equipment indicated in the manual.

- The fluid is stored under pressure in metal cylinders; never expose the cylinders to sun rays for prolonged periods: the increase in temperature increases the pressure, which could exceed the safety limit. Never leave the charging station cylinder completely full for prolonged periods. Never overturn the cylinder during pouring.

ELECTRICAL SYSTEM

Before undertaking any activity to electrical components, adopt and closely follow the precautions below:

- Remove rings, wrist watches and other metal objects.
- Disconnect the battery whenever wiring has to be removed or when delicate operations have to be carried out on the electrical system.
- Do not fast charge the battery, except after disconnecting the earth cable, so as not to damage the alternator diodes.
- Never try to turn the engine with the battery's earth cable loose, in order not to cause serious damage to the wiring.
- When working on the car's electrical system, never pull wires or wiring using force, as the wires could be inadvertently disconnected from the connectors or terminals.
- Disconnect all the control units and electronic devices when carrying out arc welding on the body shell.
- When replacing fuses, make sure that the new fuse is of the correct rating. Do not use fuses of a higher or lower rating.

BE CAREFUL: ELECTRIC ARCS:	even though the voltage of the electrical system is only 12V, the battery can cause high currents in the case of short circuits, causing arcs or sparks which can cause danger to the operator or start a fire.
BE CAREFUL: HIGH VOLTAGES:	the electronic ignition system generatores voltages of 20,000 V and above, which could be very dangerous to persons. Work very cautiously on or near such components.
BE CAREFUL: FIRES:	do not smoke when working near the battery or components which heat up during use (e.g. halogen bulbs), or inside the engine compartment when the engine is still hot. ALSO take the utmost care to avoid burns or damage to tools or components.

Copyright Fiat Auto

SYMBOLS

PLATES are fitted to some components of the vehicle with appropriate symbols for drawing the operators' attention to certain precautions or behaviour which is recommended or even required mandatorily.

The following table gives these plates with the component concerned and the meaning of the symbol:

DANGERS:

SYMBOL	COMPONENT	MEANING
P4F12PV01	Battery	Corrosive liquid
P4F12PV02	Battery	Protect your eyes
P4F12PV03	Battery	Explosion
P4F12PV04	Electric fan	Can also start with the engine off
P4F12PV05	Coolant reservoir	Do not remove cap when engine is hot
P4F12PV06	Ignition coil	High voltage
P4F12PV07	Belts and pulleys	Moving parts: do not approach
P4F12PV08	Air conditioner pipe	Gas under pressure: do not disconnect

NOT PERMITTED:

SYMBOL	COMPONENT	MEANING
P4F13PV01	Battery	DO NOT expose to naked flames
P4F13PV02	Heat shields Belts - Pulleys Electric fans	DO NOT bring the hands close
P4F13PV03	Jack (supplied with car)	DO NOT use for repairs

WARNINGS:

SYMBOL	COMPONENT	MEANING
P4F13PV04	Engine oil	Use only specified oil
P4F13PV05	Power steering	DO NOT exceed the maximum level in the reservoir Use only the specified fluid
P4F13PV06	Brake fluid	DO NOT exceed the maximum level in the reservoir Use only the specified fluid
P4F13PV07	Catalytic converter	Do not park the vehicle or do not place the catalytic converter on flammable surfaces
P4F13PV08	Windscreen wiper	DO NOT exceed the maximum level in the reservoir Use only the specified fluid

Copyright Fiat Auto

4F02SV

SERVICE MANUAL COMPOSITION

At present, April 1998, the **Marea-Marea Weekend 2nd volume manual** is composed of the sections listed below:

Print N°	Sections	Page Nos.	Comments
506.763/01 With binder (VI/1996)	**50**	1 ÷ 74	Heater - Air conditioning
	55	1 ÷ 183	Electrical equipment
		1 ÷ 141	Wiring diagrams - Connector blocks
		1 ÷ 59	Electrical equipment fault diagnosis
	70	1 ÷ 113	Bodywork - Introduction - Replacing body panels
		1 ÷ 88	Bodywork - Removing-refitting
506.763/02 (VIII/1996)	**50**	1	Auxiliary units
	55	34	Electrical equipment
		34	Wiring diagrams
		51	Connector blocks
	70	6	Replacing body panels
		8	Pre-tensioners
506.763/03 (I/1997)	**55**	6	TAXI version
		4	Wiring diagrams
506.763/05 (IV/1997)	**50**	2	Climate control
	55	6	Services control unit
		14	Alarm
		2	Wiring diagram
	70	4	Bodywork - Front door
	10	3	Marengo - Technical data
	70	8	Marengo - Bodywork
506.763/06 (IX/1997)	**00**	14	Marea bipower technical data
	10	71	Marea bipower fuel system

Cont' ☞

Copyright by Fiat Auto

4F05SV

Print N°	Sections	Page Nos.	Comments
506.763/07 (IX/1997)	50	2	Climate control
	55	18	Radio - Alarm - Lighting
	55	2	Wiring diagrams
	70	4	Bodywork - seats
	10	4	Marea bipower
506.763/08 (IV/1998)	55	119 ÷ 132	Update: Alarm
		133 ÷ 136 139 ÷ 144 147 ÷ 150	Update: Air Bag and pre-tensioners
	55	1 ÷ 2	Marengo - Wiring diagram

4F02SV

WORKSHOP MANUAL COMPOSITION

To date, June 1996, the **Marea-Marea Weekend Volume 2** manual comprises the following sections:

Publication no.	Sections	Number of pages	Notes
506.763/01 With binder (VI/1996)	**50**	1 - 74	Heater - Air conditioner
	55	1 - 183	Electrical system
		1 - 141	Wiring diagrams - Connector blocks
		1 - 59	Electrical equipment diagnosis
	70	1 - 113	Bodywork - Introduction - Replacing body panels
		1 - 88	Bodywork - Removing/refitting

Copyright Fiat Auto

page

HEATING/VENTILATION

- Foreword 1
- Thermostatically-controlled air conditioner/heater 1
- Operating system 2
- Controls 3
- Connection to motor control ECU 4
- System components 6
- Automatic diagnosis 11
- Shroud/distributor unit 13
- Thermostatically-controlled air conditioner/heater wiring diagram 16
- Heater with manual controls 18

COMPRESSOR

- Compressor 21
- Operation 22

THERMOSTATICALLY-CONTROLLED AIR CONDITIONER

- Air conditioning system 29
- Draining and recharging the system 30
- Connecting the system to the Cleaner 1·34 device 31
- Topping up compressor fluid level 32
- Washing the system 34
- Service operations 34
- Compressor 35
- Condenser 37
- Removing-refitting dehydrating filter 40
- Lines connecting heating/ventilation system components 41
- Three-stage pressure switch 44
- Shroud/distributor unit 45
- Heater radiator 54
- Passenger compartment ventilation fan 55
- Interior ventilation fan electronic speed regulator 55
- Electronic control unit 55
- Variable flow compressor specifications 56
- Air conditioning system specifications 56
- Setting radiator and condenser thermal activation switch 56
- Specifications of extra resistor with fuse for radiator and condenser fans 56

page

- Setting pressures for three-stage pressure switch 57
- Checking system performance 58
- Equipment used for handling coolant "R134" in vehicle air conditioning system 60
- Table showing tap and selector position for each individual operation 61
- Recovering and recycling heating/ventilation system coolant 61
- Draining and drying the vehicle air conditioning system 62
- Charging the air conditioning system 63
- Transferring coolant from device dispensing cylinder to a container (canister) 63
- Transferring coolant from canister to equipment dispensing cylinder 63
- Checking pressures in vehicle system 63
- Moisture indicator and filter replacement 64

HEATER WITH MANUAL CONTROLS

- Distributor heater assembly 65
- Control support assembly 73

Copyright Fiat Auto

FOREWORD

The air in the vehicle passenger compartment may be treated by means of one of the following systems:
- THERMOSTATICALLY-CONTROLLED AIR CONDITIONER
- THERMOSTATICALLY-CONTROLLED HEATER
- HEATER WITH MANUAL CONTROLS

The first two systems are described jointly, because the heater differs from the air conditioner only in lacking an air cooling circuit: the entire system is controlled by the same electronic control unit. The control unit recognises the presence or absence of a cooling circuit by detecting the existence of the air conditioner activation key on the control panel in the air conditioned version

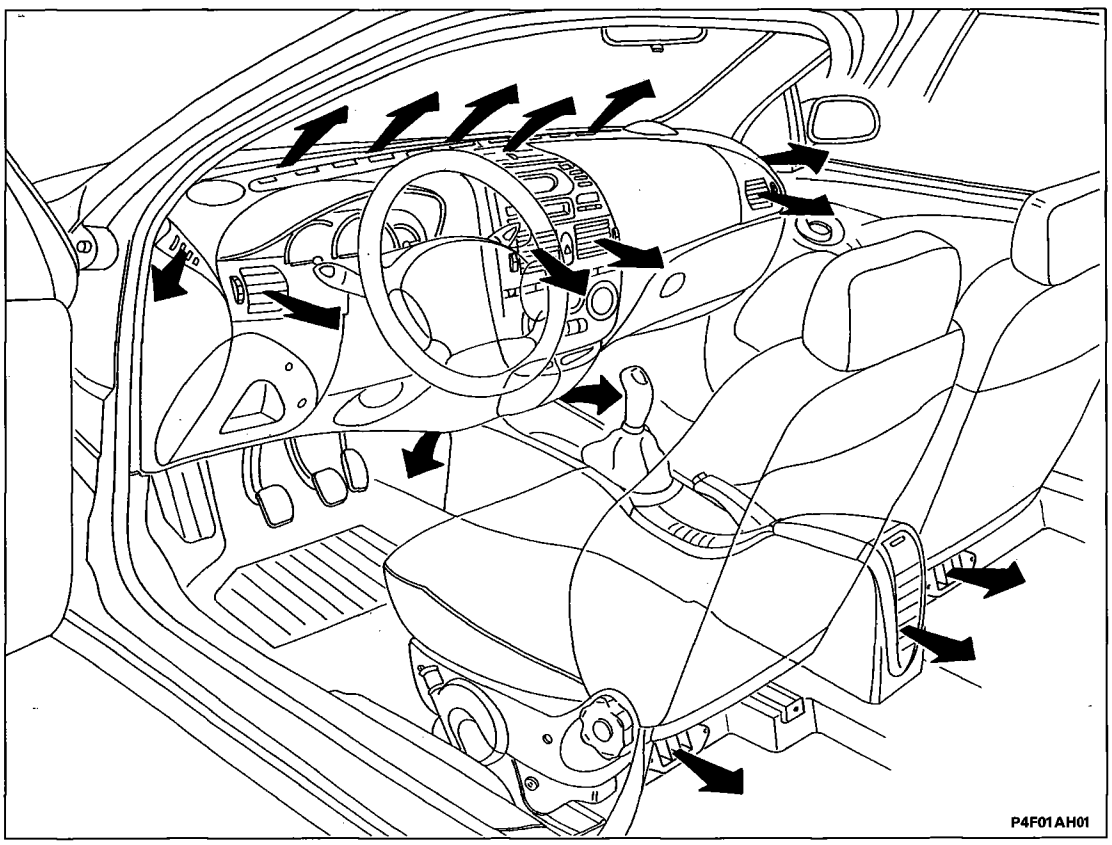

THERMOSTATICALLY CONTROLLED AIR CONDITIONER / HEATER

The thermostatically-controlled system controls the vehicle air conditioning system SEMI-AUTOMATICALLY:
The following are controlled automatically on the basis of the passenger compartment temperature requirement:
- air temperature to outlets
- fan speed (continuous variation);

The following are controlled manually:

- fixed fan speed (4 speed)
- compressor activation (air cooling circuit)
- air recirculation activation
- "MAX DEF" function"

Air distribution to the various ventilation outlets is controlled fully automatically (via bowden cables).

Copyright Fiat Auto

SYSTEM OPERATION

A special electronic control unit manages automatic system operation by controlling thermodynamic parameters in order to ensure the climatic conditions (temperature and humidity) requested by the car occupants.

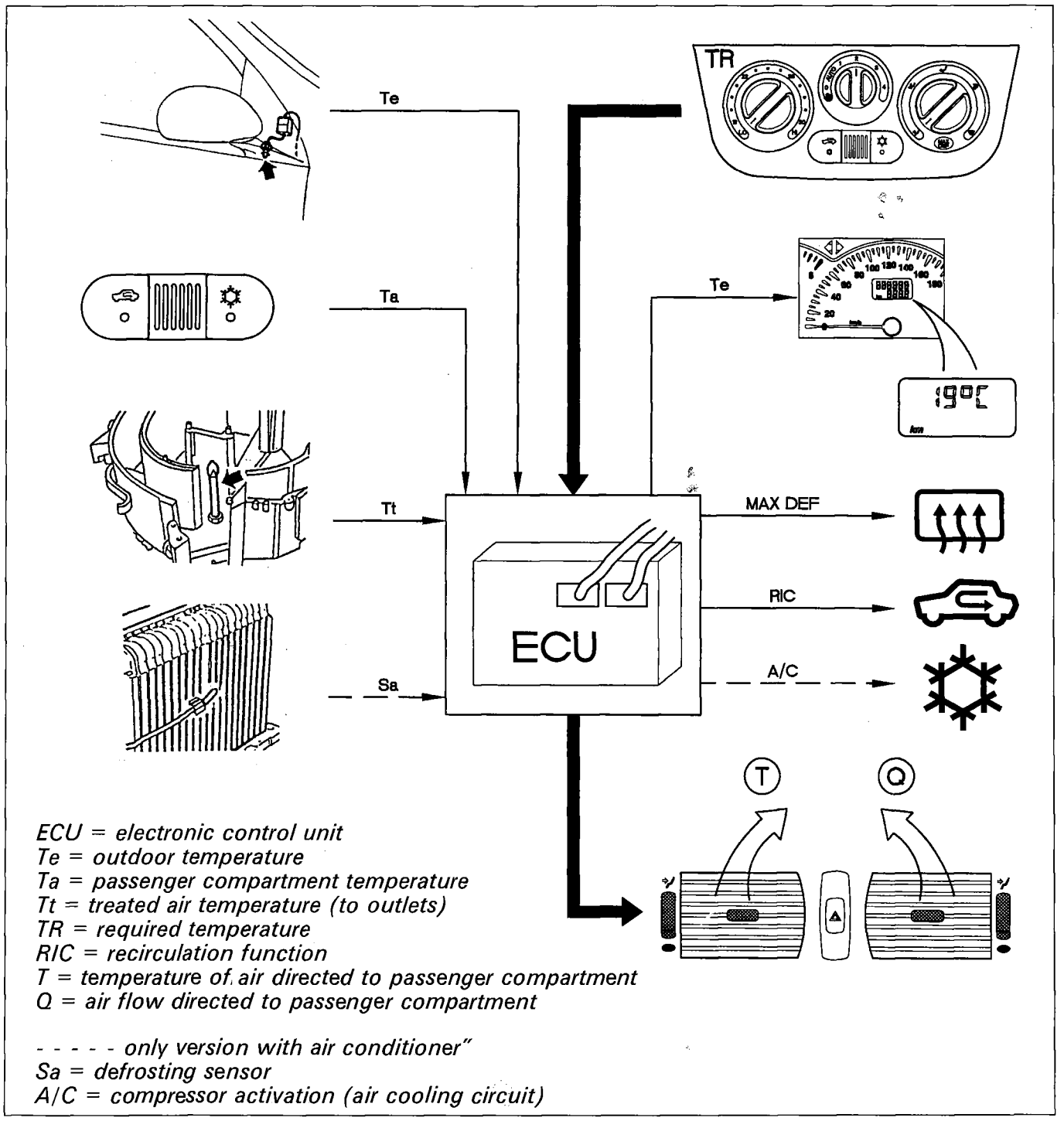

P4F02AH01

According to the requests received and the temperature conditions measured, the control unit alters certain settings to adjust the passenger compartment temperature to required levels.

CONTROLS

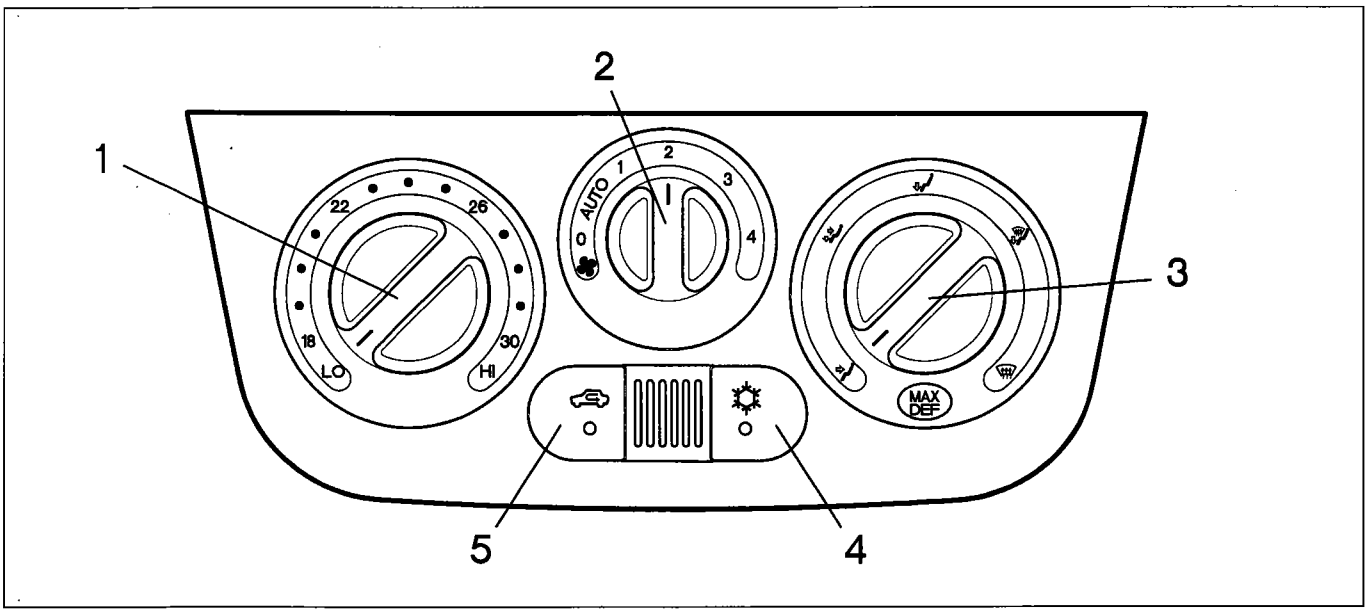

P4F03AH01

The left hand knob (1) is used to select the REQUIRED TEMPERATURE (between 18 and 30 °C): this is connected to a potentiometer which records the various angular positions and then transmits a signal to the electronic control unit corresponding to one of a total of 15 different positions (one for each degree centrigrade). The two extreme positions "LO" and "HI" correspond to maximum cooling and maximum heat respectively.

The central knob (2) controls AIR VENTILATION : this is also connected to a potentiometer which records the various angular positions and sends a signal to the electronic control unit. Four possible fixed air flows may be set manually (1, 2, 3 and 4), while the system itself automatically sets the most appropriate air flow for reaching or maintaining the required temperature if "AUTO" is selected.

NOTE *Position "0" indicates minimum ventilation: the fan is off, and only a slight air flow emerges from the outlets.*
With the compressor activated, the fan by-passes to the first speed, even if the knob is on "0".

NOTE *Two different maps inside the control unit correlate air flow and fan speed: a pollen filter on the exterior air intake reduces the flow - at the same fan speed - with the "dynamic air" setting compared to the "recirculation" setting.*

The right hand knob (3) selects one of five air FLOW DISTRIBUTION patterns: this selection is carried out manually by means of a cable which controls distribution flap movement.

When key (4) is pressed, COMPRESSOR operation is enabled (air cooling circuit). Operation is de-activated when the key is released. Activation is entirely manual: the compressor is enabled even with the key released only if "MAX DEF" mode is selected.

NOTE *KEY (4) IS NOT PRESENT ON THE "HEATER" VERSION*

When key (5) is pressed, it activates the AIR RECIRCULATION function within the passenger compartment. "Dynamic" air flows in from outside when the key is released.
Activation is entirely manual: the recirculation function is de-activated even with the key released only if "MAX DEF" mode is selected.

Copyright Fiat Auto

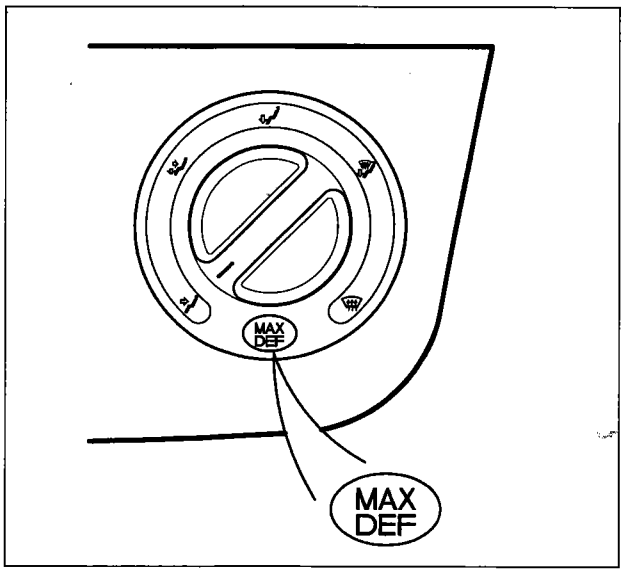

P4F04AH01

"MAX-DEF" function"

When the distribution knob is turned fully clockwise, the quick demisting "MAX DEF" FUNCTION is activated via a microswitch. This brings about:

- maximum air flow
- mixing with maximum available heat
- recirculation de-activated, regardless of the position of key (5).
- compressor enabled regardless of the position if key (4)
- heated rear window request signal : activation is controlled by the integrated service control unit (see Group 55)

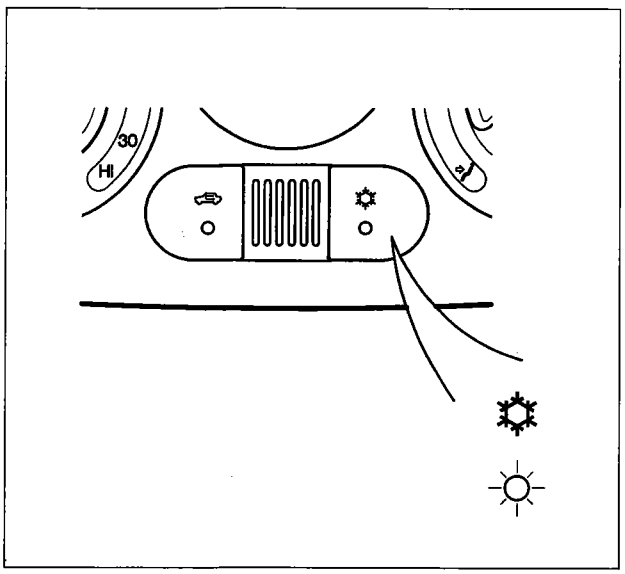

P4F04AH02

Compressor activation (only for "air conditioner" version

When the key shown in the figure is pressed, COMPRESSOR OPERATION is enabled (air cooling circuit); operation is de-activated when the key is released.

Compressor activation is dependent upon the following conditions:

- outdoor temperature less than 5°C: (de-activation below 4°C and re-activation above 6°C)
- temperature recorded by defrosting sensor: (de-activation below 3.5°C and re-activation above 5°C)

Note that the compressor may be deactivated only by the three-stage pressure switch or the engine control ECU. This system is dependent upon the various engine management ECUs as detailed below:

CONNECTION TO MOTOR CONTROL ECU

The air conditioning system electronic control unit sends a control signal to the engine control ECU to enable compressor activation.

Three different connection types are present according to the engine control unit types
A: 1998 engine
B: 1581 - 1747 - 1910TD - 2387TD engines
C: 1370 engine

NOTE *For the 1910 TD-75 version, without an engine management ECU, compressor operation is enabled by the three-stage pressure switch, a thermal switch and the EGR control unit.*

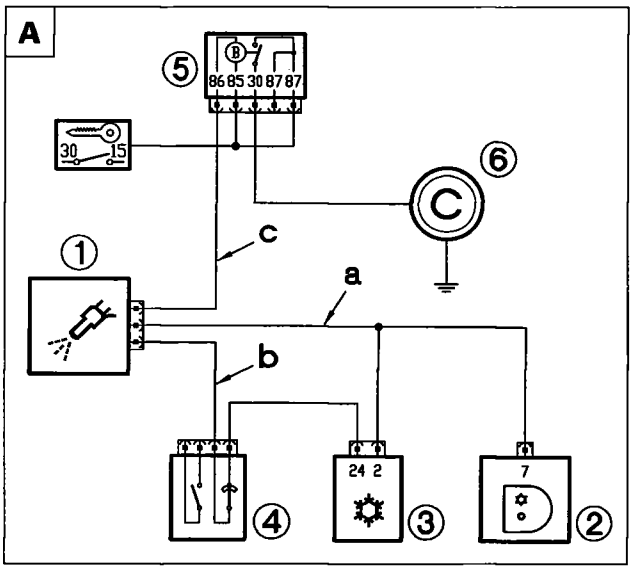

P4F05AH01

Example A: engine management control unit (1) receives compressor activation request signal (a) directly from control switch (2): the same signal is also received as enablement (b) after flowing through the air conditioner control unit (3) and three-stage pressure switch (4). If the cooling circuit pressures are incorrect, this signal is interrupted. Lastly, control unit (1) sends command (c) to activate compressor (6) via relay (5) provided no other exclusion conditions are present (e.g. maximum power demand, idling etc.).

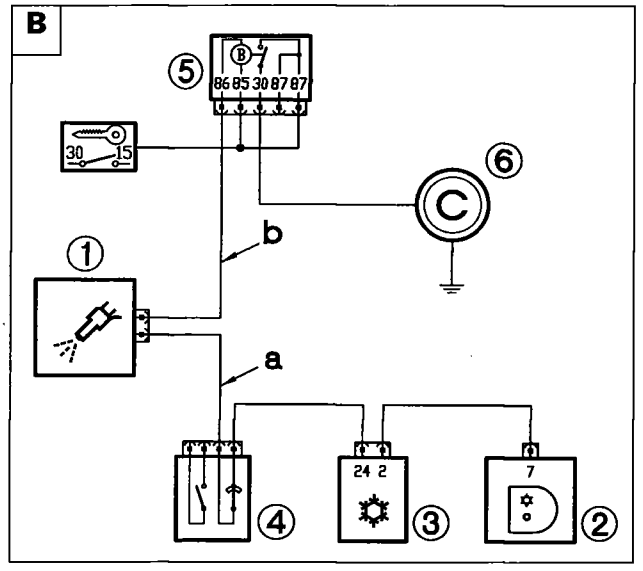

P4F05AH02

Example B: engine management system (1) receives compressor activation request signal (a) from control switch (2) and air conditioner control unit (3) . The same signal also flows through the three stage pressure switch (4): if the coolant circuit pressures are not correct, this signal is interrupted. Lastly, the control unit (1) sends command (b) to activate compressor (6) via relay (5), provided no other exclusion conditions are present (maximum power demand, idling etc.).

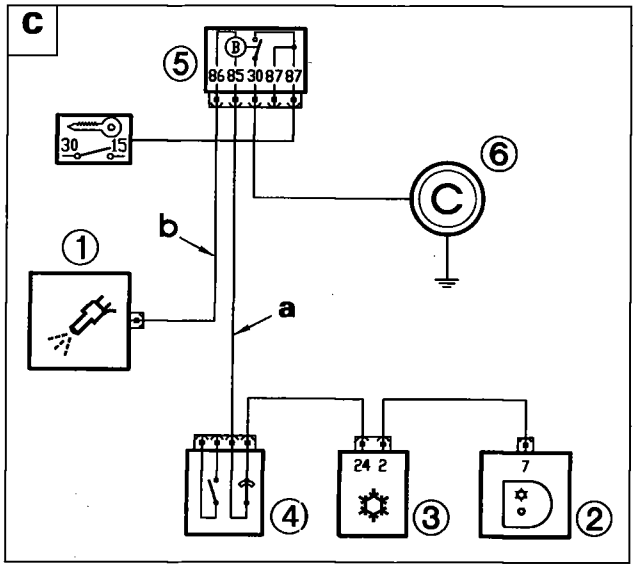

P4F05AH03

Example C: compressor activation request signal (a) from control switch (2) is sent through air conditioner control unit (3) and the three stage pressure switch (4) to the compressor activation relay (5), which also requires enablement signal (b) to arrive from engine management control unit (1), if no other particular exclusion conditions are present (e.g. maximum power demand, idling etc.).

1. *Injection ECU*
2. *Air conditioner controls*
3. *Heating/ventilation control unit*
4. *Three stage pressure switch*
5. *Compressor relay*
6. *Compressor*

Copyright Fiat Auto

SYSTEM COMPONENTS

Electronic control unit

The electronic control unit manages automatic system operation by controlling thermodynamic parameters in order to provide the conditions of climatic comfort (temperature and humidity) required by the vehicle occupants.
It is bolted to the lower part of the shroud-distributor unit by means of two bolts and is easily accessible from the passenger compartment. A connector for a Fiat/Lancia Tester is located next to it.

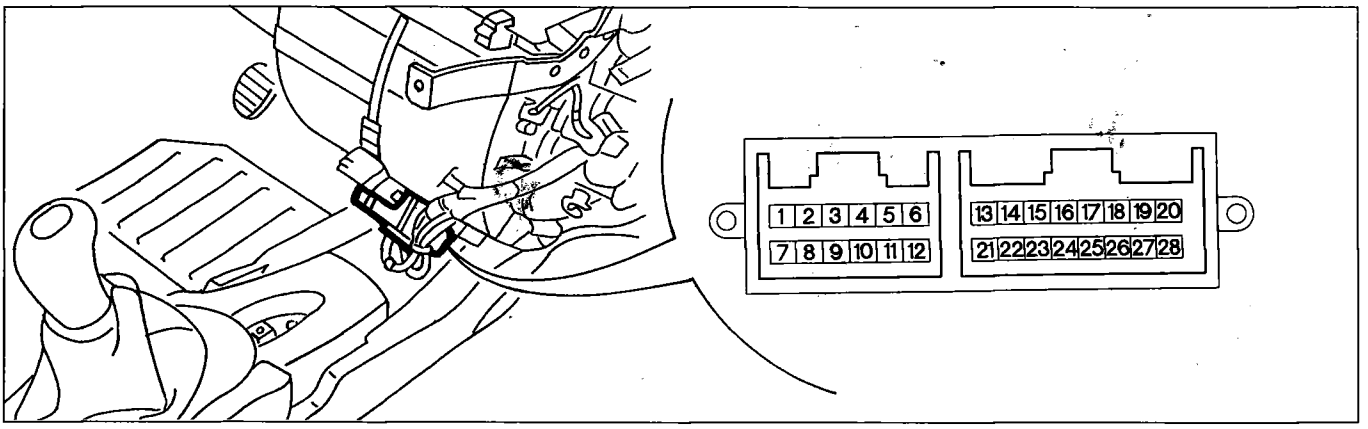

P4F06AH01

TERMINAL	FUNCTION
1	"MAX DEF"
2	Compressor activation (*)
3	Earth (NOT USED)
4	Fan potentiometer
5	Temperature request potentiometer
6	Treated temperature sensor
7	Recirculation activation
8	Tester line K
9	Tester line L
10	Potentiometer power supply - 5V -
11	+30 from battery
12	Earth for sensors
13	Earth (NOT USED)
14	Pasenger compartment temperature sensor

TERMINAL	FUNCTION
15	Outdoor temperature sensor
16	N.C.
17	Mixer actuator feedback
18	Defrosting sensor (*)
19	Control panel display
20	Fan cphtrol
21	Fan earth
22	Mixer control (LO) - 5V -
23	Mixer control (MI) - 5V -
24	Compressor control (*)
25	+15 from key
26	Recirculation activation control - 5V -
27	Recirculation cut-out control - 5V -
28	Rear window

(*) signals not present in the "HEATER" version

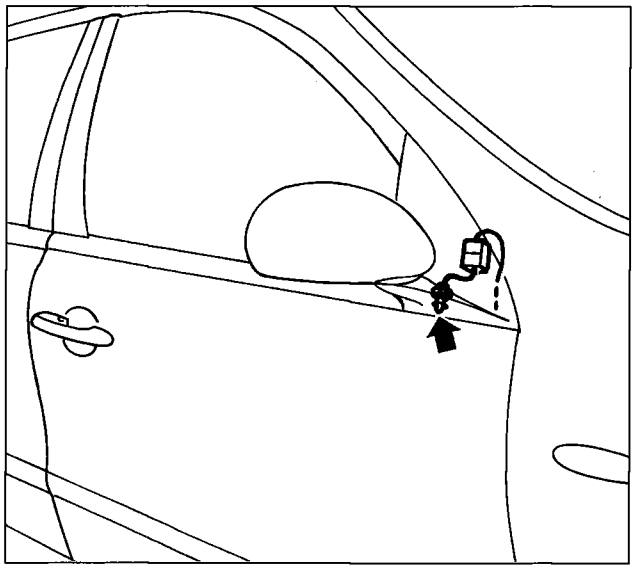

P4F07AH01

Outside air temperature sensor

This is located on the right door mirror.

It is an NTC sensor - i.e. its resistance falls with temperature (R at 25°C = 10 kOhm), with a range of operation from -30°C to +50°C

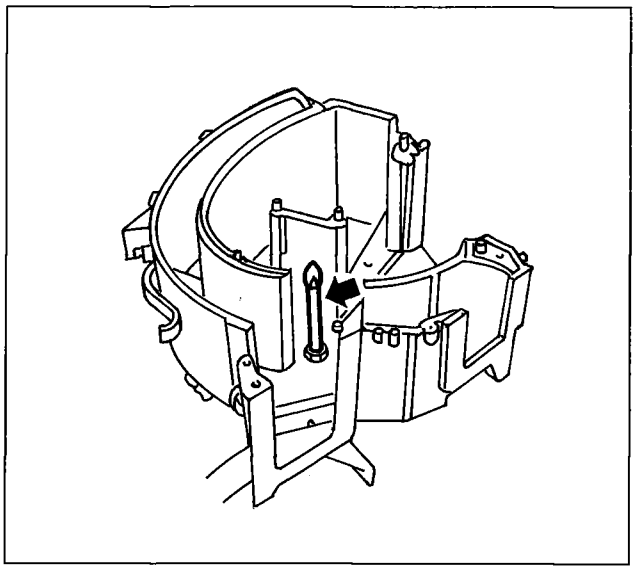

P4F07AH02

Treated air temperature sensor

This is located inside the distributor unit immediately upstream of the flaps distributing air flows to the various outlets.

It is an NTC sensor (R at 25°C = 10 kOhm), with an operating range from 0°C to +80°C

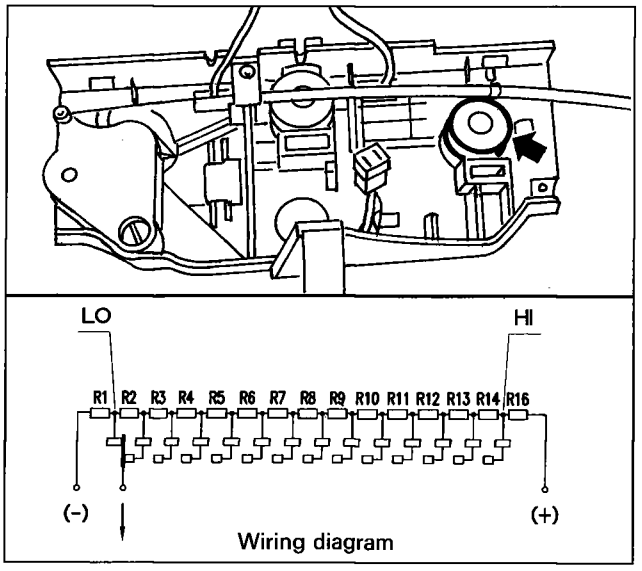

P4F07AH03

Temperature request potentiometer

This potentiometer is connected to the temperature knob and records the various angular positions. A signal is therefore sent to the electronic control unit for a total of 15 different positions (one each degree centrigrade) including two extreme positions "LO" and "HI".

It is supplied from the control unit with 5V and controlled earth, and returns a signal corresponding to knob position:

R1 - R16= 681 Ohm ± 1%

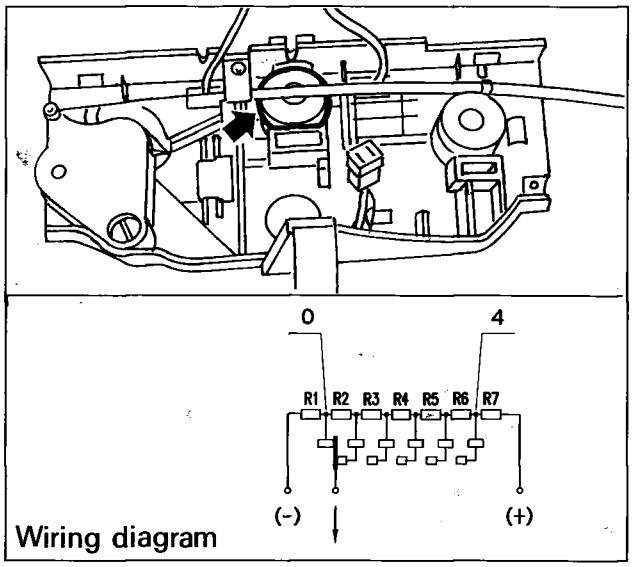

Wiring diagram

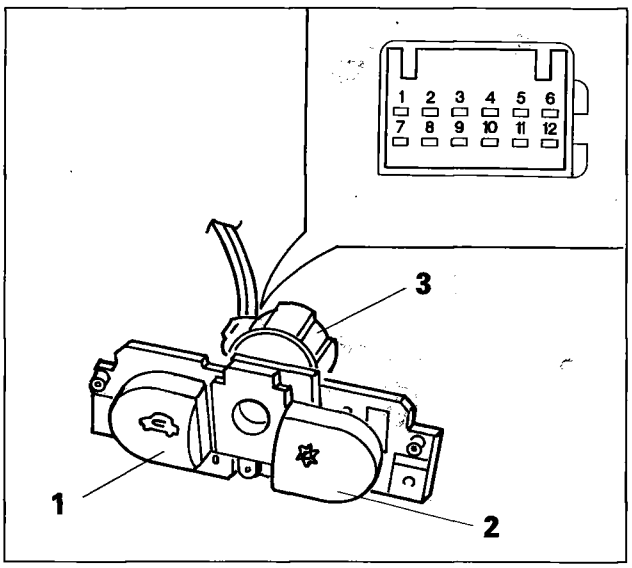

P4F08AH02

1. recirculation function switch
2. compressor enablement switch
3. pasenger compartment temperature sensor

Air flow request potentiometer

This potentiometer is connected to the air ventilation knob and records the various angular positions. It then sends a signal to the electronic control unit: four fixed manual air flow settings are available (1, 2, 3 and 4), plus "AUTO" position and "0".

It is supplied from the control unit with 5V and controlled earth, and returns a signal corresponding to the knob position:

R1-R7=1500 Ohm±1%

Recirculation function switch

When the key is pressed, the recirculation function is activated. This operation is entirely manual:

Compressor enablement switch (air cooling circuit)

When the key is pressed, compressor operation is enabled (air cooling circuit)

Pasenger compartment temperature sensor

This is located on the air conditioning control panel between the two recirculation and compressor activation knobs.
It is an NTC sensor (R at 25°C = 2.2 kOhm), with a field of operation from +5°C at +45°C. The sensor is ventilated, i.e. it contains a small permanently active fan so that the temperature value is not affected by the artificial temperature of the air trapped inside the facia.

These last three components make up a single part connected by a single connector.

Terminal	FUNCTION
1	Ventilated sensor motor (+)
2	Ventilated sensor motor (-)
3	Earth for passenger compartment sensor
4	Signal for passenger compartment sensor
5	MAX-DEF
6	N.C.

Terminal	FUNCTION
7	Compressor control
8	Warning light lighting (NC)
9	+15
10	Symbol illumination (+)
11	Symbol illumination (-)
12	Recirculation control

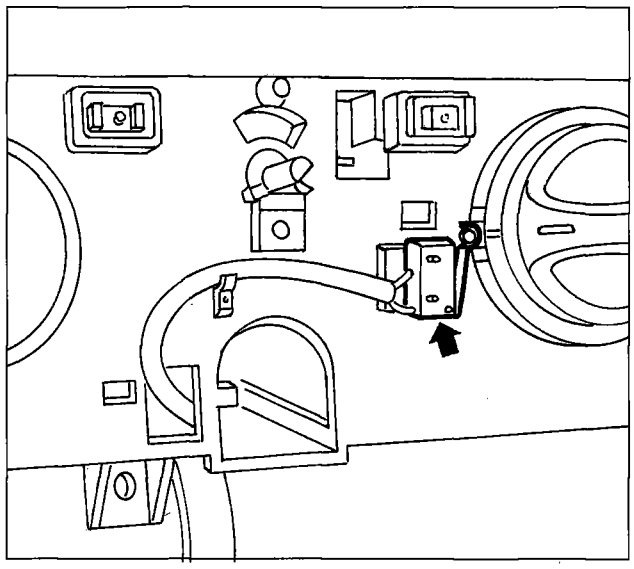

P4F09AH01

MAX DEF function switch

A special switch activates the MAX DEF function: this is located on the distribution knob: this N.A. contact is closed when the knob is turned fully clockwise.

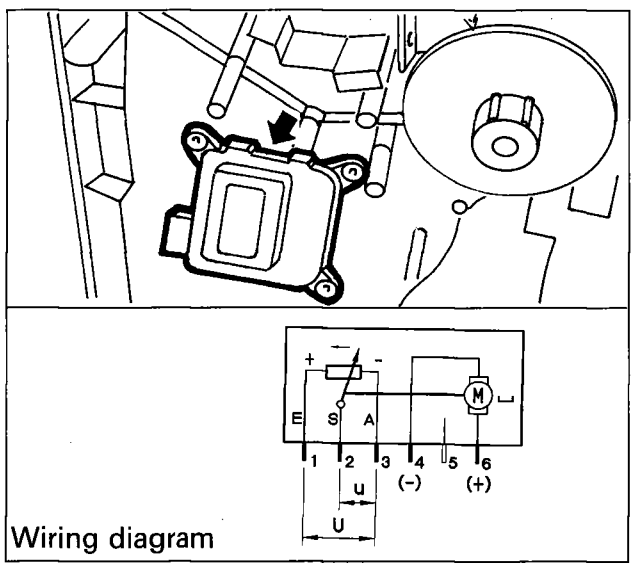

Wiring diagram

P4F09AH02

Electrical mixing actuator

Treated air temperature is adjusted by controlling the warm and cool air mixing actuator. This acts on the flap which then determines whether the incoming air flow is or is not directed to the heater radiator which has warm water flowing through it from the engine.

A motor supplied at 12 V controls the rotary movement of a control pin which acts directly on the mixer flap. A potentiometer records the actual position and provides feedback to the control unit.

Total angle of rotation between max. heat and max. cooling = 62°
Ratio u/U for max. heat = 0.707
Ratio u/U for max. cooling = 0.26

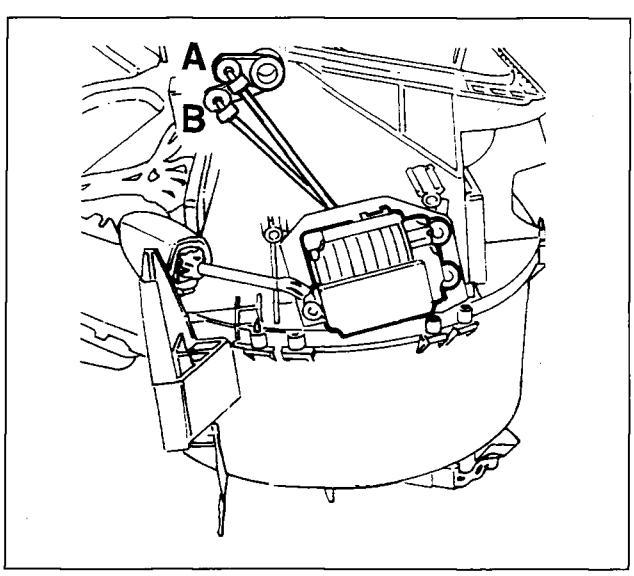

P4F09AH03

Electrical recirculation actuator

The outside air intake flap is rotated by controlling the recirculation actuator which acts on the flap itself. This moves from position (A) "dynamic air" to position (B) "recirculation". NO intermediate positions are possible

A motor supplied at 12 V controls the rotary movement of a control pin which acts directly on the flap. The flap moves in the opposite direction when the polarity is reversed.

Copyright Fiat Auto

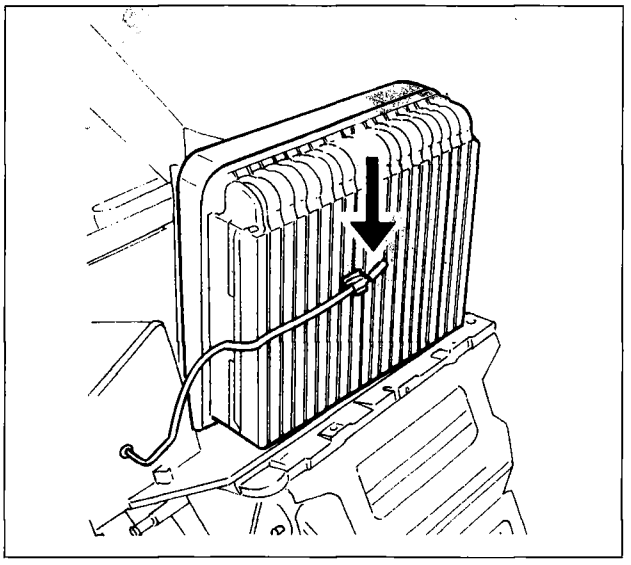

P4F10AH01

Defrosting sensor

The defrosting sensor is located inside the shroud-distributor unit, fitted directly on the evaporator. It records the temperature and communicates it to the control unit which takes any necessary measures to prevent freezing when the compressor is deactivated: This NTC sensor (R at 25°C = 10 kOhm), has an operating range from -5°C to +25°C.

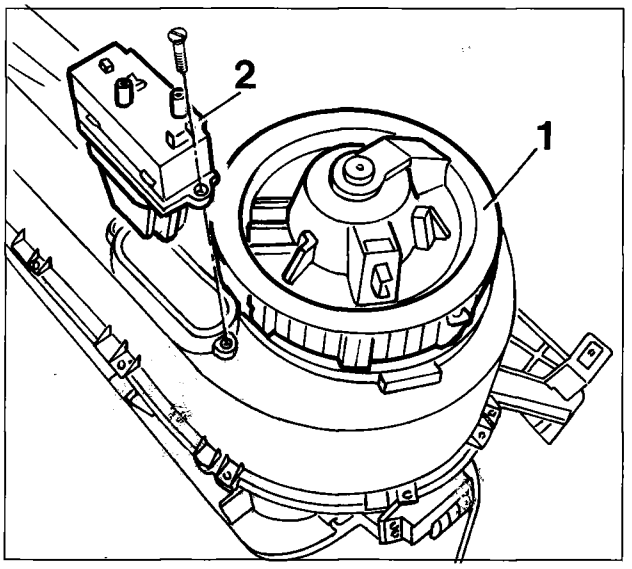

P4F10AH02

Fan with electronic speed regulator

The fan responsible for directing outdoor or recirculated air to the shroud-distributor is supplied at 12 V and is driven continuously at different speeds by an electronic regulator located near the fan itself.

1. *electric fan*
2. *electronic regulator*

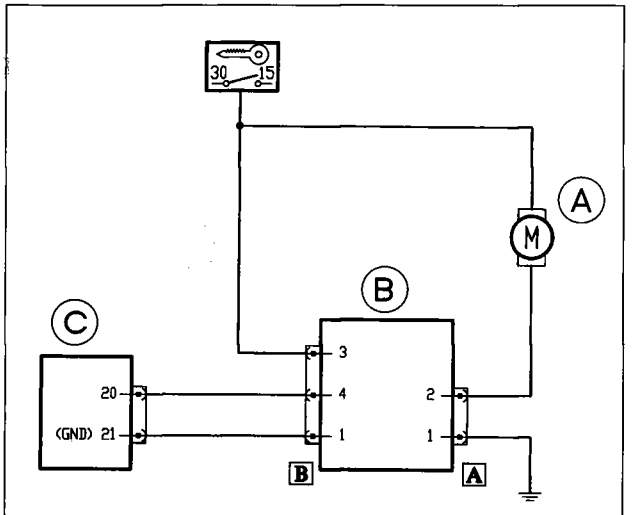

Wiring diagram

The electronic regulator receives a command signal from the control unit and converts it to a continual variable power earth signal which operates the fan.

A electric fan
B electronic regulator
C electronic control unit

AUTOMATIC DIAGNOSIS

The electronic control unit is able to record and save a series of anomalies and faults which could affect the system by means of sensor control software and self-adapting actuators
If such anomalies arise, the control unit continues to manage system operation by replacing any anomalous values with recovery values which allow the system to operate at a minimal, albeit not optimal level.

Two types of errors are saved:
- occasional errors, which are reset when the igntion key is turned to STOP
- "permanent" errors: if an error occurs more than 5 times in a given time period, it is considered permanent and saved inside the control unit: these errors are NOT reset when key is turned to STOP but only upon a specific external command (Tester).

The control unit allows saved errors to be read in two ways:
- via a FIAT LANCIA TESTER or other type of tester
- via the control panel display when enabled to read external temperature.

When a control unit error arises (even if only occasional), the wording "Error Cli" appears on the control panel. This indicates an anomaly.
If this wording remains when the "outdoor temperature" key on the middle of the facia is pressed, then the error concerns the outdoor temperature sensor. If the correct temperature value appears, the error relates to other system components. It is the possible to identify the saved anomaly by means of the following procedure:

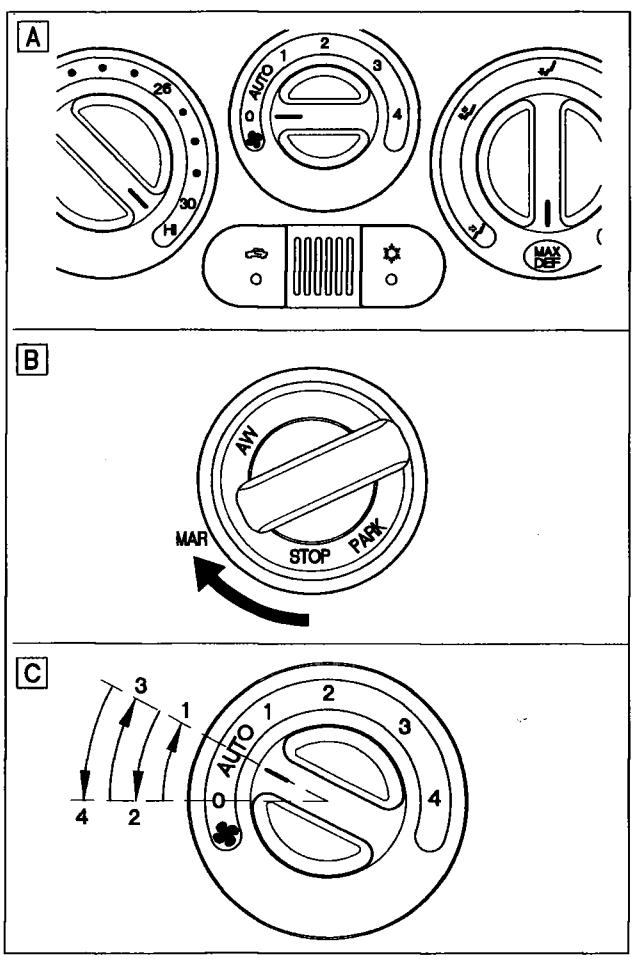

P4F11AH01

A set up the following configuration:
- temperature knob on "HI"
- distribution knob on "MAX DEF"
- ventilation knob on "0"

B turn the key from STOP to MAR

C within 10 seconds, turn the ventilation knob through the following sequence:
"0" - "AUTO" - "0" - "AUTO" - "0"

Now the control unit sends a series of messages to the control panel: one of the error codes shown in the following table is displayed in the place of "Cli".

POSSIBLE FAULTS	CODE ON DISPLAY
D.C. to treated temperature sensor earth	12
Treated temperature sensor A.C. or D.C. indistinguishable	14
D.C. to outdoor temperature sensor earth	32
External temperture sensor A.C or D.C. indistinguishable	34
D.C. to passenger compartment temperature sensor earth	42
Interior temp. sensor A.C. or D.C. indistinguishable	44
D.C. to defrosting sensor earth	52
Defrosting sensor A.C. or D.C. indistinguishable	54
Mixer actuator malfunction	65
C.C. to temperature request potentiometer earth	82
Temp. request potentiometer A.C. or D.C. indistinguishable	84
D.C. toward fan potentiometer earth	92
Fan potentiometer A.C. or D.C. indistinguishable	94
D.C. toward mixer feedback earth	B2
Mixer feedback A.C. or D.C. indistinguishable	B4
Fan governer malfunction	D5
D.C. toward 5V power source earth	E2
D.C. toward 5V supply battery +	E3

If several errors are present, they are displayed every 3 seconds.
The mileometer is displayed again once all the errors have been displayed.

*If the system is tested **AFTER A REPAIR OPERATION** which involved removal of the battery and/or control unit, it is necessary to:*
- *turn the key to MAR,*
- *wait for about **30 seconds**: the control unit runs through its self-adaption cycle*
- *return the key to STOP,*
- *carry out the test as described.*

SHROUD / DISTRIBUTOR UNIT

The assembly shown in cross section in the figure below is the main component of the system. It essentially consists of a shroud (1) and a heater-distributor assembly (2).
Shroud (1) is made up of an upper and a lower part. The right hand side of the upper part is profiled in order to match the right hand upper part of the dashboard surface (area beneath the windscreen glass of bulkhead between engine bay and passenger compartment), with which it is in contact.
Two rectangular openings are made in the upper part of the right hand side of the shroud. The first is practically horizontal and matches the opening on the dashboard through which it communicates with the outside. The other faces the passenger in almost vertical position and allows air in the passenger compartment to enter.
The upper inside part of the shroud is fitted with flap (3) which can be adjusted by means of a cursor and cable to take up any intermediate position between the limit closure positions of one of the above two openings.
Fan (4) is press-fitted inside the shroud to the lower part near the above opening. This can be supplied at different voltages to run at different speeds.
The heater - distributor unit essentially consists of a box which houess the following components in order:

- in the centre, a mixer flap which is adjusted by a knob through a cable. This allows all the air taken in by fan (4) or a proportion of the air to flow over the finned surface of the heater radiator (5);
- heater radiator (5) at the bottom centre, whose inlet and outlet fittings emerge from the right side surface of the above unit.
- four flaps at the top and side which can be adjusted by a knob through a cable, a toothed sector, a grooved disc acting as a distributor in order to close off (partly or completely), the cross section of internal shrouds which convey air to the rear footwells, front outlets and windscreen demister diffusers.

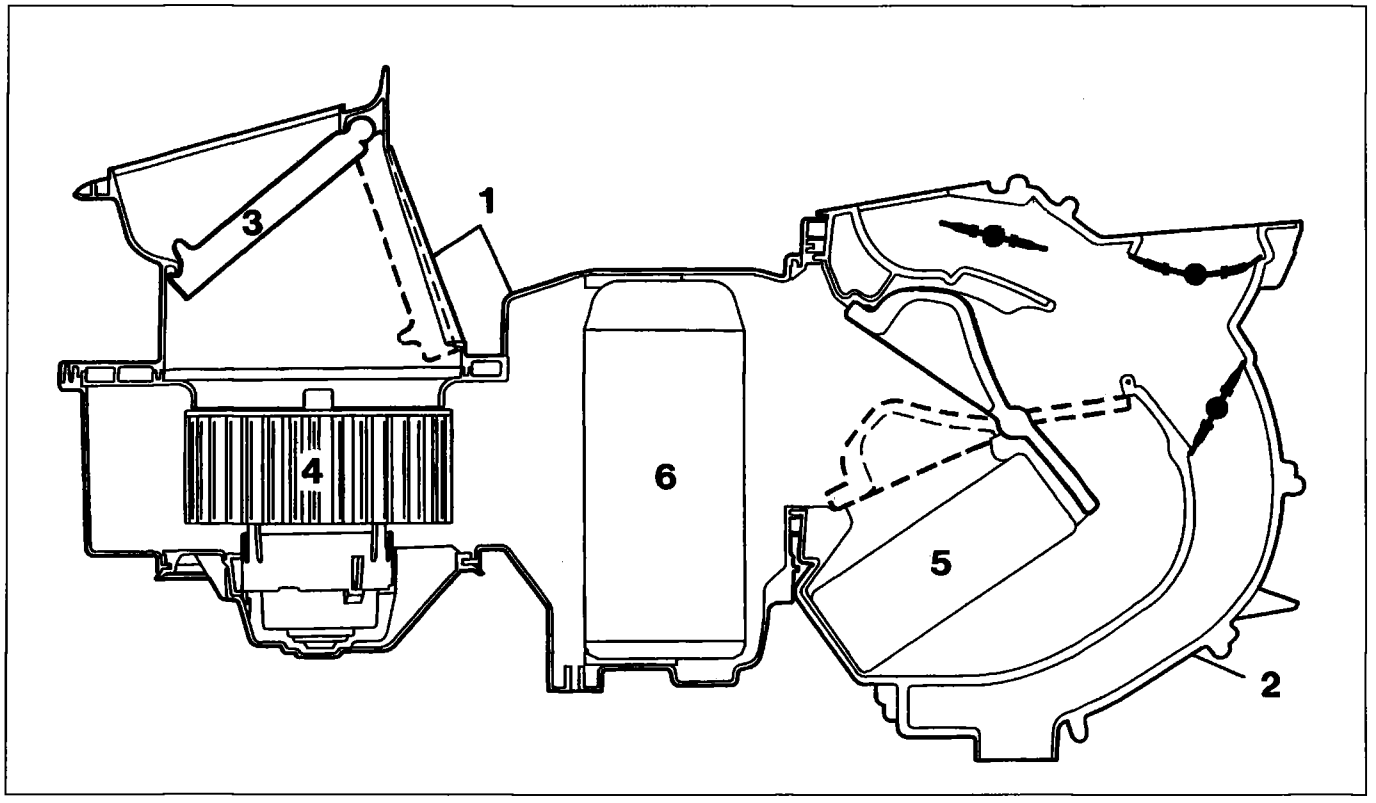

P4F13AH01

Evaporator (6) is located between shroud (1) and distributor (2) ONLY FOR THE AIR CONDITIONED VERSION

Dynamic / recirculation air

An actuator turns the air intake flap (P) between the two extreme positions: in figure A, the inner air intake is closed and the fan takes in only outside air. Outside air is prevented from entering and only recirculated air is taken in if the flap is turned to the position in figure B.

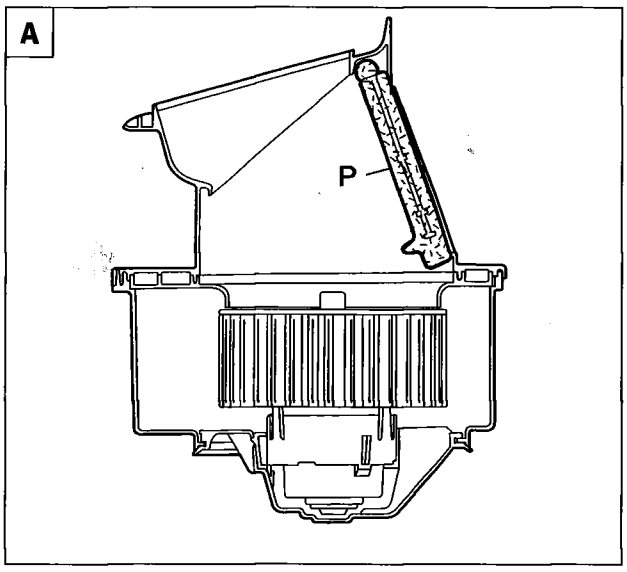

P4F14AH01

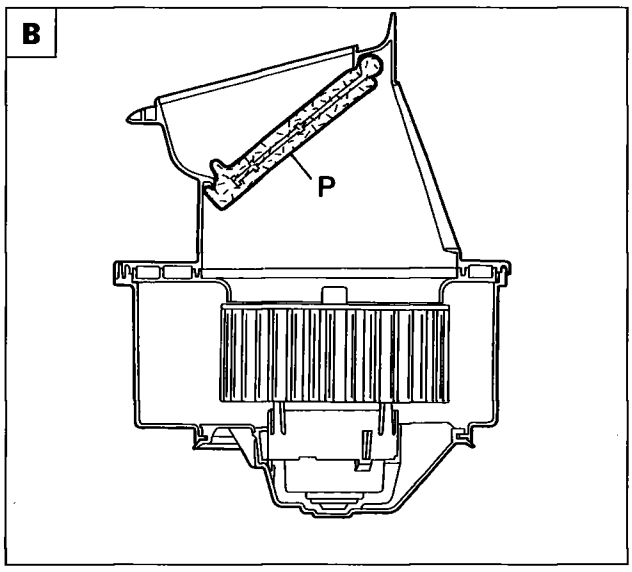

P4F14AH02

Warm/cool air mixing

An actuator turns flap (M) between the LO and HI positions.
In LO position, the flow of air taken in by the fan is distributed to the various outlets without heating because it is prevented from striking the finned surface of heater radiator (R).
When the mixer flap takes up the HI position, the entire air flow taken in by the fan is forced to strike the fins of the heater radiator. Warm air at the highest possible temperature is therefore distributed to the various outlets.
When the mixer flap assumes a position half-way between the above two positions, a proportion of the air taken up by the fan flows over the heater fins.

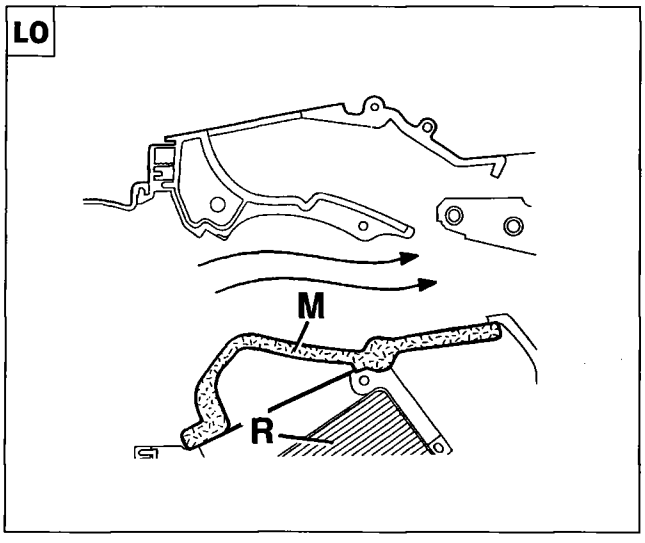

P4F14AH03

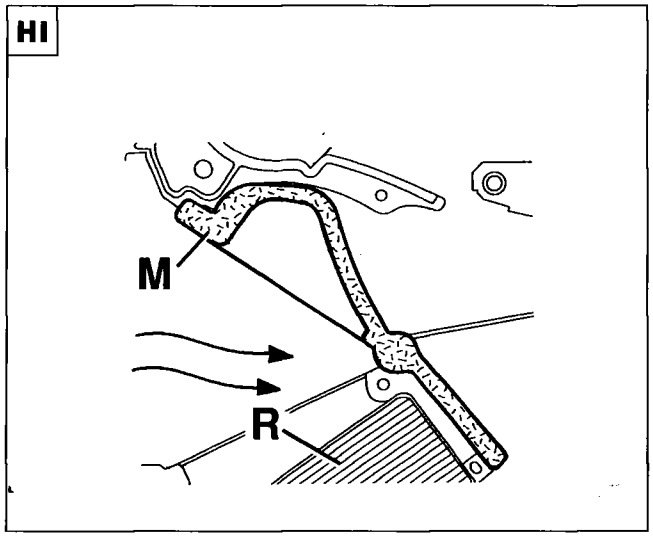

P4F14AH04

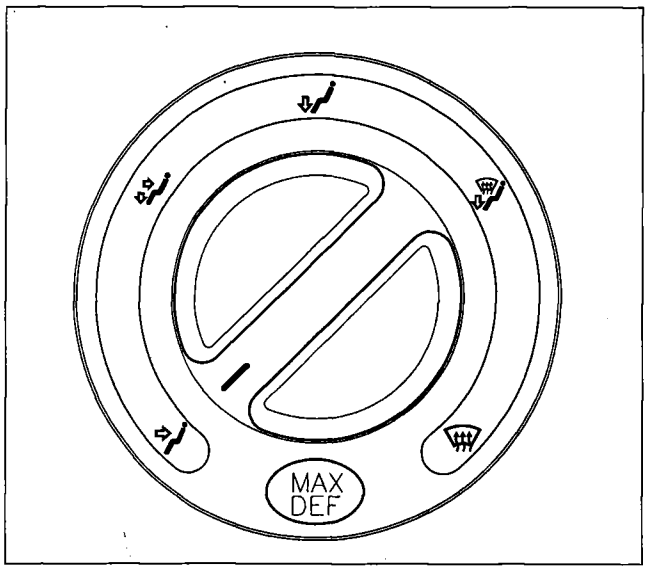

P4F15AH01

Air distribution

When the right hand knob is turned clockwise, the four distribution flaps also turn in order to distribute the air as shown in the various symbols i.e. ranging from only front outlets to only windscreen outlets as shown in the figures below.

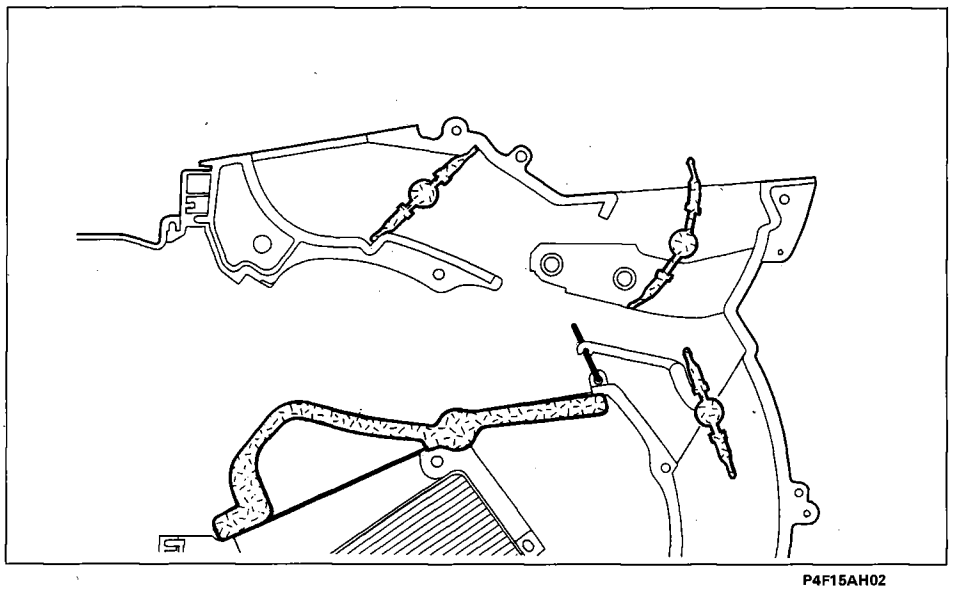

P4F15AH02

Detail showing the position of the various distribution flaps when the knob is turned fully anticlockwise

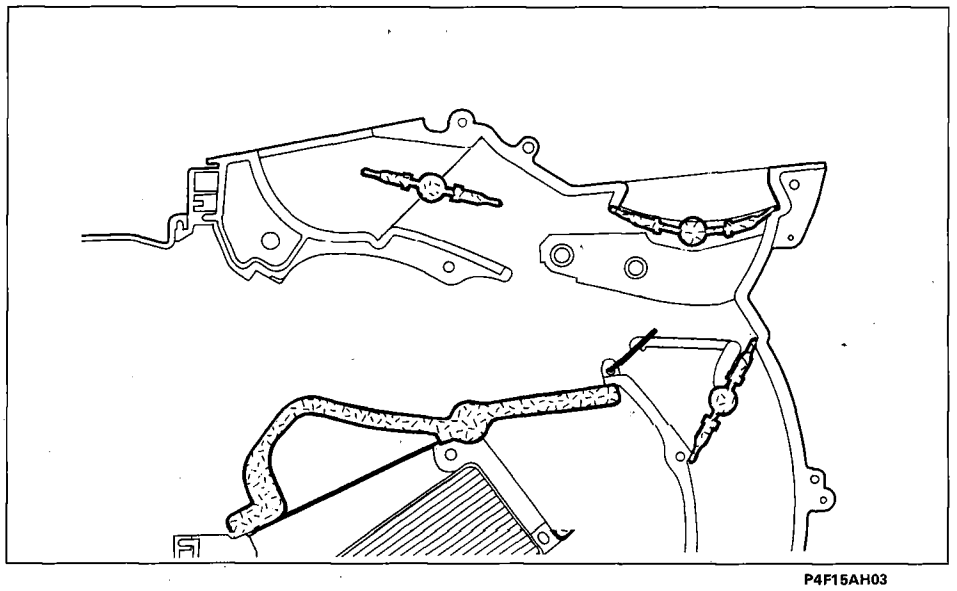

P4F15AH03

Detail showing the position of the various distribution flaps when the knob is turned fully clockwise

Copyright Fiat Auto

WIRING DIAGRAM OF THERMOSTATICALLY-CONTROLLED AIR CONDITIONER/HEATER (*)

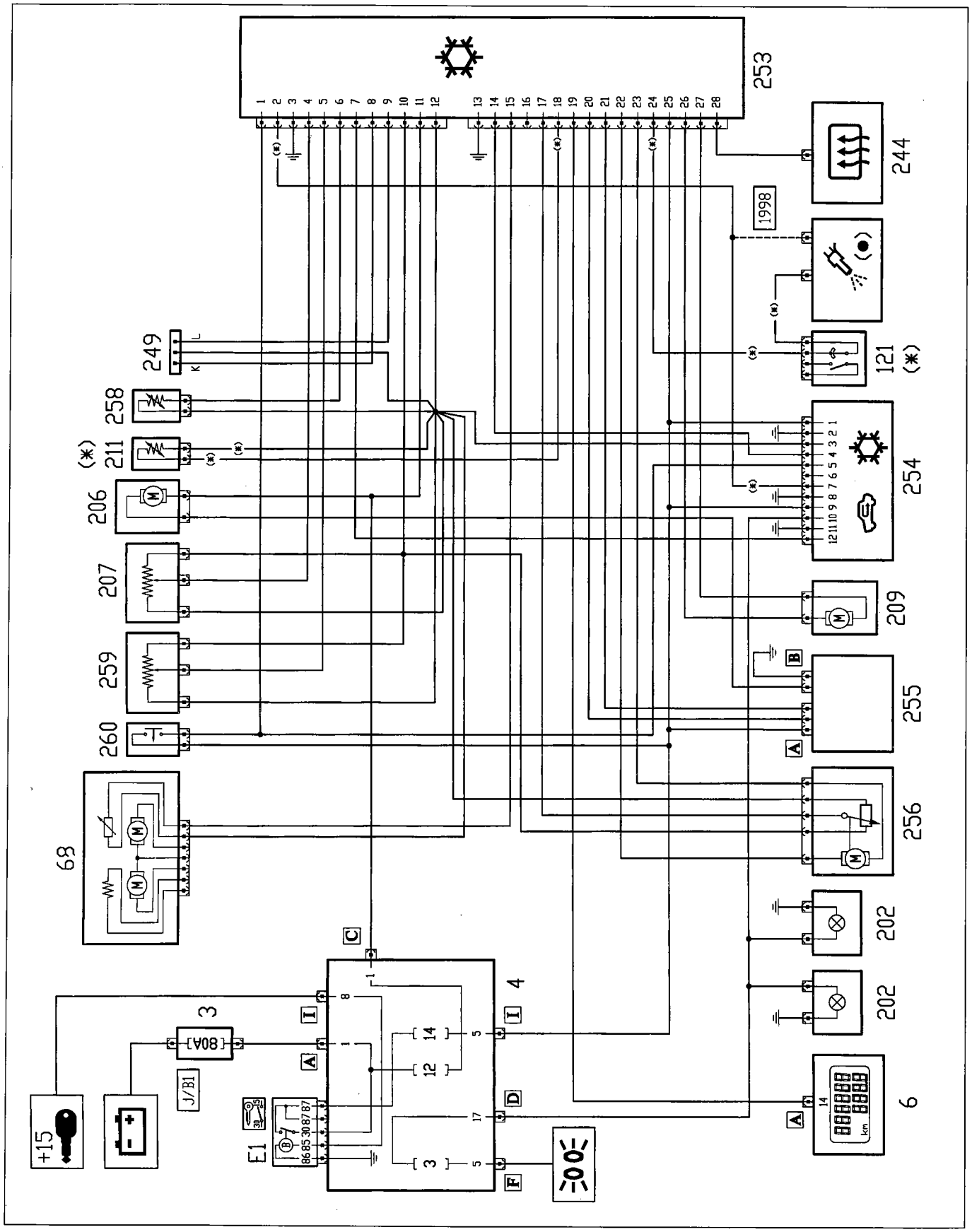

P4F22AH01

Key to components

3 Power fuse box
4 Junction unit
6 Instrument panel
68 Right door mirror
121 Three stage pressure switch
202 Air conditioner control symbol lighting bulb
206 Passenger compartment heating/ventilation fan
207 Fan speed adjustment switch
209 Air intake flap control actuator
211 Defrosting sensor
244 Integrated service electronic control unit
249 Air conditioner system tester socket
253 Air conditioner control unit
254 Air conditioner controls with passenger compartment sensor
255 Electronic speed variator for ventilation fan
256 Air mixing control actuator
258 Treated air temperature sensor
259 Required temperature adjustment switch
260 "MAX-DEF" microswitch"

(*) Connections and/or components NOT present in the "HEATER" version"
(●) See notes on connection to engine electronic control unit.

Copyright Fiat Auto

50.

HEATER WITH MANUAL CONTROLS

The assembly shown in cross section in the figure below is the main component of the system. It essentially consists of a shroud (1) and a heater-distributor assembly (2).
Shroud (1) is made up of an upper and a lower part. The right hand side of the upper part is profiled in order to match the right hand upper part of the dashboard surface (area beneath the windscreen glass of bulkhead between engine bay and passenger compartment), with which it is in contact.
Two rectangular openings are made in the upper part of the right hand side of the shroud. The first is practically horizontal and matches the opening on the dashboard through which it communicates with the outside. The other faces the passenger in almost vertical position and allows air in the passenger compartment to enter.
The upper inside part of the shroud is fitted with flap (3) which can be adjusted by means of a cursor and cable to take up any intermediate position between the limit closure positions of one of the above two openings.
Fan (4) is press-fitted inside the shroud to the lower part near the above opening. This can be supplied at different voltages to run at four different speeds.
The heater - distributor unit essentially consists of a box which houses the following components in order:
- in the centre, a mixer flap which is adjusted by a knob through a cable. This allows all the air taken in by fan (4) or a proportion of the air to flow over the finned surface of the heater radiator (5);
- heater radiator (5) at the bottom centre, whose inlet and outlet fittings emerge from the right side surface of the above unit.

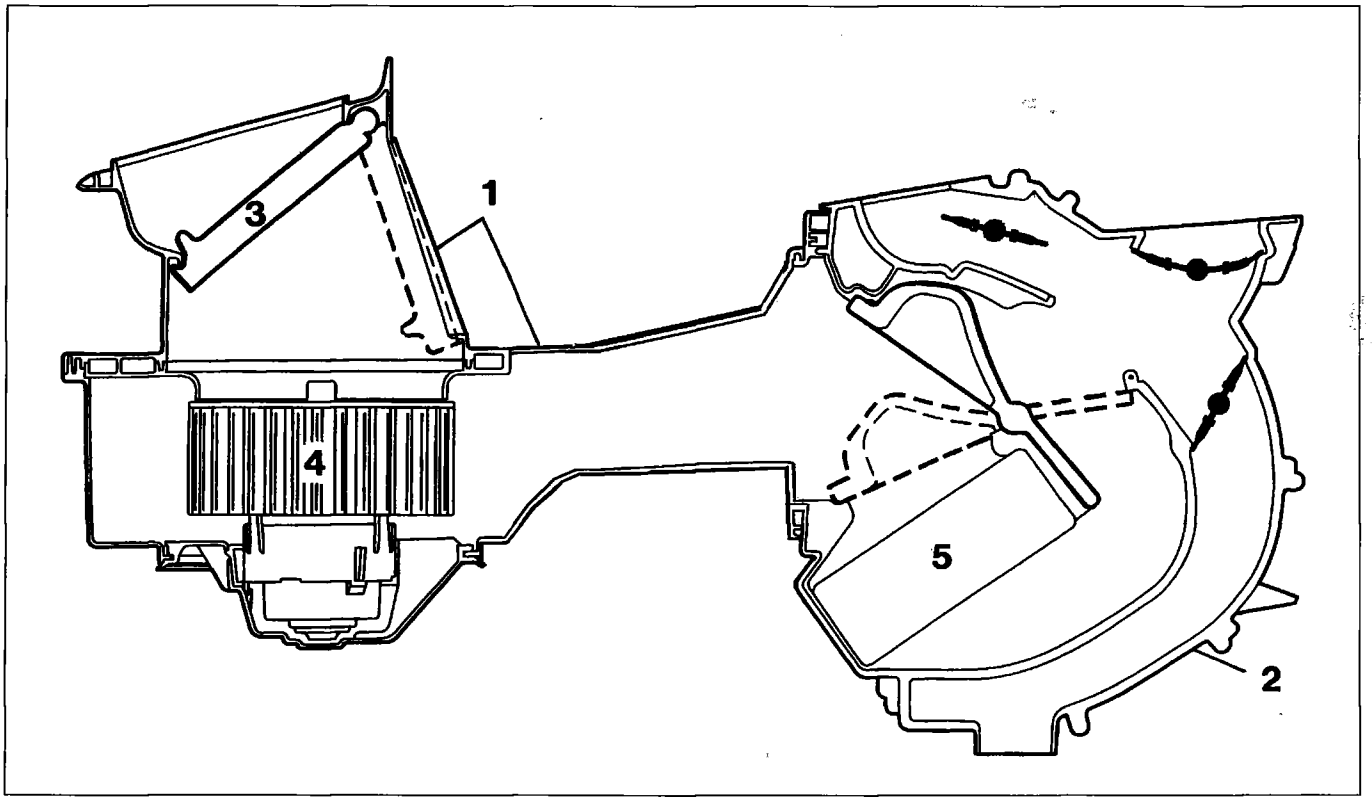

P4F018H01

- four flaps at the top and side which can be adjusted by a knob through a cable, a toothed sector, a grooved disc acting as a distributor in order to close off (partly or completely), the cross section of internal shrouds which convey air to the rear footwells, front outlets and windscreen demister diffusers.

The system controls essentially consist of three knobs and a cursor.

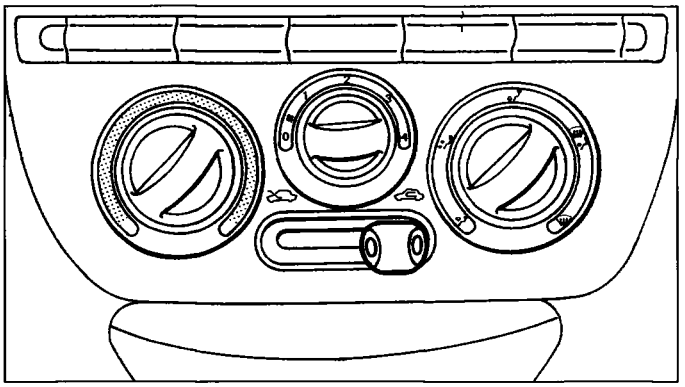
P4F019H01

When the LEFT HAND KNOB is turned, mixer flap (M) (figure overleaf) turns from its initial position (figure 1) to its limit position (figure 2).

In this system, when mixer flap (M) is in the position shown in figure 1, the air flow taken up by the fan is distributed to the various outlets without undergoing any temperature change because the finned surface of the heater radiator is not struck by the air flow.

When the mixer flap takes up the limit position shown in figure 2, the entire air flow taken up by the fan is forced to hit the heater radiator fins. Warm air at the maximum possible temperature is therefore distributed to the different outlets.

When the mixer flap takes up an intermediate position between the above two positions, only part of the air flow taken in by the fan flows over the radiator fins. It therefore mixes with the residual flow before being distributed to the various outlets. The temperature of the air leaving these outlets is directly proportional to the size of the flow striking the radiator. This flow increases as mixer flap position approaches the position shown in figure 2.

When the central knob is turned clockwise, passenger compartment fan runs at increasing speed and the volume of air taken in and distributed to the various outlets also increases.

When the RIGHT HAND KNOB is turned clockwise, the four distribution flaps also turn in order to distribute the air as shown in the various symbols i.e. ranging from only front outlets to only windscreen outlets.

A cursor beneath the central knob positions the air intake flap as required.

If the cursor is moved fully to the left, air intake flap (P) is almost vertical (figure A) and closes the interior air intake so that the fan takes in only outside air. Outside air is inhibited and recirculation air is taken in if the cursor is moved fully to the right (figure B).

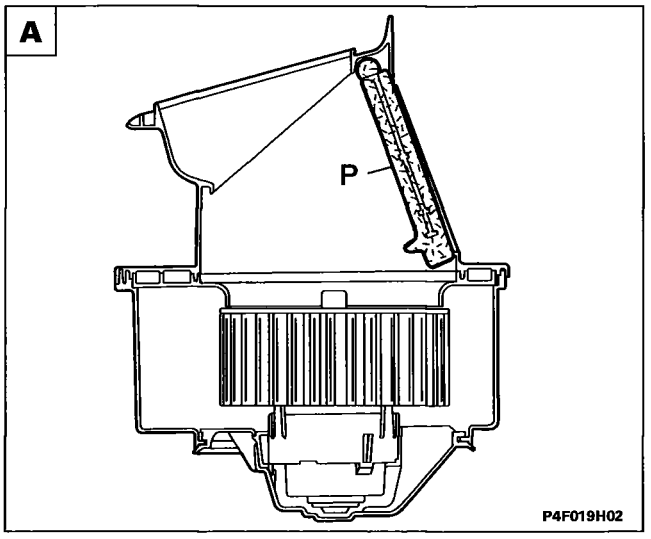

P4F019H02

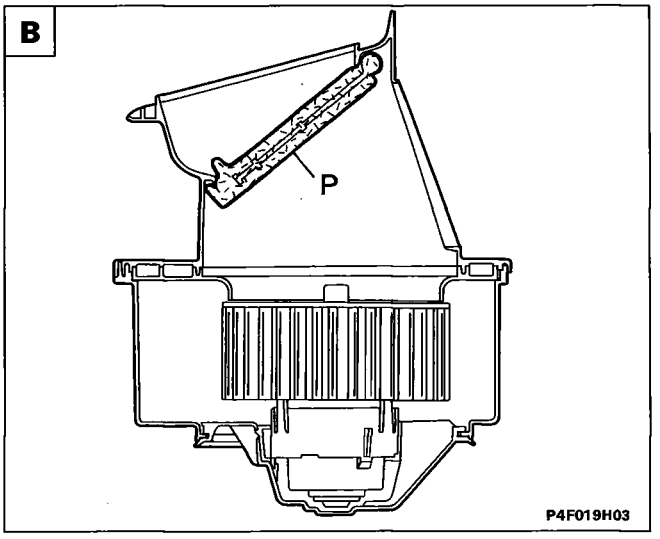

P4F019H03

Air intake flap positions corresponding to cursor HI and LO positions

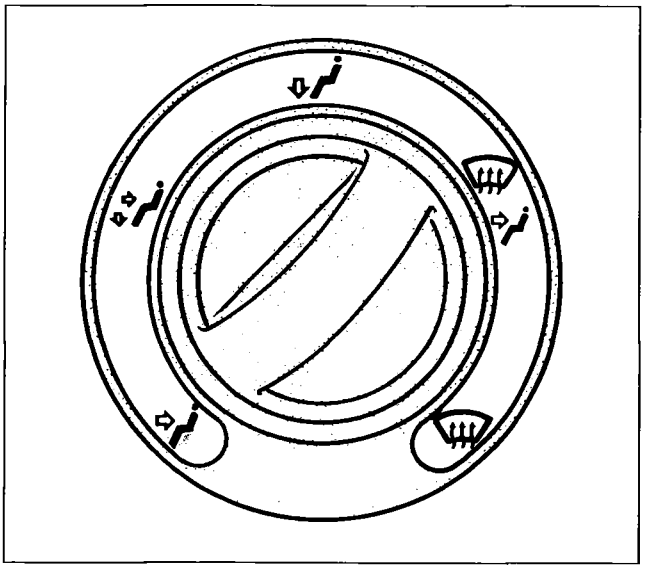

P4F020H01

Detail showing right hand distribution flap control knob

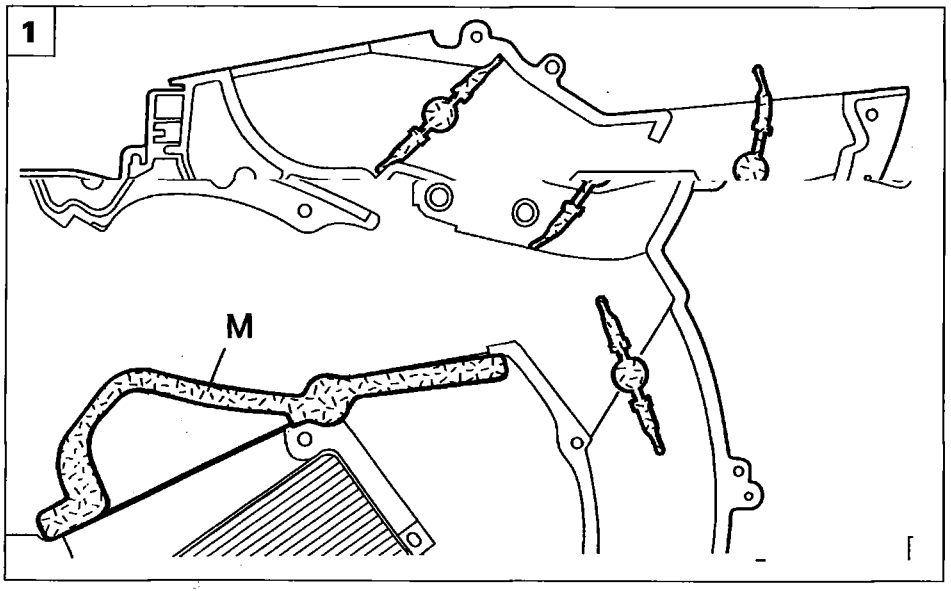

P4F020H02

Detail showing positioning of the various distribution flaps and the mixer flap when the right and left hand knobs are turned fully anti-clockwise

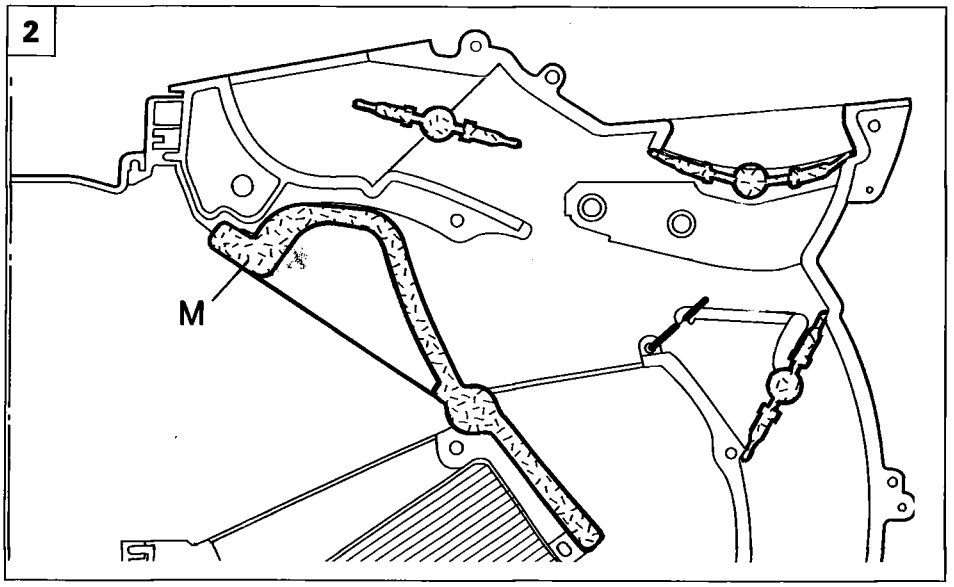

P4F020H03

Detail showing positioning of distribution and mixer flaps when right and left hand knobs are turned fully clockwise

COMPRESSOR

The NIPPODENSO TV 12 SC compressor fitted to all versions is vane type and equipped with a pressure regulator that adjusts flow when evaporator temperature reaches values when freezing could occur. This situation is indicated by a drop in compressor intake pressure.
The compressor essentially consists of case (1), which contains chamber (2). Four vanes (3) turning inside the chamber are driven by hub (4), whose axis of rotation does not coincide with the theoretical chamber centre line. The geometrical configuration of the chamber ensures that the rotating vanes are always in contact with the inside surface of the chamber. The assembly thus allows the space between one vane and the next to be altered during rotation.
Two covers are secured to case (1), one at the front (5) and one at the rear (6). These contain an inlet or low pressure chamber (7) and a high pressure chamber (8). Gas is taken in through intake (10) on cover (5) and passes through low pressure chamber (7) and slot (11) on case (1).

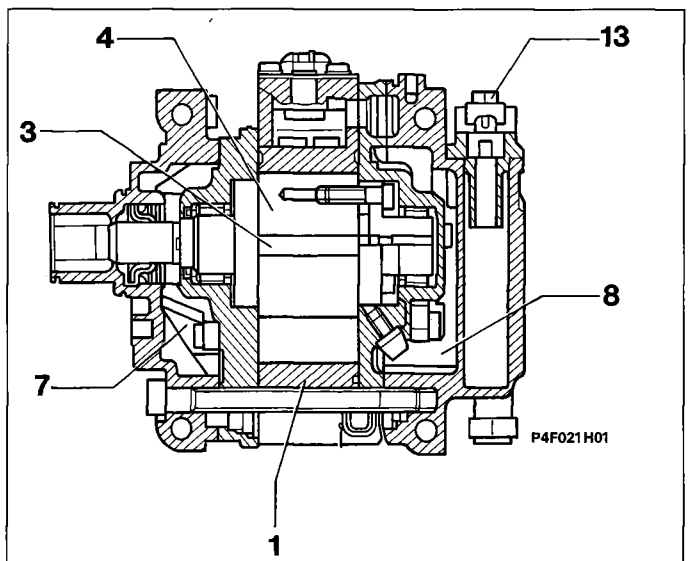

Compressed gas is expelled through duct (12) in high pressure chamber and admitted through fitting (13). Strip valve (14) prevents high pressure gas from flowing back into the compressor when it stops.
A thermal contact (15) on the top of the case is connected in line with the electromagnetic coupling. When the temperature reaches dangerous levels at about 180 °C, thermal contact (15) deactivates the pulley electromagnetic coupling.

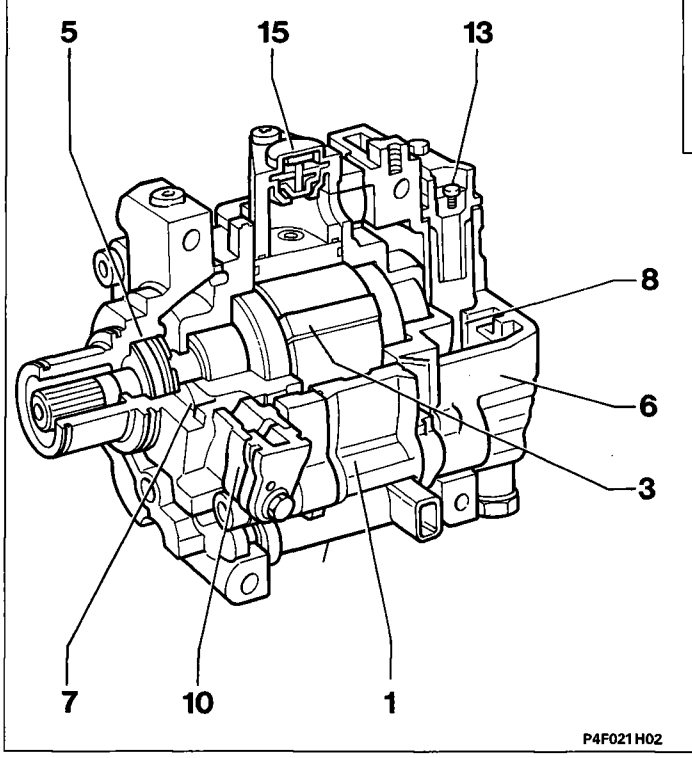

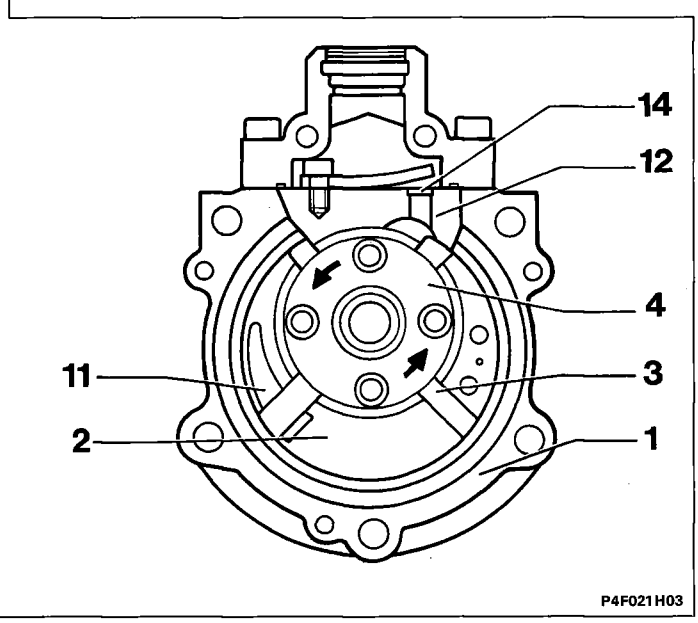

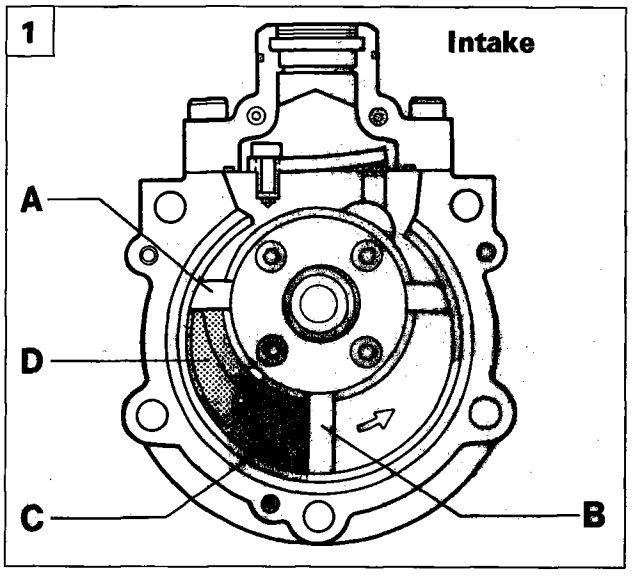

P4F022H01

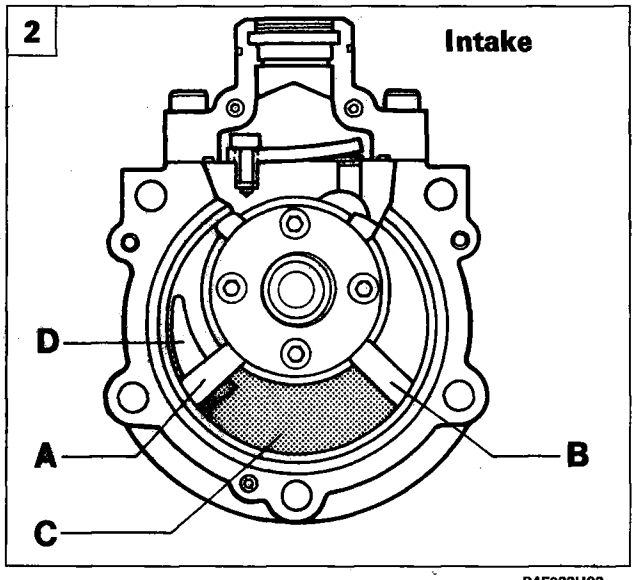

P4F022H02

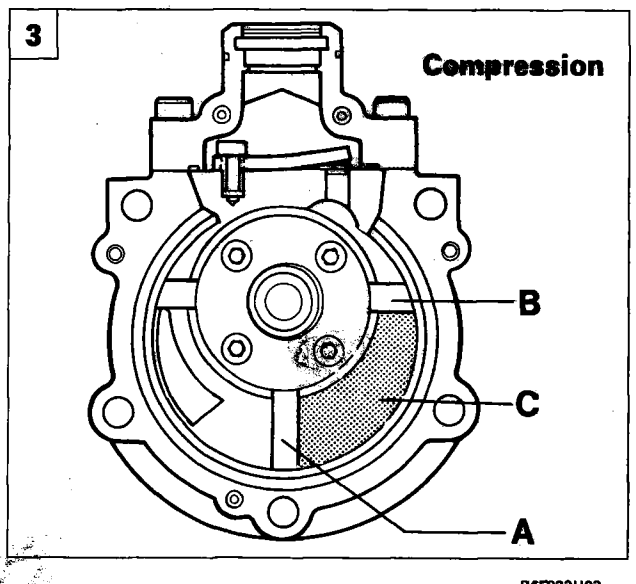

P4F022H03

OPERATION

1. Gas is taken in through slot (D) and then expands in compartment (C), which is delimited by vanes (A) and (B).
2. The new position of vanes (A) and (B) ensures that compartment (C) is at maximum volume. In particular, vane (A) cuts off communication between compartment (C) and slot (D) to complete the intake stage.
3. Compartment (C) reduces in volume and gas pressure increases: the compression stage thus begins.
4. Gas pressure increases further until strip valve (E) opens: at this moment the compression stage ends and the exhaust stage begins.
5. When vanes (A) and (B) take up the position shown in the figure, the exhaust stage is complete.

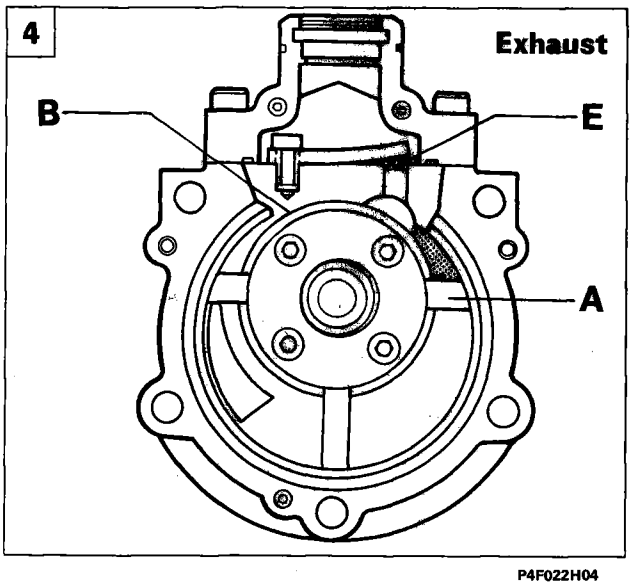

P4F022H04

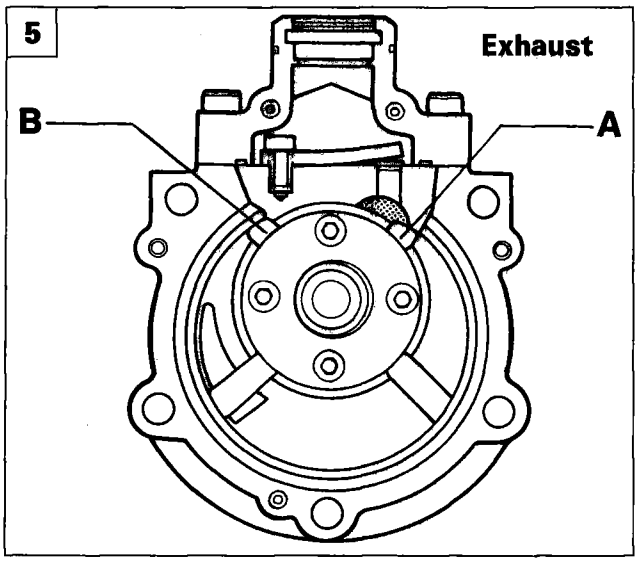

P4F022H05

Flow control

Flow control is achieved via an electropneumatic mechanism built into the compressor. This by-passes part of the gas in the compression stage to the intake, i.e. the low pressure chamber. When activated, this system, **allows compressor output to be reduced to about 17% of the total with the engine at 1000/min.**

The mechanism consists of a piston (A) that slides through cylinder (C) countered by spring (B). When the piston is positioned as shown in fig. A it blocks holes (D) that bring compartment (E; in which gas compression begins) into communication with low pressure chamber (F). Viceversa, when piston (C) is in the position in fig. B, holes (D) are in communication. The piston is operated by a small proportion of the gas under pressure, taken up by duct (I) that communicates with calibrated holes (G). The mechanism is governed by automatic pressure regulator (H), which intervenes according to pressure in compressor low pressure chamber (F). This pressure is directly proportional to evaporator outlet fluid properties. High pressure in chamber (F) thus brings about high evaporator outlet temperature. Low pressure brings about low temperature.

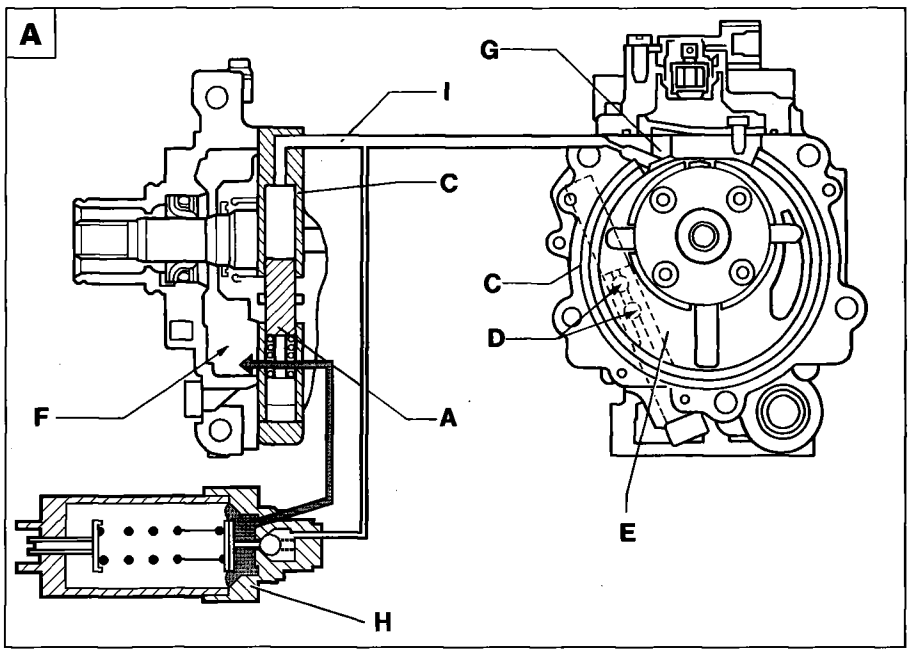

P4F023H01

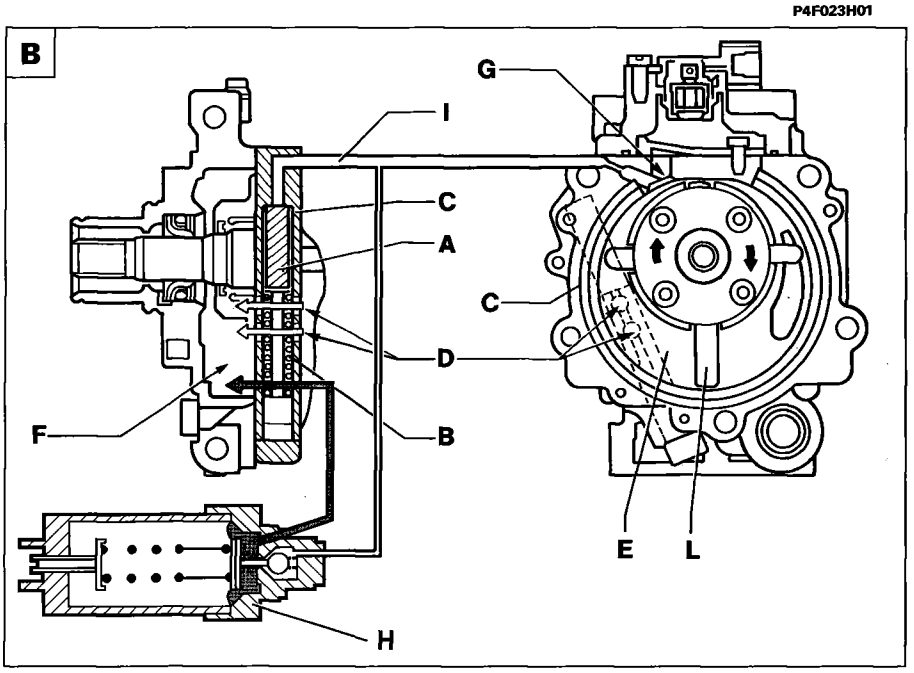

P4F023H02

The pressure regulator consists of a ball valve controlled by reference pressure (chamber F), countered by a spring. When reference pressure is high, this overcomes spring load and the valve remains closed. Gas pressure acts on piston (A) to restore it to the position in figure A.

Holes (D) are cut off and gas compression begins in chamber (E) as described in the previous pages.

When reference pressure is too low to overcome spring load, ball valve opens (Fig. B) to allow gas under pressure in duct (I) and cylinder (C) to flow into low pressure chamber (F) . Piston (A) is therefore pushed into rest position by spring (B) to open up by-pass holes (D).

In this way, part of the gas in chamber (E -at the compression stage) is able to flow into the low pressure chamber (F), until vane (L), has passed holes (D).

By reducing the quantity of gas in chamber (E), compressor output is also be reduced to about 17%.

Copyright Fiat Auto

Lubrification

Lubrication oil (A) is contained in the high pressure chamber (B). When the compressor is working, the high pressure in chamber (B) forces oil through calibrated hole (C) to the moving parts inside.
Oil mixed with gas (D) is expelled through strip valve (L) to the high pressure chamber.
A separator device (E) installed in gas outlet fitting (F) separates the gas from the oil that falls under the force of gravity to the bottom of chamber (B) while the gas emerges from fitting (F).
This device minimises the amount of oil entering the system and thus increases thermal efficiency.
The compressor is also fitted with two safety valves (H) that discharge any excess pressure in compression chambers (I).
The valves open when the pressure difference between chamber (I) and chamber (B) exceeds 4 bar.

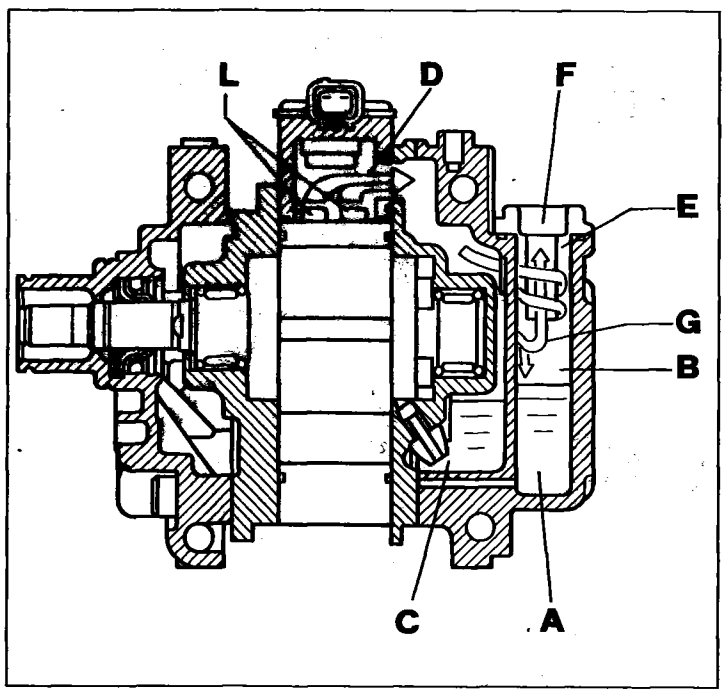

P4F024H01

To prevent the oil in the compressor from flowing into the compression chamber or the upper part of the chamber and a possible momentary loss of lubrication to the moving parts, it is essential that the compressor is always positioned with the cover turned up as shown in the figure overleaf when not installed.

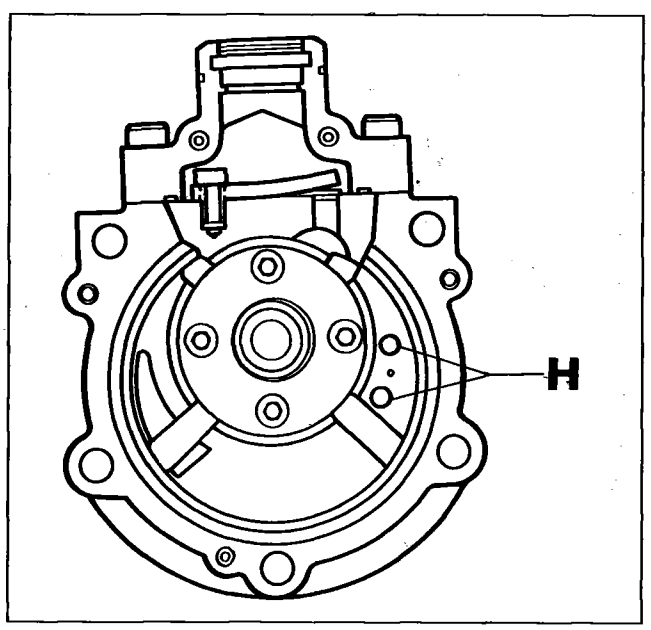

P4F024H02

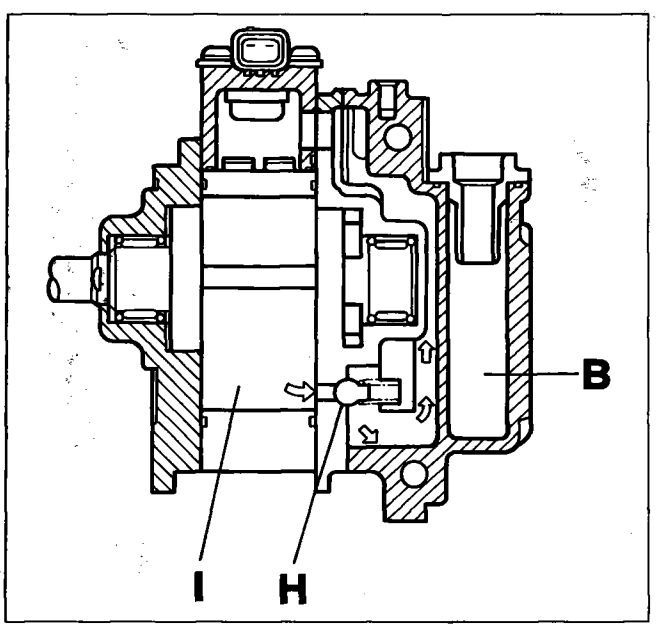

P4F024H03

Pulley electromagnetic coupling

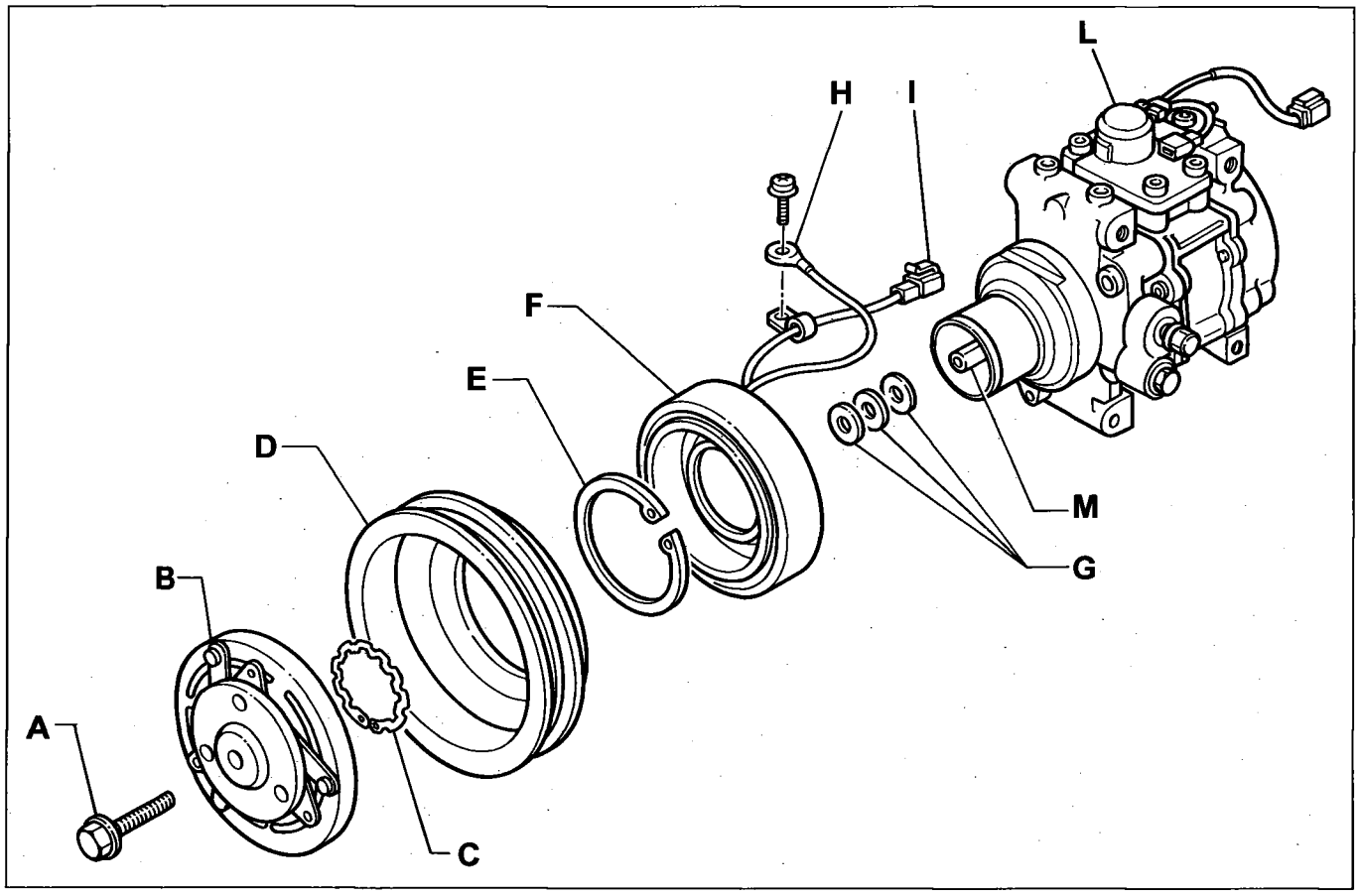

P4F025H01

Parts of pulley electromagnetic coupling

A. Screw retaining electromagnetic coupling assembly to compressor shaft (M)
B. Hub with rubber coupling
C. Pulley retaining ring
D. Pulley for Poly-V belt
E. Solenoid retaining ring
F. Solenoids
G. Clutch clearance adjustment shims
H. Solenoid earth lead
I. Lead connected in line to safety thermal contact
L. Safety thermal contact

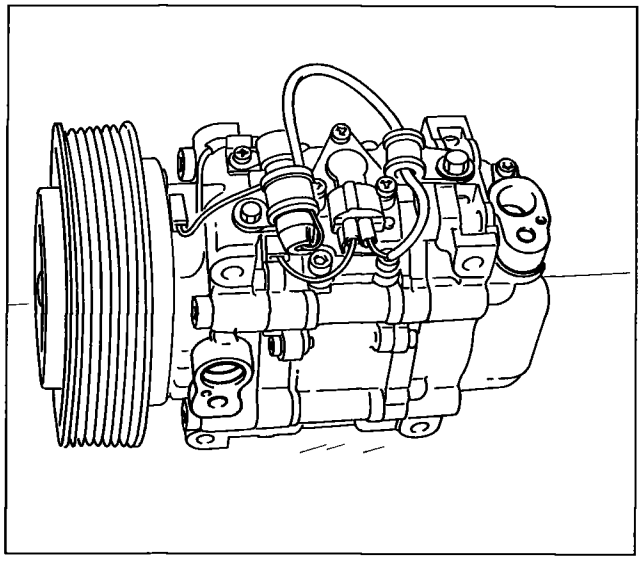

P4F025H02

NOTE *Safety thermal contact (L) opens when compressor temperature reaches a level of about 180 °C and closes when it reaches a value of about 120 °C.*

Whenever the compressor is removed or handled, it should be positioned with the cover facing upward as shown in the figure to avoid oil leaks and the compressor becoming contaminated.

50.

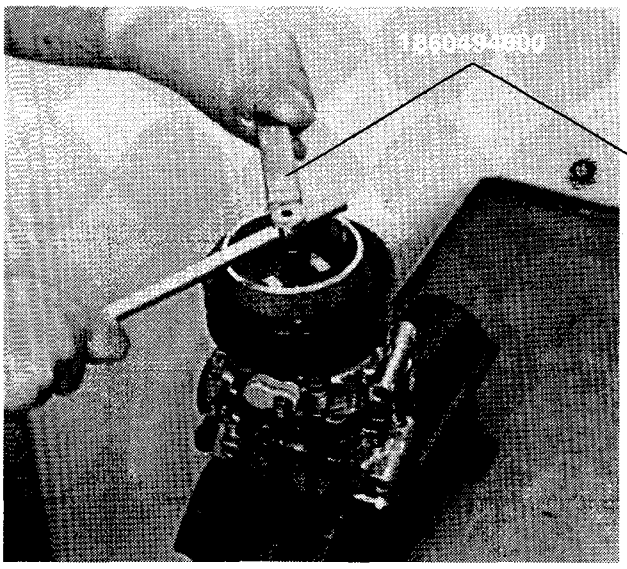

P4F026H01

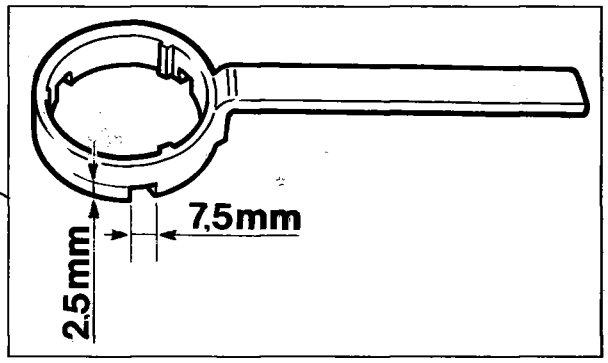

P4F026H02

Removing-refitting parts of pulley electromagnetic coupling

Make three equidistant millings at the distances shown in the figure on tool 1860494000.
Secure hub with tool 1860494000 and remove the retaining nut.

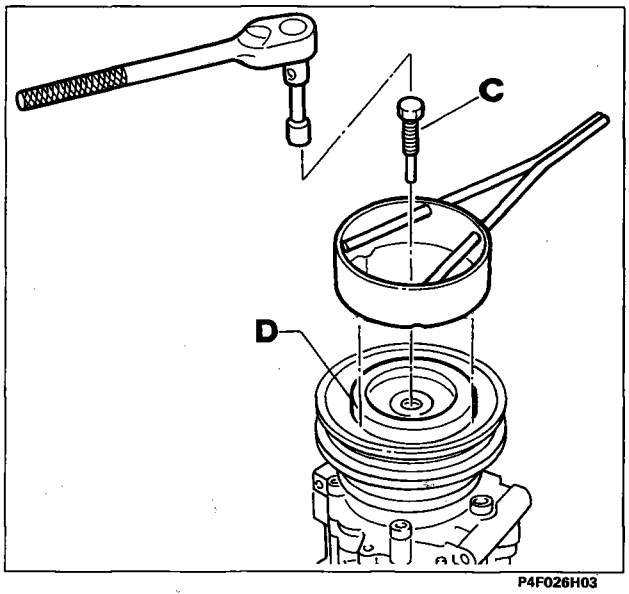

P4F026H03

Fit extractor (C) and remove (D).

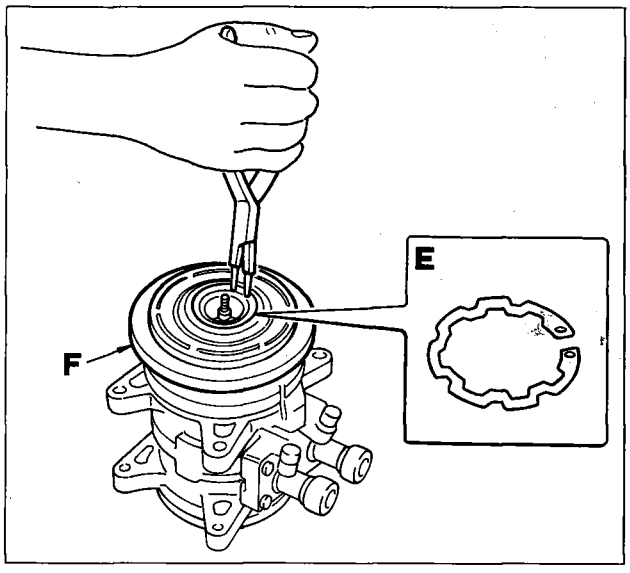

P4F026H04

Use round-nosed pliers to remove pulley retaining ring (E) and take off pulley (F).

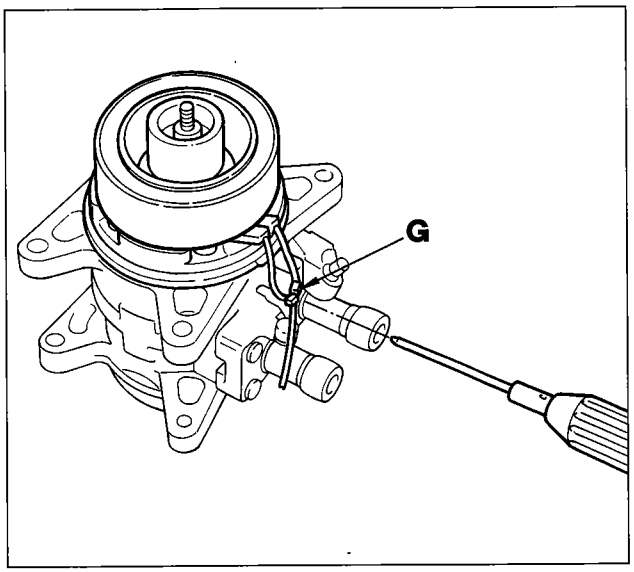

P4F027H01

Remove solenoid lead retaining screw (G).

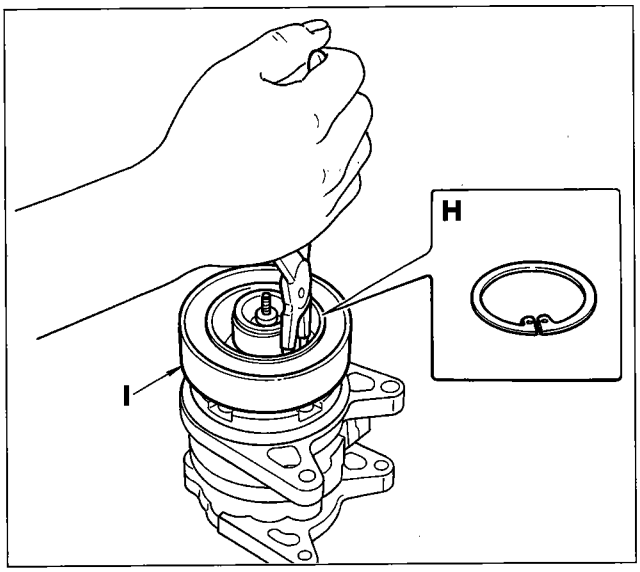

P4F027H02

Remove ring (H) retaining solenoid and solenoid (I)

Refitting

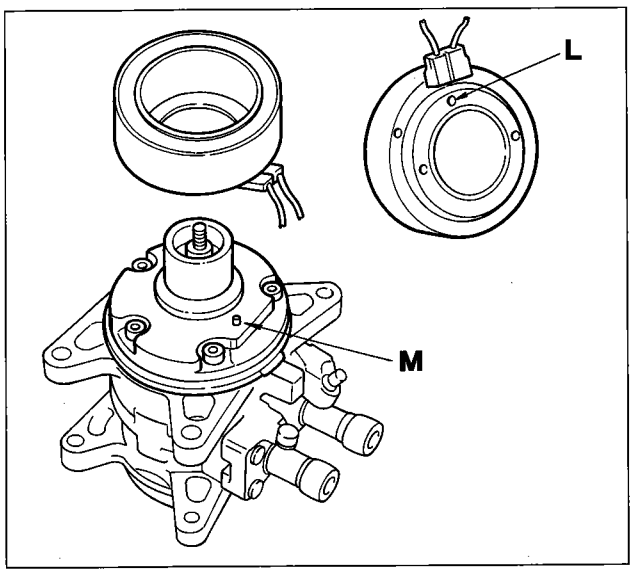

P4F027H03

Reassemble the components by reversing order of operations described for disassembly with particular attention to the following details:

Refit solenoid taking care to insert pin (M) properly in seat (L)

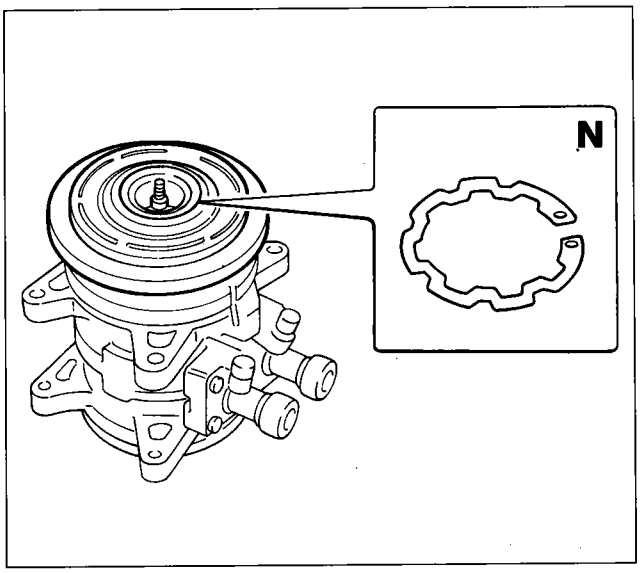

P4F027H04

Refit ring (N) retaining pulley with convex part facing upward

When fitting, replace all retaining rings removed previously

Adjusting clutch clearance

Clearance between hub and pulley must be 0.5 ± 0.15 mm.
Proceed as follows to check clutch clearance.

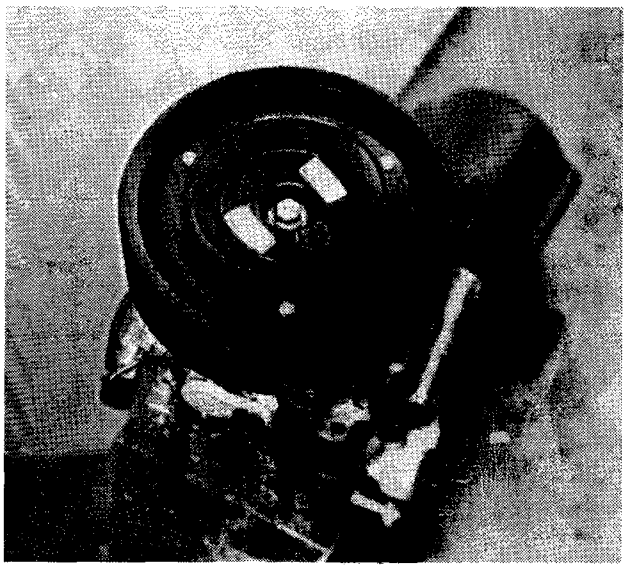

P4F028H01

Rest plate 1895655000 on hub surface.
Use a gauge to measure the gap between the plate and the lower part of the clutch (gap X).
Excite solenoid with a voltage of 12V and use gauge to measure the gap between the plate and the bottom part of the clutch (gap Y).
Clutch clearance is equal to: X - Y.

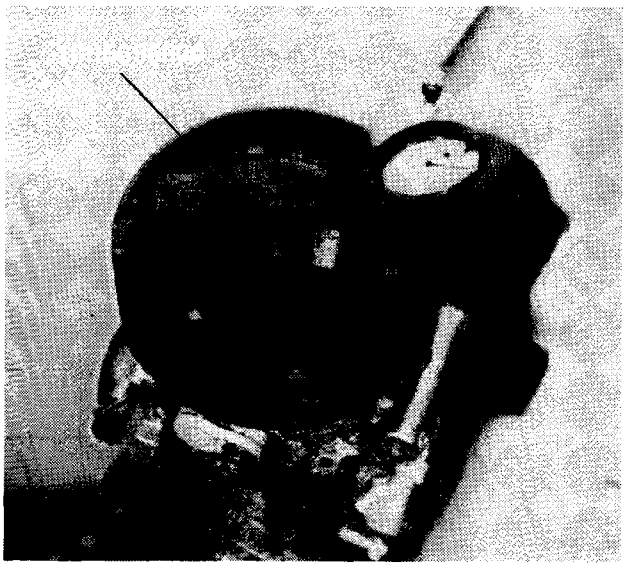

P4F028H02

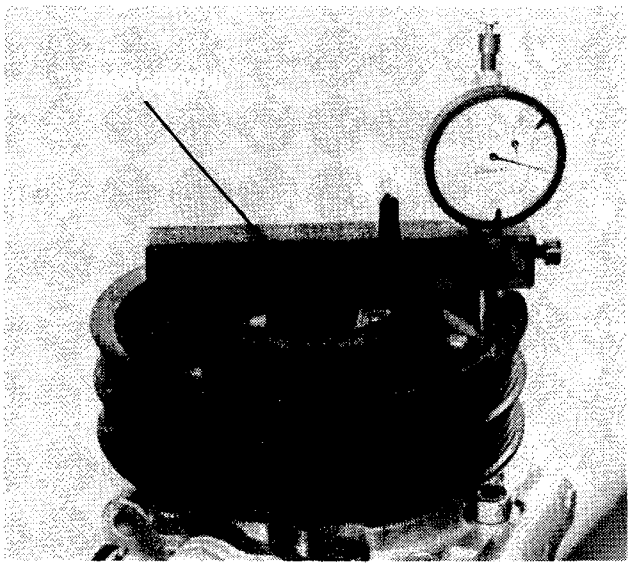

P4F028H03

If the measurement obtained is not as specified, add or remove shims between hub and compressor shaft.
For this purpose, shims are available in the following thicknesses: 0.10 - 0.30 - 0.50 mm.

After adjusting the clutch clearance, tighten the bolt retaining the assembly to the compressor shaft to a torque of: 10.8 - 16.2 Nm

HEATING/VENTILATION SYSTEM

In addition to the unit described previously, the air conditioning system differs from the heating system in the addition of various components specific to the air conditioning system, which are as follows:
- a variable output compressor (NIPPONDENSO TV 12SC - for all versions) fastened to the engine by brackets;
- a heat exchanging condenser fitted in front of the engine cooling radiator;
- a dehydrating filter located near the left side of the condenser;
- an evaporator, which acts as the second system heat exchanger and is located in the above assembly;
- an expansion valve fitted to the evaporator intake duct;
- various rigid pipes and hoses connecting the various system components;
- three stage pressure switch fitted to the dehydrating filter.

Two tubes are welded to the high and low pressure pipes. A needle valve applied to these is used to charge and discharge the system.

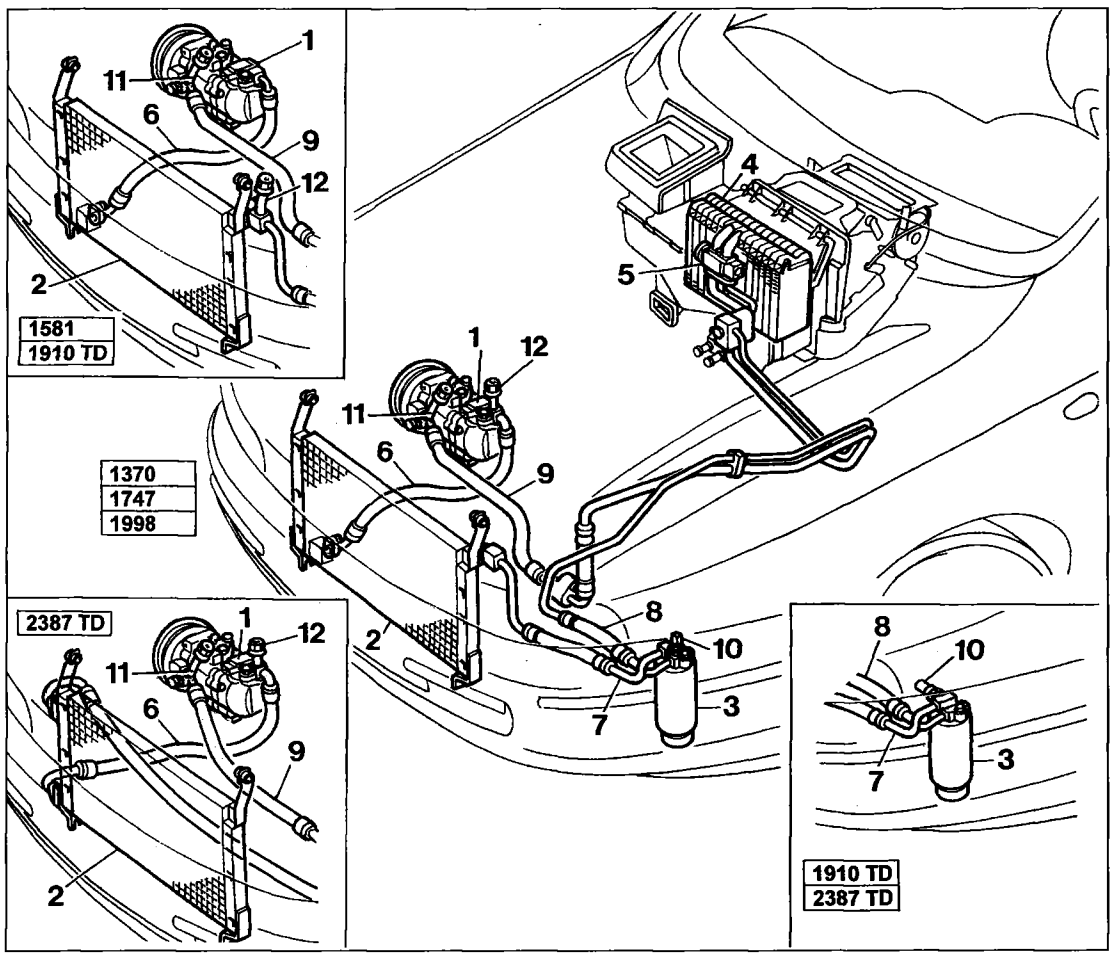

P4F16AH01

Location of air conditioning system components

1. Compressor
2. Condenser
3. Dehydrating filter
4. Evaporator
5. Expansion valve
6. Pipe between compressor and condenser
7. Pipe between condenser and dehydrating filter
8. Pipe between filter and evaporator
9. Pipe between evaporator and compressor
10. Three stage pressure switch
11. Needle valve for draining system (low pressure side)
12. Needle valve for charging and draining system (high pressure side)

Copyright Fiat Auto

50.

DRAINING AND RECHARGING THE SYSTEM

Only use the appropriate Cleaner 134 device.

Drainging the system and recovering the coolant

Observe the SAFETY REGULATIONS given previously. In particular, take care to observe the following precautions.

- *Any R 134a fluid which accidentally emerges from the air conditioning system or draining/recharging device may become toxic if it comes too close to naked flames or comes into contact with certain metals (e.g. magnesium or aluminium) in the form of fine or polyvalent particles. It is therefore advisable to keep away from naked flames and work in a ventilated are with the suction system active.*
- *Avoid the R 134a fluid coming into extended contact with the skin while it is evaporating because the low temperature (-26.5°C) at the end of the expansion stage may give rise to burns due to the intense cold. It is advisable to use gloves made out of leather or thick cloth.*
- *It is essential to protect the eyes from accidental contact with the coolant because excessive and instantaneous low tempature may lead to serious damage. Always use protective goggles.*
- *It is forbidden to discharge the fluid in the open air because this constitutes a danger to the environment. When draining R134a from the system, use only the equipment mentioned above. Instructions are given below.*

Recharging coolant

- *If used with due precautions, R134a fluid is harmless for people and vehicles. Because it is kept under pressure, it may undergo physical changes which could be damaging if not kept properly under control. It is therefore necessary to observe the following precautions with great care.*
- *The coolant is normally kept in metal canisters. Never expose the canisters to sunlight for a long period. The temperature increase will increase the pressure and the safety limit may be exceeded.*
- *During the winter months, it will probably be difficult to decant the metal canister at the charging station due to low pressure in the canister. In this case, before decanting, position the canister in a warm position at a temperature no greater than 35°C without ever using a naked flame to heat the canister.*
  Never leave the charging canister completely full for long periods. Never overturn the canister during decanting.
- *Before charging the system, add the quantity of fluid removed during draining to the compressor (see next para.): use only the type and quantity of oil indicated in "TECHNICAL DATA".*
- *Use only the proper equipment when recharging coolant R134a.*
- *Consult the technical specifications given in "TECHNICAI DATA" for the amount of R134a to be used for recharging.*

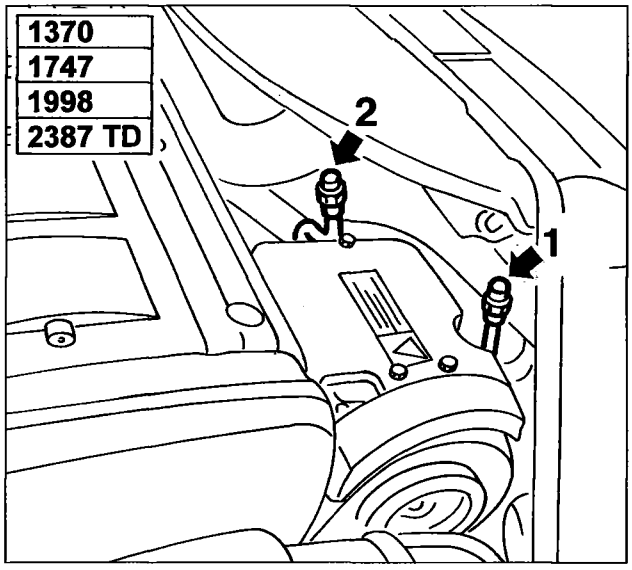

P4F18AH01

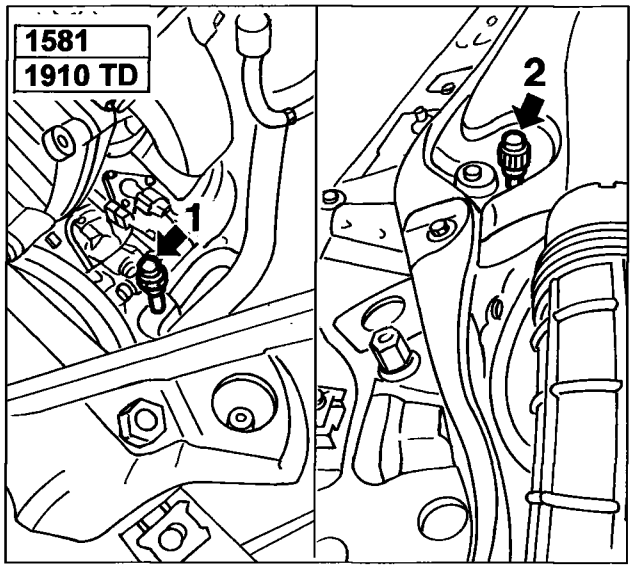

P4F18AH02

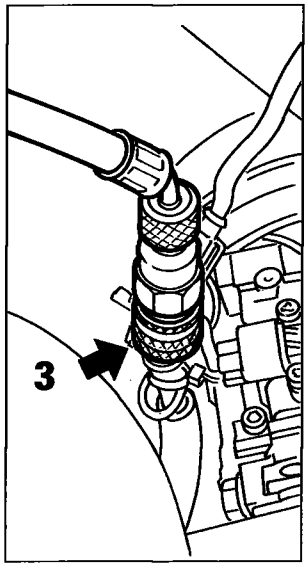

P4F18AH03

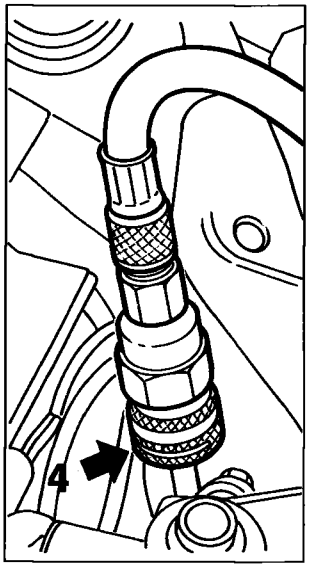

P4F18AH04

CONNECTING THE SYSTEM TO CLEANER 134 DEVICE

To facilitate drainage of coolant from the air conditioning system, firstly allow the air conditioning system and car engine to run for 10 - 15 minutes.

Proceed as follows to connect the vehicle air conditioning sytem to the ICF Cleaner 134 device:

1. Unscrew the plug from the needle valve plug (low pressure side) fitted to the end of a pipe welded to the pipe connecting the evaporator to the compressor.

2. Unscrew the plug from the needle valve (high pressure side) at the end of a pipe which forms an integral part of the line connecting the condenser to the dehydrating filter.

3.4. Fit the quick-release fitting at the end of the blue (low pressure end) and red (high pressure end) connection hoses of the Cleaner 134 device to the respective needle valves. Then proceed as instructed in the work station manuals.

NOTE *For greater safety, the device pipe quick-release fittings and needle valves are of different diameters. The low pressure side is smallaer than the high pressure side. Before fitting the quick-release fittings to the needle valves, move the knurled lock-ring indicated by the arrow upwards.*

50.

TOPPING UP COMPRESSOR FLUID LEVEL

- *The compressor fluid level should be topped up only in the case of drainage/recharging, or if a significant amount of lubricant oil has been lost due to damage to or disconnection of air conditioning system components.*
- *The fluid is higly hygroscopic: avoid leaving containers open.*
- *When working on the engine bay, always plug system line holes. Never leave components disconnected for longer than necessary.*
- *If an accident causes the system to be exposed to the air for a period longer than* ***six hours****. It is not sufficient to simply top up the fluid level. Instead the compressor lubricant fluid must be changed completely as described below:*
- *To top up the fluid level, only use new fluid of the type indicated in the "TECHNICAL DATA" section.*

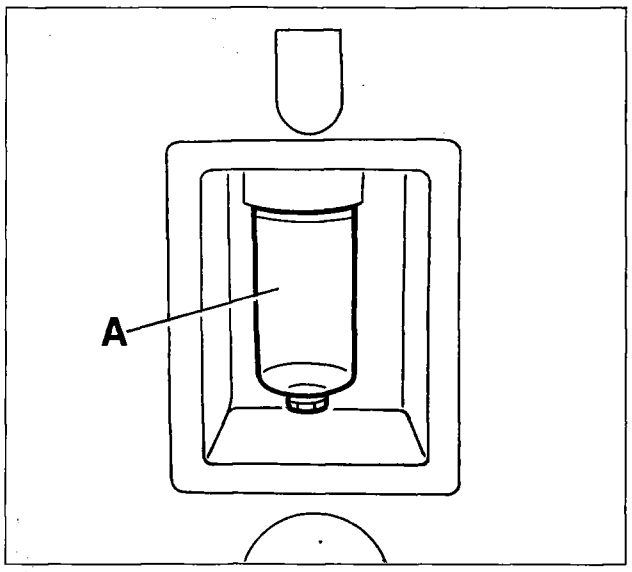

P4F19AH01

Draining the system using the CLEANER device

When draining the system using the above device, fluid from the compressor is collected in a container (A) located on the device itself. Remove the fluid collected by unscrewing the container; add the amount shown in the container to the system before recharging the coolant.

Before measuring the quantity of fluid to be topped up, leave container (A) in the open air in order to allow emulsified gas to separate out .

Replacing components

In the case of service operations which require replacement of certain system components, add the **recommended amount** of fluid shown in the table for each part replaced.
If the **compressor** is replaced, new parts are supplied containing the specified quantity of fluid. For this reason, before fitting to the car, remove a quantity of fluid corresponding to the quantity left in the system. Proceed as indicated in the next point to do this

PART	Q.TY
Dehydrating filter	15 cm^3
Piping	5 cm^3/m
Evaporator	40 cm^3
Condenser	40 cm^3

Quick system drainage (less than 5 minutes) in the case of accidental failure

Under these circumstances, it is not possible to calculate the exact amount of fluid lost because high fluid pressures can cause fluid to be drawn out. Add **in all cases 50 cm^3** of fluid.

Compressor replacement

New compressors are supplied pressurised with nitrogen to preventthe entry of moisture and impurities. When fitting, it is therefore necessary to remove the input and output plugs slowly and with the compressor positioned as shown in the figure below (with the cover facing uppermost).

- Remove the oil separator device (A) fastened near the outlet fitting of the compressor to be replaced.
- Pour the oil contained in the compressor into a graduated burette (C) taking care to drain the contents well.
- Remove the oil separator device (A) from the new compressor and pour the quantity of oil it contains into graduatored burette (D), taking care to drain the contents well.
- Remove the excess oil quantity (E) corresponding to the difference between the quantity of oil contained in the burette (C) and burette (D) (E=D-C).

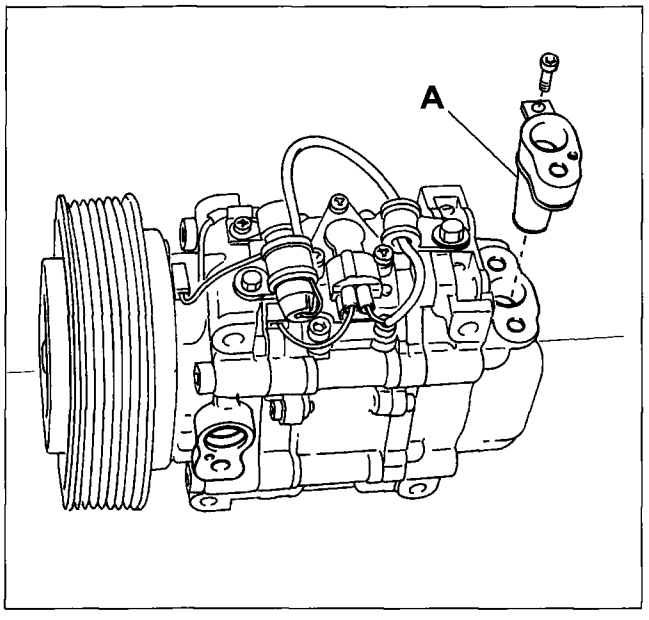

P4F20AH01

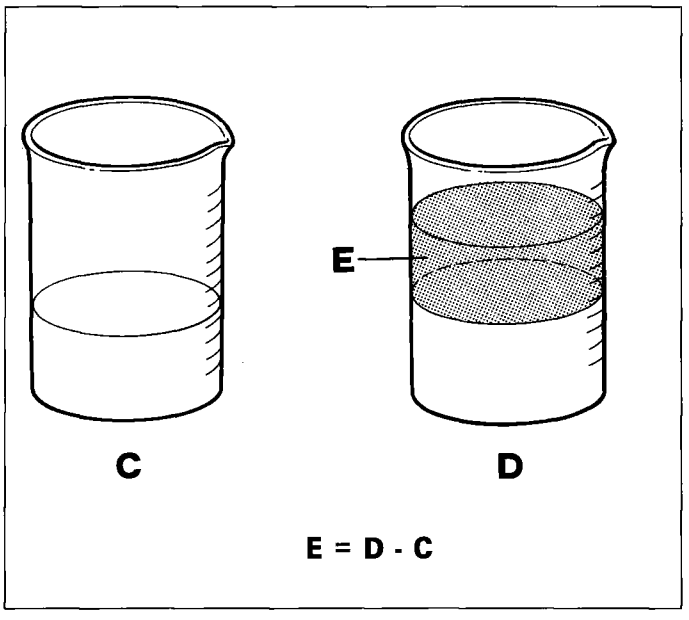

P4F20AH02

WASHING THE SYSTEM

- *In the case of damage or breakage to the compressor or other system components, it is necessary to clean the system thoroughly.*
- *During operations when the pipes are left open and exposed to the air for more than **six hours**, it is necessary to wash the system to eliminate moisture.*

Proceed as follows:
- If the compressor has suffered damage which may have led to the presence of metal parts in the pipes, it is first necessary to clean the compressor connection pipes with compressed air.
- Connect the system to the cleaner device mentioned previously.
- Add a quantity of R134a equal to the amount indicated for recharging (see "Technical Data") to the high pressure side - red cock.
- Then recover frm the low pressure side - blue cock.
- Add the same amount of R134a for the second time and recover as described previously.
- After washing, replace the **dehydrating filter.**
- Carry out the system drainage and recharging operations as described previously.

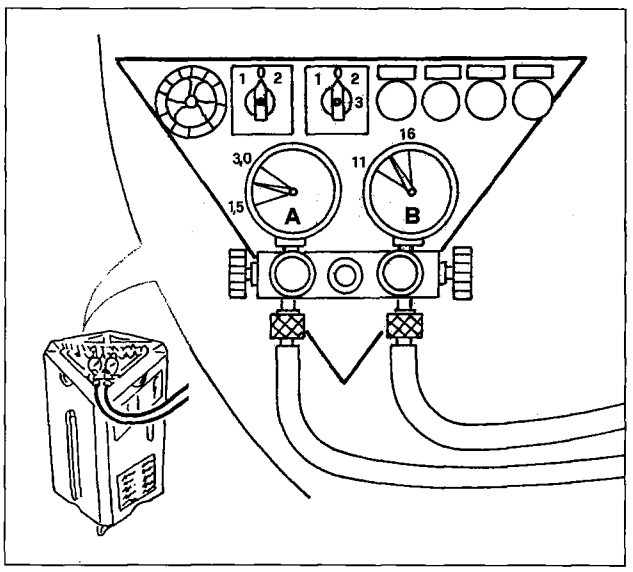

P4F21AH01

(A) low pressure circuit pressure gauge
(B) high pressure circuit pressure gauge

Checking system pressure

Pressure is checked from the recharging station with the engine running (speed about 1500 rpm) and outdoor temperature 20-28°C, after connecting the pipes as shown previously. Under these conditions, the pressure gauges should indicate:

- **low pressure circuit (pressure gauge A): 1.5-3.0 bar**
- **high pressure circuit (pressure gauge B): 11-16 bar**

NOTE *The radiator/condenser cooling fan comes on at a high pressure circuit pressure of 15-16 bar*

SERVICE OPERATIONS

The procedures described for system components fitted in the engine bay refer to the 1747 version and may vary slightly for other versions.

NOTE *Seal disconnected pipe ends with plugs and use only green o-rings which are resistant to R134a coolant if sealing rings require replacement.*

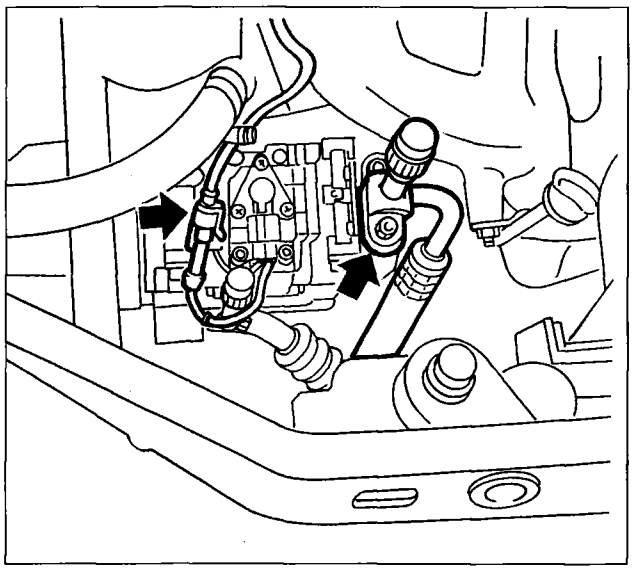

P4F035H01

COMPRESSOR

Removing

Before removal, position the vehicle on a stand and then drain the air conditioning system

After disconnecting the battery, carry out the following operations in order:

- disconnect connector and undo electrical wiring;
- unscrew screw indicated and disconnect compressor delivery duct wiring;

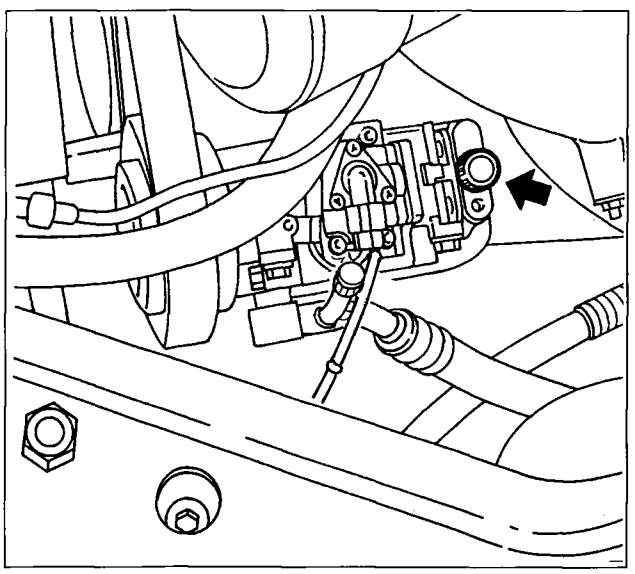

P4F035H02

seal pipe and compressor duct ends using sealing plugs to prevent moisture entering the system.

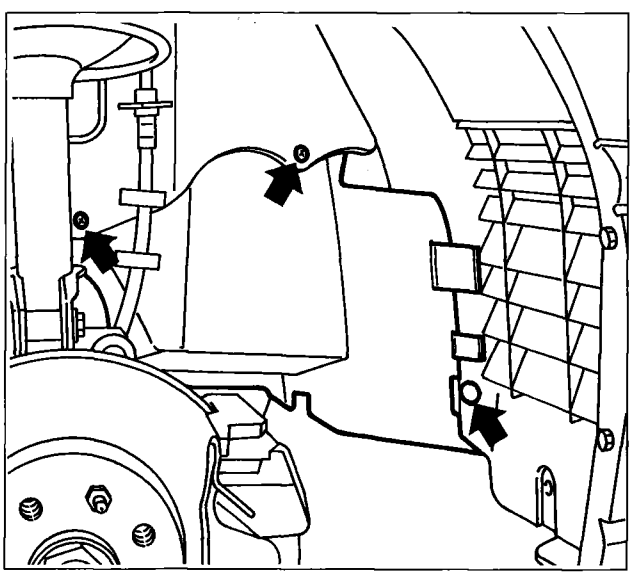

P4F035H03

- Raise the vehicle and remove the right front wheel;
- remove the clip and unscrew bolts shown in figure, which retain wheel arch guard to body;

50.

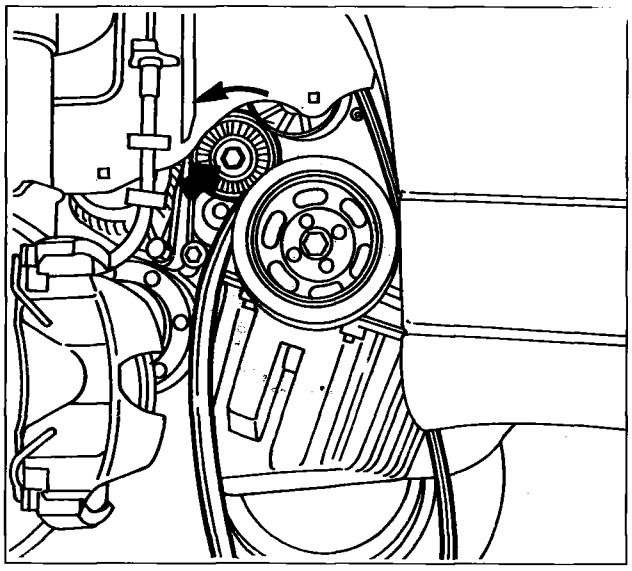

P4F036H01

- use key fastened at point indicated in figure to move fixed pulley to the left and release the belt from the compressor;

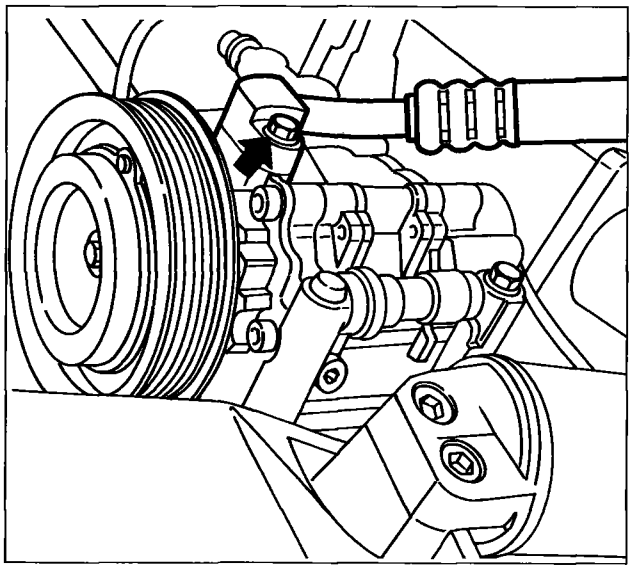

P4F036H02

- unscrew the screw shown in the figure and disconnect line from the compressor intake duct;

seal ends of pipe and compressor duct using sealing plugs;

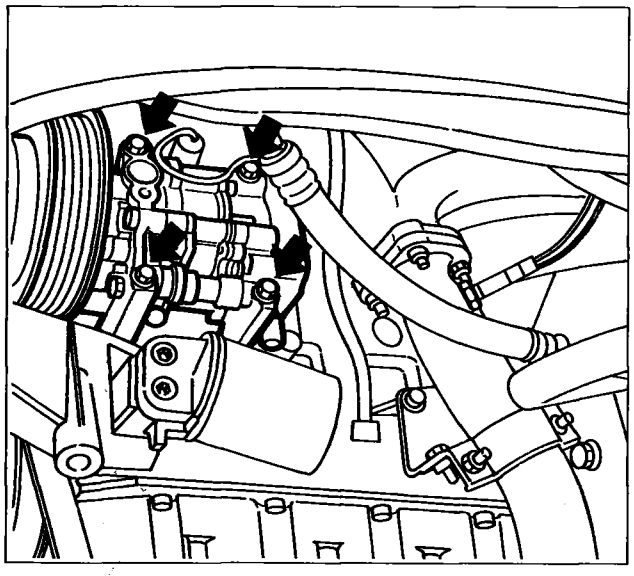

P4F036H03

- unscrew bolts, indicated in figure, and remove compressor.

Refitting

Reverse order of removal operations to refit

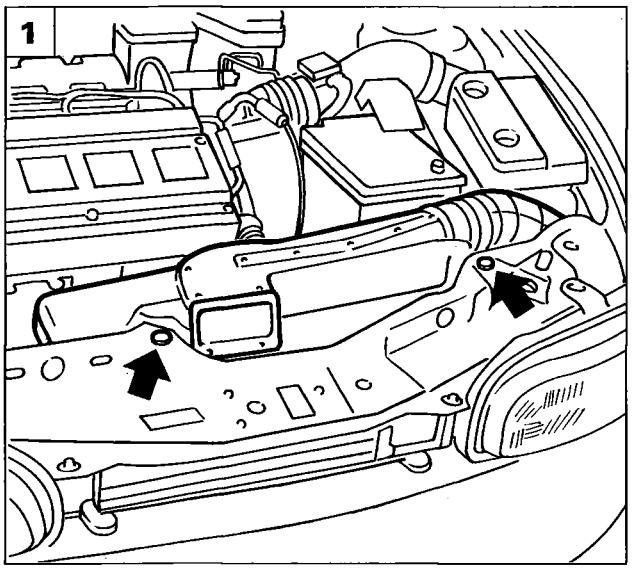

P4F037H01

CONDENSER

Removing

Before removing, arrange the vehicle on a lift, then drain the air conditioning system and the cooling system.

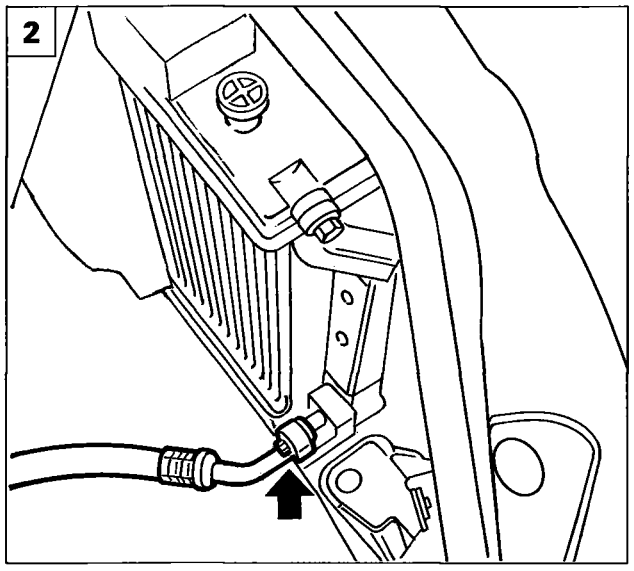

P4F037H02

1. Unscrew the bolts indicated and remove the air shroud.
2. Unscrew the screw indicated and release line connecting compressor to condenser.
3. Unscrew the screw indicated and remove line connecting condenser to dehydrating filter.

Seal ends of pipes disconnected from condenser using sealing plugs to prevent moisture entering the system.

4. Unscrew bolts indicated in figure which retain engine cooling radiator to body.

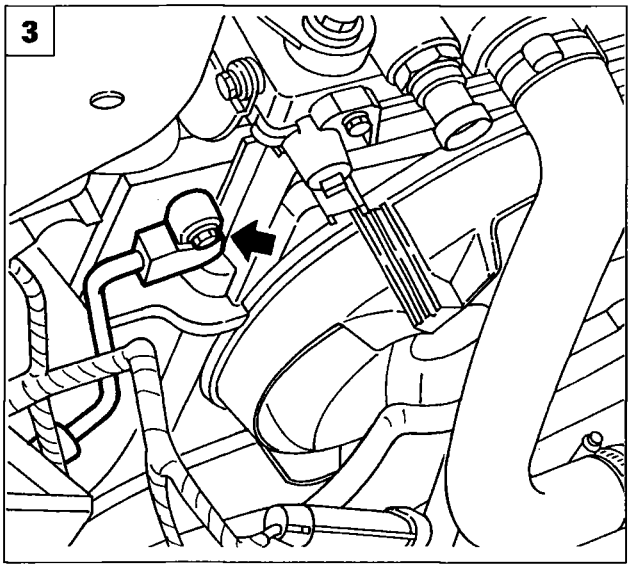

P4F037H03

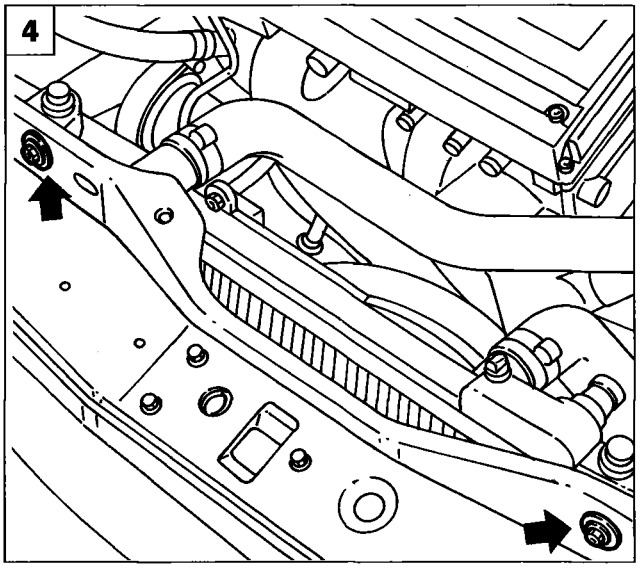

P4F037H04

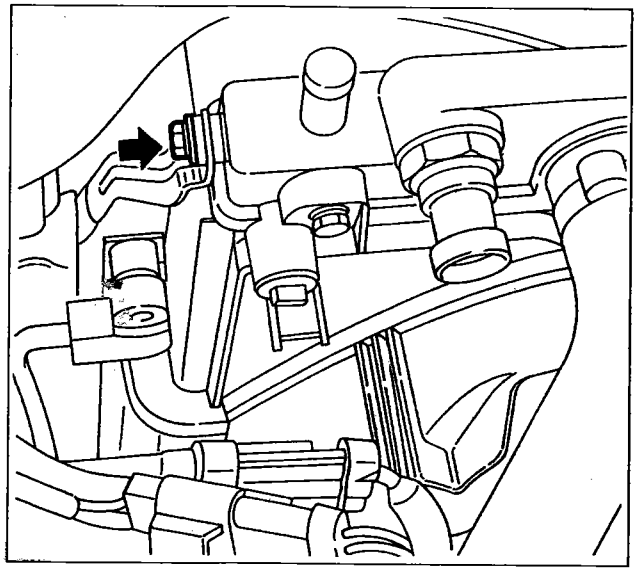

P4F038H01

- Unscrew the screw indicated which connects top of condenser to engine coolant radiator.

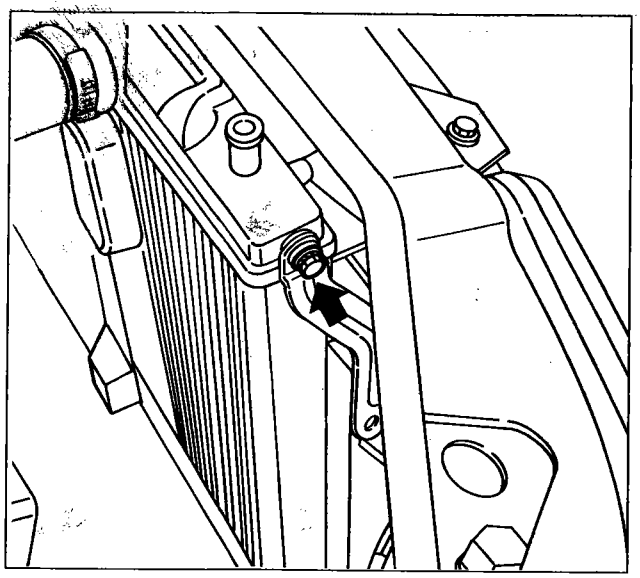

P4F038H02

- Unscrew the screw indicated, then raise the vehicle.

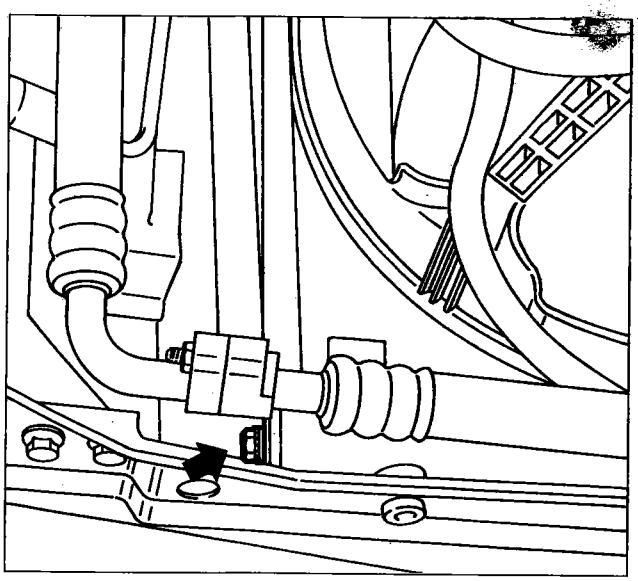

P4F038H03

- Loosen the bolt which connects bottom of condenser to engine coolant radiator.

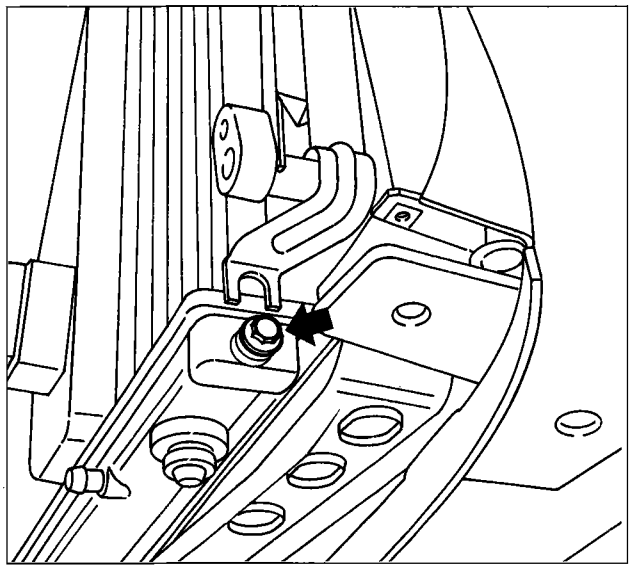

P4F039H01

- Loosen bolt indicated in figure, then lower vehicle.

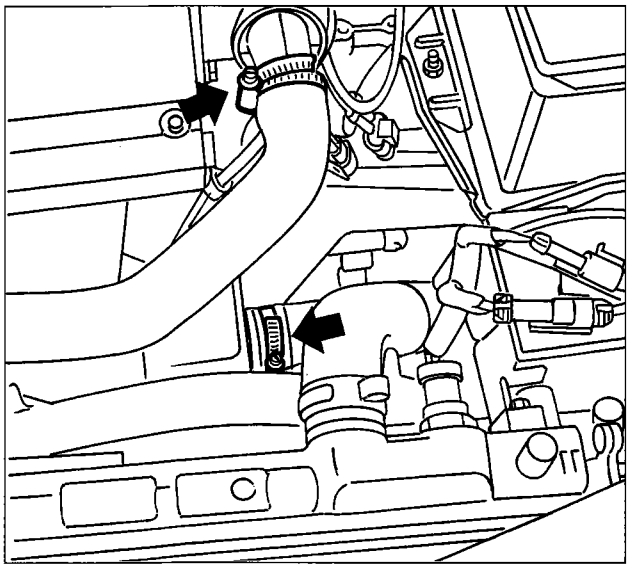

P4F039H02

- Loosen clips indicated, then disconnect both coolant output and inlet lines.
- Disconnect radiator-fan assembly from engine with due caution.
  Remove condenser from its seat.

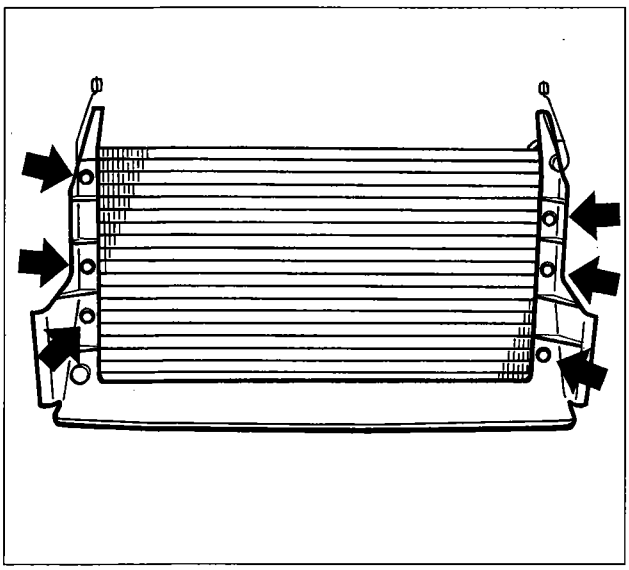

P4F039H03

- Unscrew bolts indicated in figure and separate guard from condenser.

Refitting

Reverse order of removal operations to refit, taking care to check that finned condenser surfaces are not clogged with dirt or deformed.

50.

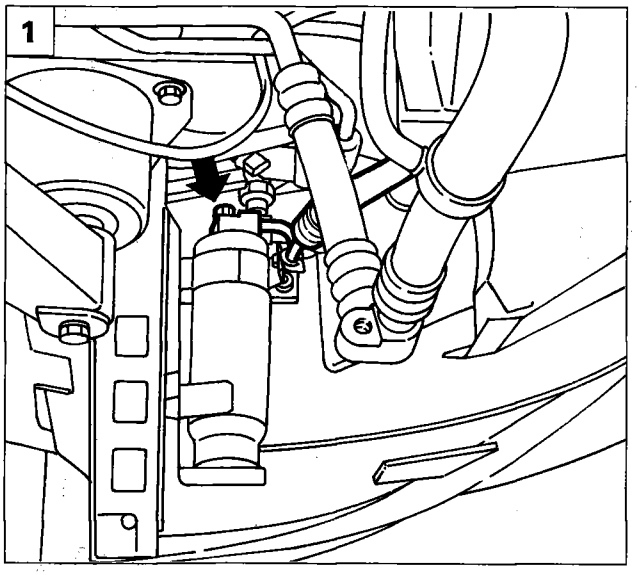

P4F040H01

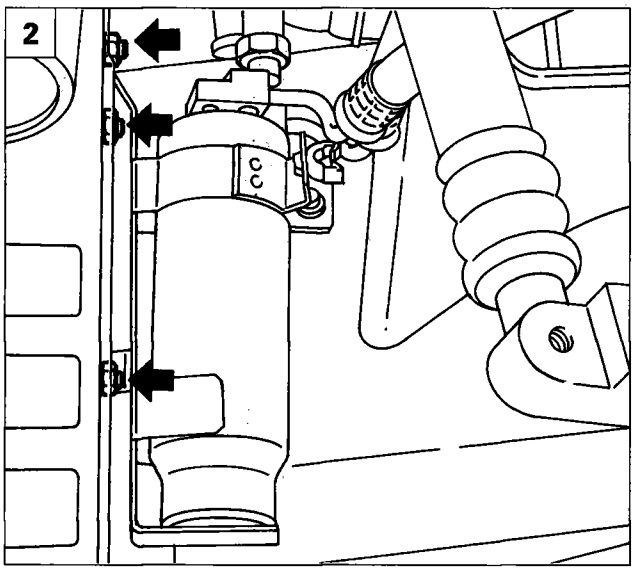

P4F040H02

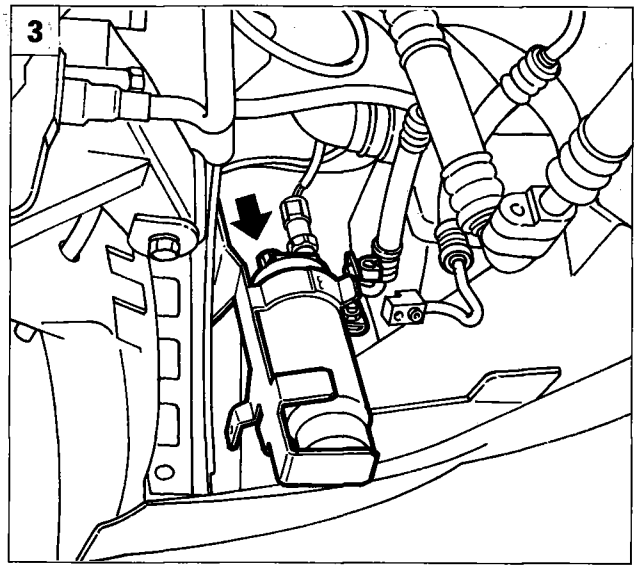

P4F040H03

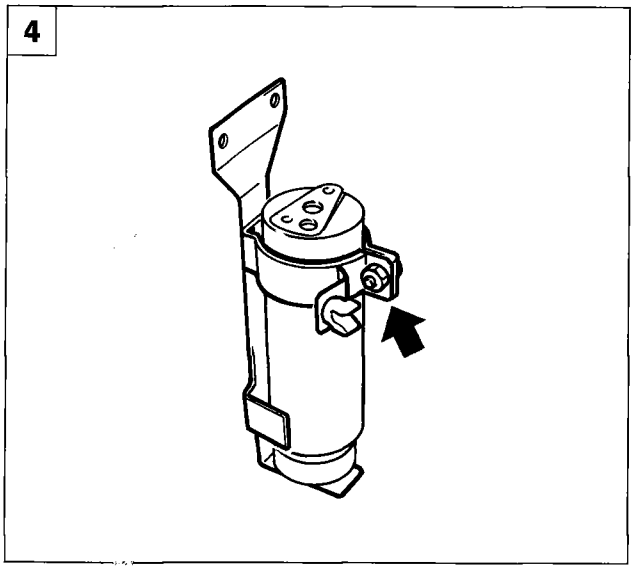

P4F040H04

REMOVING - REFITTING DEHYDRATING FILTER

Before removing, position the vehicle on a stand and drain the air conditioning system:

1. Raise the vehicle.
   Unscrew screw retaining delivery line to dehydrating filter.
2. Undo nuts retaining dehydrating filter mount to body.
3. Disconnect three-stage pressure switch connector and unscrew outlet line retaining screw before removing dehydrating filter.
4. Separate dehydrating filter from mount by loosening retaining clip nut.

Reverse order of removal operations to refit, making sure to check pipe fittings are properly aligned with dehydrating filter ducts before tightening nut shown in figure 4.

NOTE *To prevent the dehydrating filter absorbing too much moisture from the environment, which could impair its operation, it is advisable to leave no more than 15 minutes from the time of connecting to system to filter installation. If this is not possible, seal filter inlet and outlet lines or free ends of connected hoses with watertight plugs.*

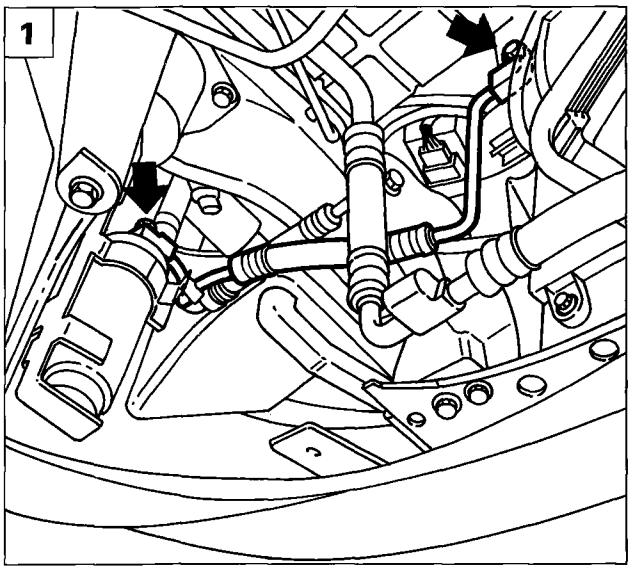

P4F041H01

LINES CONNECTING HEATING/VENTILATION SYSTEM COMPONENTS

Before removing-refitting, drain air conditioning system.

Removing/refitting line connecting condenser and dehydrating filter

1. Unscrew bolts indicated in figure.

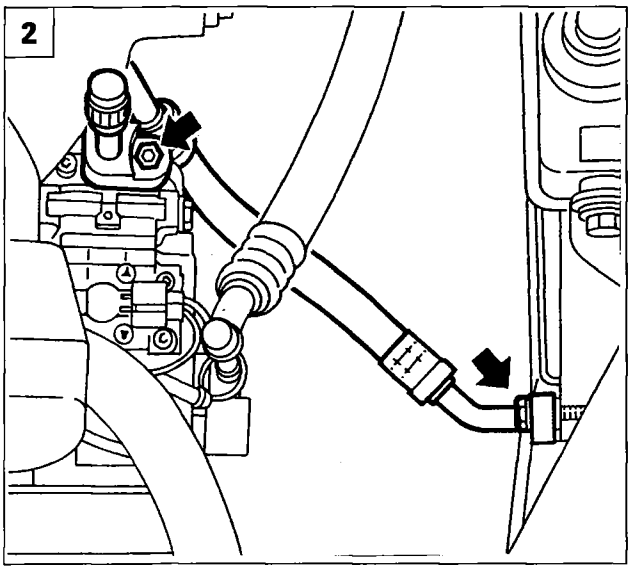

P4F041H02

Removing/refitting line connecting compressor and condenser

2. Unscrew bolts indicated in figure.

Removing/refitting line connecting compressor and evaporator

3. Position vehicle on lift, then unscrew screw retaining return line to compressor.

4. Remove first pipe section by unscrewing the nut indicated in the figure.

NOTE *When removing the second pipe section, simultaneously remove the pipe connecting the dehydrating filter to the evaporator (see next page).*

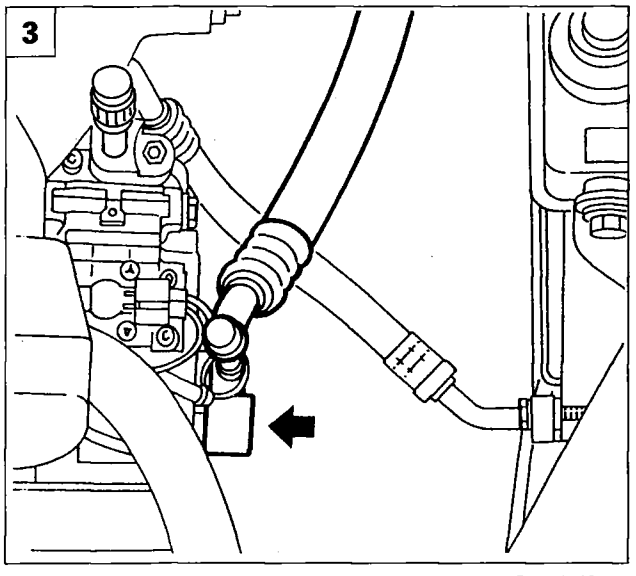

P4F041H03

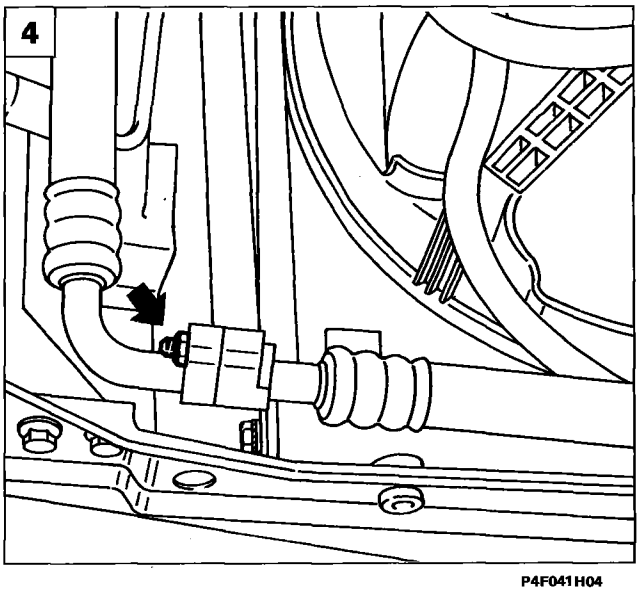

P4F041H04

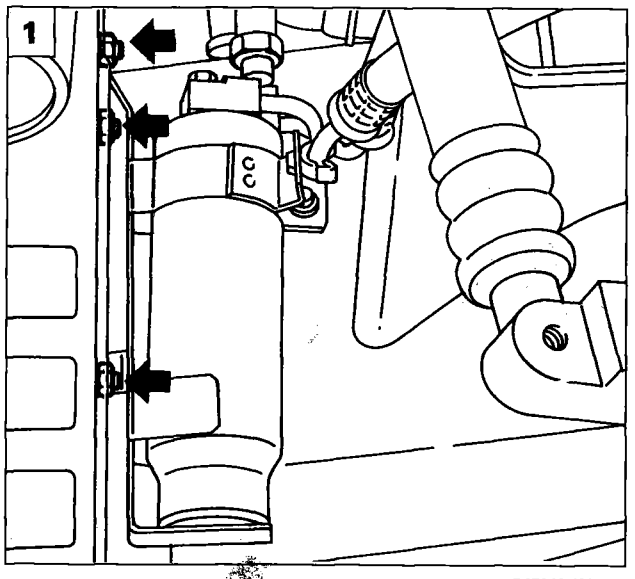

P4F042H01

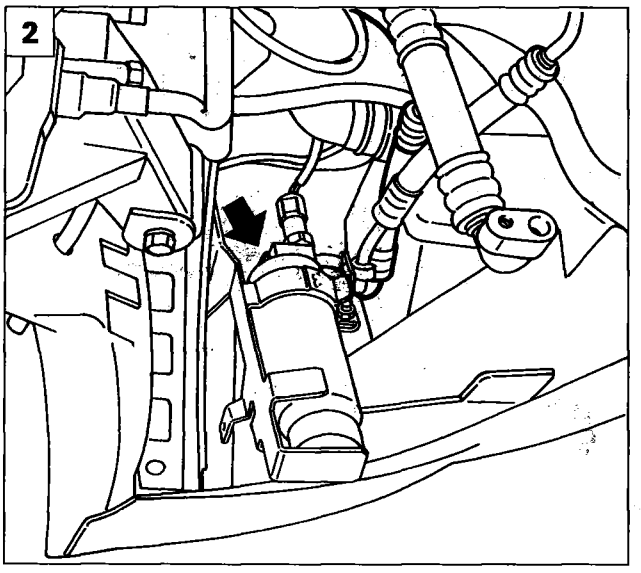

P4F042H02

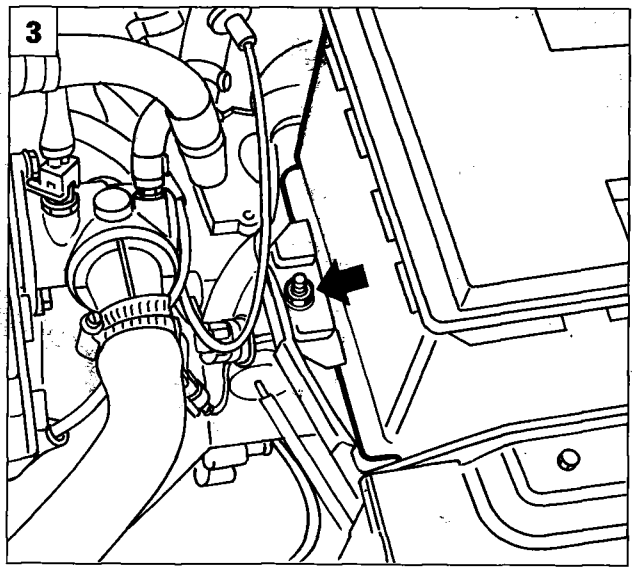

P4F042H03

Removing/refitting line connecting dehydrating filter to evaporator

1. Raise the vehicle, then unscrew nuts indicated in figure and move dehydrating filter downward.
2. Unscrew screw retaining delivery line to dehydrating filter.
3. Lower the vehicle, then unscrew nut retaining retaining plate and remove the battery.
4. Unscrew the screw shown in the figure and remove the fuse box cover.
5. Move the fuse box casing out of the way after unscrewing nuts indicated in figure.

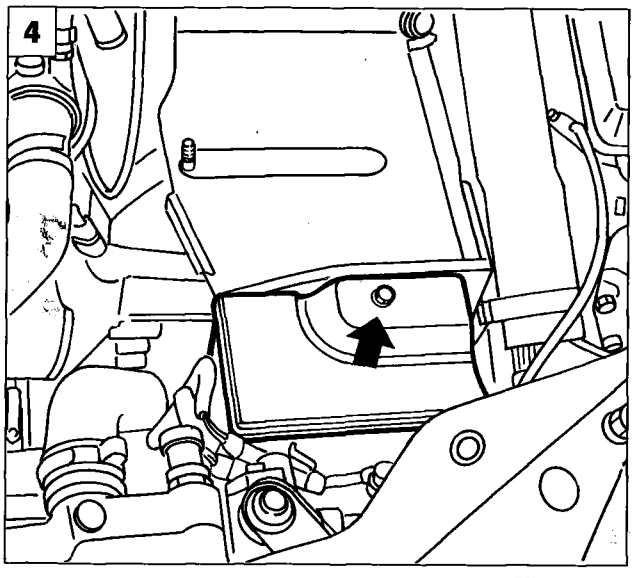

P4F042H04

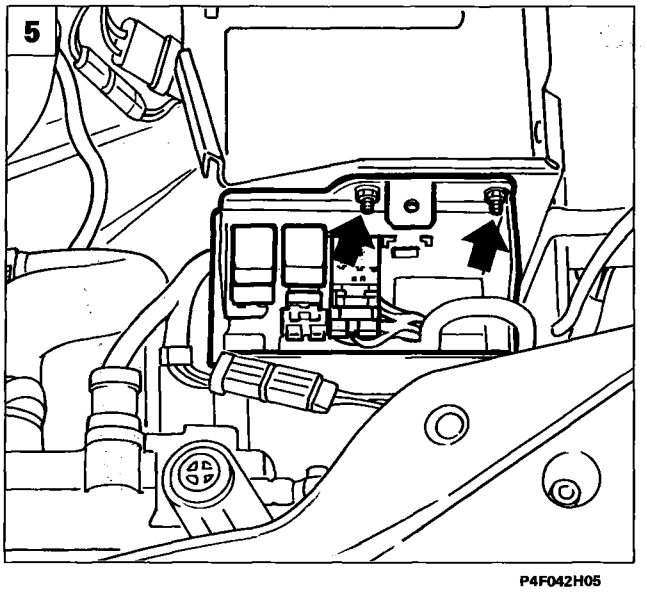

P4F042H05

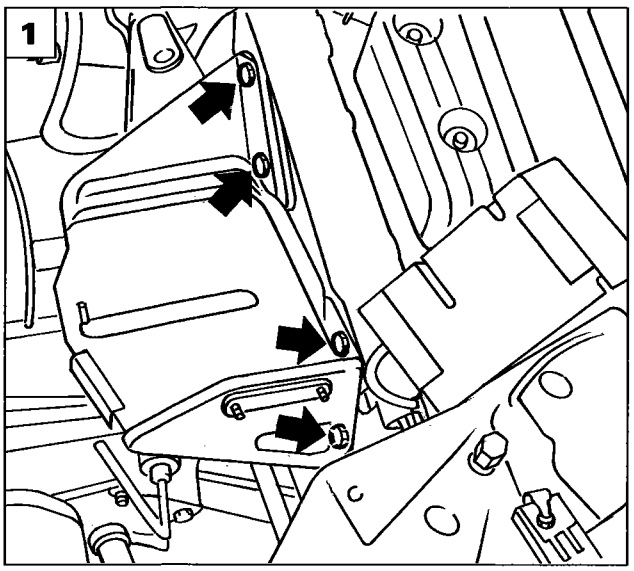

P4F043H01

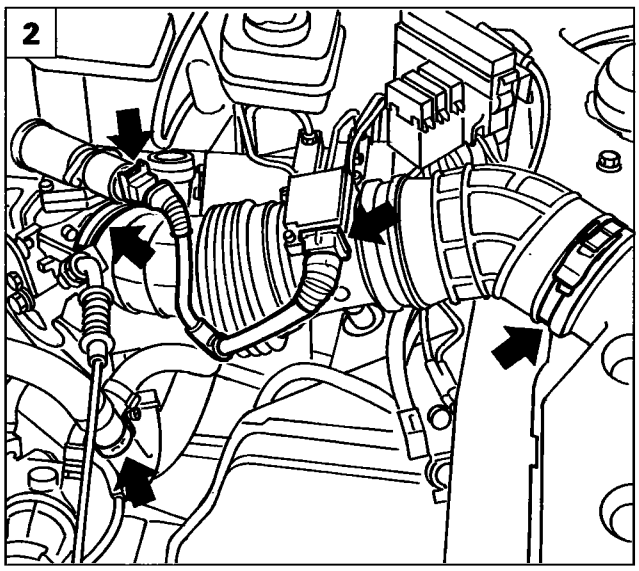

P4F043H02

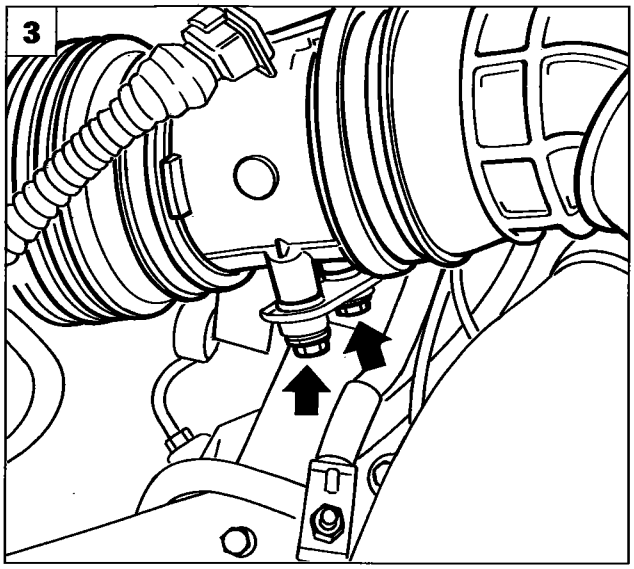

P4F043H03

1. Unscrew the screws indicated in the figure and remove the battery mount.
2. Disconnect the connectors and loosen retaining clips shown in figure.
3. Unscrew the bolts indicated and removre air duct.
4. Disconnect lines from retaining plate.
5. Unscrew screws retaining power steering fluid reservoir to body and move out of the way.

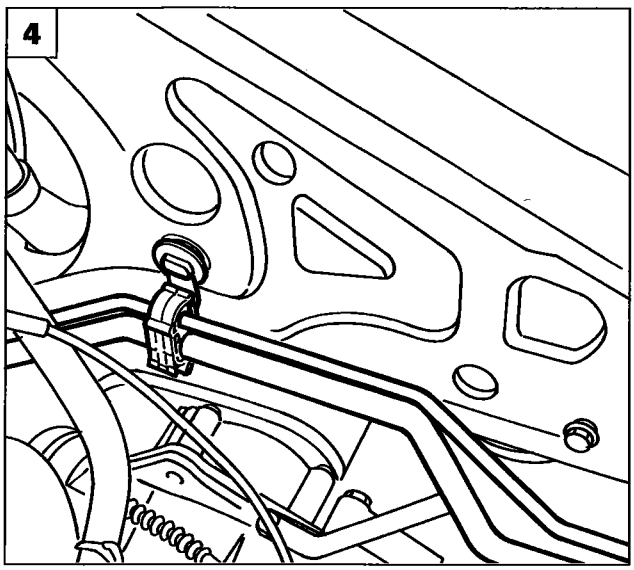

P4F043H04

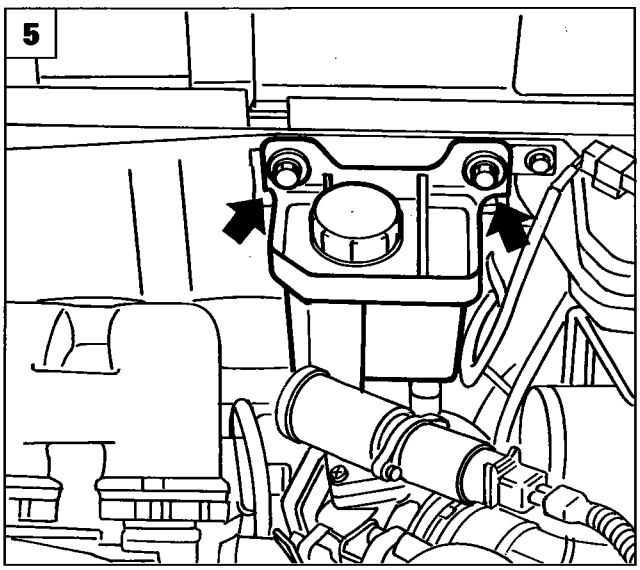

P4F043H05

Copyright Fiat Auto

50.

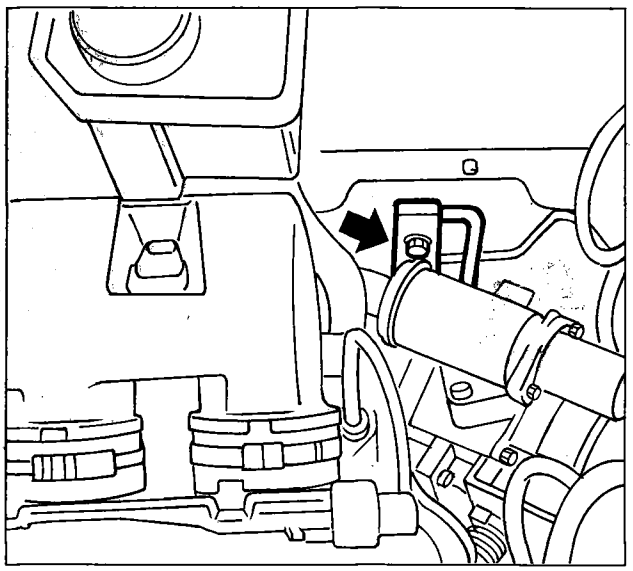

P4F044H01

- Remove any other parts which may get in the way of pipe removal.
- Unscrew the screw indicated and disconnect the lines from the evaporator intake fittings
- Recover the pipes

NOTE *Reverse order of removal operations to refit.*

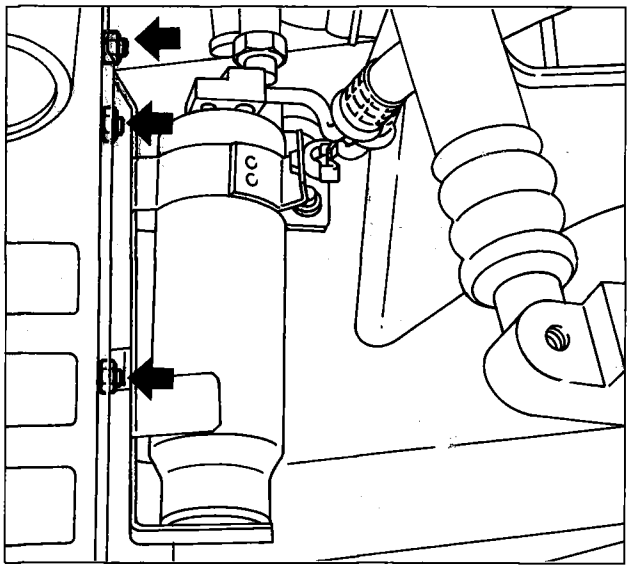

P4F040H02

THREE STAGE PRESSURE SWITCH

Before replacing the pressure switch, position car on lift and raise.

- Unscrew bolts shown in figure, then move dehydrating filter downward.

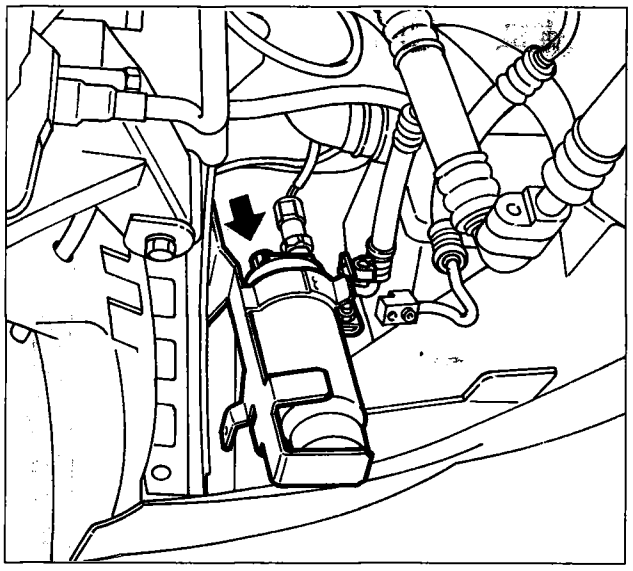

P4F040H03

- Disconnect connector indicated, unscrew pressure switch and remove.

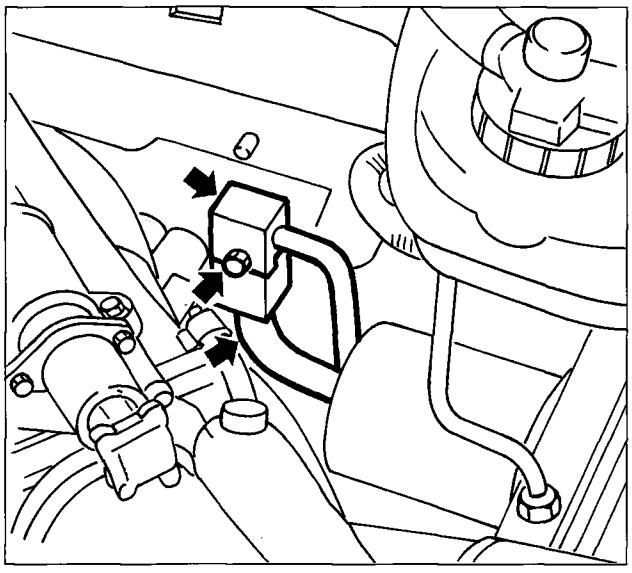

P4F045H01

SHROUD/DISRIBUTOR UNIT

Removing

Before removal, position the vehicle on a stand and then drain the air conditioning system and engine cooling system.

- Working from the engine bay, remove any parts preventing access to the central rear part (See Group 10 - Removal and refitting engines).
- Unscrew screw and disconnect fitting of pipes leading to evaporator.

Seal the ends of the pipes disconnected from the evaporator with sealing plugs to prevent moisture entering the system.

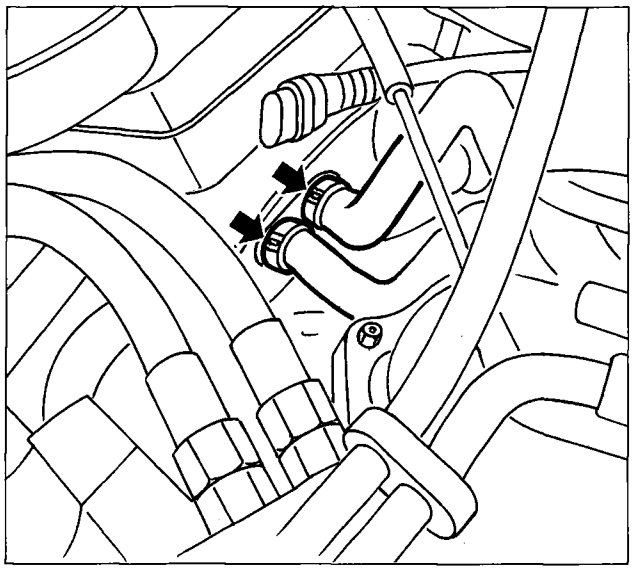

P4F045H02

- Loosen the two clips shown by disconecting the rubber pipes from the heater radiator metal fitting.

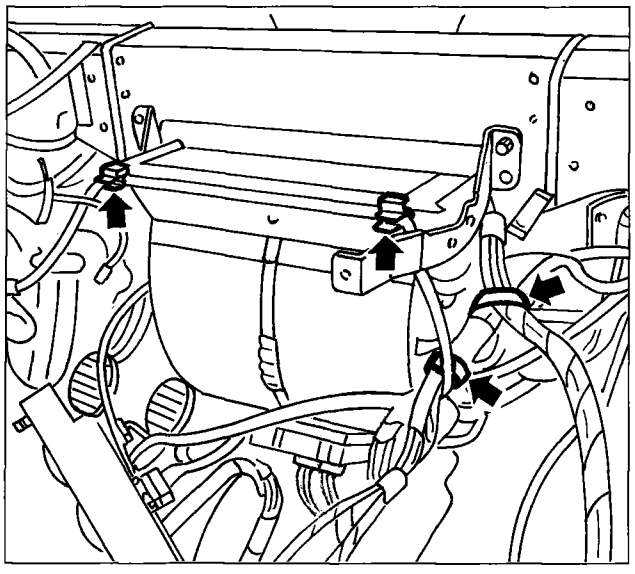

P4F045H03

- Working from inside the car, remove the facia trim and tunnel cover trim (see Group 70).
- Disconnect the Airbag lead (coloured yellow) from the retainers and clips shown. Disconnect the other facia leads from the shroud/distributor assembly.

50.

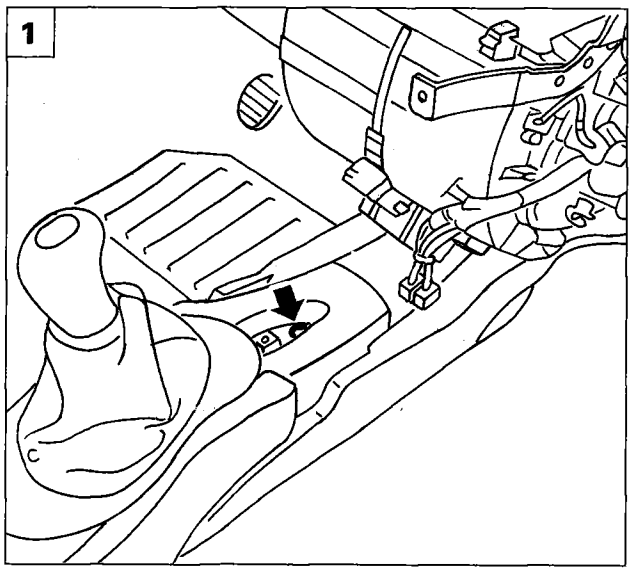

P4F046H01

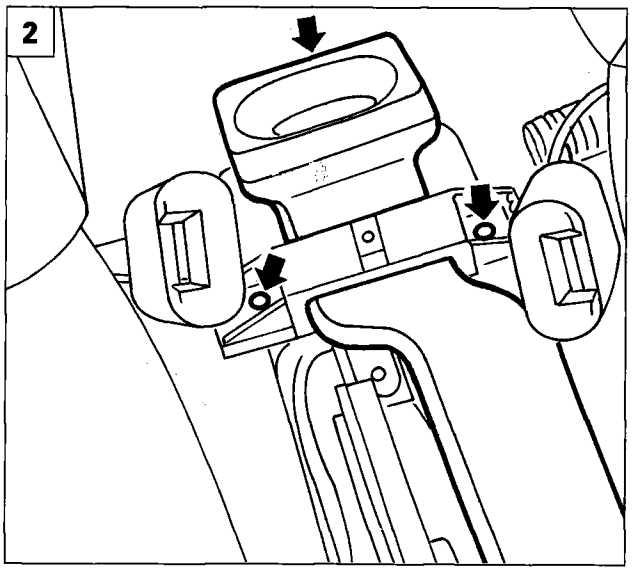

P4F046H02

1. Unscrew the central air duct bolt indicated.
2. Unscrew the central air duct retaining bolts indicated and remove.
3. Unscrew the bolts indicated and remove the side air ducts.
4. Unscrew the lower air duct from outlet (A) and remove from the vehicle.

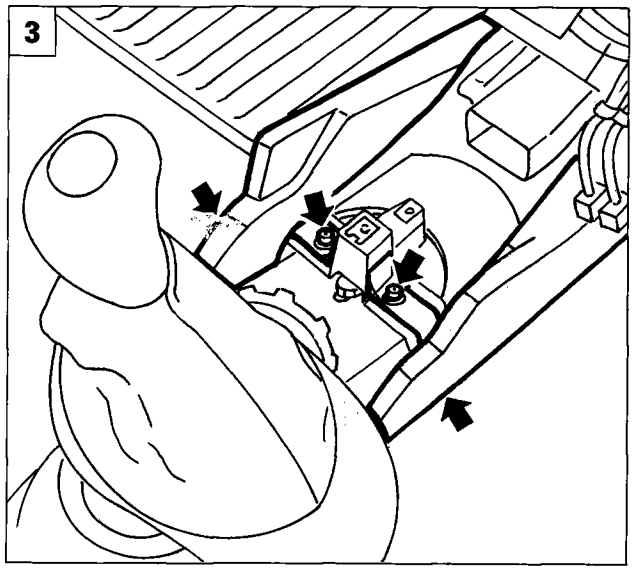

P4F046H03

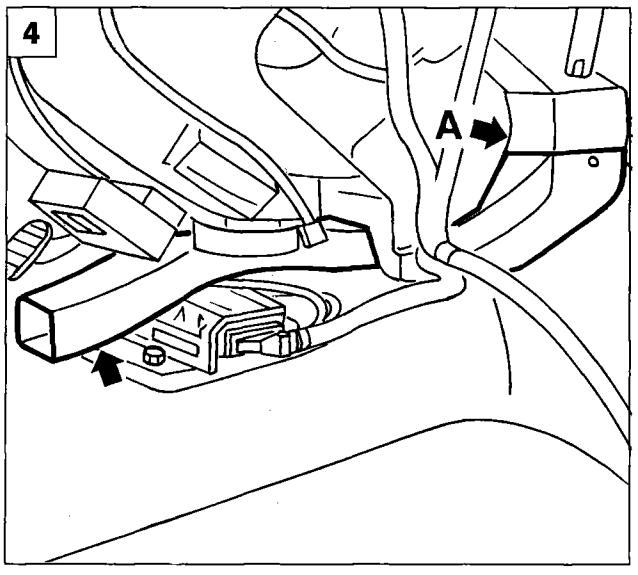

P4F046H04

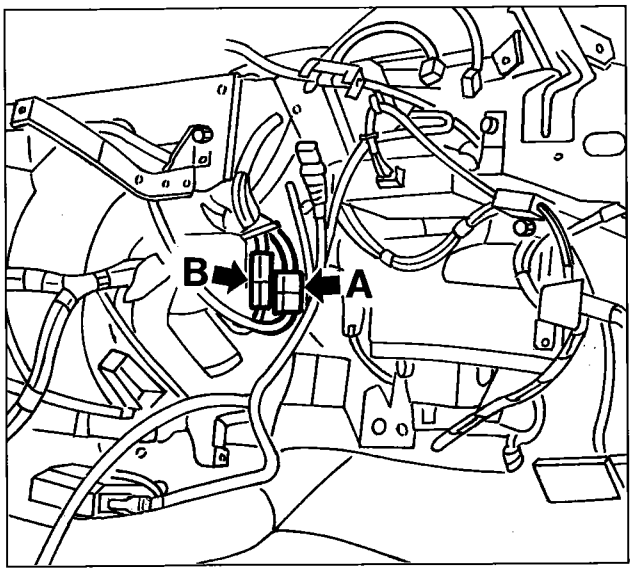

P4F047H01

- Disconnect electrical connections (A) and (B)

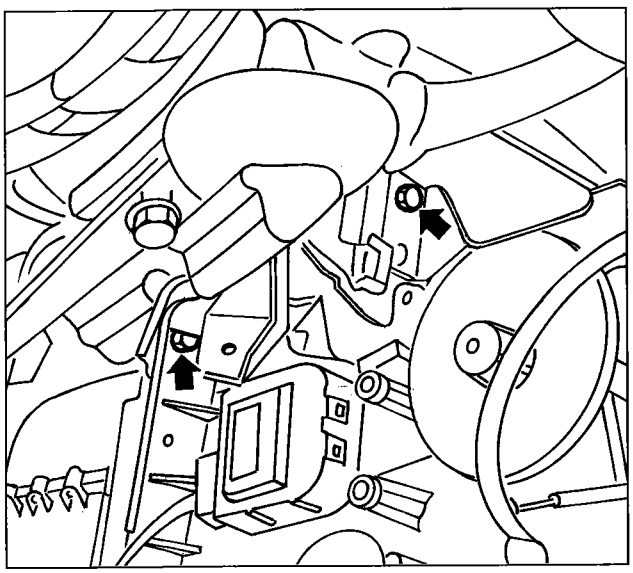

P4F047H02

- Unscrew the bolts indicated retaining left side of unit

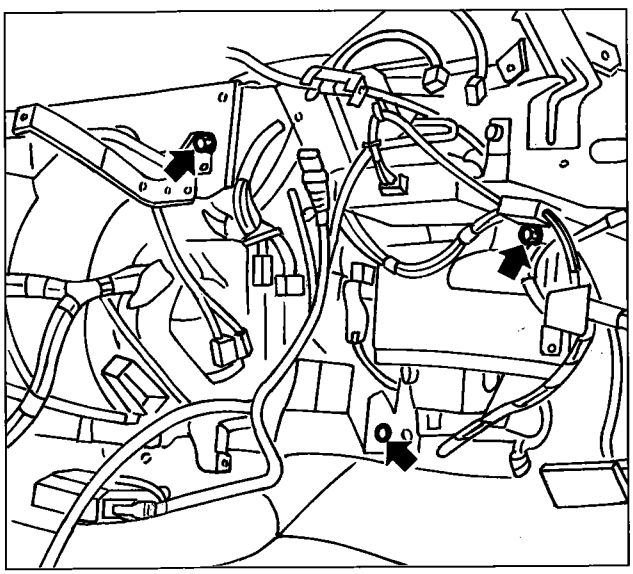

P4F047H03

- Unscrew the bolts indicated retaining right side of unit, then remove the unit.

Refitting

Reverse order of removal operations to refit.

50.

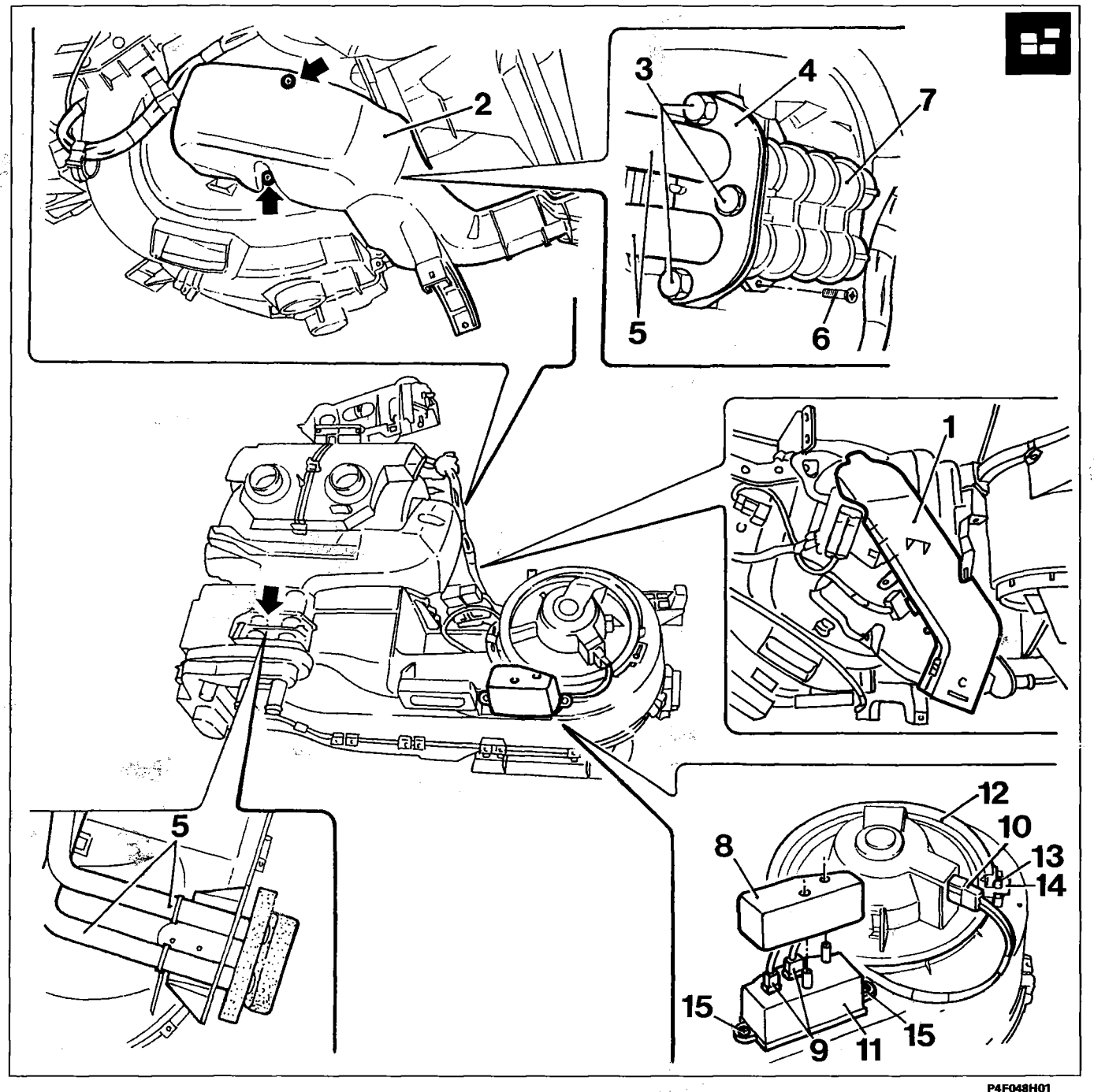

P4F048H01

Disassembly

Carry out the following operations:

- unscrew the screw indicated and remove the rear seat air fitting (1);
- unscrew the arrowed bolts, which retain heater guard (2) and remove;
- unscrew the three bolts (3). Take care not to lose the nuts fitted in the appropriate housings;
- remove plate (4) and disconnect the two metal pipes (5) from the heater radiator. Release pipes from assembly;
- unscrew screw (6) and recover the heater radiator (7);
- remove protection (8);
- disconnect connectors (9 e 10) from the regulator (11) and electric fan (12) respectively;
- unscrew screw (13) and, after raising tab (14), turn base of fan (12) anti-clockwise until it stops and then remove from the assembly;
- unscrew the two bolts (15) and remove regulator (11) from the assembly

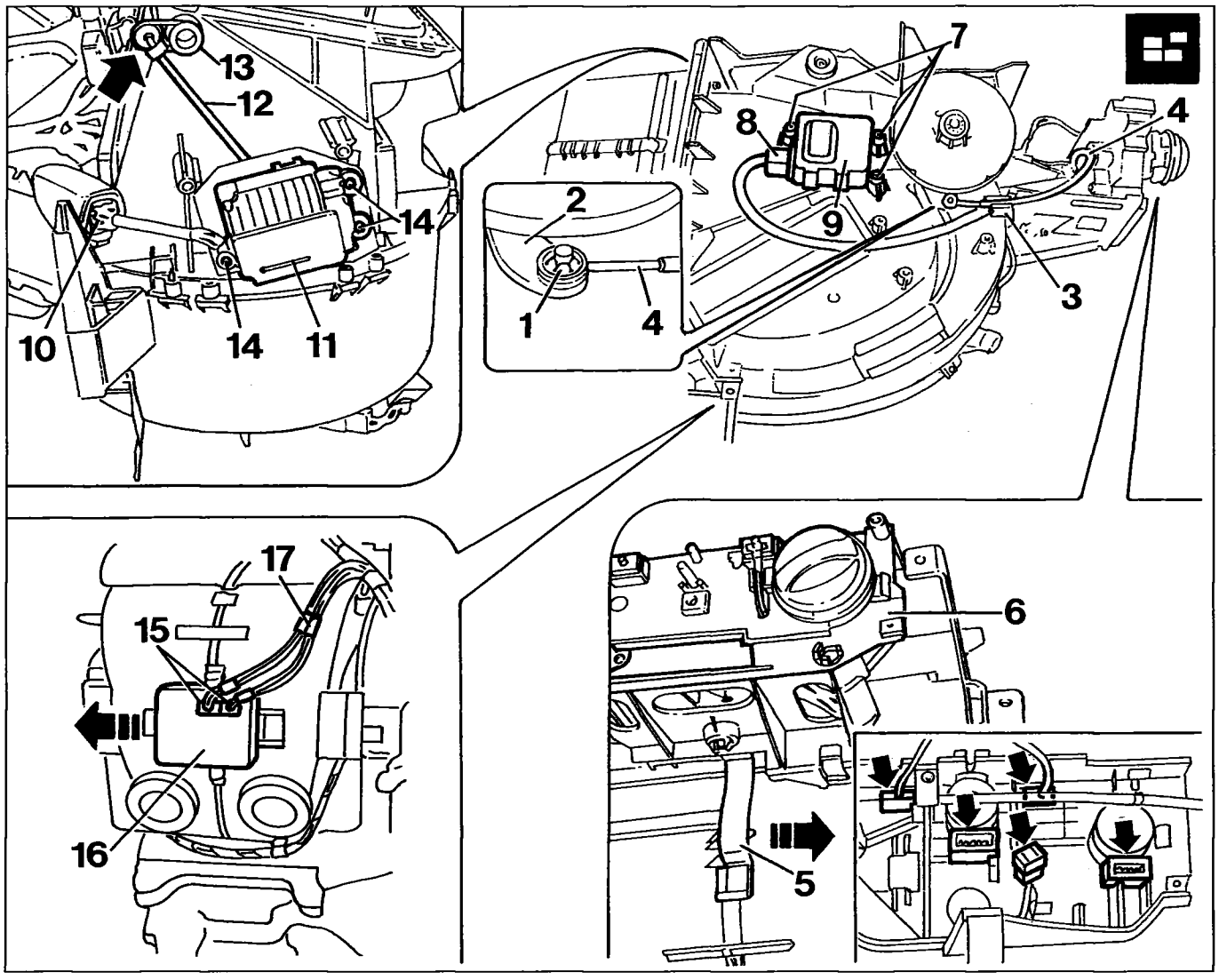

P4F049H01

- remove safety washer (1) and withdraw the eye at the end of the transmission cable (4) from pin of lever (2). Withdraw cable from the assembly and release its sheath from the associated retaining clip (3), after removing (moving to one side) the safety clip;
- disconnect electrical connections of control unit, arrowed in the figure
- move clip (5) retaining control mount (6) to one side from the rear of the control unit i order to remove from its housing on the heater distributor assembly:
- separate the control assembly with cable from the assembly;
- unscrew the three bolts (7), disconnect connection (8) and remove mixer actuator (9);
- disconnect electrical connection (10) of recirculation actuator (11);
- release rod (12) connected to actuator (11) from the arrowed clip, which retains it to air intake flap positioning lever (13);
- unscrew the three screws (14) and remove actuator (11);
- disconnect the two connections (15) from control unit (16); withdraw the control unit, which is mounted on a slide; disconnect any connections still connected and remove wiring (17) by disconnecting from the clip connecting it to the unit.

Copyright Fiat Auto

50.

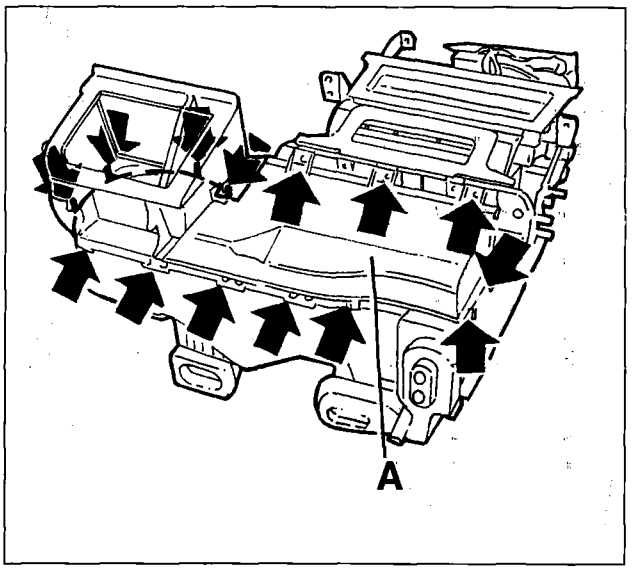

P4F050H01

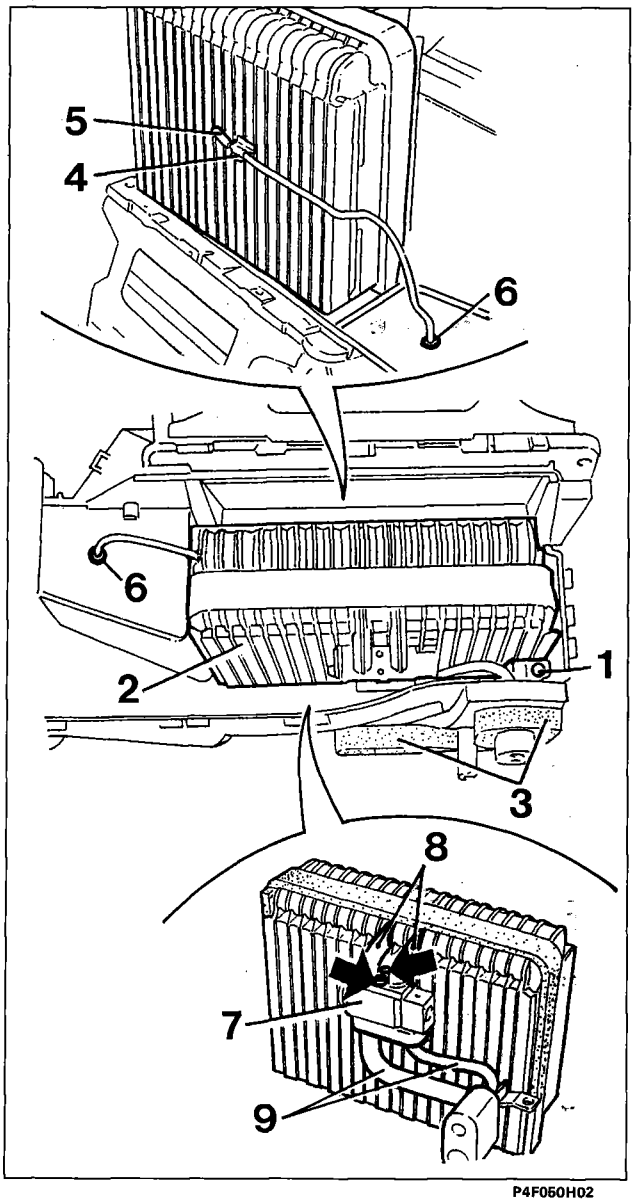

P4F050H02

- unscrew the arrowed bolts and separate upper case half (A) from the assembly;
- unscrew screw (1), lift evaporator (2) from the lower case half, taking care not to tear rubber seal (3). Remove clip (4) retaining the sensitive element of defrosting sensor (5) from the finned surface;
- remove clip (4) and pass the sensitive element of the defrosting sensor and its supply lead through hole (6);
- remove evaporator (2) together with expansion valve (7);
- if necessary, separate valve (7) from fittings (8) and (9) by unscrewing the two arrowed bolts.

NOTE *The figure shows the expansion valve together with the diameters of its orifices and the internal sensitive equalisation pipe.*

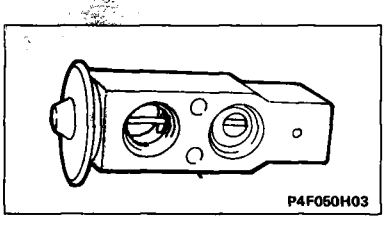

P4F050H03

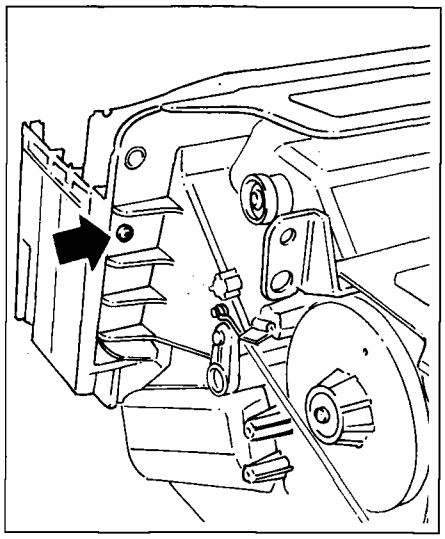
P4F051H01

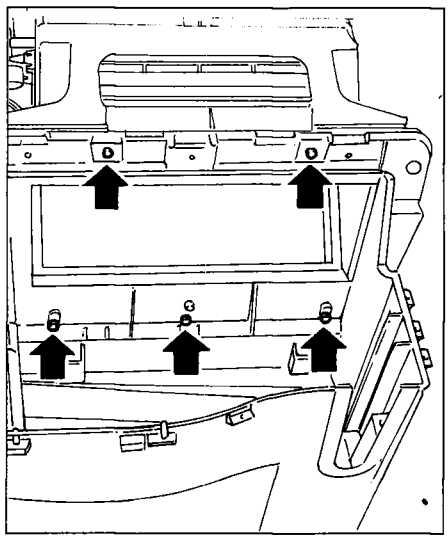
P4F051H02

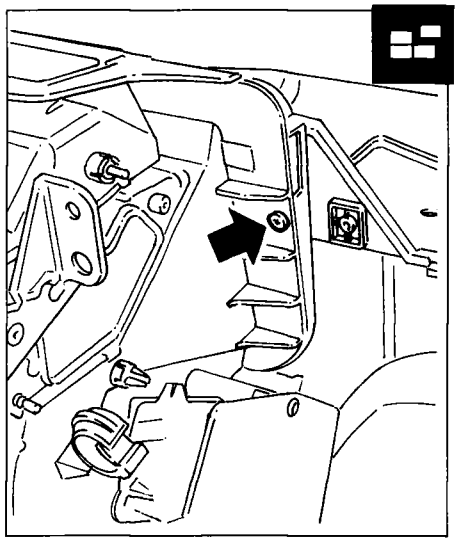
P4F051H03

- unscrew the six bolts indicated by arrows in the upper figure, which secure the lower case half to the distributor heater assembly and separate.

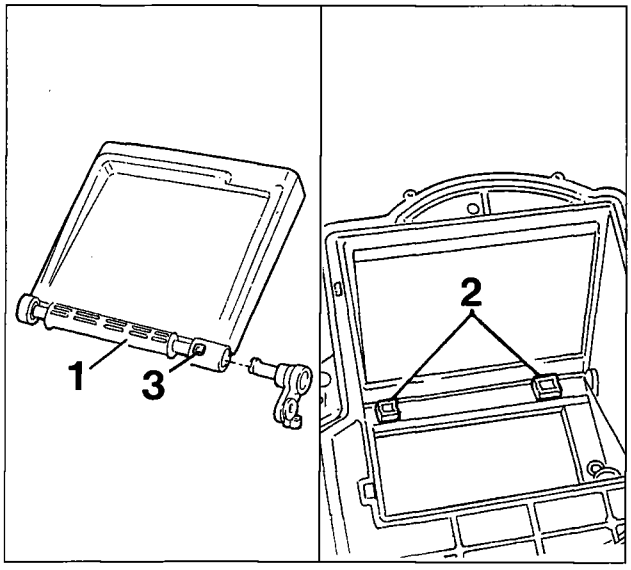

P4F051H04

- work through the small slot (3) on the air intake flap (1) to release the lever shank, which may then be withdrawn from the upper case half;

- release the air intake flap (1) from the upper shroud case half. Note that the shaft is press-fitted and connected with tabs (2);

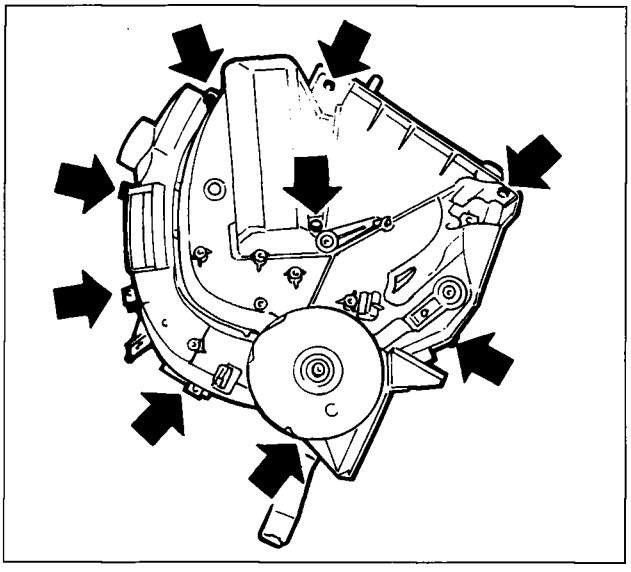
P4F051H05

- unscrew the bolts indicated by arrows which join the two case halves together and constitute the heater/distributor assembly.

50.

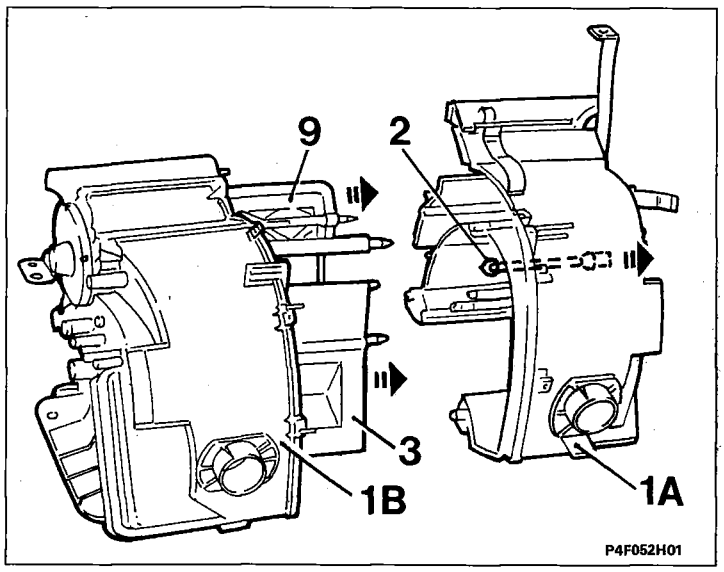

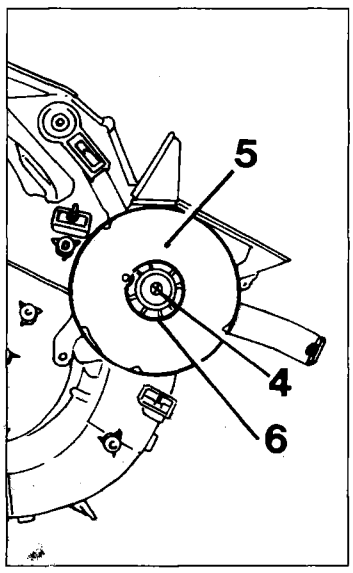

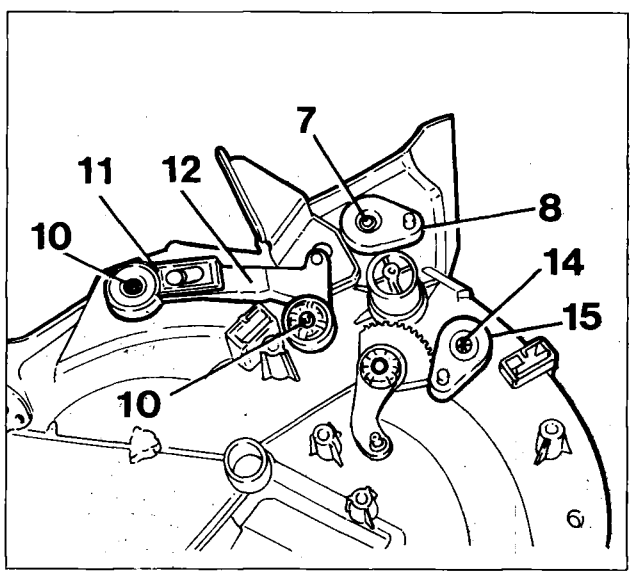

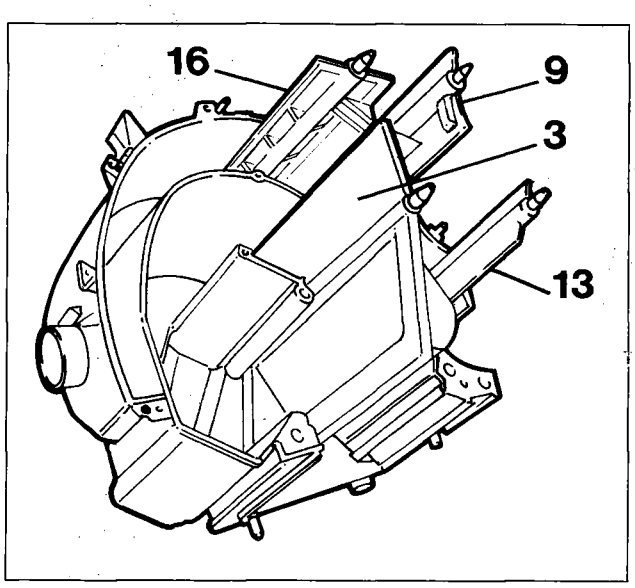

- release the right case half (1A) from the left half (1B). Take care not to damage the flaps;
- recover the treated air temperature sensor (2) and withdraw as shown in the figure.
- withdraw the mixer flap (3) from the left case half;
- unscrew screw (4) which retains the distributor disc (5) to the left case half. Take care not to lose the moulded plastic washer (6);
- unscrew screw (7) and release lever (8) which is fitted in one possible position on the top rear distribution flap (9). Release the flap from the left case half;
- unscrew bolts (10) and release lever (11) (with control lever 12) fitted in one possible position on the spindle of the upper front distributor flap (13) and release the flap from the left case half;
- unscrew screw (14) and disconnect lever (15) from the lower distribution flap spindle (16).

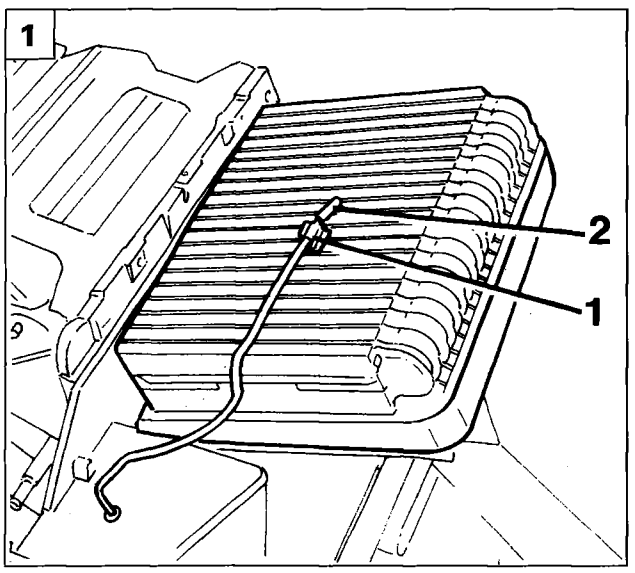

P4F053H01

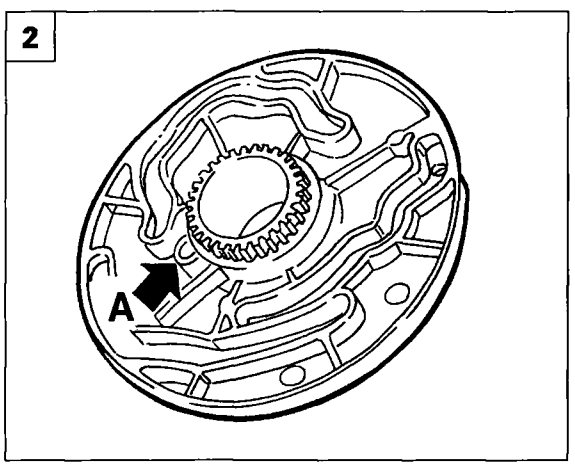

P4F053H02

Assembly and refitting

Carry out the operations described and illustrated for dismantling and rebuilding in reverse order. Note the following points:

1. The sensitive element (2) of the defrosting sensor must be located in the middle of the finned evaporator surface. The clip (1) must therefore be fitted in a suitable position to achieve this condition.

2. Before refitting the distributor disc, lubricate the lever operation splines using TUTELA ZETA 2 grease

3. Position the various levers so that their operating pivots (arrowed) are aligned with the holes on the distributor disc when the distributor is properly fitted on the toothed sector (3), i.e. when the sector ridge is fitted into disc hole (A).

4. Before fitting the two metal pipes (6) into the split heater radiator fitting, check that tapered metal rings (5) are fitted into their ends and that o-rings (4) are fitted into the ring holes.
   After ftting the pipes into the split heater radiator fitting, secure by means of plate (7) (positioned as shown in the figure). Take care not to spoil the sealing rings.

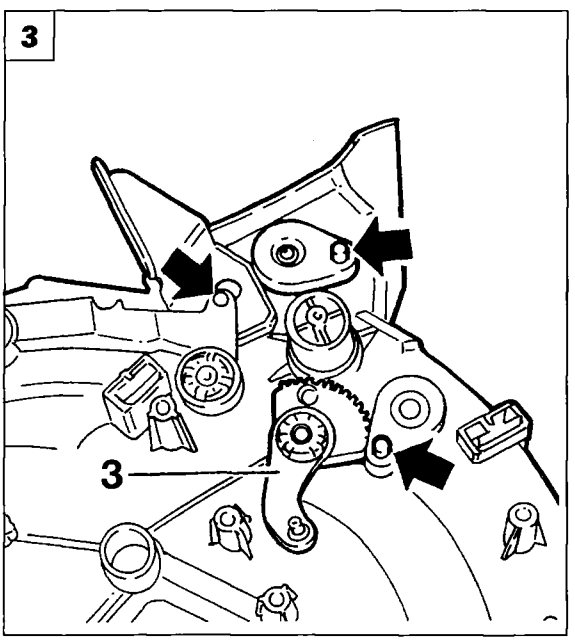

P4F053H03

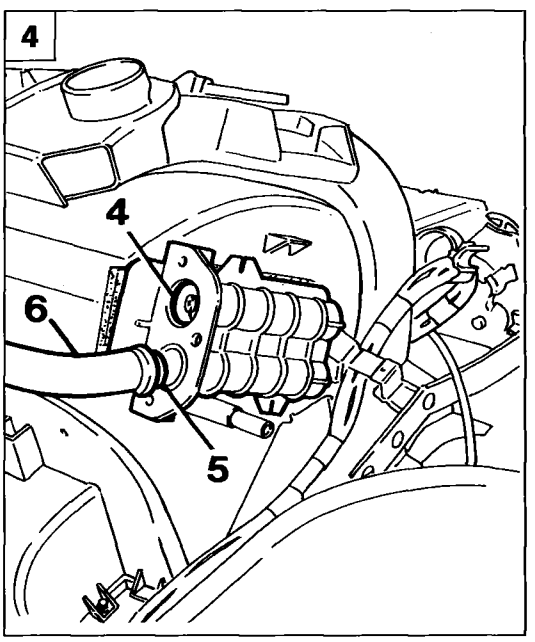

P4F053H04

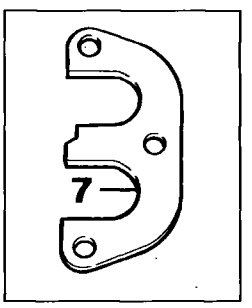

P4F053H05

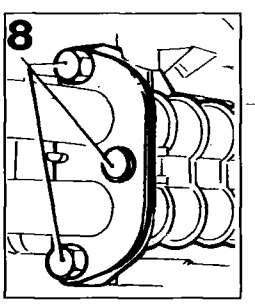

P4F053H06

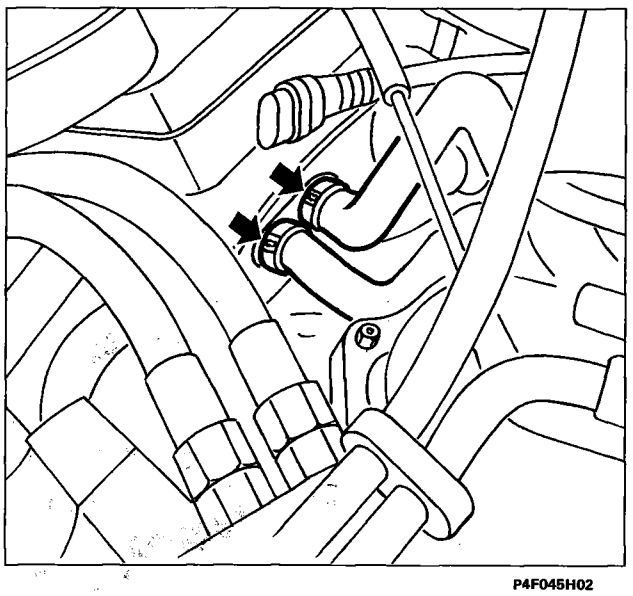

P4F045H02

HEATER RADIATOR

Removing

- Drain the engine cooling system;
- working from the lower rear part of the engine bay, loosen the two clips arrowed in the figure alongside and disconnect the two rubber pipes from the ends of the metal pipes protruding from the engine bay, which are connected to the heater radiator split fitting.

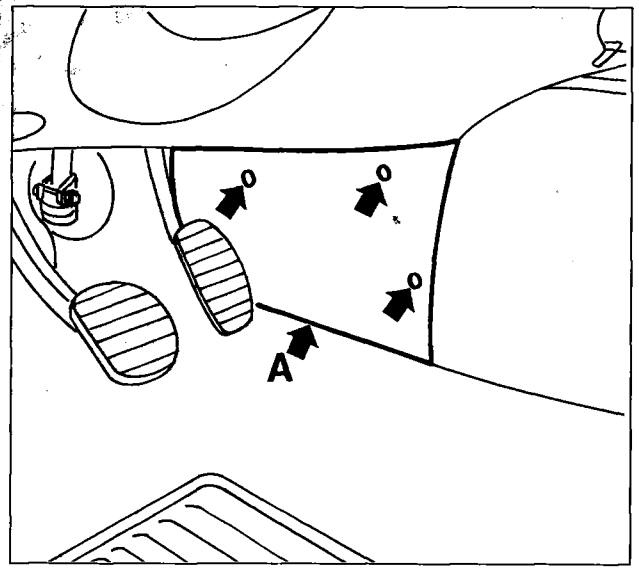

P4F054H01

- remove upper tunnel trim guard (**A**) to gain access to the radiator;
- remove the radiator as described in the previous pages on shroud/distributor assembly dismantling.

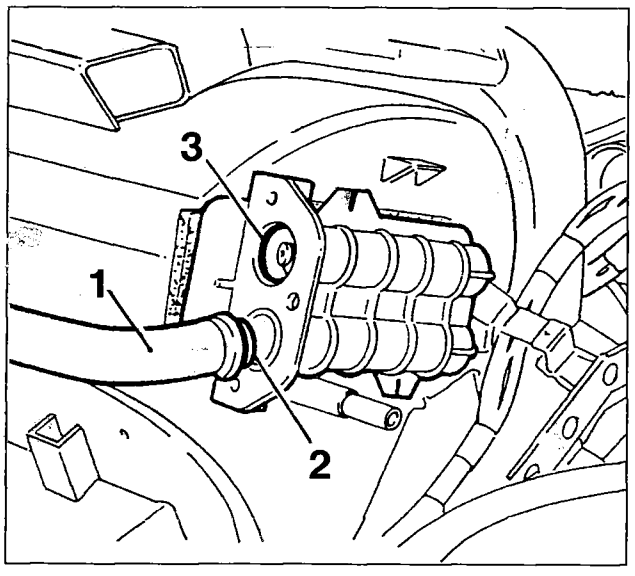

P4F054H02

Assembly and refitting

Carry out the removal instructions in rerverse order. Take care to fit the tapered metal rings (2) to metal pipes (1) and the o-rings (3) to the holes before fitting the metal pipes.

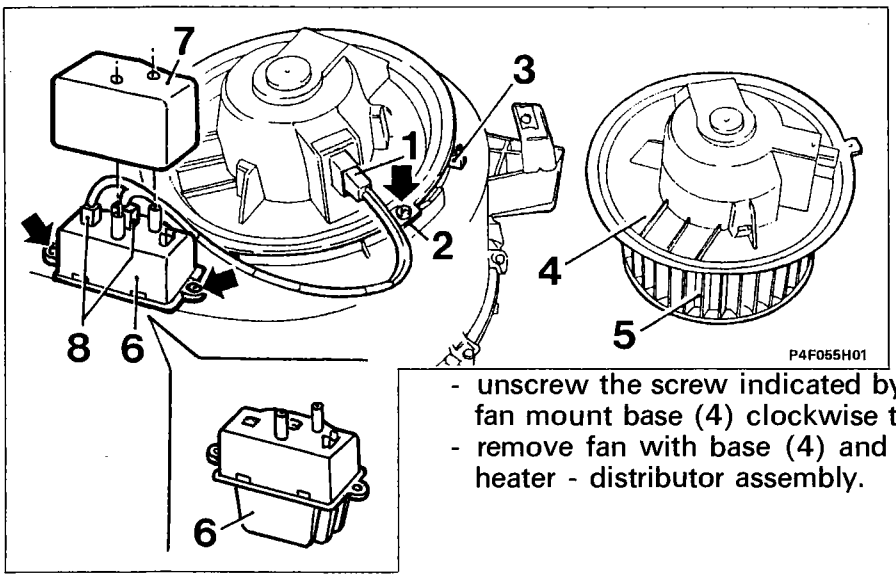

PASSENGER COMPARTMENT VENTILATION FAN

Removing-refitting

Working from the lower right side of the facia, carry out the following operations:

- disconnect supply lead connector (1);
- unscrew the screw indicated by the arrow, lower tab (2) and turn fan mount base (4) clockwise to stop (3);
- remove fan with base (4) and impeller (5) from the evaporator - heater - distributor assembly.

PASSENGER COMPARTMENT FAN ELECTRONIC SPEED GOVERNOR

Removing-refitting

To remove regulator (6), work on the lower left hand side of the facia to remove protective cover (7). Disconnect connector (8) and remove from the above assembly after unscrewing the retaining bolts.

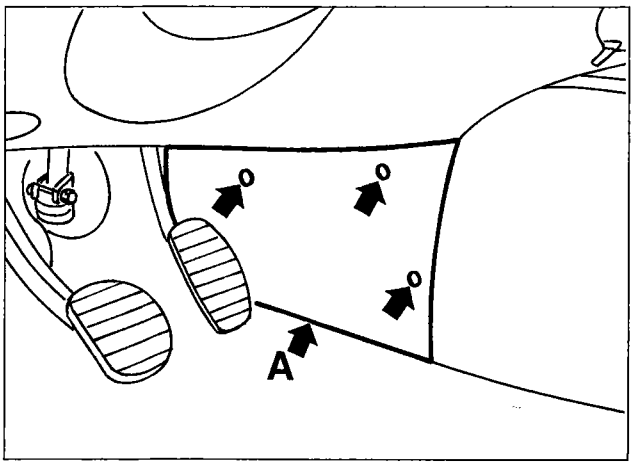

ELECTRONIC CONTROL UNIT

Removing-refitting

- Remove guard (A) of upper tunnel trim to gain access to the control unit.
- Disconnect electrical connections A and withdraw the control unit from the side (NOTE: the control unit is not fastened with bolts but fitted on a slide).

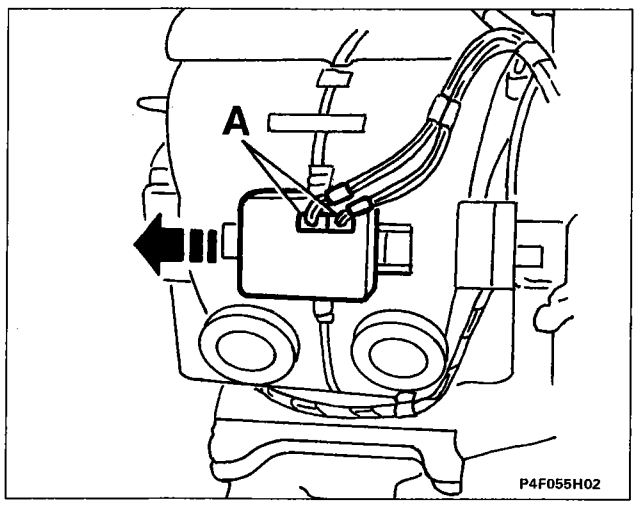

After each repair to the system, carry out FAULT DIAGNOSIS as described previously.

NOTE *For the other system components not mentioned here, remove and refit after removing the facia trim (see Group 70) and the shroud/distributor unit if necessary (see previous pages), as described in instructions for unit disassembly.*

50.

VARIABLE FLOW COMPRESSOR SPECIFICATIONS

Make and type	NIPPONDENSO TV 12 SC
Specified output	127 cm³ per revolution
Oil quantity and type	130-170 cm³ of ND - OIL 9
Electromagnetic coupling operating voltage	12V
Minimum electromagnetic coupling activation voltage	7.5 V
Power uptake by electromagnetic coupling	40W
Minimum current absorbed by electromagnetic coupling	max 2.2 A

HEATING/VENTILATION SYSTEM SPECIFICATIONS

Quantity of R 134 A coolant required to charge the system	0.600 Kg

SETTING RADIATOR AND CONDENSER COOLING FAN THERMAL SWITCH

	petrol versions without a/c	petrol versions with a/c	TD versions
Level 1 contact closure	92° ± 2° C	92° ± 2° C	88° ± 2° C
Level 1 contact opening	87° ± 2° C	87° ± 2° C	83° ± 2° C
Level 2 contact closure	–	97° ± 2° C	92° ± 2° C
Level 2 contact opening	–	92° ± 2° C	87° ± 2° C

SPECIFICATIONS OF EXTRA RESISTOR WITH THERMAL FUSE FOR RADIATOR AND CONDENSER COOLING FAN

	petrol versions	TD versions
Resistance value	0.3±0.03 Ω	0.23±0.02 Ω
Thermal fuse temperature setting	184°+0/-4°C	240°+0/-4°C

SETTING PRESSURES FOR THREE-STAGE PRESSURE SWITCH

LEVEL	SETTING LEVELS (in bar)	CONDITION CIRCUIT
1st	2.45 ± 0.25 (2.2 - 2.7)	Open
	2.6 ± 0.34 (2.26 - 2.94)	Closed
2nd	15.2 ± 0.98 (14.22 - 16.18)	Closed
	11.28 ± 0.98 (10.3 - 12.26) differential 3.92 ± 0.98	Open
3°	28 -3/+2 (25 - 30)	Open
	22 -3/+2 (19 - 24) differential 6 ± 2	Closed

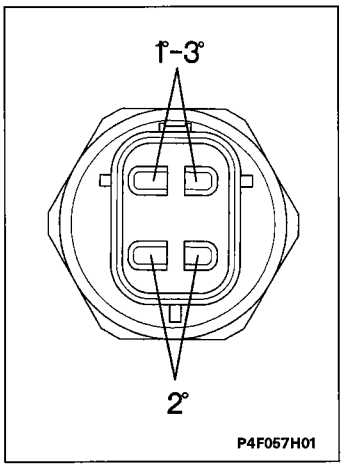

Contact location

50.

CHECKING SYSTEM EFFICIENCY

using high and low pressure gauges and thermometer on central outlet

NOTE *Operation to be carried out with outside temperature between 20° C and 30° C.*

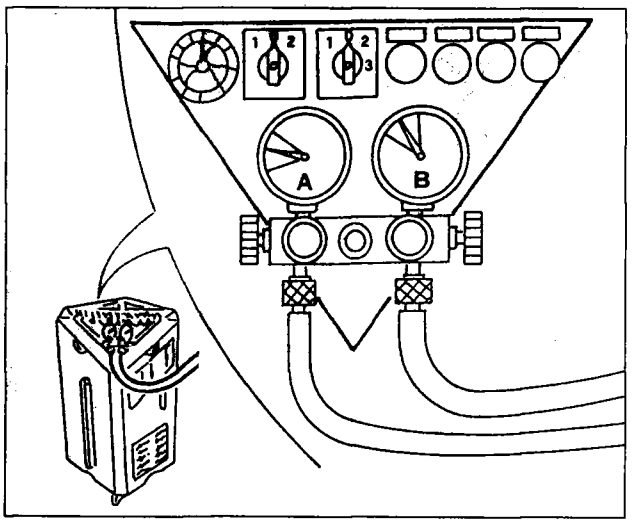

P4F058H01

- Connect the recharging station lines as indicated previously.

(A) low pressure circuit pressure guage
(B) high pressure circuit pressure guage

- Close all doors and windows with the air conditioning system OFF.
- Start the engine and run at 1250-1300 rpm with the gearbox in neutral.

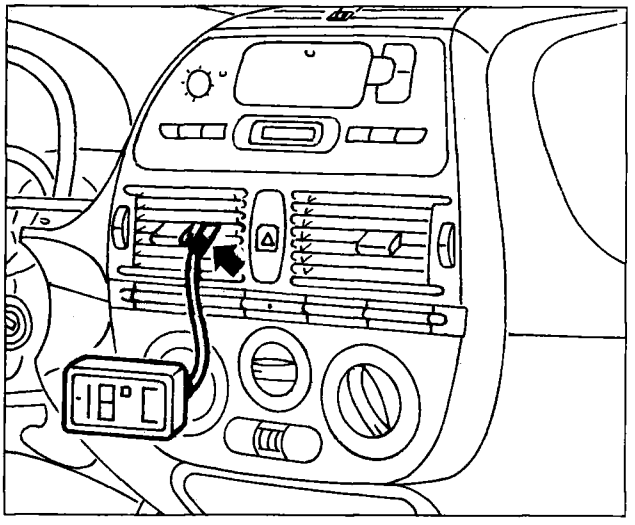

P4F058H02

- Open the central outlet flaps and place a digital thermometer in the middle.

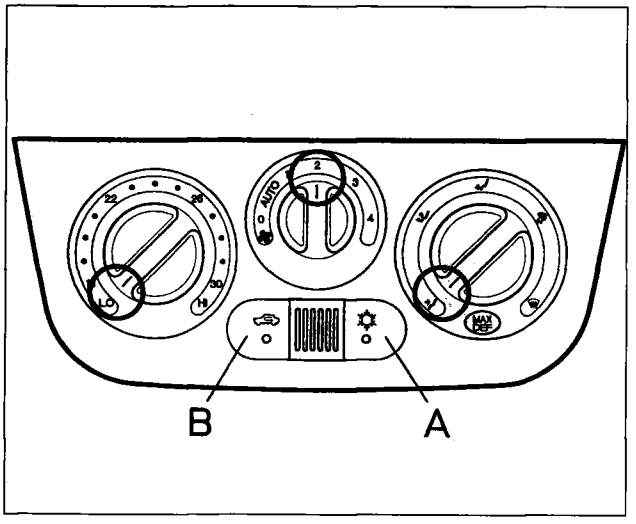

P4F058H03

- Raise the following functions
  - 2 fan speed
  - "LO": maximum cooling requirement
  - distribution to front
  - compressor (key A) NOT activated
  - recirculation (key B) activated

Under these conditions, the pressure gauges should indicate:
- **low pressure circuit (pressure gauge A): 5 - 6 bar**
- **high pressure circuit (pressure gauge B): 5 - 6 bar**

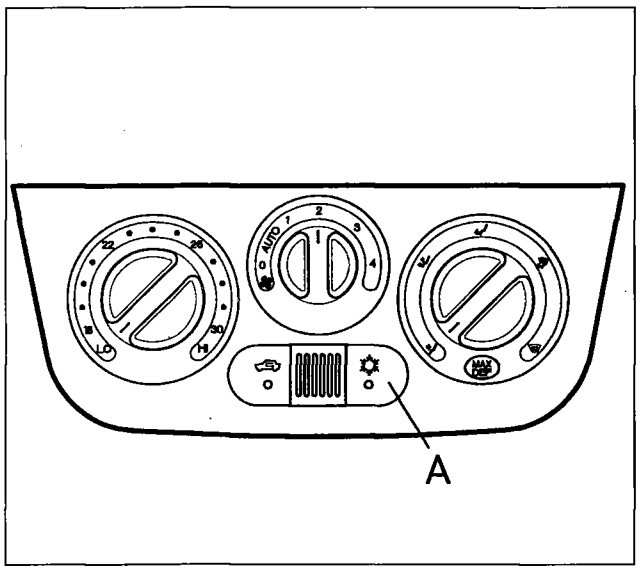

P4F059H01

– Activate the compressor by pressing key (A) and check that:
  - within 2 - 4 minutes the TEMPERATURE AT THE OUTLETS DROPS TO 8 - 11° C and stabilises.
  - within 1 minute, pressure gauge B (HIGH PRESSURE) RISES TO 15 - 16 bar. At this point, engine cooling fan cuts in to restore pressure to 10 - 12 bar. This cycle is repeated continually.

NOTE *With external temperature greater than 25° C, the pressure stabilises at 12 -÷ 14 bar and the fan NEVER GOES OFF.*

  - within 30 seconds, pressure gauge A (LOW PRESSURE) DROPS TO 2.5 - 3 bar and continues to drop to about 1.5 - 1.8 bar.

If the system does not operate properly, consult the following table which shows the main faults and their causes.

Anomalies	Probable causes
Pressures doe not alter significantly from the initial value	The compressor is not working
Delivery pressure does not rise to 15 bar, intake pressure drops to below 1 bar and outlet temperature drops slowly	The circuit contains insufficient gas Recharge the system
Delivery pressure rises immediately to 15 bar, but continues to rise even with the fan activated	a) if the intake pressure is higher than 2.5 - 3 bar, the system contains too much gas. b) if the intake pressure is too low, the intake valve is probably blocked.
The delivery pressure is correct, intake pressure drops below 1 bar, temperature to outlets is below 8° C and the system never goes off	The defrosting sensor or three stage pressure switch is not working (always closed).

Copyright Fiat Auto

50.

EQUIPMENT USED FOR HANDLING R134A COOLANT IN VEHICLE AIR CONDITIONING SYSTEM "R134A"

The Cleaner 134 device (shown in figure) is used to carry out the following operations on a vehicle air conditioning system:

- checking system operation;
- recovery of coolant present in the system;
- cleaning recovered coolant;
- draining and dehydrating system;
- recharging air conditioning system.

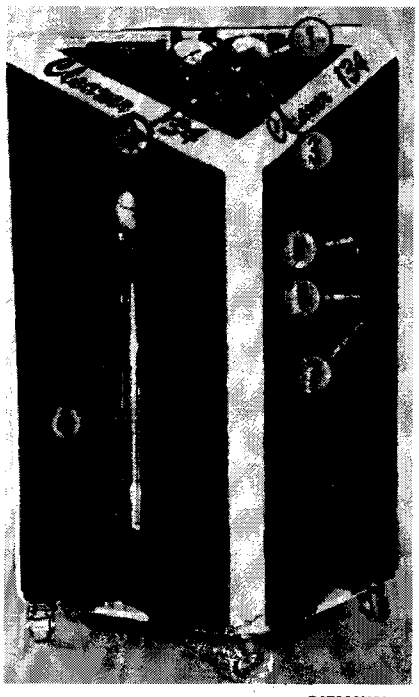

P4F060H01

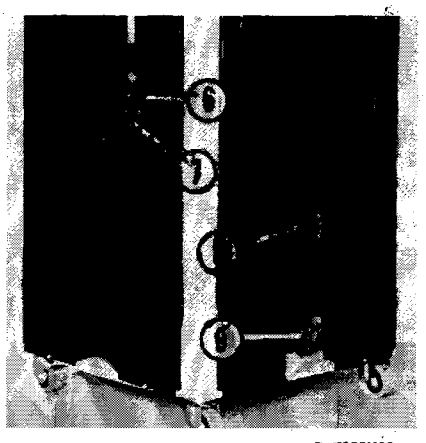

F4F060H02

1. Pressure gauge assembly
2. Fitting for connection hose
3. Fitting for connection hose
4. Dispensing cylinder
5. Slot for viewing level of oil separated from coolant
6. Drain cock for oil separated from recovered coolant
7. Oil drain fitting
8. Master switch knob
9. Seat for supply lead plug (female)

NOTE *Consult DRAINING AND RECHARGING OPERATIONS section for instructions for connecting the device to the vehicle system.*

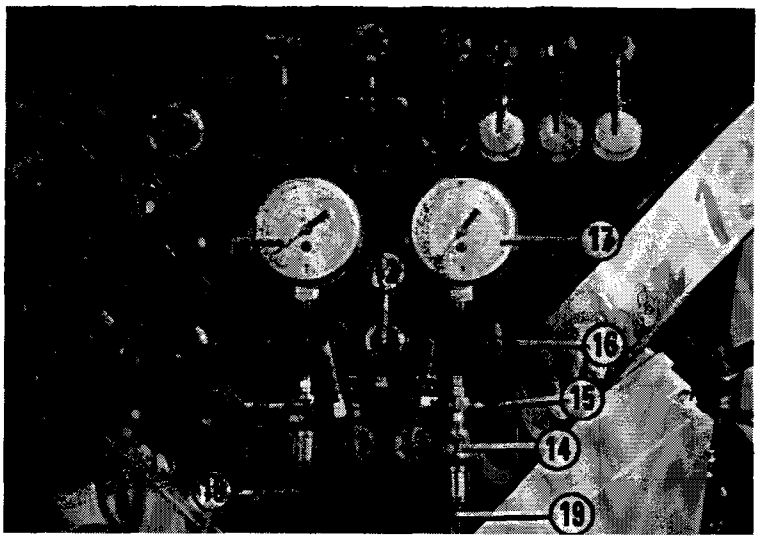

P4F060H03

Detail of top panel of Cleaner 134 device

1. Moisture indicator
2. Function selector
3. Function switch
4. Compressor forcing button and "LOCK" warning light"
5. "PUMP" warning light"
6. "LEVELS" warning light"
7. Device activated "ON" warning light"
8. Low pressure side gauge
9. Low pressure cock "LOW"
10. Fitting for low pressure end hose
11. Cock "VAC"
12. Liquid gauge
13. Cock "REF"
14. High pressure end hose fitting
15. Fitting for connecting vehicle system oil filling device
16. High pressure cock "HIGH"
17. High pressure end pressure gauge
18. Low pressure end hose
19. High pressure end hose

TABLE SHOWING TAP AND SELECTOR POSITION FOR EACH INDIVIDUAL OPERATION

OPERATION	COCK LOW (9)	COCK VAC (11)	COCK REF (13)	COCK HIGH (16)	FUNCTION SELECTOR KNOB (2)	FUNCTION SELECTOR KNOB (3)
A	open	closed	open	open	position 1	position 1
B	open	open	closed	open	position 2	position 0
C	closed	closed	open	open	position 1	position 2
B	closed	closed	open	open	position 1	position 2
E	closed	closed	open	open	position 1	position 1
F	closed	closed	closed	closed	position 1	position 3

A Coolant recovery and recycling
B Vehicle system draining and drying
D Charging vehicle air conditioning system
B Transferring coolant from dispensing cylinder to a canister
E Transferring coolant from canister to equipment dispensing cylinder
E Replacing vehicle filters

The table contents summarise the instructions given on the labels applied centrally to the top of the device.

For operations listed previously, consult table and note the points listed for each in the following text. Consult handbook provided with device for more detailed instructions.

RECOVERING AND RECYCLING HEATING/VENTILATION SYSTEM COOLANT

Before recovering coolant from vehicle air conditioning system, check that device dispensing cylinder contains only a small amount of coolant. Then run vehicle engine with air conditioning system activated for 10-15 minutes.

This precaution prevents the device dispensing cylinder filling completely and automatic interruption of the operation with transfer of excess coolant to a canister. A maximum amount of coolant may be recovered from the vehicle system under these circumstances.

When coolant pressure at the device low pressure intake reaches a level of - 0.2 bar, a pressure switch automatically interrupts operation and «BLOCK» warning light (14) comes on. An acoustic signal indicates that the recovery operation is complete

Copyright Fiat Auto

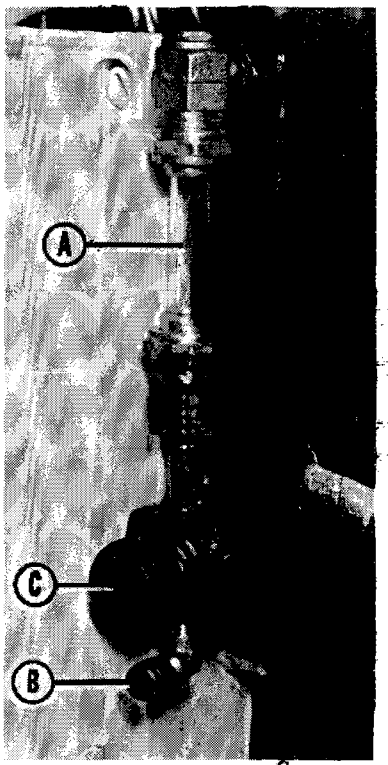

P4F062H01

When the signal sounds, leave the device connected to the vehicle system and working for another 10 minutes so that any pockets of low pressure coolant in the vehicle system can absorb heat in order to increase pressure and be recovered.

To reduce waiting times associated with the last operation described above, recovery of residual coolant may be forced by pressing button (14). This operates the device compressor and checks vacuum level reading on blue low-pressure gauge.

At the end of the above operation, oil separated from the recovered coolant by the distillation unit may be observed by consulting level gauge (A) and drained off through fitting (B) after opening cock (C).

NOTE *The device is also supplied in a version with screw-on container for collecting coil. This replaces parts A, B and C indicated (see previous pages).*

The same amount of clean antifreeze may be added to the vehicle system if necessary to make up the amount taken up by the device with the coolant.

For further details, consult "TOPPING UP COMPRESSOR FLUID LEVEL" section.

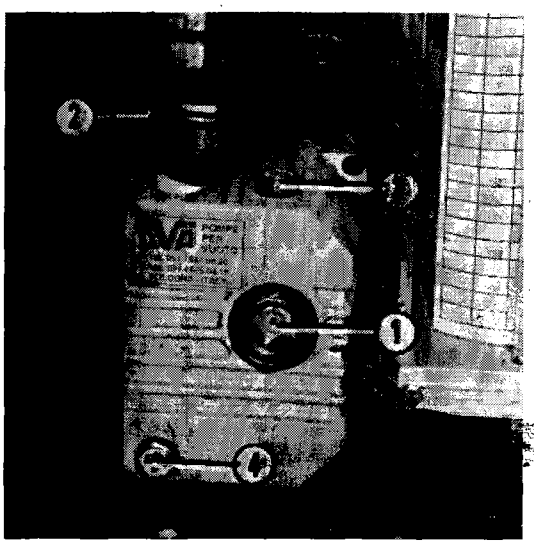

P4F062H02

DRAINING AND DRYING THE VEHICLE AIR CONDITIONING SYSTEM

Before draining and drying the system, check that the device vacuum pump contains the specified amount of uncontaminated oil by carrying out the following operations:

- run pump by turning function selector lever to position 2. After checking oil level in indicator window (1) partly unscrew ballast (2) to bleed off any uncondensed gas that could contaminate the oil and cause serious damage to the pump;
- after 5 minutes of operation, check that level of oil comes just over half way up indicator window (1) and no impurities can be seen on the surface;

The oil level in the warm vacuum pump should not be higher or lower than the extreme levels shown on the indicator window (1). If too high, the pump will be overfilled with oil and overheat so that it performs inefficiently. If too low, insufficient lubrication could lead to the danger of seizure.

Vacuum pump operation is indicated by «PUMP» warning light coming on. When left hand pressure/-vacuum gauge (low pressure side) indicates a vacuum reading, close VAC cock and turn function selector knob to 0.

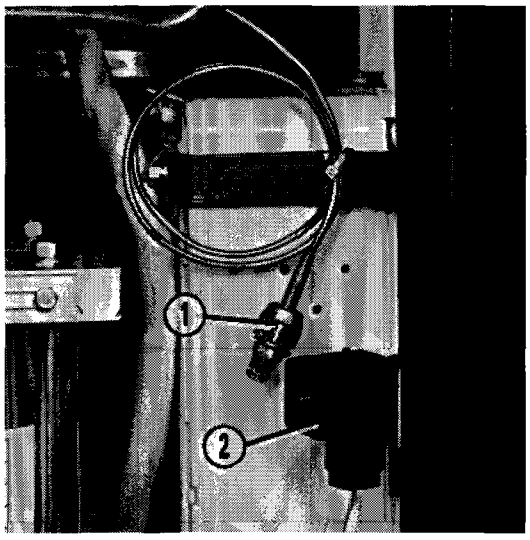

P4F063H01

During the next 5 minutes check vehicle system seal by ensuring vacuum reading on left-hand pressure/vacuum gauge or an electronic vacuum gauge (connected to fitting 1) does not drop and no leaks are noted. Continue with interrupted operation until above pressure gauge shows a vacuum reading of 10 mbar.

View of parts used to connect electronic vacuum gauge

1. Fitting
2. Electrical power point

CHARGING THE AIR CONDITIONING SYSTEM

Before charging vehicle air conditioning system, check that level of coolant in device dispensing cylinder corresponds to an amount much greater than the amount to be added to the system because the device goes off automatically when the minimum level is reached.

Add 70 grams to the amount of fluid specified for the system because this represents the amount left in the connection lines when these are disconnected from the system needle valves.

If the system cannot be charged fully because pressure in system is at the same level as the pressure in the dispensing cylinder, close HIGH cock, start vehicle engine, activate air conditioning system (fan set to maximum cooling and top speed), slowly open LOW cock and reclose together with REF cock when system charging is complete.

TRANSFERRING COOLANT FROM DEVICE DISPENSING CYLINDER TO A CONTAINER (CANISTER)

Before beginning transfer, ensure that recipient is approved for pressures up to 35 bar and set up a vacuum inside (at least -0.1 bar)
Use only the red hose for the transfer operation (high pressure side) and connect to recipient service valve. Note that recipient must be filled solely with an amount equivalent to less than 80% of its volume.

TRANSFERRING COOLANT FROM CANNISTER TO EQUIPMENT DISPENSING CYLINDER

If this operation becomes necessary while charging the vehicle air conditioning system, first empty the system and recover all the coolant added.

CHECKING PRESSURES IN VEHICLE SYSTEM

Pressure values can be read directly off the two device gauges (blue low pressure and red high pressure) after connecting the two device hoses to the system.

Copyright Fiat Auto

50.

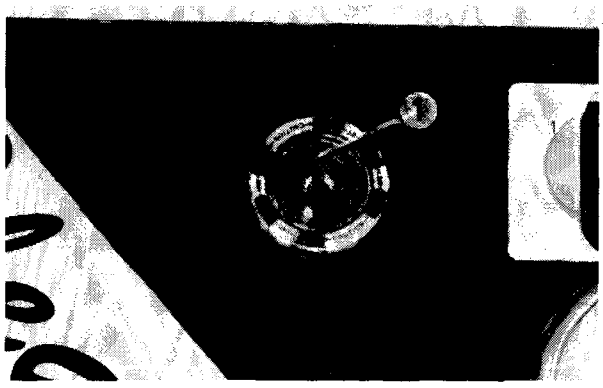

P4F064H01

MOISTURE INDICATOR AND FILTER REPLACEMENT

According to the colour assumed, moisture indicator (1) records the amount of moisture present in the liquid coolant after flowing through the first three device filters.
Colours indicating percentage moisture levels for given temperatures are shown in the table below

INNER DISC COLOUR	CORRESPONDING WORDING	MOISTURE CONTENT (in parts per million)		
		24° C	38° C	52° C
LIGHT BLUE	DRY	Less than 5	Less than 10	Less than 20
PURPLE-BLUE	CAUTION	5 - 10	10 - 30	20 - 50
RED	WET	Greater than 15	Greater than 30	Greater than 50

When the central disc is light blue, the coolant is in good condition. When the colour becomes darker blue, the filters are still in good condition and the coolant contains an acceptable level of moisture. When the colour begins to lose its bluish shade and becomes purple, replace the filters.
The filters must be replaced at the end of the operation in progress even if the central disc has become red. This is possible because the safety filter ensures an acceptable level of coolant cleanliness is maintained (third filter station).
To estimate the temperature of coolant in the moisture indicator, rest the thumb of one hand on the clear part and use the colour scale given in the following table for the relevant temperature according to the sensation felt:

Sensation of cold	Use colour column corresponding to 24°C
Sensation of warmth	Use colour column corresponding to 52°C
No sensation	Use colour column corresponding to 38°C

Maximum acceptable moisture level in coolant is 15 parts per million.
The device automatically empties the part of the system connected to the filters for replacement and when a vacuum of - 0.2 bar is set up in the compressor inlet line, a pressure switch stops the compressor and simultaneously lights up the «BLOCK» warning light while turning on an acoustic signal;
When filters are removed for replacement, check that they are under a slight vacuum. If this is not the case, the device system may not be working properly.
After replacing the filters, connect device to a cannister of R 134 A or a vehicle air conditioning system and perform a recovery and cleaning cycle in order to eliminate air and moisture from the system.
When filters are changed, moisture indicator disc filters become red. Before the colour changes back to blue, they need to recover and recycle up to 2.5 kg coolant. Coolant purity level is good even if moisture indicator disc colour is not fully settled.

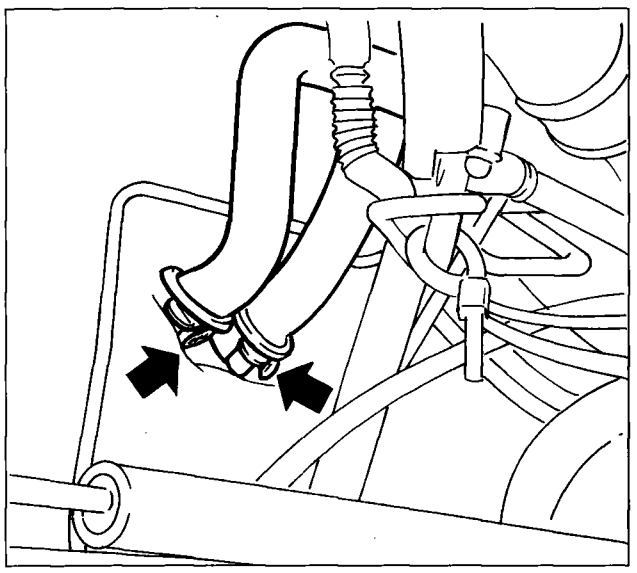

P4F065H01

DISTRIBUTOR HEATER ASSEMBLY

Removing

- Drain engine cooling system;
- remove the upper trim from the tunnel and the instrument facia (see Group 70);
- working from the lower rear of the engine bay, loosen the two clips arrowed in the figure alongside and disconnect the two rubber pipes from the ends of the metal pipes protruding from the engine bay, which are connected in turn to the split heater radiator fitting;
- unscrew the bolts indicated by the arrows in the lower figure, which secure the heater - distributor assembly to the body;
- disconnect the electrical connection (1) and remove the above assembly from the vehicle;

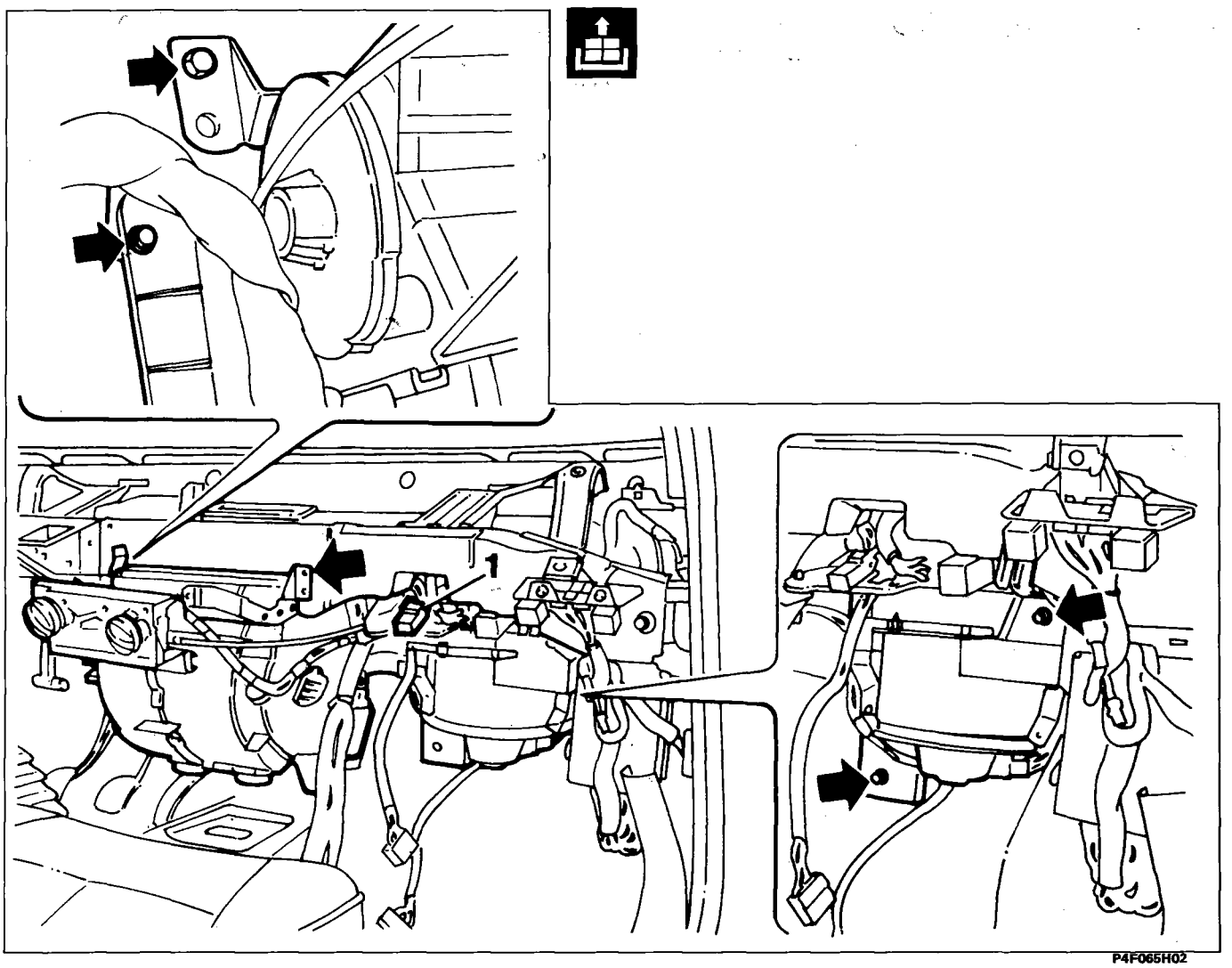

P4F065H02

50.

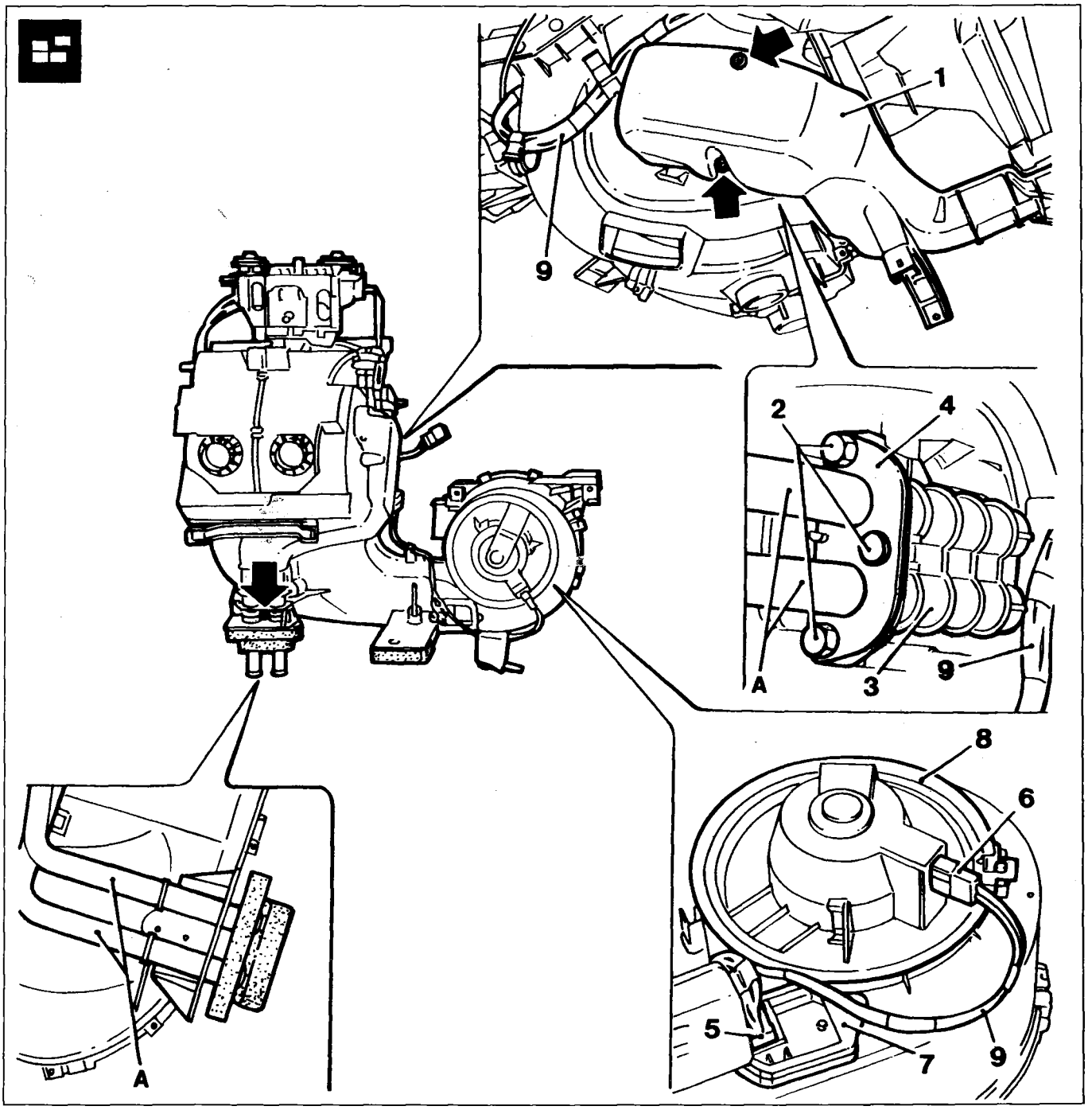

P4F066H01

Disassembly

Carry out the following operations:

- unscrew the arrowed bolts, which fasten guard (1) to the distributor heater assembly at the bottom and side (right hand side).
- unscrew the three bolts (2) and take care not to lose the nuts in the seats on the heater radiator split fitting (3);
- remove plate (4) and disconnect both metal pipes (A) from the heater radiator split fitting;
- disconnect connectors (5 and 6) from resistor (7) and fan (8) respectively and release wiring (9) from the various clips retaining it to the above assembly;

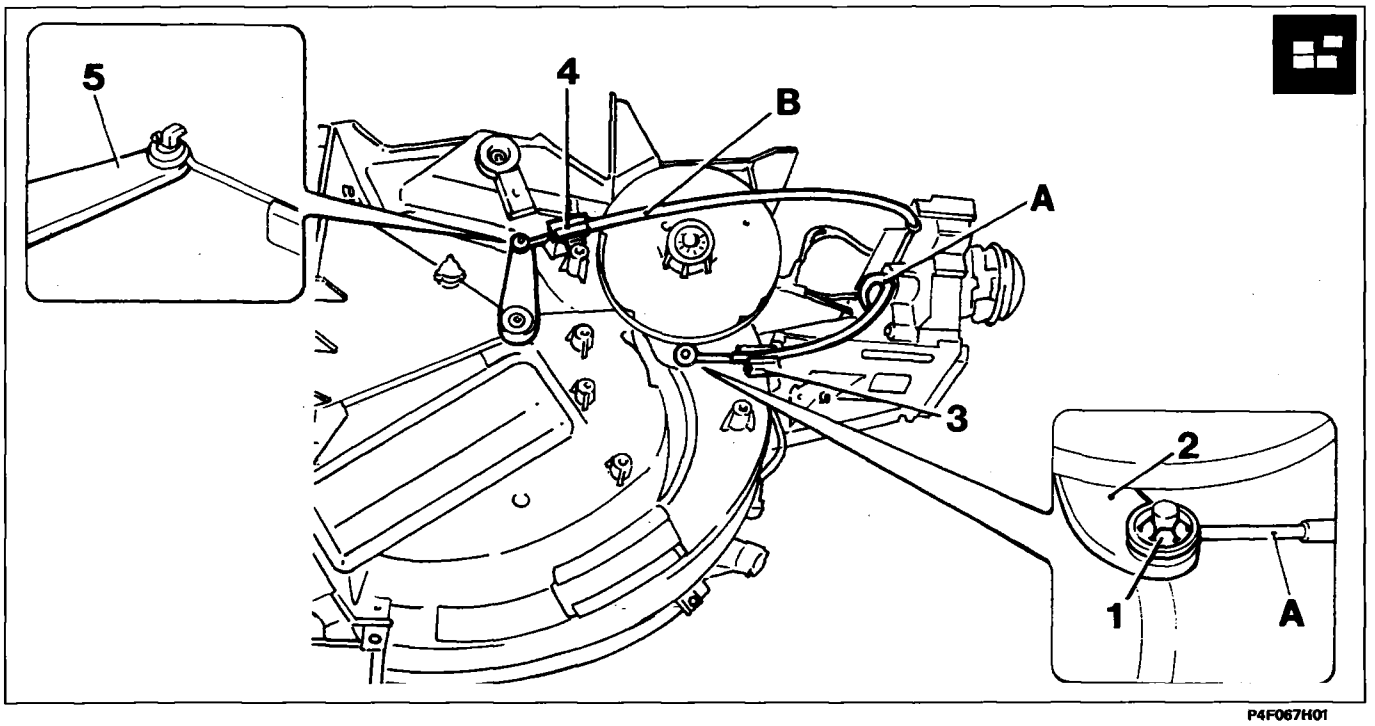

P4F067H01

- remove safety washer (1) and withdraw the coiled eye at the end of cable (A) from the pin of lever (2). Undo the cable from the assembly by releasing its sheath from retaining clip (3) after removing (moving to one side) the safety clip;
- undo sheath of cable (B) from retaining clip (4) and release the coiled eye at the end of of the cable from the L-shaped pin on lever (5);
- remove clip (6) by moving to one side and release the sheath of cable (C) from the underlying clip. Release the coiled eye at the end of the cable from the L-shaped pin on lever (7);
- move spring (8) retaining control support (9) sideways in the arrowed direction in order to remove it from its seat on the distributor heater assembly;
- separate the control mount together with cables and electrical wiring from the assembly;

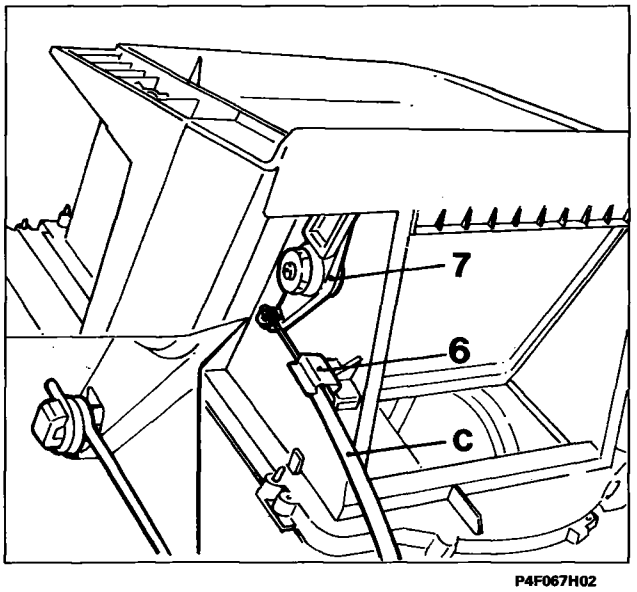

P4F067H02

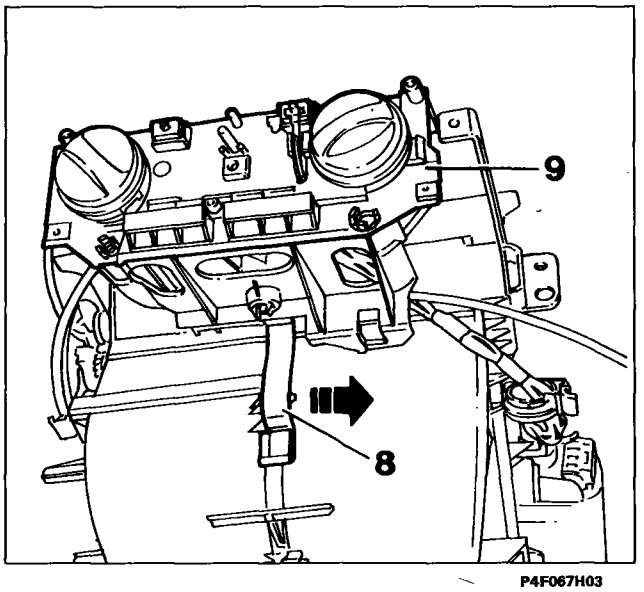

P4F067H03

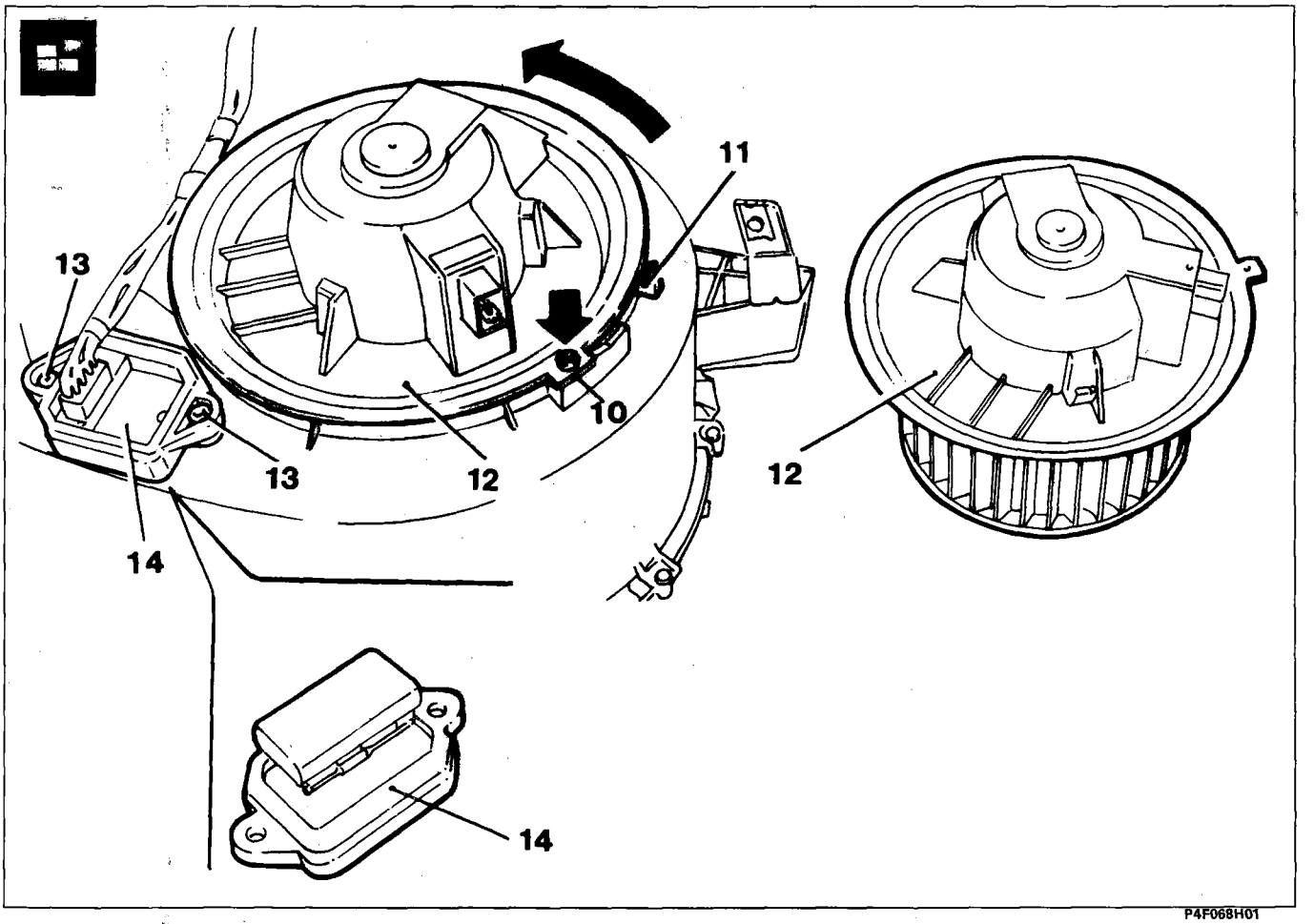

P4F068H01

- unscrew the screw indicated by the arrow and turn fan mount base (12) anticlockwise after lifting tab (10) until it reaches stop (11). Then remove the fan from the assembly;
- unscrew the two screws (13) and remove resistor (14) from the shroud;
- unscrew the screw indicated by the arrow in the lower left hand figure and slowly remove the heater radiator (15) from the assembly. Take care not to spoil the finned surface and the self-adhesive foam rubber strip round the outside;

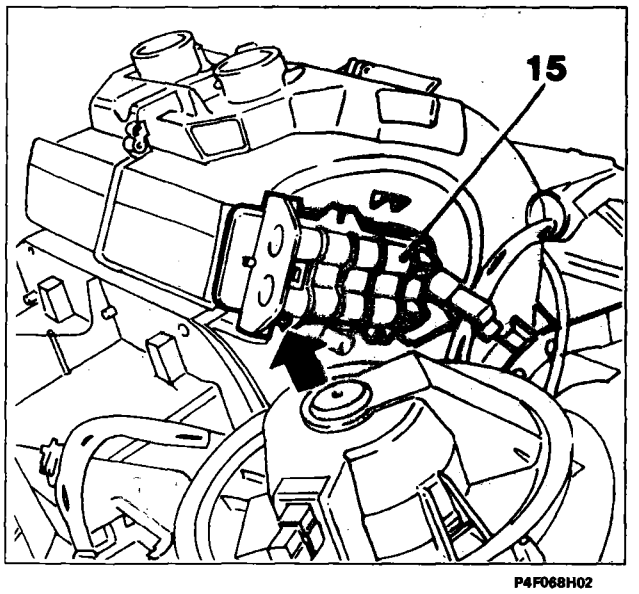

P4F068H02

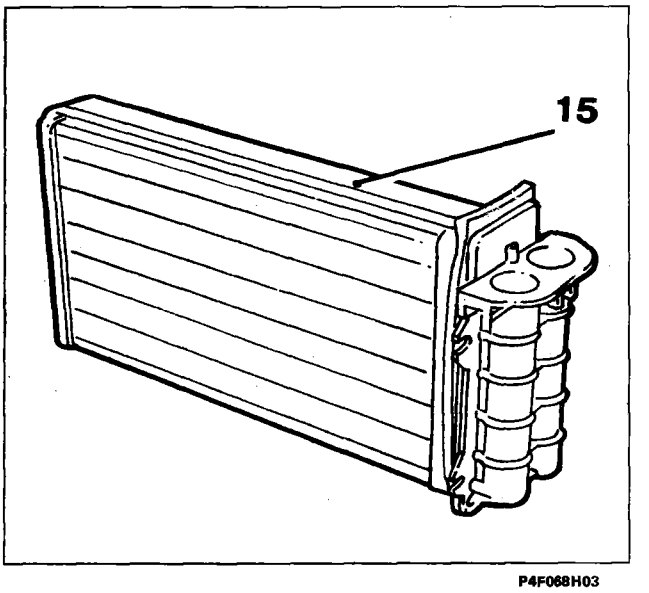

P4F068H03

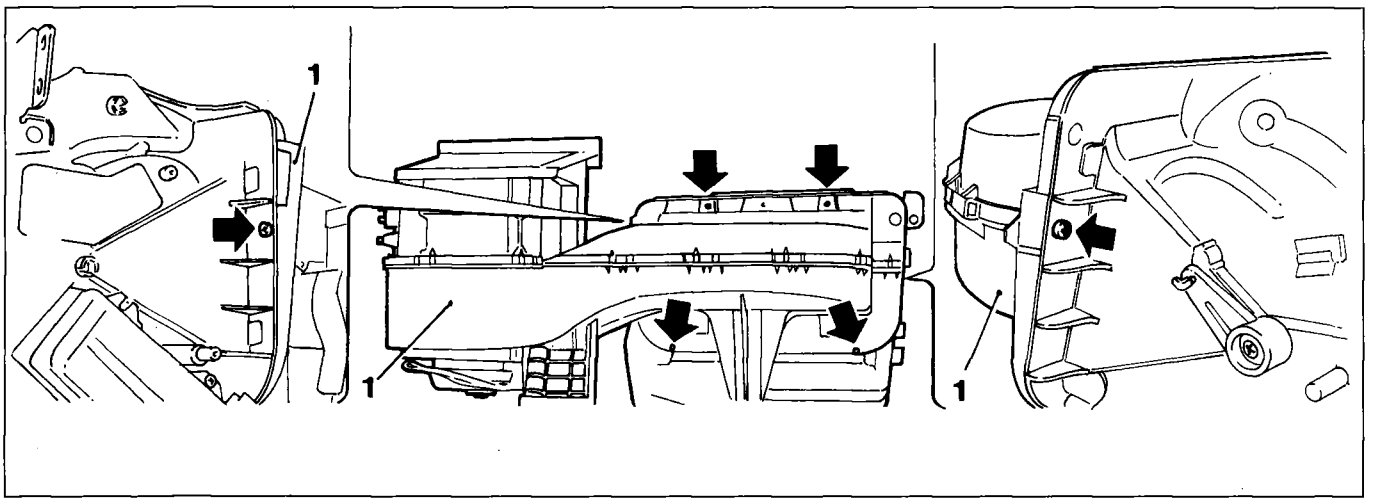

P4F069H01

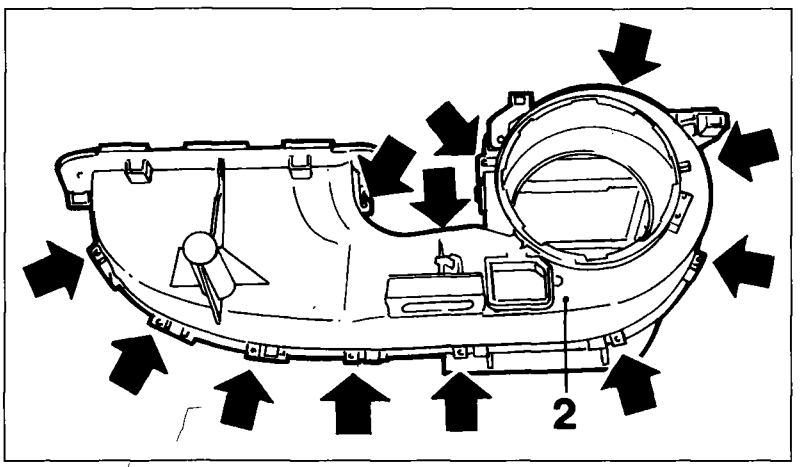

P4F069H02

- unscrew the bolts indicated by the arrows in the upper figure, which fastens the front part of shroud (1) round the outside to the heater distributor unit;
- unscrew the bolts indicated by the arrows in the figure alongside, which join the two halves of the case making up the air shroud (2);

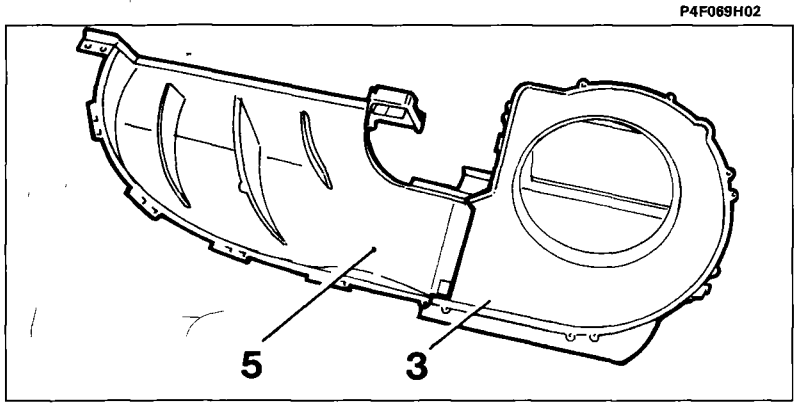

P4F069H03

- remove diaphragm (3) carrying air to the fan, which is fitted by means of tabs with toothed profiles (4) to the inner part of the upper shroud half (5).

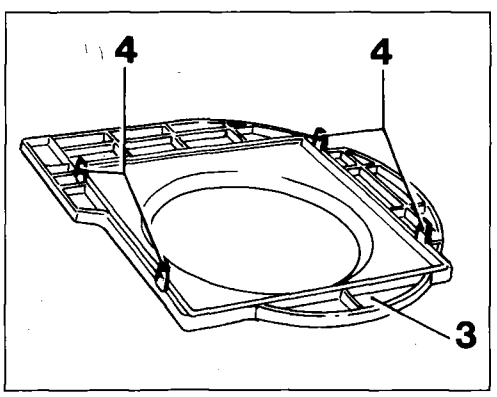

P4F069H04

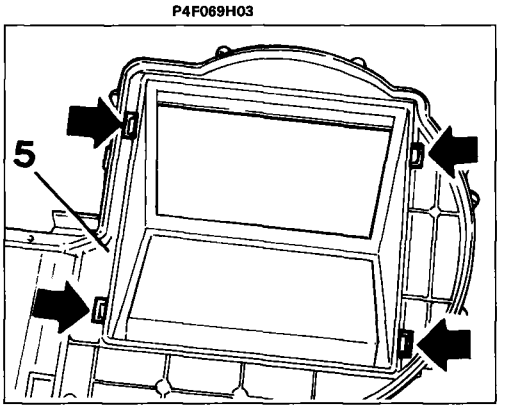

P4F069H05

Details of the shroud diaphragm and upper shroud case half

The arrows indicate the seats into which the shroud diaphragm tabs with toothed profile are fitted.

50.

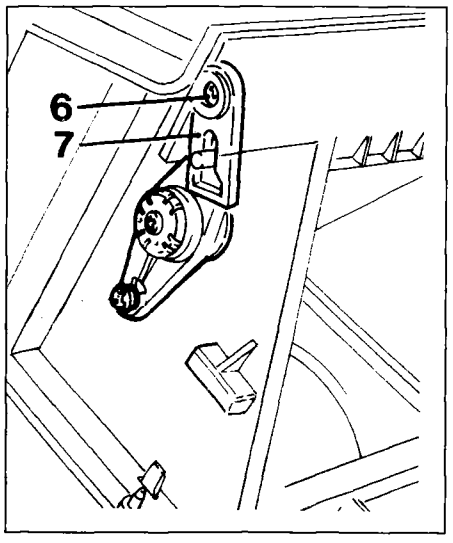

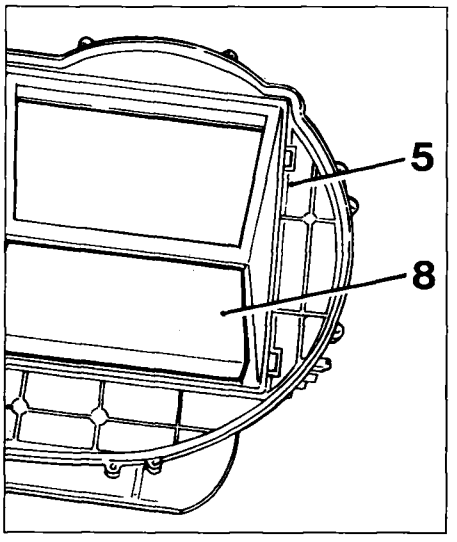

P4F070H02

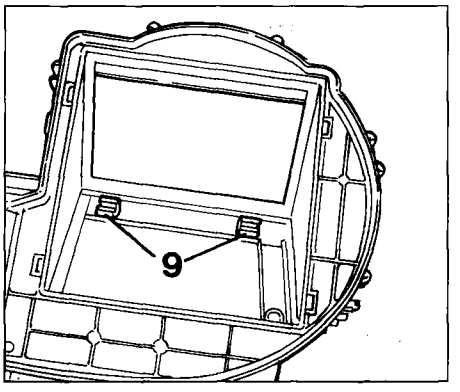

P4F070H03

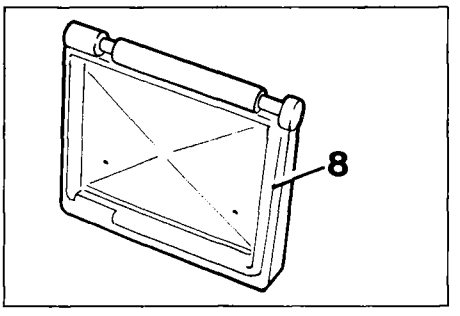

P4F070H04

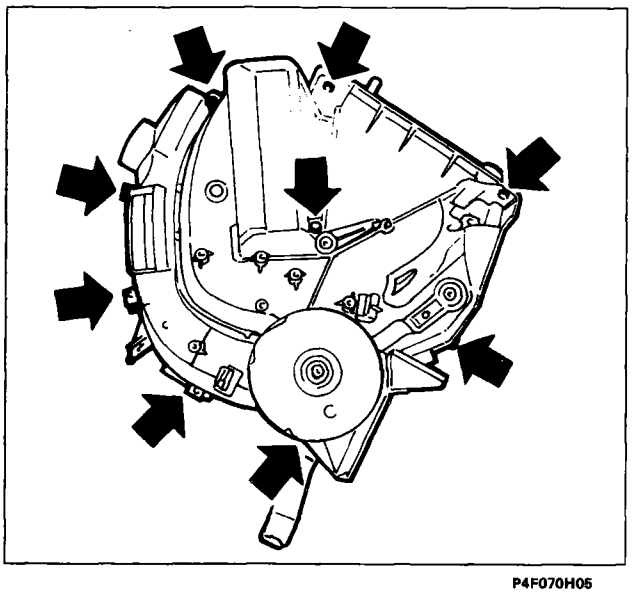

P4F070H05

- unscrew screw (6) and release lever (7) from the air intake flap spindle to which it is fitted in a fixed position;
- release the air intake flap (8) from the upper shroud case half (5). Note that the spindle is press-fitted and pivots on tabs (9);
- unscrew the bolts indicated by the arrows, which join together the two heater distributor unit case halves;
- release the right hand case half (10) from the left hand half (11). Take care not to spoil the flaps;

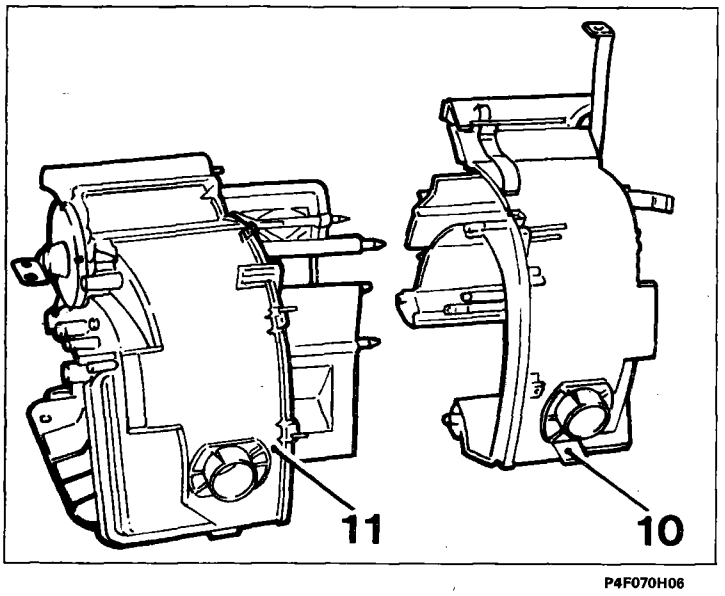

P4F070H06

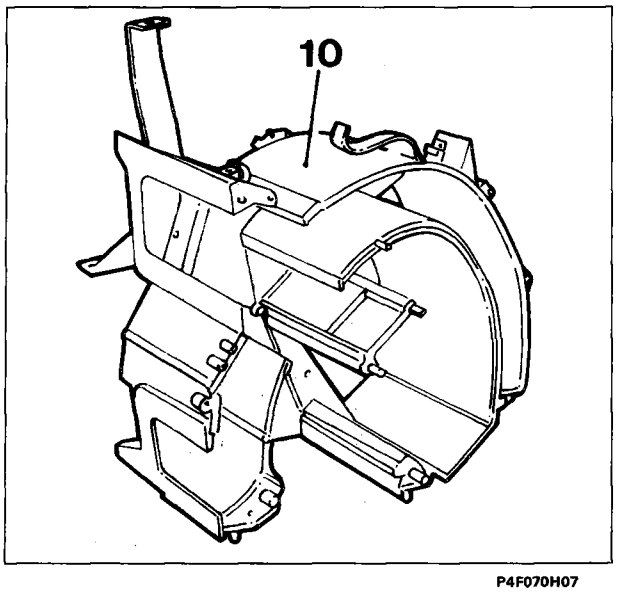

P4F070H07

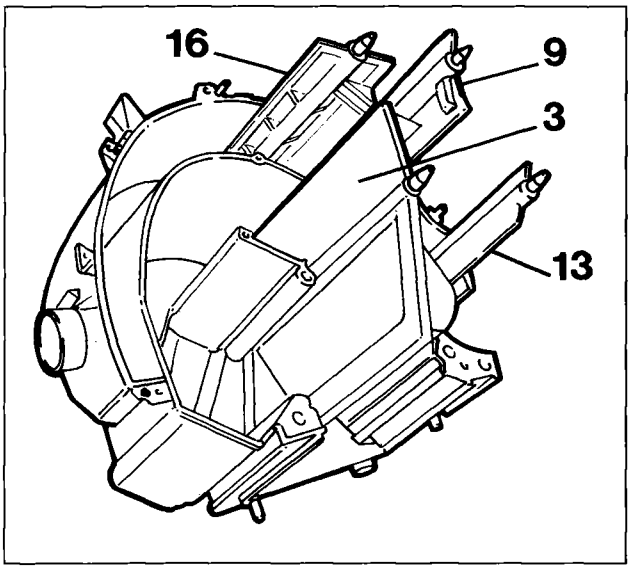

P4F071H01

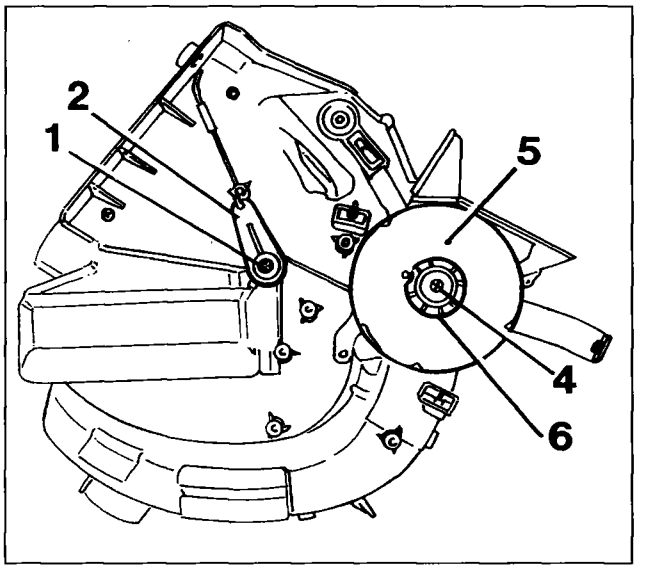

P4F071H02

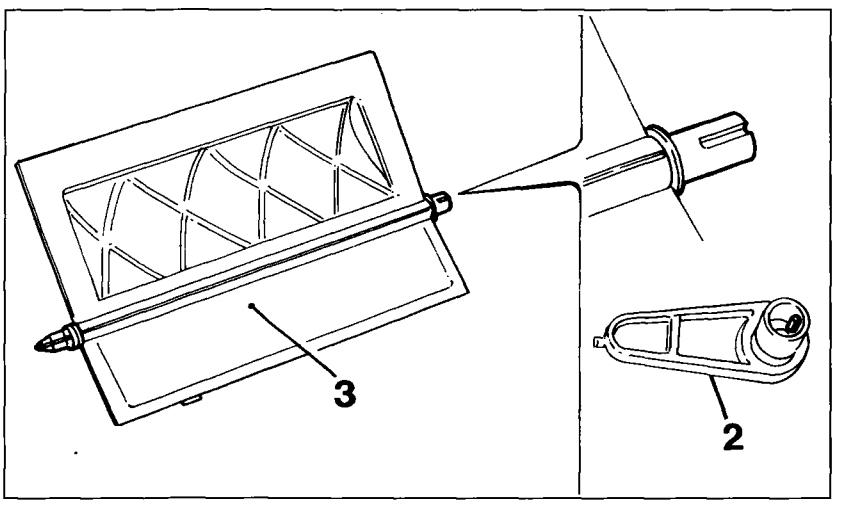

P4F071H03

- unscrew screw (1) and release lever (2), which is fitted in fixed position on the shaft of mixer flap (3) by means of a tooth which acts as a key (see central figure) and release the flap from the left case half;

- unscrew screw (4) retaining distributor disc (5) to the left case half and take care not to lose moulded plastic washer (6);

- unscrew screw (7) and release lever (8), which is fitted in fixed position (as described for the mixer flap) on the lower upper distributor flap (9) and release the flap from the left case half;

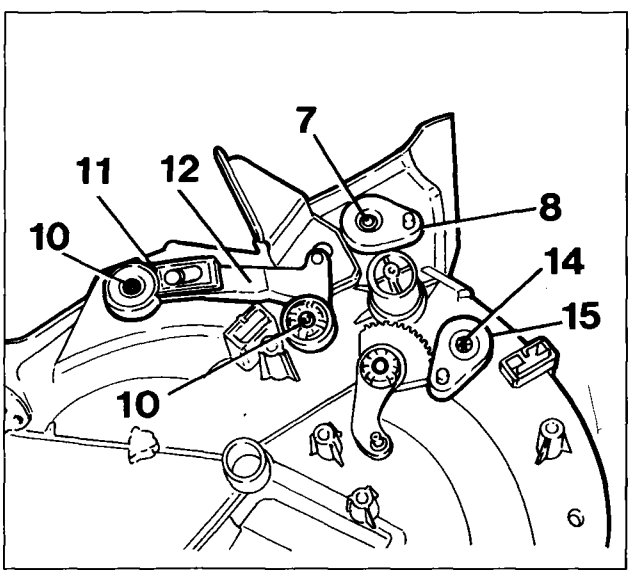

P4F071H04

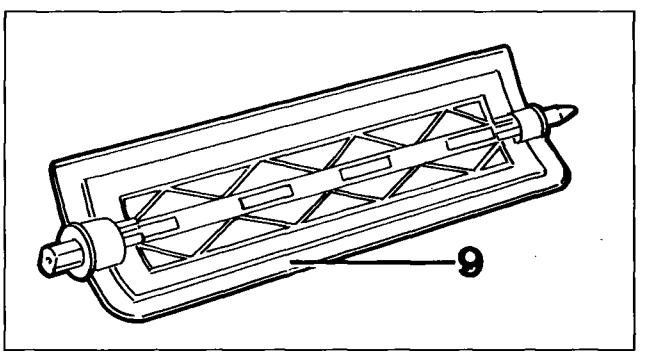

P4F071H05

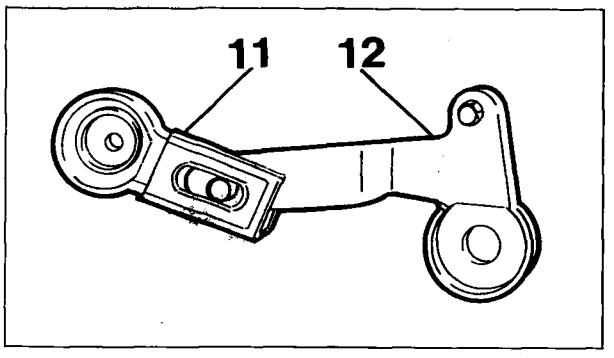

P4F072H01

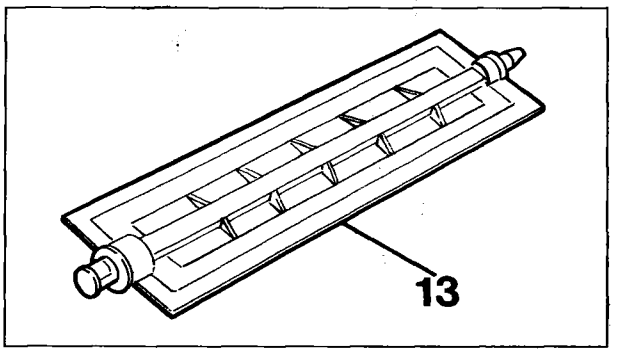

P4F072H02

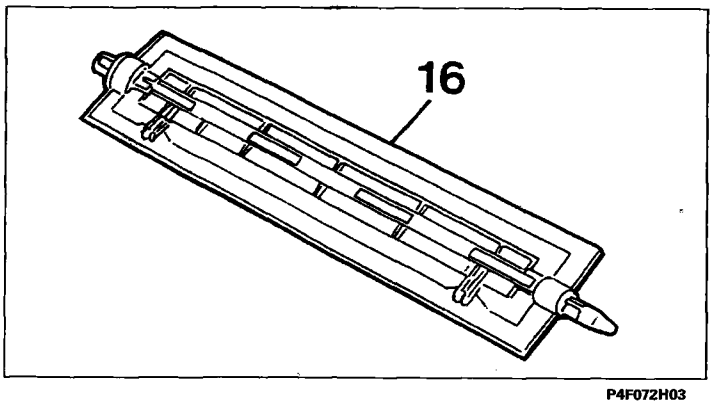

P4F072H03

- unscrew bolts (10) and disconnect lever (11) (with control lever 12) which is fitted in fixed position (as described for the mixer flap) on the upper front distributor flap spindle (13) and release the flap from the left case half;

- unscrew screw (14) and disconnect lever (15) (similar to lever 8) from the spindle of lower distribution flap (16) and release the flap.

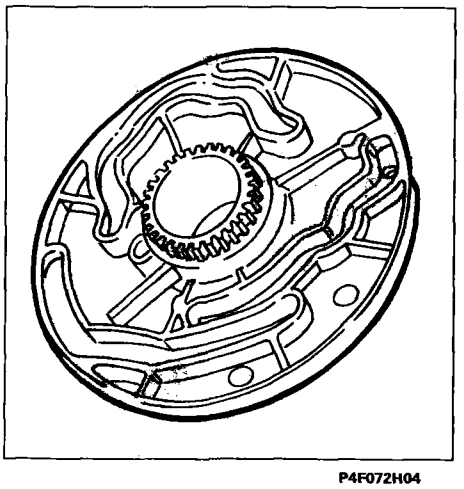

P4F072H04

Assembly and refitting

Carry out dismantling and removal instructions in reverse order and observe the following points.

Before refitting the distributor disc (figure alongside), thoroughly grease the lever operating splines using TUTELA ZETA 2.
Position the levers so that their operating pins (arrowed) are aligned with the holes on the distributor disc when the disc is correctly fitted to toothed sector (18), i.e. when the ridge on the sector fits into the disc hole.

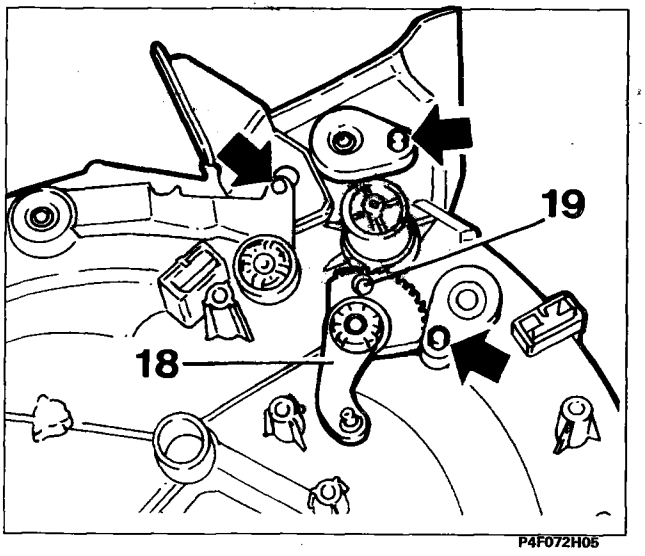

P4F072H05

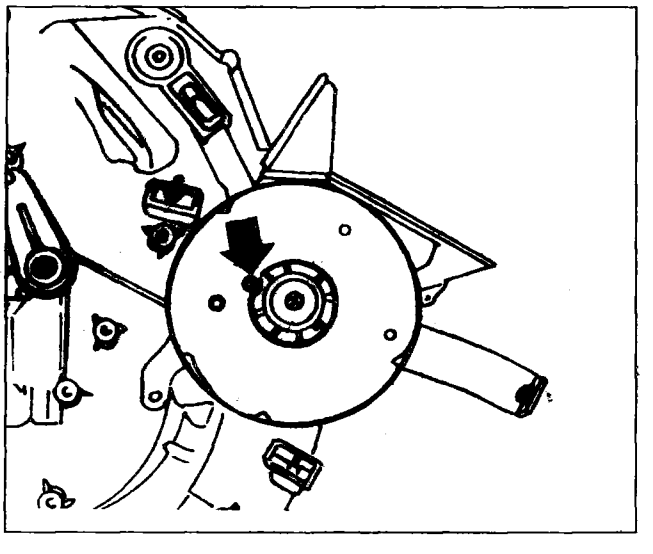

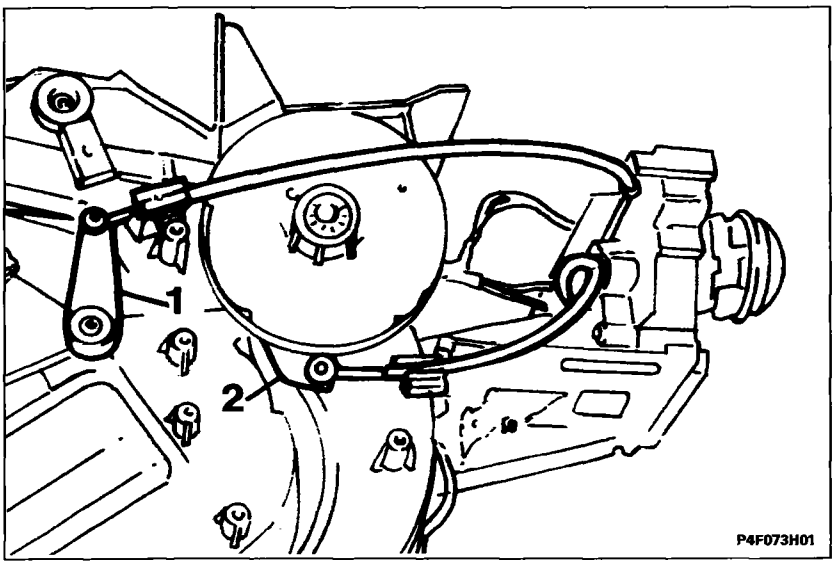

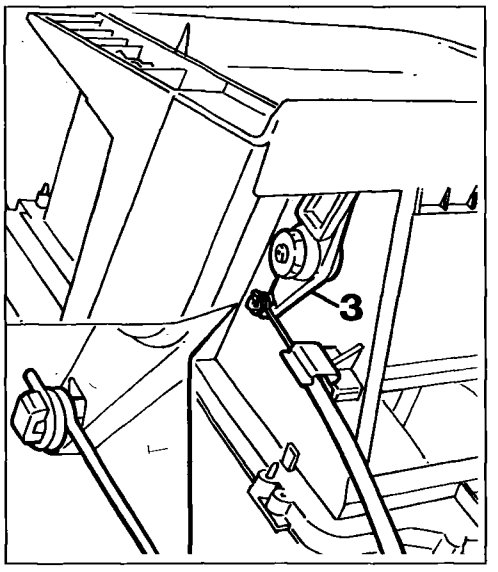

P4F073H02

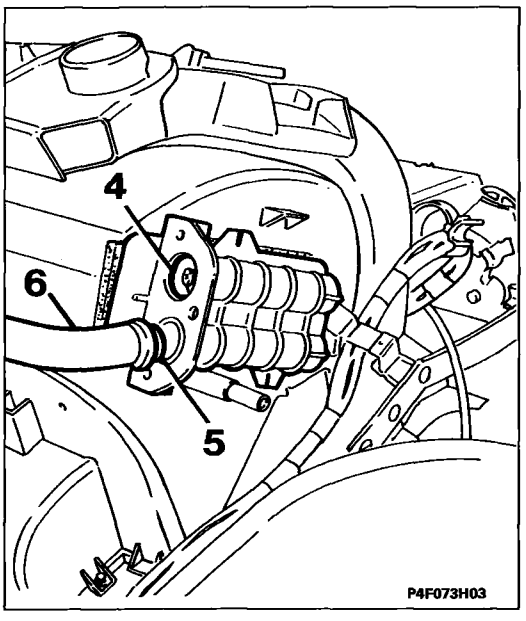

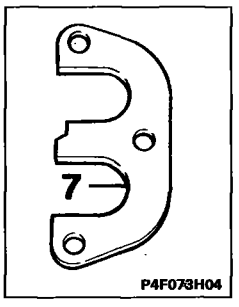

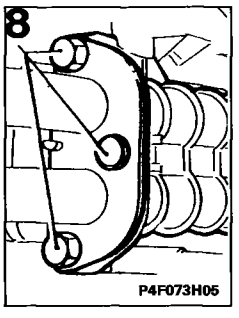

After fitting the coiled eyes at the end of the cables to the pins of levers (1 - 2 and 3), ensure the cable sheaths are fastened to the distributor heater assembly by means of clips so that the flaps move throughout their full travel.

Before fitting the two metal pipes (6) into the heater radiator spliit fitting, check that tapered metal rings (5) are fitted onto their ends and that o-rings (4) are fitted inside the seats.

After fitting the above pipes inside the heater radiator split fitting, secure by means of plate (7), (positioned as shown in the figure) and bolts (8). Take care not to spoil the sealing rings.

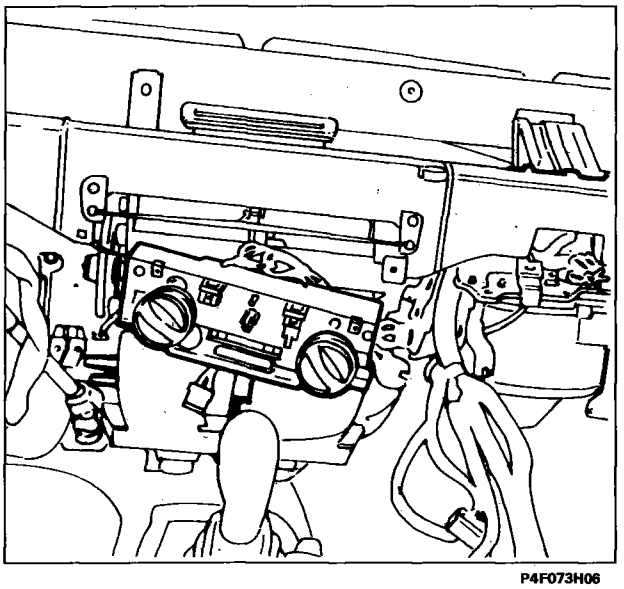

P4F073H06

CONTROL SUPPORT ASSEMBLY

Removing

- remove the facia trim (see Group 70).

Detail of control support assembly without the instrument facia

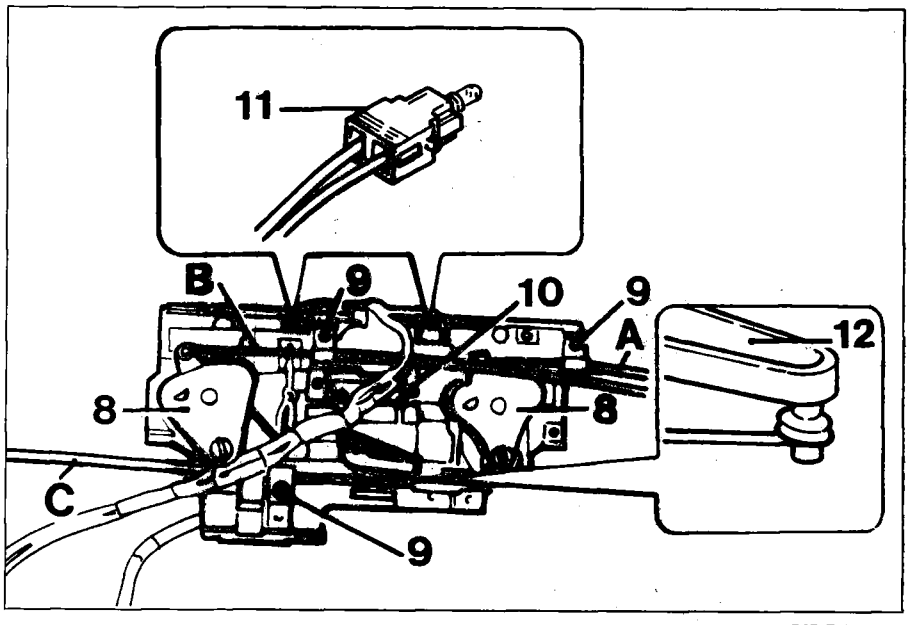

P4F074H01

- unscrew bolts (9) which secure the retaining plates of the three cable sheaths (A-B-C) and release the cables from toothed sectors (8) and lever (12);

- disconnect supply lead connector (10) from the passenger compartment fan speed switch supply lead and release the two bulb holders (11) from the mount;

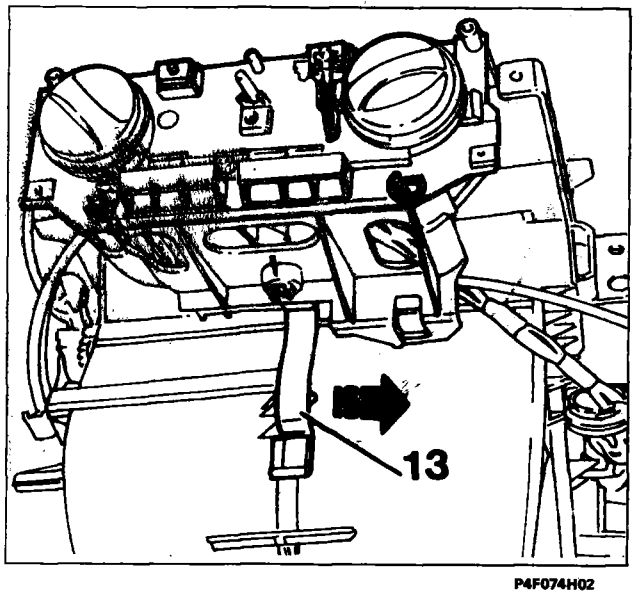

P4F074H02

- move spring (13) retaining the control support sideways in the arrowed direction to remove it from its seat on the distributor heater assembly;

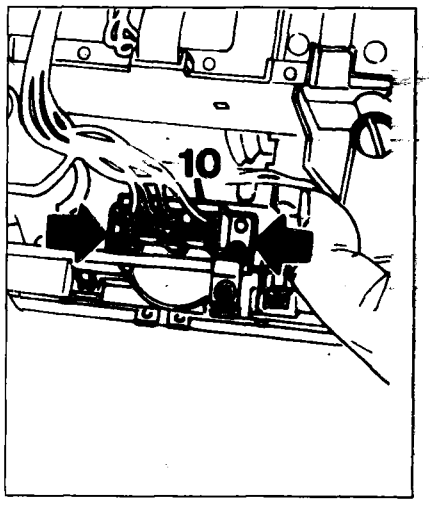

- unscrew both bolts arrowed in the first lower figure, which retain speed switch (14) of the passenger compartment fan to the control mount and remove the fan from the assembly.

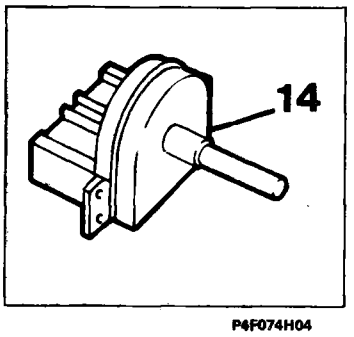

P4F074H04

Assembly and refitting

Rerverse dismantling and removal instructions to rebuild and refit.

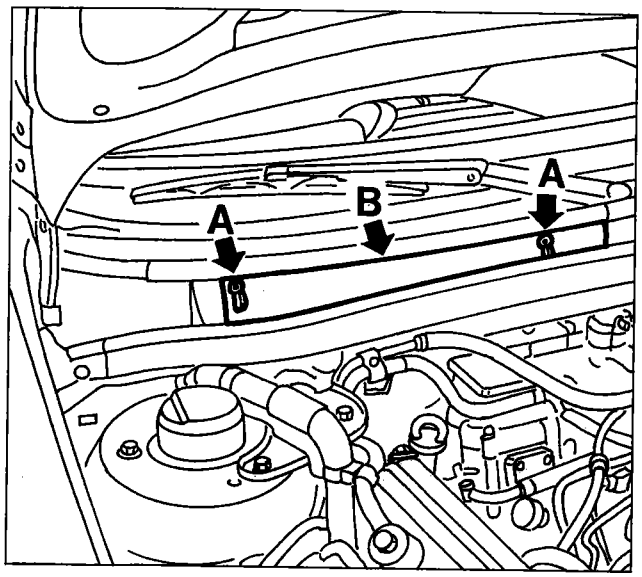

P4F075H01

REMOVING-REFITTING POLLEN FILTER

- Open the bonnet lid.
  Unscrew bolts (A) and remove pollen filter cover (B).

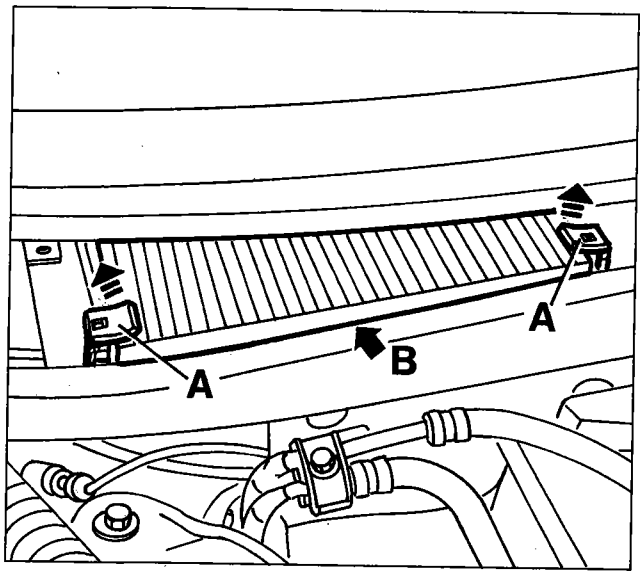

P4F075H02

- Undo both retainers (A) and remove the pollen filter (B) from its housing.

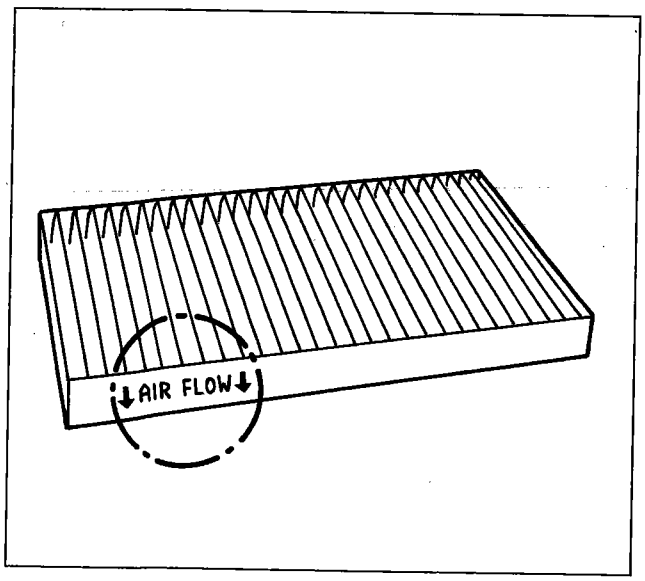

P4F075H03

NOTE *Reverse order of removal operations to refit. Fit the pollen filter with the stamped arrows facing in the direction of air flow (i.e. downward).*

page

PROTECTION AND SAFETY DEVICES
- Protection and safety devices 1

LOCATION OF COMPONENTS ON VEHICLE
- Location of relays and fuses on vehicle 2/2
- Location of control units and diagnostic sockets 4/2
- Location of earth points on vehicle 7

JUNCTION UNIT
- Junction unit 9
- Diagram showing junction unit internal connections 10
- List of fuses and main circuits protected 11
- Description of cables and connectors 12
- Junction unit 14

INSTRUMENT PANEL
- Instrument panel for SX trim level 15
- Instrument panel for ELX, HLX trim levels 16
- Warning lights 17
- Connections for instrument panel 18
- Check Panel 19
- "Intelligent" indicators 20
- Replacing bulbs 20
- Removing-refitting 21

LIGHTING
- Polyeliptical headlamps 22
- Front light cluster with direction indicator 24
- Replacing front light cluster bulbs 25
- Fog lamps 26
- Headlamp alignment 28
- Rear light cluster 29
- Additional brake light 31
- Number plate lights 32
- Side direction indicator 33
- Courtesy lights 33

SERVICES CONTROL UNIT
- Integrated services electronic control unit 37
- Operation of electric front windows 38
- Door locking/unlocking 38
- Doors and windows central unlocking/locking 39
- Door unlocking/locking remote control 39
- Receiver 39/1
- Simplified programming 39/1
- Protected programming 39/2
- Opening memory and programming a new remote control 39/2
- Passenger compartment timed lighting 40
- Luggage compartment timed lighting 40
- Heated rear windscreen timed operation 40
- Removing-refitting services control unit 41
- Removing-refitting door lock 42

ELECTRIC REAR WINDOWS
- Operation of electric rear windows 43
- Removing-refitting electric rear windows control unit 44

page

VARIOUS DEVICES
- Removing-refitting windscreen wiper motor 45
- Removing-refitting rearscreen wiper motor 47
- Removing-refitting tailgate lock operating motor 47
- Removing-refitting windscreen/rearscreen electric washer pump 48
- Removing-refitting electric headlamp washer pump 48
- Removing-refitting windscreen washer fluid reservoir 49
- Steering column switch unit 51
- Description of cables and connectors 53
- Ignition switch 55
- Brake lights switch 57
- Removing-refitting reversing lights switch 57
- Removing-refitting cigar lighter 58
- Removing-refitting horns 58
- Removing-refitting external rear view mirror 59
- Removing-refitting radiator fan 60

RADIO EQUIPMENT
- **AD 185M radio cassette player** 61
- Description of operation of AD 185M model radio 63
- Switching on radio 63
- Adjusting the volume 63
- Adjusting the tone 63
- Adjusting the balance 63
- Selecting the frequency range 64
- Automatic search tuning 64
- Manual search tuning 65
- Manually programming a station 65
- Listening to a programmed station 66
- Automatic programming of 5 stations on the FM-RDS band (Autostore) 66
- Audio cassette player 67
- Audio cassette tape fast forward 68
- Audio cassette tape rapid rewind 68
- Autoreverse function 69
- Equalizing 69
- Clock function 69
- Display information 71
- Care and maintenance 71
- **AD 185H radio cassette player** 72
- Description of operation of AD 185H model radio 75
- Switching on radio 75
- Selecting radio/audio cassette/compact disc function 75
- Pause function 76
- Adjusting the volume 76
- Adjusting the tone 76

Cont' ☞

Copyright by Fiat Auto

page
- Adjusting balance 77
- Adjusting fader 77
- Loudness function 78
- Mute function 78
- Radio function 79
- RDS function 80
- Audio cassette player 84
- Compact disc player function 88
- Operation of CD player 89
- Clock function 93

RADIO EQUIPMENT
- Anti-theft protection 95
- Controls on the steering wheel 97
- Technical data 97
- Location of radio system components 98
- Removing AD 185M radio 99
- Removing AD 185H radio 100
- Refitting radio 101
- Replacing radio 101
- Opening/closing cassette console flap 102
- Removing-refitting speakers 104
- Removing-refitting radio aerial cable 108

FIAT CODE
- Introduction 109
- Location on vehicle of system components 109
- Procedure for programming keys with pristine system 112
- Procedure for re-programming keys 112
- Emergency starting procedure 113
- Fiat CODE wiring diagram 114
- Removing-refitting Fiat CODE control unit 116
- Removing-refitting Fiat CODE aerial 116
- Replacing transponder 117

ALARM
- Location of alarm system components 119
- Introduction 120
- Alarm control unit 120
- Alarm siren 120
- Receiver 121
- Remote control 122
- Emergency switch with key 122
- LED 122
- Volumetric sensors 122
- Operation 123
- Programming 124
- Simplified programming 125
- Closing the memory 126
- Protected programming 127
- Opening the memory and programming a new remote control 127
- System autodiagnosis 128
- Manual diagnosis 129
- Fault diagnosis using diagnostic equipment 129
- Signals entering and leaving the alarm control unit 130

page
- Control unit wiring diagram 131
- Removing-refitting receiver in courtesy light 132
- Removing-refitting alarm control unit 132

AIR BAG AND PRE-TENSIONERS
- Introduction 133
- Driver's air bag module 134
- Inflation device 135
- Clock spring 135
- Passenger air bag module 136
- Pre-tensioners 137
- Electronic control unit 138
- Air bag warning light 142
- Duration of system components 143
- Autodiagnosis 143
- Fault diagnosis 143
- Wiring diagram 145
- Operations on vehicle 146
- Dangers to health 149
- Effects of over exposure 149
- Safety instructions for handling Air Bag modules 149
- Disposing of air bag modules 151
- Safety instructions for handling pre-tensioners 151
- Removing-refitting driver's Air Bag 153
- Removing-refitting clock spring 154
- Removing-refitting passenger Air Bag 156
- Replacing passenger Air Bag cover 157
- Removing-refitting air bag control unit 158
- Removing-refitting pre-tensioners 160

RECHARGING
- Battery 162
- Alternator 162

STARTING
- Starter motor 175

LIGHTING
- Electric headlamp alignment 187

PROTECTION AND SAFETY DEVICES

All the vehicle power lines are designed and constructed to the most up-to-date safety and protection standards, particularly in terms of fire protection.

Two main types of protection are adopted:
- **active protection**, designed to reduce possible causes of faults at source;
- **passive protection**, designed to minimise the effects of faults if they arise.

The first category includes careful design of wiring, wire position and anchorage inside specially shielded and protected cableways.
Wires connected to the alternator and motor have been modified through the adoption of protective caps etc. A shielded sheath has also been adopted for some particularly exposed sections of wiring.

The passive protections include all interventions, invariably adopted on vehicles, to reduce high fault currents (overloads and short-circuits).
All fuses in the system are designed on the basis of rated uptake if all services are activated at the same time, and in order to cut in if the whole system short circuits.

Through the adoption of a **box containing four maxi fuses**, plus other external fuses, it is possible to **protect** all **power sources**, with the sole exception of the lead connecting the battery to the starter motor, and the lead connecting the starter motor to the alternator. The alternator leads are protected by an extra armoured sheath.

Inside fuse box "MAXI" **A**:

EFI: electronic injection fuse (petrol)
GLOW: glow plug fuse (diesel)
IGN: ignition switch fuse
J/B2: general supply fuse
J/B1: general supply fuse

next to the box:

B: fan fuse (see table)
C: ABS fuse: 60A
D: second fan fuse: 40A (for all TD engines, except 1910-100 without air conditioner)

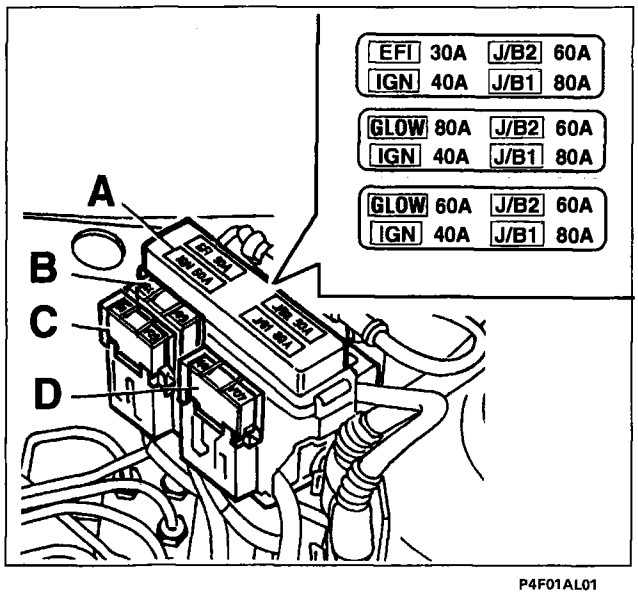

P4F01AL01

all
petrol
engine versions

2387 TD

1910 TD

FUSE B	
30A	petrol engine without air conditioner
40A	1370, 1581, 1910-100 with air conditioning, 2387, 1910-75
50A	1910-100 without air conditioner, 1747, 1998 with air conditioning

55.

Main power source wiring diagram (petrol engines)

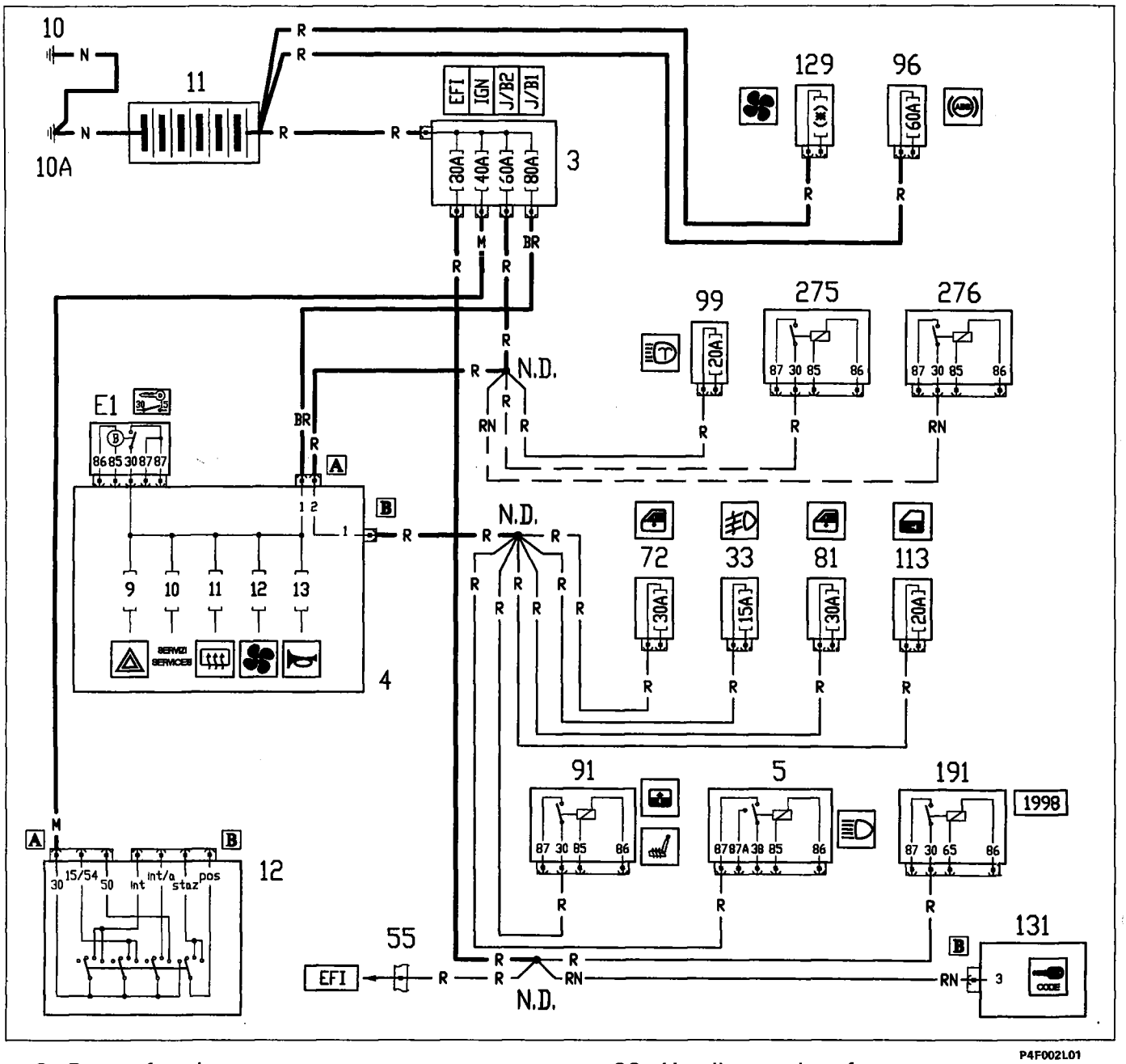

3. Power fuse box
4. Junction unit
5. Dipped beam relay
10. Battery earth on engine
10A. Battery earth on body shell
11. Battery
12. Ignition switch
33. Fog lamp fuse
55. Front cable/engine connection
72. Front electrically-operated window fuse
81. Rear electrically-operated window fuse
91. Power relay operated by ignition key
96. ABS power fuse.
99. Headlamp wiper fuse
113. Door lock fuse
129. Engine cooling fan power fuse
131. Fiat CODE electronic control unit
191. Timing variator control relay
274. Automatic transmission system fuse
275. Automatic transmission fluid radiator fan relay
276. Starter enablement relay

(*) See table on previous page
--- 1581 with automatic transmission

Main power source wiring diagram (diesel versions)

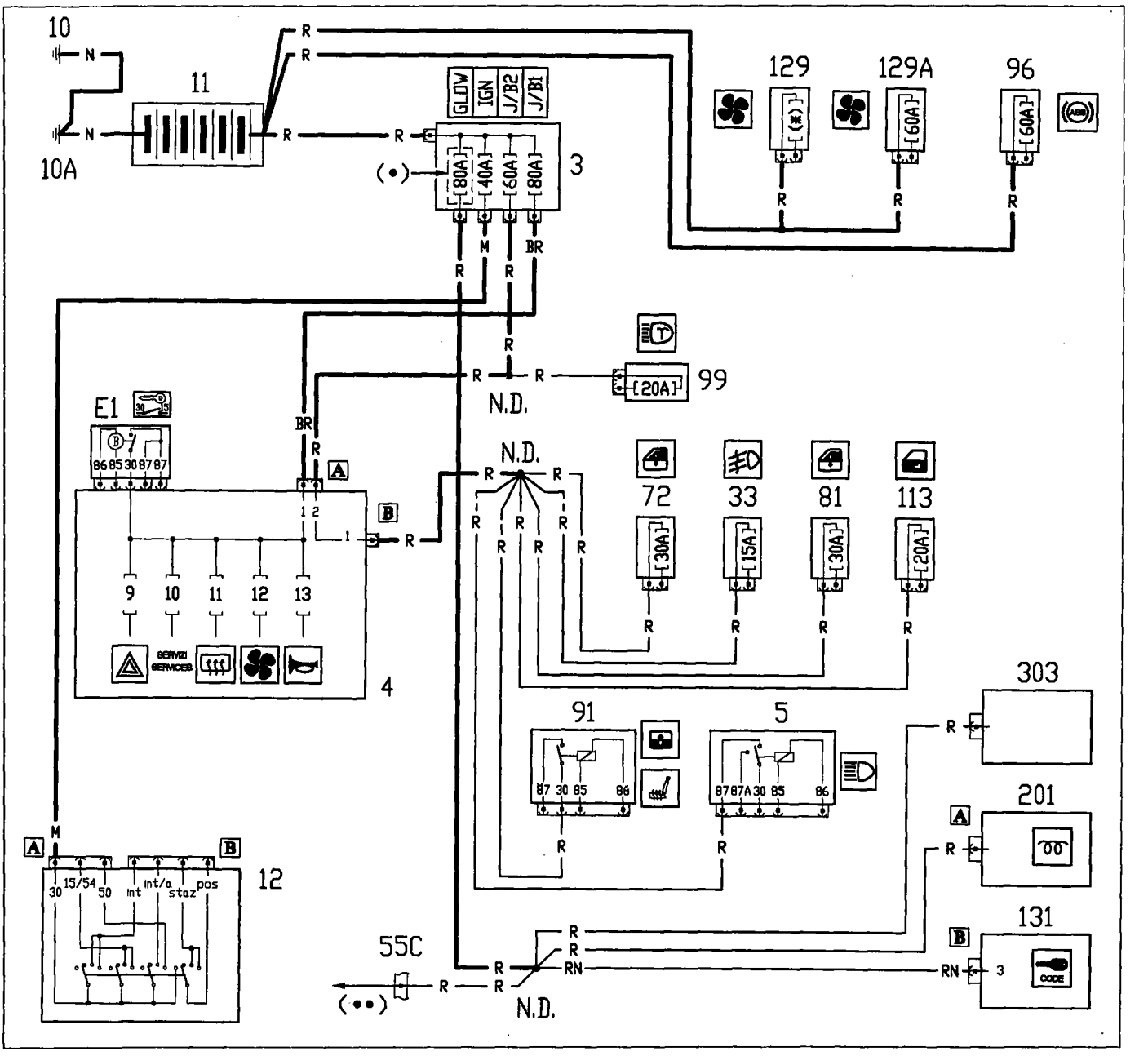

P4F201L01

3. Power fuse box
4. Junction unit
5. Dipped beam relay
10. Battery earth on engine
10A. Battery earth on body shell
11. Battery
12. Ignition switch
33. Fog lamp fuse
55C. Front cable/engine connection
72. Front electrically-operated window fuse
81. Rear electrically-operated window fuse
91. Power relay operated by ignition key
96. ABS power fuse.
99. Headlamp wiper fuse
113. Door lock fuse
129. Engine cooling fan power fuse
129A. 2nd engine cooling fan power fuse
131. Fiat CODE electronic control unit
201. Glow plug control unit (TD)
303. Diesel preheating fuse (TD)
(*) See table on page 2
(●) 60A for 1910
(●●) except 1910-75

4F200L

55.

LOCATION OF RELAYS AND FUSES ON VEHICLE (ENGINE BAY - petrol engines)

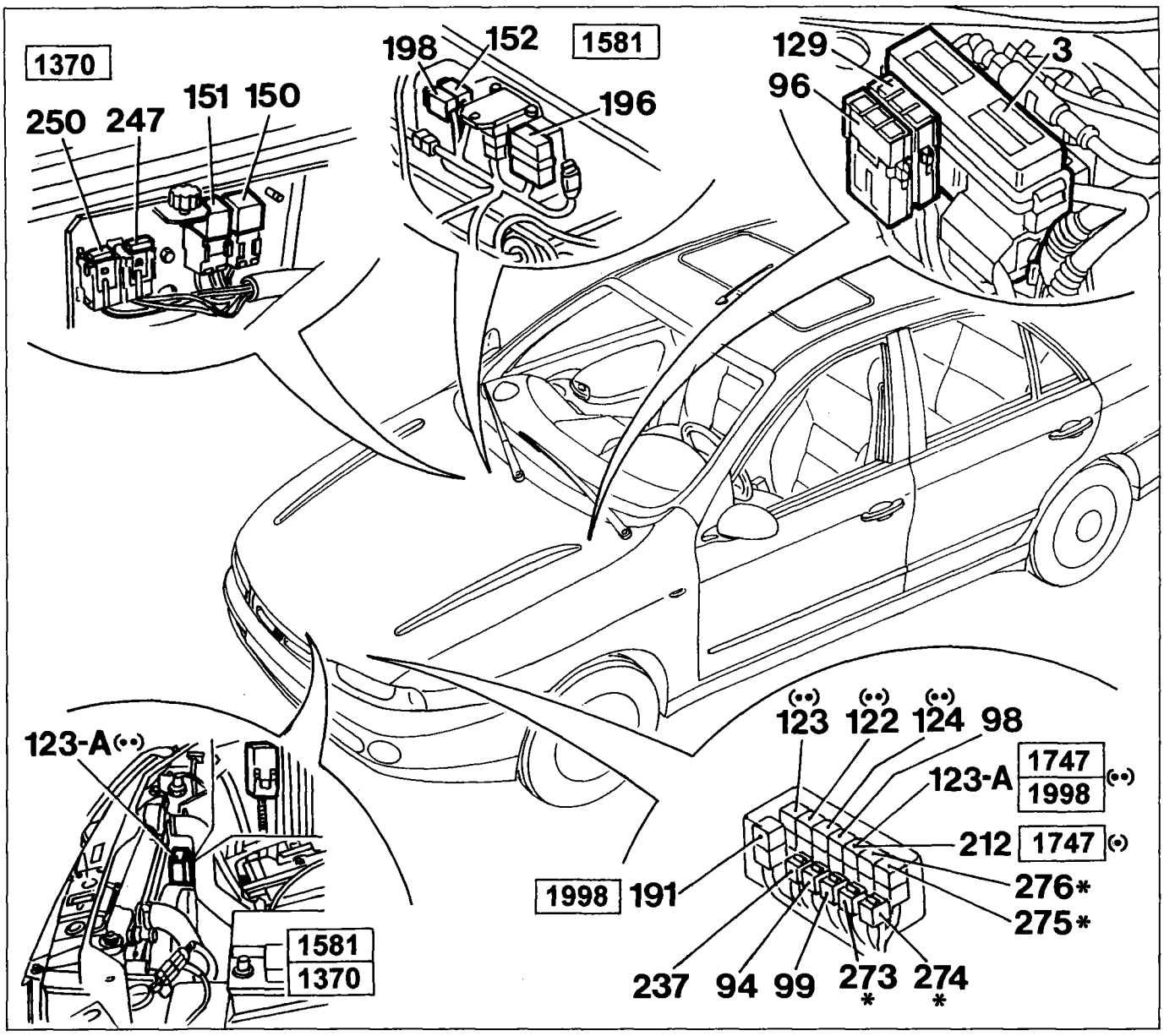

P4F003L01

3. Power fuse box
94. ABS fuse.
96. ABS system power fuse
98. Headlamp washer intermittent function
99. Headlamp wiper fuse
122. Engine cooling fan low speed relay
123. Engine cooling fan high speed timer
123A. Engine cooling fan high speed relay
124. Air conditioner compressor control relay
129. Engine cooling fan power fuse
150. Injection system control relay (1370)
151. Relay for lambda probe, fuel pump, injectors (1370)
152. Injection system fuse (1581)
191. Timing variator control relay (1998)
196. Multiple relay (1581)
198. Ignition/injection control unit fuse (1581)
212. Engine cooling fan relay
237. FIAT CODE fuse
247. Lambda probe fuse (1370)
250. Fuel pump fuse (1370)
273. Automatic transmission system fuse
274. Automatic transmission system fuse
275. Automatic transmission fluid radiator fan relay
276. Starter enablement relay
(●●) Versions with air conditioner
(●) Versions without Air conditioner
(*) 1581 with automatic transmission

4F201L

LOCATION OF RELAYS AND FUSES ON VEHICLE (ENGINE BAY - diesel versions)

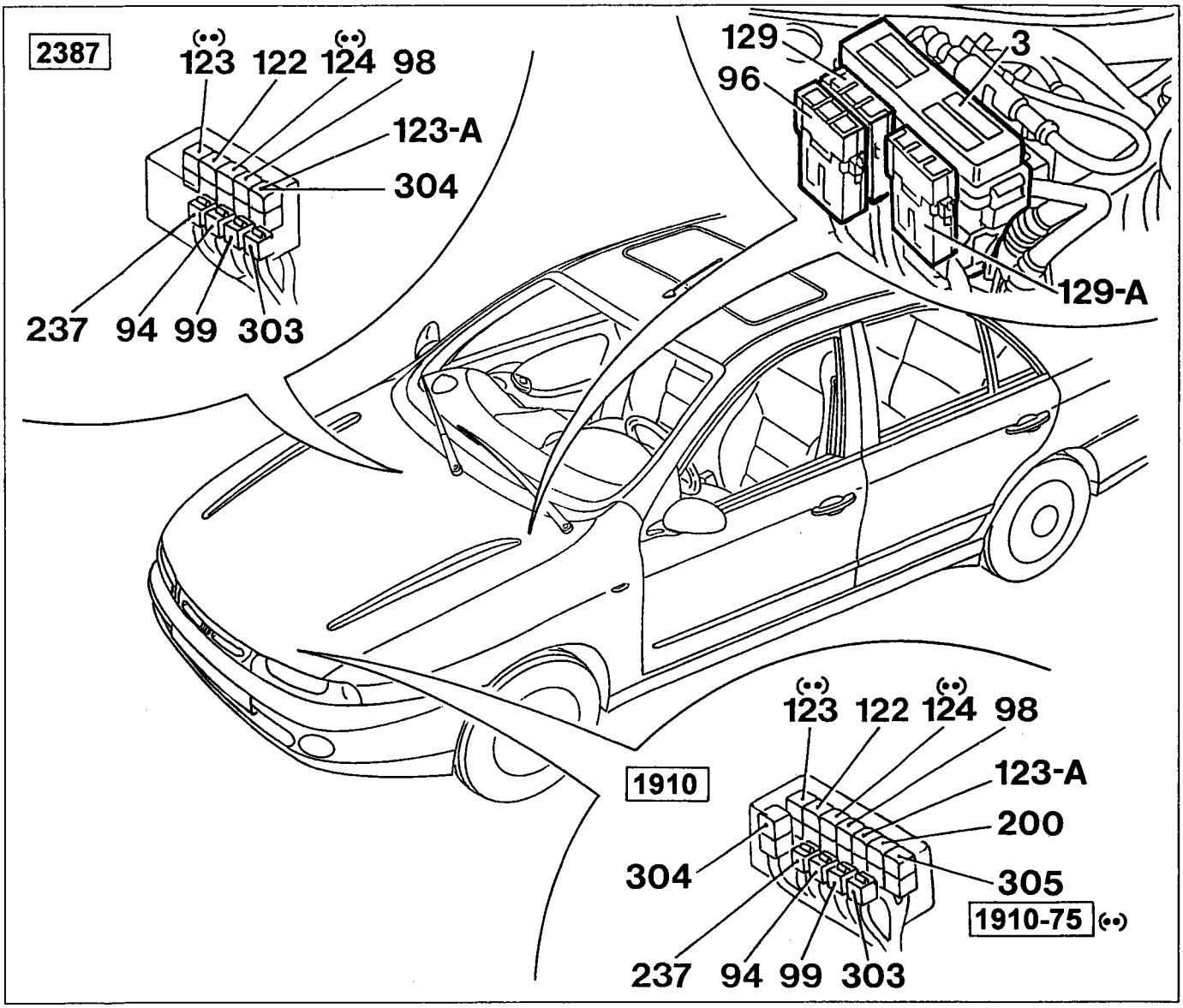

P4F203L01

3. Power fuse box
94. ABS fuse.
96. ABS system power fuse
98. Headlamp washer intermittent function
99. Headlamp wiper fuse
122. Engine cooling fan low speed relay
123. Engine cooling fan high speed timer
123A. Engine cooling fan high speed relay
124. Air conditioner compressor control relay
129. Engine cooling fan power fuse
129A. 2nd engine cooling fan power fuse
200. Stop solenoid relay (TD)
237. FIAT CODE fuse
303. Diesel preheating fuse (TD)
304. Diesel preheating relay (TD)
305. Compressor de-activation relay (1910 TD-75)
(●●) Versions with air conditioner

55.

LOCATION OF RELAYS AND FUSES ON VEHICLE (PASSENGER COMPARTMENT - petrol engines)

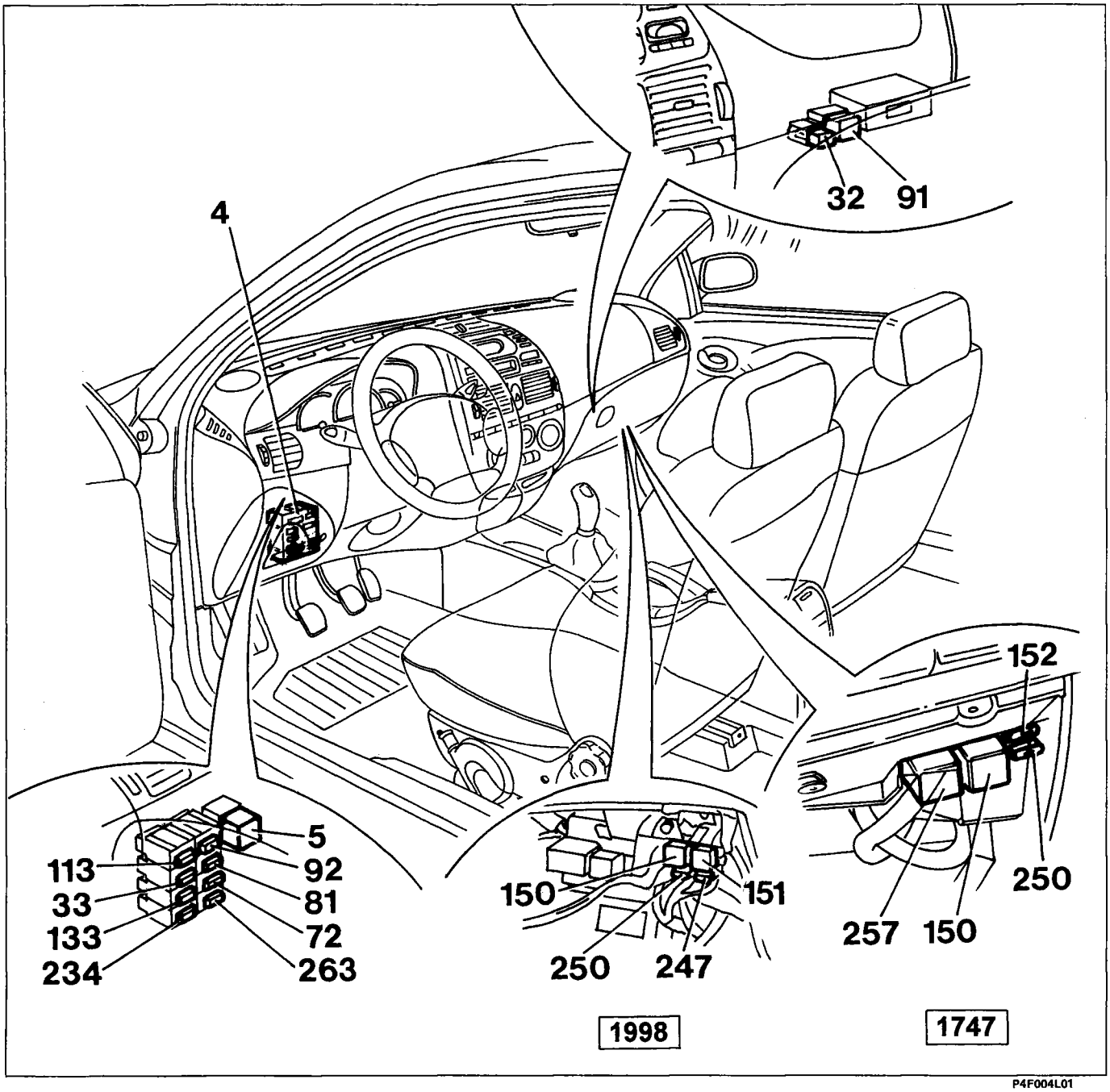

P4F004L01

4. Junction unit
5. Dipped beam relay
32. Fog lamp relay
33. Fog lamp fuse
72. Front electrically-operated window fuse
81. Rear electrically-operated window fuse
91. Power relay operated by ignition key
92. Electrically-operated sun-roof protection fuse
113. Door lock system fuse
133. Air bag system fuse
150. Injection system control relay (1747, 1998)
151. Relay for lambda probe, fuel pump, injectors (1998)
152. Injection system fuse (1747)
234. Door mirror demister fuse
247. Lambda probe fuse (1998)
250. Fuel pump fuse (1747, 1998)
257. Fuel pump relay (1747)
263. Heated seat fuse

LOCATION OF RELAYS AND FUSES ON VEHICLE (PASSENGER COMPARTMENT - diesel versions)

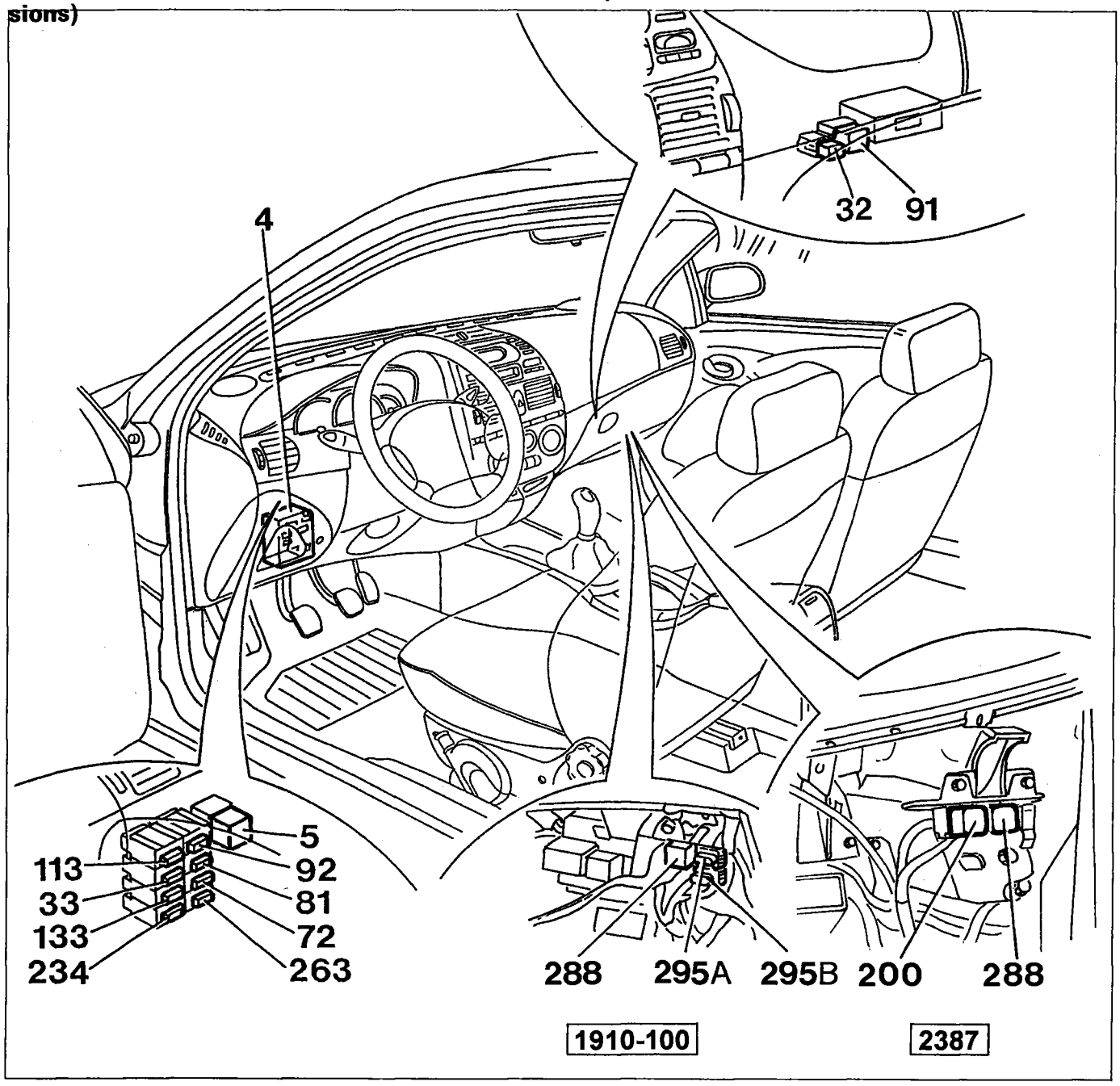

P4F205L01

4. Junction unit
5. Dipped beam relay
32. Fog lamp relay
33. Fog lamp fuse
72. Front electrically-operated window fuse
81. Rear electrically-operated window fuse
91. Power relay operated by ignition key
92. Electrically-operated sun-roof protection fuse
113. Door lock fuse
133. Air bag system fuse
200. Stop solenoid relay (TD)
234. Door mirror demister fuse
263. Heated seat fuse
288. Electronic injection control relay (TD)
295A. Injection system fuse (1910TD 100)
295B. Injection system fuse (1910TD 100)

4F202L

55.

LOCATION OF CONTROL UNITS AND TESTER SOCKETS (ENGINE BAY - petrol engines)

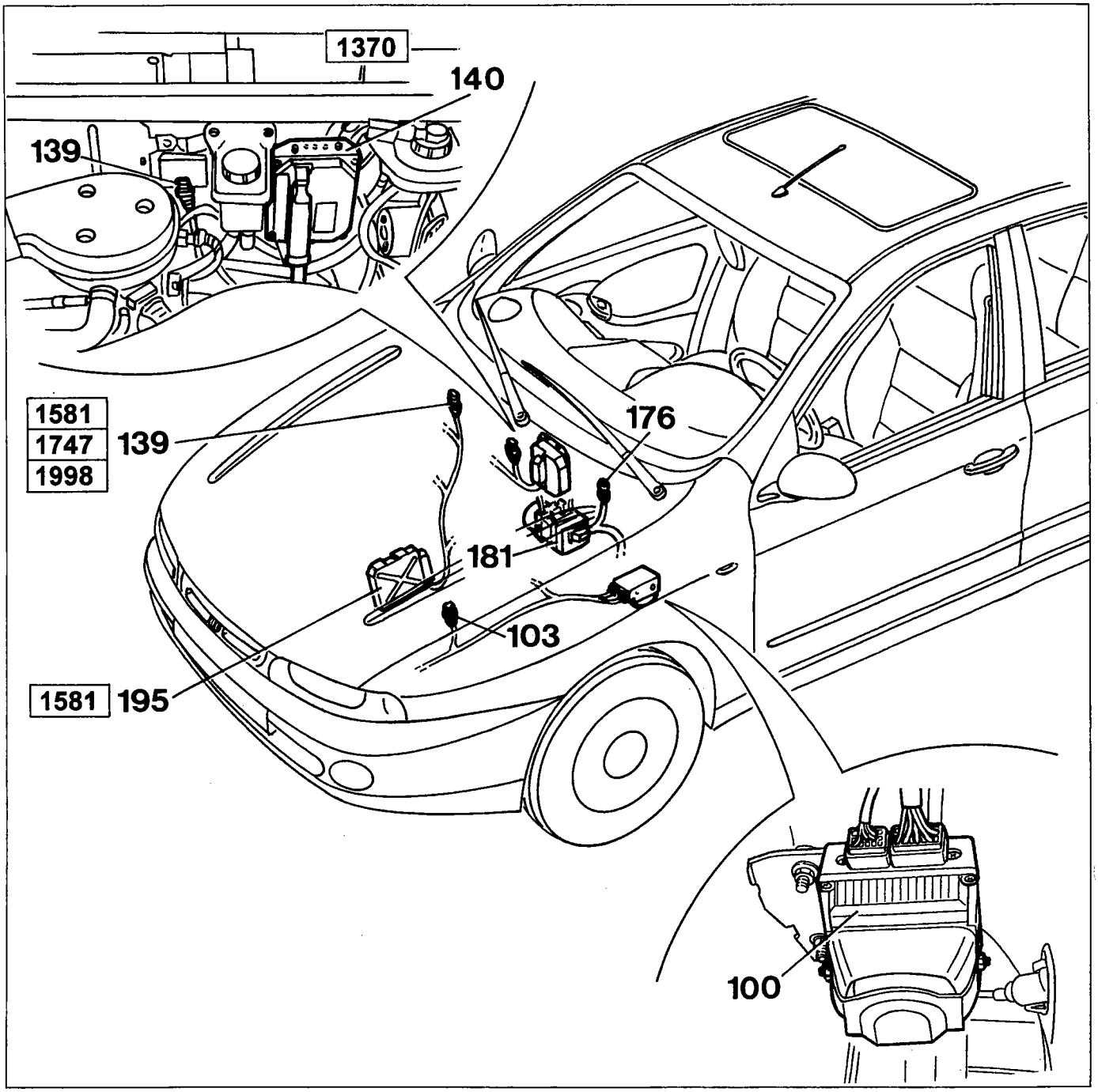

P4F005L01

100. Alarm electronic control unit
103. Tester socket for alarm
139. Tester socket for injection system
140. Injection/ignition control unit (1370)
176. Diagnostic socket for ABS device (A.B.S.)
181. Hydraulic control unit for anti-lock brakes (A.B.S.)
195. Ignition/injection electronic control unit (1581)

4F203L

LOCATION OF CONTROL UNITS AND TESTER SOCKETS (ENGINE BAY - diesel versions)

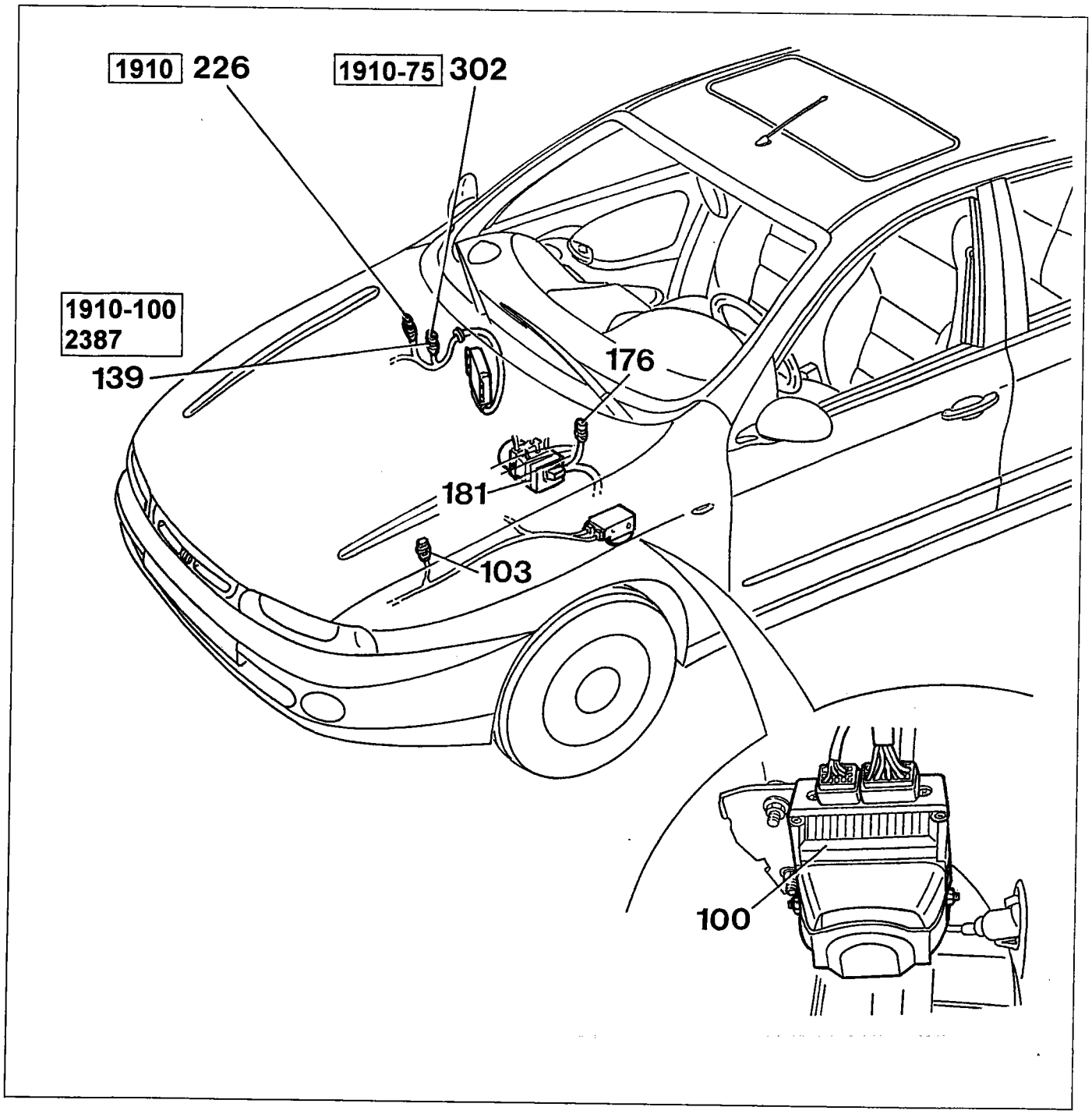

P4F207L01

100. Alarm electronic control unit
103. Tester socket for alarm
139. Tester socket for injection system
176. Diagnostic socket for ABS device (A.B.S.)
181. Hydraulic control unit for anti-lock brakes (A.B.S.)
226. Diagnostic socket for Fiat CODE system (1910TD)
302. Diagnostic socket for EGR system (1910TD-75)

Copyright Fiat Auto

LOCATION OF CONTROL UNITS AND TESTER SOCKETS (PASSENGER COMPARTMENT)

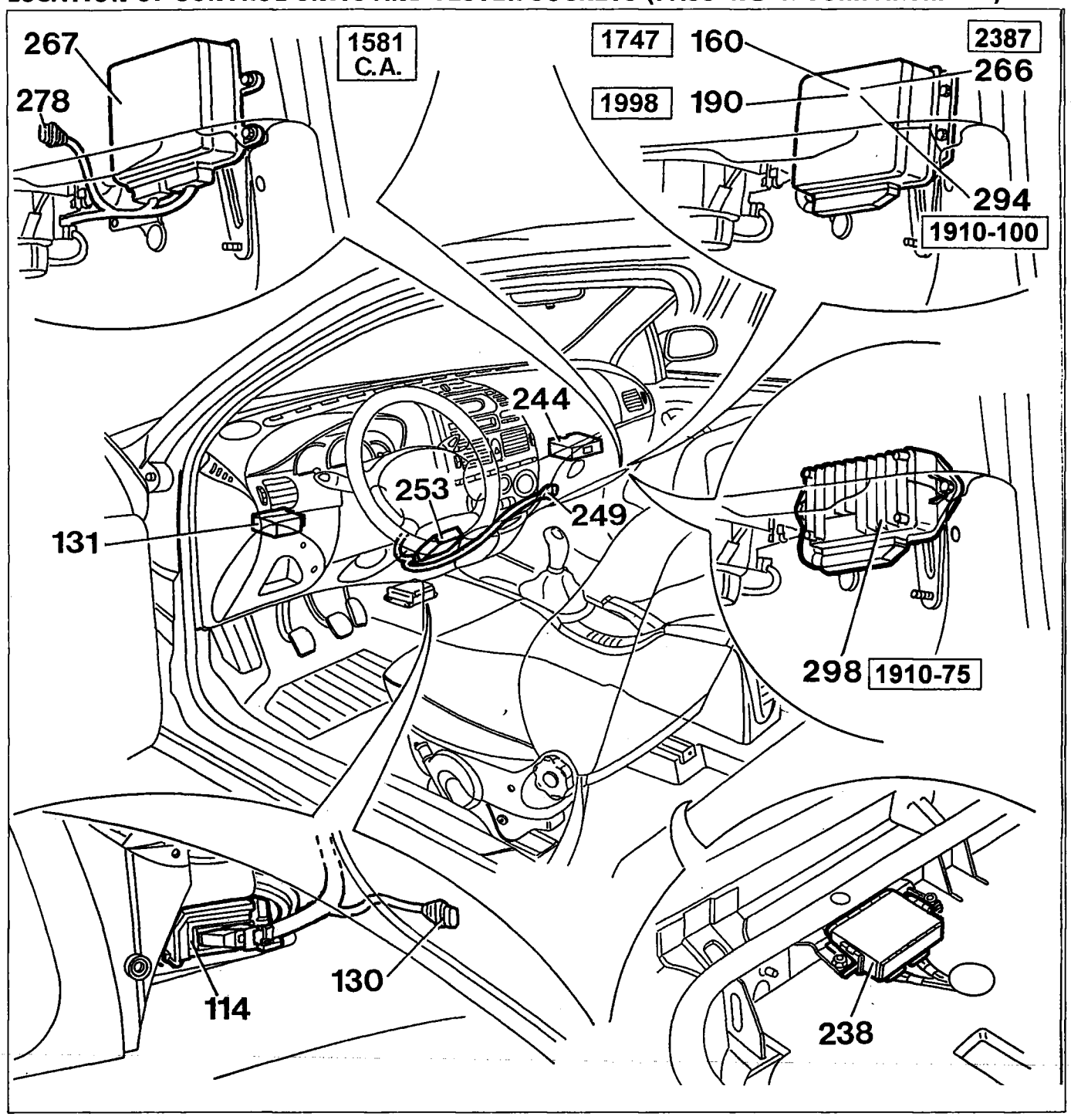

P4F006L02

114. Air bag electronic control unit
130. Tester socket for air bag
131. Fiat CODE electronic control unit
160. Ignition/injection electronic control unit (1747)
190. Ignition/injection electronic control unit (1998)
238. Rear electrically-operated window ECU
244. Integrated service electronic control unit
249. Air conditioner system tester socket
253. Air conditioner control unit
266. Injection electronic control unit (2387TD)
267. Automatic transmission control unit
278. Automatic transmission system tester socket
294. Injection electronic control unit (1910T-D-100)
298. EGR electronic control unit (1910TD-75)

LOCATION OF EARTH POINTS ON VEHICLE

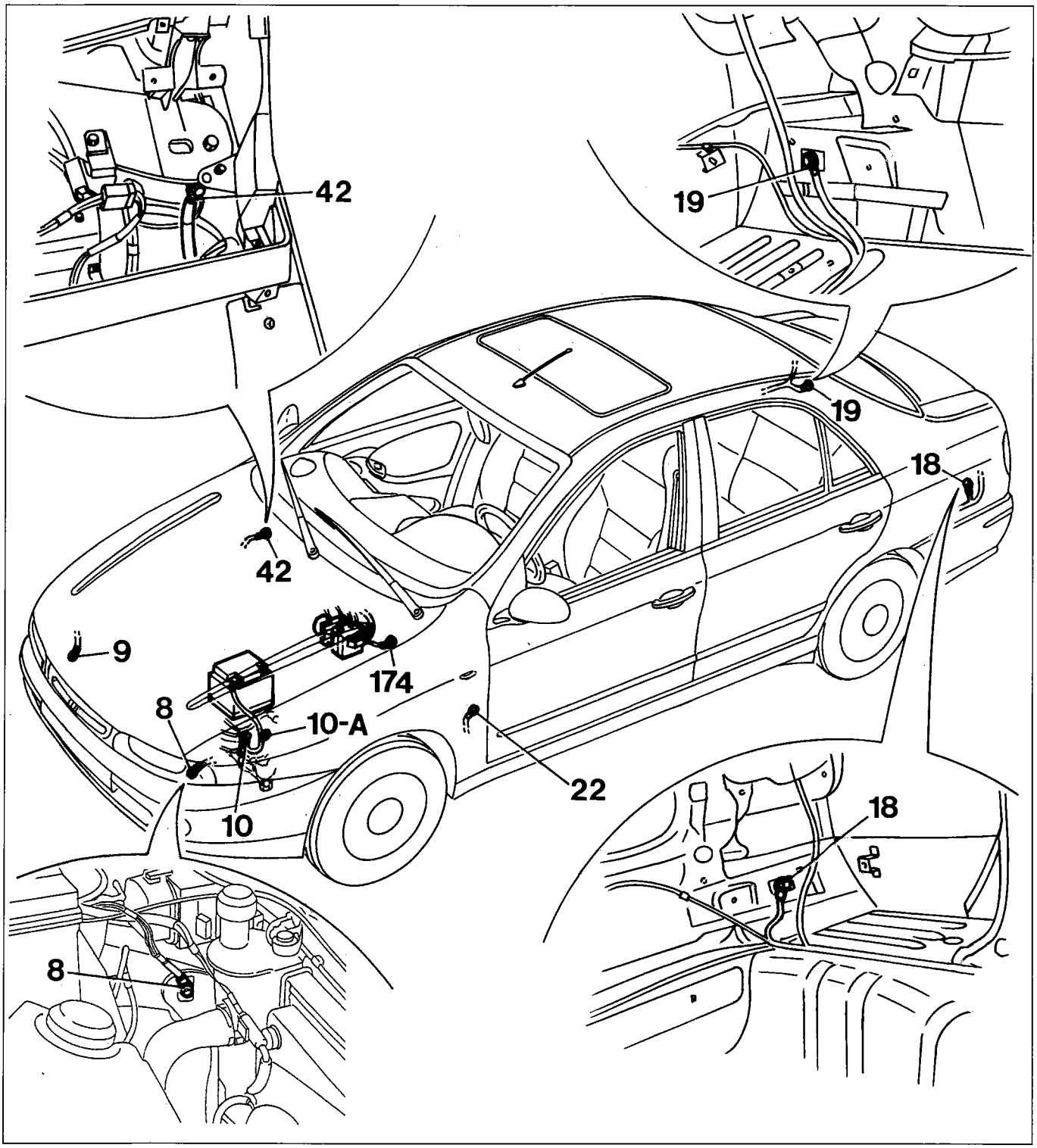

P4F007L01

8. Left front earth
9. Right front earth
10. Earth on engine
10A. Battery earth (on body)
18. Left rear earth
22. Left hand facia earth
42. Right hand facia earth
174. ABS earth.

NOTE *For engine earths, refer to Group 10 - Engine for the various engine versions.*

LOCATION OF EARTH POINTS ON VEHICLE

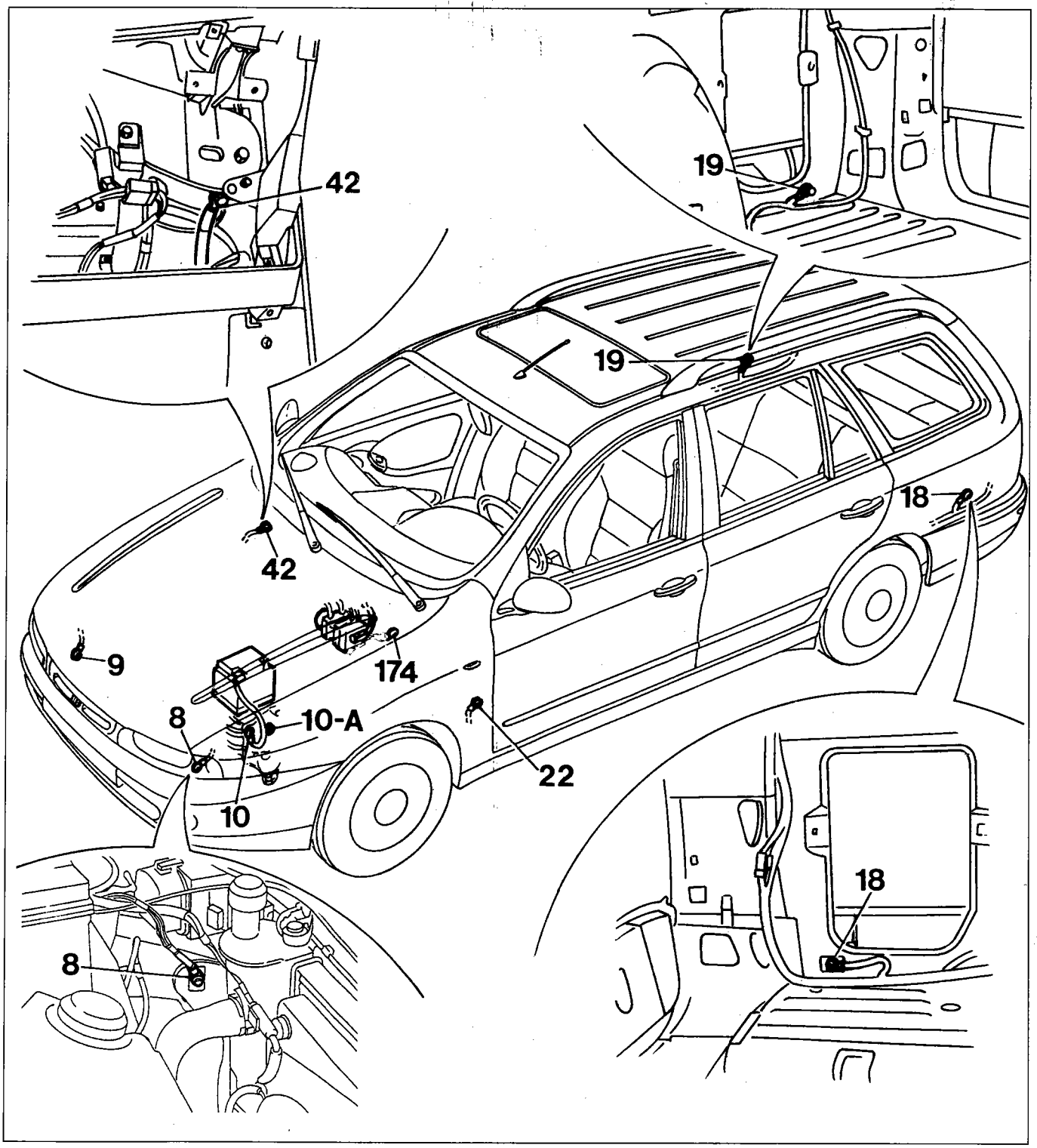

P4F008L01

8. Left front earth
9. Right front earth
10. Earth on engine
10A. Battery earth (on body shell)
18. Left rear earth
22. Left hand facia earth
42. Right hand facia earth
174. ABS earth.

NOTE *For engine earths, refer to Group 10 - Engine for the various engine versions.*

JUNCTION UNIT

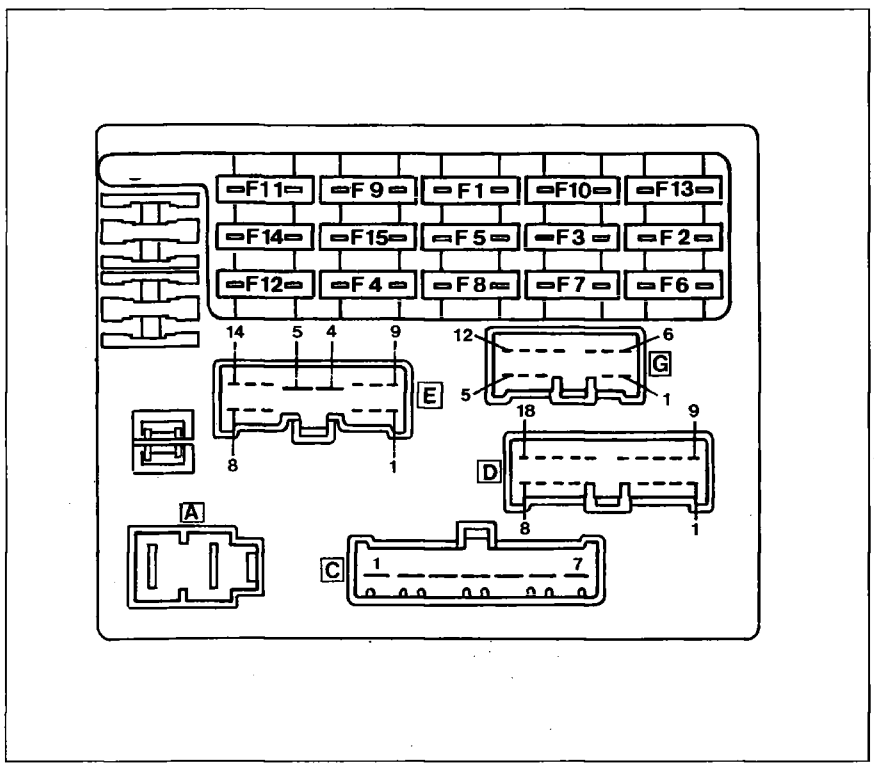

P4F02AL01

Front view of control unit and fuse location

The connectors cannot be connected incorrectly because each one is individually shaped. The same letters are used to identify the connectors as are adopted in the wiring diagrams.

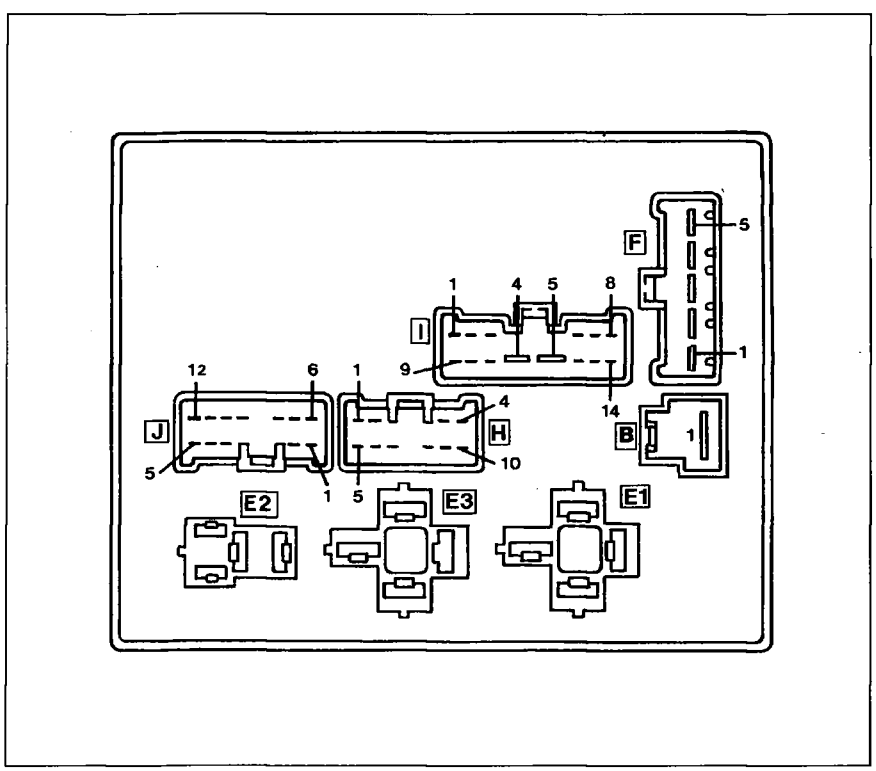

P4F02AL02

Rear view of control unit and relay location

E1. Ignition switch discharge relay (30A)

E2. Horn relays (20A)

E3. Heated back window connector (30A)

NOTE *connectors A, C and D: connected to the front cable*
connectors B, F, I, J, and H: connected to the facia cable
connectors E and G: connected to the rear cable.

DIAGRAM SHOWING INTERNAL JUNCTION BOX CONNECTIONS

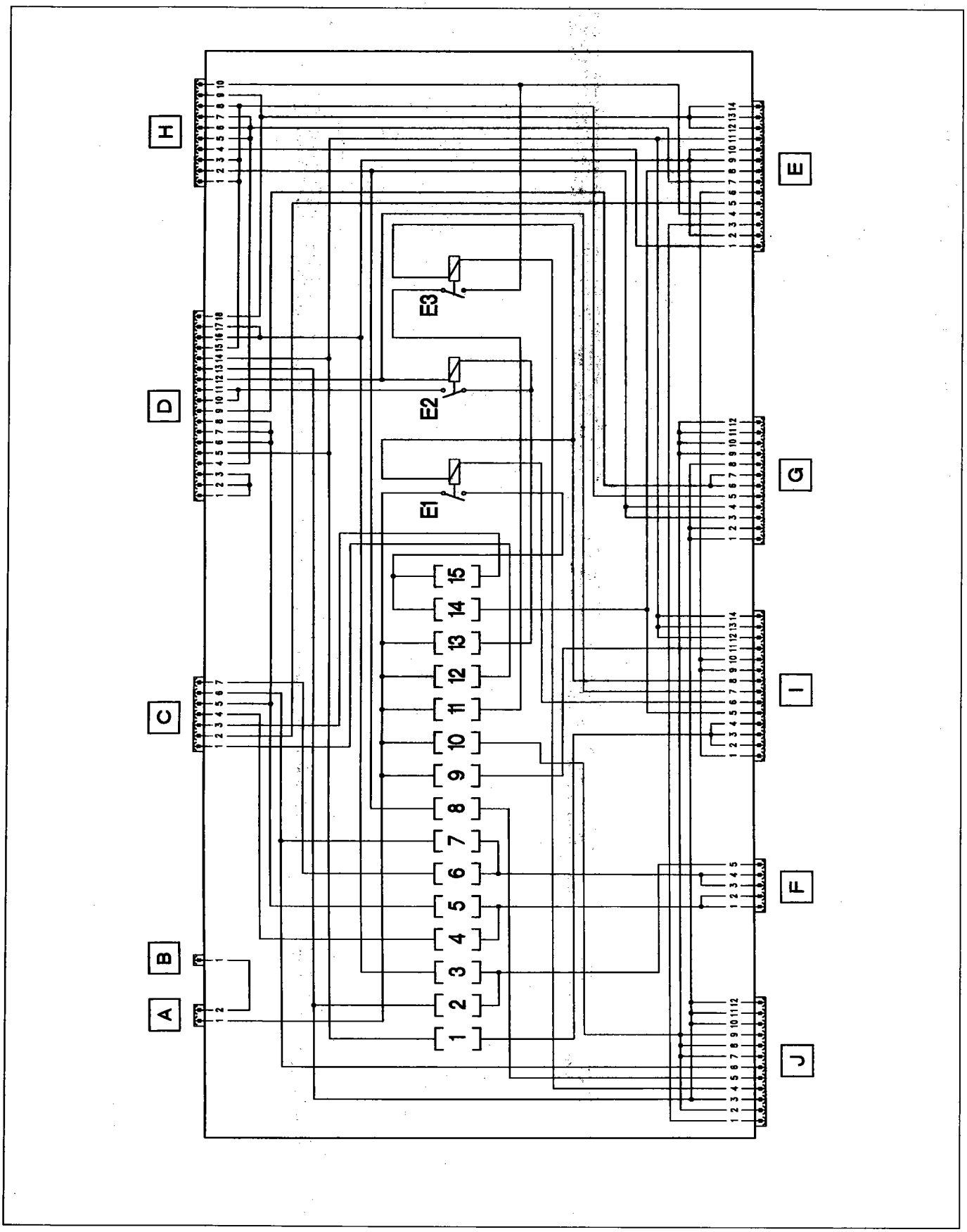

P4F010L01

LIST OF FUSES AND MAIN PROTECTED CIRCUITS

N° Fus.	Amp.	Symbol	Protected circuit	N° Fus.	Amp.	Symbol	Protected circuit
1	15	SERVIZI SERVICES	Reversing lights - Brake lights - Supplementary brake light - Turn signals - Device power supply - Alarm control unit and remote control receiver power supply	6	10		Right main beam.
				7	10		Left main beam - Main beam headlamps warning light.
				8	10		Rear fog lamps - Radio - Central locking - Electrically-operated mirror control - Front and rear windows.
				9	10		Hazard warning lights.
2	10		Right front side light - Left rear side light - Right number plate light - Radio lighting - Instrument dimmer lighting - Side light warning light - Cigar lighter lighting - Switch panel lighting - Automatic transmission control lighting.	10	10	SERVIZI SERVICES	Interior lights (front and rear) - Device power supply - Remote control receiver and alarm power supply - Radio - Compartment light.
				11	30		Heated rear windscreen - Mirror demister.
				12	30		Passenger compartment fan motor (air conditioner) - Air conditioner control unit.
				13	20		Horns.
3	10		Left front side light - Right rear side light - Left number plate light - Mirror control lighting - Heater/air conditioner control lighting.	14	20		Windscreen wiper - Rearscreen wash/wipe - Windscreen washer/rear window - Headlamp washer intermittent function - Electrically-operated front windows - Fan motor and air condition compressor relays.
4	10		Right dipped beam	15	30		Passenger compartment heating/ventilation fan motor (heater) - Heated seats - Sun-roof - Cigar lighter - Fan motor and air condition compressor relays.
5	10		Left dipped beam - Headlamp alignment correctors - Headlamp washer.				

DESCRIPTION OF WIRING AND CONNECTORS

CONNECTOR A		
Term. no.	Wiring colours	Circuit involved
1	BR	+ 30 power supply from fuse box
2	R	+ 30 power supply from fuse box

CONNECTOR C		
Term. no.	Wiring colour	Circuit involved
1	RN	Passenger compartment fan power supply (with air conditioning), air conditioner control unit
2	MB	Electric fuel pump drive, inertia switch
3	AN	Passenger compartment fan power supply (only heated), heated seats, sun-roof, cigar lighter, fan and compressor relays (TD)
4	H	Right dipped beam
5	HN	Left dipped beam, headlamp washer enablement.
6	VN	Left main beam
7	V	Right main beam

CONNECTOR E		
Term. no.	Wiring colour	Circuit involved
1	RN	Right brake light (versions with Check Panel)
2	GR	Rear view mirror control lighting
3	RG	Left brake light (versions with Check Panel)
4	MN	Rear window power supply
5	MB	Electric fuel pump, inertia switch
6	-	N.C.
7	AN	Left rear turn signal
8	-	N.C.
9	GR	Right rear side light (without check panel)
10	HL	LH numb. plate light (w/o check panel)
11	AR	Remote control receiver power supply
12	RG	Left brake light (without check panel)
13	RN	Right brake light (without check panel)
14	R	Supplementary brake light

CONNECTOR B		
Term. no.	Wiring colour	Circuit involved
1	R	Front window power supply, central locking, service control unit, main beam relay, fog lamps, sun-roof, heated seats.

CONNECTOR D		
Term. no.	Wiring colour	Circuit involved
1	G	Left headlamp adjustment
2	G	Right headlamp adjustment
3	G	Headlamp adjustment control
4	AN	Left front and side turn signal
5	AR	Brake light, alarm control unit
6	HB	Right headlamp alignment power supply
7	H	Left headlamp alignment power supply
8	-	N.C.
9	B	Reversing light control
10	Z	Horns
11	Z	Horns
12	-	N.C.
13	AB	Right front side light
14	AR	Reversing light power supply
15	A	Right front and side turn signal
16	AV	Left front side light
17	GN	Heater/air conditioner facia lighting
18	RN	Brake light control

CONNECTOR F		
Term. no.	Wiring colour	Circuit involved
1	HR	Dipped beam control
2	H	Headlamp alignment enablement
3	LR	Main beam control
4	-	N.C.
5	G	Side light power supply from ignition

DESCRIPTION OF WIRING AND CONNECTORS (cont.)

CONNECTOR G		
Term. no.	Wiring colours	Circuit involved
1	HB	RH numb. plate lght (w/o chck panel)
2	-	N.C.
3	AR	Door mirror power supply
4	AR	Rear electric window power supply
5	A	Right rear turn signal
6	BN	Left reversing light (only Marea)
7	B	Right reversing light
8	GN	Left rear side light (without check panel)
9	RN	Rear courtesy light power supply (left for Marea Weekend)
10	RN	Remote control receiver power supply
11	RN	Front courtesy light power supply
12	RN	Right rear courtesy light power supply (Marea Weekend)

CONNECTOR H		
Term. no.	Wiring colour	Circuit involved
1	AN	Right turn signal warning light
2	C	L. front window, rear window enablement, door lock, radio, rear fog lamp power
3	AN	Right turn signal control
4	RN	Right brake light (versions with Check Panel)
5	A	Left hand turn signal control
6	A	Left hand turn signal control
7	A	Left hand turn signal warning light
8	AN	Right turn signal control
9	RV	Brake light control (versions with Check Panel)
10	MN	Mirror demister control

CONNECTOR I		
Term. no.	Wiring colour	Circuit involved
1	-	N.C.
2	CB	+15 power supply from ignition
3	H	Front and rear window, door mirror, radio, door lock power supply
4	CB	Stalk unit power supply
5	C	L fr. window, engine fan relay, compr. relay, window, rear fog lamp, a/c ECU
6	N	Earth
7	LN	Horn signal
8	AG	+15 power supply from ignition (start-up excluded)
9	-	N.C.
10	-	N.C.
11	AB	Hazard warning light power supply
12	AR	Hazard warning light power supply
13	R	Instrument panel power supply
14	-	N.C.

CONNECTOR J		
Term. no.	Wiring colours	Circuit involved
1	RG	Left brake light (versions with Check Panel)
2	AG	Alarm and instrument panel power supply
3	GN	Side lights warning light, switch panel lighting, automatic transmission control lighting
4	HL	Rear window control
5	H	Rear fog lamp control, window power supply, rear view mirrors, radio, central locking
6	LB	Main beam warning light, main beam relay
7	-	N.C.
8	RG	Compartment light power supply
9	R	Radio power supply
10	GN	Radio lighting
11	GN	Instrument lighting dimmer
12	GN	Cigar lighter lighting

Copyright Fiat Auto

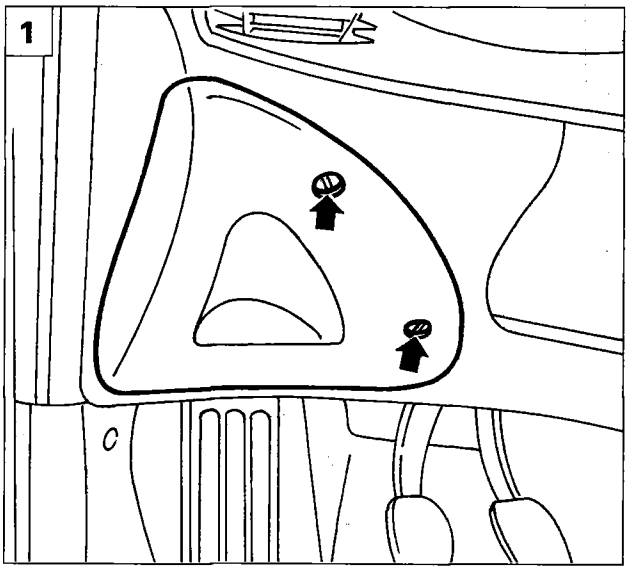

P4F014L04

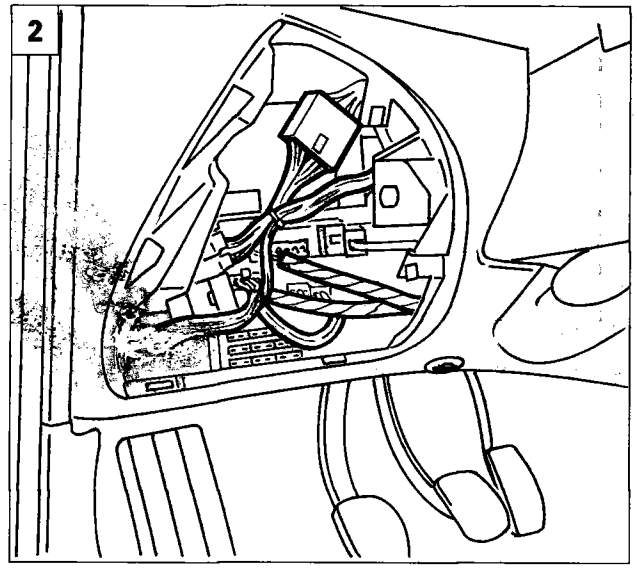

P4F014L01

REMOVING-REFITTING

1. Unscrew the bolts indicated and remove the control unit cover.
2. Disconnect the electrical connectors fitted into the front part of the control unit.
3. Unscrew the bolts retaining the control unit to the facia.
4. Move the control unit to one side, disconnect the connectors from the rear part of the unit and remove from the facia.

NOTE *Reverse order of removal operations to refit.*

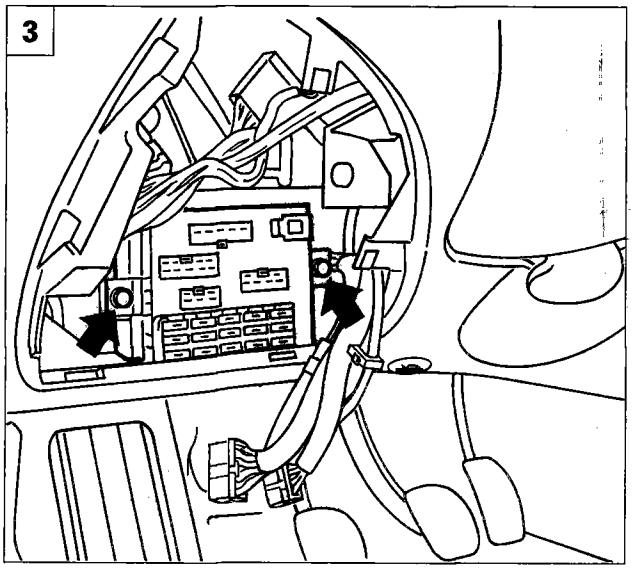

P4F014L02

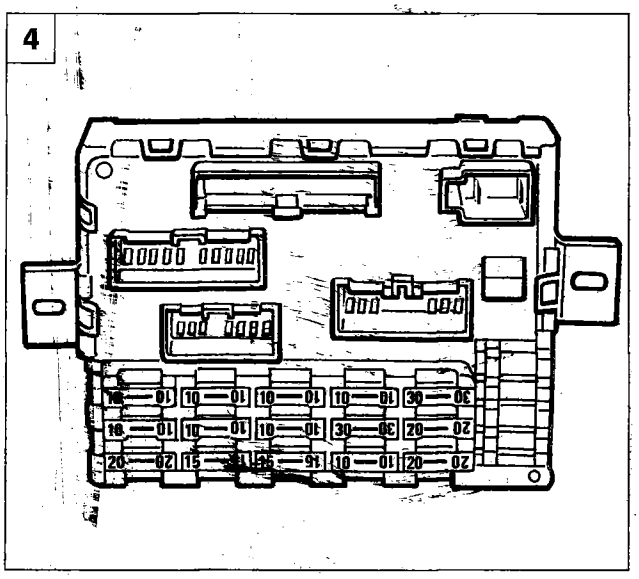

P4F014L03

INSTRUMENT PANEL FOR SX SPECIFICATION

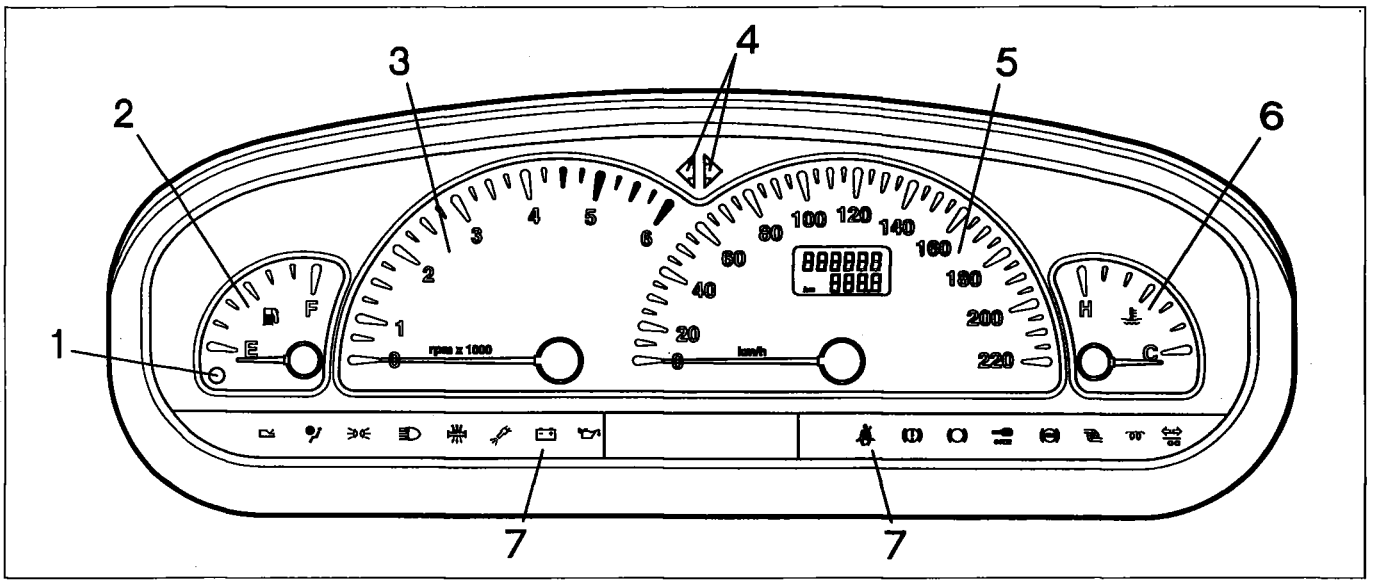

P4F03AL01

Front side

1. Fuel reserve warning light
2. Fuel level gauge
3. Rev counter
4. Turn signal warning lights
5. Analogue speedometer and digital mileometer
6. Water temperature gauge
7. Warning lights (see following pages)

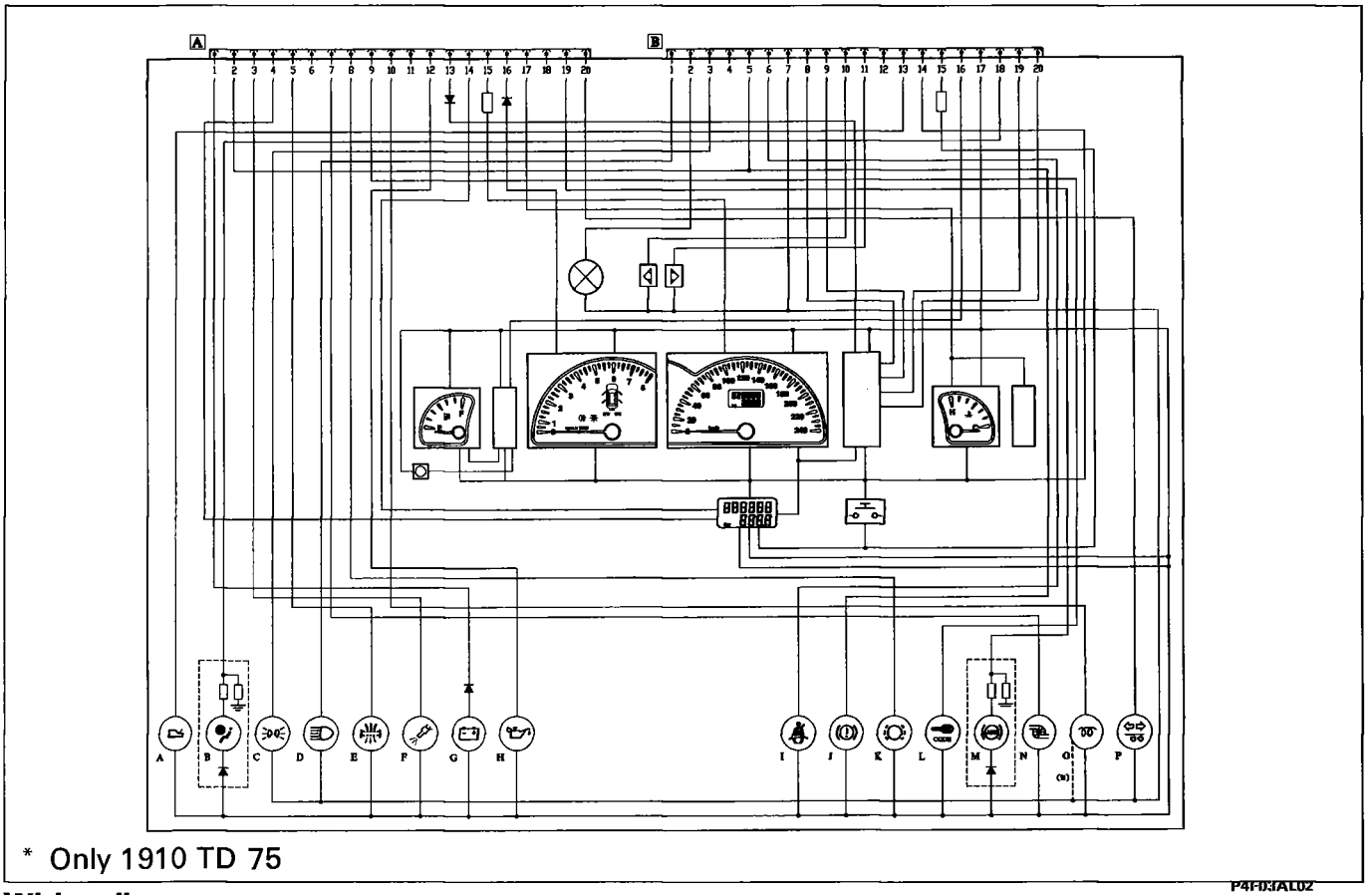

* Only 1910 TD 75

P4F03AL02

Wiring diagram

55.

INSTRUMENT PANEL FOR SPECIFICATIONS: ELX, HLX

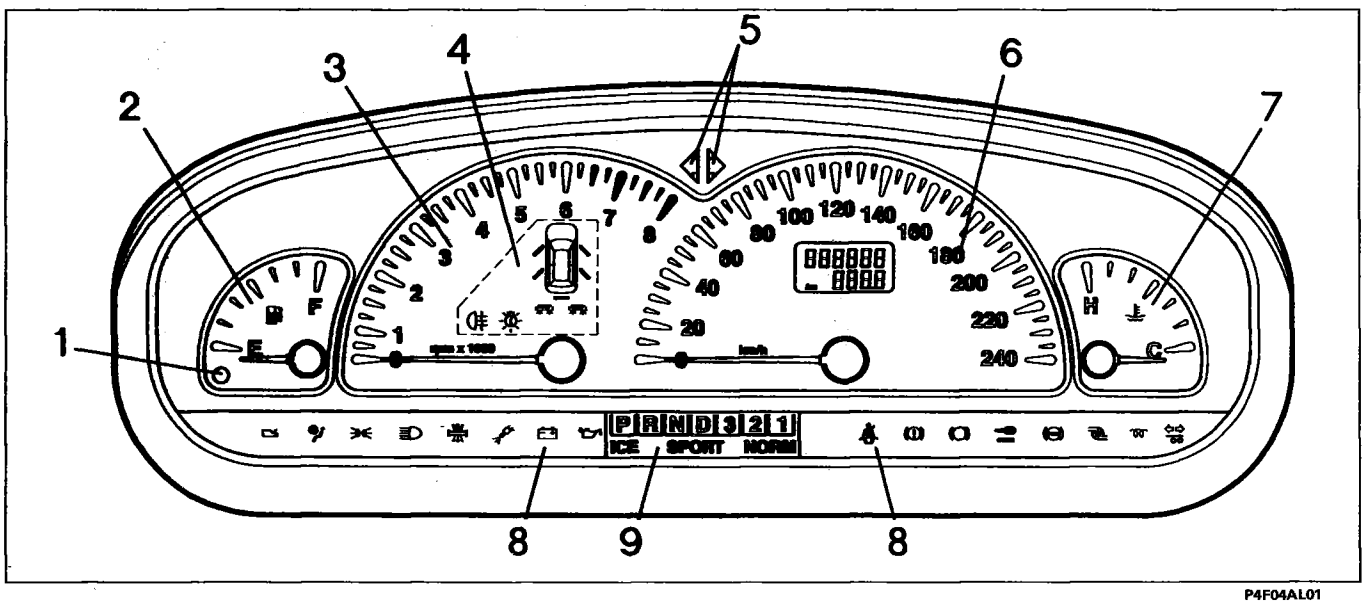

P4F04AL01

Front side

1. Fuel reserve warning light
2. Fuel level gauge
3. Rev counter
4. Check panel
5. Turn signal warning lights
6. Analogue speedometer and digital mileometer
7. Water temperature gauge
8. Warning lights (see following pages)
9. Speed indicator for automatic transmission

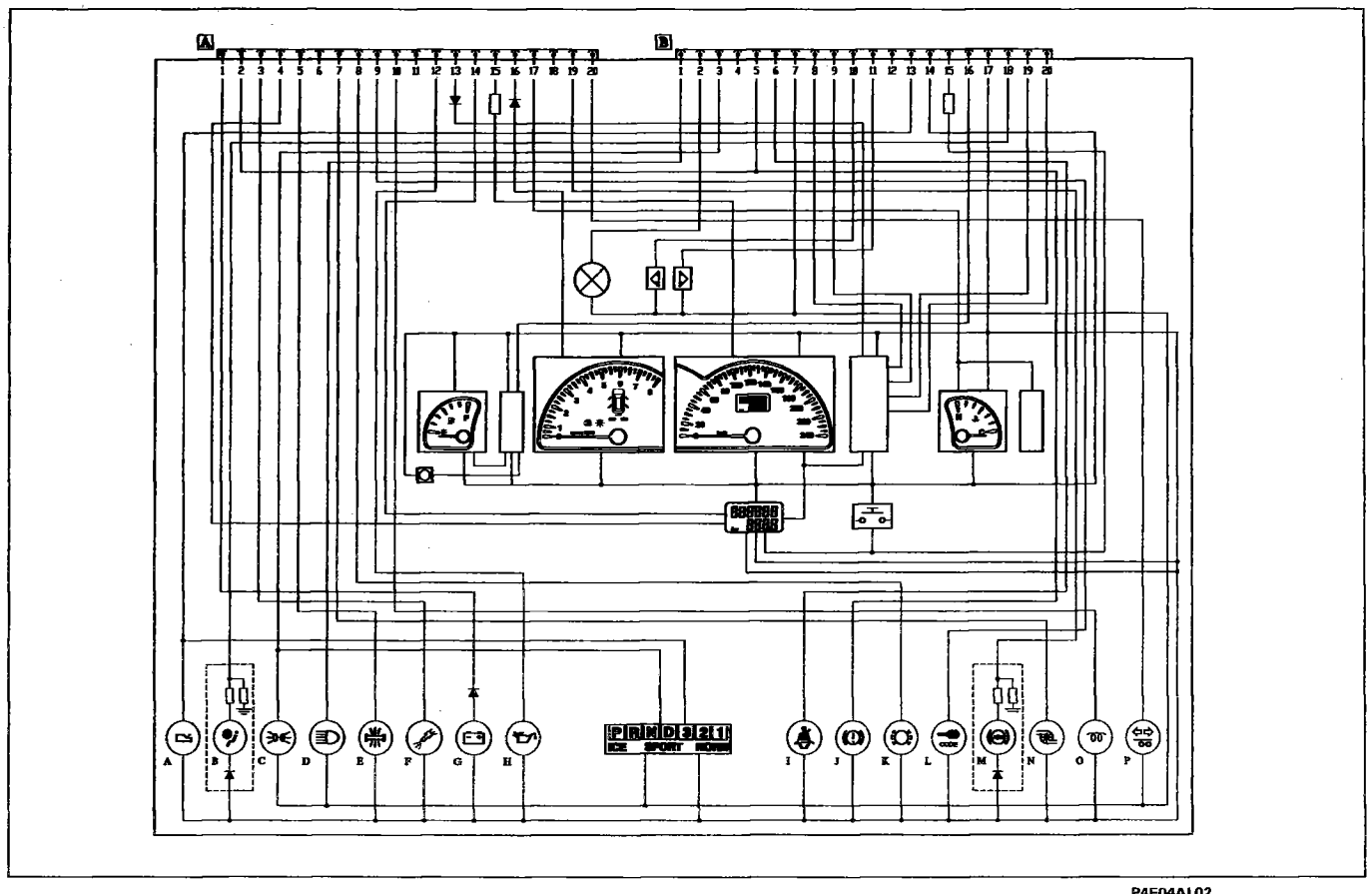

P4F04AL02

Wiring diagram

WARNING LIGHTS

A		Aut.transmission system failure (only a/c version.)	I		Seat belt
B		Faulty Air Bag	J		Low brake fluid level and hand brake on
C		Side lights	K		Excessive brake lining wear
D		Main beam head--lamps	L	CODE	Fiat CODE system
F		Air cleaner blocked	M	ABS	Fault in ABS system
F		Fault in injection system	N		Excessive turbo pressure (*)
G		Generator	O		Glow plug preheating (only TD)
H		Low engine oil pressure	F		Trailer turn signals (*)

P4F05AL01

(*) not used for current versions

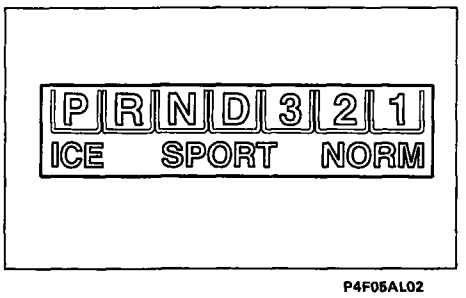

P4F05AL02

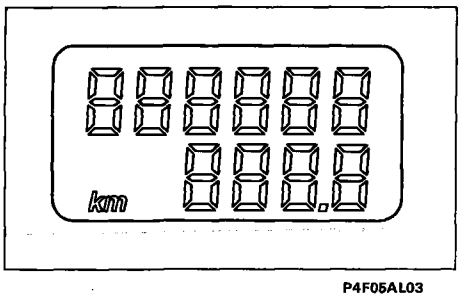

P4F05AL03

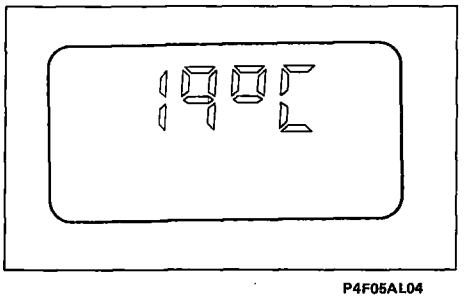

P4F05AL04

SPEED INDICATOR

Indicates gear engaged and mode selected for versions with automatic transm. (for greater detail, see Group 21-27)

MILEOMETER

When the key is turned to MARCIA, the mileometer displays mileometer or trip counter (when the appropriate button is pressed).
If the button is held down for more than 0.7 sec, the trip counter is reset to zero.

OUTDOOR TEMPERATURE

In air conditioned versions, it is possible to press a key on the central console to display outdoor temperature (in °C). This is displayed for about 10 seconds before returning to mileometer mode
If the outdoor temperature is less than +3°C, the reading FLASHES for about 10 seconds in order to attract the driver's attention to the danger of ice!

NOTE *This function can also be used to test the electronic system of the thermostatically-controlled air conditioner (see Group 50).*

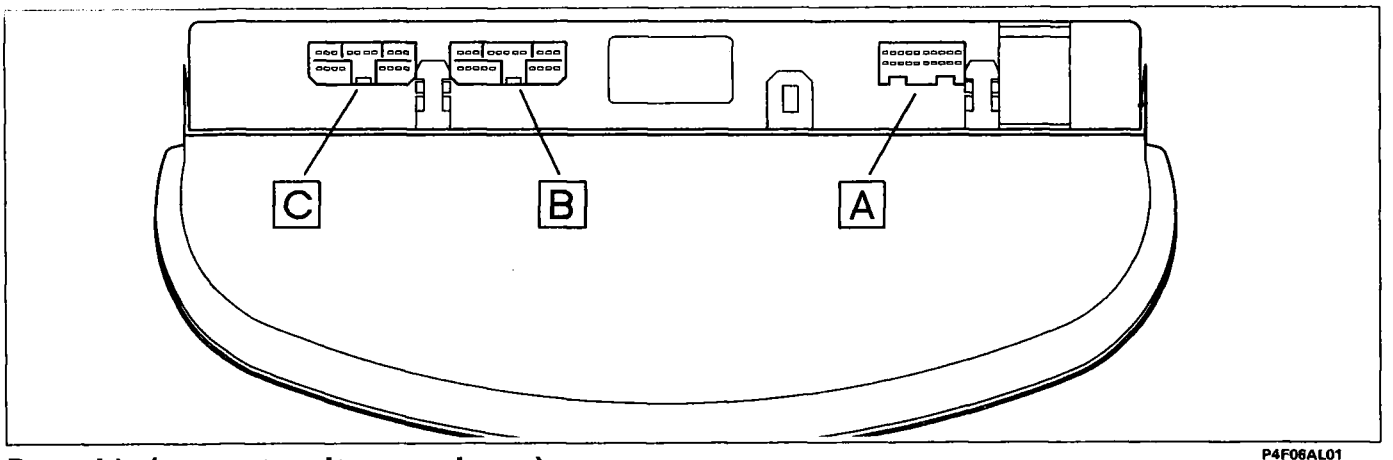

P4F06AL01

Rear side (connector sites are shown)

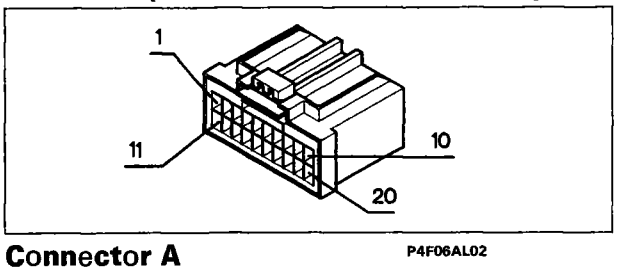

Connector A P4F06AL02

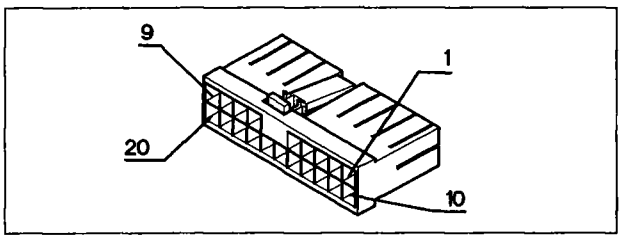

Connector B P4F06AL03

N°	Wiring colour	Circuit involved
1	HN	Generator (G)
2	BN	Brake fluid level (J)
3	LN (CN)	Fault in injection system (F)
4	AG	+30
5	HM	Air cleaner blocked (E)
6	-	Not connected
7	-	Turbocharging (N)
8	BR	Brake pad wear (K)
9	MN	Fiat Code (L)
10	CL	Glow plug preheating (O)
11	-	Not connected
12	HG	Minimum oil pressure (H)
13	HM (MG)	Speedometer signal
14	HL	Outdoor temperature signal
15	CN (CB)	Speedometer module power supply
16	L (AR)	Rev counter signal
17	HB	Coolant temperature gauge
18	-	Not connected
19	RV	ABS failure (M)
20	-	Trailer lights (P)

N°	Wiring colour	Circuit involved
1	LB	Main beam headlamps (D)
2	GR	Control panel lighting
3	GN	Side lights (C)
4	-	Not connected
5	BN	Handbrake (J)
6	M	Seat belt (I)
7	N	Earth
8	-	Speedometer signal
9	-	Speedometer signal
10	A	Left-hand turn signal
11	AN	Right-hand turn signal
12	-	Not connected
13	-	Automatic transmission (A)
14	N	Earth (eletronic)
15	GL	Outdoor temperature key
16	HG	Fuel level
17	A	+ 15
18	C	Air-bag failure (B)
19	-	Speedometer signal
20	-	Speedometer signal

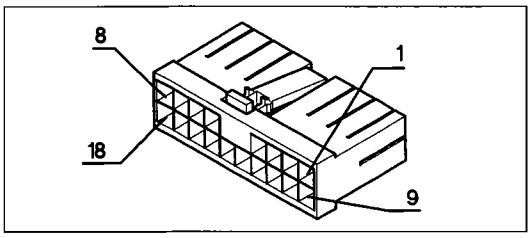

P4F07AL01

Connector C (CHEK PANEL)

N°	Wiring colour	Circuit involved
1	C	Rear fog lamp control
2	GL	Left front side light
3	RV	Brake light switch
4	GR	Right rear side light
5	GN	Left rear side light
6	GV	Right front side light
7	HB	Right number plate light
8	HL	Left number plate light
9	RG	Left brake light
10	RN	Right brake light
11	H	Rear fog lamps
12	G	Side light control
13	HG	Left front door
14	HV	Right front door
15	HN	Left rear door
16	HR	Right rear door
17	R	Tail-gate
18	AV	Side light control

CHECK PANEL DEVICE

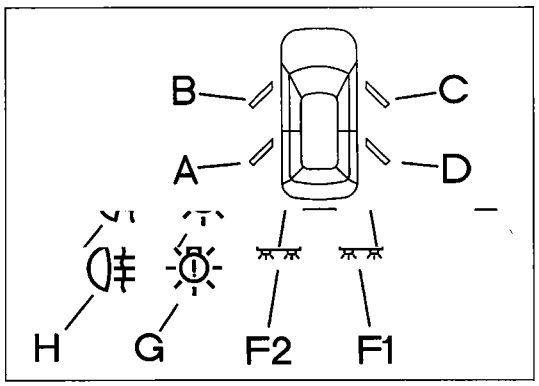

P4F07AL02

The ELX and HLX versions are also fitted with a CHECK PANEL on the control panel - when the key is turned to MARCIA, this monitors a series of functions and indicates any anomalies by means of warning lights:

DOOR CHECK: switches on the locks indicate whether one of the doors is open by turning on the corresponding led:

A: left rear door
B: left front door
C: right front door
D: right rear door
E: boot tail-gate

EXTERIOR LIGHTING CHECK: The electronic module inside the control panel is able to check inappropriate electrical loads in the case of certain vehicle electrical functions and to check whether circuits are open or closed.

- F: BRAKE LIGHTS: when the brake pedal is pressed down, a led comes on (F1 left or F2 right) together with main exterior lighting led G to indicate a fault in the bulb or a break in the light wiring. Neither the supply fuse nor the central third brake light are checked.

- G: SIDE LIGHTS AND NUMBER PLATE LIGHTS: when the side lights are on, led G comes on to indicate a fault in one of the bulbs or a break in the wiring. The two supply fuses are also checked (NO indication is given if two fuses blow simultaneously!)

- H: REAR FOG LAMPS: when the lights are on, led H and general exterior lighting led G come on to indicate a fault in both bulbs or a break in the light wiring. The supply fuse is also checked.

Copyright Fiat Auto

SMART INDICATORS

In the case of two functions very important for vehicle safety (ABS and AIR BAG SYSTEM), the normal warning lights have been replaced by an electronic circuit, which is responsible for SMART INDICATOR functions:

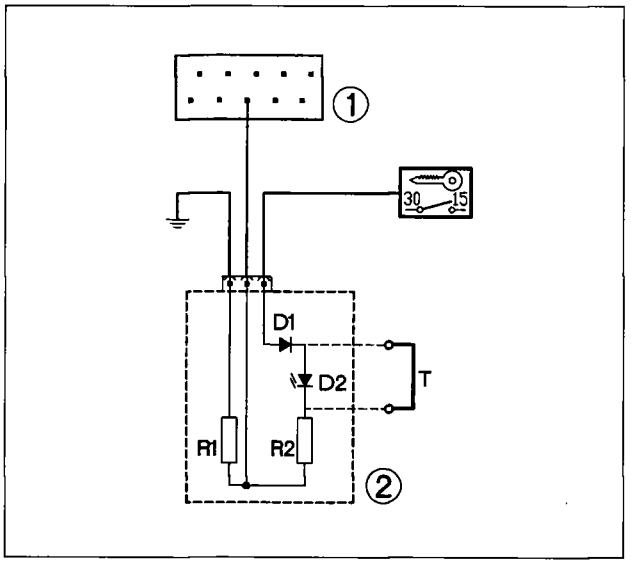

P4F08AL01

a warning light comes on in response to a signal from the control unit, which sends a failure or alarm signal to the control panel. The same warning light also comes on if a broken connection or short circuit to earth is detected between the control unit and the panel. This is achieved by the same circuit shown in the figure: the warning light in question is led D2. This comes on when an earth signal is received from control unit (1) or if the connection is broken or short circuits to earth.

D1: protective diode
D2: warning light
R1, R2: charge resistance
1: ECU
2: integrated warning light circuit.

The ABS and Air Bag systems are supplied as options on some versions. If these systems are NOT installed on the car, the integrated circuit would indicate a continual fault!
A lamp holder (A) for the ABS system and a lamp holder (B) for the Air Bag system are fitted in parallel to led D2.
If these systems are present, a WHITE CAP is fitted on the sites and the circuit works normally. If one of the two systems is NOT present, the cap is replaced by a bridge (T) (BROWN) which short-circuits the warning light.

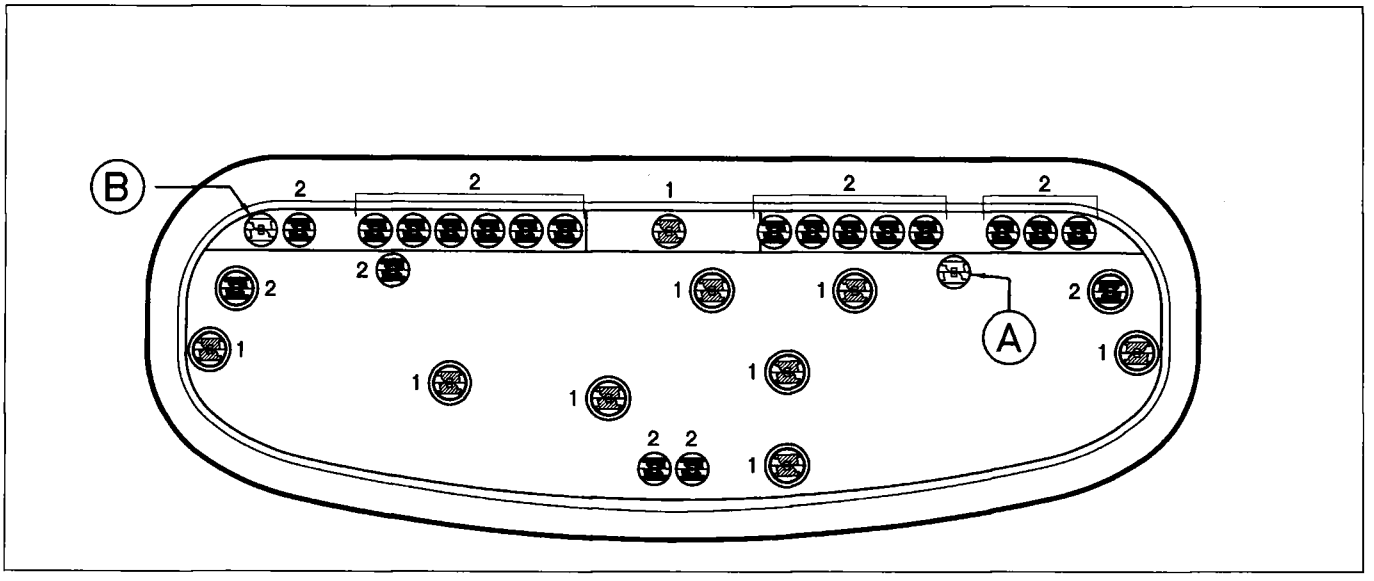

P4F08AL02

REPLACING BULBS

The control panel consists of a single integrated component supplied in one piece. It is possible to replace the individual warning light bulbs, which are of two types: bulbs identifed by (1) in the figure are for control panel lighting, bulbs marked (2) refer to warning lights. Both are 12V, 1.2 W bulbs.

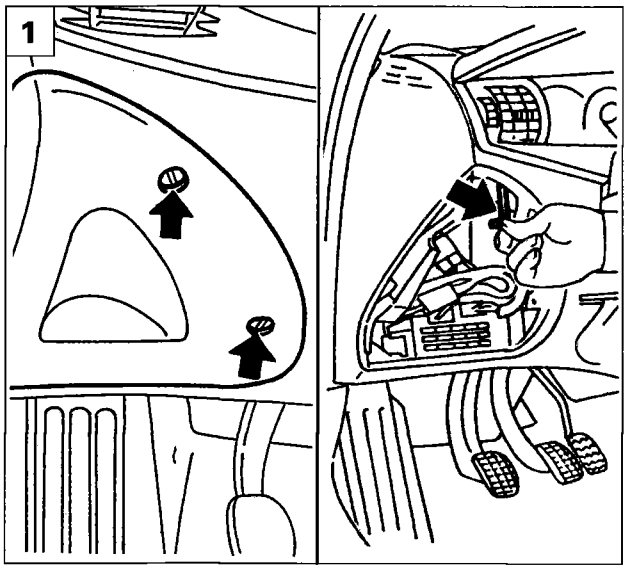

P4F021L01

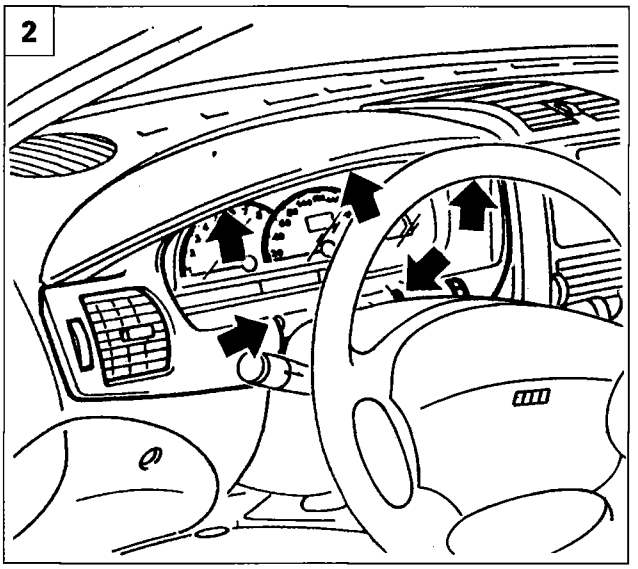

P4F021L02

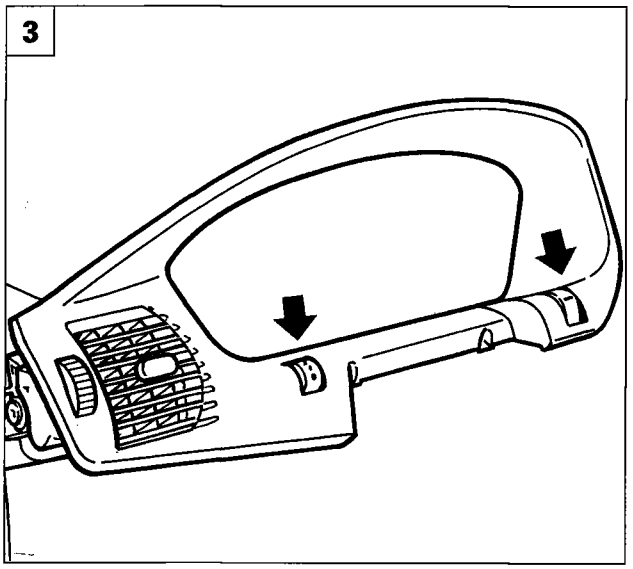

P4F021L03

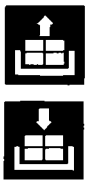

REMOVING-REFITTING

1. Remove the junction box protective cover. Unscrew the outer control panel frame retaining screw.
2. Unscrew the outer control panel frame retaining screws.
3. Remove the facia frame after disconnecting the two panel lighting and headlamp adjustment rheostat connectors (arrowed).
4. Unscrew screws fastening control panel to the facia.
5. Disconnect electrical connections from the control panel and remove panel from the vehicle.

NOTE *Reverse order of removal operations to refit .*

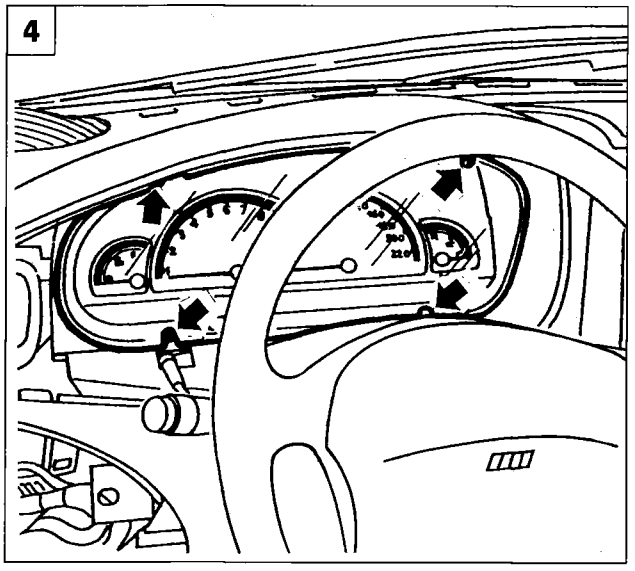

P4F021L04

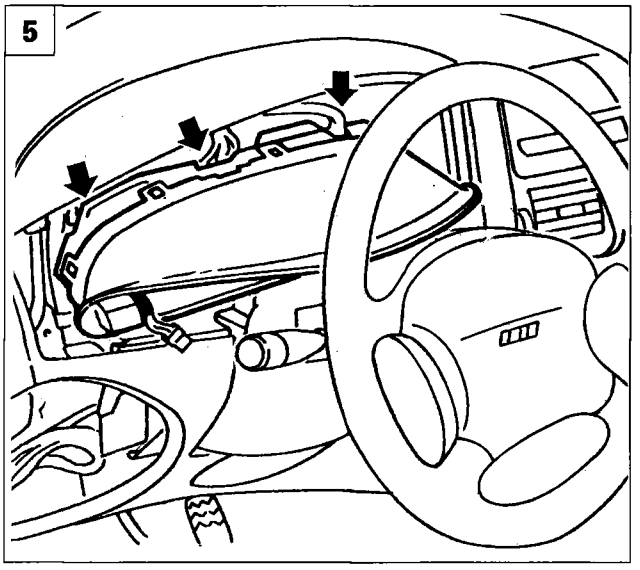

P4F021L05

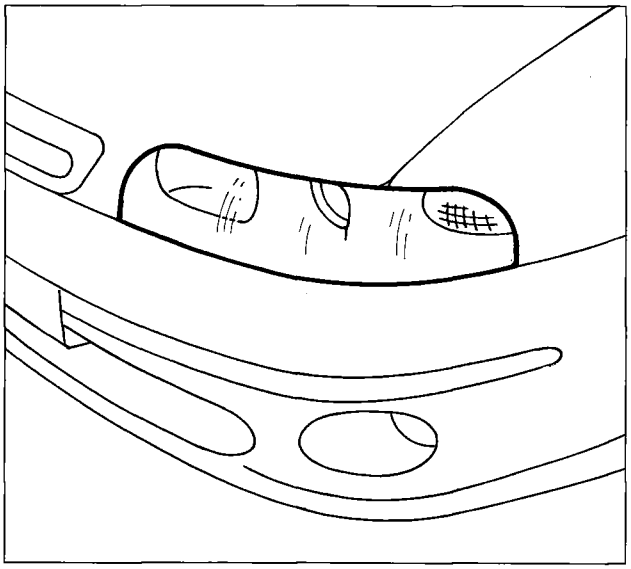

P4F09AL01

POLYELLIPTICAL HEADLAMPS

Some vehicle specifications are fitted with POLYELLIPTICAL HEADLAMPS.

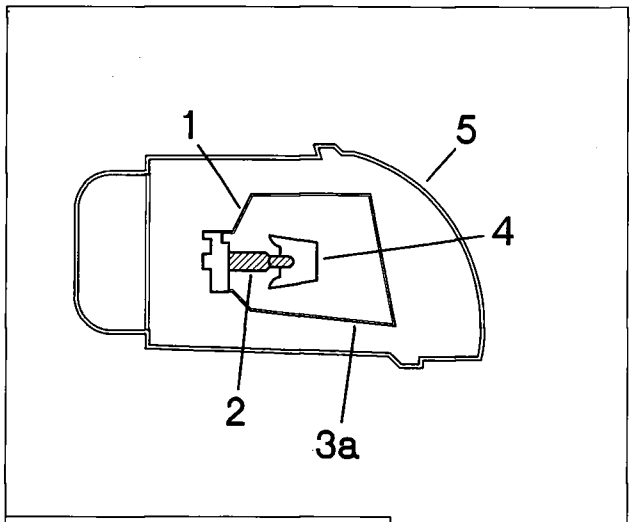

CONVENTIONAL HEADLAMP

P4F09AL02

Unlike conventional headlamps, these headlamps are fitted with a lens (6) at the centre of the light beam, and can be identified externally by a dark area at the middle of the headlamp.
Reflecting surface (3) is not a conventional parabola but an ellipse. The light beam is shielded not only by a darkened diaphragm (4) as in the case of dipped headlamps, but also by lens (6) located in the centre of focus. This delimits lighted areas from dark areas more effectively in order to reduce annoyance to other drivers approaching in the opposite direction.

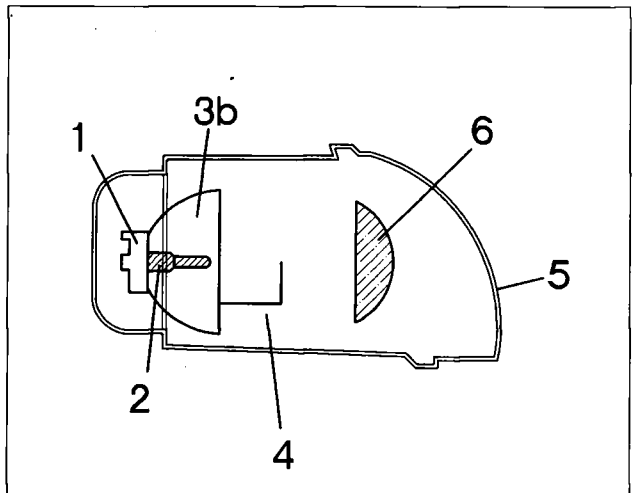

POLYELLIPTICAL HEADLAMP

P4F09AL03

1. bulb holder
2. bulb
3a. parabolic reflector
3b. elliptical reflector
4. darkener
5. glass
6. lens

Polyelliptical headlamp with convex lens located immediately after focus F

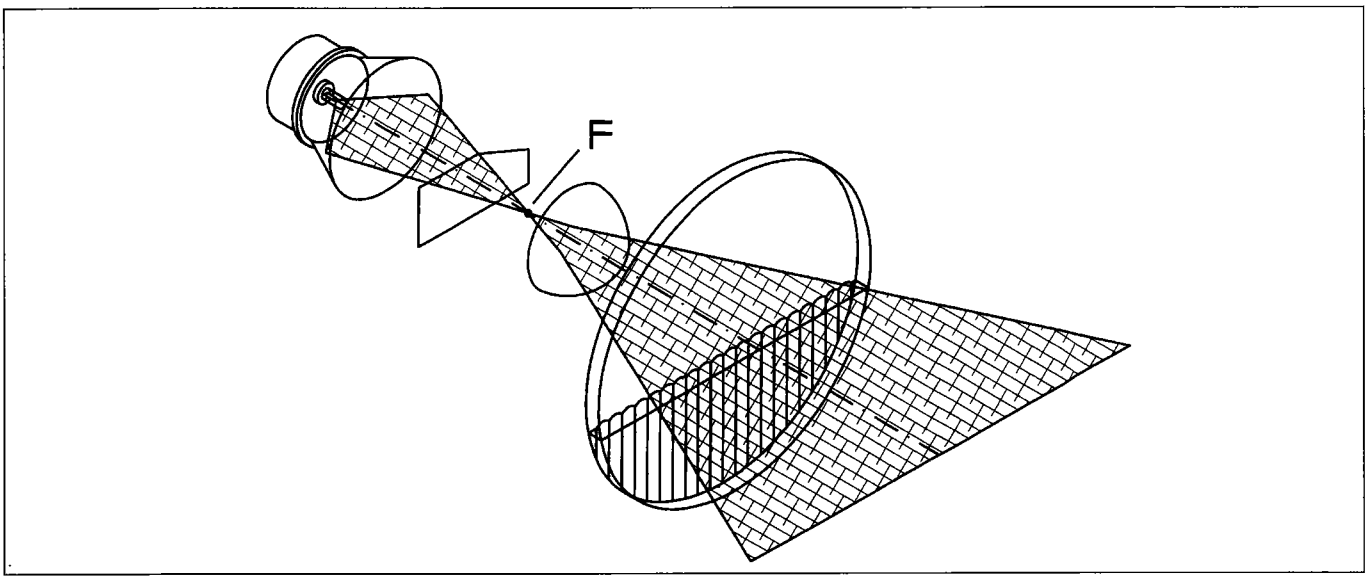

P4F10AL01

"ISOLUX" curves lighting the road surface

A: conventional headlamp (parabolic)
B: polyelliptical headlamp

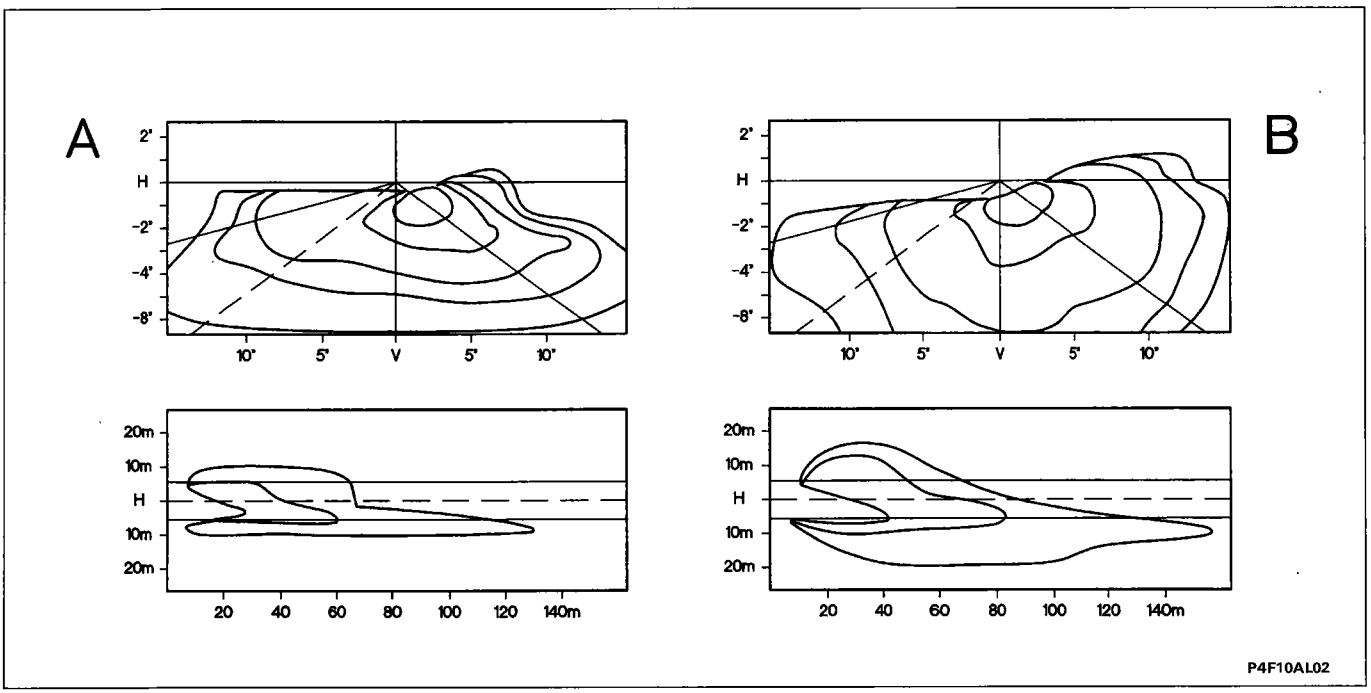

P4F10AL02

Note that a polyelliptical headlamp can provide increased depth, lighting intensity, range angle and overall illuminated area.

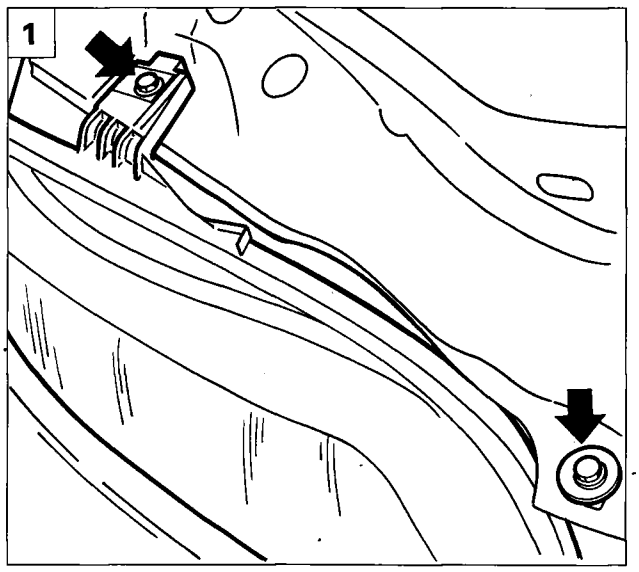

P4F024L01

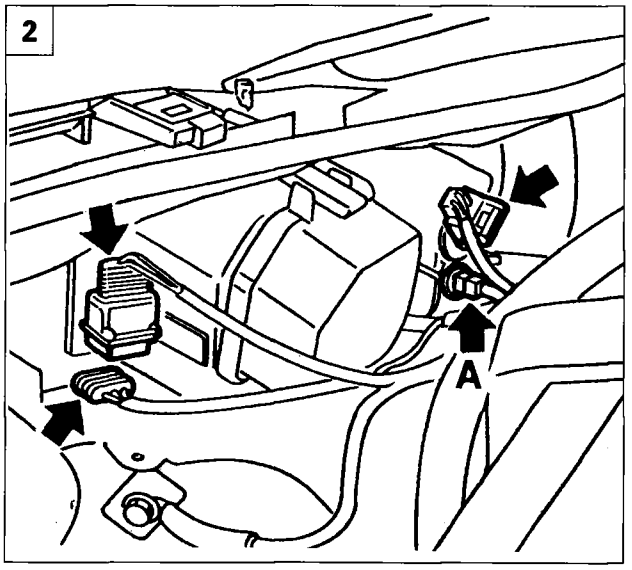

P4F024L02

FRONT LIGHT CLUSTER WITH TURN SIGNAL

Removing-refitting

1. Unscrew screws fastening light cluster to the body.
2. Disconnect electrical connectors from the light cluster (connector A is present only in polyelliptical headlamps).
3. Remove the light cluster assemblly from the vehicle.
4. Fit pin A into the appropriate seat on the body during assembly.

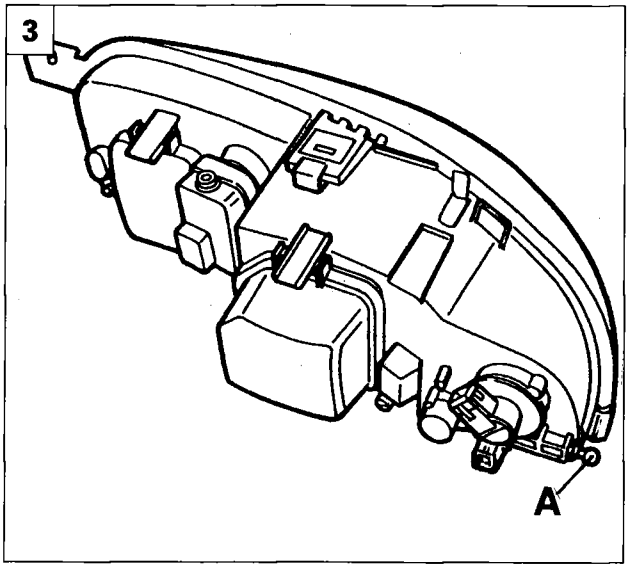

P4F024L03

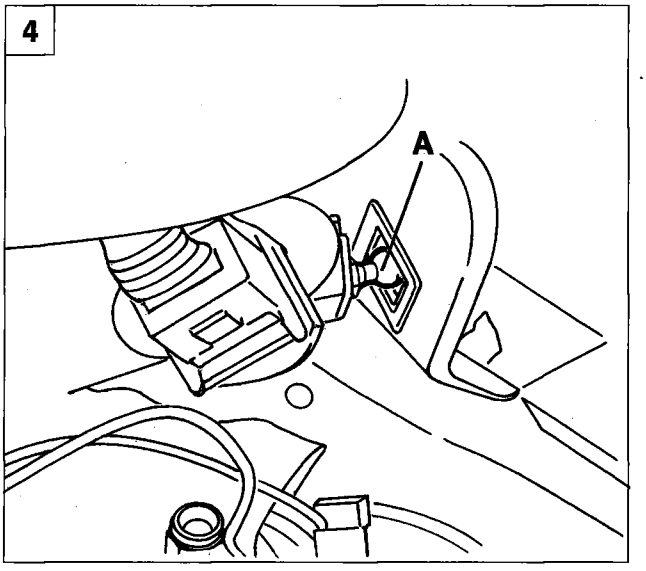

P4F024L04

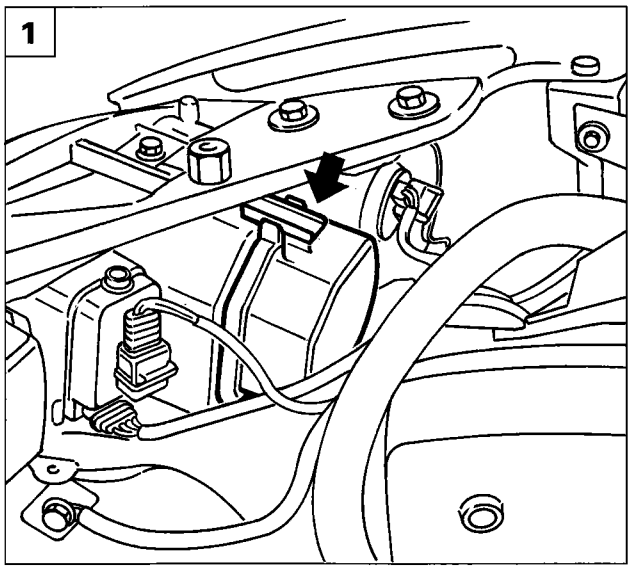

P4F025L01

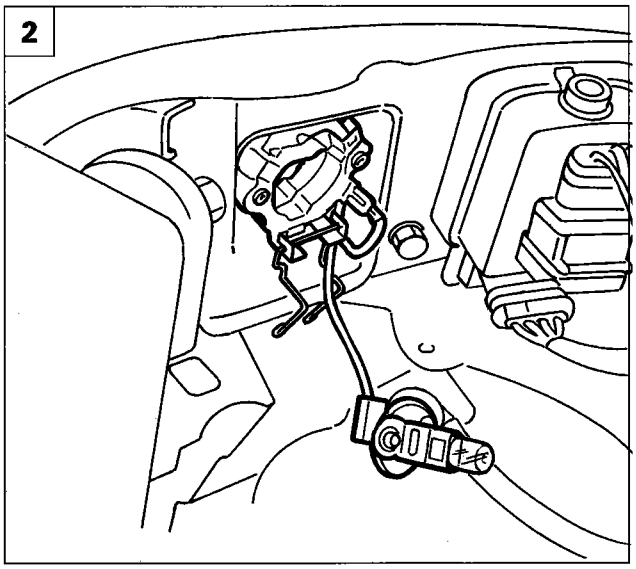

P4F025L02

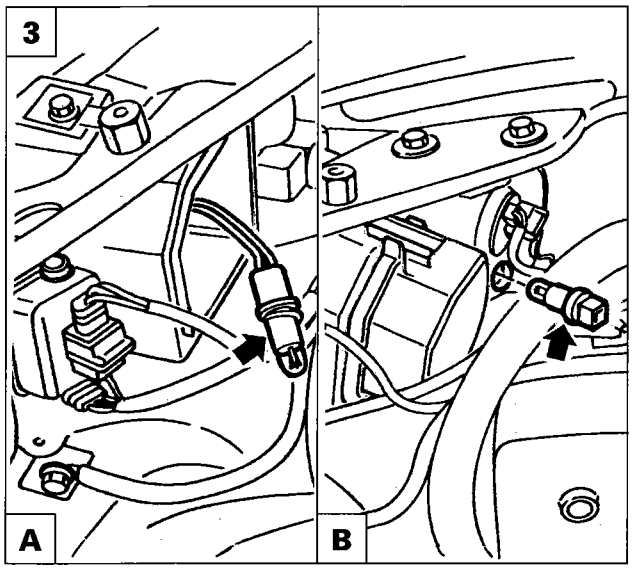

P4F025L03

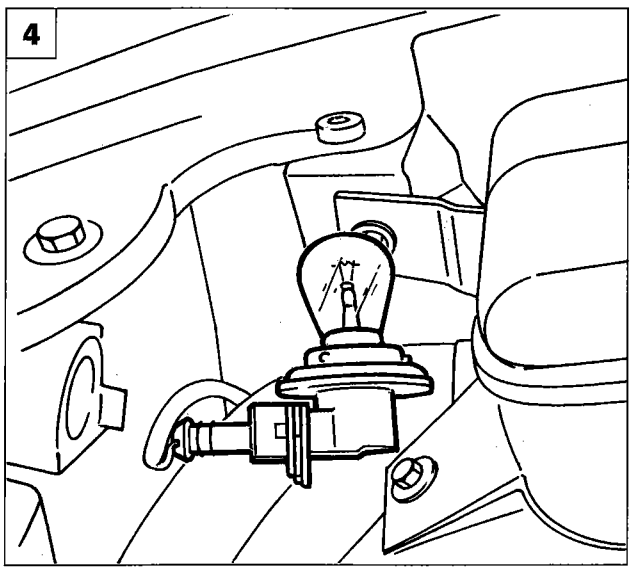

P4F025L04

REPLACING FRONT LIGHT CLUSTER

Dipped and main beam bulbs

1. Remove the plastic protections by pressing the lever shown, which retains them to the light cluster.
2. Remove the bulb (after undoing the retaining clip) from the light cluster. Disconnect the bulb from its connector and replace. Avoid touching the bulb with bare hands.

Turn signal bulbs

Version with parabolic headlamps (A)

3. Carry out operation 1 and remove bulb holder from light cluster. Then remove bulb from bulb holder.

Version with polyelliptical headlamps (B)

3. Remove the bulb holder after disconnecting the connector.
   Disconnect the bulb by turning as appropriate.

Turn signal bulbs

4. Turn the bulb holder through 90 degrees and remove from the light cluster.

- Remove the connector from the bulb holder and then turn the bulb to remove from the bulb holder.

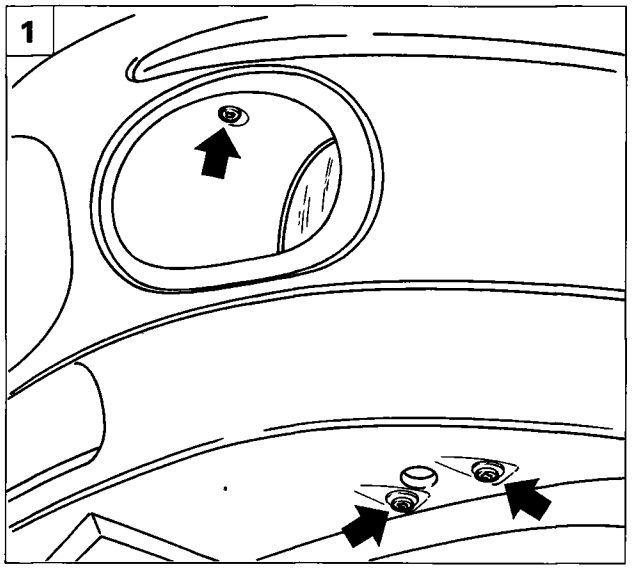

P4F026L01

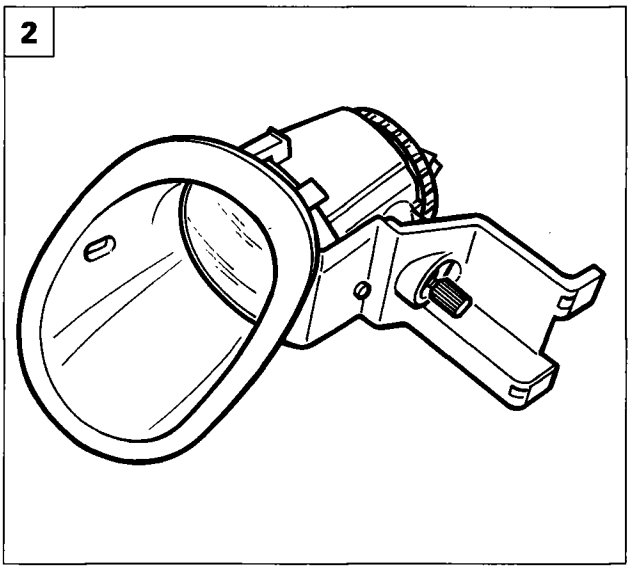

P4F026L02

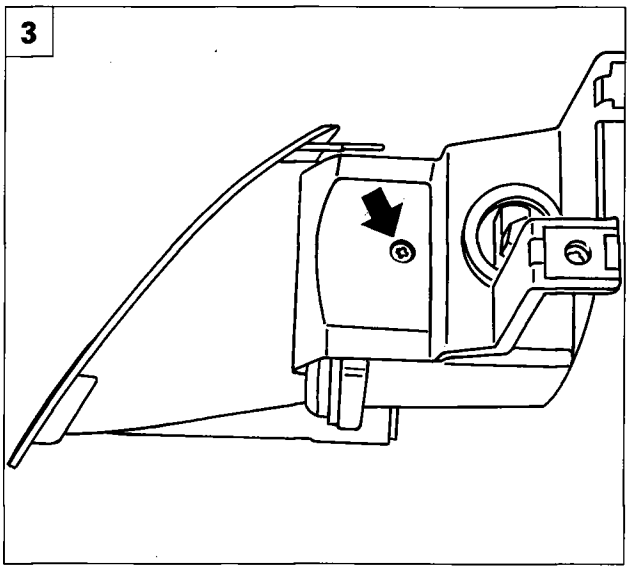

P4F026L03

FOG LAMPS

Removing-refitting

1. Position the vehicle on a lift, raise and unscrew the bolts shown in the figure.
2. Withdraw the foglamp from the front part of the bumpers
3. Unscrew the screw shown in the figure.
4. Unscrew bolts indicated in figure.
5. Separate the frame from the fog lamp.

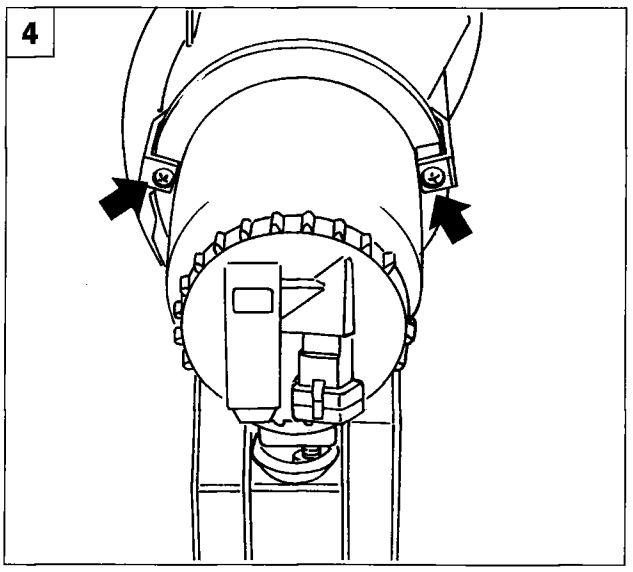

P4F026L04

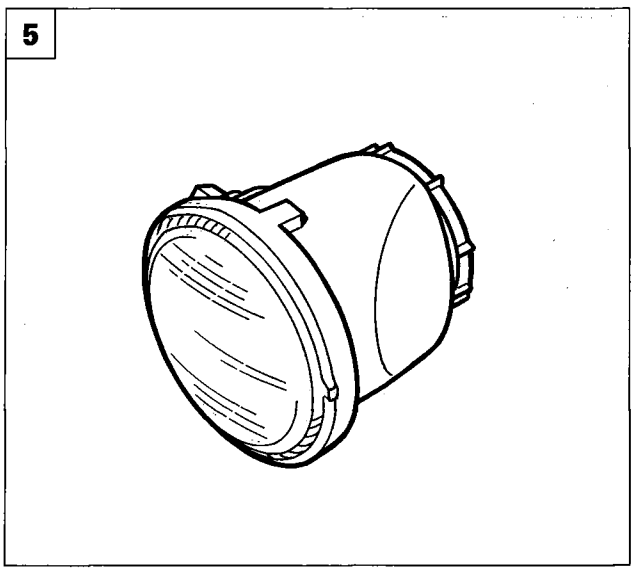

P4F026L05

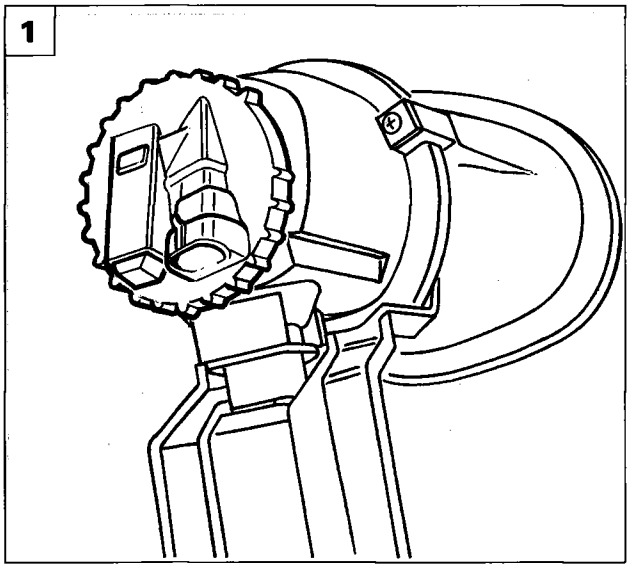

P4F027L01

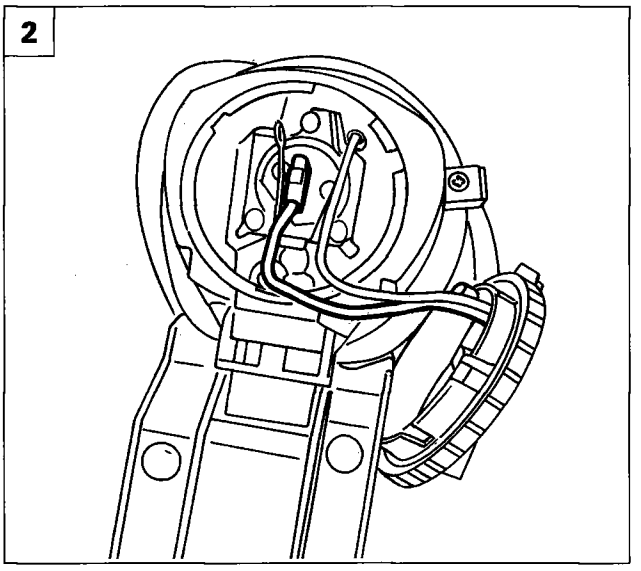

P4F027L02

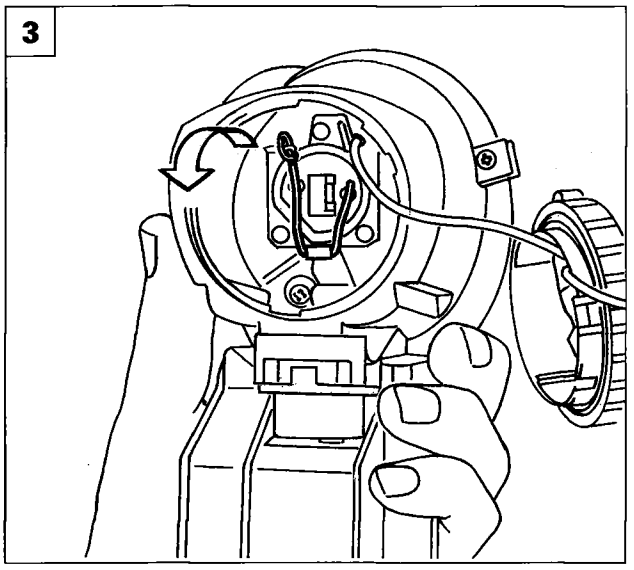

P4F027L03

Replacing the bulb

Carry out operations 1, 2, 3, described on the previous page.

1. Unscrew the cover in the rear part of the fog lamp assembly.
2. Disconnect electrical connection indicated.
3.4. Turn the bulb retaining lever.
5. Remove the bulb from the bulb holder.

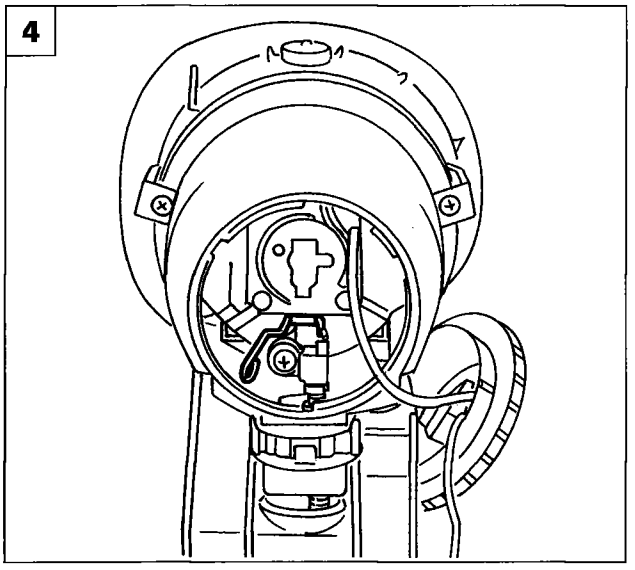

P4F027L04

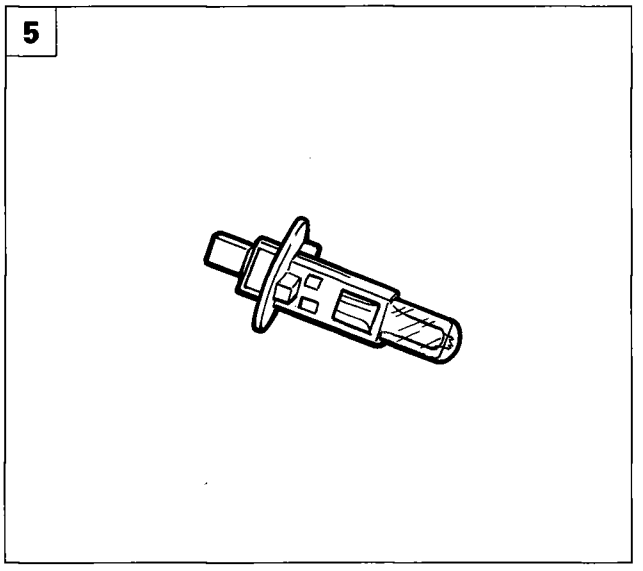

P4F027L05

Copyright Fiat Auto

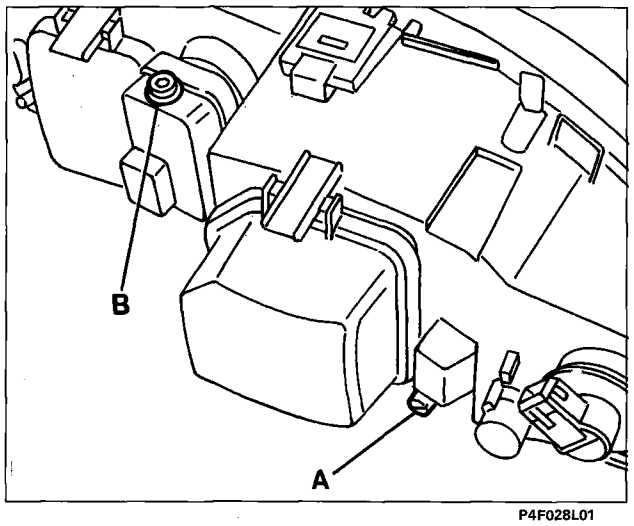

P4F028L01

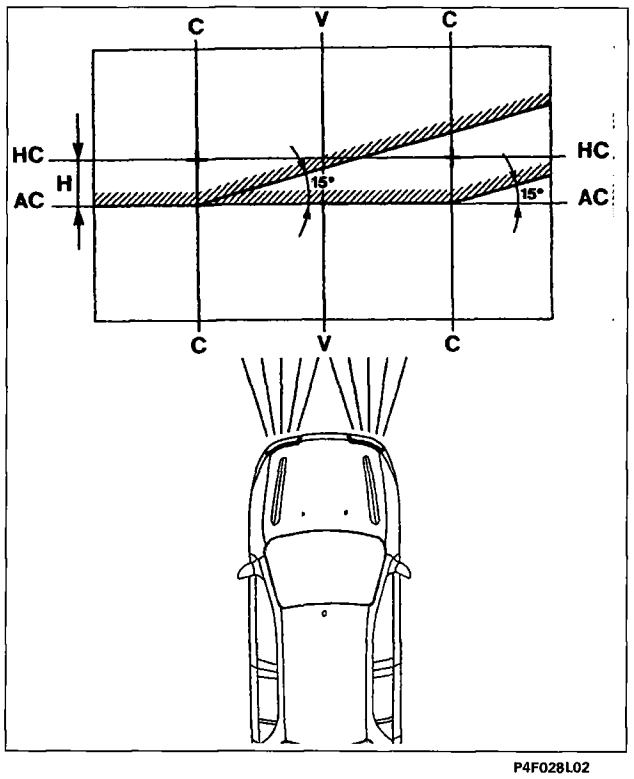

P4F028L02

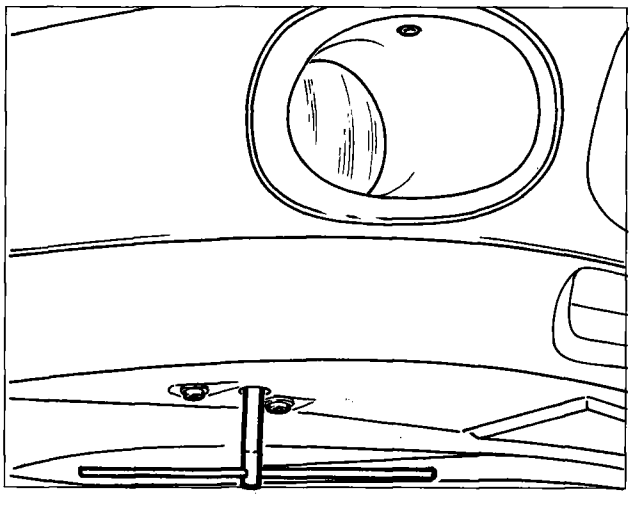

P4F028L03

HEADLAMP ALIGNMENT

A. Horizontal light beam adjustment screw

B. Vertical light beam adjustment screw.

The car must be equipped with the spare wheel, tools, fluids and fuel reserve. The tyre pressure must be the normal service pressure and the driver must be on board.

Position the vehicle on a flat surface with the light lens 10 m away from a screen or opaque surface on which the following lines are drawn:
V - V: vertical corresponding to the vehicle plane of symmetry.
C - C: corresponding to the vertical plane passing through the light cluster centres.

HC-HC: horizontal corresponding to the height of the light clusters above ground.

AC-AC: horizontal 10 cm below line HC-HC (value for new and assigned vehicles corresponding to a reduction of 1%).

Align the lights with the dipped beam on. Adjust the headlamp adjustment device as follows.

Vertical alignment

Align the horizontal section of the line of demarcation between the dark area and the area lighted by the light beam with the line **AC-AC** drawn on the screen.

Horizontal alignment

Align the crossing point between the two demarcation lines (horizontal and tilted) with the point at which the lines **C-C and AC-AC** cross on the screen. This value must be reduced proportionally if the screen is nearer.

Manual fog lamp adjustment

Adjust the fog lamp light beam by means of a key fitted into the relevant hole (see figure).

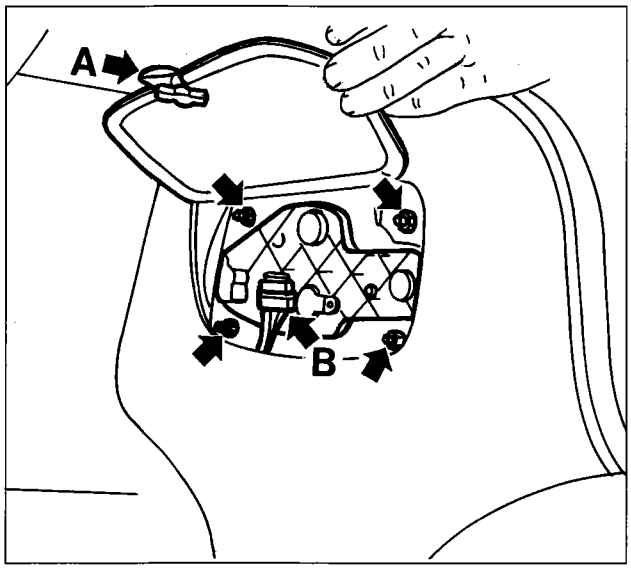

P4F029L01

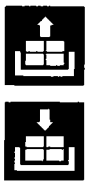

TAIL LIGHT CLUSTER

Removing-refitting

- Open the boot lit; raise the access hatch after releasing from retainer (A).
- Disconnect connector (B) then unscrew the retaining nuts indicated and remove the tail light cluster from the outside.

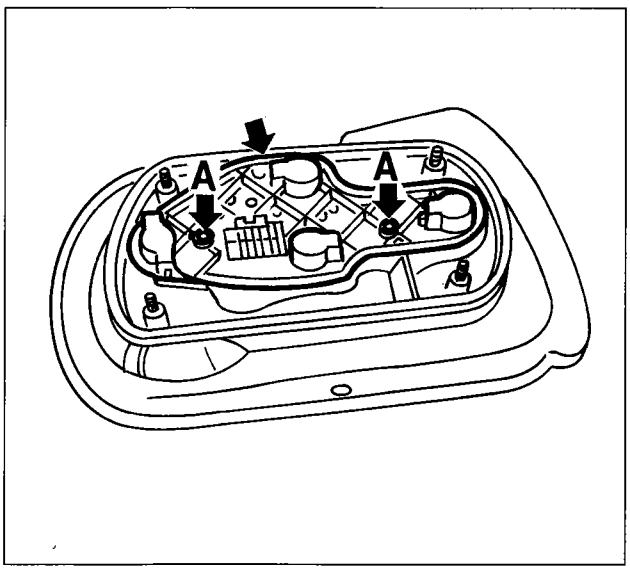

P4F029L02

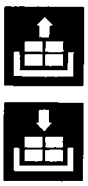

Replacing bulbs

- Unscrew bolts (A) and remove the bulb holders.

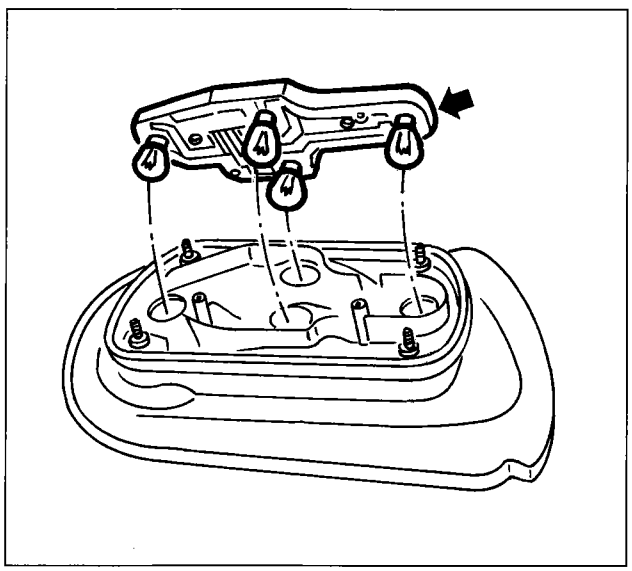

P4F029L03

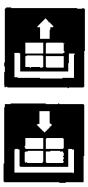

- Replace bulbs (bayonet mount).

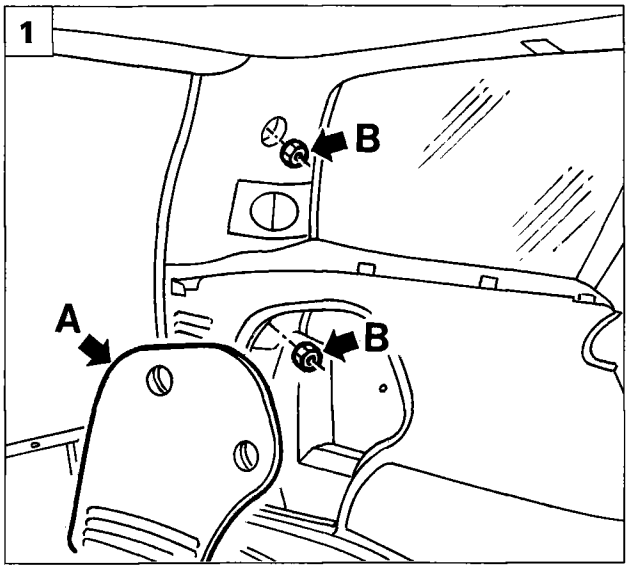

P4F030L01

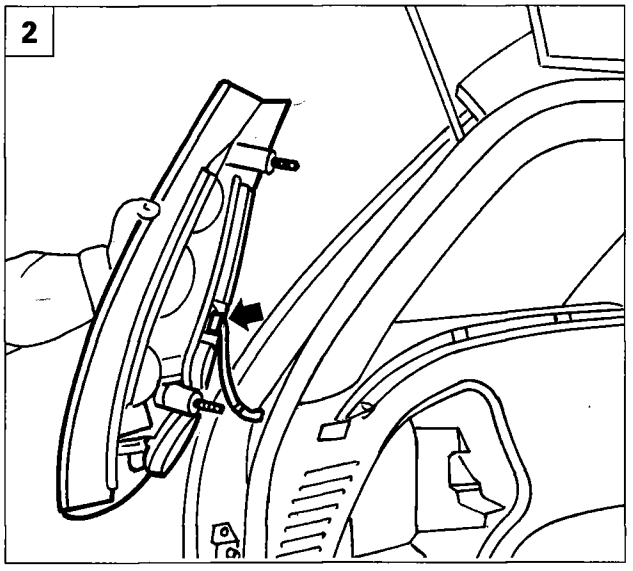

P4F030L02

TAIL LIGHT CLUSTER

Removing-refitting

1. Remove cover (A).
   Unscrew bolts (B) retaining tail light cluster and disconnect the tail light cluster slightly.
2. Disconnect connector and remove the tail light cluster.

Replacing bulbs

3. Unscrew the bolts indicated retaining the bulb holders.
4. Remove the bulb holder and replace the bulbs (bayonet mount).

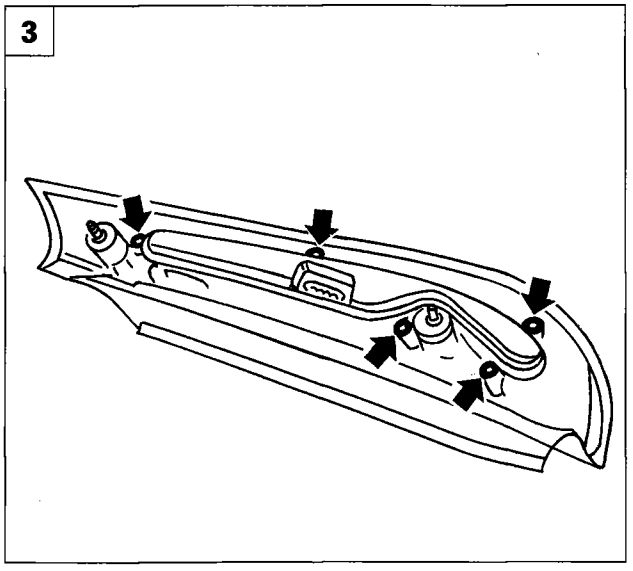

P4F030L03

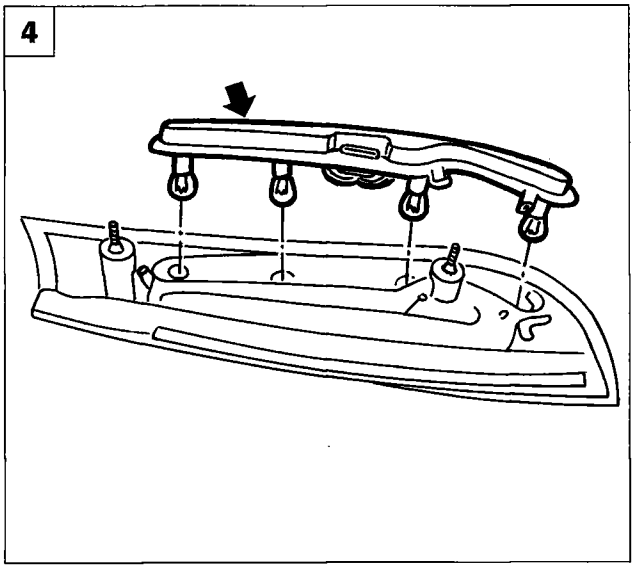

P4F030L04

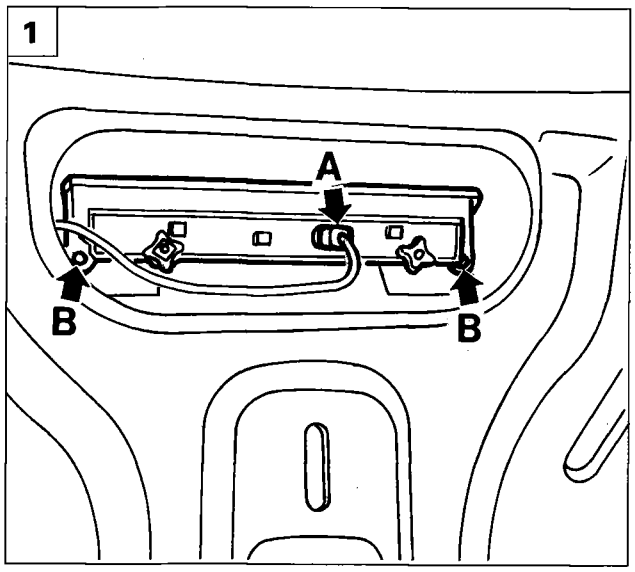

P4F031L01

SUPPLEMENTARY BRAKE LIGHT (MAREA)

Removing-refitting

1. Open the boot lid.
   Disconnect connector (A) of the supplementary brake light.
   Unscrew bolts (B) and remove the supplementary brake light.

Replacing bulbs

2. Unscrew knobs (A) and remove the bulb holders.
   Remove the bulbs by pulling them out (press-fitted).

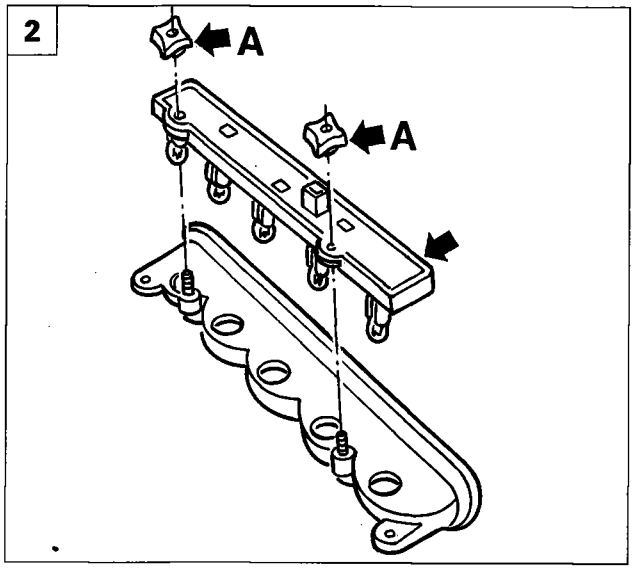

P4F031L02

SUPPLEMENTARY BRAKE LIGHT (MAREA WEEKEND)

Removing-refitting

3. Open the tail-gate.
   Unscrew the bolts indicated and move the top panel slightly to one side.
4. Disconnect connector of the supplementary brake light, then remove the upper panel.

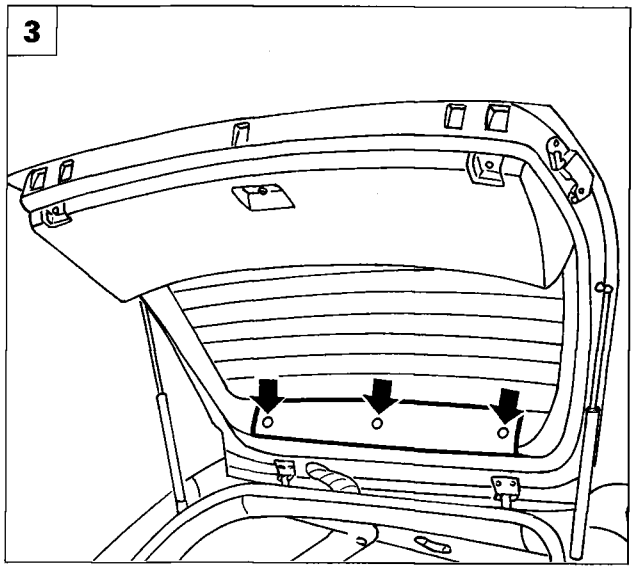

P4F031L03

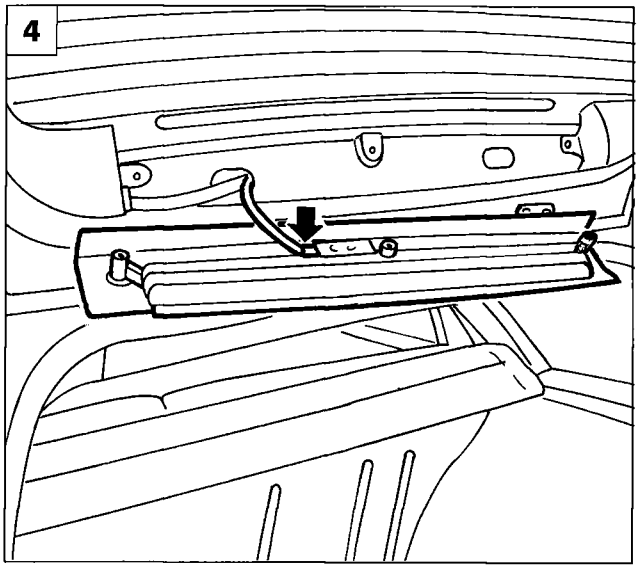

P4F031L04

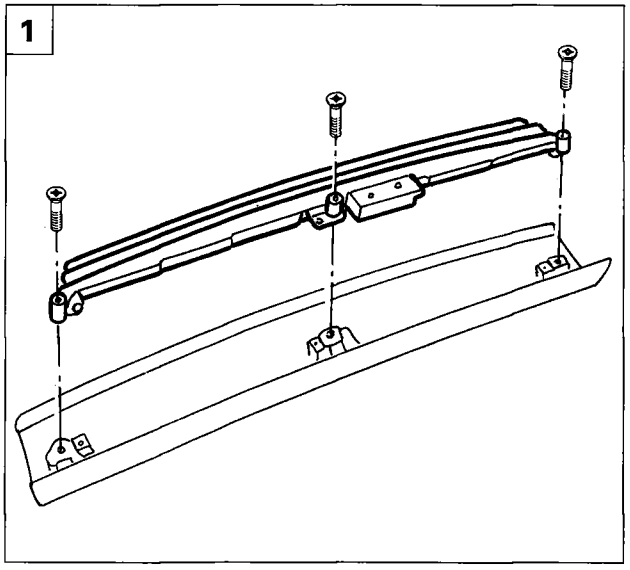

P4F032L01

1. Unscrew the bolts fastening and remove the supplementary brake light.

NOTE *The bulbs cannot be replaced.*

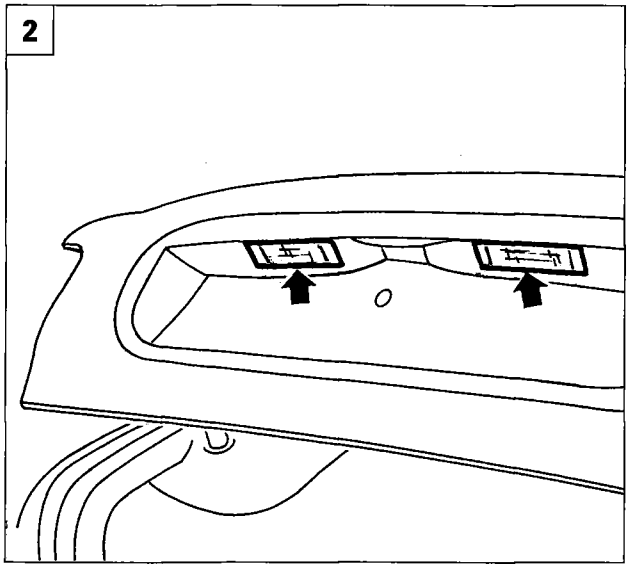

P4F032L02

NUMBER PLATE LIGHTS

NOTE *The procedure described refers to the "Marea"; the procedure for the "Marea Weekend" is exactly the same.*

Removing-refitting

2. Prise off the rear number plate and move slightly to one side.
3. Disconnect connector and remove the light.

Replacing the bulb

4. Release the bulb from the spring clips.

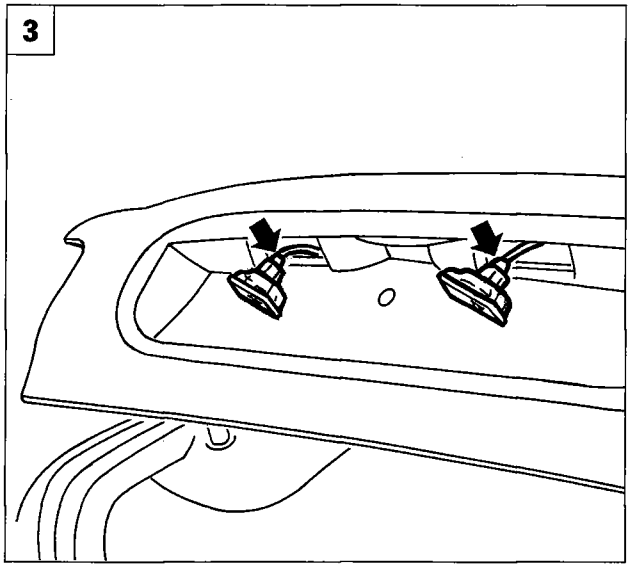

P4F032L03

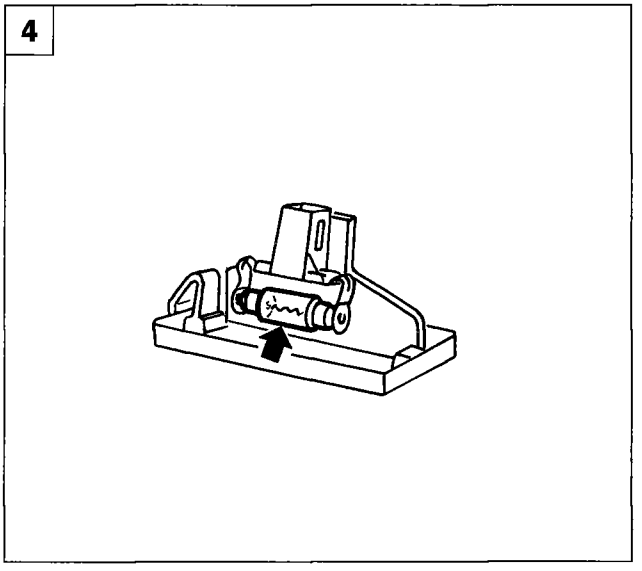

P4F032L04

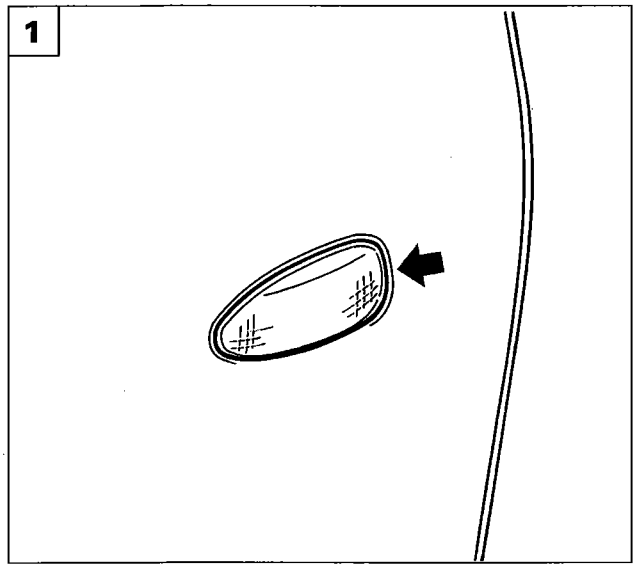

P4F033L01

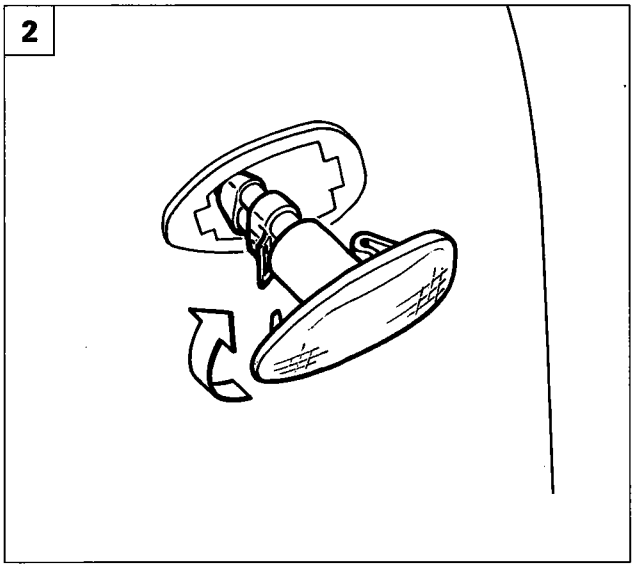

P4F033L02

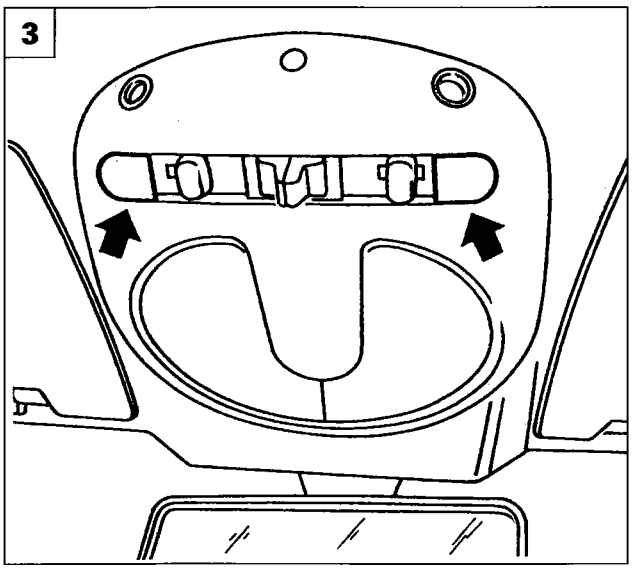

P4F033L03

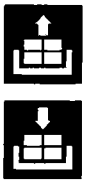

SIDE TURN SIGNAL

Removing-refitting

1. Insert a screwdriver at the arrowed point in order to release the turn signal from the body.
2. Disconnect connector from the bulb holder and turn the holder to release from the lens.

INTERIOR COURTESY LIGHTS

Removing-refitting upper interior courtesy light

3. Remove the panels arrowed.
4. Unscrew the screws indicated which retain the courtesy light to the body.
5. Disconnect electrical connections and remove the courtesy light from the vehicle.

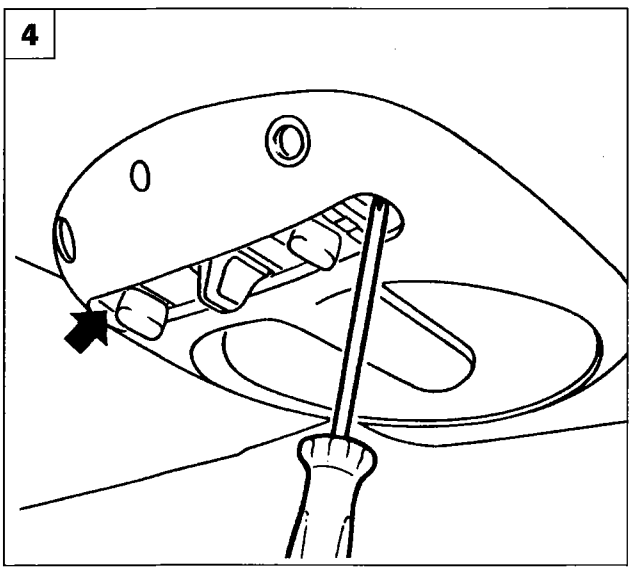

P4F033L04

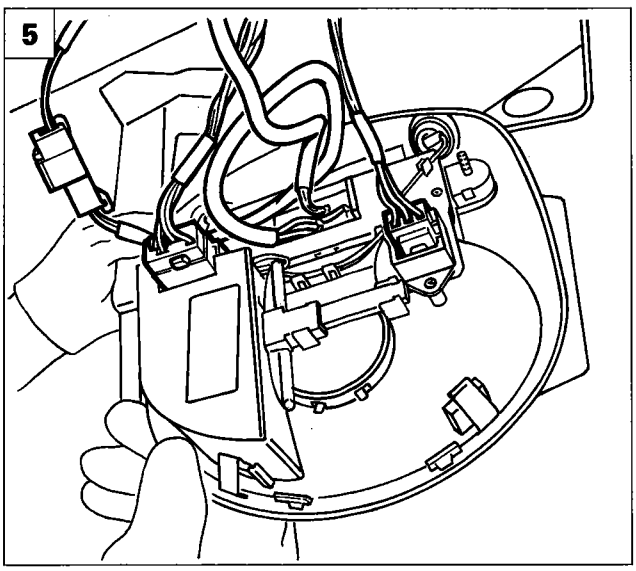

P4F033L05

Copyright Fiat Auto

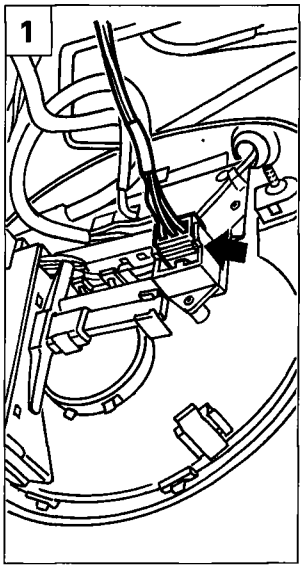

P4F034L01

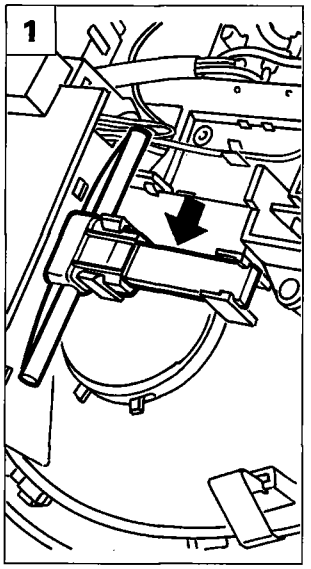

P4F034L02

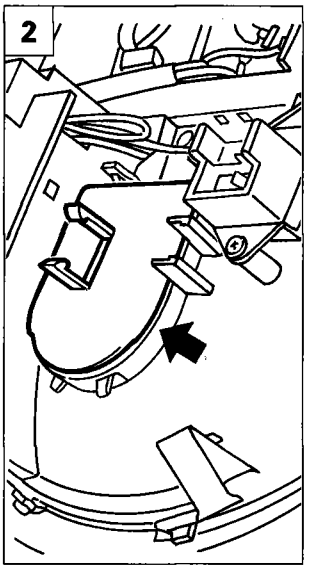

P4F034L03

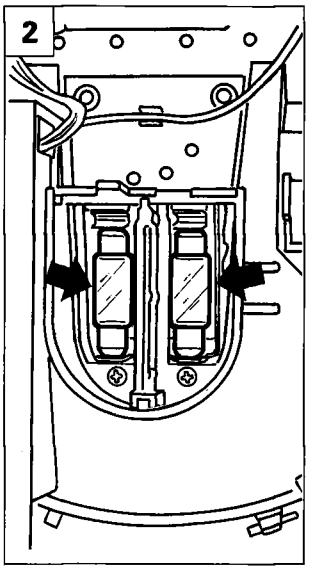

P4F034L04

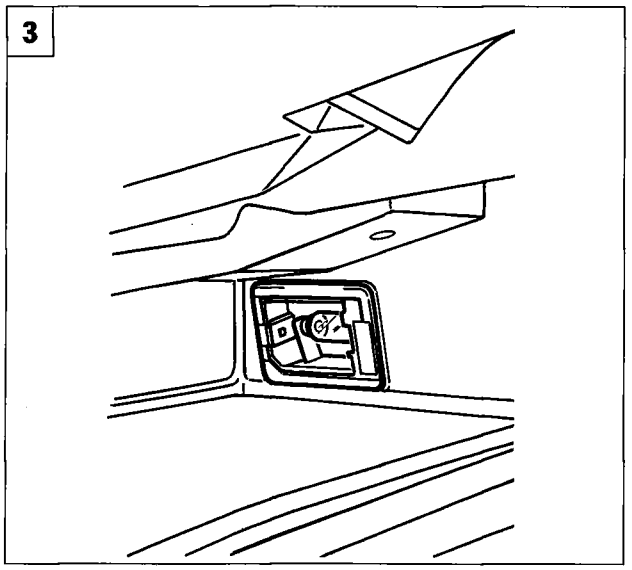

P4F034L05

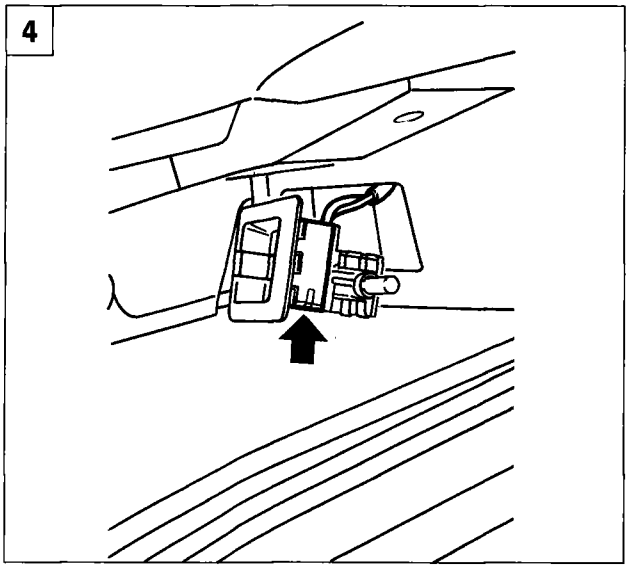

P4F034L06

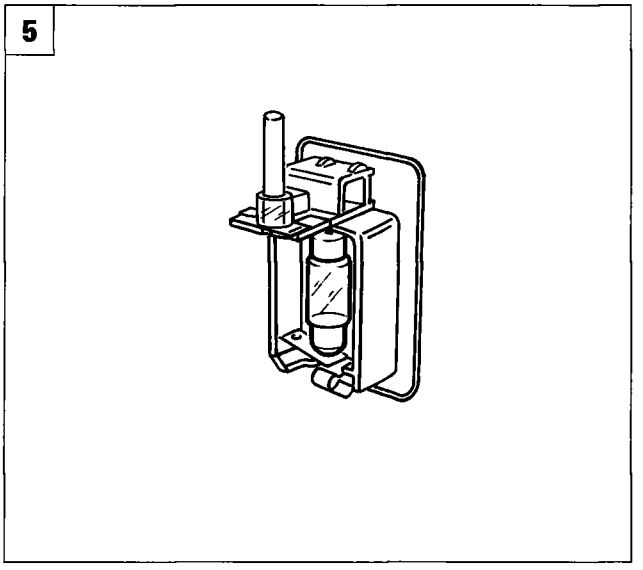

P4F034L07

Replacing vehicle courtesy light bulbs

1. Disconnect the connection and remove the part shown in figure.
2. Remove the protection and replace the relevant bulbs.

Removing-refitting facia compartment courtesy light and replacing the bulb

3. Prise up the edge of the courtesy light and remove from its housing.
4. Disconnect connector indicated and remove the courtesy light from the facia compartment.
5. Replace the relevant bulb.

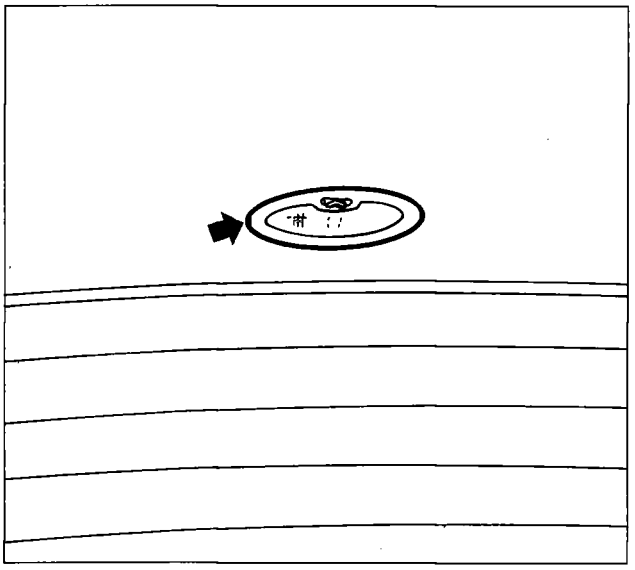

P4F035L01

Removing-refitting rear courtesy light and replacing bulb

- Insert a screwdriver in the side slot shown and prise the courtesy light from its housing.

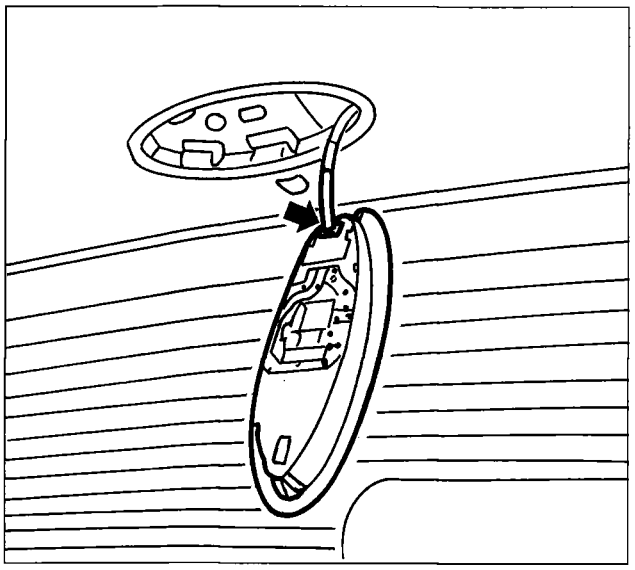

P4F035L02

- Disconnect connector and remove the courtesy light.

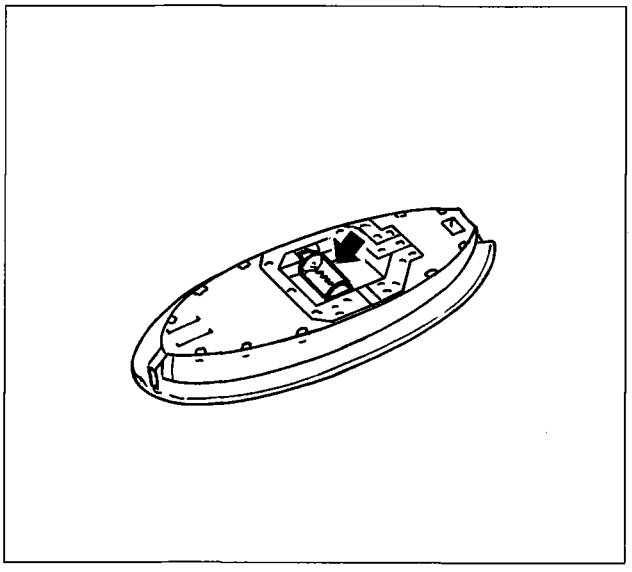

P4F035L03

- Release the bulb from the tabs and remove.

Copyright Fiat Auto

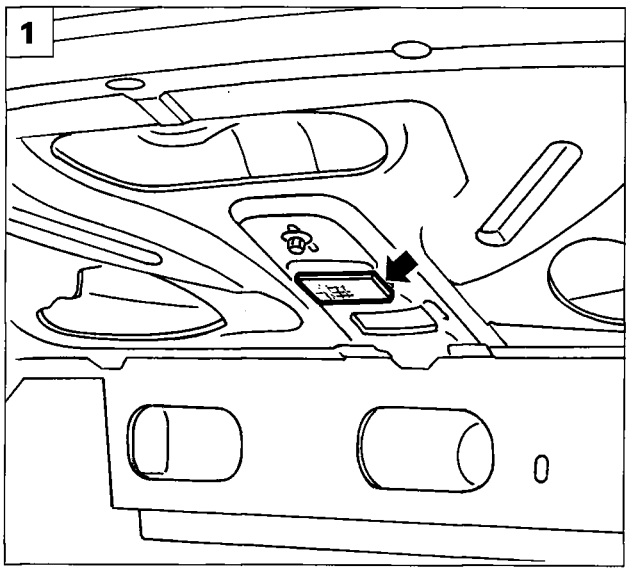

P4F036L01

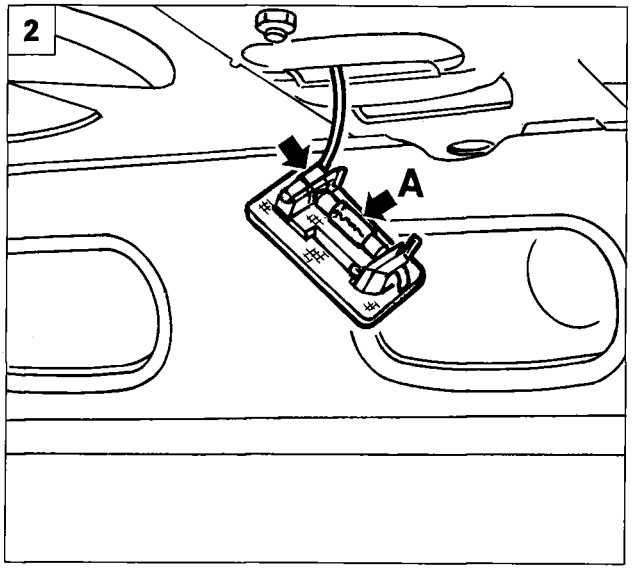

P4F036L02

Removing-refitting luggage compartment light and replacing bulb (Marea)

1. Open the boot lid and prise the courtesy light off the top of the compartment using a screwdriver.
2. Disconnect connector and remove the luggage compartment light.
   Replace bulb by releasing from the retaining strips (A).

Removing-refitting courtesy light on pillalr and replacing bulb (Marea Weekend)

3. Insert a screwdriver from the side indicated, prise off the courtesy light from the pillar.
4. Disconnect connector and remove the courtesy light.
   Release the bulb from the clips A and remove.

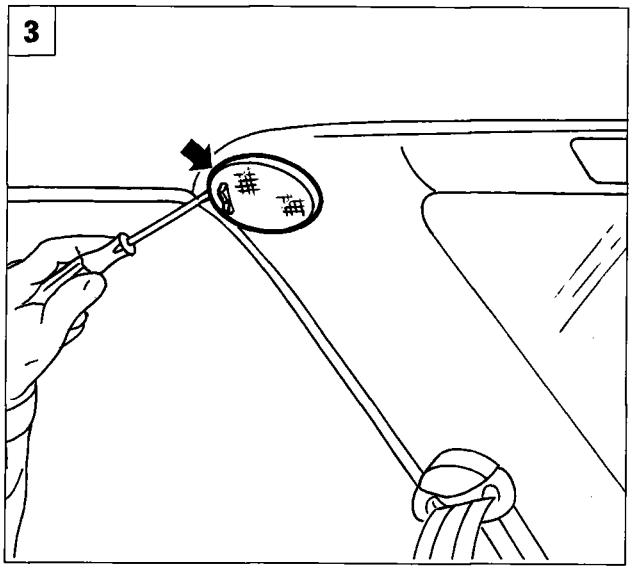

P4F036L03

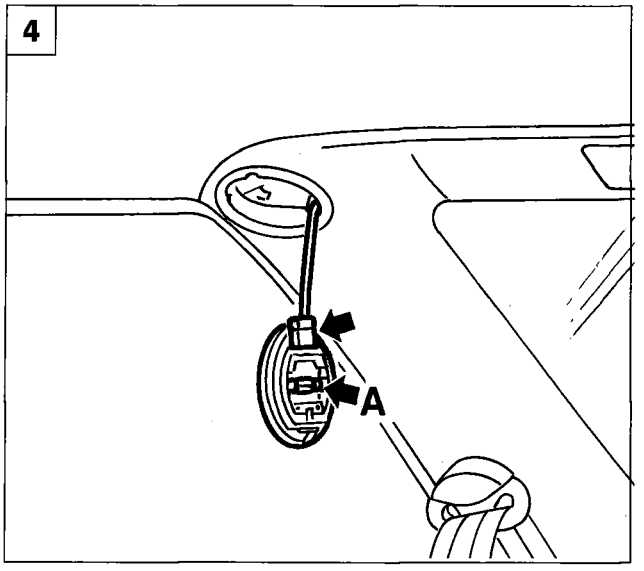

P4F036L04

INTEGRATED SERVICE CONTROL UNIT

A single electronic control unit, located beneath the facia trim on the right hand side manages a series of functions and checks which are normally carried out by several separate components.
The following functions are carried out:

- **FRONT WINDOW OPERATION:** carried out automatically for raising and lowering of the driver's side window and only for lowering on the passenger side
- **DOOR LOCK/RELEASE:** operated simultaneously by a key command, via front door switches or using a remote control unit. The tail-gate lock is also operated in the case of the Weekend.
- **TIMED OPERATION OF HEATED REAR WINDOWS** (and door mirrors)
- **TIMED PASSENGER COMPARTMENT LIGHTING:** the two front and rear courtesy lights are operated when the doors are opened by the key or by remote control. The relevant courtesy light is operated when the boot is opened.

In addition to the above four functons normally controlledby different devices, the integrated service control unit also allows a new function:
CENTRAL OPENING/CLOSURE OF DOORS AND WINDOWS: when the doors are locked using a key, front and rear windows and the sun-roof (if present) are closed if still open. When the doors are opened, the four windows are opened.
This is achieved by simply giving the key an extra twist in the lock for at least one second.

Control unit signals

Connector A
1 Passenger side window motor power supply - raise
2 Passenger side window control - lower
3 Passenger side window motor power supply - lower
4 Passenger side window earth.
5 Passenger side window control from driver's side - lower
6 Passenger side window control - raise
7 N.C.
8 Driver's side window motor power supply - raise
9 Driver's side window motor - lower
10 Driver's side window control - raise
11 Driver's side window control - lower
12 Central window open/close control
13 N.C.
14 N.C.
15 Power supply +30
16 Power supply +£0
17 N.C.
18 Passenger side window control from driver's side - raise
19 N.C.
20 Driver's side window earth

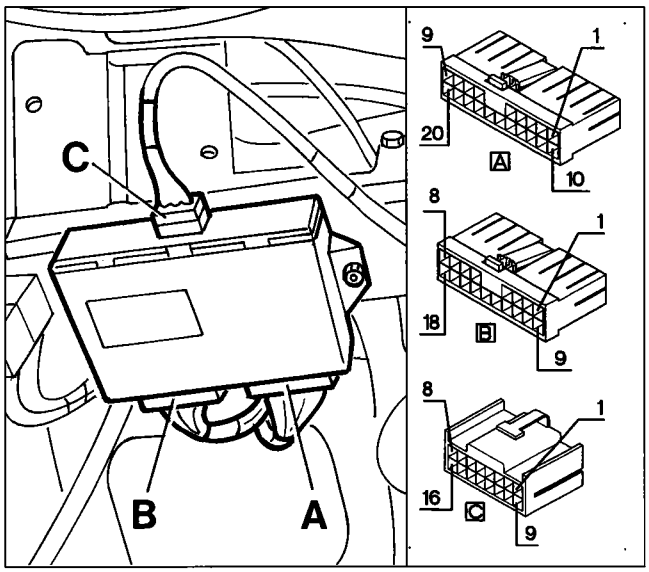

P4F11AL01 P4F11AL02

Connector B
1 N.C.
2 Driver's side front door switch for interior lights
3 Passenger side front door switch for inerior lights
4 Door lock motor power supply (release)
5 Door lock motor power supply (lock)
6 Timed courtesy light activation signal
7 Power supply +15
8 Power supply +30
9 Heated rear window relay power supply
10 N.C.
11 Output for heated rear windscreen warning light
12 N.C.
13 Earth for electronic equipment
14 Heated rear window control
15 Control from front lock (from key or switches) for lock
16 Control from front locks (from key or switches) for release
17 Heated rear window control from air conditioner (MAX DEF)
18 N.C.

Connector C
1 Timed rear courtesy light power supply
2 Timed boot light power supply
3 Timed front courtesy light power supply
4 Output for sun-roof closure
5 N.C.
6 Lock command from remote control
7 Rear driver's side door switch for interior lights
8 N.C.
9 Output for rear window closure
10 Output for rear window opening
11 N.C.
12 N.C.
13 Passenger side rear door switch for interior lights
14 Boot switch for interior lights
15 Release command from remote control
16 N.C.

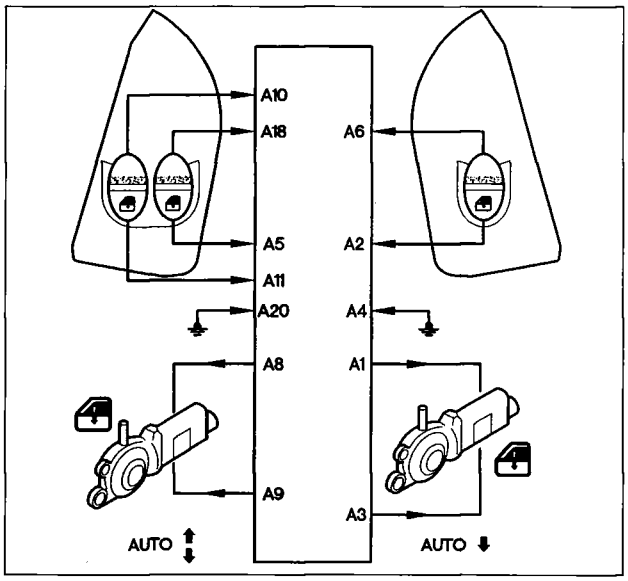

P4F12AL01

FRONT WINDOW OPERATION

This is carried out automatically for raise and lower function for the driver's side window. Only the lower function is automatic on the passenger's side.

Operation is manual when the key operation time is between 60 and 300 milliseconds. Operation is automatic when the key operation time is longer than 300 milliseconds. The window stops when the key is operated in the opposite direction.

Safety systems

The windows are stopped (elecrical power to the motor turned off) when the glass reaches the top or bottom of its travel, or if an obstacle is inserted and blocks the glass. This is regulated by continual self--adaptive control of the direct current motor.
The control unit operates as follows:

- if the motor control signal is cut off during operation, the control unit de-activates the system within a maximum time of 500 milliseconds: this interruption is recordedwhen the current taken up by the window motor (continually monitored) is found to be less than 0.8 A ;
- if the control buttons are found to be faulty (short circuit or keys stuck down), when the control unit is activated, the relevant control is inhibited until the defect disappears (or the key is released) for a time greater than 60 milliseconds

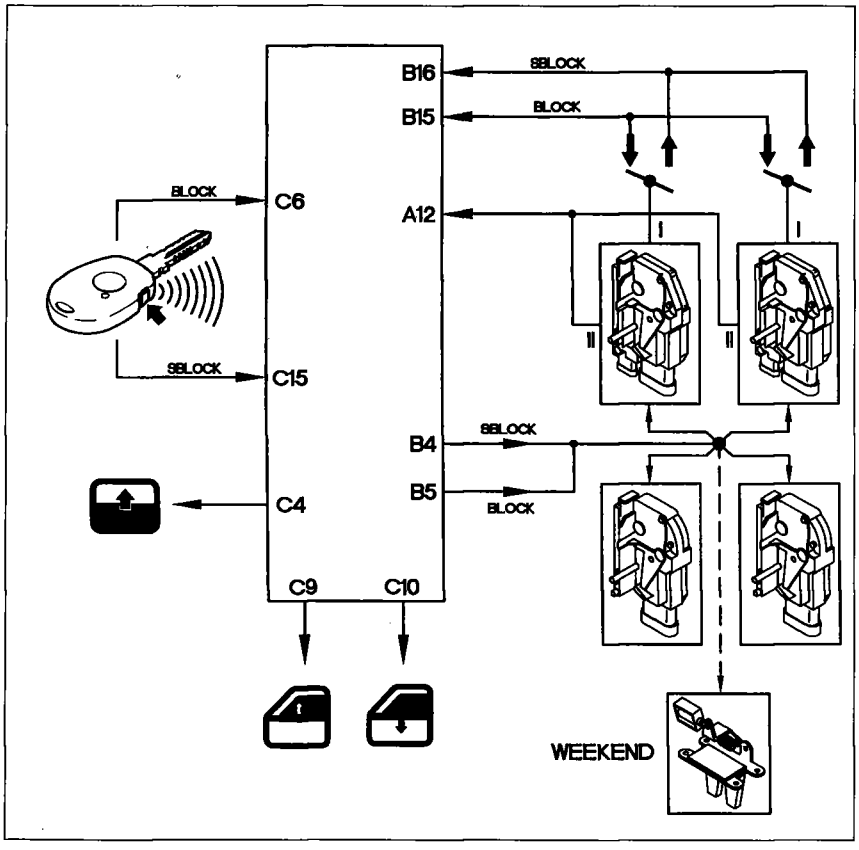

P4F12AL02

DOOR LOCK / RELEASE

The locks are operated simultaneously by a command from the key, front door switches (knobs) or remote control. The tail-gate lock is also operated in the case of the Weekend.

NOTE *The lock is carried out only with the doors properly closed and locks released. Conversely, release occurs with the doors properly closed and the locks locked.*

A system inside the electronic control unit system carries out a series of safety checks:
- at the end of each operation, it reads the position of the switches. If this position does not agree with the operation carried out, the operation is repulsed. If it agrees with the operation caried out, everything remains as normal. Repulsion occurs after a lock or release manoeuvre.
- if the motors receive a close command and the operation is not carried out proper-ly - i.e. the controls do not agree - or a door is open (only in the case of a release manoevre) the circuit carries out a backward, opposite manoeuvre to re-align the lock.
- if the control unit records more than one consecutive, complete lockl/release manoeuvre at least 8 during a 20 second interval the system intervenes to operate the manoeuvre limiter, i.e. the system remains inhibited in released position for a period of 30 seconds.
- if battery voltage drops below 9 V, the system cuts out.

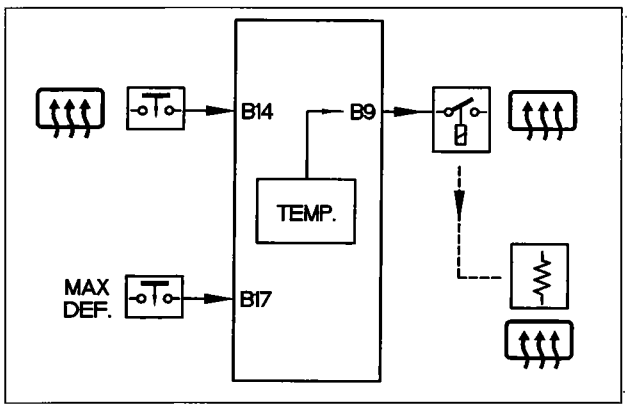

P4F13AL01

TIMED OPERATION OF HEATED REAR WINDOW (and door mirrors)

The control unit supplies the heated rear window (and the remaining door mirror demister coils) in timed mode, according to the following system:
- key is turned to MAR
- an activation signal arrives from a switch on the facia
- an activation signal arrives from the air conditioner (MAX DEF)

The power supply is turned off if:
- the key is turned to STOP or removed
- a deactivation signal arrives from the switch on the facia
- a MAX DEF function deacivation signal is received

If one of these two signals is not received, the timer keeps the coils activated for 20 MINUTES, in accordance with a specific control system:
- the power supply is maintained for the first 10 MINUTES
- DURING THE NEXT 10 MINUTES, the power supply is cut off if the battery voltage drops below 11.6 V (and restored if the voltage rises to and exceeds 13 V).

When the heated rear window remains active, the warning light comes on too.

NOTE *The switch control on the facia always takes priority over the MAX DEF function, i.e. the rear window goes off if it is activated by means of the MAX DEF function and the switch on the facia is pressed.*

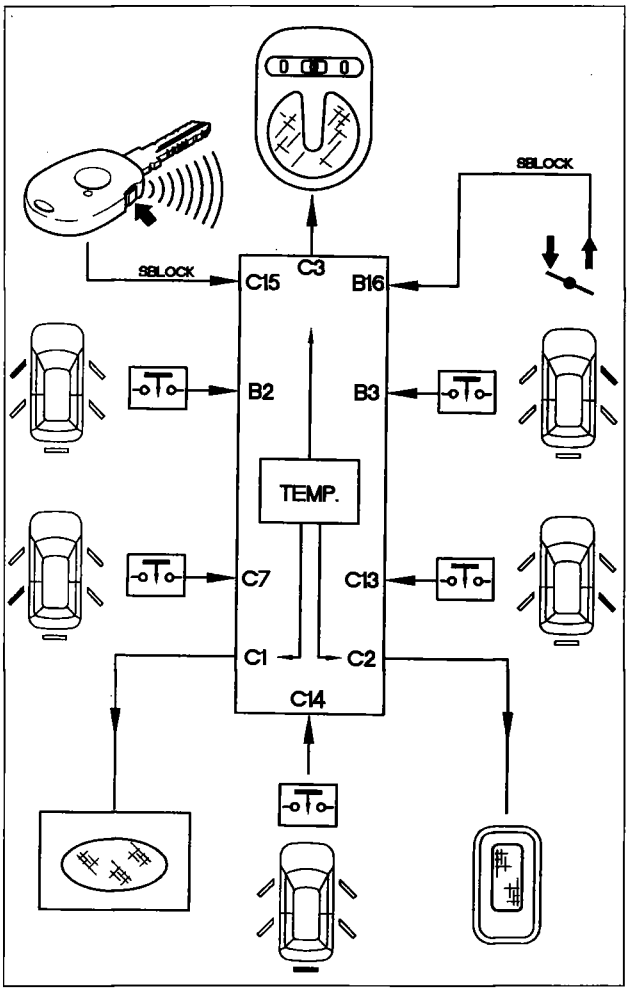

P4F14AL01

TIMED PASSENGER COMPARTMENT LIGHTING

When the doors are released by the key or remote control, both front and rear lights are operated in timed fashion according to the following system:

- time of 7 SECONDS following door reclosure. Timing is cut off when the key is turned to MAR: thish allows the driver to enter the vehicle and insert the key

- time of 3 MINUTES if the door remains open: this prevents the battery going flat if the vehicle is left with door open.

NOTE *When any door is opened, the time is calculated from the beginning again.*

TIMED BOOT OPENING

When the boot is opened, the luggage compartment light comes on for 20 MINUTES: timing stops when the boot is closed.

CENTRAL OPENING/CLOSURE OF DOORS AND WINDOWS

The front door locks contain TWO SWITCHES:
- the first is a normal switch which is closed by operating the key or the inner knob. This sends out a door lock or release request.
- the second switch closes subsequently if the key is kept turned and sends out an central opening or locking command to the doors and windows.

The system implements this strategy only if:
- the signal from the second switch persists for more than one second.
- the doors are properly closed
- at least 60 seconds have elapsed since the door lock / release request (i.e.from the time the first switch is closed)

If the signal is cut off, operation stops immediately.

The control unit operates the front windows direclty, while it sends a closure signal to the sun-roof motor relay and a close or open signal to the rear window control unit.

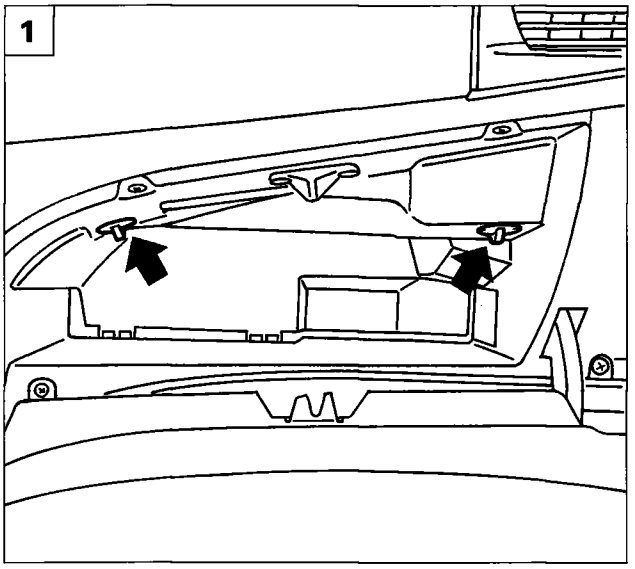

P4F041L01

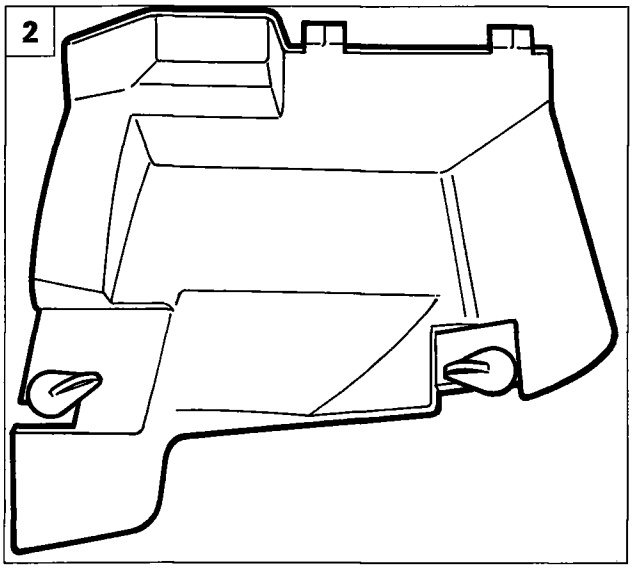

P4F041L02

REMOVING-REFITTING SERVICE CONTROL UNIT

1. Open the glove compartment and turn the levers indicated.
2. Remove the compartment lining from the vehicle.
3. Unscrew both retaining screws.
4. Disconnect control unit from seat, after disconnecting the three connectors.

NOTE *Reverse order of removal operations to refit.*

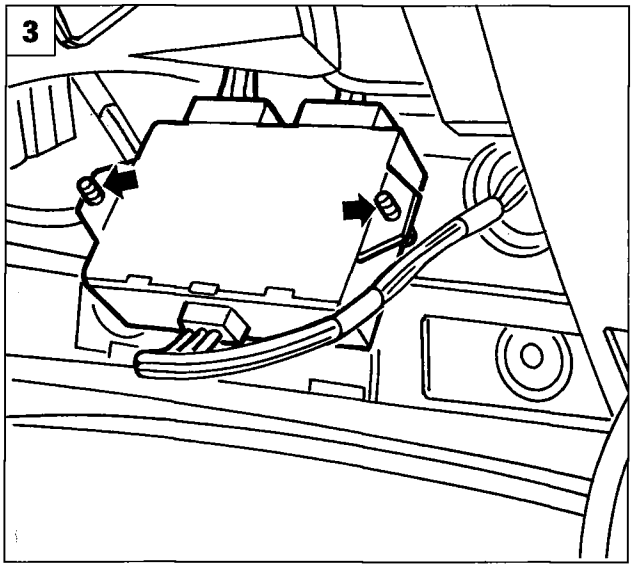

P4F041L03

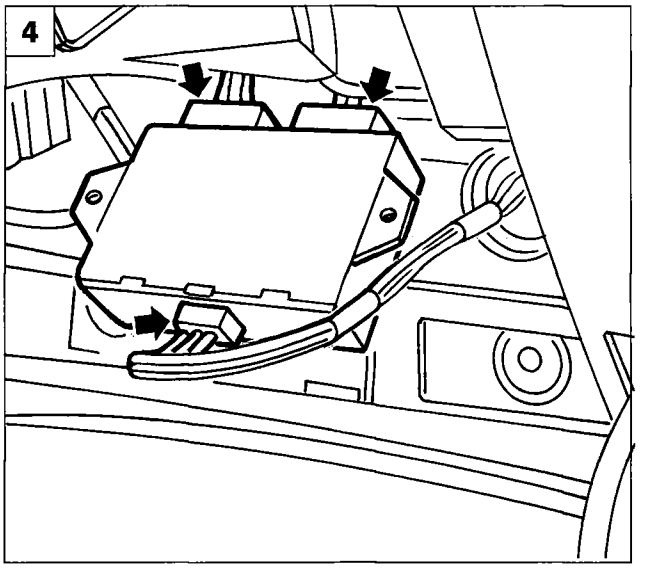

P4F041L04

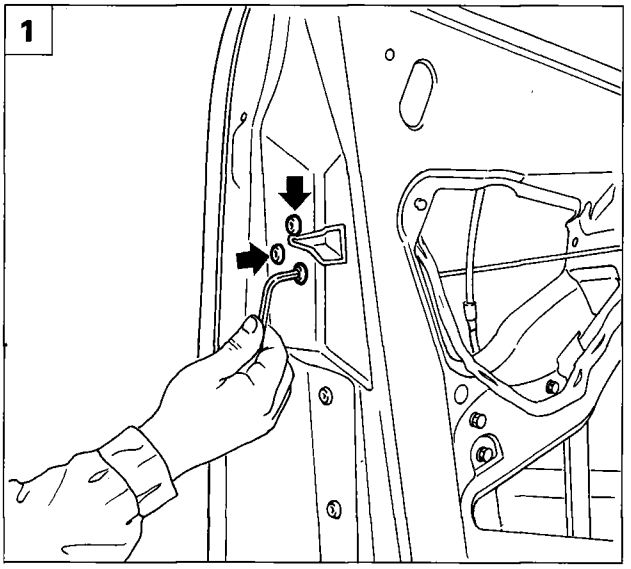

P4F042L01

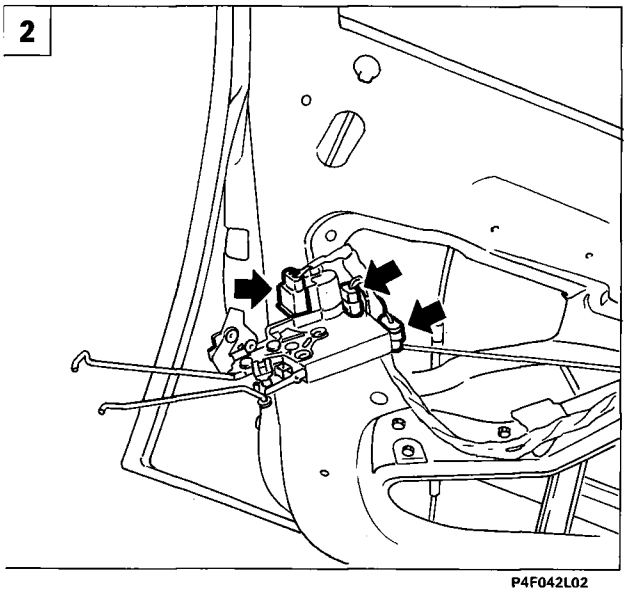

P4F042L02

REMOVING-REFITTING DOOR LOCKS

- Remove the door panel and protective trim and the outer door handle as described in Section 70.

1. Unscrew the bolts fastening the lock to the door.
2. Remove the lock from the door by disconnecting the connectors indicated by arrows and the door opening linkage.

NOTE *Reverse order of removal operations to refit.*

Front lock wiring diagram:

connector A: when pin 1M is supplied at 12 V (with pin 2M earthed), the lock is released:
when pin 2M is supplie at 12 V (with pin 1M earthed), the lock is locked.

connector B: the first contact controls release by sending an earath from pin 2 and controls locking by sending an earth from pin 3.
The second contact controls window opening/closure by sending an earth from pin 4.

connector C: when the door is opened, the contact closes to send an earth from pin A.

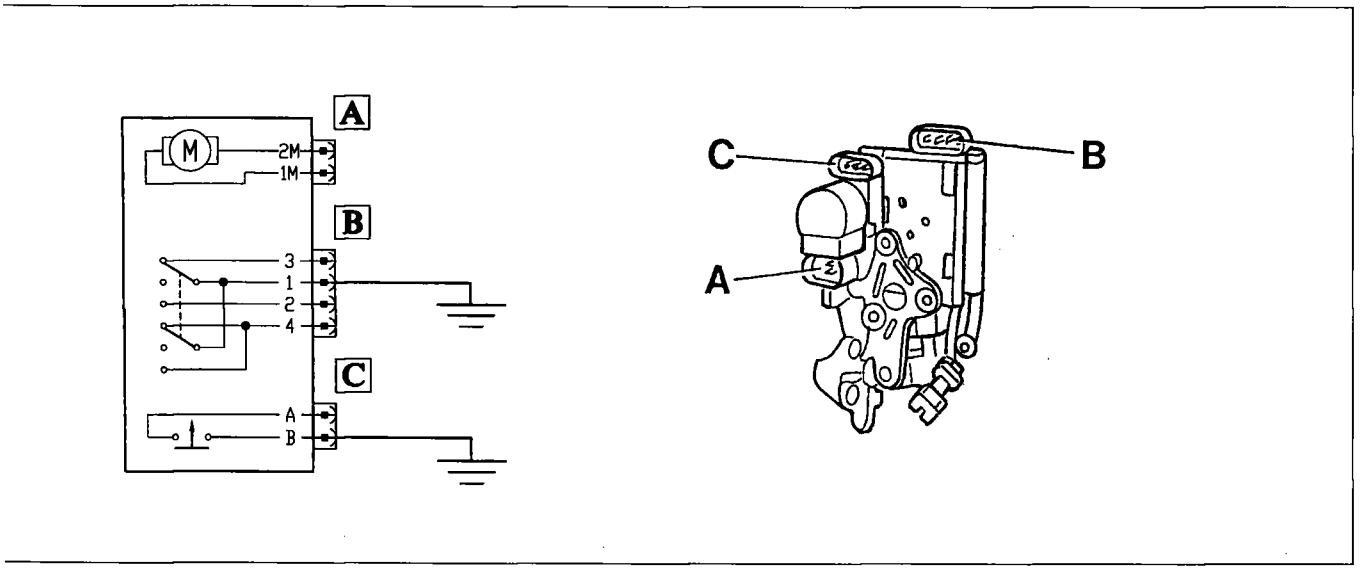

P4F042L03

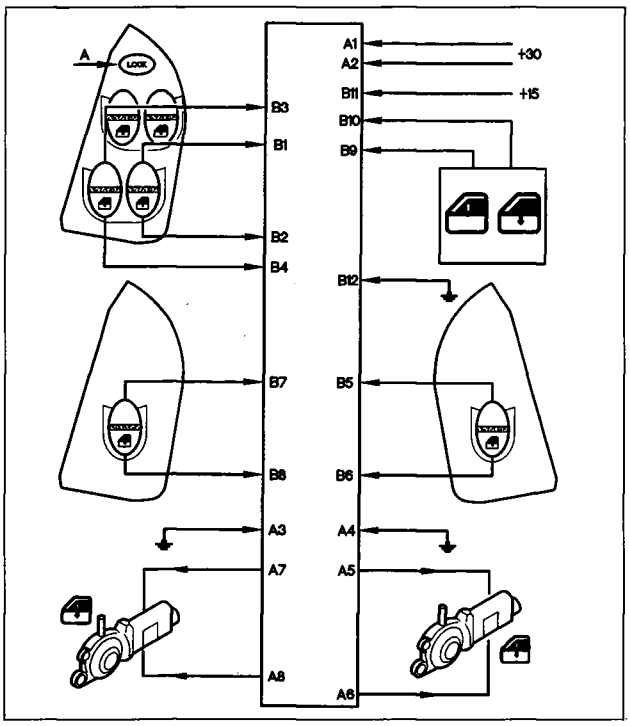

P4F16AL01

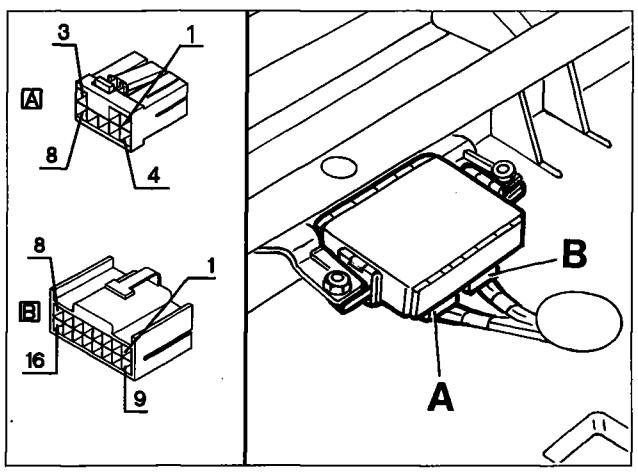

P4F16AL03 P4F16AL02

Connector A

1 +30
2 +30
3 Earth
4 Earth
5 Right hand motor power supply
6 Right hand motor power supply
7 Left hand motor power supply
8 Left hand motor power supply

REAR WINDOW OPERATION

Whereas the ELECTRICALLY-OPERATED FRONT WINDOWS are controlled by the integrated service control unit (see previous pages), the ELECTRICALLY-OPERATED REAR WINDOWS are operated by a control unit located beneath the rear seat.

The control unit controls the operation of the two rear windows, which are operated by a button on the door or by a button located at the front on the driver's door.

The control unit permits automatic operation.

Operation is manual when the key operating time is between 60 and 300 milliseconds.

Operation is automatic when the key operating time exceeds 300 milliseconds.

The windows stop when the key is operated in the opposite direction.

For safety reasons, the electrically-operated window control may be cut out by means of key (A).

The rear windows may be operated at the same time as the front windows by the integrated service control unit (see previous pages).

NOTE *The control unit control and safety systems are more or less the same as for the front windows (see previous pages).*

Control unit signals

Connector B

1 Right-hand window control from front door (raise)
2 Right-hand window control from front door (lower)
3 Left hand window control from front door (raise)
4 Left-hand window control from front door (lower)
5 Right-hand window control from rear door (lower)
6 Right-hand window control from rear door (lower)
7 Left-hand window control from rear door (raise)
8 Left-hand window control from rear door (lower)
9 Closure signal from service control unit
10 Opening signal from service control unit
11 +15
12 Earth (electronic)
13 N.C.
14 N.C.
15 N.C.
16 N.C.

Copyright Fiat Auto

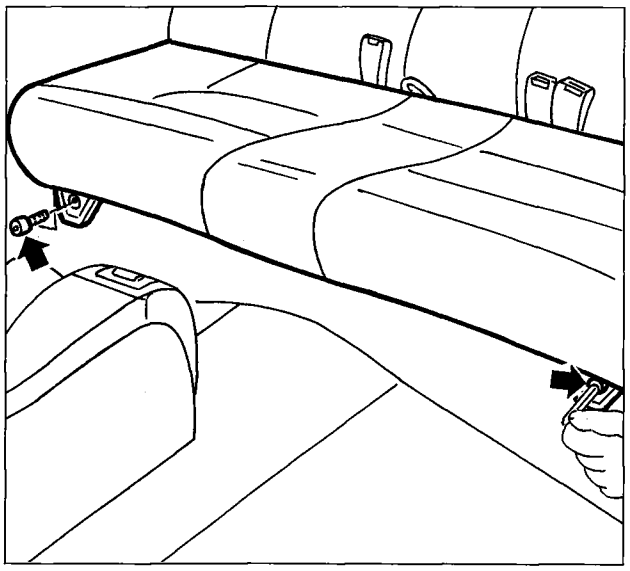

P4F044L01

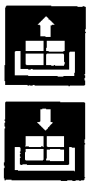

REMOVING-REFITTING CONTROL UNIT REAR ELECTRICALLY-OPERATED WINDOWS

- Version with fixed rear seat: unscrew the bolts fastening the rear cushion to the body and remove from the vehicle.

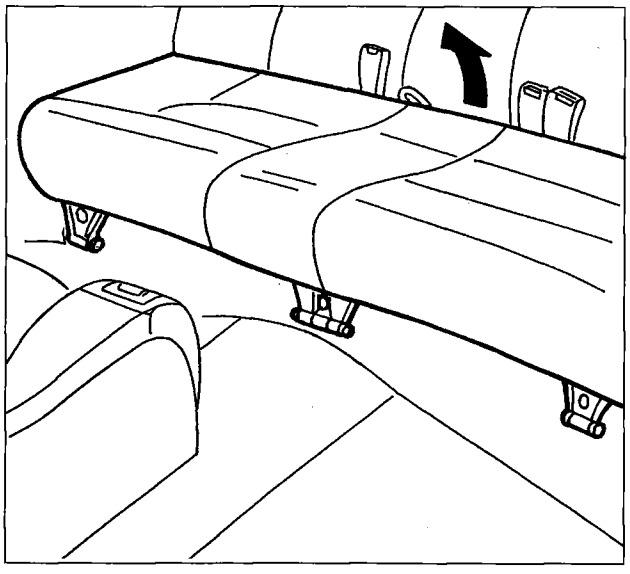

P4F044L02

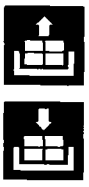

- Version with fold-down rear seat: raise the rear seat cushion completely.

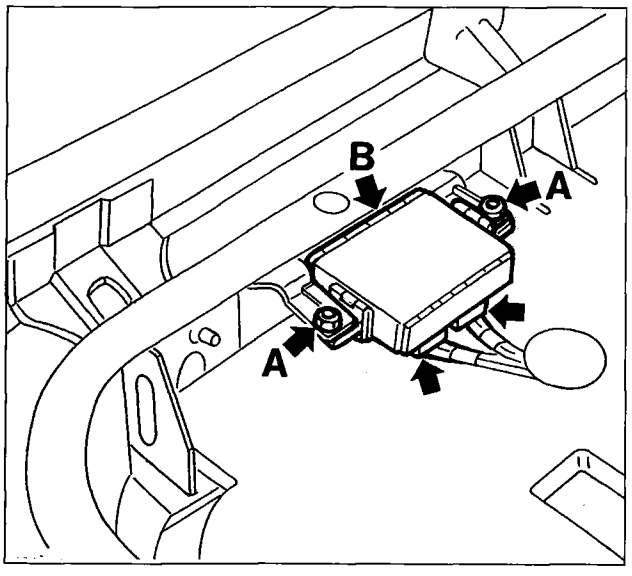

P4F044L03

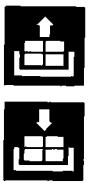

- Unscrew bolts (A); move window control unit (B) slightly to one side, disconnect the connector and then remove.

NOTE *Reverse order of removal operations to refit.*

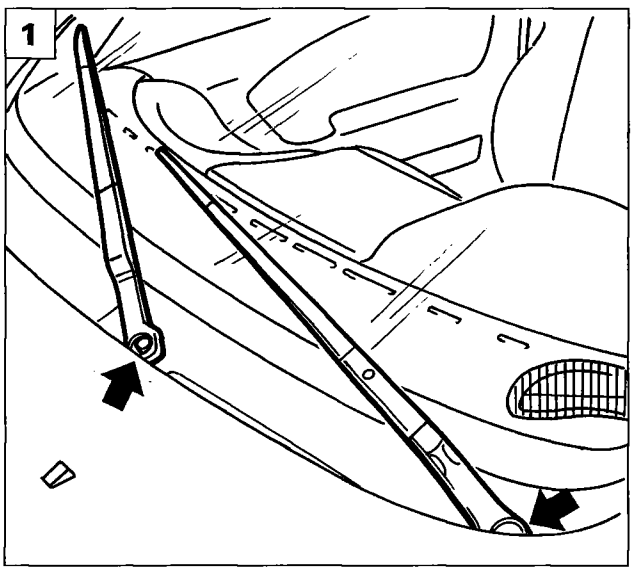

P4F045L01

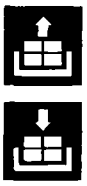

REMOVING-REFITTING WINDSCREEN WIPER MOTOR

1. Remove the protective plugs, then undo retaining nuts and remove the windscreen wiper arms.
2. Raise the vehicle bonnet, unscrew the bolts indicated and remove the trim beneath the windscreen glass.

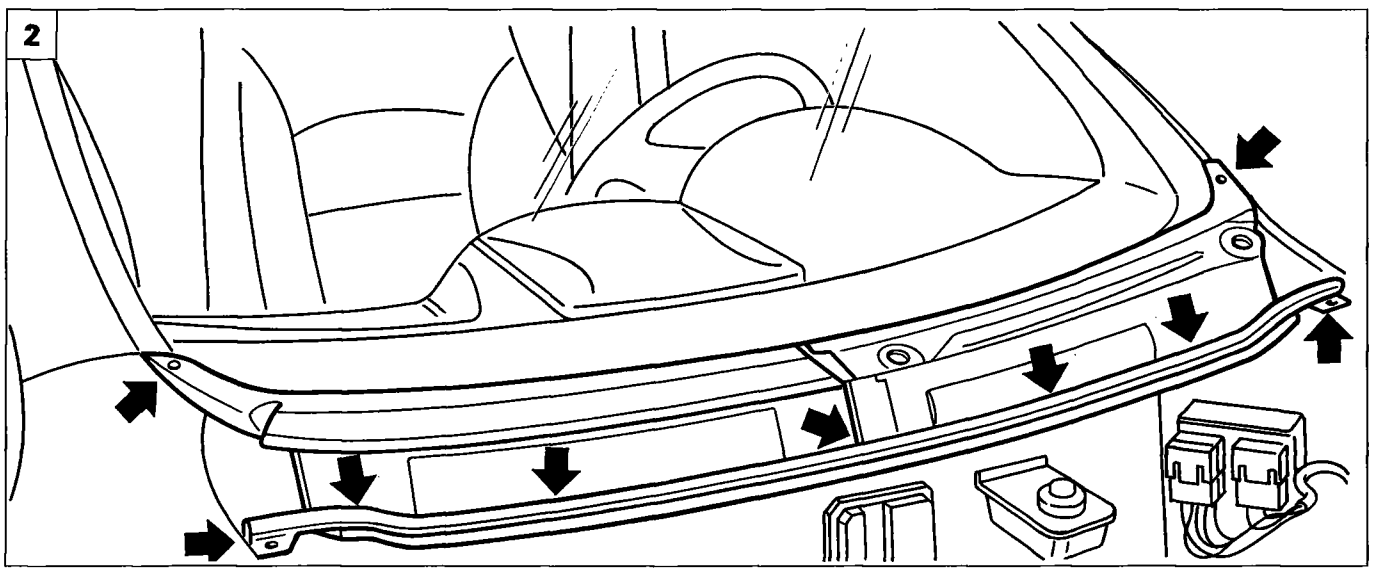

P4F045L02

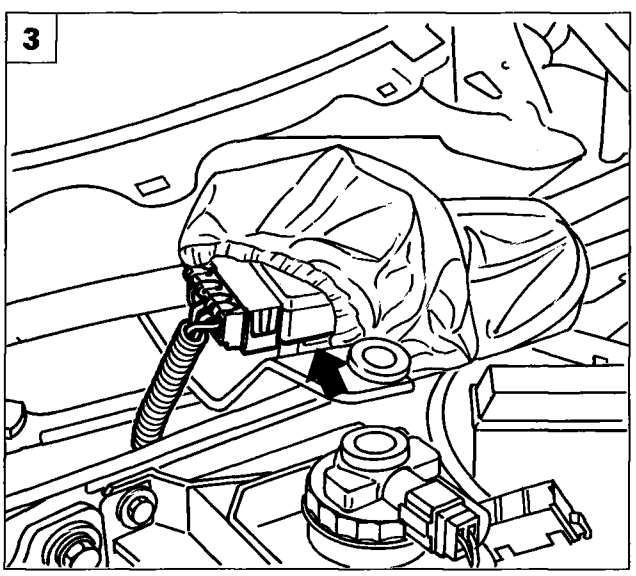

P4F045L03

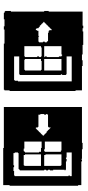

3. Raise the windscreen wiper motor and disconnect connector indicated.

55.

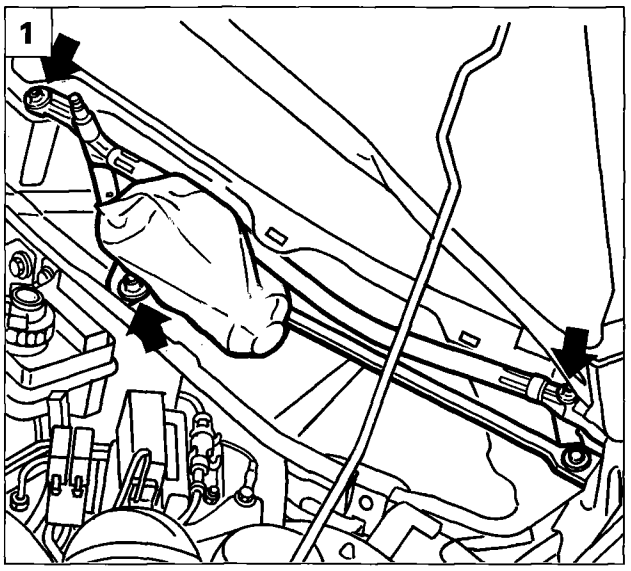

P4F046L01

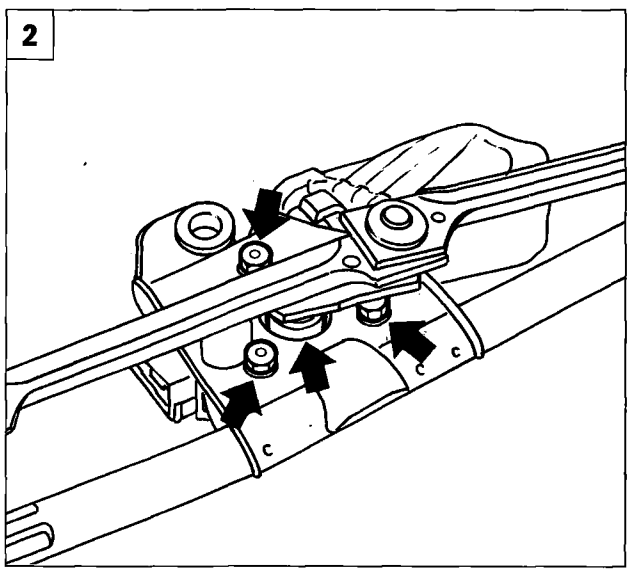

P4F046L02

1. Unscrew the bolts indicated and remove the windscreen wiper assembly from the vehicle.
2. Unscrew bolts and nut indicated.
3. Separate windscreen wiper motor from linkage.

NOTE *Reverse order of removal operations to refit.*

Replacing windscreen wiper brush

4. To replace the windscreen wiper brush, press the key shown in the figure and withdraw in the arrowed direction.

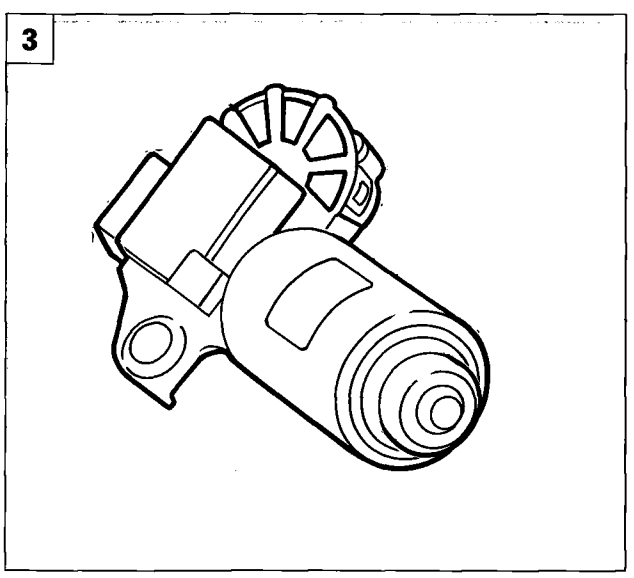

P4F046L03

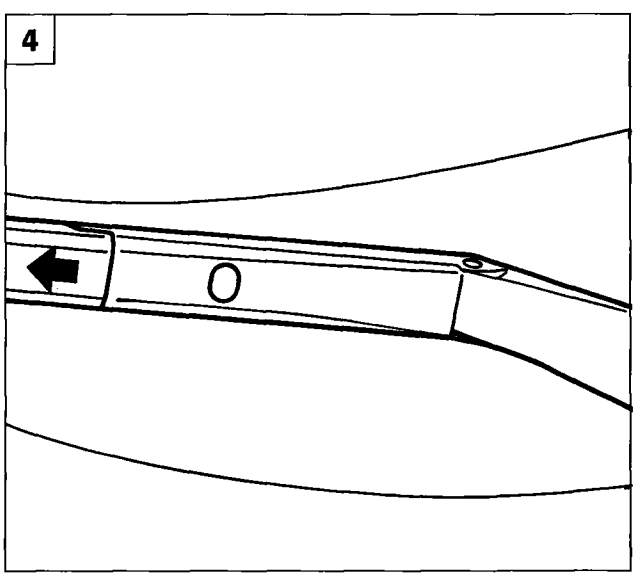

P4F046L04

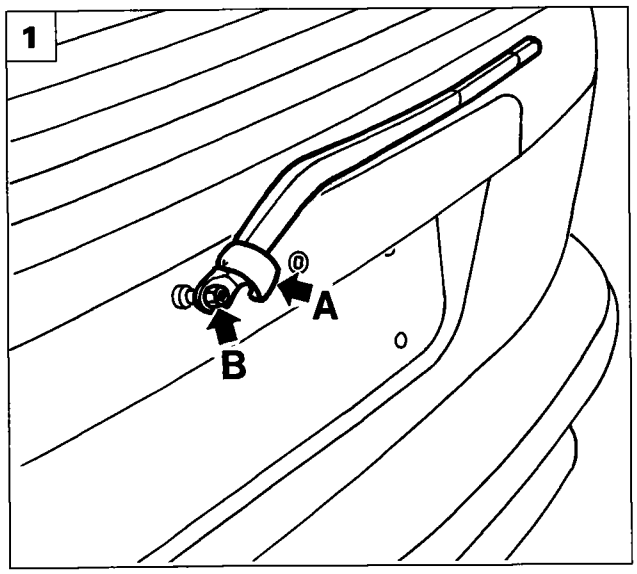

P4F047L01

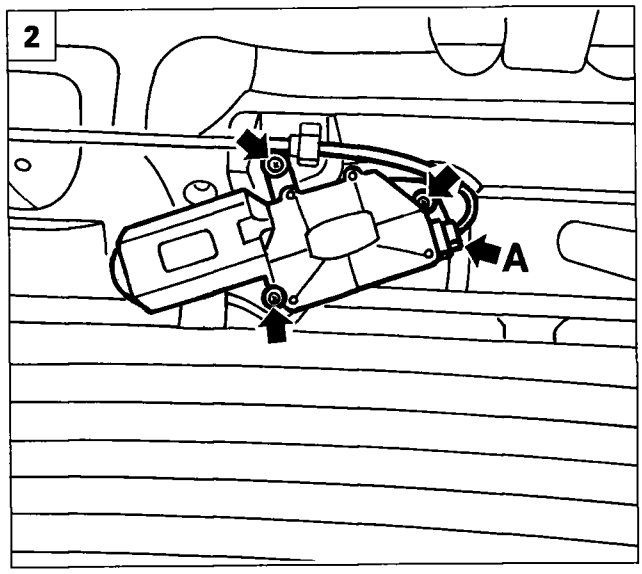

P4F047L02

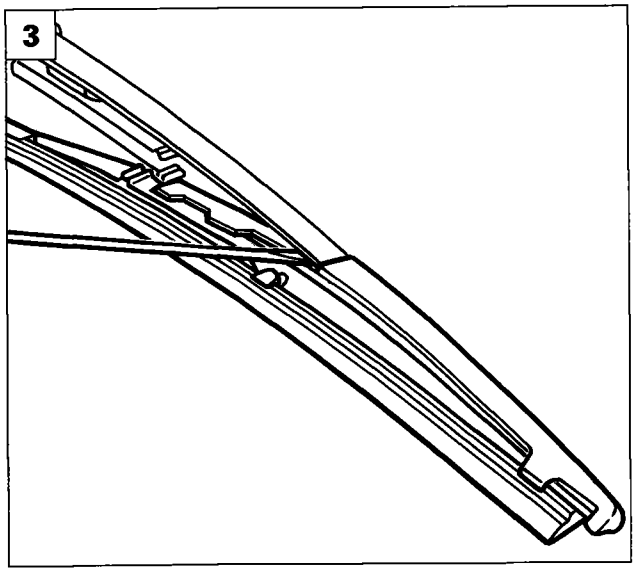

P4F047L03

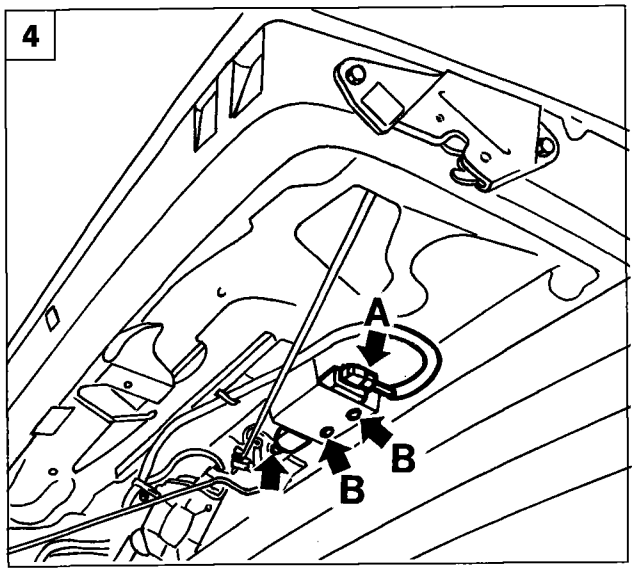

P4F047L04

REMOVING-REFITTING REAR WIPER MOTOR

- Remove the lower tail-gate panel (see Group 70).

1. Lift cover (A).
   Unscrew nut (B), then remove windscreen wiper arm.
2. Working from inside the tail-gate, disconnect the connector (A).
   Unscrew the bolts indicated, then remove the rear wiper motor.

NOTE *Reverse order of removal operations to refit.*

Replacing rear wiper blade

3. Working from both sides of the blade holder, as shown in the figure, remove the blade from the vehicle.

REMOVING-REFITTING TAIL-GATE LOCK MOTOR

- Remove the lower tail-gate panel (see Group 70).

4. Disconnect connector (A) from the lock motor.
   Unscrew bolts (B) and remove the motor by disconnecting from the mechanism.

NOTE *Reverse order of removal operations to refit.*

Copyright Fiat Auto

55.

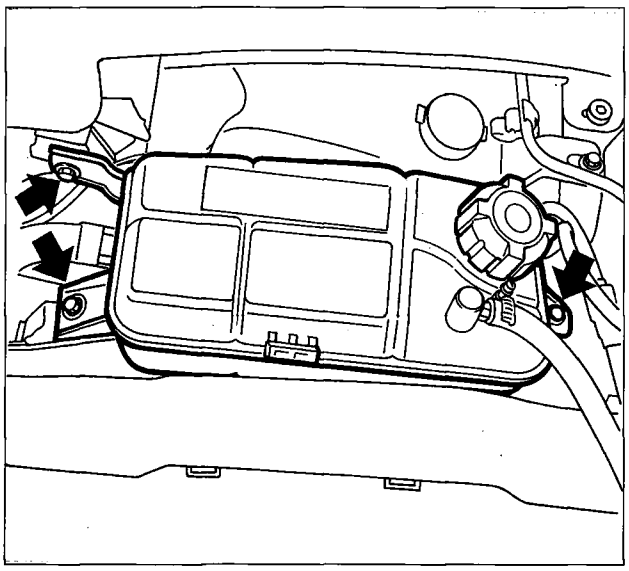

P4F048L01

REMOVING-REFITTING SCREEN/REAR WINDOW WASHER PUMP

- Lift the bonnet lid.
- For all versions except 1370 version: unscrew the bolts fastening the engine coolant reservoir, then move it to one side to gain access to the electric windscreen washer/rear window pump.

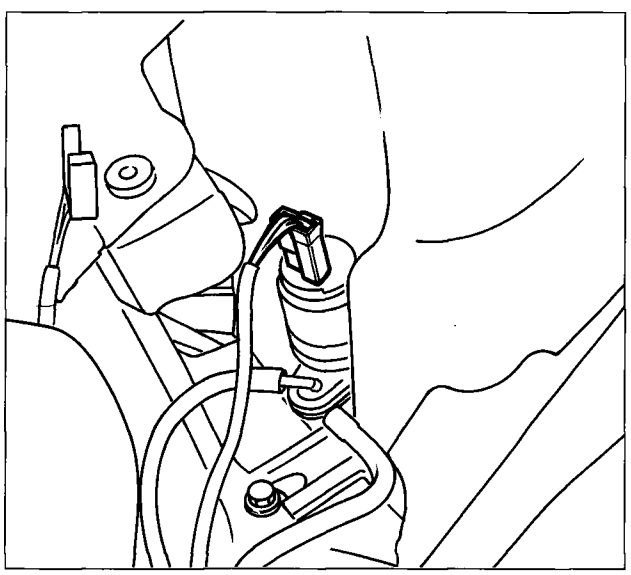

P4F048L02

- Drain the washer fluid from the reservoir and recover.
- Disconnect the pump supply connector. Disconnect the washer pipes.

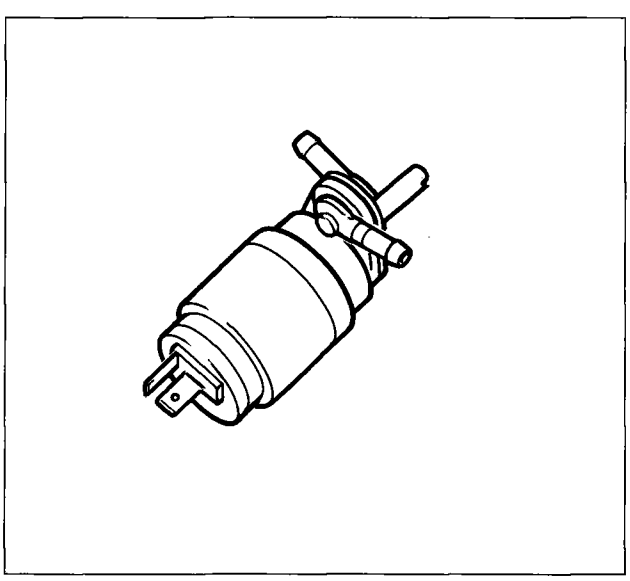

P4F048L03

- Remove the pump from the reservoir.

NOTE *Reverse order of removal operations to refit.*

REMOVING-REFITTING HEADLAMP WASHER PUMP

Proceed as indicated above for screen/rear window washer pump.

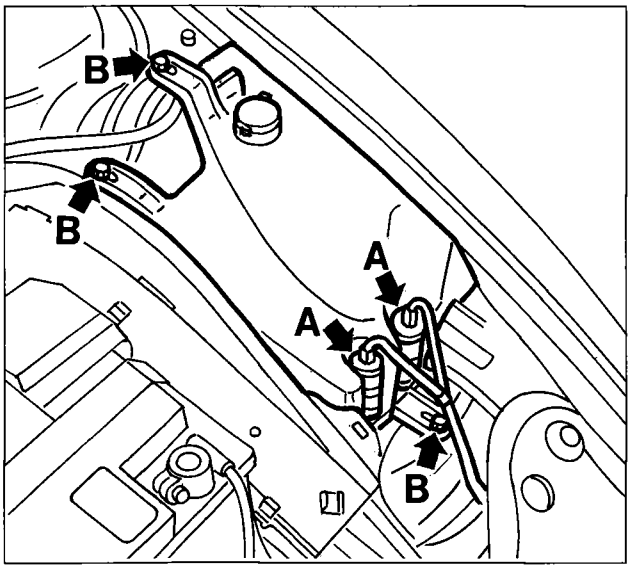

P4F049L01

REMOVING-REFITTING WINDSCREEN WASHER RESERVOIR

(1370 engine version)

- Raise the bonnet lid.
  Release and remove pump (A) from the washer fluid reservoir and recover the liquid.
  Unscrew reservoir retaining bolts (B).

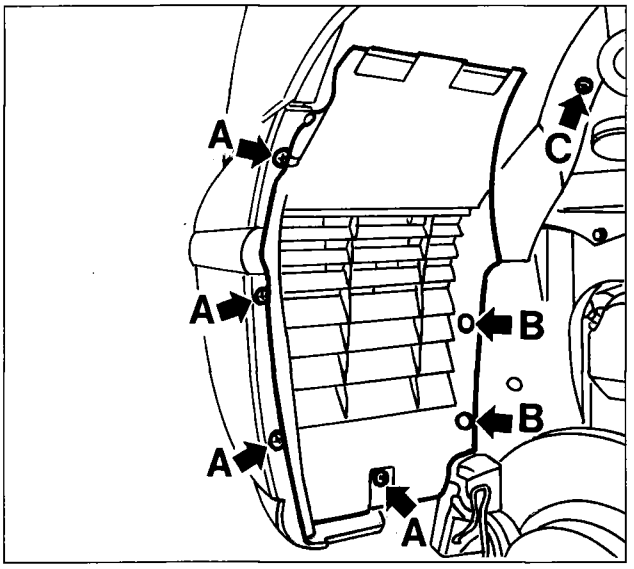

P4F049L02

- Remove the left front wheel.
  Unscrew bolts (A) and undo plugs (B), then remove the front part of the wheel protection.
  Undo bolt (C).

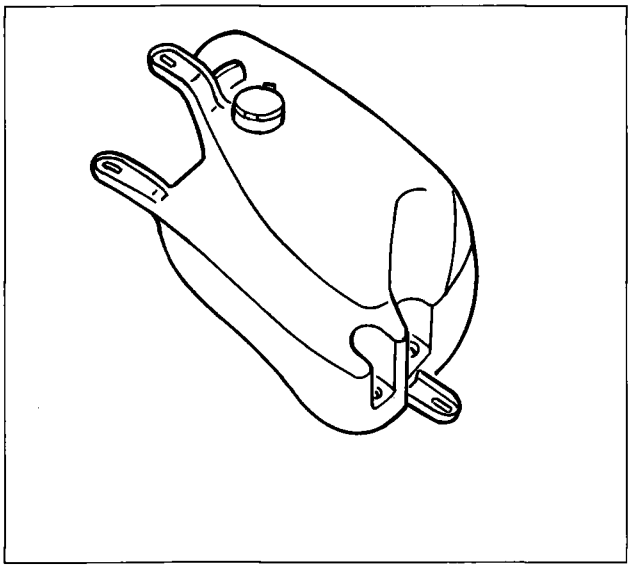

P4F049L03

- Allow the washer reservoir to come down and remove.

NOTE *Reverse order of removal operations to refit.*

55.

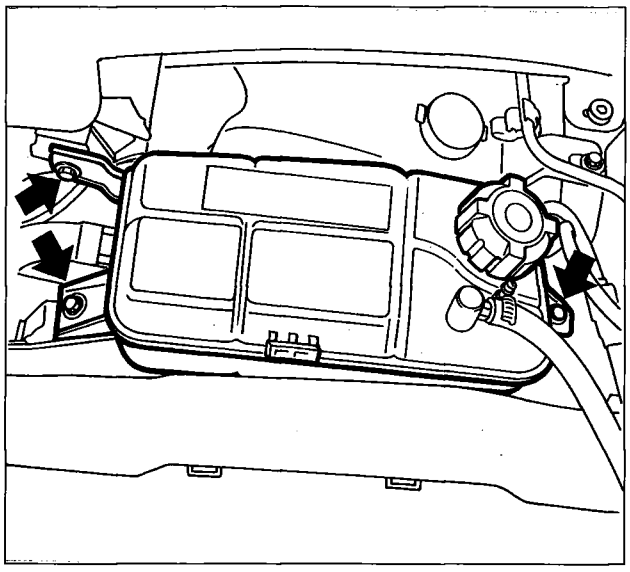

P4F048L01

REMOVING-REFITTING WINDSCREEN WASHER FLUID RESERVOIR
(All other engine versions)

- Lift the bonnet lid.
  Unscrew the bolts fastening the coolant reservoir, then move aside to gain access to the washer reservoir.

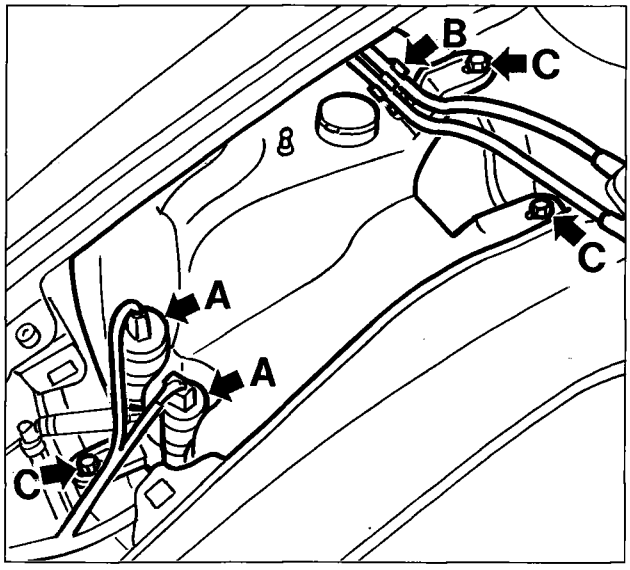

P4F050L01

- Release pumps (A) from the windscreen washer tank and remove. Recover the fluid Release the pipes from clips (B).
  Unscrew bolts (C) retaining the screen washer fluid reservoir.

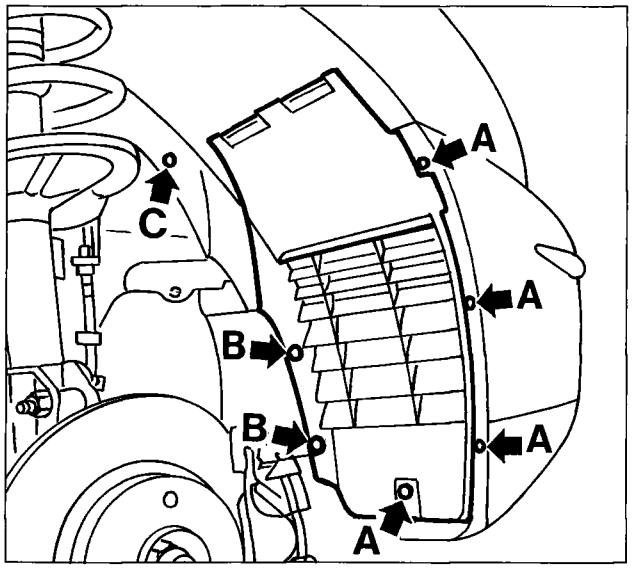

P4F050L02

- Remove the right front wheel.
  Unscrew bolts (A) and release plugs (B), then remove the washer fluid reservoir.
  Unscrew screw (C), then allow the washer fluid reservoir to drop down and remove.

NOTE *Reverse order of removal operations to refit.*

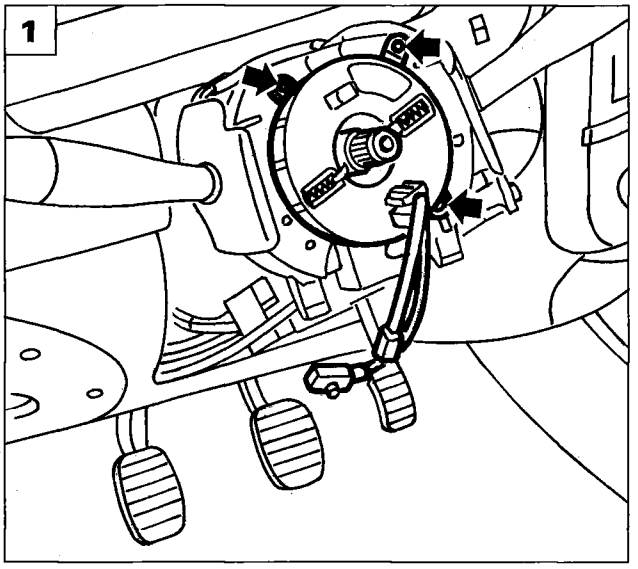

P4F051L01

STALK UNIT

Removing-refitting

- Remove the driver's side air bag as described in the relevant paragraph. Observe the SAFETY REGULATIONS indicated. In particular

It is absolutely necessary to remove and fit Air Bag modules with the ignition key turned to "STOP" and removed, and with battery positive and negative leads disconnected and properly insulated. Wait 10 minutes before carrying out the following operations.

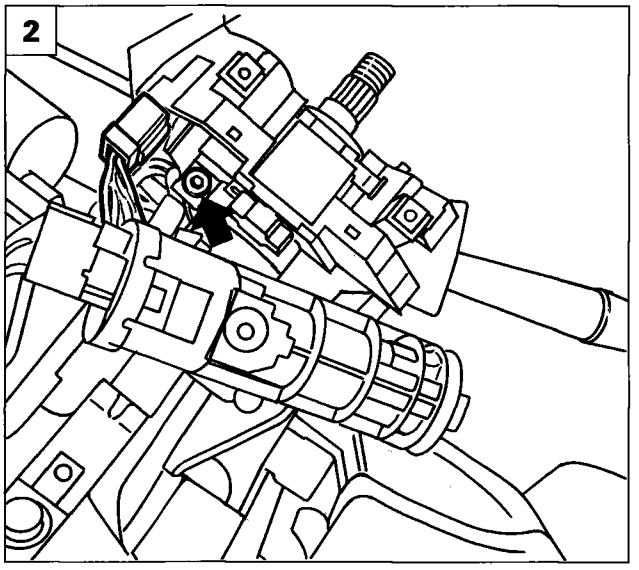

P4F051L02

1. Remove the coiled lead device as described in the paragraph "Air Bag and pretensioners".

Once the steering wheel has been removed, the coiled lead device remains locked and does not allow the two upper and lower plates to turn in relation to one another. If the coiled device is accidentally made to turn, it must be replaced.

NOTE *In versions without an Air Bag, remove the horn cover, steering wheel and both steering column covers to gain access to the stalk unit. For more details, see Group 41 - STEERING.*

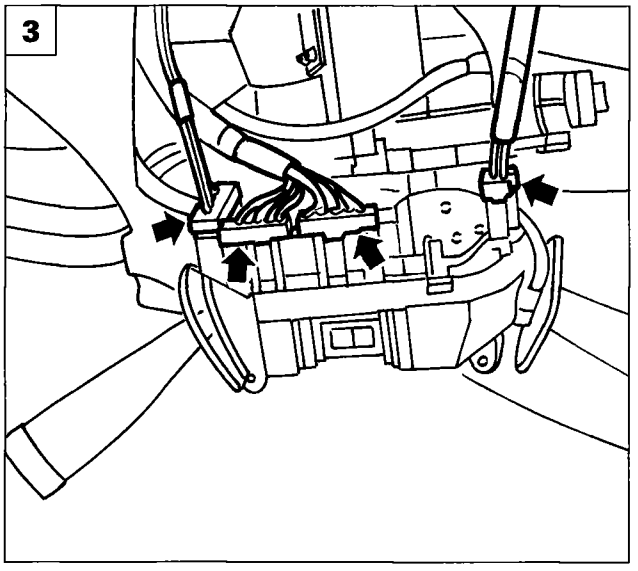

P4F051L03

2. Unscrew the screw indicated and move the stalk unit to one side.

3. Disconnect the four connections and remove the stalk unit

NOTE *Reverse order of removal operations to refit*

DO NOT CONNECT THE BATTERY UNTIL ASSEMBLY IS COMPLETE.

Stalk unit wiring diagram

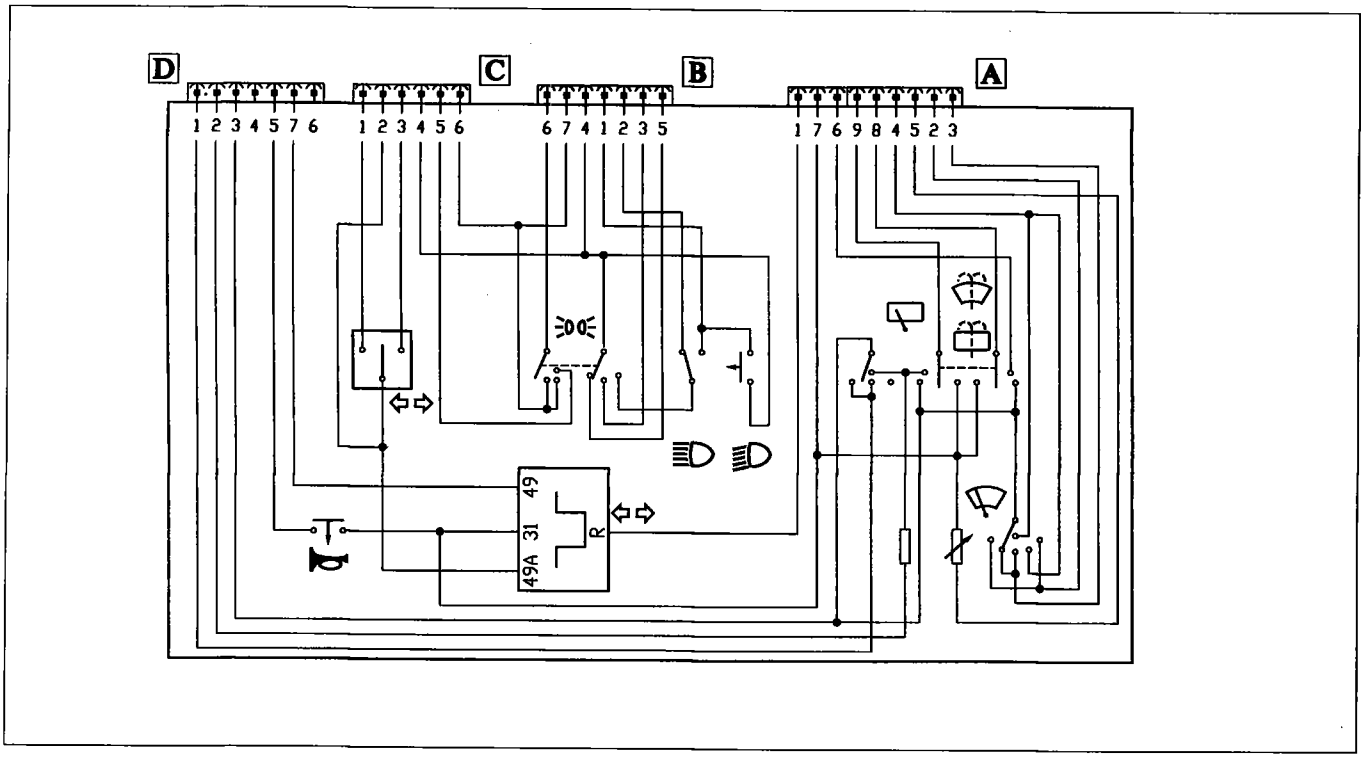

P4F052L01

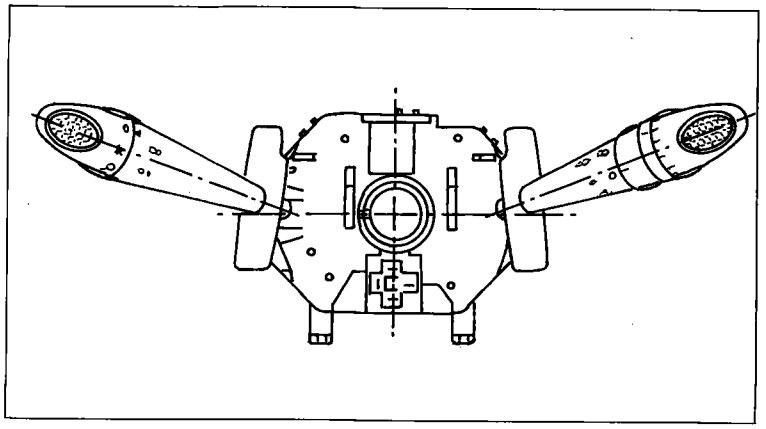

P4F052L02

Front view of stalk unit

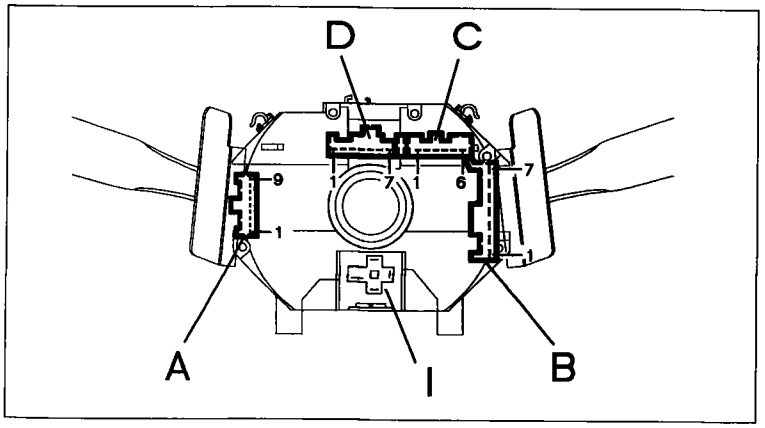

P4F052L03

Rear view of stalk unit

A, B, C, D: connection sites for connectors with the same letters, with numbering of terminals.
I: seat for turn signal/hazard warning light flasher unit.

Description of wiring and connectors

CONNECTOR A		
Term. no.	**Wiring colour**	**Circuit involved**
1	-	N.C.
2	H	Windscreen wiper - high speed
3	HN	Windscreen wiper - brake
4	HG	Windscreen wiper - low speed/intermittent
5	GV	Wiper speed variation
6	SG	Headlamp washer control
7	N	Earth
8	S	Front/rear washer pump
9	SN	Front/rear washer pump

CONNECTOR B		
Term. no.	**Wiring colour**	**Circuit involved**
1	LR	Main beams
2	HR	Dipped beams
3	-	N.C.
4	AG	Ignition power source (start-up excluded)
5	-	N.C.
6	GV	Side light power supply
7	CB	Ignition power source

CONNECTOR C		
Term. no.	**Wiring colour**	**Circuit involved**
1	AN	Right-hand turn signal
2	LP	Hazard warning lights
3	A	Left-hand turn signal
4	AG	Ignition power source (start-up excluded)
5	HL	Rear fog lamp enablement
6	CB	Ignition power source

CONNECTOR D		
Term. no.	**Wiring colour**	**Circuit involved**
1	CB	Rear wiper - brake (*)
2	CL	Rear wiper (*)
3	C	Power supply to rear wiper and front/rear washer
4	-	N.C.
5	LN	Horns
6	-	N.C.
7	LB	Power supply to turn signal intermittent function

(*) Only Marea Weekend

The right-hand stalk controls: the windscreen wiper, the rear wiper and the front/rear wiper pump as follows:

Windscreen wiper

- When the right-hand stalk is moved down by one click, the windscreen intermittent functon is activated. The first lever ring is turned to select the four possible intermittent windscreen wiper speeds.
- When the stalk is moved down by two clicks, the continuous 35 wipes per minute function is selected.
- When the stalk is moved down by three clicks, the continuous 45 wipes per minute is selected.
  If the lever is pushed up from rest and held in this position, continuous wiper function is selected, but with the lever not in a fixed position. The windscreen wiper operates as long as the stalk is held in this position but stops as soon as it is released.

Copyright Fiat Auto

55.

Windscreen wiper motor

A container on the motor case contains a switching circuit. This consists of a relay and a switch for automatic return to the blade rest position.

Windscreen washer

The windscreen washer pump is activated when the right hand stalk is moved toward the driver.
When the lever is released, the pump stops but the wiper stays on for about four seconds to finish wiping the windscreen.

Front/rear washer pump

The washer pump is fitted directly to the fluid reservoir.
The pump is two-directional and equipped with two fittings. These carry fluid to the windscreen spray nozzles and the rear nozzle respectively (if present).
Fluid is delivered to one of the two pipes according to the pump direction of rotatation. This is determined by the position to which the stalk is moved. In other words, when the stalk is moved forward the lever activates the pump by sending positive signal to a SN and a negative signal to S. The opposite happens when the lever is pulled back.

Rear wiper (only Marea Weekend)

The right hand stalk unit also controls the rear wiper and pump via a supplementary rear wiper control ring.

Rear window wiper motor

The rear wiper motor is equipped with a relay and a switch. These constitute the wiper control/reset circuit.

A. When the ring on the stalk is turned, one terminal of the control relay is connected directly to earth via a cable which activates the motor continuously.
B. When the lever is pushed toward the facia, both pump and rear wiper are turned on simultaneously.

Rear wiper (only Marea Weekend)

When the lever is pushed forward, the rear washer is activated and the rear wiper is activated simultaneously until the lever is released.

Headlamp washer

The headlamp washing system consists of a timer and a pump located on the washer fluid reservoir next to the washer pump, to which are connected (via pipes) two nozzles fastened to the front bumper.
When the dipped beams are on, both windscreen and headlamp washer functions are activated when the right-hand lever is moved toward the driver.
The timer is supplied by a 12V positive leading directly from the battery and protected by a fuse. This is connectedto the left front earth.
With dipped or main beams activated, the timer is activated by turning the stalk ring and this enables system operation for about half a second.

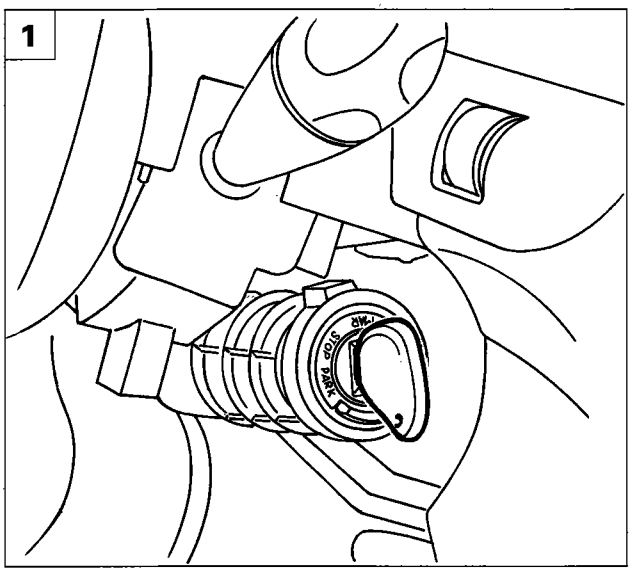

P4F055L01

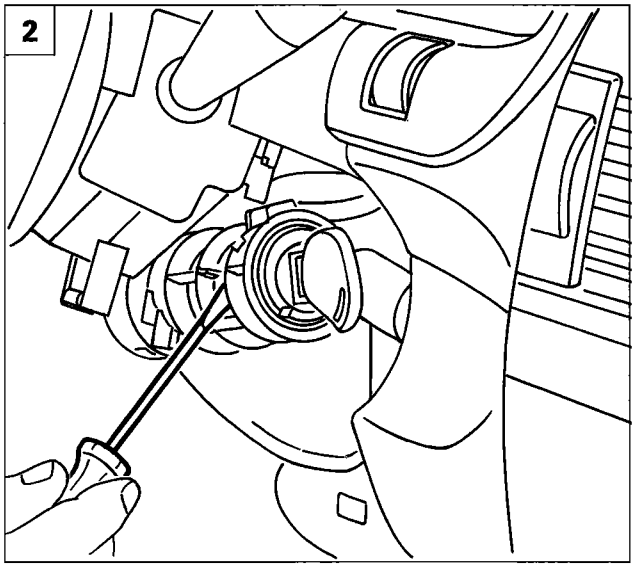

P4F055L02

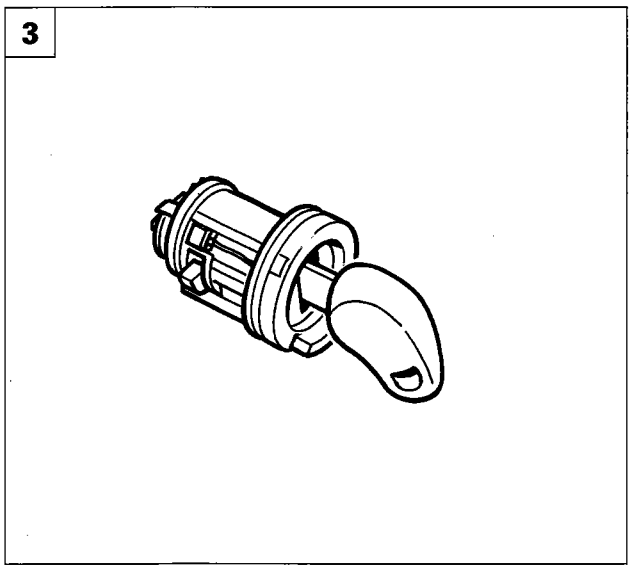

P4F055L03

IGNITION SWITCH

Removing-refitting key barrel

1. Disconnect the negative battery terminal and remove the upper and lower steering column guards (see Group 70). Insert the key into the ignition switch and turn to MAR.
2. Press on the detent tooth as shown in the figure.
3. Withdraw the ignition block.
4. Remove the retaining ring fitted in the rear part of the ignition block.
5. Press the lever to activate the parking lights and turn the key to allow stop A to position itself as shown in the figure.

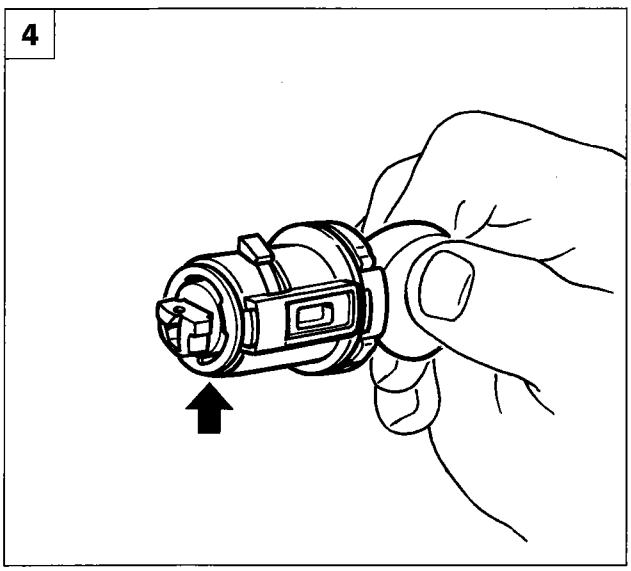

P4F055L04

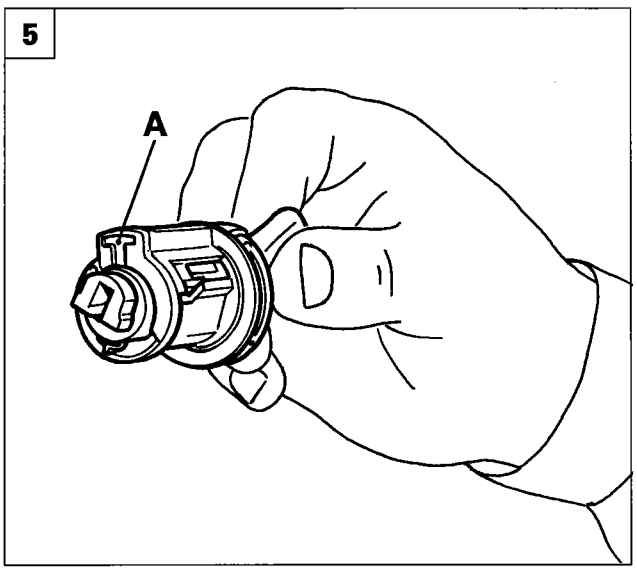

P4F055L05

55.

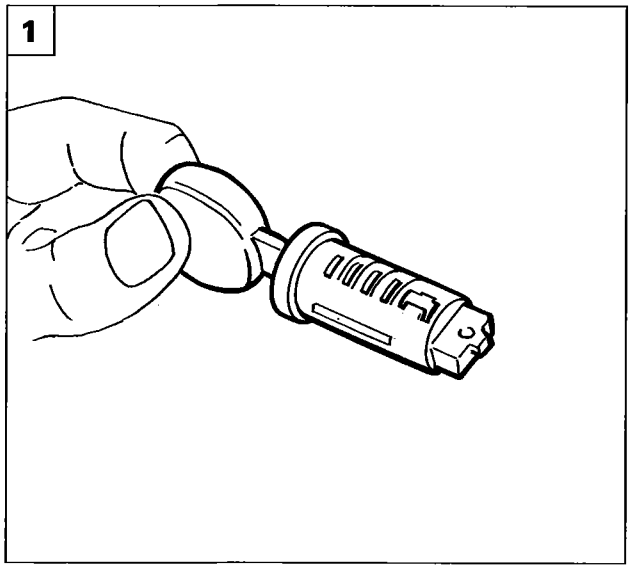

P4F056L01

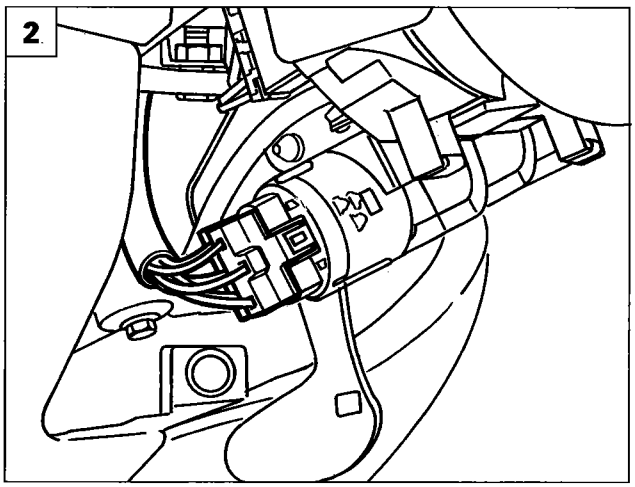

P4F056L02

1. Remove the ignition block.

Removing-refitting ignition switch

2. Disconnect the battery negative terminal and remove the lower steering column guard. Disconnect electrical connections of ignition switch.
3. Unscrew retaining bolts (with pre-sets break point) indicated.

These bolts must be replaced with new ones when refitting.

4. Remove switch from vehicle.

Removing-refitting ignition switch contact carrier block

5. Proceed as described under point 2. Then release the block from the vehicle as shown in the figure.

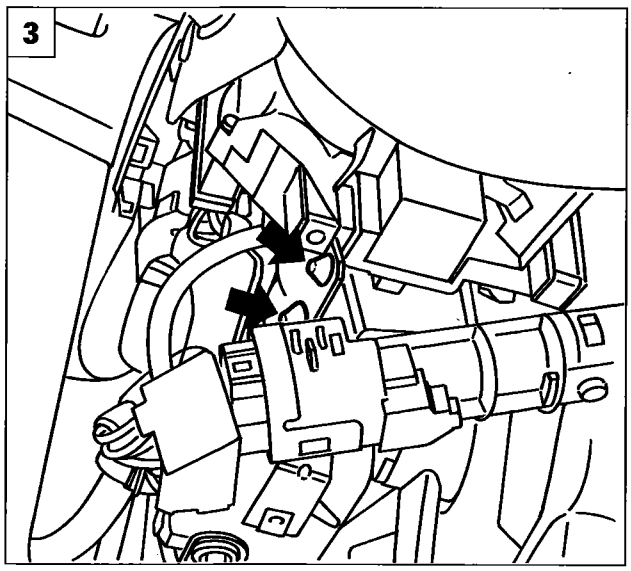

P4F056L03

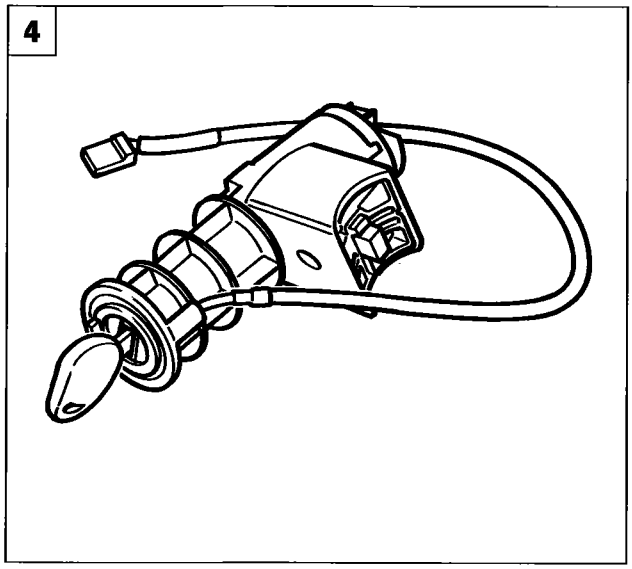

P4F056L04

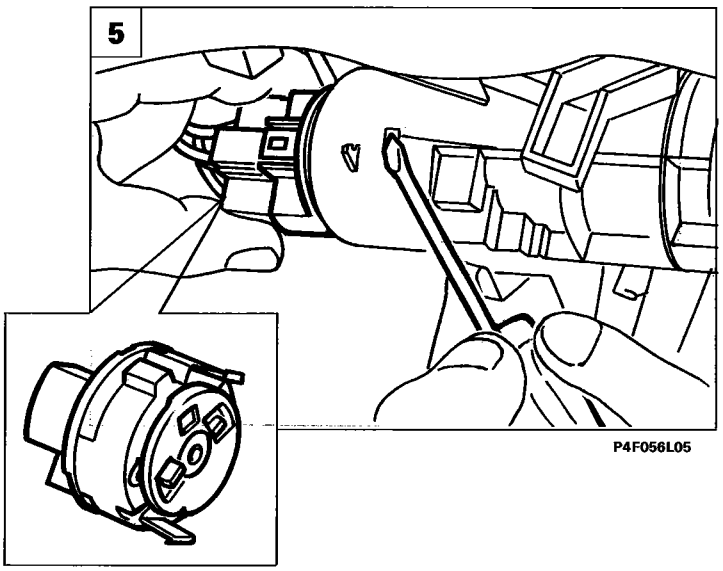

P4F056L05

P4F056L06

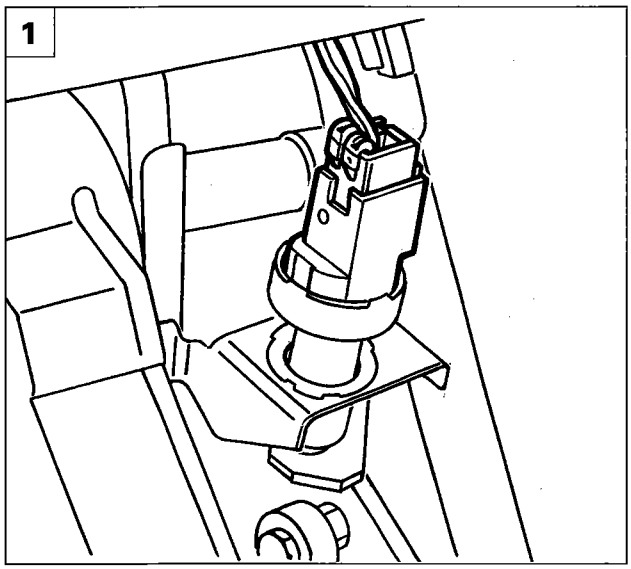

P4F057L01

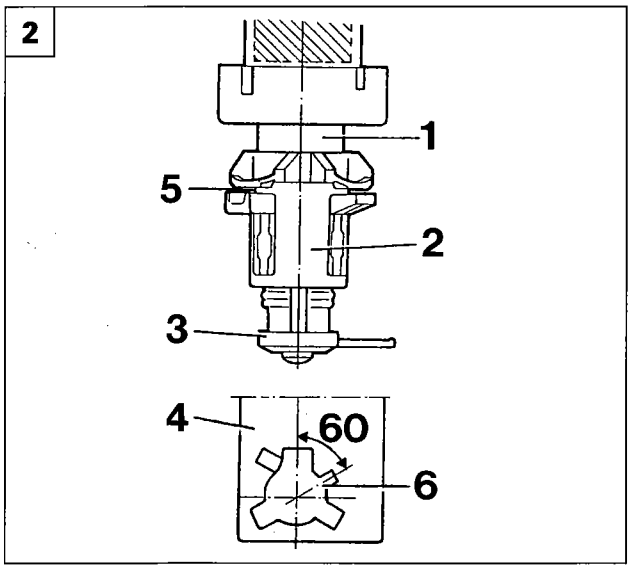

P4F057L02

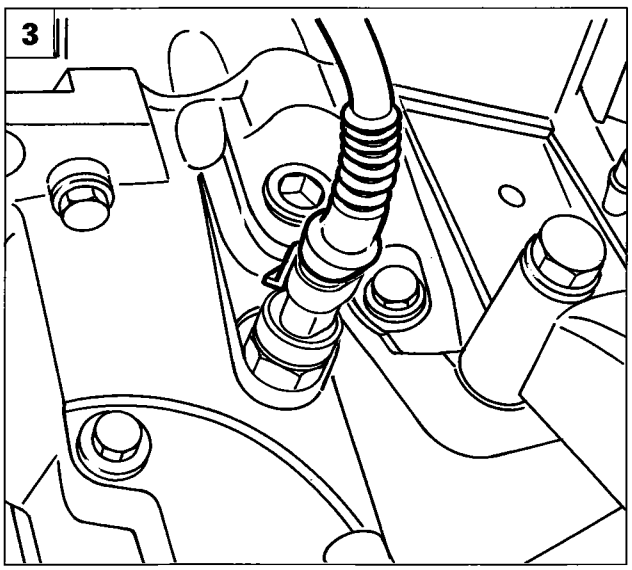

P4F057L03

BRAKE LIGHT SWITCH

Proceed as follows to replace the brake light switch:

Removing

1. Disconnect electrical connection.
2. Turn the switch anticlockwise through about 60°, then remove.

The latter operation is facilitated if a wrench is used on the hexagonal section (1) in the figure.

Refitting

Fit a new switch complete with bush (2) and spacer (3), into seat (4) as described below;

- keep the brake pedal pressed down, thenn fit a new switch into the correct position on the bracket (4);
- turn the switch through 60° clockwise until the end of its travel, A click should be heard as the detent tooth (5) engages in seat (6).

Adjustment

- Release the brake pedal to its rest position. Pull up further until the switch takes up position automatically in relation to bush (2);
- press the pedal in order to remove service spacer (3) used as protection during adjustment.

NOTE *The service spacer (3) releases an internal detent tooth which prevents any further movement between switch and bush (2).*

REMOVING-REFITTING REVERSING LIGHTS SWITCH

3. To replace the switch, disconnect connector indicated and unscrew the switch from the gearbox taking care to prevent oil emerging.

NOTE *Reverse order of removal operations to refit.*

Copyright Fiat Auto

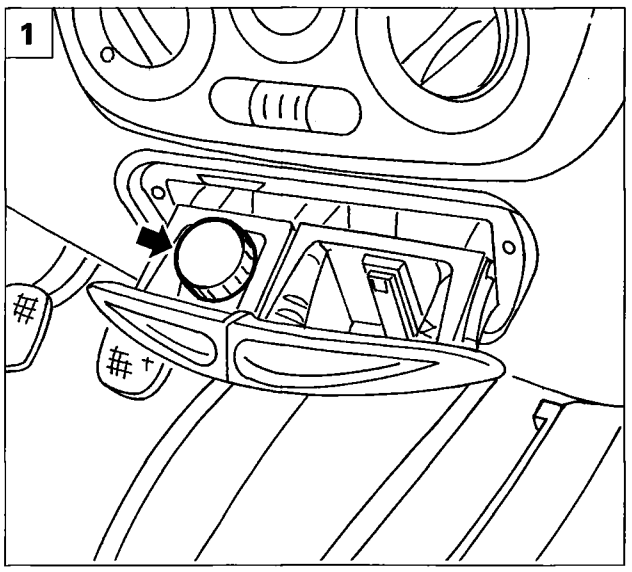

P4F058L01

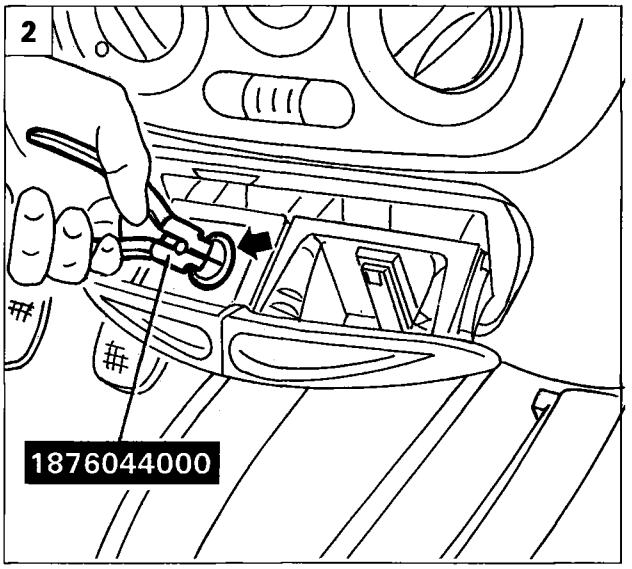

P4F058L02

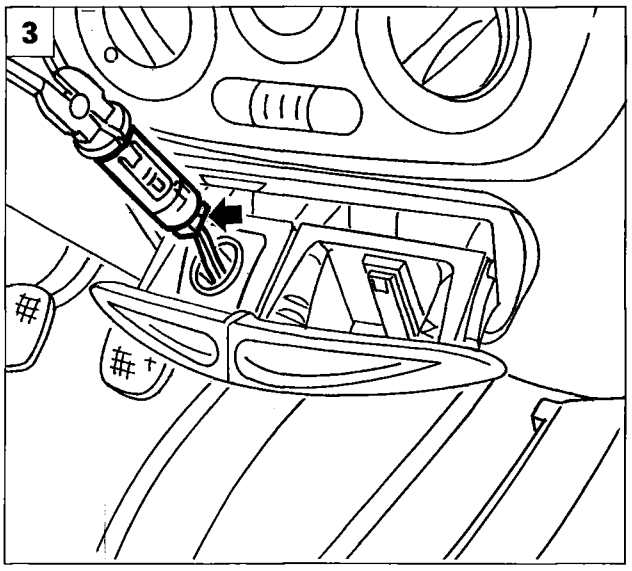

P4F058L03

REMOVING-REFITTING CIGAR LIGHTER

1. Open access hatch to the cigar lighter and remove the cigar lighter.
2. Fit tool 1876044000 into the base of the cigar lighter and pull out a little way without turning.
3. Disconnect connector to release the cigar lighter base and remove.

NOTE *Reverse order of removal operations to refit.*

REMOVING-REFITTING HORNS

- Remove the right front light cluster as described previously.

4. Work from the space left by the light cluster to disconnect connectors (A) of the low tone horn and (B) of the high tone horn.
   Unscrew screw (C) and remove the low tone horn; unscrew screw (D) and remove the high tone horn.

NOTE *Reverse order of removal operations to refit.*

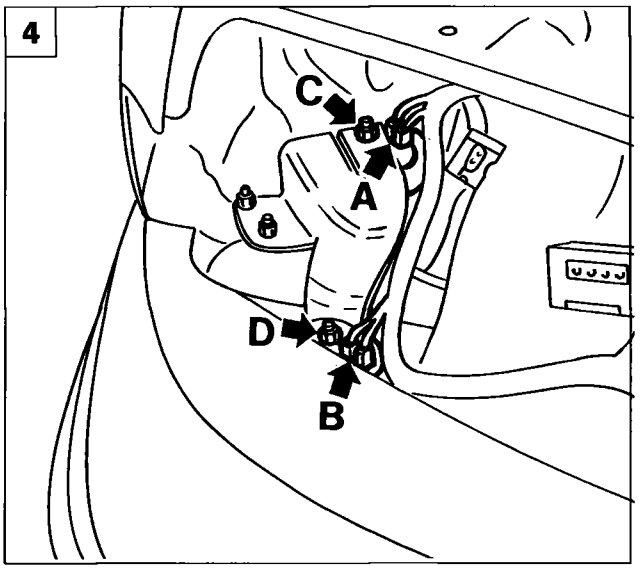

P4F058L04

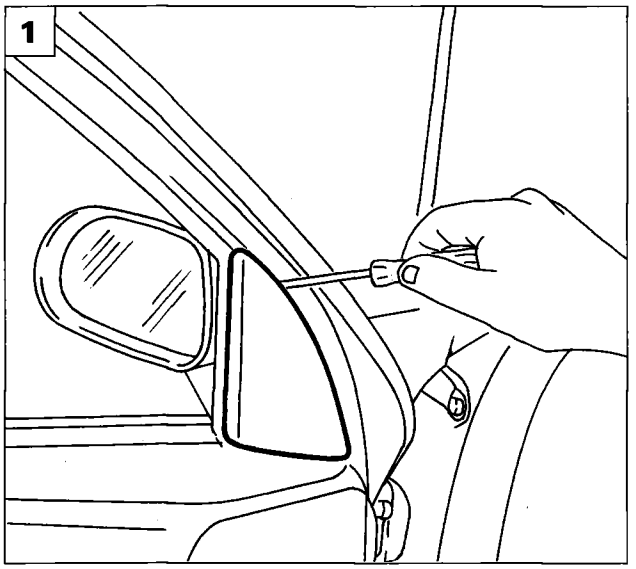

P4F059L01

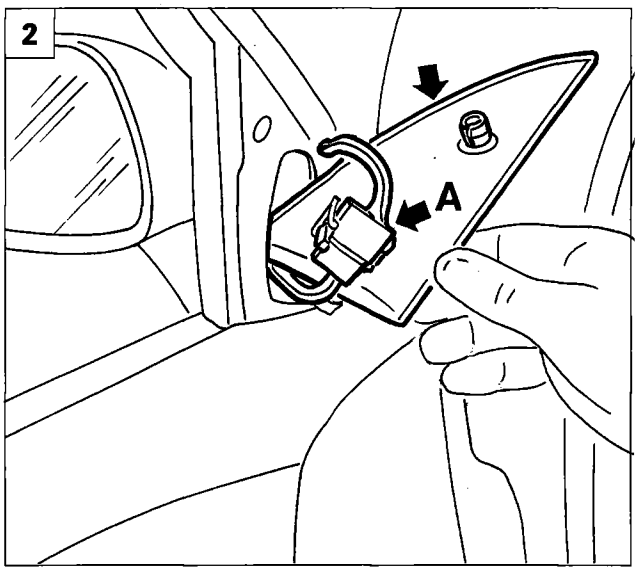

P4F059L02

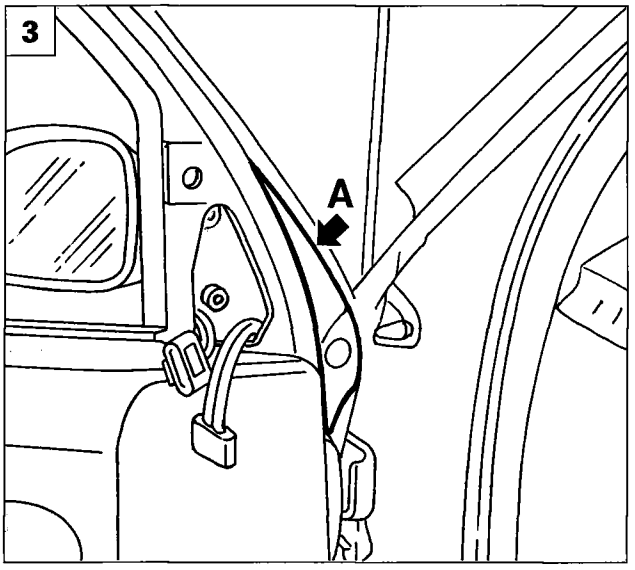

P4F059L03

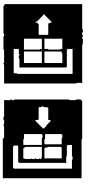

REMOVING-REFITTING DOOR MIRROR

1. Gently detach the mirror fastening moulding by undoing the retaining tabs.
2. Disconnect electrical connection (A) then remove the moulding.
3. **R**elease the rubber protection (A).
4. Unscrew the bolts fastening the mirror to the body.
5. Remove the door mirror together with plastic moulding.

NOTE *Carry out removal operations in reverse order to refit.*

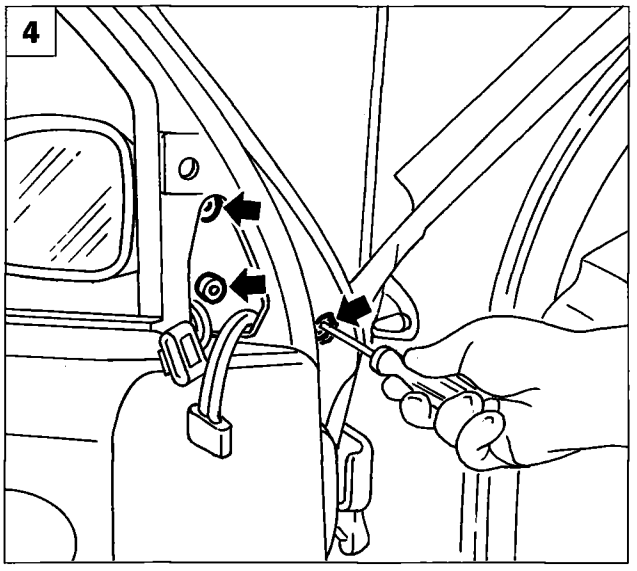

P4F059L04

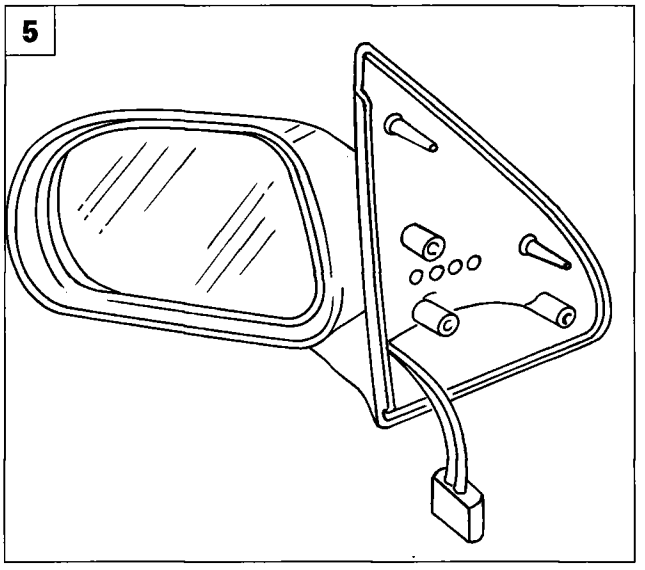

P4F059L05

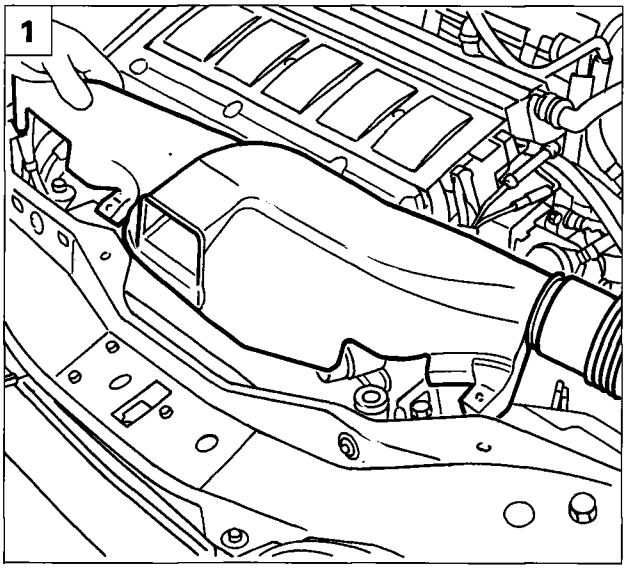

P4F060L01

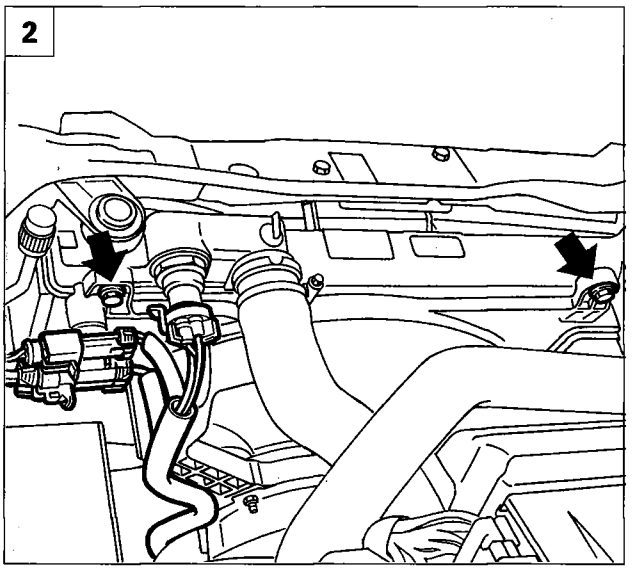

P4F060L02

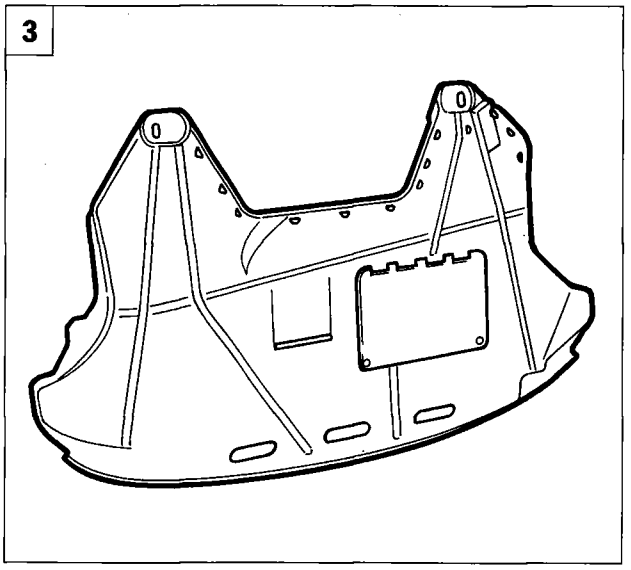

P4F060L03

REMOVING-REFITTING RADIATOR FAN

The instructions given here are intended as a guide and may not apply if the version or specification is not as shown in this case.

1. Place the vehicle on a lift, disconnect the negative lead from battery, then remove the air shroud.
2. Unscrew the upper fan retaining bolts and the connections shown.
3. Raise the vehicle and remove the lower sound-proofed guard from the vehicle.
4. Unscrew the lower fan retaining bolts.
5. Disconnect the fan from the vehicle.

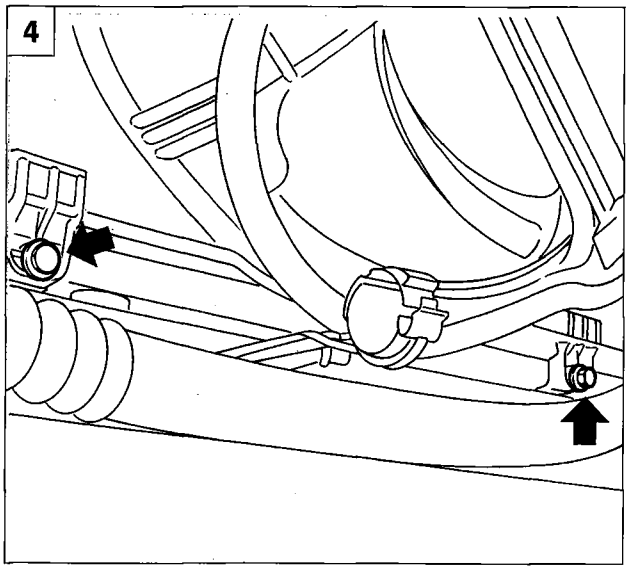

P4F060L04

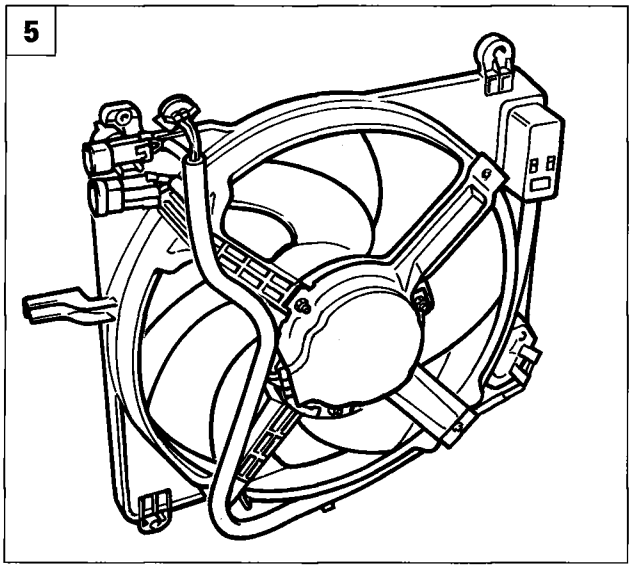

P4F060L05

AD 185 M RADIO-CASSETTE PLAYER

The vehicle is fitted as standard with a radio system, which consists of the following main components:

- AD 185 M radio-cassette player (non-removable) located in the central part of the instrument facia. The FIAT front panel blends in with the facia styling;
- two speakers located on the inner front door panels;
- stylus-type aerial located on the front central part of the roof.

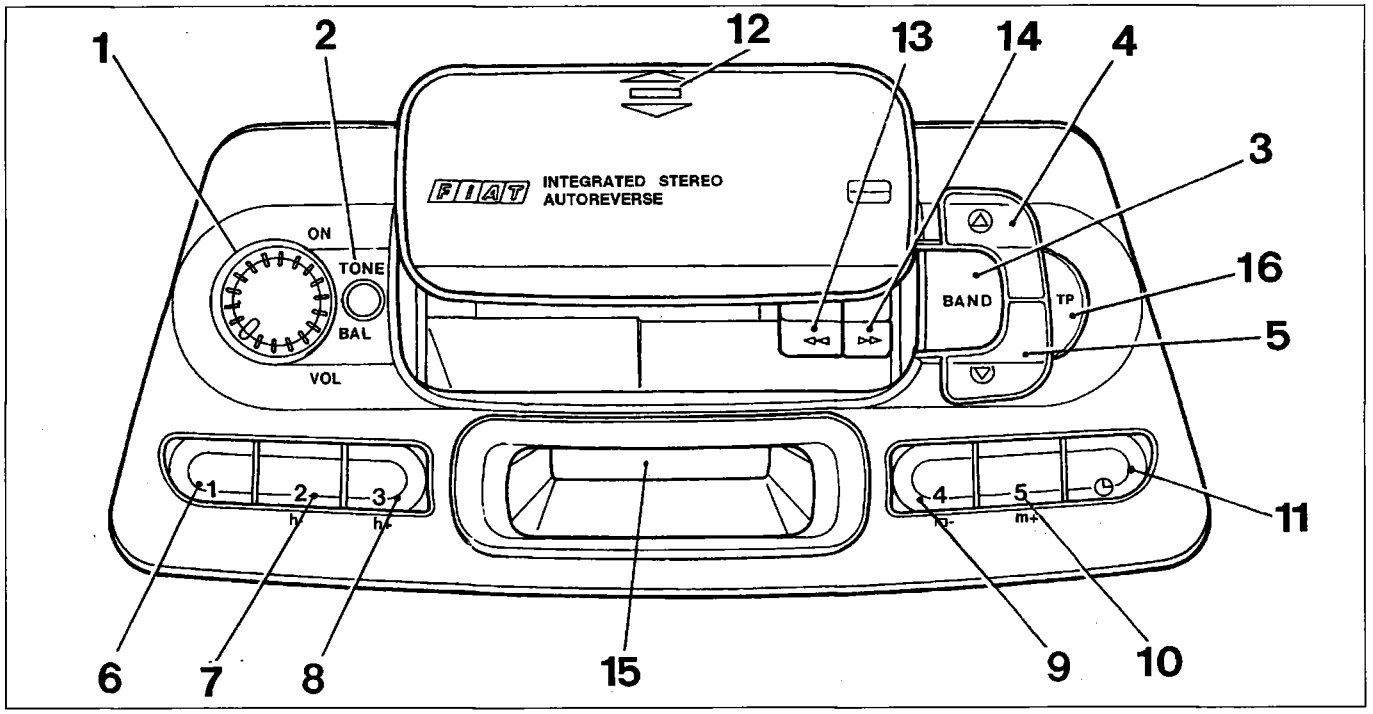

P4F17AL01

1. radio on knob (press to operate) and volume control (turn to control;
2. Cylindrical key to adjust tone (press and turn) and sound balance between the two speakers (pull out and turn);
3. Wavelength selector key (FM1 - FM2 - MW - LW);
4. Automatic or manual tuning key (short or long presses) in increasing order of station frequency.
5. Automatic or manual search key (short or long presses) in order of decreasing station frequency.
6. Station no. 1 preselection key - priority selection of time/radio frequency indication on display
7. Station no. 2 preselection key - adjust hours in decreasing order
8. Station no. 3 preselection key - adjust hours in increasing order
9. Station no. 4 preselection key - adjust minutes in increasing order.
10. Station no. 5 preselection key - adjust minutes in decreasing order.
11. Radio frequency/time display switching key (press only once) and time adjustment selection (extended press);
12. Point at which to press cassette slot cover to raise;
13. Key to fast rewind cassette tape and eject (press together with key 14);
14. Key to fast forward cassette tape and eject (press together with key 13)
15. Wavelength / station frequency / stereo broadcast /searCh sensitivity / time display.
16. Traffic Program mode selection key

Copyright Fiat Auto

55.

Rear view of radio

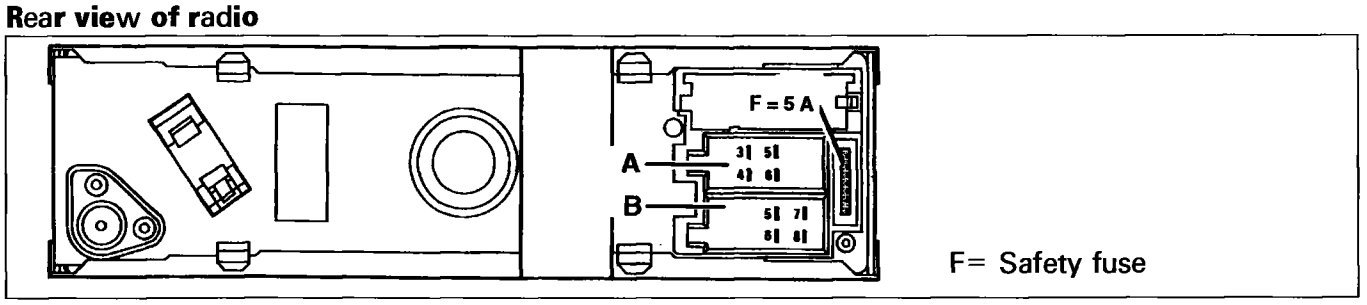

P4F18AL01

SEAT FOR CONNECTOR A	
N°	Connection
4	Ignition power source (+15)
6	Lighting
7	Power supply (+30)
8	Earth

SEAT FOR CONNECTOR B	
N°	Connection
3	Right speaker
4	Right speaker
5	Left speaker
6	Left speaker

NOTE *Pins not mentioned in the tables are not conneted.*

Wiring diagram

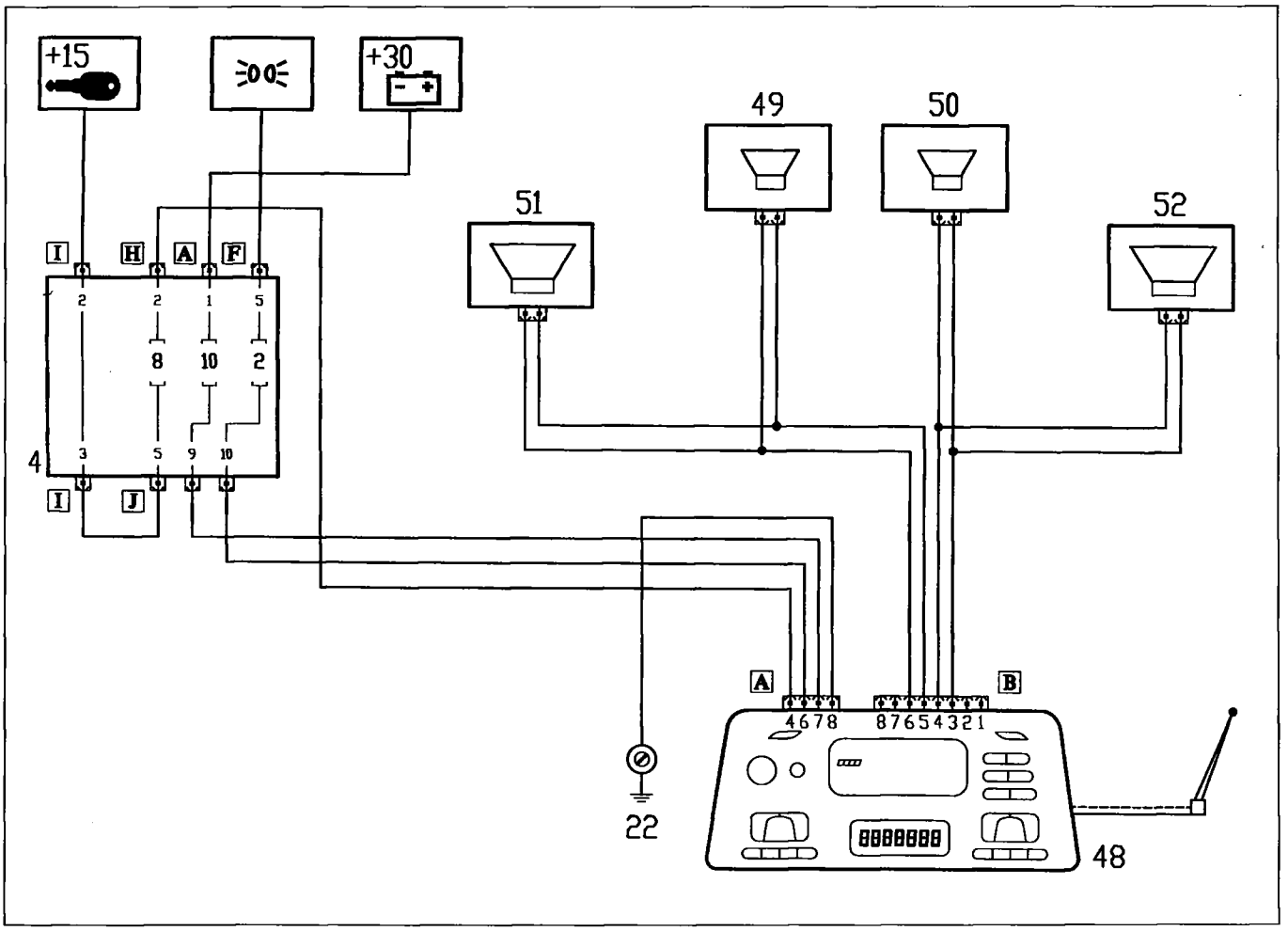

P4F18AL02

4. Junction unit
22. Left hand facia earth
48. Radio with clock
49. Left front loudspeaker (tweeter)
50. Right front speaker (tweeter)
51. Speaker on left hand front door
52. Speaker on right hand front door

OPERATION OF AD 185 M MODEL RADIO

TURNING ON RADIO

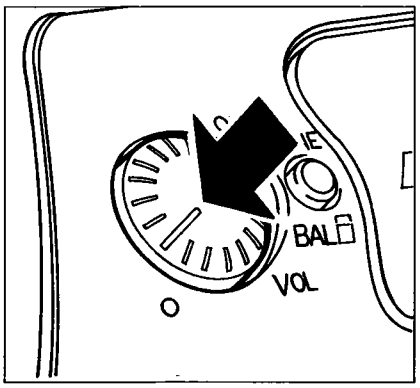

P4F063L01

Press the key

VOLUME ADJUSTMENT

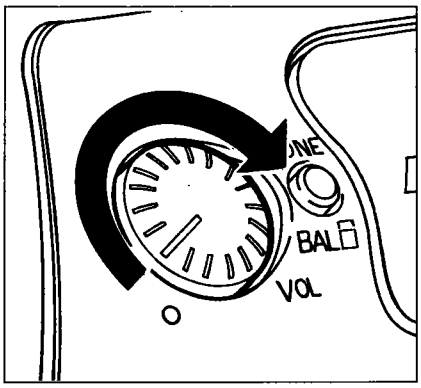

P4F063L02

Raise volume

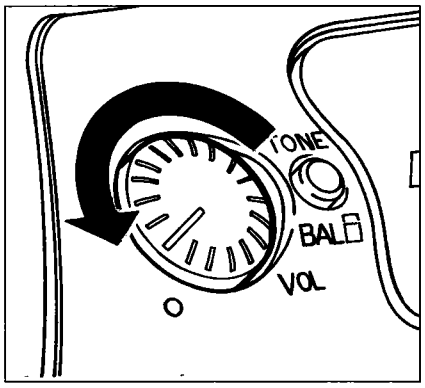

P4F063L03

Lower volume

TONE ADJUSTMENT

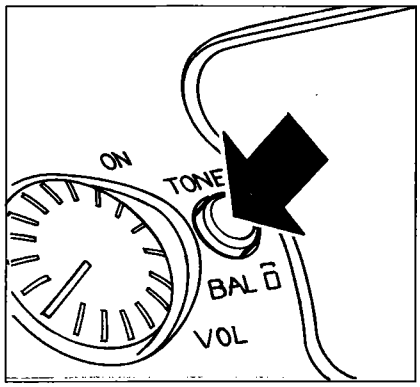

P4F063L04

Press the key

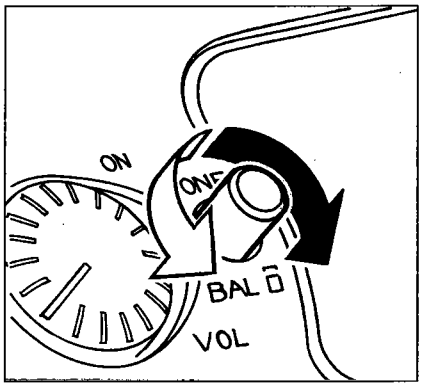

P4F063L05

(●) More treble tones

(○) More bass tones

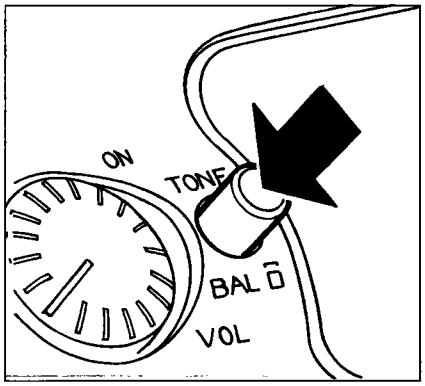

P4F063L06

Press the key again after adjustment

BALANCE ADJUSTMENT

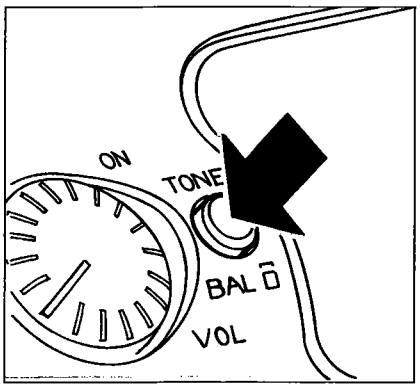

P4F063L07

Press the key

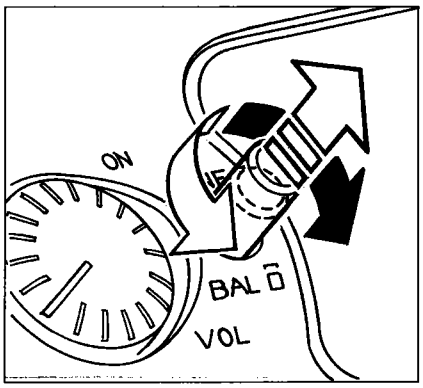

P4F063L08

Pull key out until it clicks

(●) More sound from right speaker

(○) More sound from left speaker

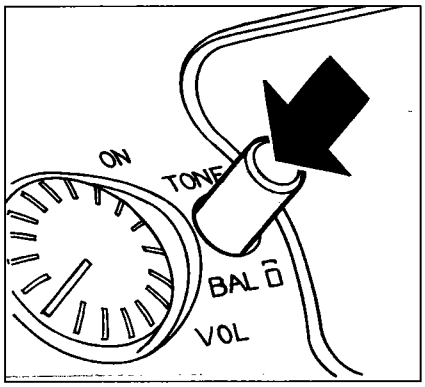

P4F063L09

Press the key again after adjustment

FREQUENCY RANGE SELECTION

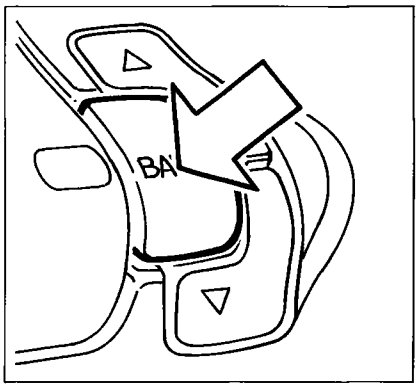

P4F064L01

Press the key several times until the display shows the required frequency range code.

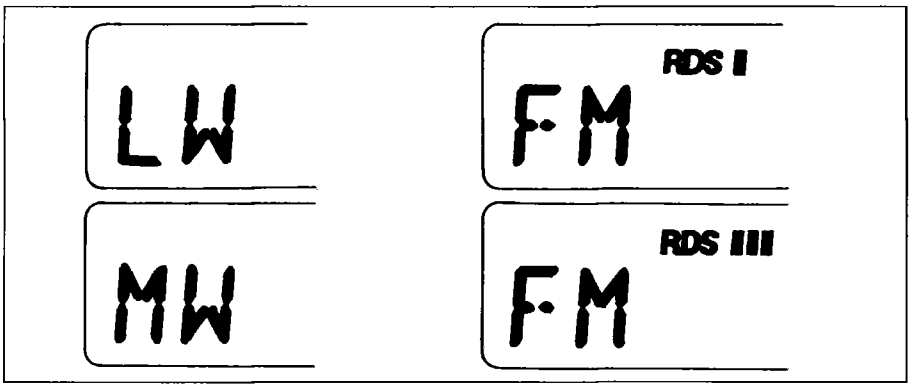

P4F064L02

LW=Long wave
MW=Medium wave
FM= frequency modulation
FM-RDS= Split into three sub-bands identified as **RDS** I, **RDS** II, **RDS** III for stations broadcasting in **RDS**.

NOTE RDS FUNCTION (Radio Data System)
Systems designed to work with RDS allow automatic tuning to the best frequency for the selected station. It is therefore possible to carry on listening to a particular station without needing to retune for a different area. Of course, it must be possible to receive the required station in the relevant area.
The name of the station broadcasting in RDS appears on the display.

STORAGE OF LAST STATION

Occurs automatically for each frequency range tuned when the radio is turned on or when the frequency range changes.

AUTOMATIC TUNING SEARCH

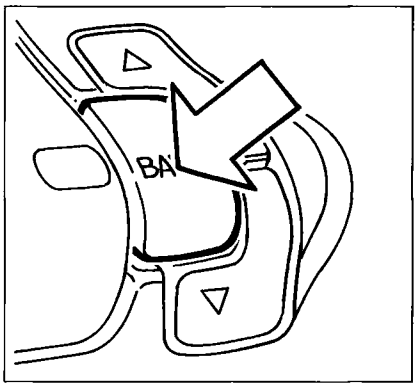

Press the key several times to select the required frequency range.

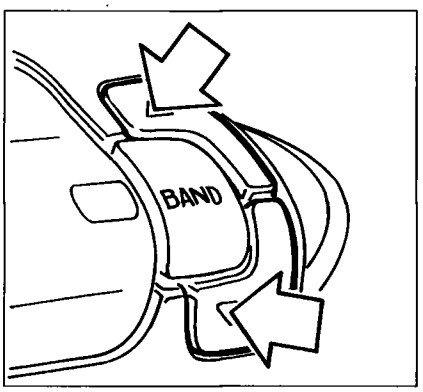

P4F064L03

Press one of the two tuning keys.

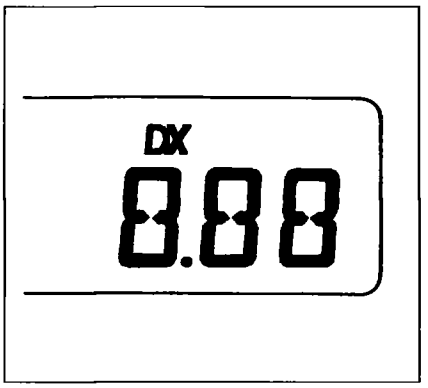

P4F064L04

The search sensitivity increases during the 2nd and 3rd exploration of the entire frequency range. The code DX appears on the display during the third exploration.
To select maximum search sensitivity immediately, hold one of the above two keys down until the code DX appears on the display.

Do not hold the key down too long because the manual tuning search would be selected in the LW, MW or FM ranges.

TUNING - MANUAL SEARCH

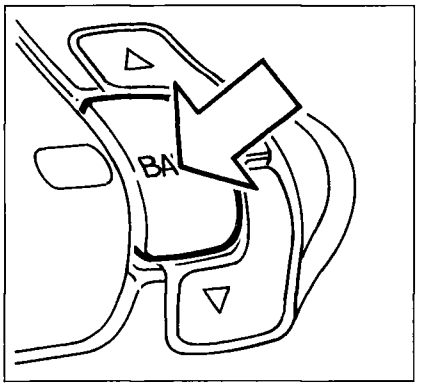

P4F064L01

Press the key several times to select the required frequency range

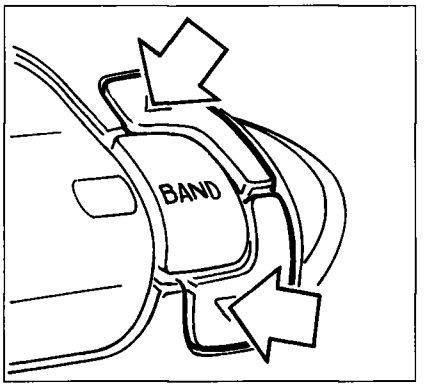

P4F064L03

Hold one of the keys down until the flashing word "MAN" appears on the display

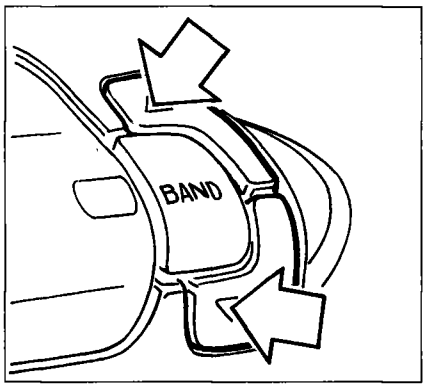

Press one of the two keys (**) again to select the required station

(**) Give short presses to change frequency gradually in steps. Hold the key down for longer to change frequency quickly.

NOTE *The manual search function is NOT active for FM-RDS bands.*

After 60 seconds, if one of the keys shown below and identified by numbers 1 to 6 is pressed, automatic tuning mode is selected and the flashing word "MAN" disappears from the display.

If one of the five keys is pressed, the radio tunes to the station stored for the relevant key.

NOTE *When the frequency range is selected, the search changes from manual to automatic.*

MANUAL STORAGE OF A STATION

The current station can be saved within the selected frequency range by means of one of the five numbered keys (lower figure). Press the key until the station can be heard again and the key number appears on the display.
The station is still stored even when the power supply to the radio is cut off.

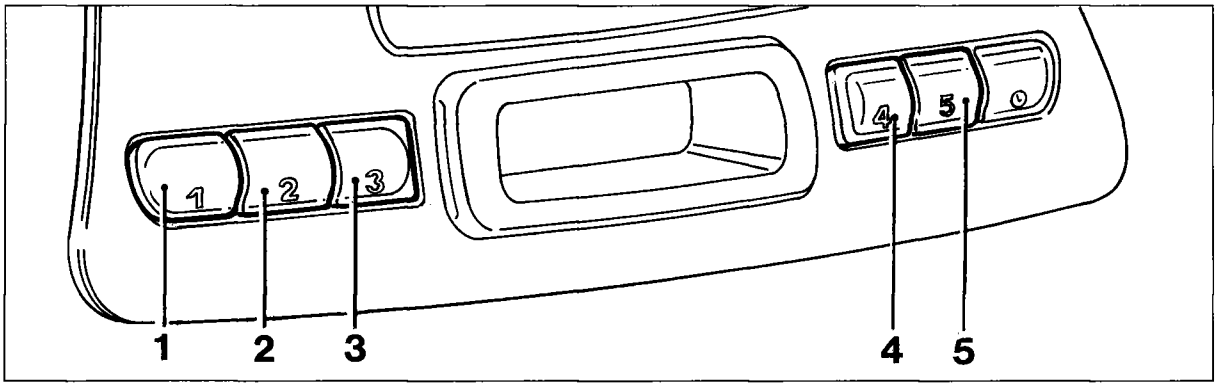

P4F065L01

LISTENING TO A STORED STATION

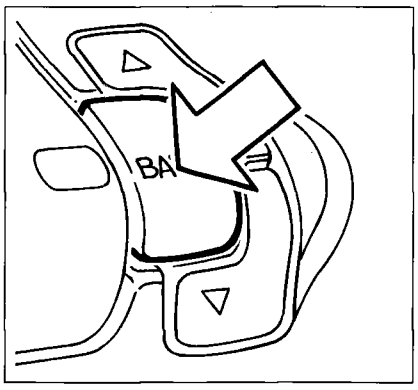

P4F064L01

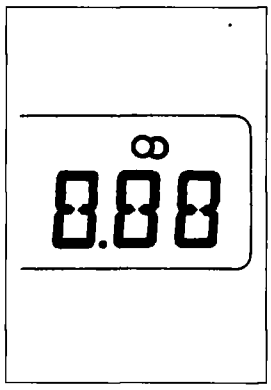

P4F066L01

After selecting the required frequency range by pressing the BAND key several times, press one of the five station storage keys (see figure at bottom of previous page) and the number of the key will appear on the display.
When the tuned station broadcasts stereo programmes, the symbol 00 appears on the display (see figure), but if the incoming signal is weak, the broadcast is automatically switched fromo Stereo to Mono.

AUTOMATIC STORAGE OF 5 STATIONS IN THE FM-RDS BAND (AUTOSTORE)

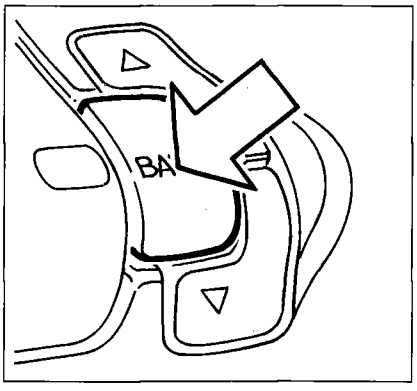

In this way, up to five stations can be saved for each of the three FMRDSI, FMRDSII and FMRDSIII bands.
Proceed as follows:
- Press BAND key to select the required band.
- Hold the BAND key down until the sound goes off and the wording "AST" appears on the display.

Keys numbered 1 to 5 (see lower figure on previous page) automatically store stations with a strong signal at the time the band is selected.
Up to two explorations are carried out throughout the entire frequency range with increasing search sensitivity. This operation is completed when the sound is reactivated and the wording AST disappears. The radio is tuned to the station stored on key 1.

TP function (Traffic Program)

Some stations belonging to RDSI, RDSII and RDSIII bands broadcast information on traffic information.
using the TP (Traffic Program) function it is possible to:
a) search for only RDS stations broadcasting traffic information;
b) receive traffic information even when playing a cassette;
c) receive traffic information at a minimum pre-set volume even when the radio volume is set to zero.

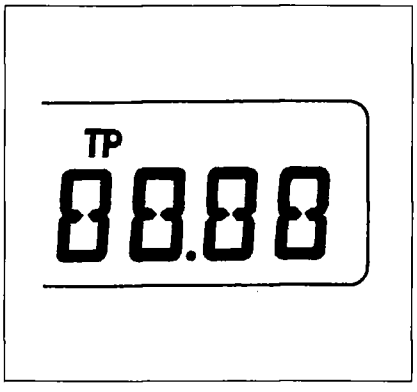

P4F066L02

NOTE *Instructions for each of the operations described under points a), b) and c) previously are given below.*

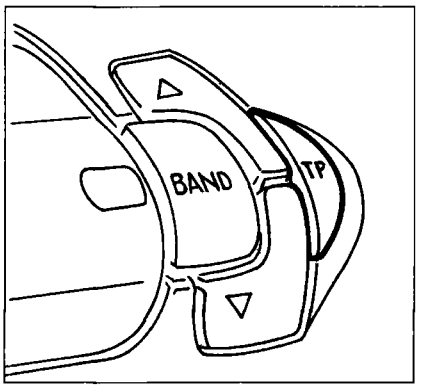

P4F067L01

Point a)

- Select a RDSI, RDSII or RDSIII band as described previously;
- press the "TP" key to display the code "TP".

If the first station is not able to provide traffic information, the radio will automatically tune to the closest station with traffic information.

Press tuning keys (A) to search for other stations providing the service.
To store stations with the "TP" function active, carry out storage procedure (see paragraph on "Storing a station").
As an alternative to manual storage, the station will be stored automatically if the "BAND" key is held down until the sound goes off (see paragraph "Automatic storage within FM-RDS band - Autostore")

Point b)

If traffic information is required, tune into an RDS TP station before inserting a cassette. If the station broadcasts traffice information while the cassette is being played, the tape is temporarily cut out and playing resumes automatically when the traffic news is over

Point c)

Even when not listening to the radio, it is possible to receive traffic information. After tuning to an RDS TP station and turning the volume to zero, any traffic news broadcast will be played at a minimum preset level.

Stations in some countries do not broadcast traffic information even though the TP function is active.

EON function (Enhanced Other Network)

In some countries, active circuits group together stations able to broadcast traffic information.
In these cases, the RDS TP programme is temporarily interrupted to receive traffic information whenever this is transmitted by one of the stations in the same circuit.
Give the "TP" key a short press to cut out the EON function.

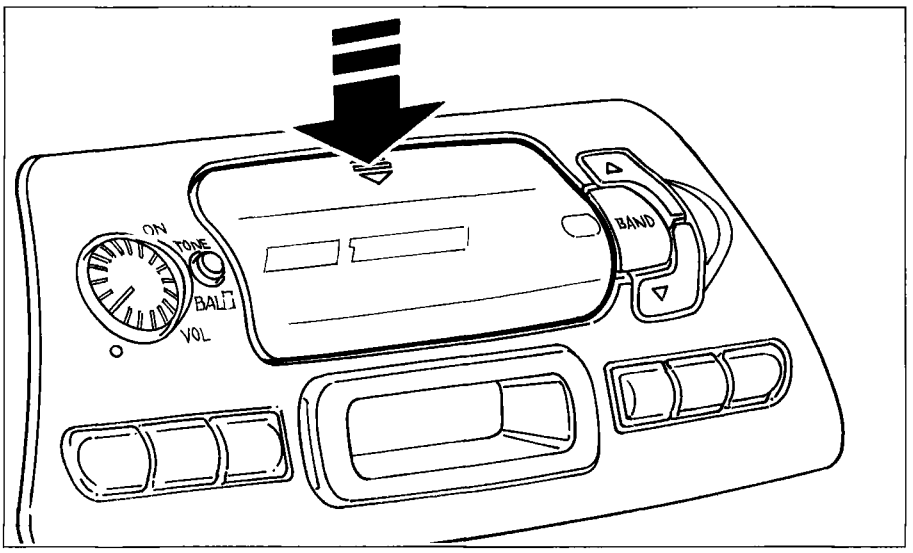

P4F067L02

CASSETTE PLAYER

Playing an audio cassette

Press down on the two arrows at the top of the cassette slot flap until the release spring clicks open.

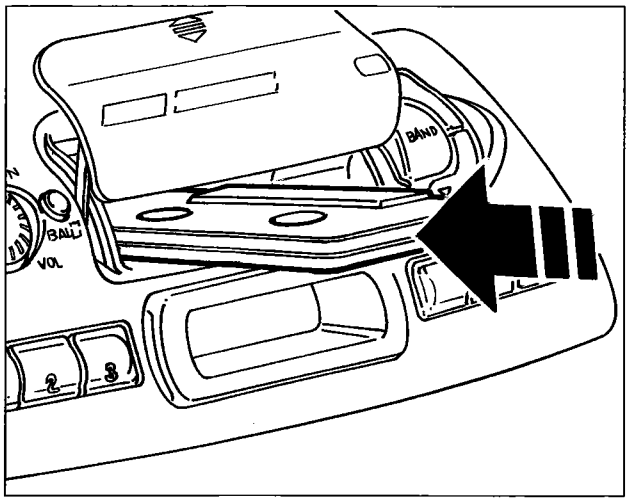

P4F068L01

Push the cassette in the slot until it clicks into place. If the radio is on, the tape begins to play automatically and the word "TAPE" appears on the display.

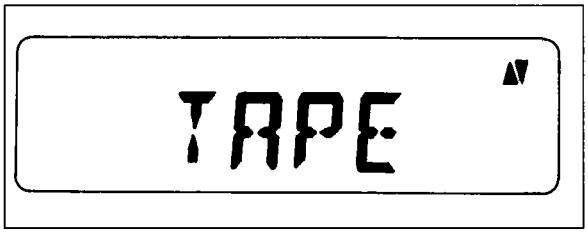

P4F068L02

If the radio is turned off while the tape is playing and then turned back on, the tape automatically begins to play from the point where it left off.

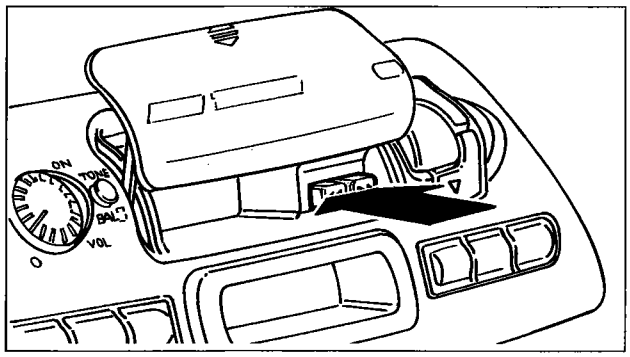

P4F068L03

To select the radio function, press both keys shown in the figure at the same time to eject the cassette. The word "TAPE" disappears from the display and the radio comes on.

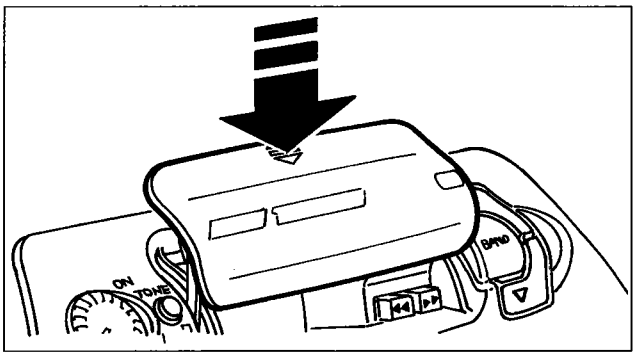

P4F068L04

To close the cassette slot, press down on the arrows at the top of the flap until the catch clicks shut.

The cassette may be ejected even if the radio is off.

FAST FORWARDING THE CASSETTE TAPE

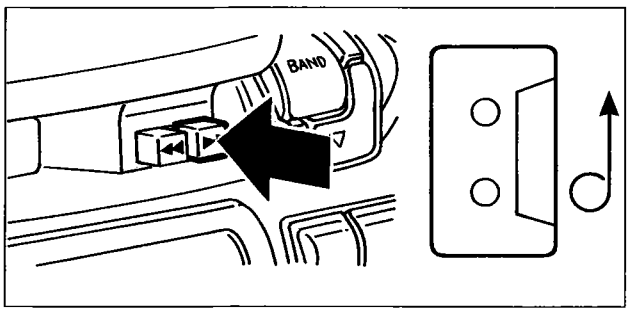

P4F068L05

Press down key shown

FAST REWINDING THE CASSETTE TAPE

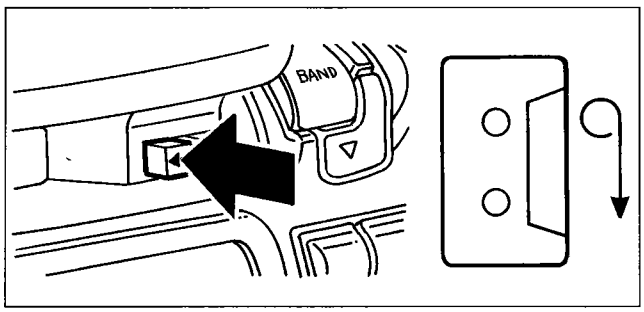

P4F068L06

Press down key shown

To stop the cassette tape playing or rewinding, lightly press the key next to the key pressed previously.

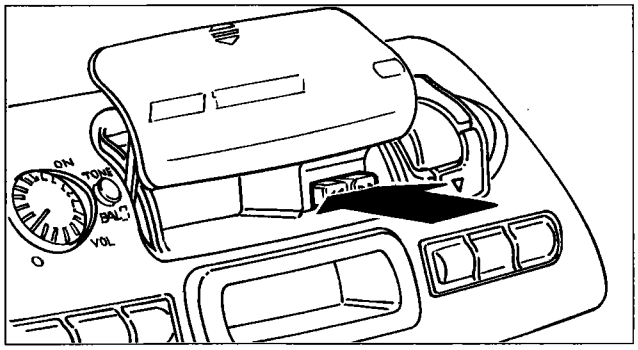

P4F068L03

AUTOREVERSE FUNCTION

When the tape ends, the cassette automatically changes sides (Autoreverse).
The side of the cassette being played is shown on the display.
To change sides, press the keys shown in the figure lightly until a click is heard.

EQUALISATION

Cassette player equalisation is selected automatically when a chrome tape is played (CrO2).

CLOCK FUNCTION

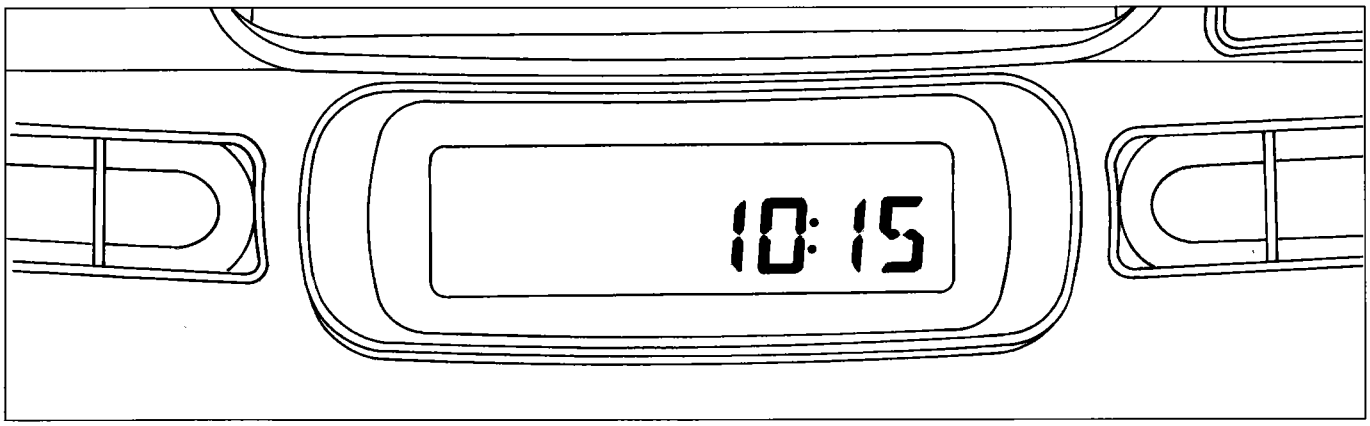

P4F069L01

The clock function displays hours and minutes. A colon beteween the hours and minutes flashes once a second on the display. The clock is permanently displayed when the radio is off.

Display modes

When the radio is on, two display modes are possible as follows:

Mode 1 (M1)

The clock is displayed instead of the radio messages (clock function priority). When the radio is turned on without a cassette in the player or a radio station is selected or a cassette is inserted with the radio on, the relevant message is displayed for about 10 seconds and then the clock appears again.

Mode 2 (M2)

Radio function messages are displayed instead of the clock (radio function priority).
When the radio is turned on, this automatically selects the mode activated before it was turned off.

Copyright Fiat Auto

Display mode selection

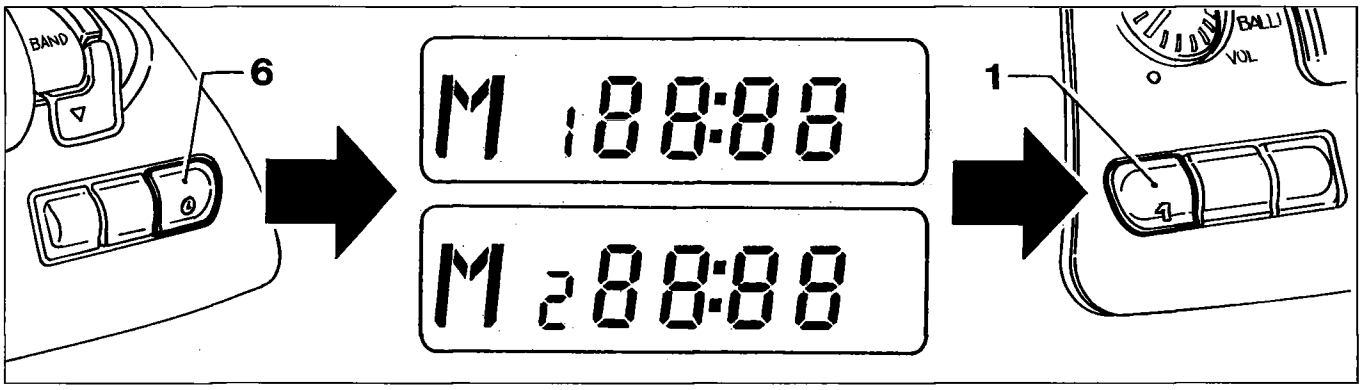

P4F070L01

Proceed as follows:
- hold key (6) down until the colon between the hours and minutes ceases to flash and the code "M1" or "M2" appears according to the display mode selected;
- press key (1) to select the other display mode;
- give another short press to key (6) to confirm the selection. The colon between the hours and minutes begins to flash again the the code "M1" or "M2" disappears.

Setting the exact time

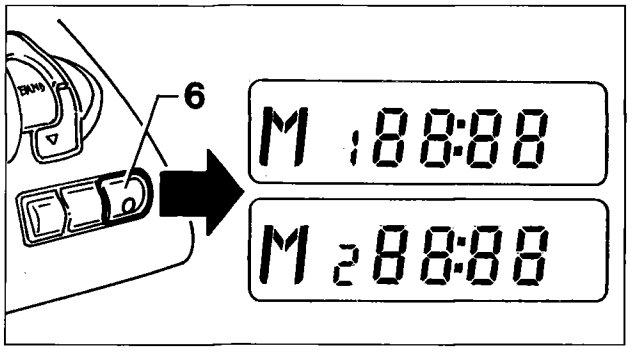

P4F070L02

Hold key (6) down until the colon between the hours and minutes ceases to flash and the code "M1" or "M2" appears according to the selected display mode;

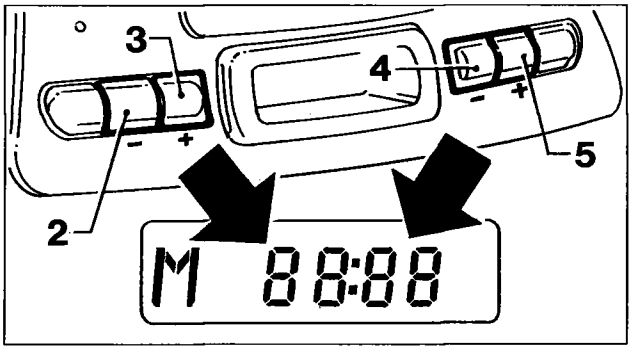

P4F070L03

Adjust the hours and minutes on the display as follows:
- decrease hours by pressing key (2);
- increase hours by pressing key (3);
- decrease minutes by pressing key (4);
- increase minutes by pressing key (5).

When keys (2-3-4-5) are pressed briefly, the hours and minutes are increased/decreased by one unit. Hold the keys down for longer to change the hour/minute display more quickly.
Once the exact hour has been set, press key (6) again. The time begins from 0 seconds and it is therefore possible to set the clock exactly. The colon between the hours and minutes begins to flash again and the code "M1" or "M2" disappears.

Changing time/frequency indication priority

Press key (6) briefly to switch between the clock and radio function message display for 10 seconds. After this, the display mode with priority automatically reappears.

Power cut-off

If the power supply to the radio is cut (even only for a few minutes), the display shows the flashing numbers "00 : 00" with a fixed colon to indicate that the clock requires resetting.

DISPLAY INFORMATION

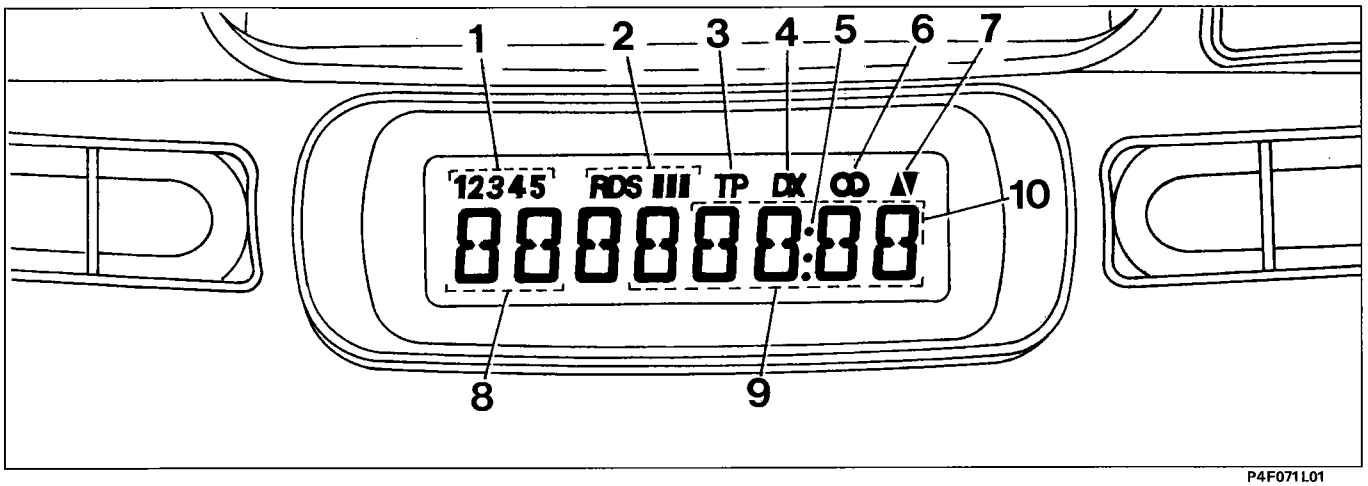

P4F071L01

1. Preset station number.
2. RDS sub-band indication.
3. Traffic Program mode selector
4. Station search sensitivity symbol.
5. Division colon between hours and minutes (in clock function).
6. Symbol indicating stereo broadcast.
7. Cassette direction (in cassette playing mode).
8. Wavelength identification letters.
9. Numbers indicating tuning frequency with decimal frequency point.
10. Hours and minutes (in clock mode).

CARE AND MAINTENANCE

Never expose cassettes to heat or direct sunlight and always replace in their cases after use. It is advisable to use good quality cassettes no more than C-90 in length to ensure excellent playing quality at all times.
Clean the panel only with a soft, antistatic cloth. Cleaning and polishing products could damage the surface.
Dirt on the playing head due to the tapes could cause a reduction in treble tone with time during playing. It is therefore advisable to clean the playing head at intervals using an appropriate non-abrasive head cleaner.

Copyright Fiat Auto

55.

AD 185 H RADIO-CASSETTE PLAYER

The vehicle may be equipped with an optional sound system which consists of the following main components:
- radio-cassette player (non-removable) AD 185 H fitted in place of the original system in the middle of the facia. The FIAT personalised front panel blends in fully with the facia styling;
- six speakers with two located at the sides on the top of the facia, another two positioned on the interior front door panels as for the previous system, and the last two positioned at the sides of the parcel rack;
- stylus-type aerial positioned on the front central part of the roof;
- additional set of main controls on the steering wheel (option).
- possibility of connection to CD player, if fitted.

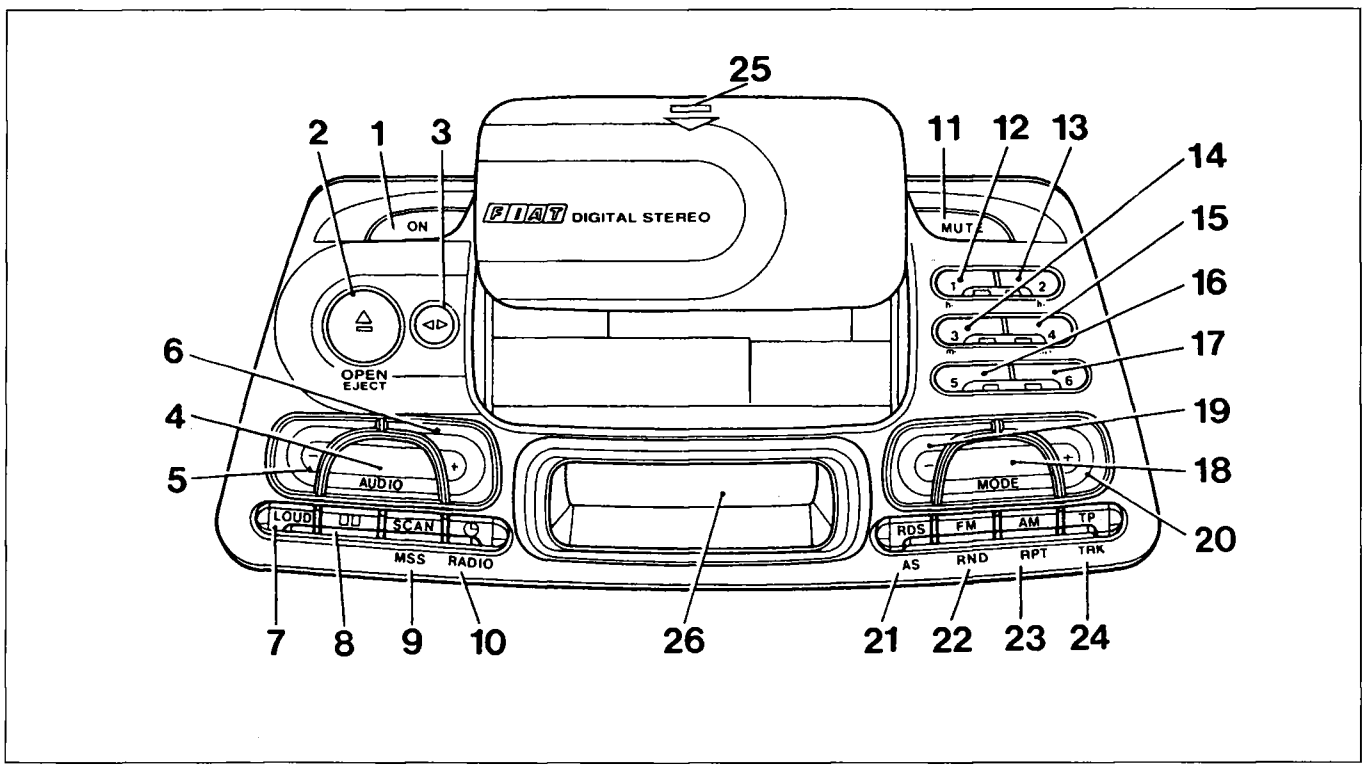

P4F19AL01

1. Key for turning radio on/off
2. Cylindrical key for automatically raising of cassette slot cover
3. Autoreverse function selector
4. Audio function selection keys: Volume, Bass, Treble, Balance, Fader and presetting of Traffic Program function volume
5. Key for adjustment of functions selected by means of key (4) in decreasing order
6. Key for adjustment of functions selected by means of key (4) in increasing order
7. Loudness function selection key.
8. Dolby B function selection key (elimination of hiss)
9. Key for sequential broadcasat of 10 seconds of each preset station / automatic search for previous or next track on cassette / sequential 10 second play of each track on the compact disc
10. Selector key for displaying radio frequency, TAPE, CD /time (press only) and for time adjustment selection (long press)
11. Mute function key
12. Station no. 1 preselection key/CD no. 1 selection/ adjustment of hours in decreasing order / entry of first anti-theft code figure.
13. Preselection key for station no. 2 / CD no. 2 selection / adjustment of hours in increasing order / entry of second anti-theft code figure.
14. Station no. 3 preselection key / CD no. 3 selection / adjustment of minutes in decreasing order / entry of third anti-theft code figure.

15. Station no. 4 preselection key - CD no. 4 selection - adjustment of minutes in increasing order - entry of fourth anti-theft code figure
16. Station no. 5 preselection key - CD no. 5 selection - time/ radio, cassette or CD function display priority selection
17. Station no. 6 preselection key / CD no. 6 selection - time/radio, cassette or CD function display priority selection
18. Radio, cassette, CD function selection key
19. Key for automatic or manual search in decreasing order of station frequency - rewind cassette tape - select previous CD track
20. Key for automatic or manual search of stations in increasing order of frequency - cassette fast forward - select next CD track
21. Key for selection of RDS - automatic station storage
22. Key for selection of FM radio band - selecting automatic or manual search mode for stations - random CD track play
23. Key for selection of Medium Wave / Long Wave radio band - select automatic / manual station search mode - replay CD
24. Key for selection of Traffic Program function - select anti-theft mode with safety code - replay CD track
25. Closure point for cassette slot cover
26. Display

Partial view of rear part of radio

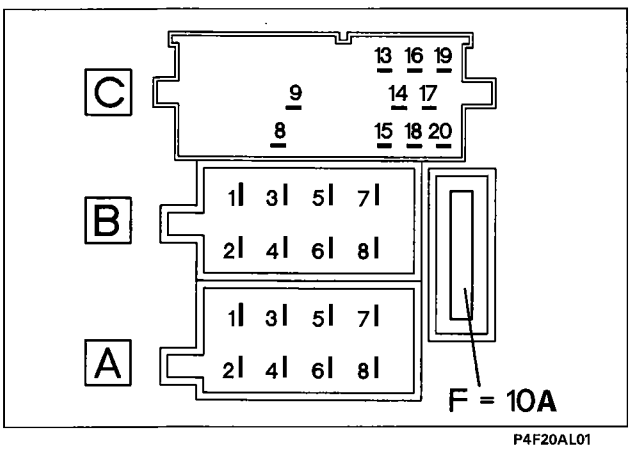

F= Safety fuse

SEAT OF CONNECTOR A	
N°	Connection
1	NC
2	NC
3	NC
4	Ignition power(15)
5	NC
6	Lighting
7	Power supply (+30)
8	Right facia earth

SEAT OF CONNECTOR B	
N°	Connection
1	+ Right hand rear speaker
2	- Right hand rear speaker
3	+ Right front speaker
4	- Right front speaker
5	+ Left front loudspeaker
6	- Left front loudspeaker
7	+ Left hand rear speaker
8	- Left hand rear speaker

SEAT OF CONNECTOR C	
N°	Connection
8-9	Connection of controls on steering wheel
13	CD data input
14	NC
15	CD earth
16	+ Power supply CD
17	+ Service
18	CD AF earth
19	Left CD channel
20	Right CD channel

Copyright Fiat Auto

55.

Wiring diagram

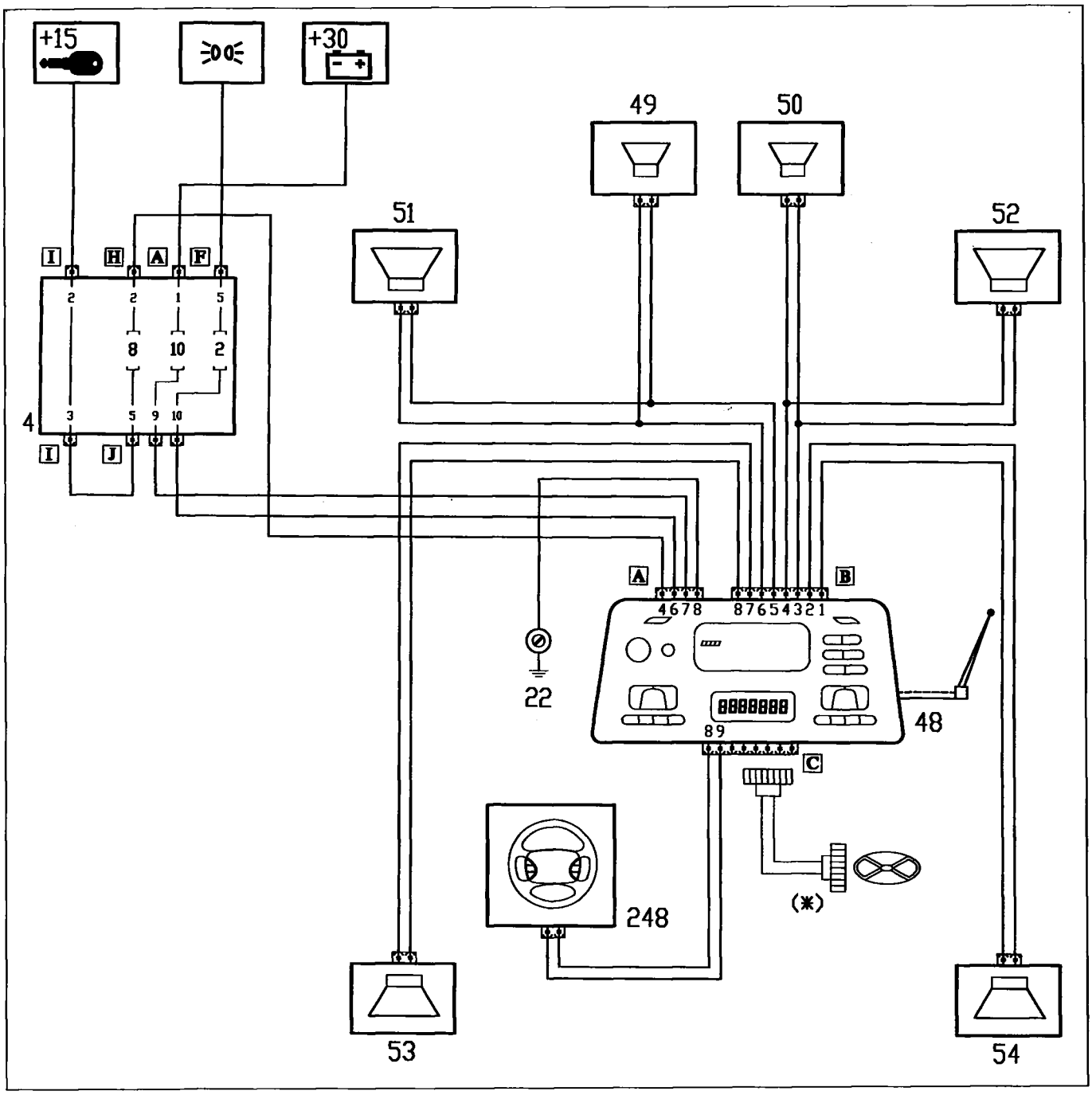

P4F21AL01

4. Junction unit
22. Left hand facia earth
48. Radio with clock
49. Left front loudspeaker (tweeter)
50. Right front speaker (tweeter)
51. Speaker on left hand front door
52. Speaker on right hand front door
53. Left hand rear speaker
54. Right hand rear speaker
248. Radio controls on steering wheel

(*) Connection for Compact Disc

OPERATING DESCRIPTION FOR RADIO MODEL AD 185 H

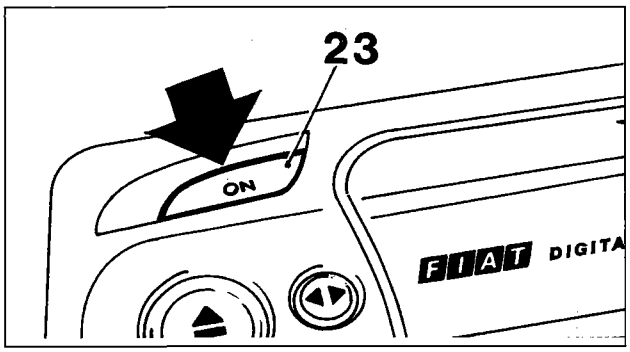

P4F075L01

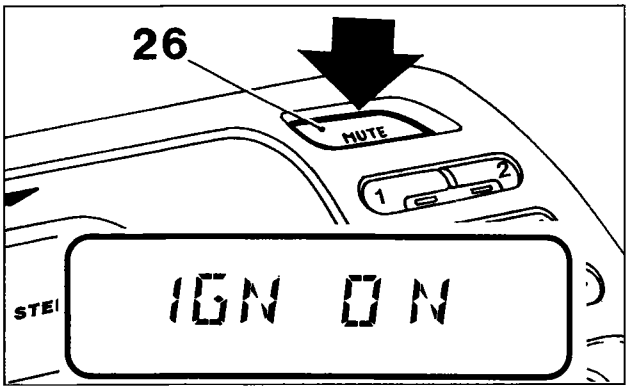

P4F075L02

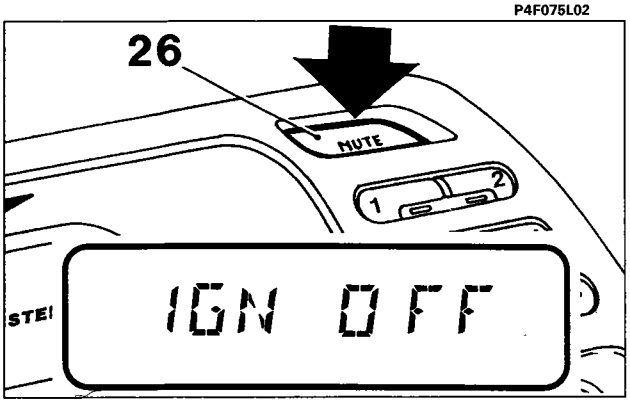

P4F075L03

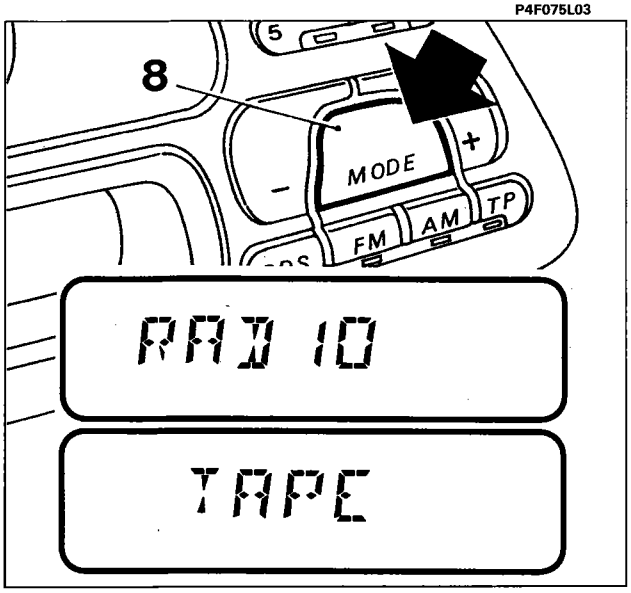

P4F075L04

TURNING ON THE RADIO

Press the ON key (23) once : the radio comes on. If turned on with the engine off, the radio goes off automatically after about 20 minutes.

Turning on/off when the engine is started/-turned off

The radio is equipped with an ignition system which, when active, allows the radio to be turned on/off when the engine is started/-turned off.

Proceed as follows to activate the system:

- keey the "MUTE" key (26) pressed down with the radio off until the wording "IGN ON" appears on the display, then turn on the radio by means of the "ON" key (23).

The system is activated only when the radio is turned on using the "ON" key (23).

To de-activate the system, proceed as follows:

- keep the "MUTE" key (26) pressed down with the radio off until the wording "IGN OFF" appears on the display.

Regardless of whether the ignition system is on or off, the radio may be turned on/off and the MUTE function may be activated/de-activated. The function may be selected with the radio on as indicated in the paragraph "Mute function", without the system being activated or de-activated.

SELECTING RADIO/CASSETTE/COMPACT DISC FUNCTIONS

Press "MODE" key (8) repeatedly to select one of the following functions cyclically:

- RADIO: the wording "RADIO" appears temporarily on the display;
- CASSETTE (if inserted): the wording "TAPE" appears temporarily on the display;
- COMPACT DISC (if CD player fitted: the wording "CD" appears temporarily on the display.

NOTE *This function may also be activated by means of a key on the steering wheel (if fitted).*

NOTE *If functions cannot be selected (e.g. cassette player when no cassette is insesrted, CD when no CD is present) they are automatically excluded.*

PAUSE FUNCTION

If another function is selected while playing a cassette or compact disc (e.g. the Radio), playing is interrupted. When the system is turned back to "Cassette" or "Compact Disc" mode, playing continues from the point at which it was broken off. If another function is selected while listening to the radio, the last station selected is tuned in when radio mode is selected again.

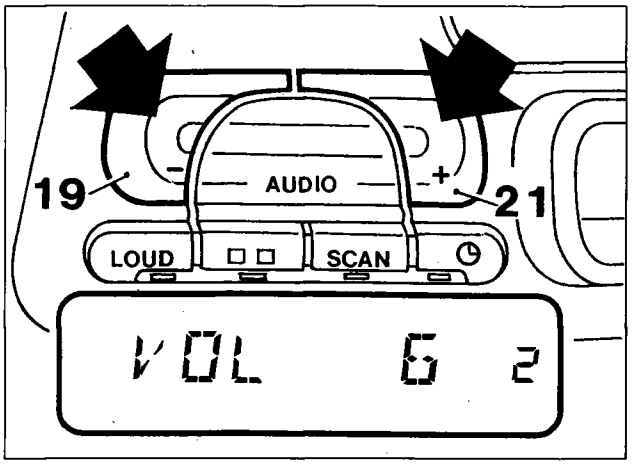

P4F076L01

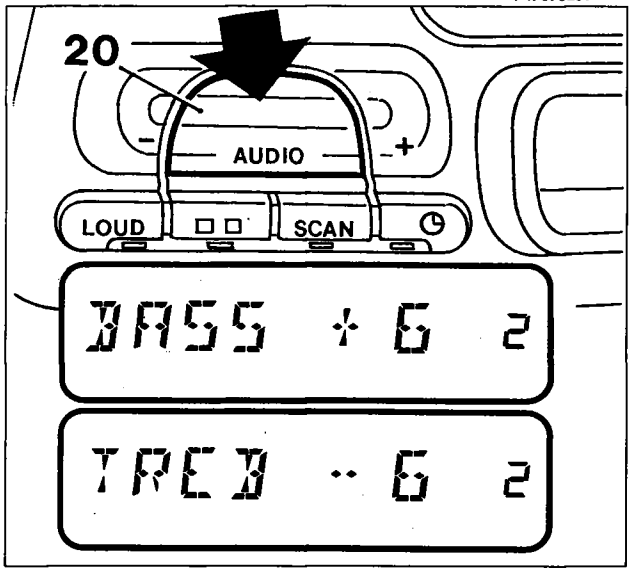

P4F076L02

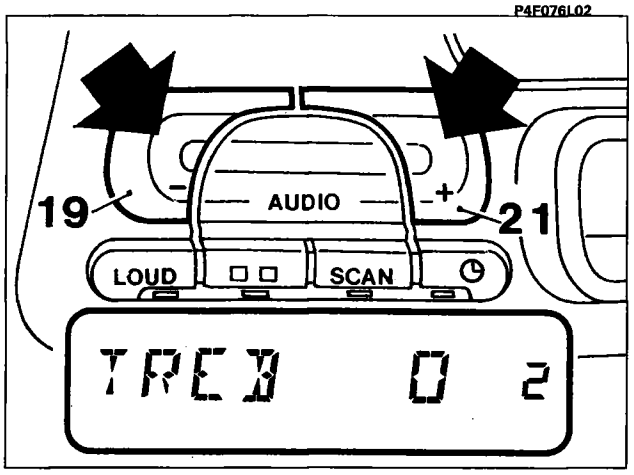

P4F076L03

VOLUME ADJUSTMENT

- Press "AUDIO +" key (21) to increase the volume or "AUDIO -" key (19) to reduce it;
- give the key short presses to achieve a gradual change in steps;
- hold the key down for longer to achieve a fast change and the wording "VOL" appears on the display together with the sound level;

NOTE *This function may also be activated by means of keys on the steering wheel (where fitted).*

TONE ADJUSTMENT

- Give the "AUDIO" key (20) short repeated presses until the wording "BASS" or "TREB" appears on the display (select adjustment of Bass or Treble)
- press "AUDIO +" key (21) to make bass or treble louder or the "AUDIO -" key (19) to reduce it;

NOTE *The "BASS" and "TREB" settings are between - 6 and + 6.*

- give the key a short press to achieve a gradual change in steps;
- hold the key down for longer to achieve a fast change;
- press "AUDIO +" and "AUDIO -" keys at the same time. Adjustment in central position is selected and the reset bass/treble level appears on the display.

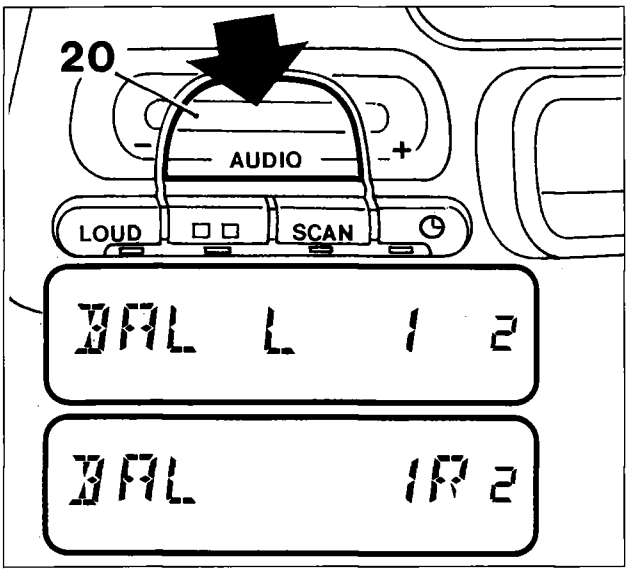

P4F077L01

BALANCE ADJUSTMENT (betwen right and left speakers)

- Give the "AUDIO" key (20) short, repeated presses until the wording "BAL" appears on the display (balance adjustment selection);
- press the "AUDIO +" key (21) for a louder sound from the right speakers or the "AUDIO -" key (19) for a louder sound from the left speakers. Balance levels appear on the display (L = left, R = right)
- give the keys short presses to achieve a gradual change in steps;
- the change is faster if the keys are held down;

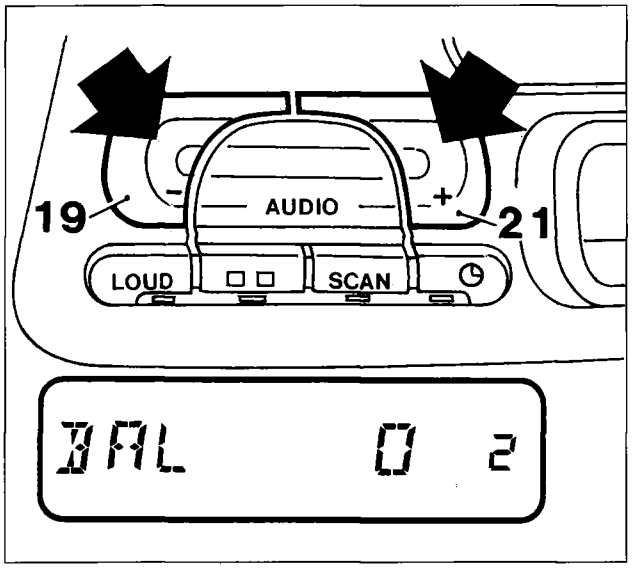

P4F077L02

NOTE *The "BAL L" and "BAL R" settings are between 0 and 15.*

- if "AUDIO +" and "AUDIO -" are pressed at the same time, adjustment in central position is selected and the reset balance level appears on the display.

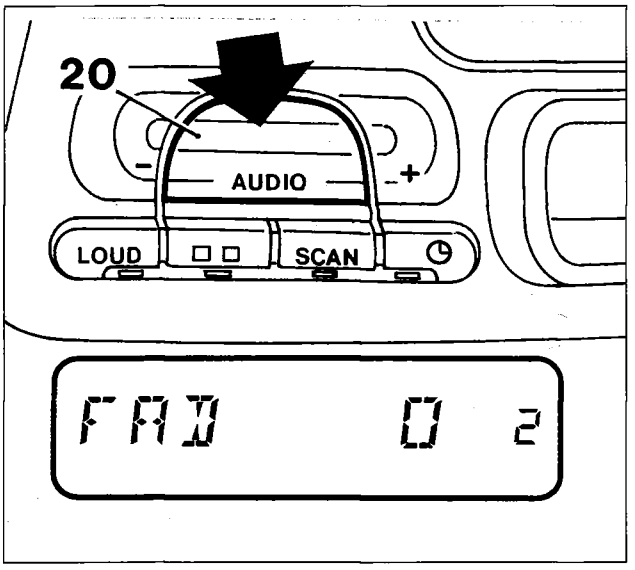

P4F077L03

FADER ADJUSTMENT (balance between front and rear speakers)

- Give the "AUDIO" key (20) short, repeated presses until the wording "FAD" (Fader adjustment selection) appears on the display.

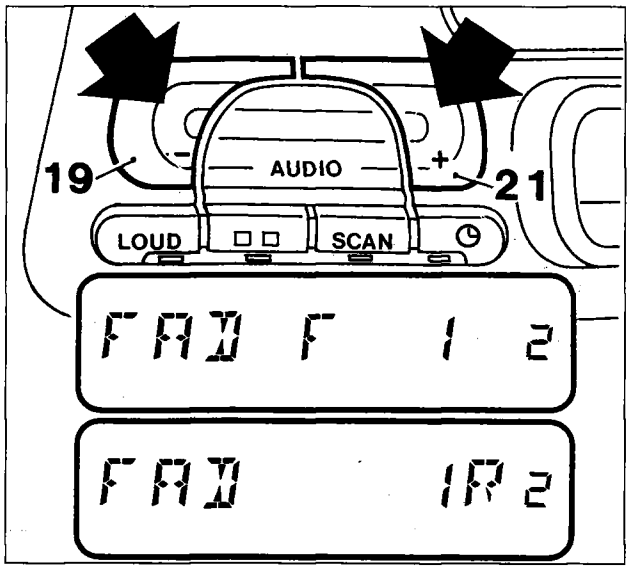

P4F078L01

- press the "AUDIO +" key (21) for a louder sound from the rear speakers or the "AUDIO -" key (19) for a louder sound from the front speakers. Fader levels (F = front; R = rear) appear on the display.
- give the keys short presses to achieve a gradual change in steps;
- hold down the keys for longer for a fast change;

NOTE *The "FAD F." and "FAD R" settings are between 0 and 15.*

- hold down "AUDIO +" and "AUDIO -" keys to select adjustment in central position and the reset Fader level appears on the display (see figure at bottom of previous page).

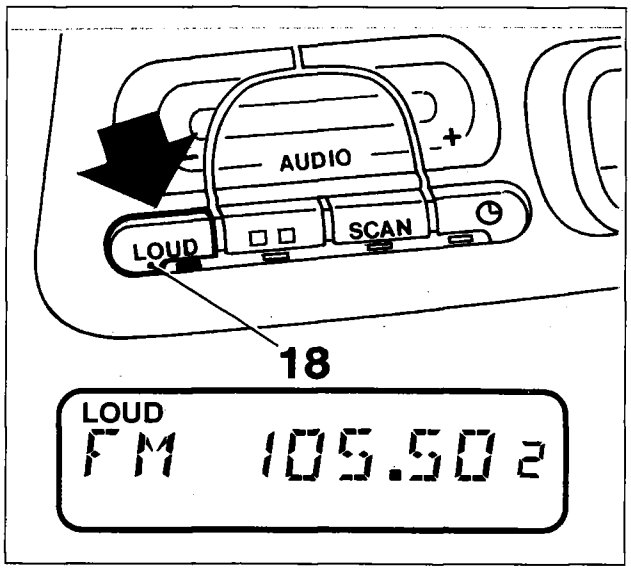

P4F078L02

LOUDNESS FUNCTION

- Press "LOUD" key (18) to activate/de-activate this function, which emphasises the bass tone during playing. If the function is activae, the led beneath the key comes on and the wording "LOUD" appears on the display.

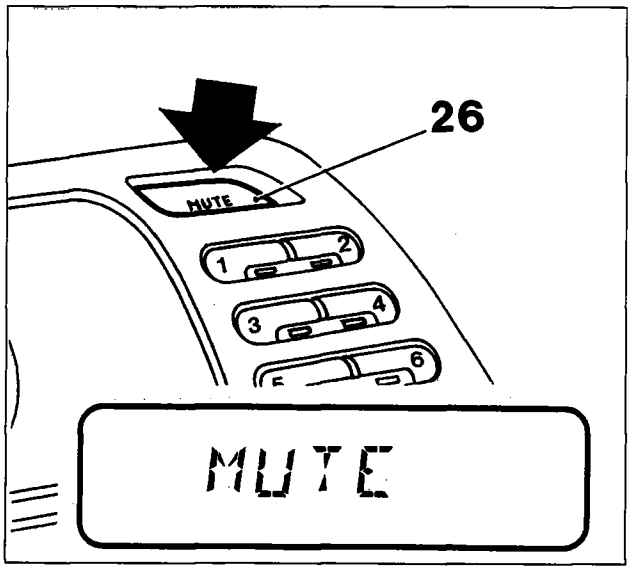

P4F078L03

MUTE FUNCTION

- Press the "MUTE" key (26) to activate/de-activate this function. If the function is active, the radio does not send any more signals to the speakers the wording "MUTE" appears on the display.

NOTE *This function can also be activated by means of a key on the steering wheel (if present).*

RADIO FUNCTION

Reception condtions alter constantly during driving. Reception may be disturbed by the presence of mountains, buildings or bridges, particularly when the car is a long way from the station broadcaster.

NOTE *When the "RADIO" funtion is active, the last station tuned into before turning the unit off is received.*

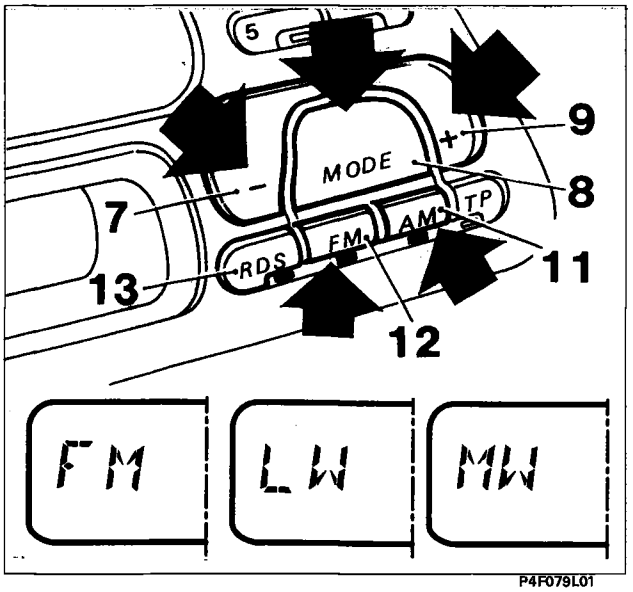

P4F079L01

Function selection

The radio comes on as soon as the unit is turned on. To select the Radio function while listening to a cassette or compact disc, press the "MODE" key (8) repeatedly until the word "RADIO" appears on the display.

Band selection

Press the "FM" key (12) or "AM" key (11) briefly to select the required reception band (a led comes on beneath the selected key).

Once the "AM" key (11) has been pressed, "MW" or "LW" stations are selected.
To select RDS (Radio Data System) stations, see the description given on the following page (RDC FUNCTION).

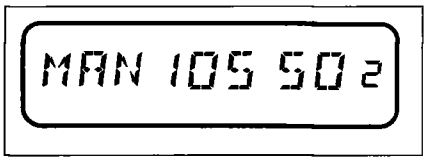

P4F079L02

Manual tuning

Used to select stations in the selected band manually.

- Select band: "FM", "MW" or "LW".
- hold "FM" key (12) down (if FM band has been selected) or the "AM" key (11) (if MW or LW band has been selected) until the wording "MAN" appears on the display.
- press "MODE +" key (9) or "MODE -" key (7) to select the required station;
- frequency changes gradually in steps when the key is pressed briefly;
- frequency changes quickly if the key is pressed down for longer.

The manual search function is not active for RDS1 and RDS2 bands.

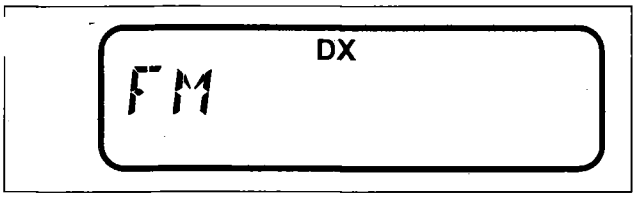

P4F079L03

Automatic tuning mode returns ("MAN" disappears from the display) after 60 seconds or if one of the station storage keys numbered "1" to "6" is pressed. In the latter case, the station stored on the relevant key is selected.

Automatic tuning

Allows stations in the selected band to be searched for automatically.

- Select the band: "RDS1", "RDS2", "FM", "MW" or "LW";
- press the "MODE +" key (9) or the "MODE -" key (7);

Search sensitivity increases once the search has gone through the full frequency range twice (the wording "DX" appears on the display).

NOTE *The station search carried out using keys (7) and (9) may also be activated using the corresponding keys on the steering wheel (where present).*

Storing last station selected

The last station selected for each reception band is automatically stored in the memory and then selected when the radio is turned on or the reception band is changed.

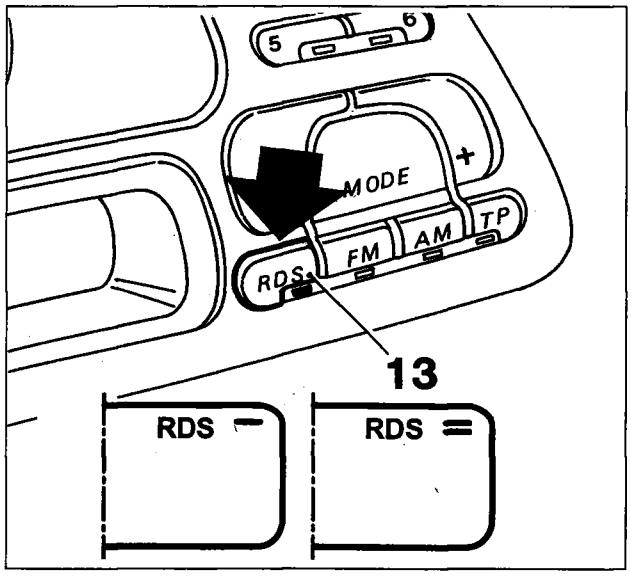

P4F080L01

RDC FUNCTION (Radio Data System)

To select stations broadcasting via RDS (Radio Data System), briefly press the "RDS" key (13) (a led beneath the key comes on). Whenever the key is pressed, stations under "RDS1" (the wording "RDS -" appears on the display) or "RDS2" (the wording "RDS =" appears on the display) are selected.
When transmitters are active, the RDS system permits automatic tuning to the optimal frequency for the selected station. It is therefore possible to continue listening to the station without altering the frequency when the car moves to a different area. Of course it must be possible to receive the relevant station within the area the car is travelling through at the time.
The name of the station broadcasting via RDS appears on the display.

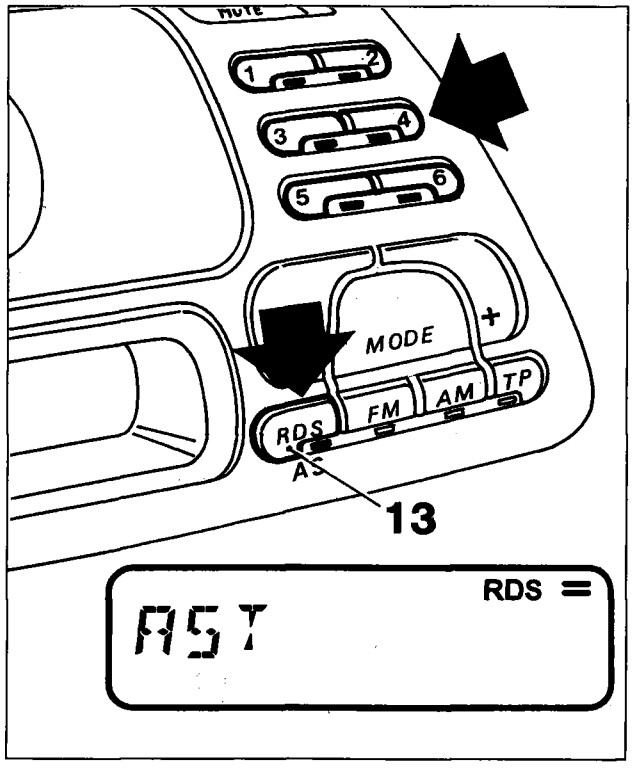

P4F080L02

Automatic storage within the RDS2 band (AUTOSTORE)

Six stations can be stored in the RDS2 band. If RDS mode (RDS1 or RDS2) has already been selected, hold the "AS" key (13) down until the sound goes off.
Stations are now stored automatically on keys (1), (2), (3), (4), (5) and (6). These broadcast programmes via RDS using the most powerful signal available at the time. The system scans the full frequency range up to two times with increasing search frequency.
During the search, the display shows the wording "AST". Once the station has been stored, the radio tunes automatically to the frequency stored on key (1).

Autostore is activated if band RDS1 or RDS2 is set.

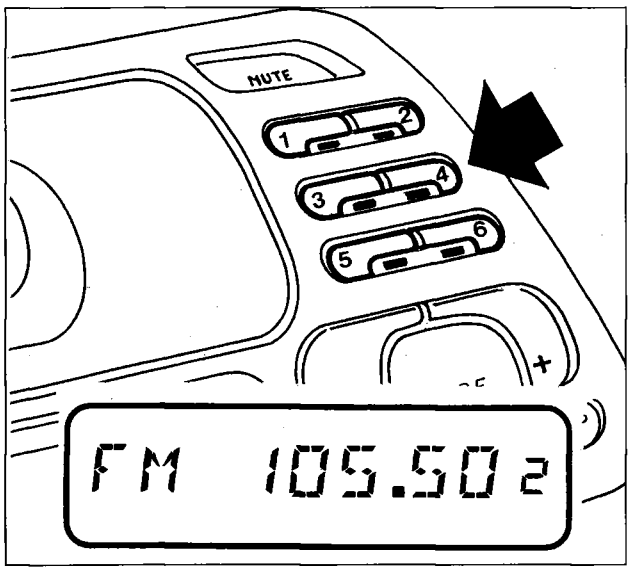

P4F081L01

Manual storage of one station

The current station can be stored within the selected range by means of keys (1), (2), (3), (4), (5) and (6).
Hold down the key you wish to use to store the station until the station can be heard again. A led beneath the key comes on and a number corresponding to the key appears on the display.
The memories remain active even when the power is turned off.

Listening to stored stations

Proceed as follows:
- Select the required band by means of keys (11), (12) and (13) (see page 50/7);
- briefly press one of the six station storage keys;

A led comes on beneath the key and a number corresponding to the key appears on the display. An automatic frequency is automatically searched for within RDS1 and RDS2 bands if the reception is poor (the wording "SRC" appears during the search).

TP function (Traffic Program)

Some stations belonging to RDS1, RDS2 bands also broadcast information on traffic conditions.

The traffic program (TP) function can be used to:
a) search only for RDS stations broadcasting traffic information;
b) receive traffic information even if the cassette recorder or Compact Disc is playing;
c) receive traffic information at a minimum pre-set volume even with the radio volume turned right down.

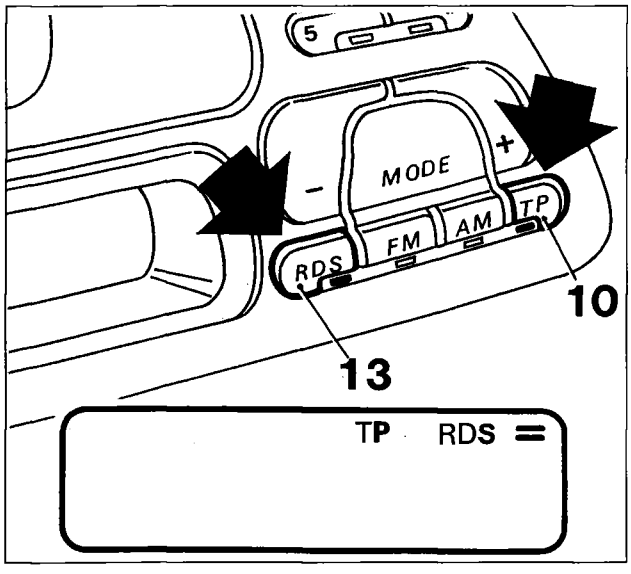

P4F081L02

NOTE *Instructions for carrying out each of the operations described under points a), b) and c) described previously are given below*

Point a)

- Select a RDS1, RDS2 band, briefly press "RDS" key (13) (a led comes on beneath the key);
- briefly press "TP" key (10), when the wording "TP" appears on the display (a led comes on beneath the key).

If the first station does not provide traffic information, the radio will automatically tune to the closest station able to give traffic information.

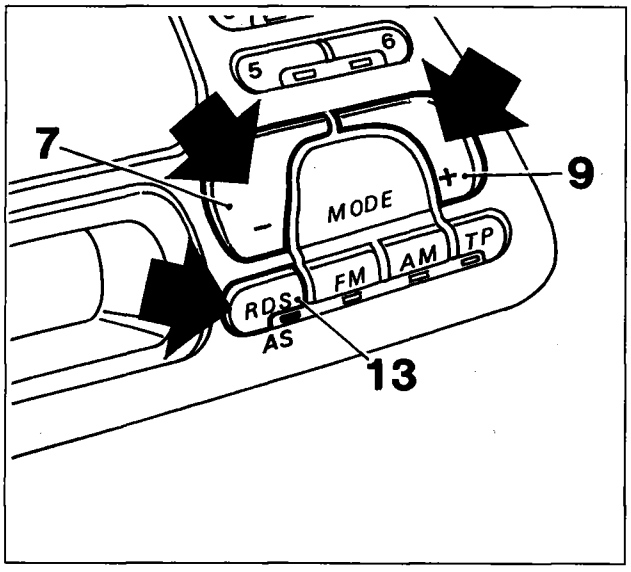

P4F082L01

To search for other stations able to provide this service, press tuning keys "MODE -" (7) or "MODE +" (9).
To store stations offering the "TP" function, carry out storage procedure (see paragraph "Storing a station").

As an alternative to manual storage, hold down "AS" key (13) until the sound goes off when automatic storage will occur (see paragraph "Automatic band storage RDS2 - Autostore")

Point b)

To receive traffic information, before inserting a cassette or compact disc, tune to a RDS TP station. If traffic information is broadcast by the station while a cassette or compact disc is being played, the cassette or compact disc is temporarily stopped and resumes playing again automatically when the message is over.

Point c)

Even while not listening the radio, it is possible to receive traffic information. After tuning to a TP RDS station and turning the volume right down, if the same station broadcasts traffic information this will be played at a preset minimum volume.

Radio stations in some countries do not broadcast traffic information even when the TP function is active.

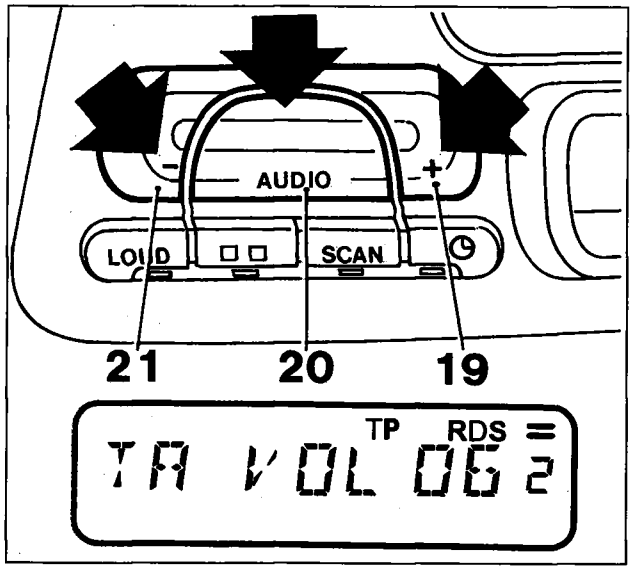

P4F082L02

Presetting a volume level for the TP function (Traffic Program)

- Select the required volume level by means of "AUDIO -" key (19) and "AUDIO +" key (21);
- hold down "AUDIO" key (20) until the display shows the wording "TA VOL XX", where "XX" is the preset volume level;

NOTE *The preset volume level may vary from 5 to 31 (max. volume).*

If no level is preset or volume is set to a minimum level of 5, level 5 is automatically selected.

EON function (Enhanced Other Network)

In certain countries, several stations broadcasting traffic information are grouped together in circuits.

In this case, broadcast of an RDS station program will be temporarily interrupted to receive traffic information whenever such information is broadcast from one of the stations in the circuit.

To exclude the EON function, briefly press "TP" key (10) (the led beneath the key goes off).

Scanning stored stations (SCAN function)

This function is used to tune cyclically (for a period of 10 seconds each) to all possible stations stored within the relevant band.
When a station is tuned during the scan, a led comes on beneath the appropriate storage key and the key number appears on the display.
Stations with a very weak signal are not played.

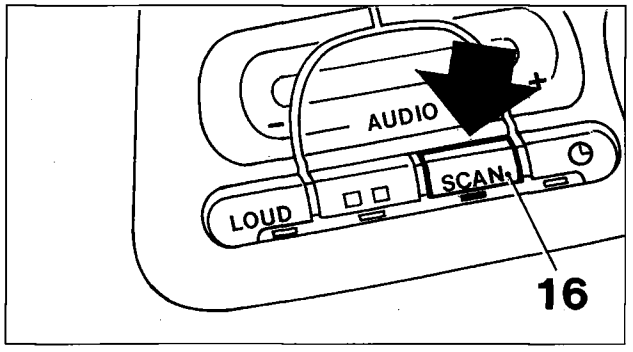

P4F083L01

To select the SCAN function, proceed as follows:
- select the required band;
- press key "SCAN" (16) (led beneath key comes on).

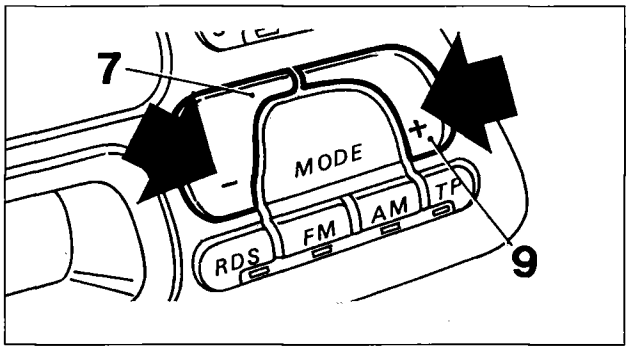

P4F083L02

The search direction may be reversed as required by pressing keys "MODE +" (9) or "MODE -" (7).
To interrupt the scan, press "SCAN" key (16) again : the led beneath the key goes off and the station present at that moment can be heard again.

Stereo broadcasts

When the station broadcasts a program in stereo, the symbol indicated by the arrow in the lower figure appears on the display.
If the incoming signal is weak, the broadcast is automatically switched from Stereo to Mono.

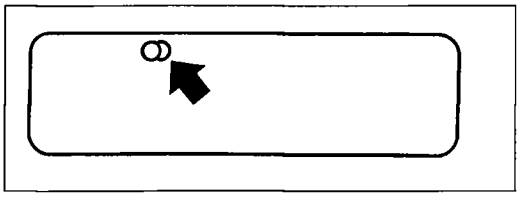

P4F083L03

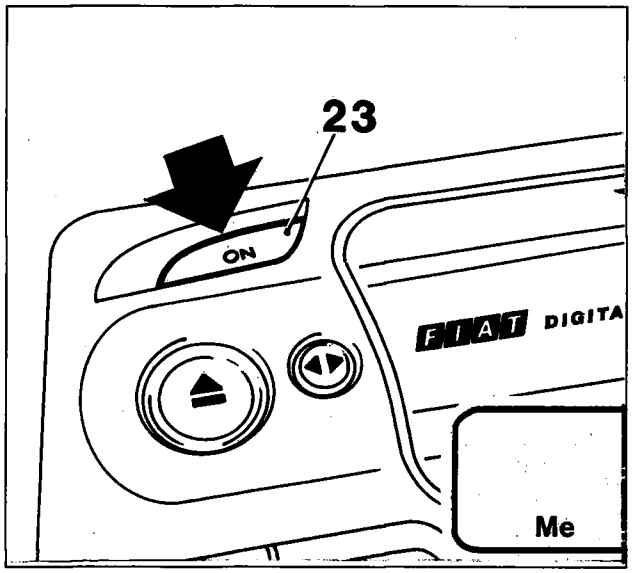

P4F084L01

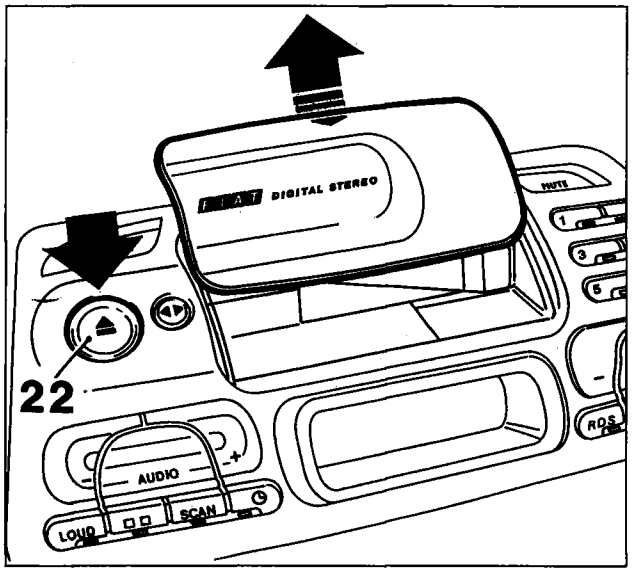

P4F084L02

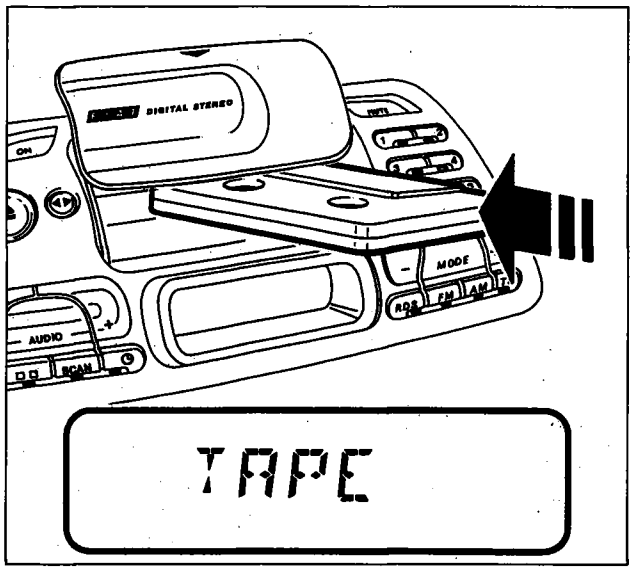

P4F084L03

CASSETTE PLAYER

The radio is equipped with a cassette player, with an "Autoreverse" function which allows both sides of a tape to be played without turning the cassette over.

Automatic equalisation selection

According to the type of taped used, the cassette player automatically switches to the correct equalisation.
If CHROME (CrO2) or METAL tapes are used, the wording "Me" appears on the display.

Playing a cassette

- Turn on the radio by pressing ON (23);

- press key (22), to open cassette flap;

- push a cassette fully into the slot until it is taken in by the unit. Playing begins and the word "TAPE" appears on the display

NOTE *Insert a cassette into the slot only when the radio is turned on to ensure that the automatic feed mechanism works properly.*

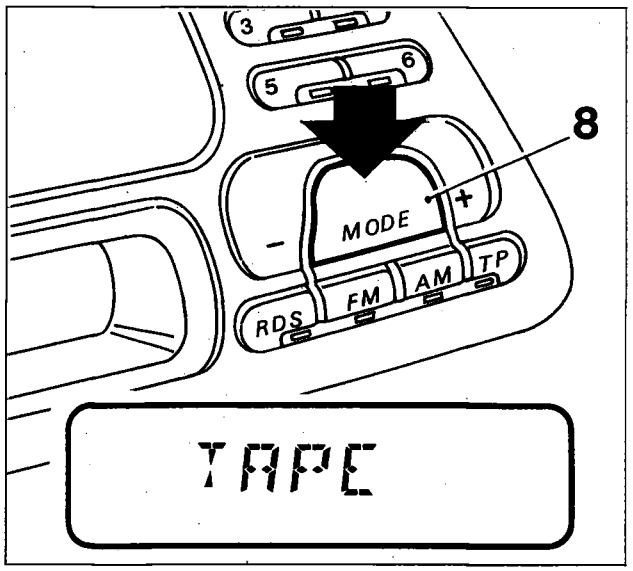

P4F085L01

- to play a cassette already inserted previously while listening to the radio or a compact disc, press "MODE" key (8) repeatedly until the wording "TAPE" appears on the display.

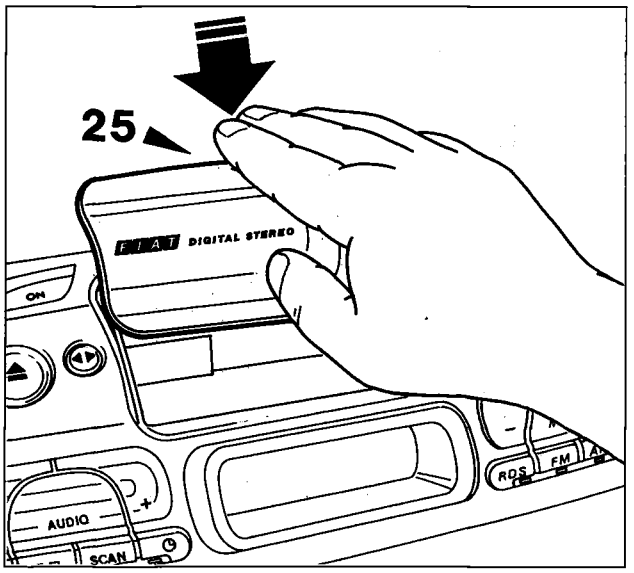

P4F085L02

- to close the cassette slot, press vertically on the point indicated on the symbol shown above the hand in the figure alongside (25). Close the flap until the retainer clicks;

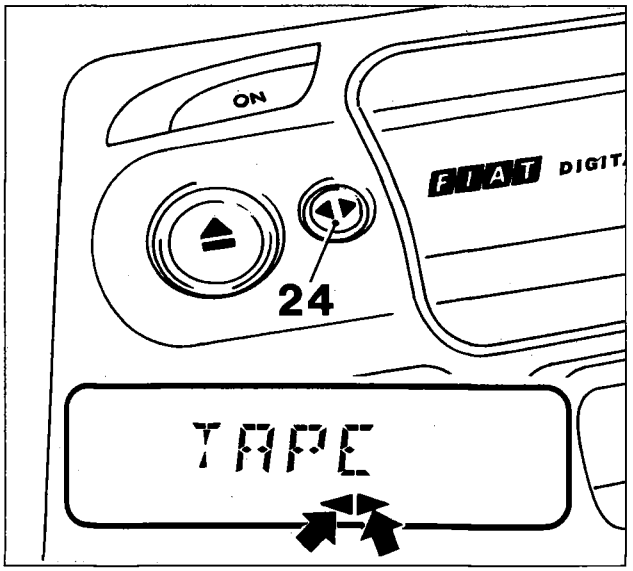

P4F085L03

Changing sides

When the tape has played, the cassette changes sides automatically (Autoreverse). The side of the cassette to be played is shown on the display.
The symbol indicated by the right hand arrow represents the upper side, whereas the symbol indicated by the left hand arrow indicates the lower side.

Press key (24) (Reverse) to change sides before the end of the tape.

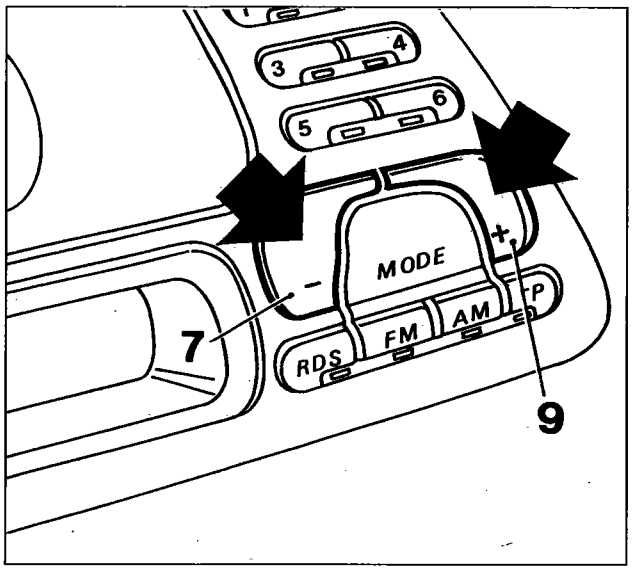

P4F086L01

Fast forward/rewind

Press key "MODE +" (9) or key "MODE -" (7) to fast forward or rewind the cassette tape.

Press the key used previously to stop the tape.

Listening to the radio while fast forwarding/rewinding the tape

While fast forwarding or rewinding the tape, the last station tuned into is played.

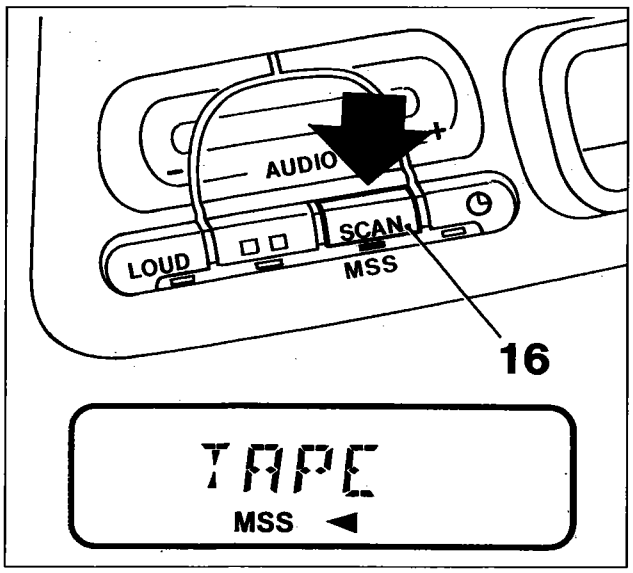

P4F086L02

Last/next track search (Music Search System)

Hold down key "MSS" (16) until the wording "MSS" appears on the display. At the same time, a led beneath the key comes on. The tape fast forwards automatically to the next track and begins playing.

With the MSS function active, press key "MODE +" (9) to listen to the next track of the cassette.

Press key "MODE -" (7) while listening to a track in order to play the track again from the beginning. Press the same key again to listen to the previous track.

Press these keys several times to scan back and forward through the tracks (one track for each press).

To interrupt the search, press the last key selected lightly (MODE + o MODE -). Playing will then begin from this point.

To exit MSS mode, press key "MSS" (16): the led goes off beneath the key and the wording "MSS" appears on the display.

The music search system may not work properly with the following types of tape:

- trapes recorded at low levels (e.g. very weak sound and poor recording quality);
- tapes with conversations;
- tapes with blank sections lasting less than 3 seconds;
- tapes with long periods of silence in the recordings;
- tapes without blank sections (e.g. live recordings);
- tapes with a lot of background noise in blank sections.

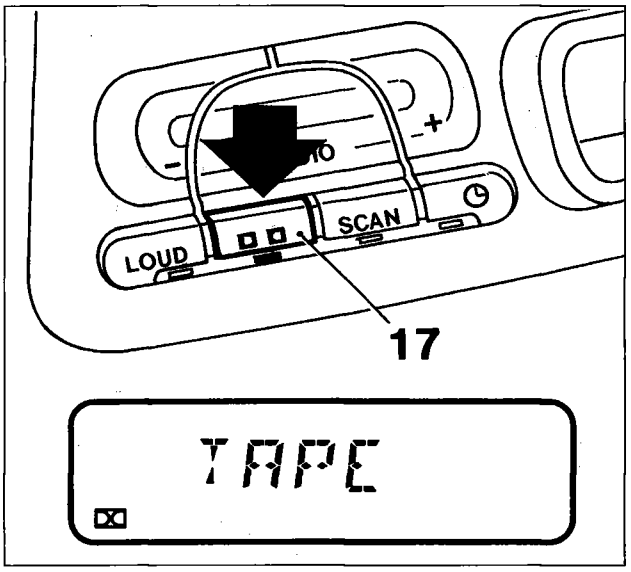

P4F087L01

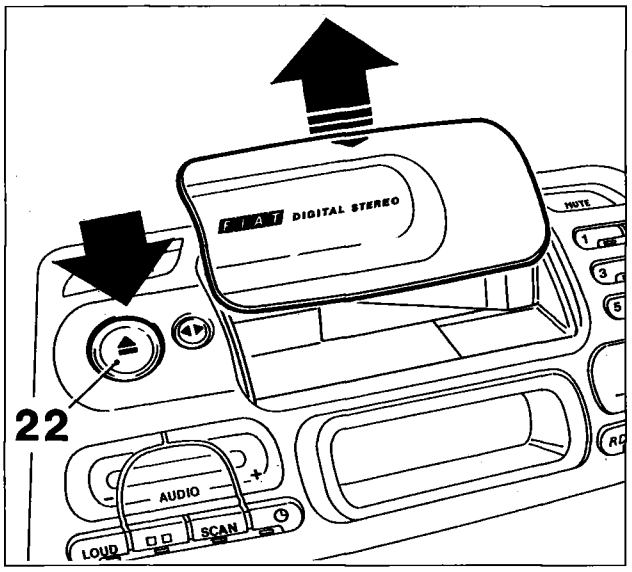

P4F087L02

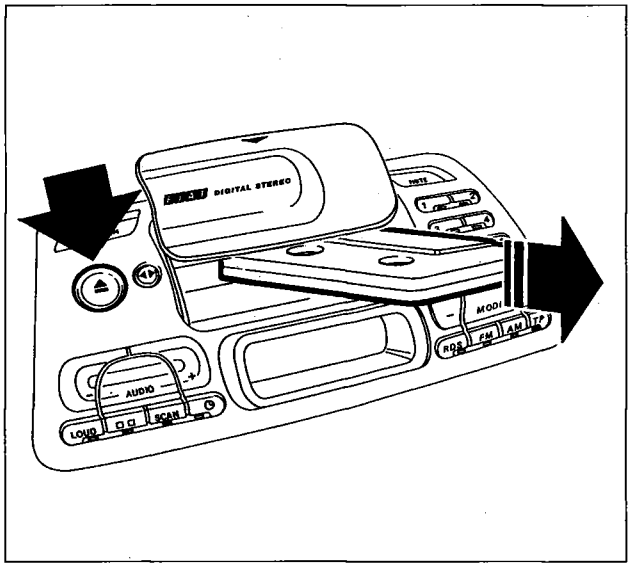

P4F087L03

Dolby B function

Press key (17) to activate/de-activate the Dolby B function (noise reduction device produced under licence from the "Dolby Laboratories Licensing Corporation") (*).
When the Dolby function is active, a led comes on beneath the key and the relevant symbol appears on the display (shown in the lower left figure alongside).

(*) Dolby and the symbol (showing two Ds side by side) are registered trademarks of the above company.

Ejecting a cassette

- Press key (22) briefly to open the cassette slot flap;
- press key (22) a second time to eject the tape.

NOTE *The same result can be achieved by holding key (22) down until the cassette is ejected.*

- After ejection, the word "TAPE" disappears from the display and the radio comes back on. The last station tuned to will be playing

NOTE *The cassette cannot be ejected when the radio is off.*

Never expose cassettes to heat or direct sunlight. Always replace them in their cases after use.
It is advisable to use good quality tapes, no longer than C90, in order to ensure excellent sound quality.
Impurities on the playing head caused by the tapes may give rise to a reduction in treble tones with time. It is therefore advisable to clean the playing heads at intervals using a non-abrasive head-cleaning cassette.

COMPACT DISC PLAYER FUNCTION

The AD185H radio can be fitted with a compact disc (CD) player
The Fiat accessory range includes a kit containing a CD player, multipolar connection lead and a mounting bracket.
The CD player is equipped with a loader able to hold up to 6 Compact Discs.

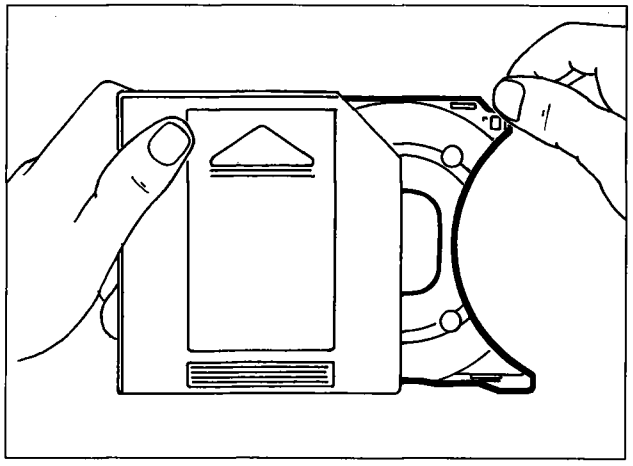

P4F088L01

Filling the Compact Disc loader

- Pull out a holder for each CD to be played;

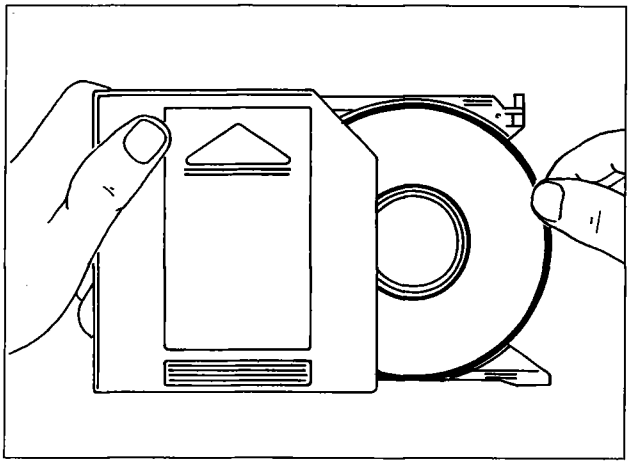

P4F088L02

- insert the CDs with the label or printed part facing the holder.

If a CD is positioned incorrectly, it will not play.

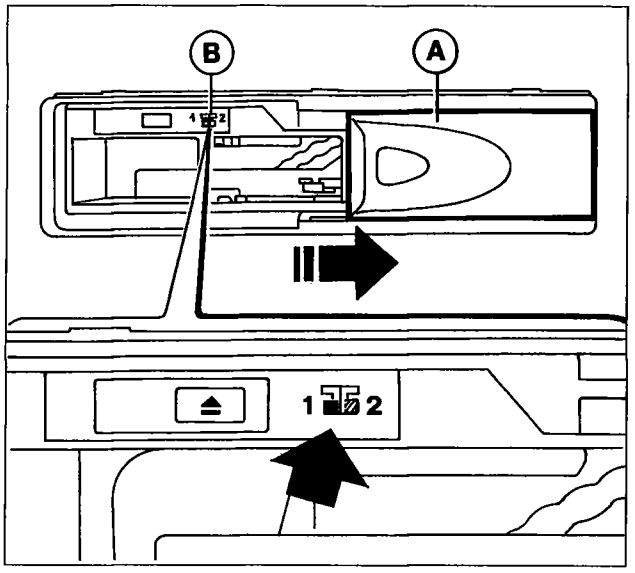

P4F088L03

Inserting CD holder

NOTE *The player is not designed to play 8 cm CDs (except by fitting special adaptors).*

Proceed as follows to insert the loader in the CD player:

- slide flap A to the right as shown in the figure until it locks;
- check that switch B is set to position "1";

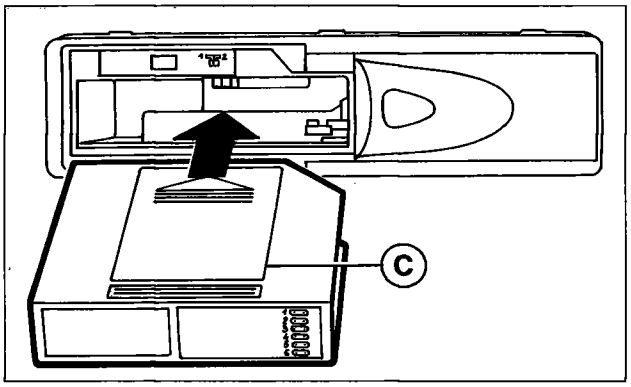

P4F089L01

- insert loader C in the CD player with the label side (arrowed) uppermost;

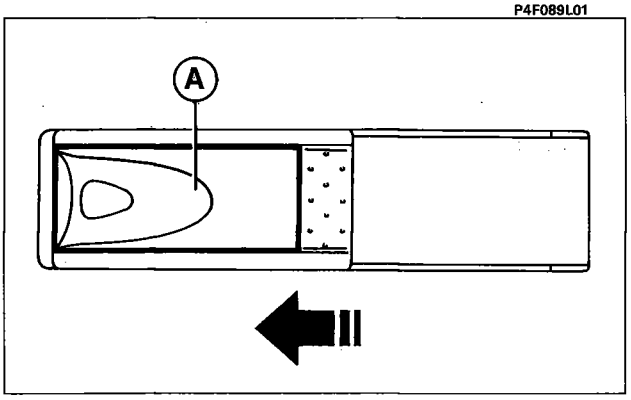

P4F089L02

- close sliding flap A again after inserting the holder to prevent foreign bodies and dust from entering the player.

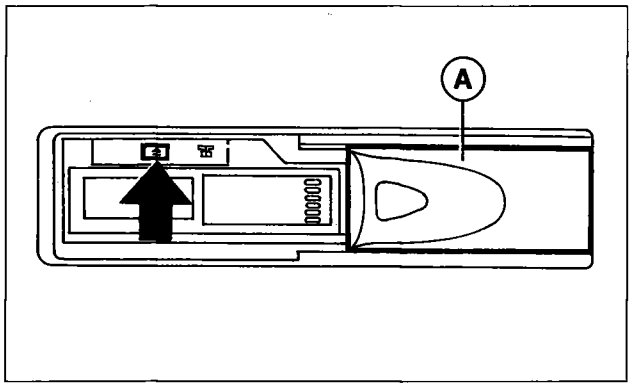

P4F089L03

Removing the loader from the CD player

Proceed as follows:
- slide flap A to the right as shown in the figure until it locks;
- press eject key (arrowed) on the CD player.

Removing CDs from the loader

Remove CDs with their holders one after one from the loader.

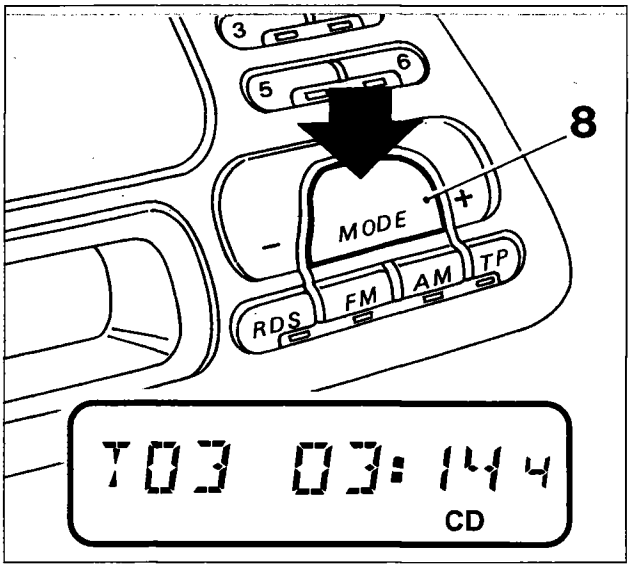

P4F089L04

CD PLAYER OPERATION

To play CDs inserted previously, press "MODE" key (8) repeatedly until the wording "CD" appears on the display.

If this function is selected after inserting the loader, the wording "CD CHECK" appears as connections and loader contents are examined.

The word "CD" appears on the display together with the track number (example "T03" = third track), playing time (example "03:14" = 3 minutes and 14 seconds) and the CD number (example "4").

Error messages

If the loader has not been introduced or not inserted correctly into the CD player, the word "MAGAZINE" appears on the display.
If the loader does not contain any CDs. The wording "NO CD" appears on the display.
If a CD is damaged or incorrectly inserted into the loader, the wording "SURFACE" appears on the display.
If the connection with the CD player is broken, the wording "CD" appears on the display.
The wording "MECHANIC" appears on the display in the case of a mechanical fault in the CD player.
If the CD player overheats, the wording "TOO HOT" appears on the display

If the above condition arises, it is advisable to turn off the CD player for a time.

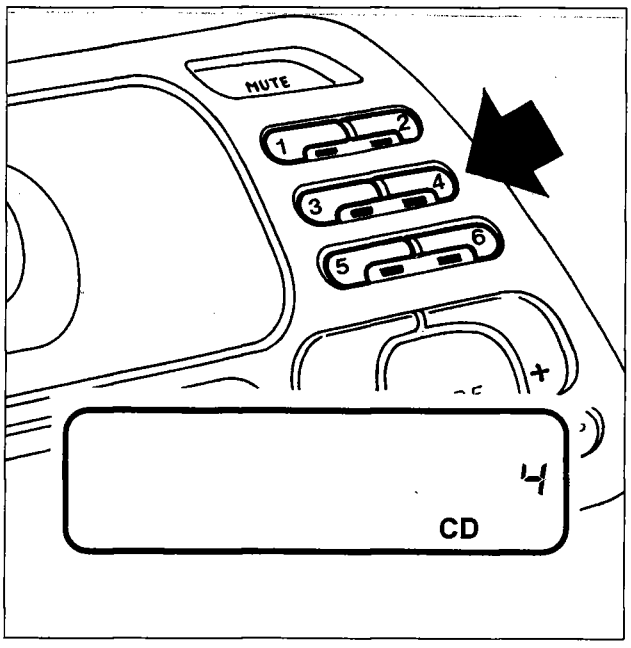

P4F090L01

Disc selection

Press one of the keys (1), (2), (3), (4), (5) and (6), to select the compact disc to be played from among those present in the holder. The selected CD number appears on the display.

If a CD is present in the loader, the led beneath the key corresponding to the relevant CD stays on. Otherwise it goes off.

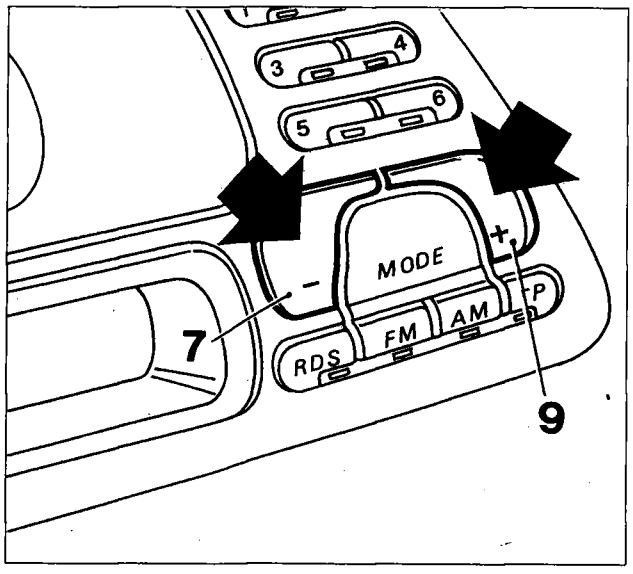

P4F086L01

Track search (forward/backward)

- Press key "MODE +" (9) to play the next track on the CD playing currently;
- press key "MODE -" (7) while listening to a track to play the track again from the beginning. Play the previous track by pressing the key twice;
- press these keys several times to move forward/backward by several tracks (one push for each track);

NOTE *If the "RANDOM" is active, (see following pages), tracks are chosen randomly from the CD playing currently.*

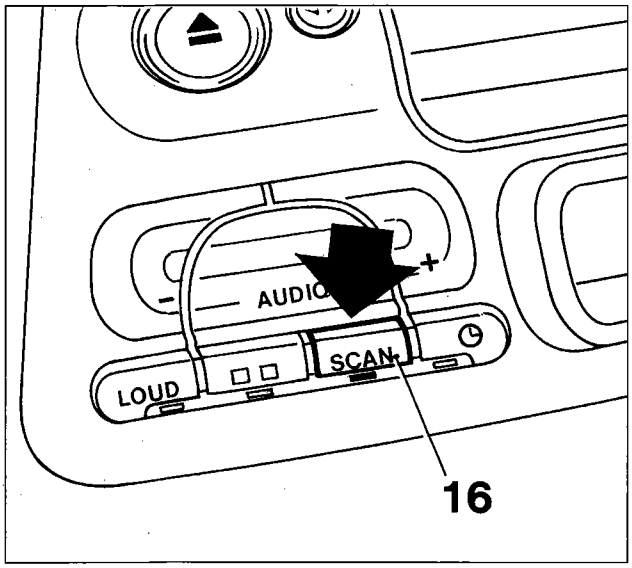

P4F091L01

Scanning tracks on the CD (SCAN function)

Press key "SCAN" (16) (a led beneath the key comes on) to listen to the beginning of all tracks on all CDs in the loader, beginning with the CD selected previously, for a period of 10 seconds each.

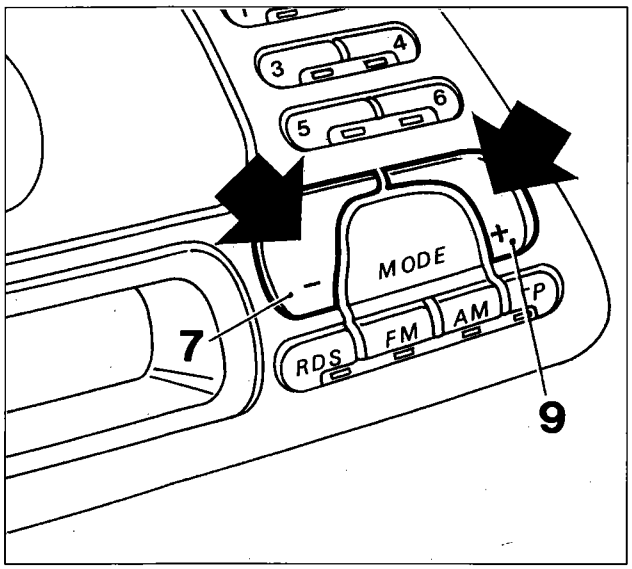

P4F086L01

NOTE *It is possible to reverse the search direction by pressing keys "MODE +" (9) or "MODE -" (7).*

- press key "SCAN" (16) to interrupt the scan while listening to a track: the led beneath the key goes off and the CD begins to play from the track in question.

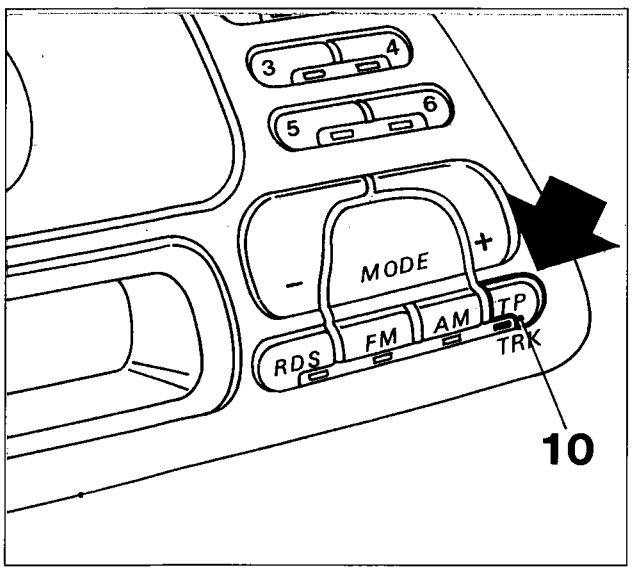

P4F091L02

Repeat track (REPEAT function)

Briefly press key "TRK" (10) (a led beneath the key comes on) to listen to the last track again.

NOTE *If another track is selected in the meantime, while still in track repeat mode, the track will be played again.*

- briefly press key "TRK" (10) (a led beneath the key goes off) to exit this mode.

Copyright Fiat Auto

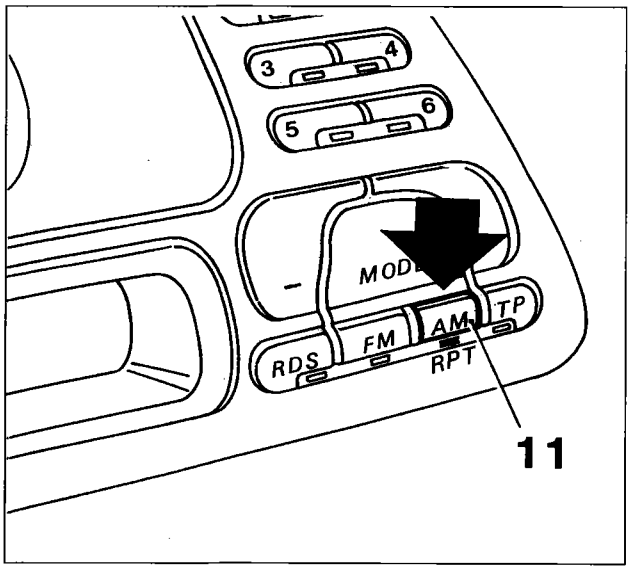

P4F092L01

CD repeat (REPEAT function)

Press key "RPT" (11) (a led beneath the key comes on) to listen to the last CD again.

NOTE *If another CD is selected in the meantime while still in CD repeat mode, the CD is played again.*

- press "RPT" key (11) again (a led beneath the key goes off) to exit from this mode.

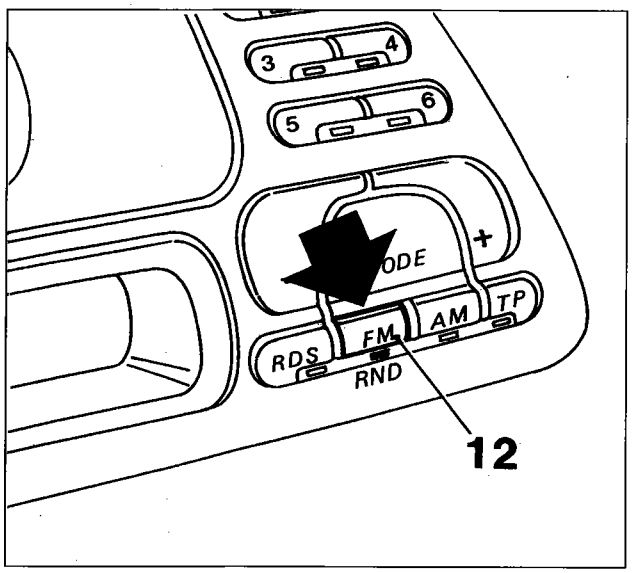

P4F092L02

Random track play (RANDOM function)

Press key marked "RND" (12) (a led beneath the key comes on) to select a CD at random from those present in the loader. All tracks on the relevant CD are played in a random sequence.

Once all the tracks have been played, another CD is selected and so on. Once all CDs have been played, random playing is resumed as before.

NOTE *If "CD repeat" mode was selected previously, all tracks on the selected CD are played in a random sequence.*

- press key "RND" (12) again (a led beneath the key goes off) to exit from "Random play" mode.

Never expose CDs to heat or direct sunlight. Always replace in their cases after use.
CDs must always be kept away from dust and the CD surface must not be touched by hand.
Avoid scratches because these will cause breaks in the sound.
If CD surfaces are dirty, use a soft cloth to clean from the centre outward. Never insert damaged or deformed CDs in the loader.

CLOCK FUNCTION

This function can be used to show hours and minutes on the display.
A colon between the hours and minutes flashes once a second.
When the radio is on, if the clock appears on the display, the led beneath key (15) comes on during time adjustment and display mode selection.
The clock is always displayed when the radio is turned off.

Display modes

When the radio is off, two display modes are available as follows:

a) **Mode 1 (M1)**

The clock is displayed instead of main function messages for the Radio (reception frequency), Cassette player (TAPE) or Compact Disc (track number and playing time).
When the radio is turned on or a function is selected (Radio, Cassette or Compact Disc, function messages are displayed for about 10 seconds before the clock reappears.

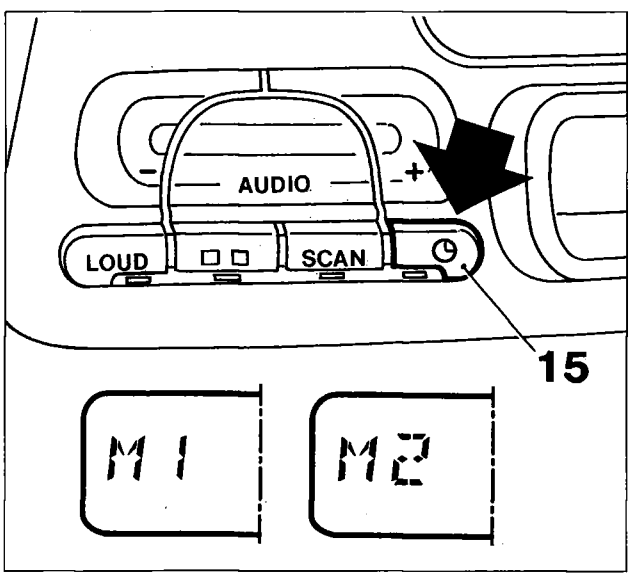

P4F093L01

a) **Mode 2 (M2)**

Radio, Cassette or Compact Disc messages are displayed instead of the clock.
When the radio is turned on, the mode present before it was turned off are automatically reselected.

Selecting display modes

- Hold key (15) down until the colon between the hours and minute stops flashing and the wording "M1" or "M2" appears on the display according to the display mode selected.

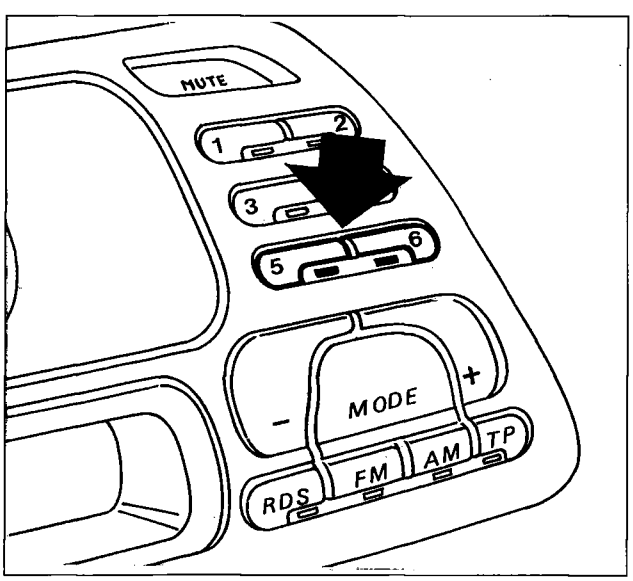

P4F093L02

- press key (5) or (6) to select Modes 1 or 2 respectively (the wording "M1" or "M2" appears on the display).

- briefly press key (15) to confirm the selection. The colon between the hours and minutes begins to flash again and the wording "M1" or "M2" disappears.

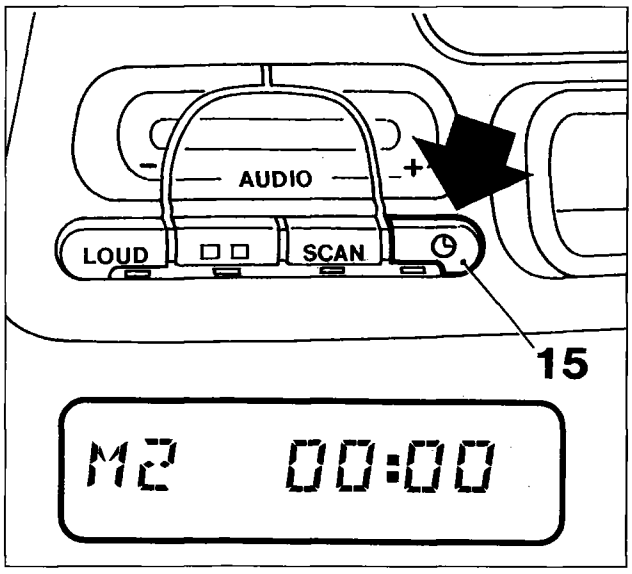

P4F094L01

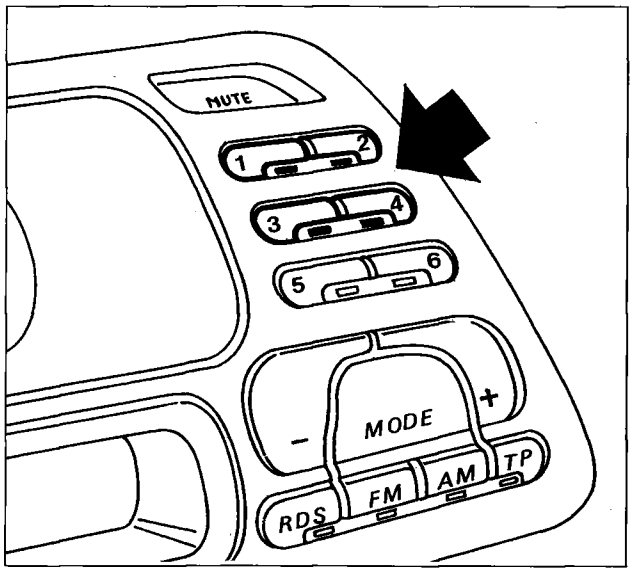

P4F094L02

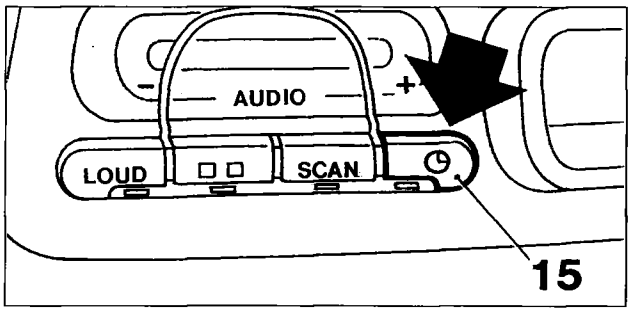

P4F094L03

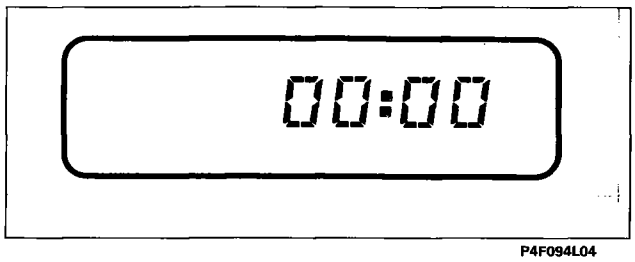

P4F094L04

Setting the exact time

- Hold key (15) down until the colon between the hours and minutes stops flashing and the wording "M1" or "M2" appears on the display according to the mode selected;
- adjust the hours and minutes shown on the display as described below:
- decrease hours by pressing key (1);
- increase hours by pressing key (2);
- decrease minutes by pressing key (3);
- increase minutes by pressing key (4);

NOTE *Briefly press the keys to increase/reduce hours and minutes by one unit. Press for longer to change hours/minutes display quickly.*

- Once the exact time is set, briefly press key (15). The time counter begins from 0 seconds and it is therefore possible to set the clocks exactly. The colon between the hours and minutes begins to flash and the wording "M1" or "M2" disappears off the display.

Hour/frequency priority switch

Briefly press key (15) to switch between the clock display and the Radio, Cassette or Compact Disc function display for a period of 10 seconds. After this, the selected default display mode reappears.

Power cut

If the radio power supply is cut off (even briefly), the display shows the reading "00 : 00" when reconnected, with flashing figures and fixed colon to indicate that the clock must be re-adjusted.

P4F095L01

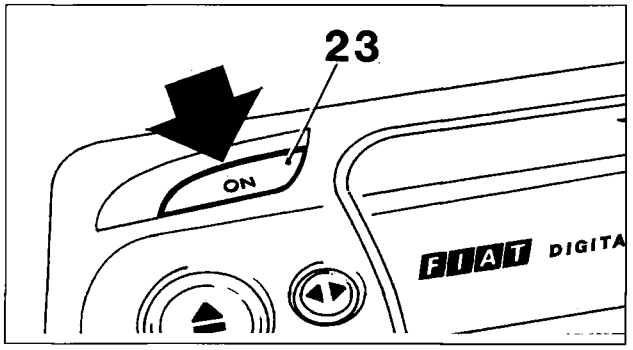

P4F075L01

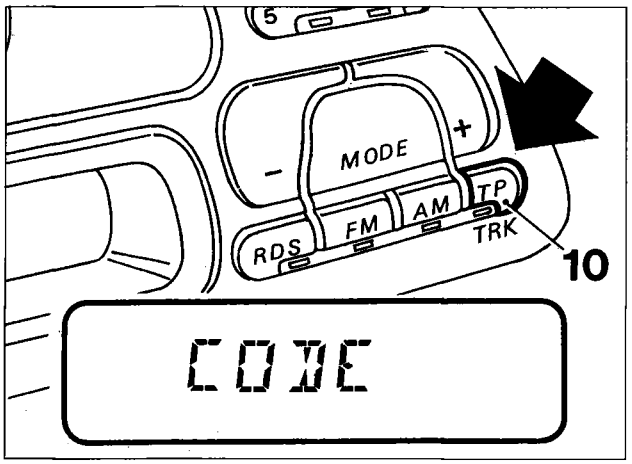

P4F095L02

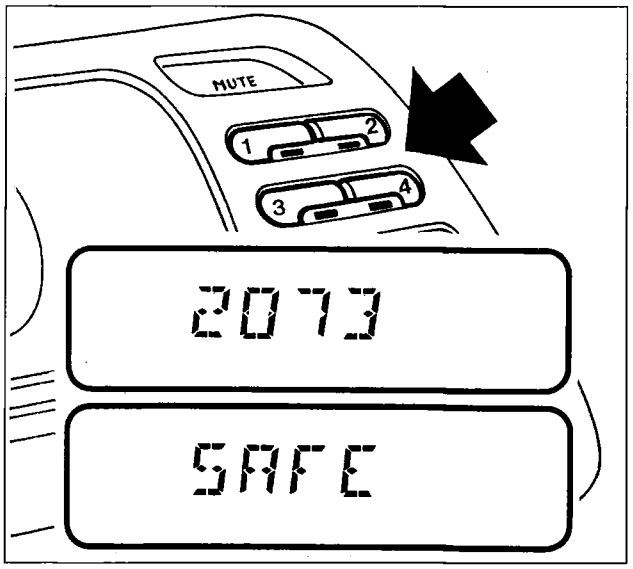

P4F095L03

ANTI-THEFT PROTECTION

The radio is equipped with an anti-theft system consisting of a secret four-figure code. The protection system renders the system unusable once it has been removed from the facia in the case of theft.

Secret code

The secret four-figure code is indicated on the "Security Code card" provided together with the "Fiat Code card" for the vehicle. The secret code must be kept in a safe place (e.g. together with the car documents), **but not on board the car.**

Entering the secret code

Radio code activation is necessary:

a) when the vehicle is delivered to the customer by the dealer;
b) whenever the battery supply is cut off.

First input of secret code

NOTE *Let us imagine that the secret code number given on the "Security Code Card" is 2073.*

- Turn on the radio by pressing the "ON" key (23);
- hold the "TP" key (10) down until the wording "CODE" appears on the display for about 3 seconds;

- press twice on key "1". The display shows the number "2";
- press seven times on key "2". The display shows the number "27";
- press ten times on key "3". The display shows the number "270";
- lastly, press three times on "4". The display shows the number "2703";
- confirm the code number by holding key "TP" (10) down until the wording "SAFE" appears on the display.
- after about 3 seconds, the radio is working and the code is activated.

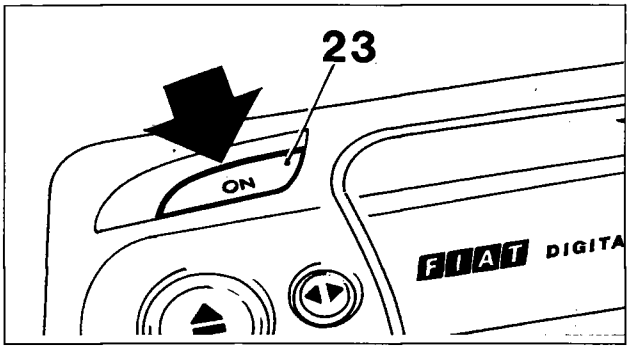

P4F075L01

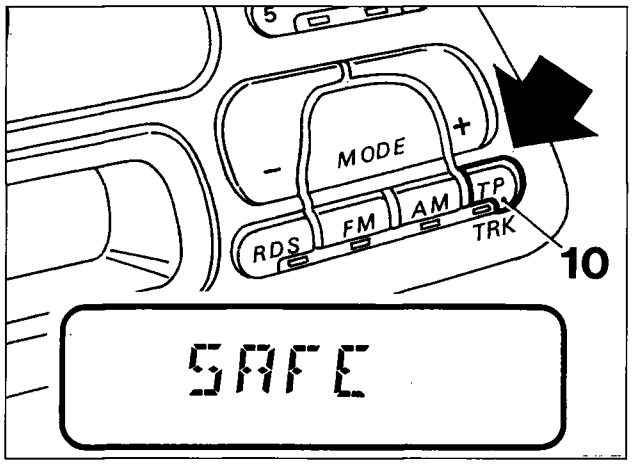

P4F096L01

Number of unsuccessful attempts (on display)	Waiting time (about)
-	21 sec.
1	1.5 min.
2	5.5 min.
3	22 min.
4	1.5 ore
5	6 hours
6	24 hours
7	24 hours

Re-entering the code

Proceed as follows:
- Turn on the radio by pressing the "ON" key (23). The wording "SAFE" appears for about 3 seconds on the display;
- enter the code number by following the procedure adopted during initial code entry;
- confirm the code number by holding down the key "TP" (10) until the wording "SAFE" appears on the display;
- after about 3 seconds, the radio begins to work and the code is activated.

If an incorrect code is entered, the radio stays off and the wording "SAFE" appears permanently on the display.

As a further deterrent against theft, the system counters repeated attempts to enter the code by making the waiting time between one attempt and another longer and longer.

During these intervals, the radio function is locked until the wording "SAFE" disappears from the display and the number of incorrect attempts appears in its place. The table shown alongside indicates the waiting time between individual attempts

Elimination of anti-theft protection

It is possible to eliminate the anti-theft protection by de-activating the radio code:
- turn on the radio by pressing the "ON" key (23);
- hold down the "TP" key (10) until the wording "SAFE" appears on the display for about 3 seconds;
- enter the code number as described previously (see previous page);
- confirm the code number by holding down the "TP" key (10) until the wording "CODE" appears on the display;
- after about 3 seconds the radio begins to work and the code is de-activated.

If an incorrect code is entered, the wording "SAFE" appears on the display. In this case, retry and remember to observe the waiting periods between individual attempts.

Checking code activation status

To check whether the radio code is activated, proceed as follows:
- turn on the radio by pressing the "ON" key (23);
- press key "TP" (10) until wording appears on the display;
- if the wording "SAFE" appears, the code is activated. If the wording "CODE" appears, the code is not activated. When the radio is turned off and on, the wording "SAFE" or "CODE" disappears.

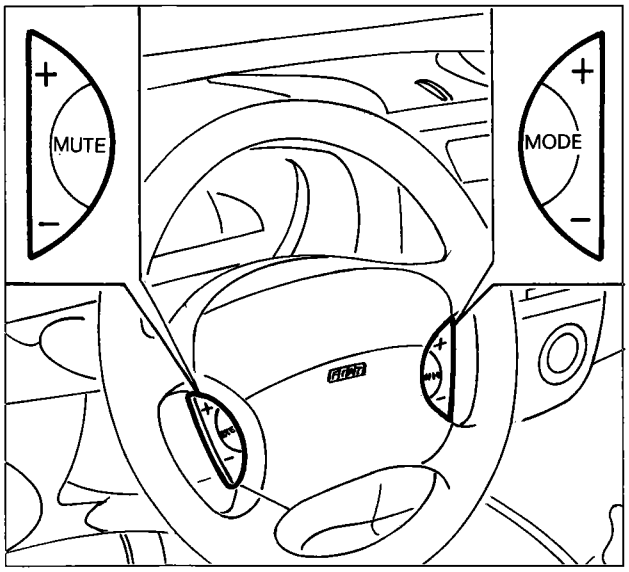

STEERING WHEEL CONTROLS

Available as options for radio AD 185H

Left-hand side + and -: volume increase or decrease

MUTE: mute function

Right side + and -: broadcast station search

MODE: select Radio, Cassette, CD function

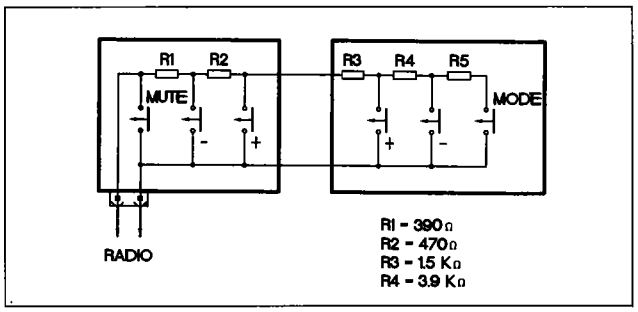

TECHNICAL DATA

FRONT SPEAKER SPECIFICATIONS

	ON DOOR		TWEETER
	HLX	SX - ELX	
Passband	80-15000 Hz	100-15000 Hz	2500-20000 Hz
Resonance frequency	80±13 Hz	100±16 Hz	2500±400 Hz
Nominal impedance	4±20% Ω	3±20% Ω	8±20% Ω
Induction	9400±7% T	8400±7% T	10600±7% T
Power RMS (DIN 45573)	18 W	12 W	30 W

REAR SPEAKER SPECIFICATIONS

	MAREA	MAREA Weekend
Passband	80-18000 Hz	115-20000 Hz
Resonance frequency	80±13 Hz	115±22 Hz
Nominal impedance	4±20% Ω	8±20% Ω
Induction	8400±7% T	9700±7% T
Power RMS (DIN 45573)	18 W	12 W

Copyright Fiat Auto

55. LOCATION OF RADIO SYSTEM COMPONENTS

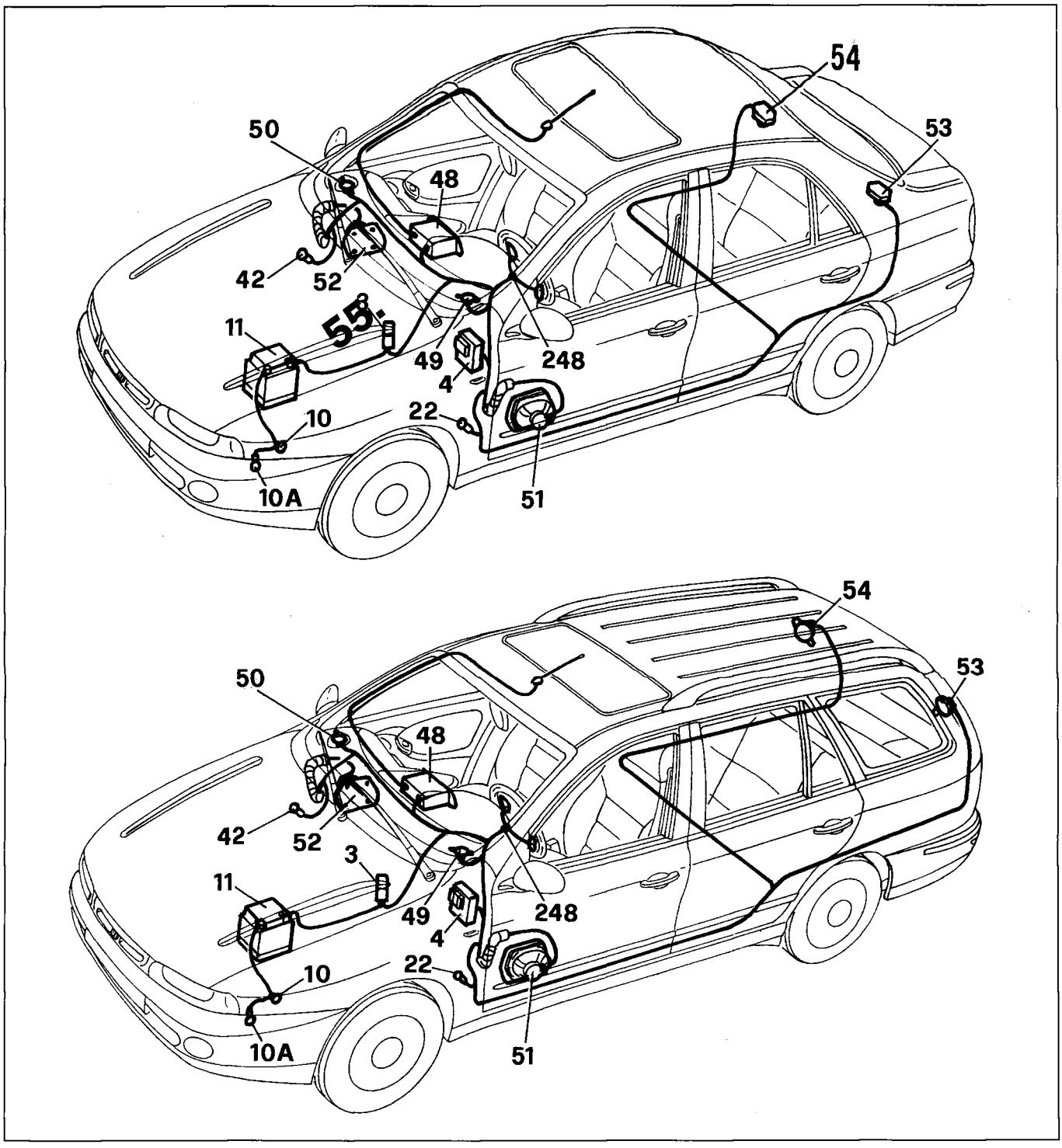

P4F22AL01

3. Power fuse box
4. Junction unit
10. Battery earth on body shell
10A. Battery earth on engine
11. Battery
22. Left hand facia earth
42. Right hand facia earth
48. Radio with clock
49. Left front loudspeaker (tweeter)
50. Right front speaker (tweeter)
51. Speaker on left hand front door
52. Speaker on right hand front door
53. Left hand rear speaker
54. Right hand rear speaker
248. Radio controls on steering wheel

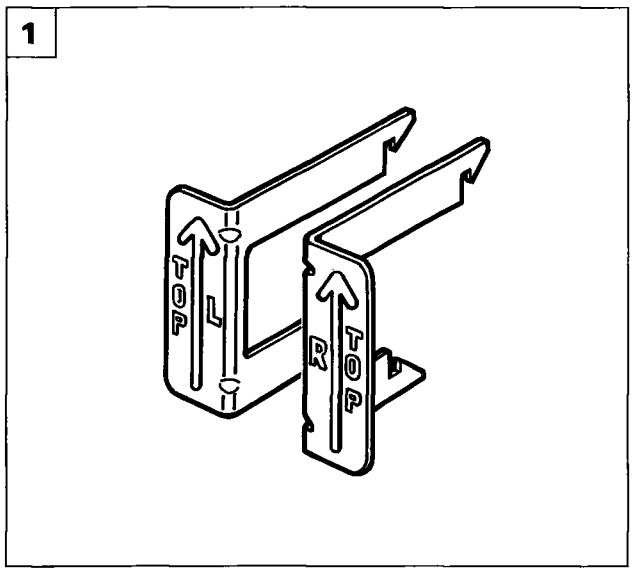

P4F099L01

REMOVING RADIO MODEL AD 185 M

1. Tool 1860897000 used to remove the radio is made up of a left hand part and a right hand part. These are marked R and L respectively.

NOTE *The correct direction of use of each part is indicated by an arrow.*

ft is advisable to work from the passenger side to facilitate removal operations.

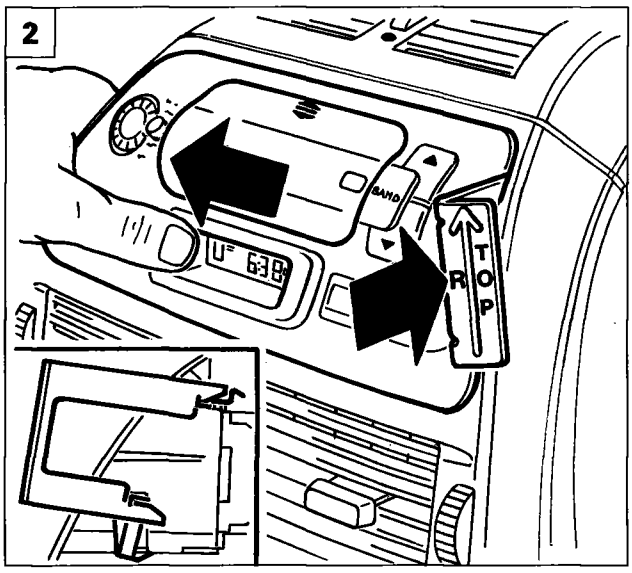

P4F099L02

2. Move the radio to the left as shown in the figure. Then insert right hand part (R) of tool 1860897000 with care until it clicks home onto the radio clips (see box).

3. Use right hand part (R) of the above tool to remove the right hand side of the radio gently in the arrowed direction.

4. Move the radio to the right, as shown in the figure. Then fit left hand part (L) of tool 1860897000 with care until it clicks home on the radio clips.

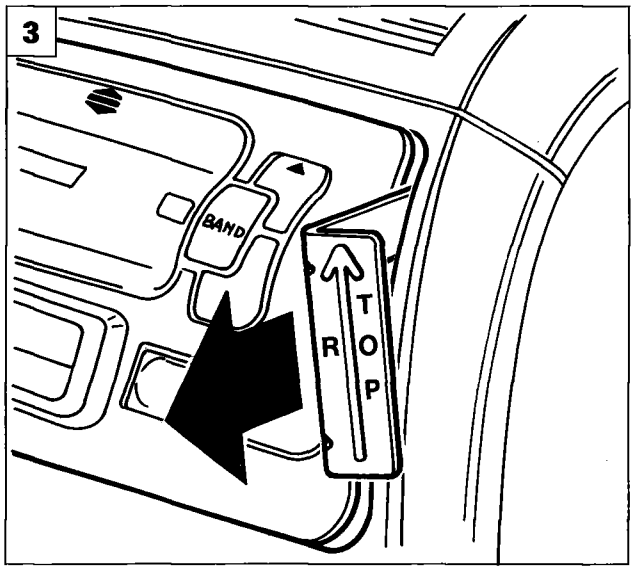

P4F099L03

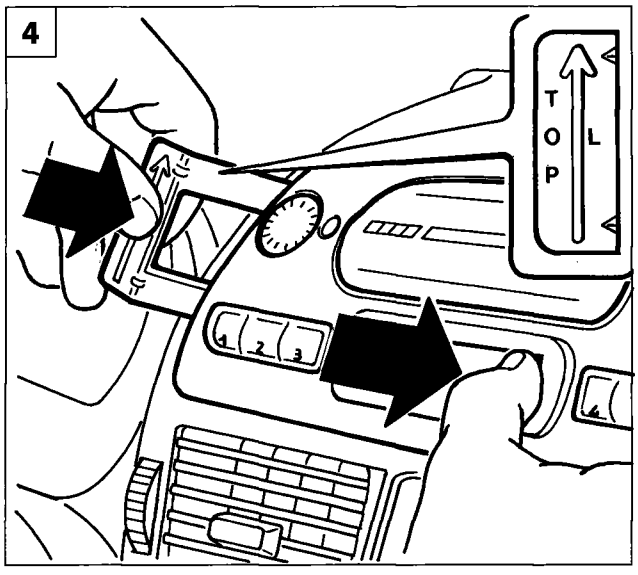

P4F099L04

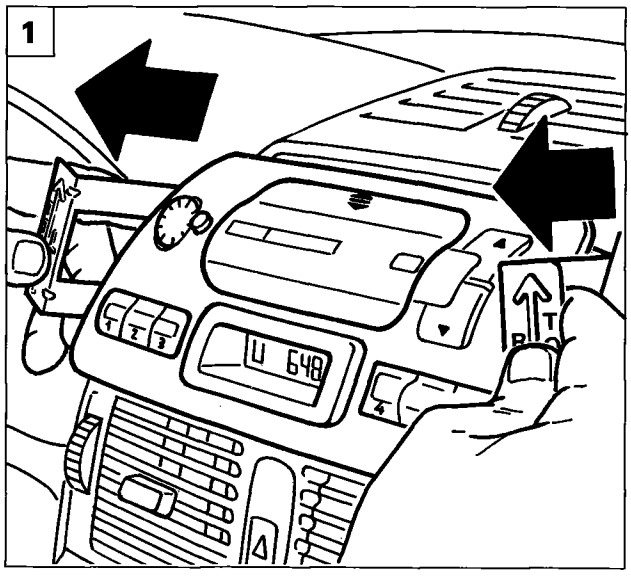

P4F100L01

1. Grasp both parts of tool 1860897000 and remove the radio partly, then disengage both parts of the above tool from the radio.

Do NOT remove the radio by pulling from the cassette slot but only using both parts of tool 1860897000 and following the procedure described previously.

2. Protect the instrument facia area beneath the radio with a cloth as shown in the figure.
3. Remove the radio completely: disconnect connection D of the aerial lead and connectors A and B by proceeding as follows: push connectors A and B toward the radio and press retaining clip C indicated in the box. Then remove the radio from the car. If the rubber terminal (1) of locating pin (2) remains inside the facia beam, remove and fit back on the pin.

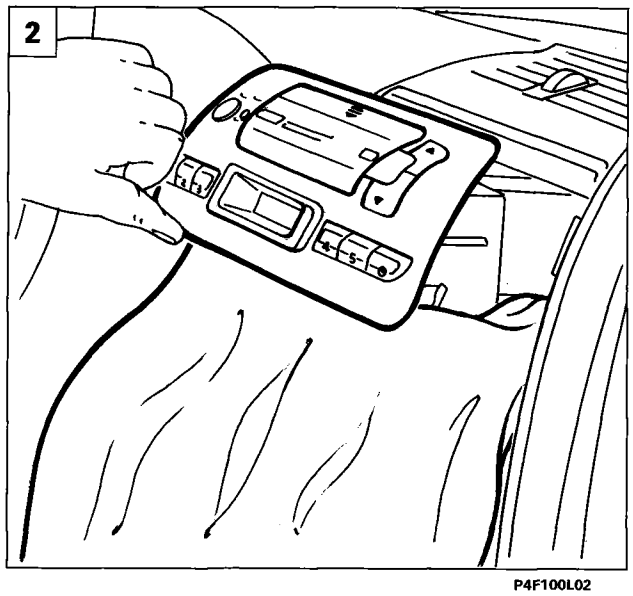

P4F100L02

REMOVING RADIO MODEL AD 185 H

4. Follow the procedure described for removing radio model AD 185 M: in addition to disconnecting connectors A and B, disconnect the connector for the CD and steering wheel (identifiable by the three different colours). Undo the three retaining clips shown in the box at the same time.

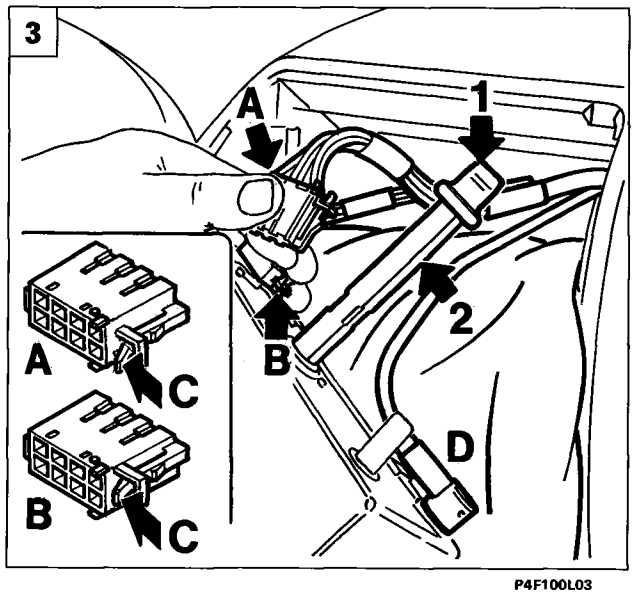

P4F100L03

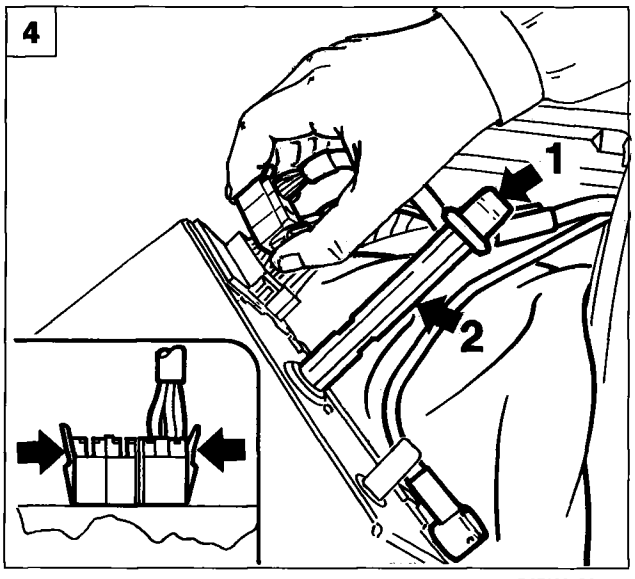

P4F100L04

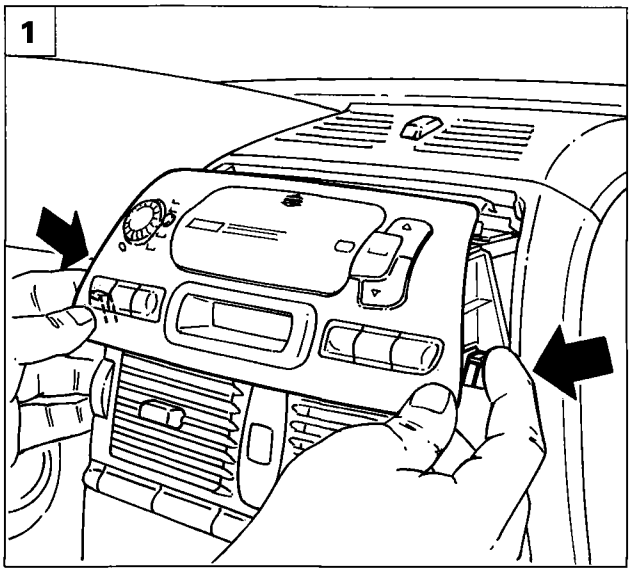

P4F101L01

REFITTING CAR RADIO

1. To refit, reverse removal instructions: make sure that the rubber terminal is fitted correctly on the locating pin. When fitting the radio in its housing, arrange a cloth on the panel when connecting the connectors and ensure the locating pin fits correctly into its seat on the facia. Slowly insert the radio in its seat, making sure both lower clips are pressed in while inserting the radio in the slot in order not to scratch the instrument facia panel.

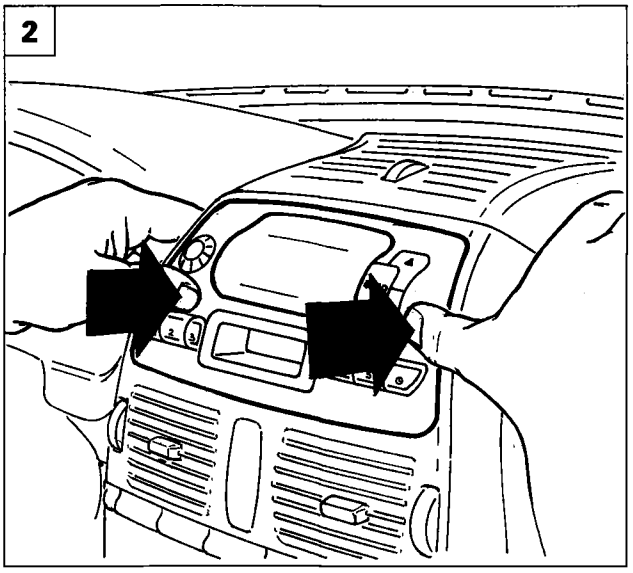

P4F101L02

2. Now press the radio panel fully home as shown in the figure until the retaining clips click home. Do not force the control keys

REPLACING CAR RADIO

3. If the radio is faulty or the fuse shown in the figure blows, DO NOT ATTEMPT TO REPAIR OR REPLACE, but proceed as follows.

4. Unscrew the locating pin and secure as shown in the figure. Then send the radio assembly to the supplier.

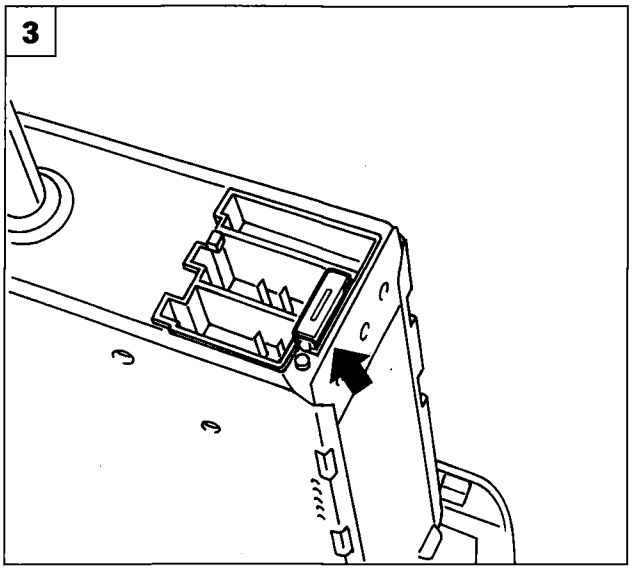

P4F101L03

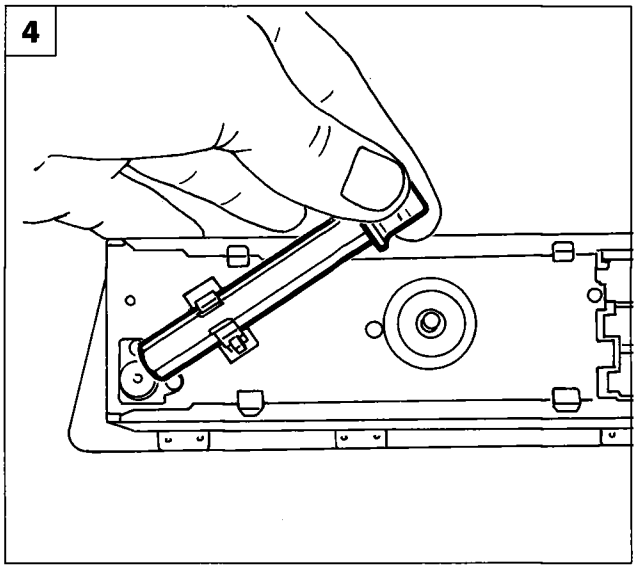

P4F101L04

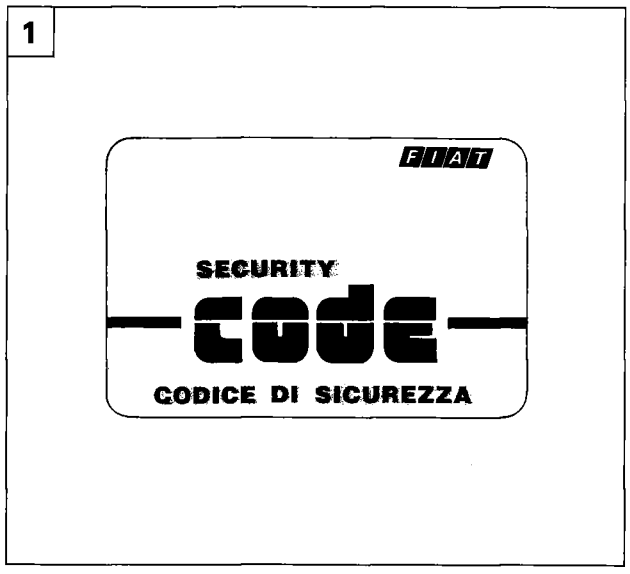

P4F102L01

1. For the model AD 185 H, take the Security Code Card from the old radio from the Fiat Card envelope and replace it with the card attached to the new radio. Put the old Code Card with the old radio.

2. Take a new radio, then take out the locating pin complete with rubber terminal and screw into the threaded seat on the botom of the radio. Fit as described on the previous page.

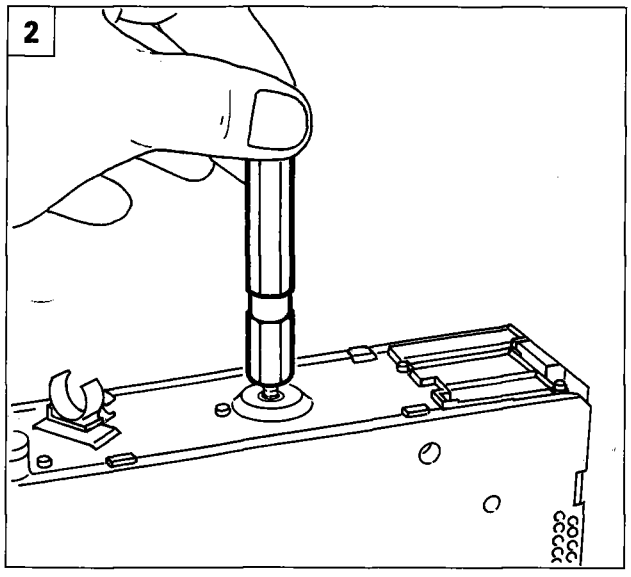

P4F102L02

OPENING/CLOSURE OF CASSETTE SLOT ACCESS FLAP

3. The cassette slot access flap opens differently in both cases:

- AD185M: push from up to down on the point indicated in the figure until the flap clicks open.

- AD185H: press key indicated to open the flap automatically.

4. To close the flap, push lightly on the point shown in the figure until the flap clicks shut.

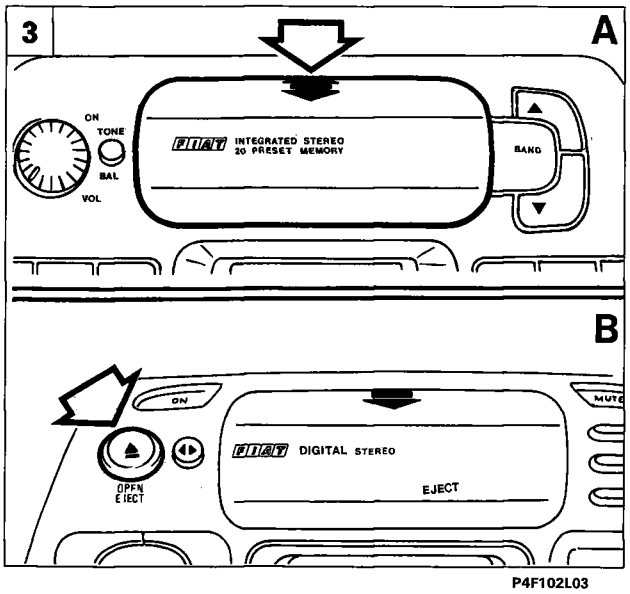

P4F102L03

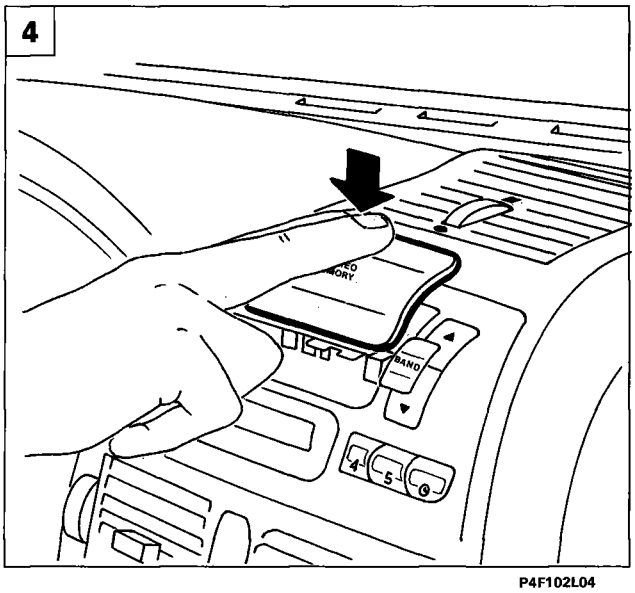

P4F102L04

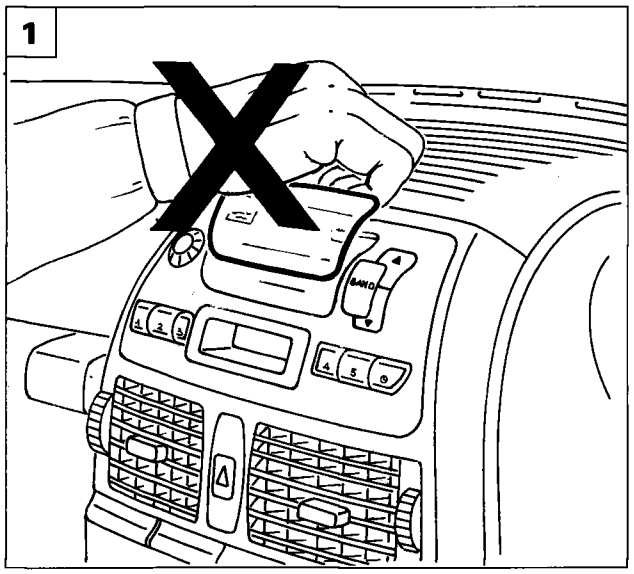

P4F103L01

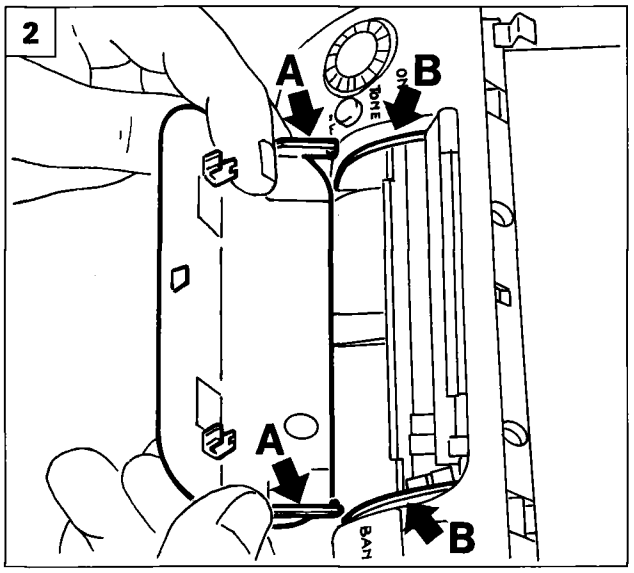

P4F103L02

1. DO NOT CLOSE THE CASSETTE SLOT ACCESS FLAP AS SHOWN IN THE FIGURE, because this would cause the flap itself to become detached and damage to the guides and fastenings.

Fitting cassette slot access flap

If the flap comes off, but the guides and fastenings are not damaged, fit as described below (for greater clarity, the operations are shown with the radio removed from its housing):

2. Fit lower flap guides A in the slide grooves on the radio.

3. Turn the flap so that the clips C on the lower face of the flap are aligned with rotation arm pins D.

4. Press both sides of the flap simultaneously between thumb and forefinger in order to close.

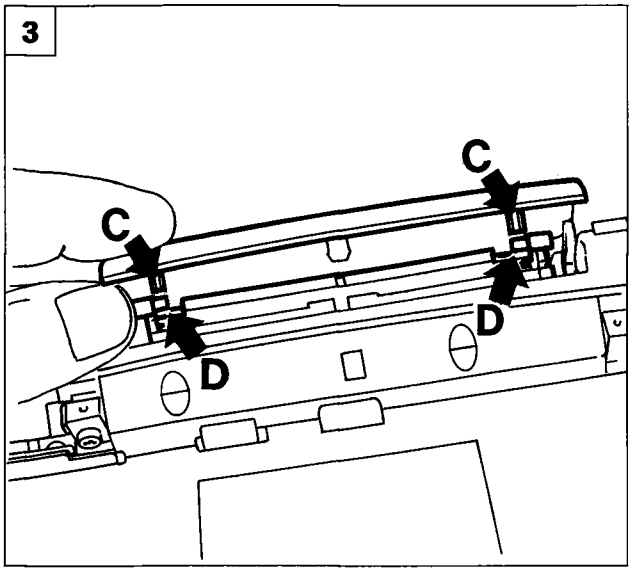

P4F103L03

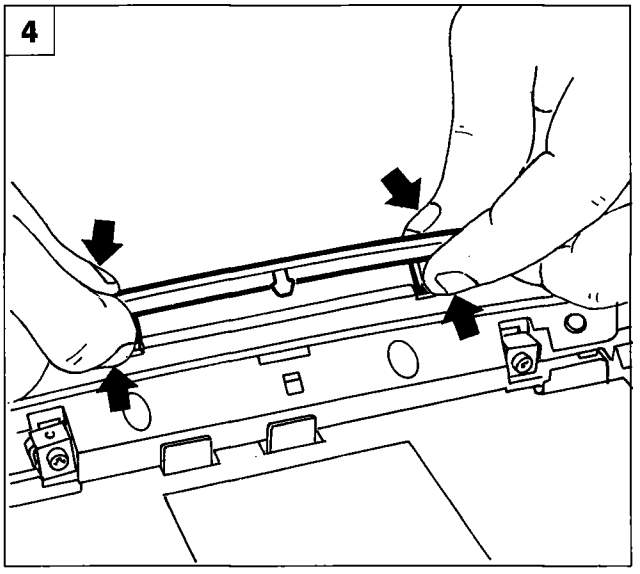

P4F103L04

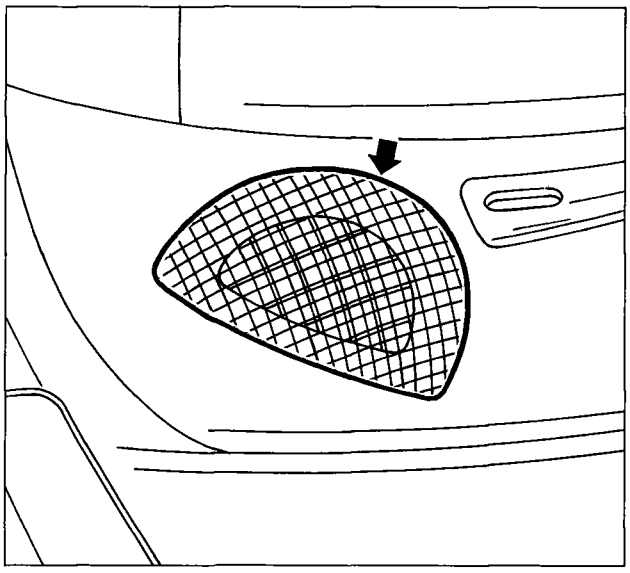

P4F104L01

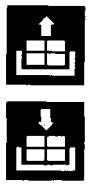

REMOVING-REFITTING SPEAKERS

Speakers on facia

- Proceed as shown to remove the protective grille from the instrument facia. Prise up by inserting a screwdriver at the point indicated by the arrow.

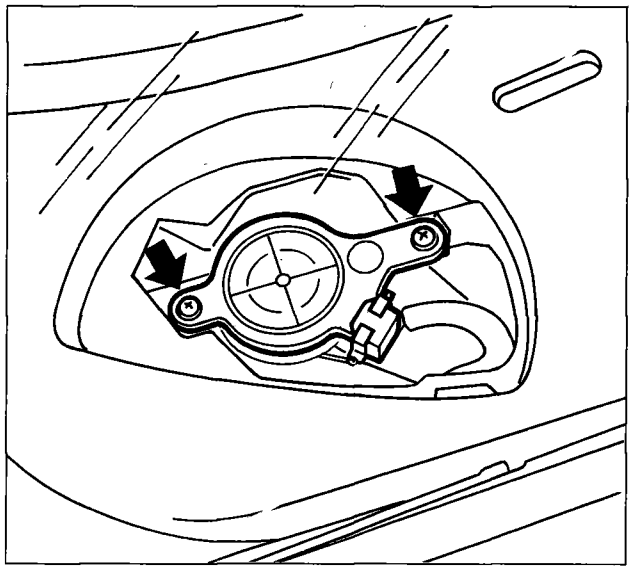

P4F104L02

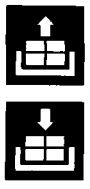

- Unscrew the bolts fastening the speaker to the facia.

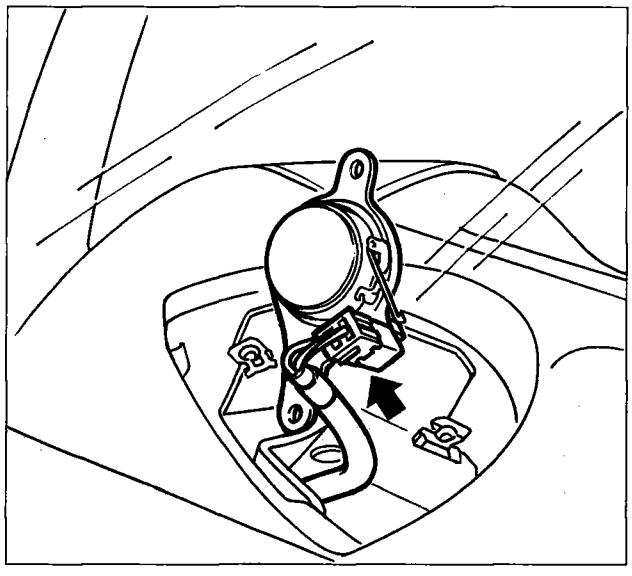

P4F104L03

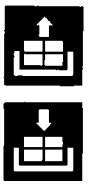

- Disconnect electrical connection and remove the speaker from the vehicle.

NOTE *Reverse order of removal operations to refit.*

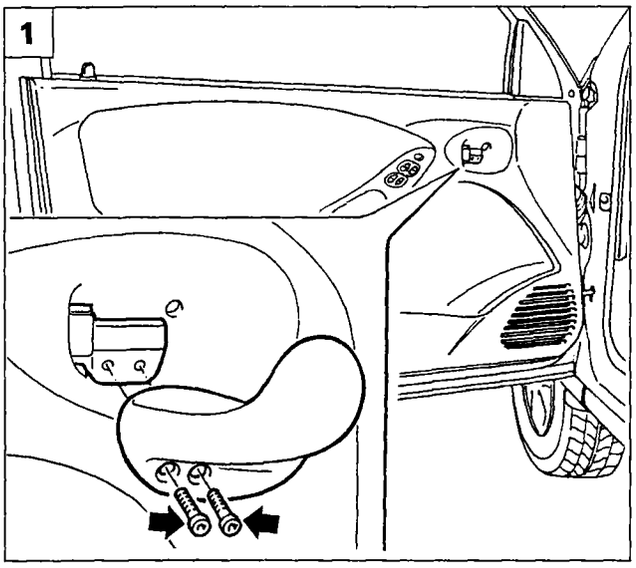

P4F105L06

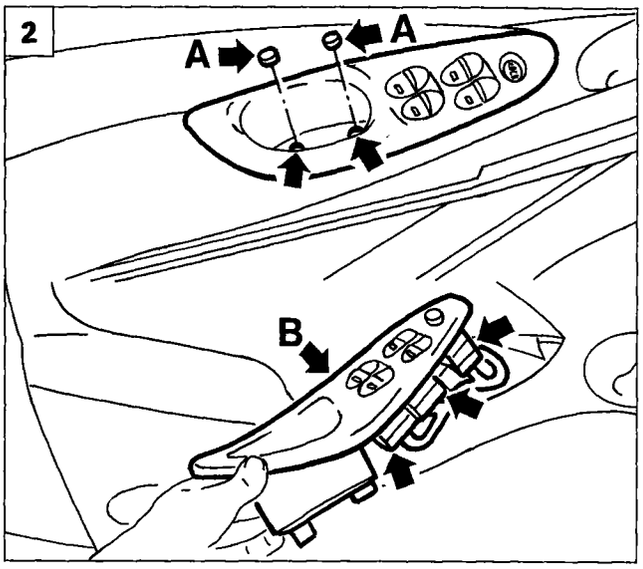

P4F105L07

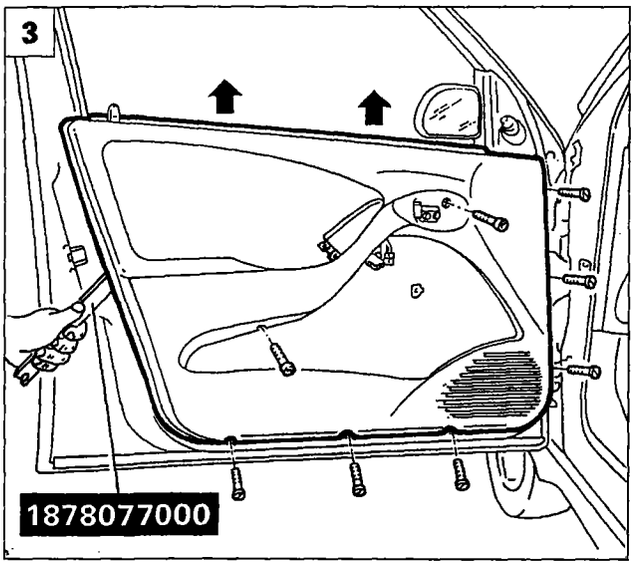

P4F105L08

Speakers on front door

1. Remove the door opening control lever by unscrewing the retaining screws shown.
2. Take off covers (A) from the window pushbutton unit and then unscrew the screws beneath.
   Prise up the electric window pushbutton unit (B) and disconnect the electrical connections.
3. Remove the door panel by unscrewing the retaining screws shown and undoing retaining studs with the aid of tool 1878077000.
4. Pull away the door lining as much as necessary, then unscrew the screws retaining the speaker assembly and remove from the vehicle.
5. Separate the protective grille from the speaker by undoing the retaining tabs.

NOTE *Reverse order of removal operations to refit.*

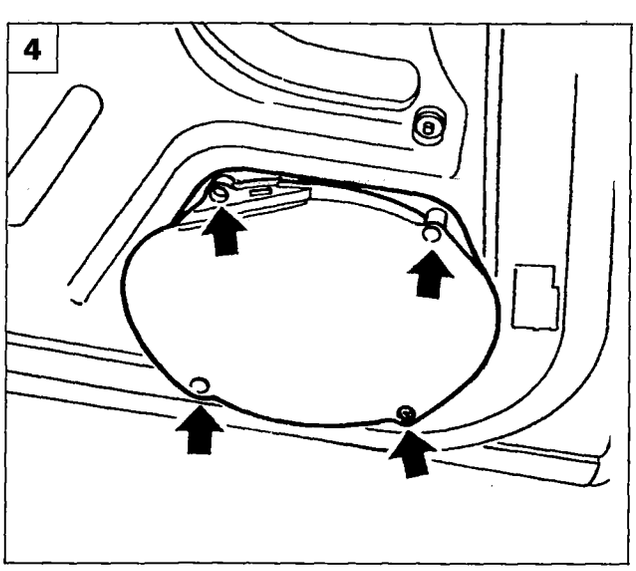

P4F105L09

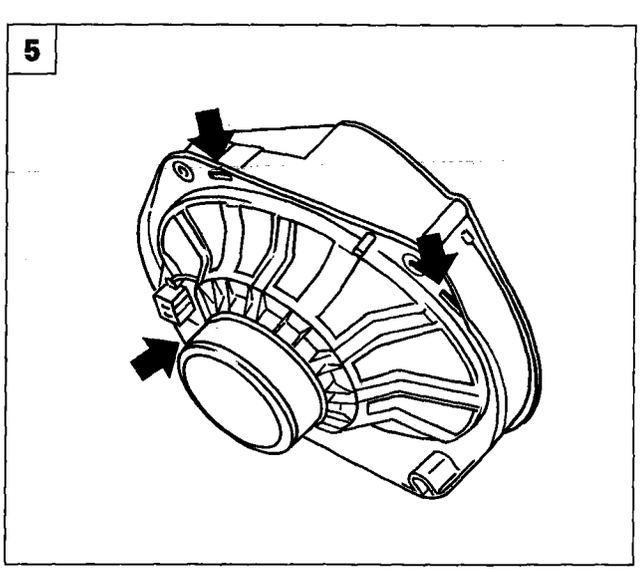

P4F105L05

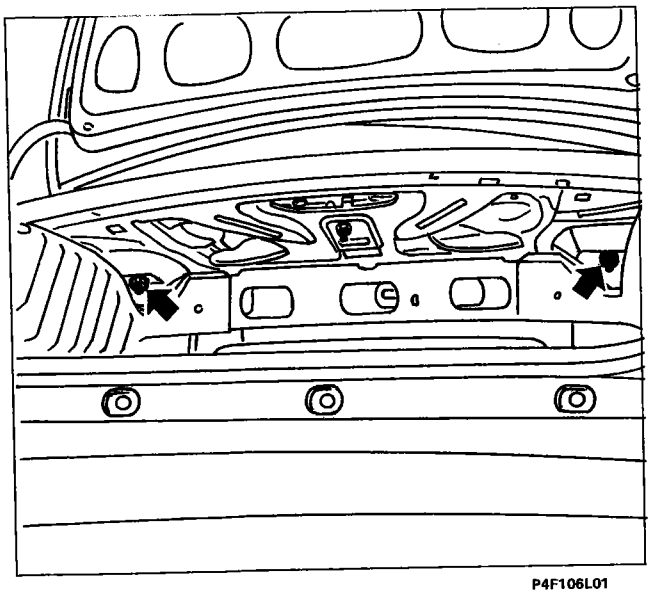
P4F106L01

Rear speakers on parcel rack

- Open the boot lid.
- Unscrew nut for the relevant speaker.

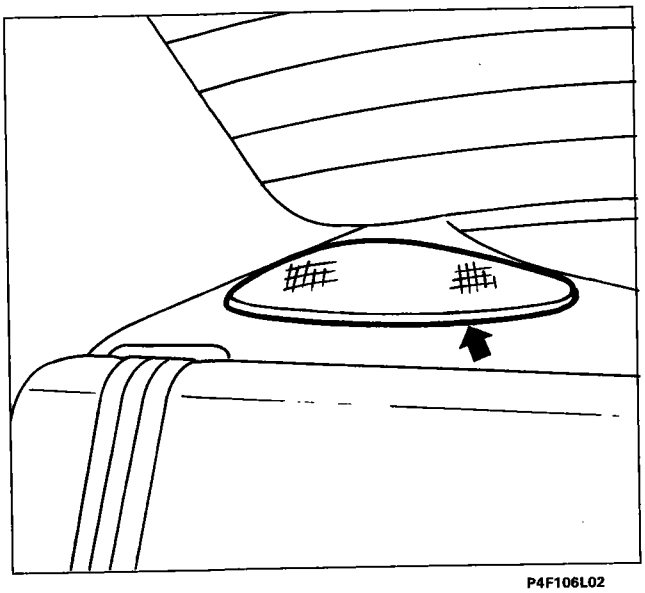
P4F106L02

- Working from inside the vehicle, prise up the speaker panel from the parcel rack.

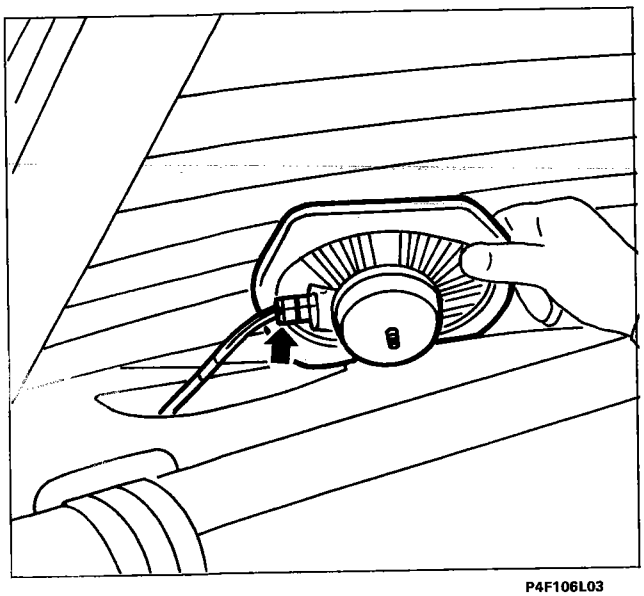
P4F106L03

- Slightly raise the speaker, disconnect the connector and remove from the parcel rack.

NOTE *Reverse order of removal operations to refit.*

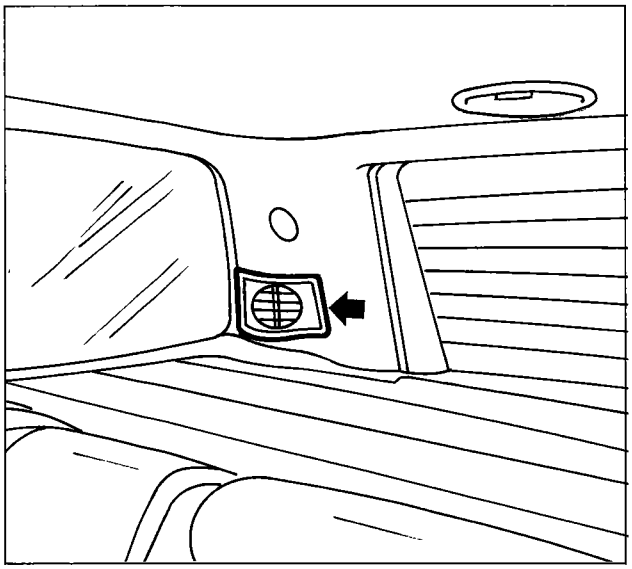

P4F107L01

Rear speakers on pillars

- Use a screwdriver to prise up the panel covering the rear speaker.

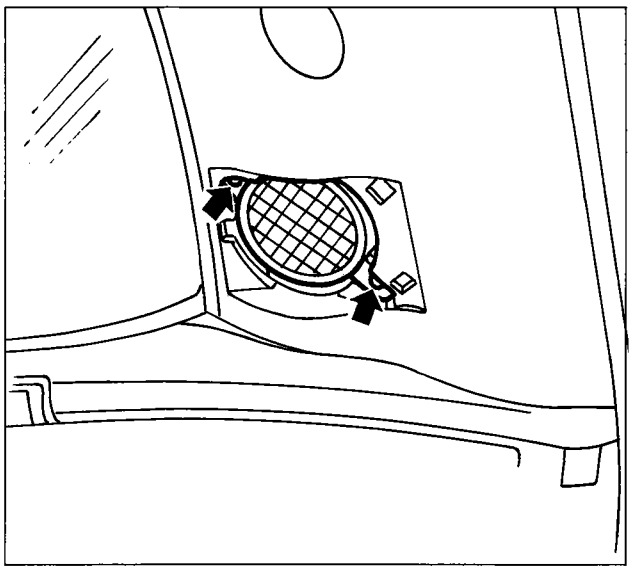

P4F107L02

- Unscrew the bolts fastening the rear speaker and remove slightly.

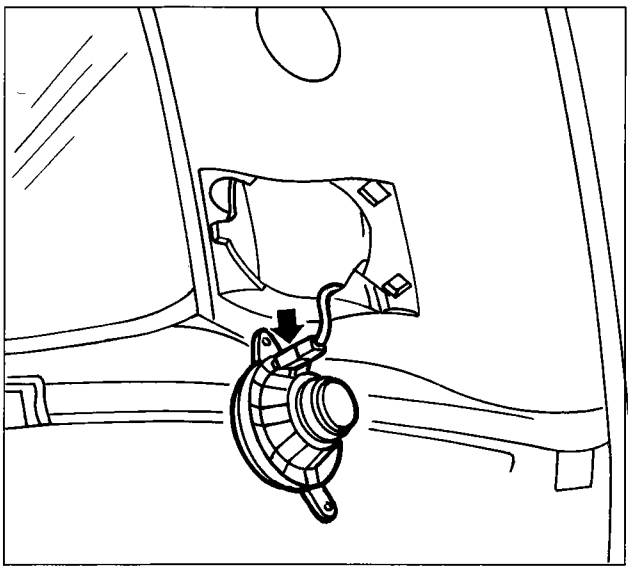

P4F107L03

- Disconnect connector and remove rear speaker.

NOTE *Reverse order of removal operations to refit.*

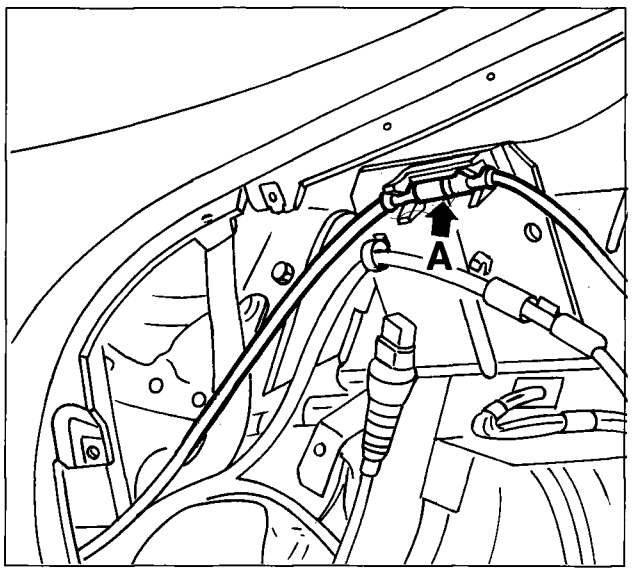

P4F108L01

REMOVING-REFITTING AERIAL LEAD CAR RADIO

- Remove the radio as described on the previous pages.
- Remove the passenger side glove compartment as described in Group 70 during facia trim removal.
- Remove the right front pillar trim, sun blinds, right front passenger grab handle and sliding roof opening seal as described in Group 70.
- Remove the front courtesy light as described in the relevant paragraph.
- Working within the compartment left free by the glove compartment, disconnect electrical connection (A) of the aerial lead from the retaining clip.

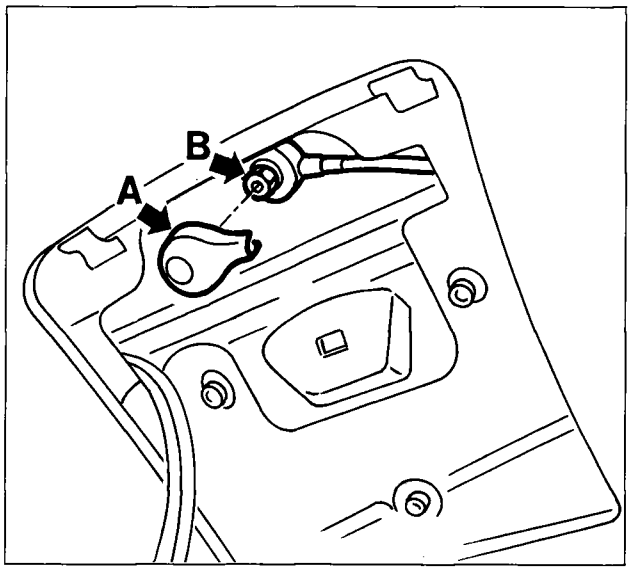

P4F108L02

- Working inside the courtesy light compartment, prise up aerial lead terminal cover (A).
  Unscrew nut (B) and remove the aerial lead terminal.

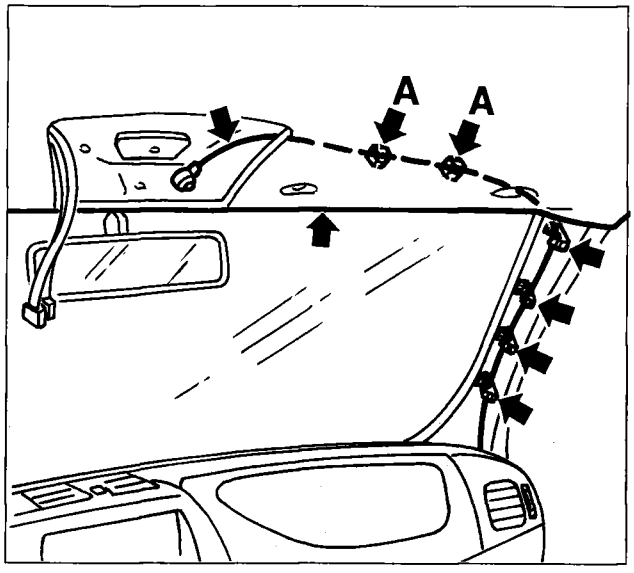

P4F108L03

- Slightly lower the right front end of the roof panel lining and disconnect the aerial lead from retainers (A), then disconnect from the remaining retainers along the front pillar and remove.

NOTE *Reverse order of removal operations to refit.*

INTRODUCTION

The Fiat CODE system consists of:
- three electronic keys containing a secret code;;
- one FIAT CODE control unit;
- special antenna on the ignition switch;
- injection ECU with one serial line communicating with the FIAT CODE control unit (●);
- card with secret code for emergency procedure.

Fiat CODE ECU functions are as follows:
- recognise insertion and turning of key in ignition;
- emit an electromagnetic field to power and activate the key TRANSPONDER (code emitter);
- receive secret code issued by key;
- store up to 8 keys using the same number of secret codes;
- manage code checking/processing;
- control a single-wire bidirectional serial link with the injection ECU (●);
- control a test warning light (LED) located on the dashboard.

LOCATION OF SYSTEM COMPONENTS ON VEHICLE

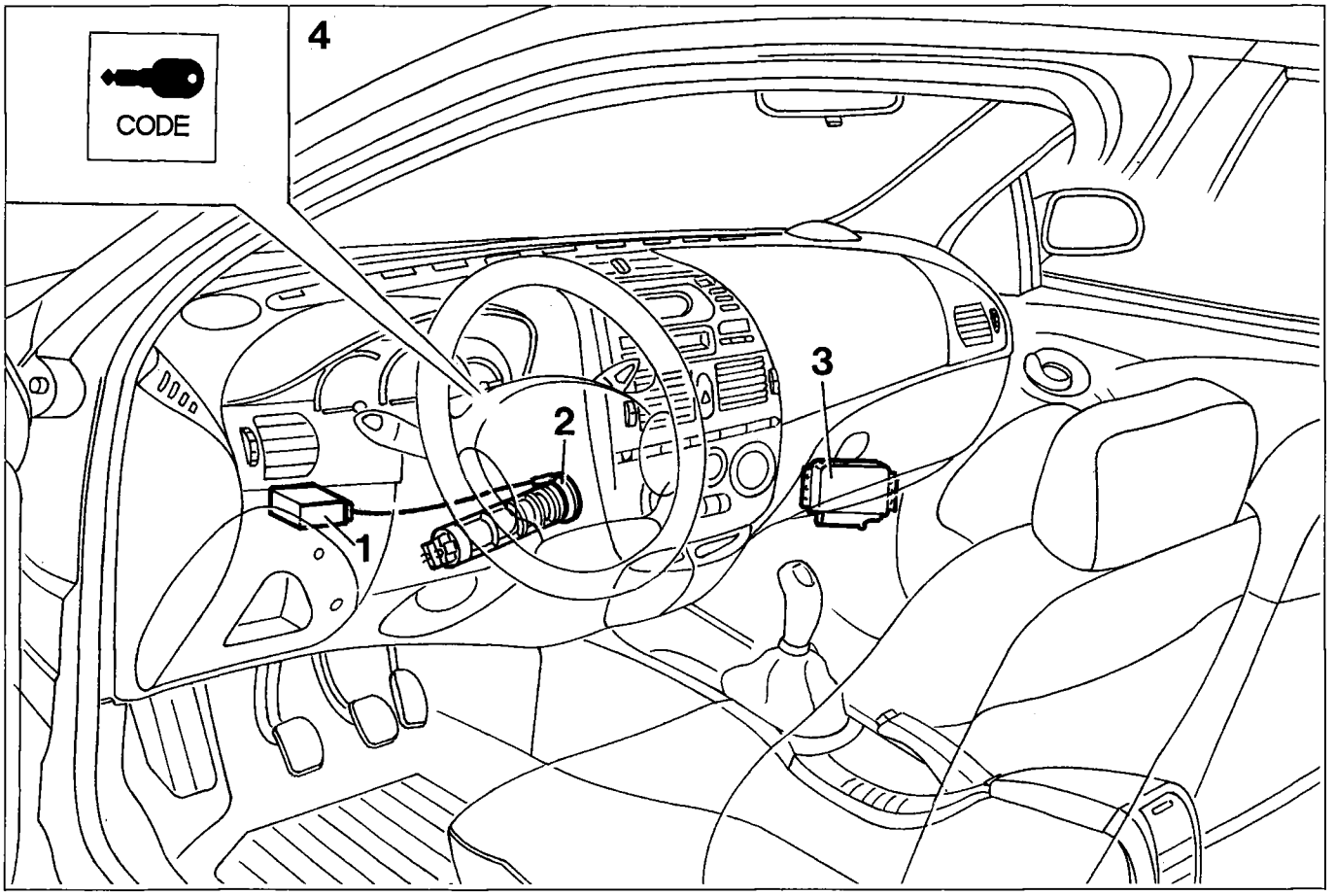

P4F24AL01

1. *FIAT CODE control unit*
2. *Ignition switch with aerial*
3. *Injection/ignition control unit (●) (located in the engine bay for 1370 and 1581 engines)*
4. *Warning light on control panel*

(●) **NOTE** *On the 1910 TD version, the Fiat CODE system is not connected to the injection control unit but to a special electronic device in the engine stop solendoid valve.*

55.

Electronic keys

The key grip contains a Transponder. This electronic device (NOT supplied by the battery) contains a code and transmits information through the air.
When the key is inserted in the ignition and the Transponder is energised by radio waves received via the aerial, the Transponder responds by emitting a code.
Three keys are provided with the vehicle:
- n° 1 electronic key (MASTER KEY) in bordeaux red;
- n.2 electronic keys (MAIN KEYS) in blue

Each key contains a Transponder with a secret code. The RED contains the Master Code and must be used SOLELY for the key memorisation process.

The MASTER key code is the Master Code saved in the electronic injection control unit and electronic key ECU. This represents an insoluble link between the electronic injection control unit and the MASTER key. If the MASTER key is lost or damaged, no further new keys may be saved. If the electronic key ECU becomes faulty and the MASTER key is not available, the electronic key and electronic injection ECUs must be replaced.

The vehicle owner is advised to observe the following instructions SCRUPOLOUSLY:

- *The MASTER key must be kept in a safe place (not in car);*
- *The MASTER key must be used only for saving new keys;*
- *the card with the secret code must not be left in the car in case the car is stolen, but must nevertheless be available for the emergency start-up procedure.*
- *The MASTER key is proof of vehicle ownership. If the car is sold, the MASTER key and the Code Card must be transferred to the new owner.*

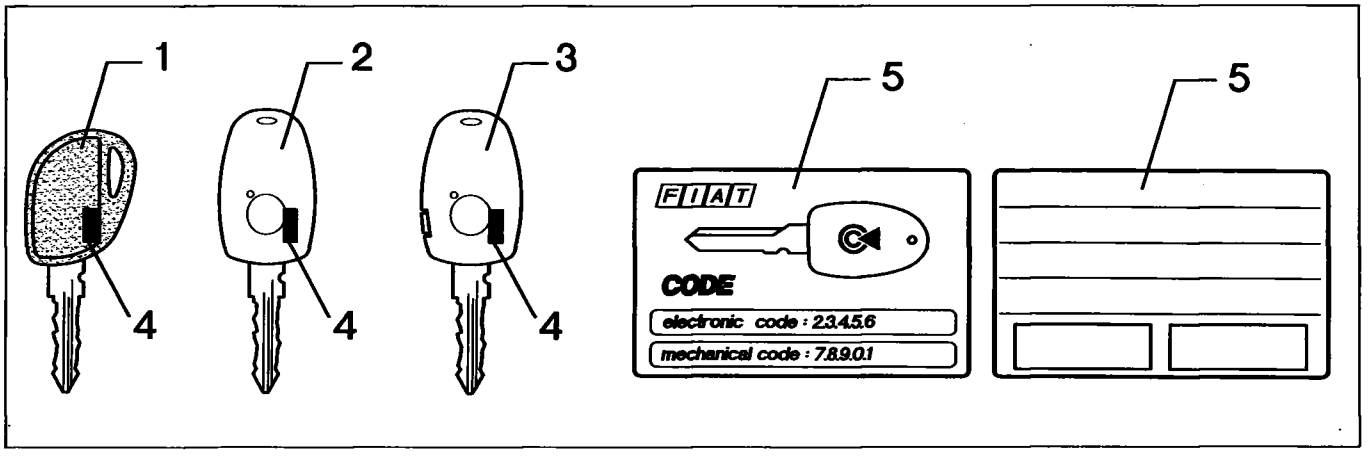

P4F25AL01

1. *MASTER key (Bordeaux)*
2. *Main key (blue)*
3. *Main key with remote control (blue)*
4. *Transponder*
5. *Code card with secret code*

NOTE *Key (3) is supplied instead of key (2) for vehicles with remote control.*

Code Card

This card contains:
- electronic Code; a 5-figure code for the emergency start-up using a Fiat Lancia Tester or accelerator pedal.
- mechanical Code: code used to copy the milling on the key if necessary

The other side of the card contains two spaces for labels bearing car alarm remote control codes (passwords) (see box indicated under "Alarms").

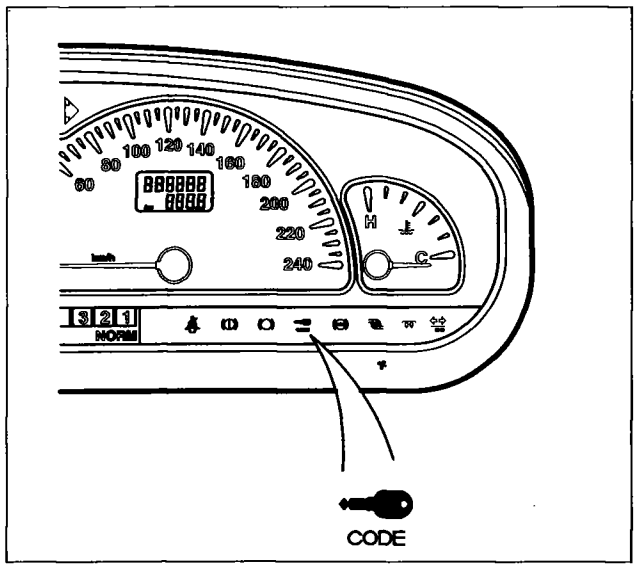

P4F26AL01

FIAT CODE warning light

The CODE warning light is located on the instrument panel and controled by the Fiat CODE centrol unit. The light may indicate one of the following conditions when the ignition key is turned to **MAR**:
- **ON briefly (0.7s)** and then **OFF:** key recognised, system operating correctly;
- **FLASHING:** neither injection control unit or Fiat CODE have codes stored (blank system). Refer to paragraph entitled "Manual fault diagnosis" in the "Fiat CODE" publication, print no. 506.656 for information on the different flashing modes;
- **ON:** if the warning light comes on permanently with the ignition key turned to **MAR**, one of the following anomalies is present:

a. code not recognised by the Fiat CODE ECU;
b. serial line not connected or the injection and Fiat CODE control units have not succeeded in communicating;
c. code re-saving procedure not carried out correctly.

NOTE *For more information on the Fiat CODE system, refer to the "Fiat CODE" publication, print no. 506.656, where the following points are explained:*
- *System description*
- *Code storage*
- *System fault diagnosis*
- *Component replacement*

For convenience, see overleaf for a brief version of the **CODE STORAGE PROCEDURE** and the **EMERGENCY START PROCEDURE.**

PROCEDURE FOR STORING CODES ON A BLANK SYSTEM

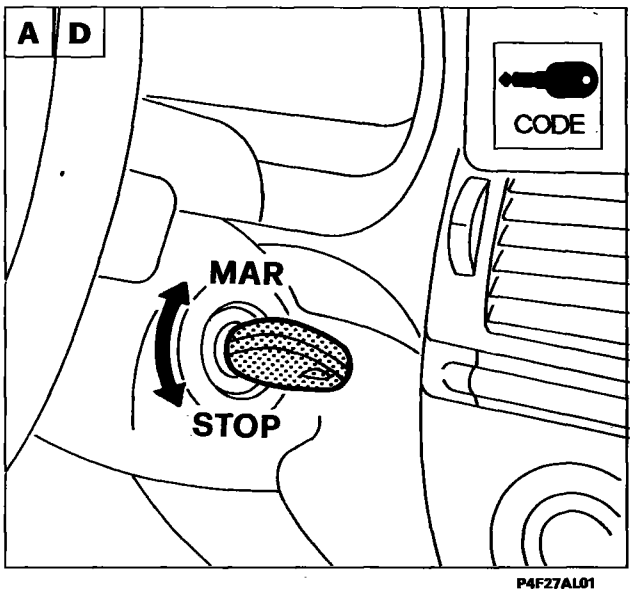

A Insert the MASTER key in the ignition
Turn the MASTER key to MAR and turn back to STOP as soon as the Fiat CODE warning light goes off.

B Within 10 seconds:
Remove the MASTER key from the ignition and insert a main key in the ignition. Turn the key to MAR. When the Fiat CODE warning light goes off, turn the key to STOP.

C Within 10 seconds:
Remove the key from the ignition, insert a second main key in the ignition.
Turn the key to MAR. When the Fiat CODE warning light goes off, turn the key to STOP.

D Within 10 seconds:
Remove the key from the ignition, fit the MASTER key in the ignition
Turn the key to MAR. As soon as the Fiat CODE light goes off, return to STOP.
THE CODES ARE NOT STORED IN THE FIAT CODE CONTROL UNIT

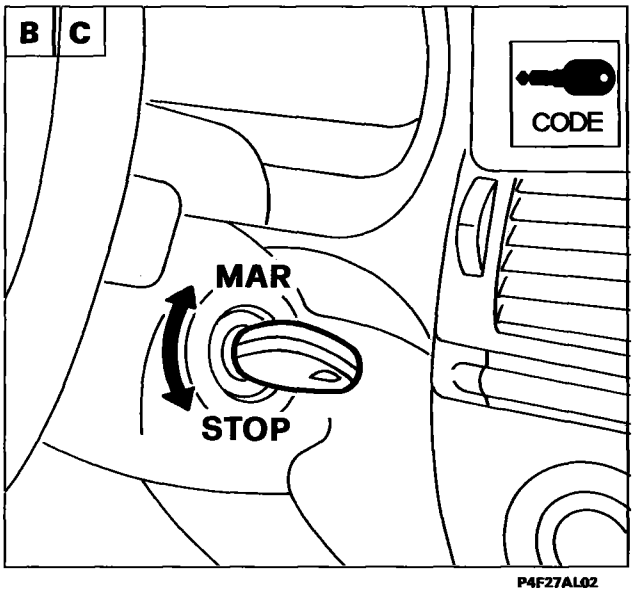

E Enter any of the stored keys and turn to MAR. The Fiat CODE warning light will go off after 0.7 seconds.
Wait 2 seconds. if the Fiat CODE warning light stays off, the code storage procedure has been successful and the MASTER key code has been stored in the injection ECU.
If the warning light begins to flash again (1.6 Hz), the code storage procedure has not been carried out properly.

If the procedure has been successful for any reason:
- Turn the key to MAR for more than 2 seconds and turn the key to STOP for more than 10 seconds.
- Repeat the procedure from the beginning and fit all the keys.

CODE RE-STORAGE PROCEDURE

This procedure is similar to the previous procedure: main keys are fitted in between two insertions of the MASTER key (*see steps from A to D*). During the sequence, new and old main keys are inserted. If the main keys stored previously are not inserted again, their codes are deleted from the control unit memory. Step E does not have to be carried out in this case because the MASTER CODE is already stored in the injection control unit.

EMERGENCY START-UP PROCEDURE

The emergency start-up procedure can be used to start the engine whenever the Fiat CODE system is not working properly (FIAT CODE control unit faulty, keys unusable etc.). The emergency procedure can be activated only if the electronic injection control unit is in *"prohibit engine management"* mode. This procedure may be carried out using a Fiat/Lancia tester or by means of the accelerator pedal. This operation is used to start the engine and drive the vehicle to the nearest authorised workshop in order to repair the fault.

Emergency start-up using a Fiat/Lancia Tester

This procedure is activated by entering a 5-figure code (ELECTRONIC CODE) shown on the Code Card by means of the Fiat Lancia Tester keypad.
After emergency start-up, the injection control unit returns to the start-up lock position when the key is turned to STOP.

Emergency start-up by means of the accelerator pedal
(Procedure not used for the 1910 TD version).

This procedure involves operating the accelerator pedal in order to send an electronic code to the injection control unit by means of a signal the unit reads from the throttle valve potentiometer (petrol versions) or the accelerator pedal (2387 TD).
Carry out the following operations in order:

1. Read the 5-figure electronic code off the Code Card (Electronic Card).
2. Turn the key to MAR: press the accelerator pedal and hold down. The injection system fault warning light comes on for 4 seconds, then goes off briefly (150 ms) and comes on for a further 4 seconds.
3. When the warning light goes off, release the accelerator pedal
4. When the pedal is released, the warning light begins to flash (frequency of 0.8 Hz)
5. Once the light has flashed the first figure of the number on the Code Card, press the accelerator pedal down and hold down.
6. The injection system warning light comes on again for 4 seconds. It then goes off to indicate that the first figure has been stored.
7. When the warning light goes off, release the accelerator pedal
8. When the pedal is released, the warning light begins to flash as described previously (point 4).
9. After the light has flashed out the second figure of the number, press the accelerator pedal. The warning light comes on for 4 seconds to indicate that the second figure has been stored.
10. Repeat the procedure described under points 4, 5, 6 and 7 for the other Code Card figures
11. When the pedal is released after the last figure has been stored, the warning light flashes at twice the previous rate (1.6 Hz) to indicate that the code has been accepted. If the warning light stays on, the code has been rejected.
    If the code is accepted, start up the engine. Otherwise, turn the key to STOP and try to carry out the operation again.

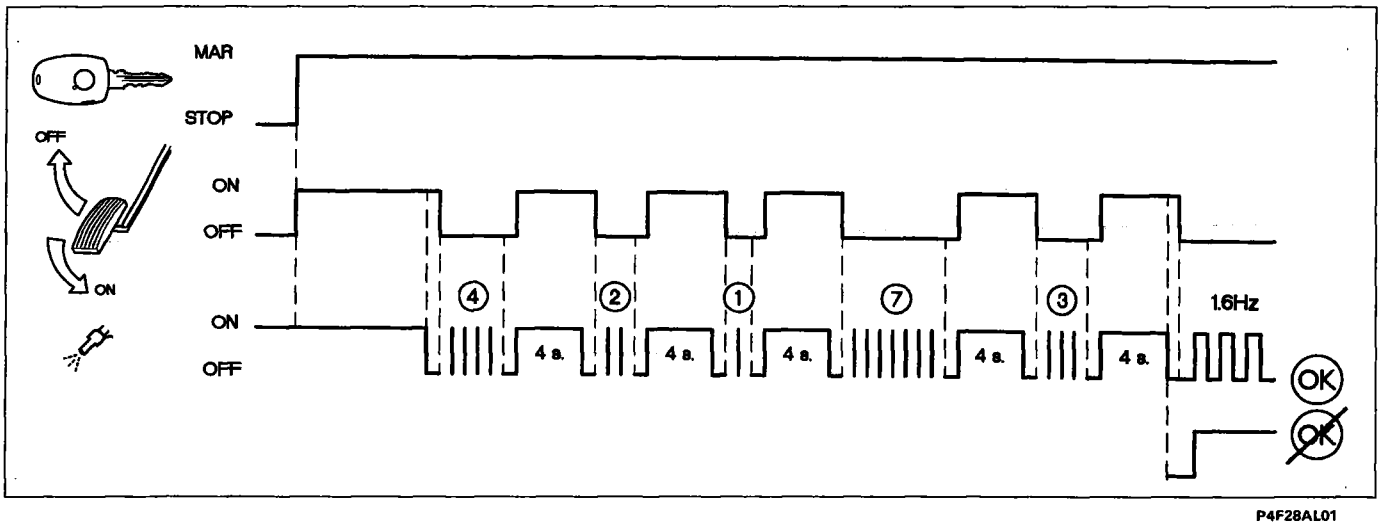

P4F28AL01

The graph shows pedal operations and warning light flashes for one particular example: **Electrionic Code 4 2 1 7 3.**

NOTE *This procedure allows the engine to be started ONCE ONLY, but it may be repeated an unlimited number of times.*

FIAT CODE WIRING DIAGRAM (Petrol version)

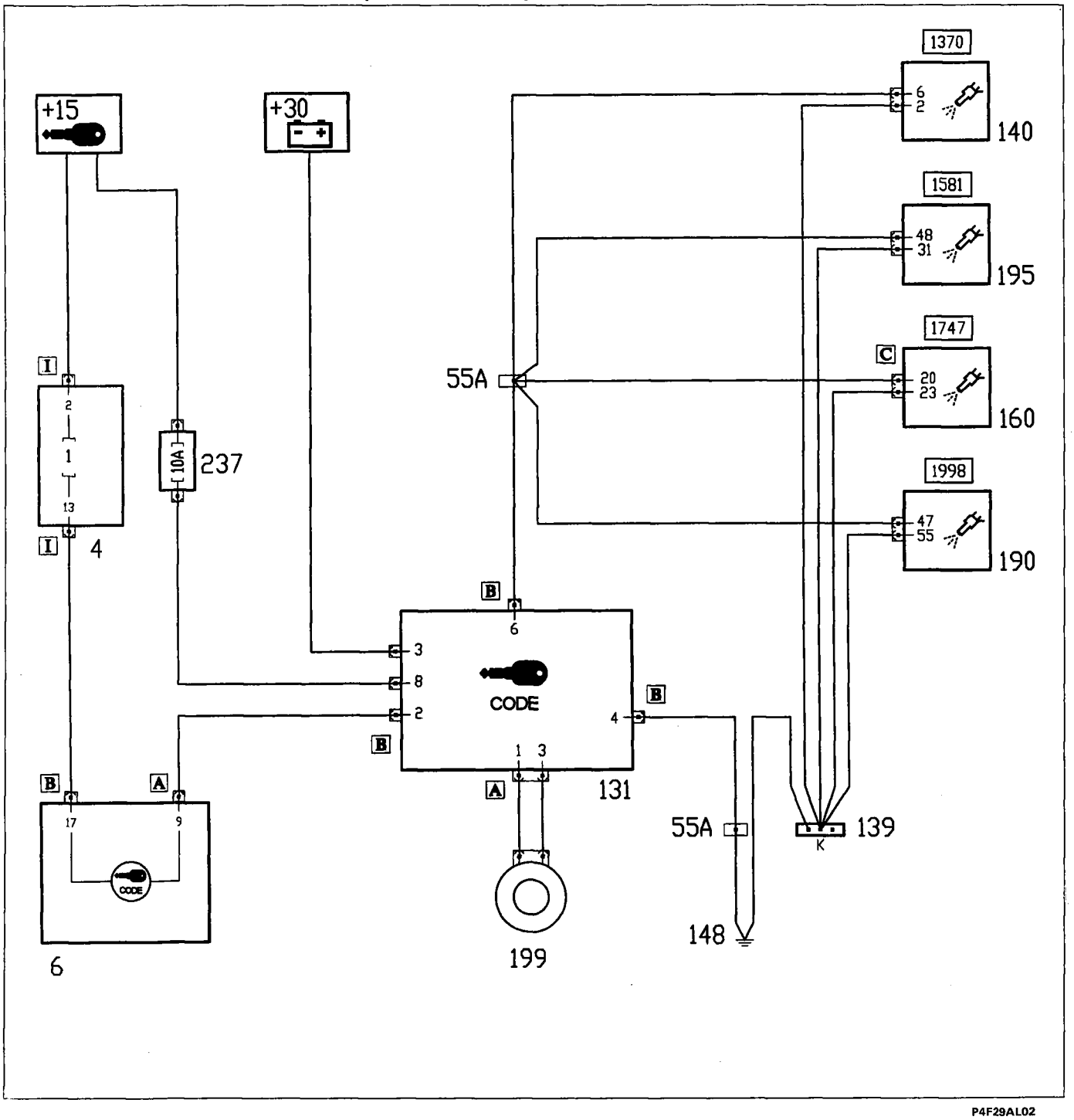

P4F29AL02

4. Junction unit
6. Instrument panel
55A. Left front/engine lead connection
131. Fiat CODE electronic control uint
139. Injection system tester socket
140. Injection/ignition control unit (1370)
148. Earth for electronic injection
160. Injection/ignition control unit (1747)
190. Injection/ignition control unit (1998)
195. Injection/ignition control unit (1581)
199. Aerial for Fiat CODE
237. 10A Fiat CODE fuse

FIAT CODE WIRING DIAGRAM (TD versions)

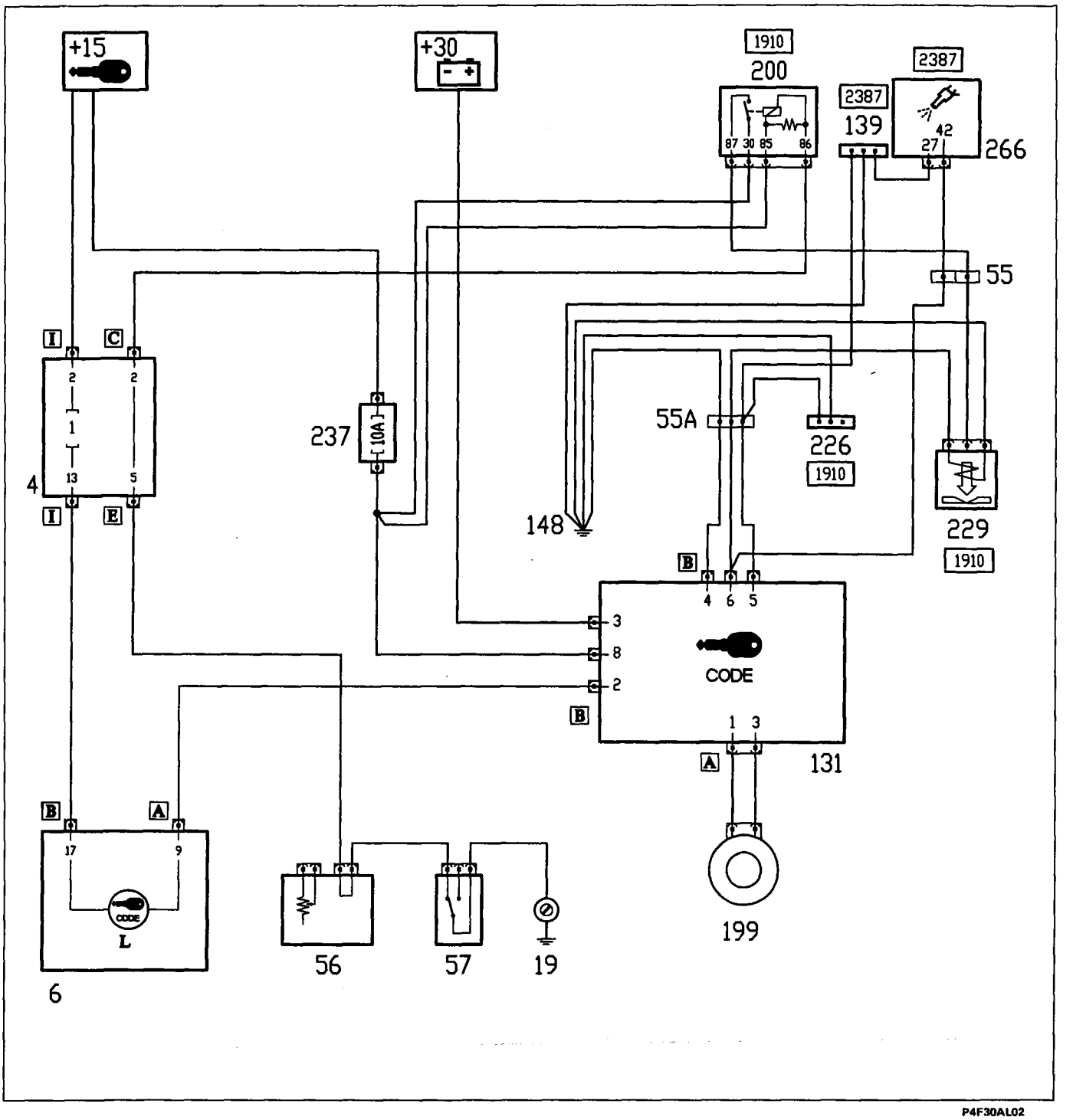

P4F30AL02

4. Junction unit
6. Instrument panel
19. Rear earth
55. Connection between left front/engine leads
55A. Connection between left front/engine leads
56. Fuel level gauge control unit
57. Inertia switch
131. Fiat CODE electronic control uint
139. Tester socket for injection system
148. Earth for electronic injection
199. Aerial for Fiat CODE
200. Inertia switch control relay
226. Fiat CODE system tester socket
229. Engine stop solenoid
237. 10A Fiat CODE fuse
266. Injection system electronic control unit

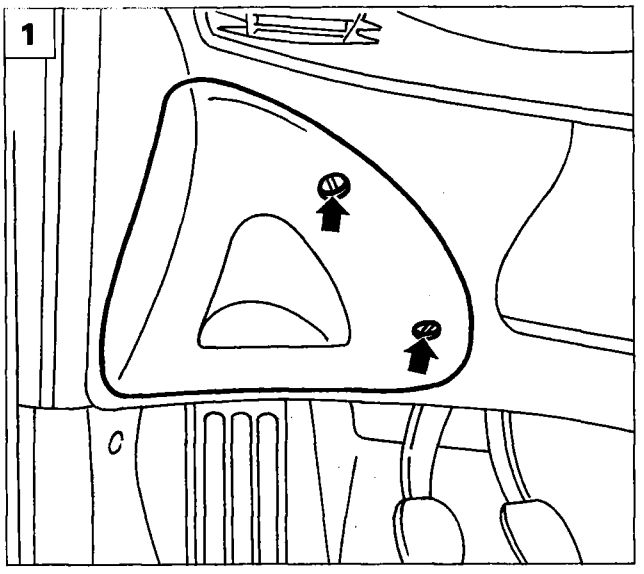

P4F116L01

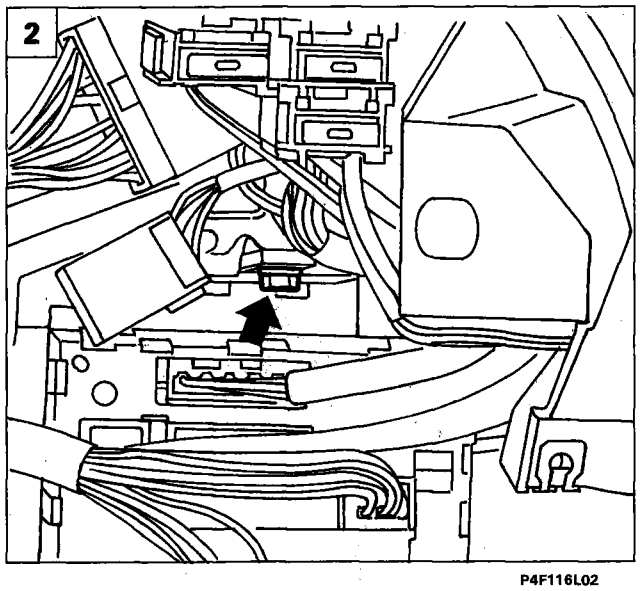

P4F116L02

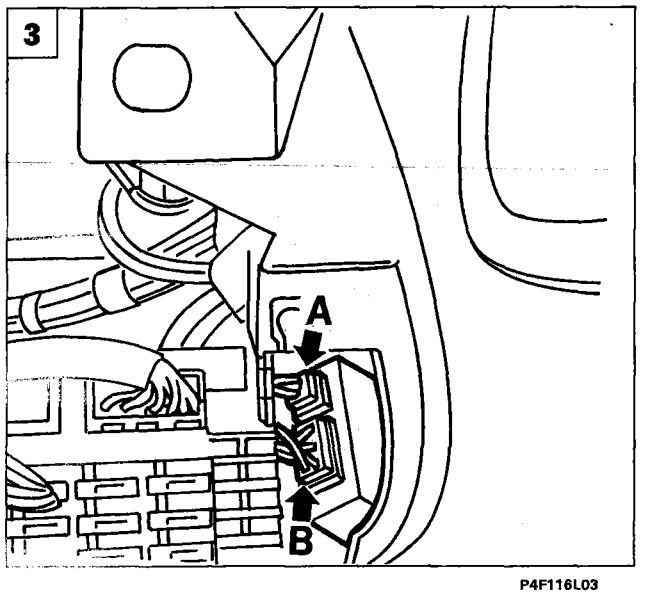

P4F116L03

REMOVING-REFITTING FIAT CODE CONTROL UNIT

1. Disconnect the battery negative terminal, then remove the junction unit protection.
2. Unscrew screw retaining the FIAT CODE control unit and push forward.
3. Disconnect electrical connections A and B from the control unit and remove the unit.

REMOVING-REFITTING FIAT CODE AERIAL

- Remove the lower steering column trim (as described in Group 70).

4. Prise up the aerial from the ignition switch by undoing the side clips.
   Disconnect the connection between the aerial and control unit**A** in figure 3). Then remove the aerial by removing it from the selector.

NOTE *Reverse order of removal operations to refit.*

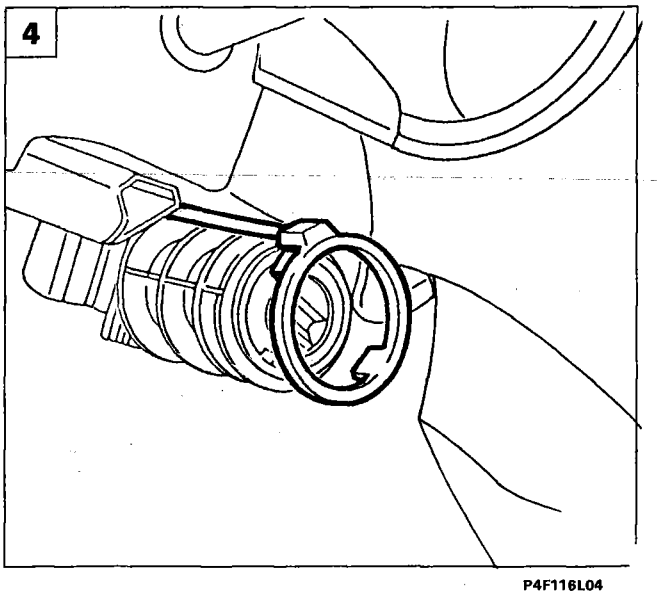

P4F116L04

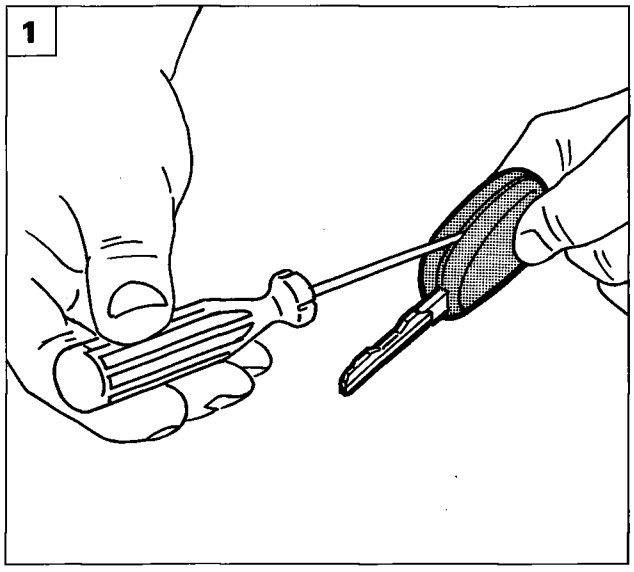

P4F117L01

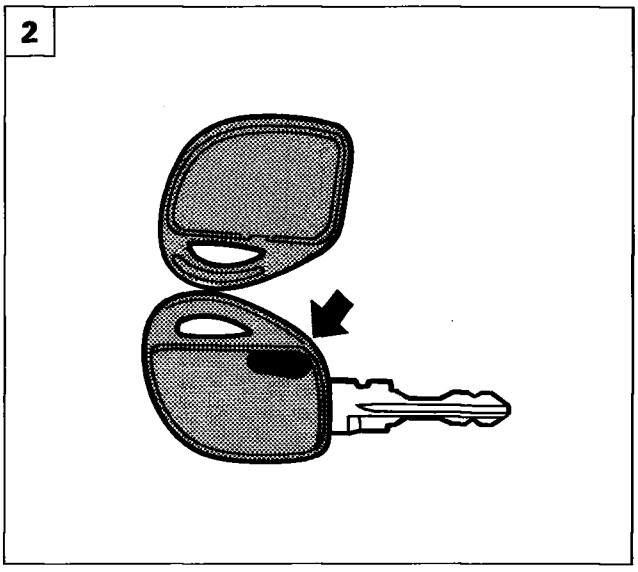

P4F117L02

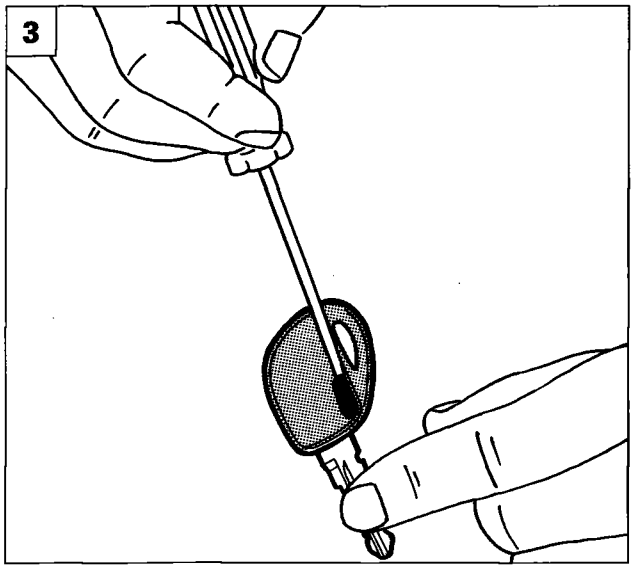

P4F117L03

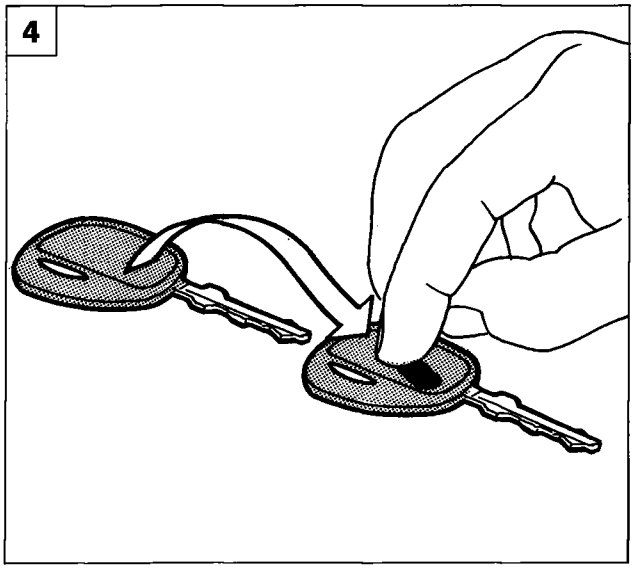

P4F117L04

REPLACING THE TRANSPONDER

Use great care to ensure that the Transponder does not break or become lost because it is a small component (carry out assembly on a table)

1. Insert a small screwdriver into the key hole and apply leverag;
2. Open the MASTER key: take care because it consists of two halves. The Transponder is arrowed;
3. Use a small screwdriver or awl to remove the Transponder from the OLD MASTER key hole.

4.5. Fit the Transponder of the OLD MASTER key in the housing of the NEW MASTER key. Position as shown and take care not to damage the electrical component;

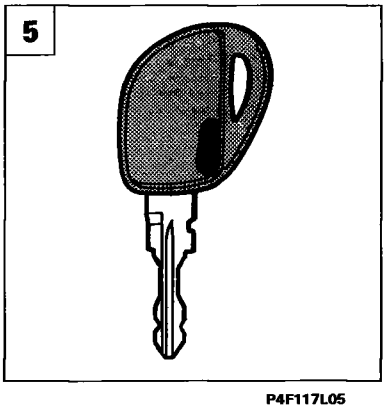

P4F117L05

Copyright Fiat Auto

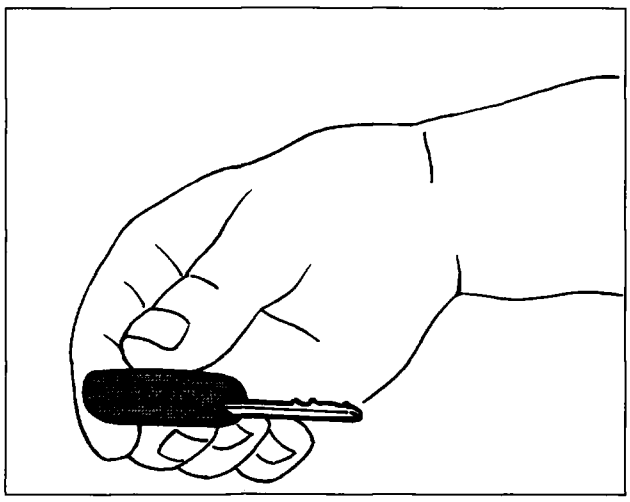

P4F118L01

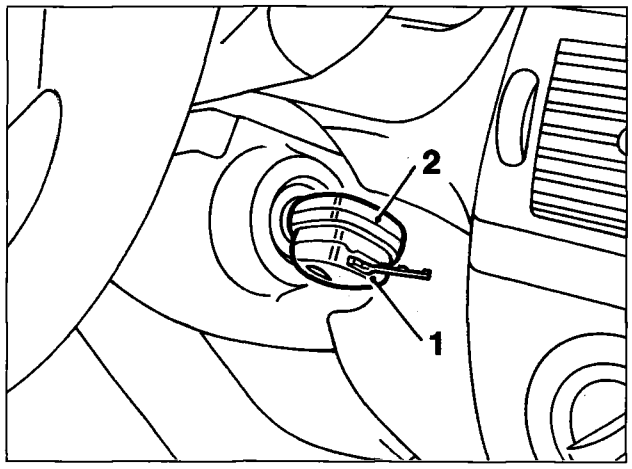

P4F118L02

- exercise slight pressure to join both halves of the NEW MASTER key;
- after carrying out the operation described, carry out the procedure for storing the new key set.

If the ignition has been damaged a long distance from the place where the MASTER key is kept, carry out the following emergency procedure:
- replace the damaged ignition block;
- fit a new MASTER key (1) without Transponder in the ignition;
- bring the old key (2) into contact with the Transponder with the new MASTER key (1) without the Transponder fitted in the ignition.
- Turn the key and keep the handles in contact to start the car.

As soon as possible, the Transponder in the OLD MASTER key must be transferred to the housing in the handle of the NEW MASTER key.

MASTER key (bordeaux)

If the MASTER key is not available, it is not possible to store new keys to allow engine start-up.

If the MASTER key is lost or its Transponder is broken or lost, the key must be replaced:

- *dowel and new key kit (including the CODE CARD);*
- *FIAT CODE control unit;*
- *electronic injection control unit.*

Components are replaced at the first service when it is necessary to use the MASTER key (e.g. broken ignition block).

Transponder

It is absolutely prohibited to handle, replace or exchange key Transponders (except when replacing the dowel kit and new keys and only for the MASTER key).

Adding a new key to the keys provided with the vehicle

Adding a new key involves re-storage of all keys provided with the vehicle because keys not used during this procedure are deleted from the memory.

LOCATION OF ALARM SYSTEM COMPONENTS

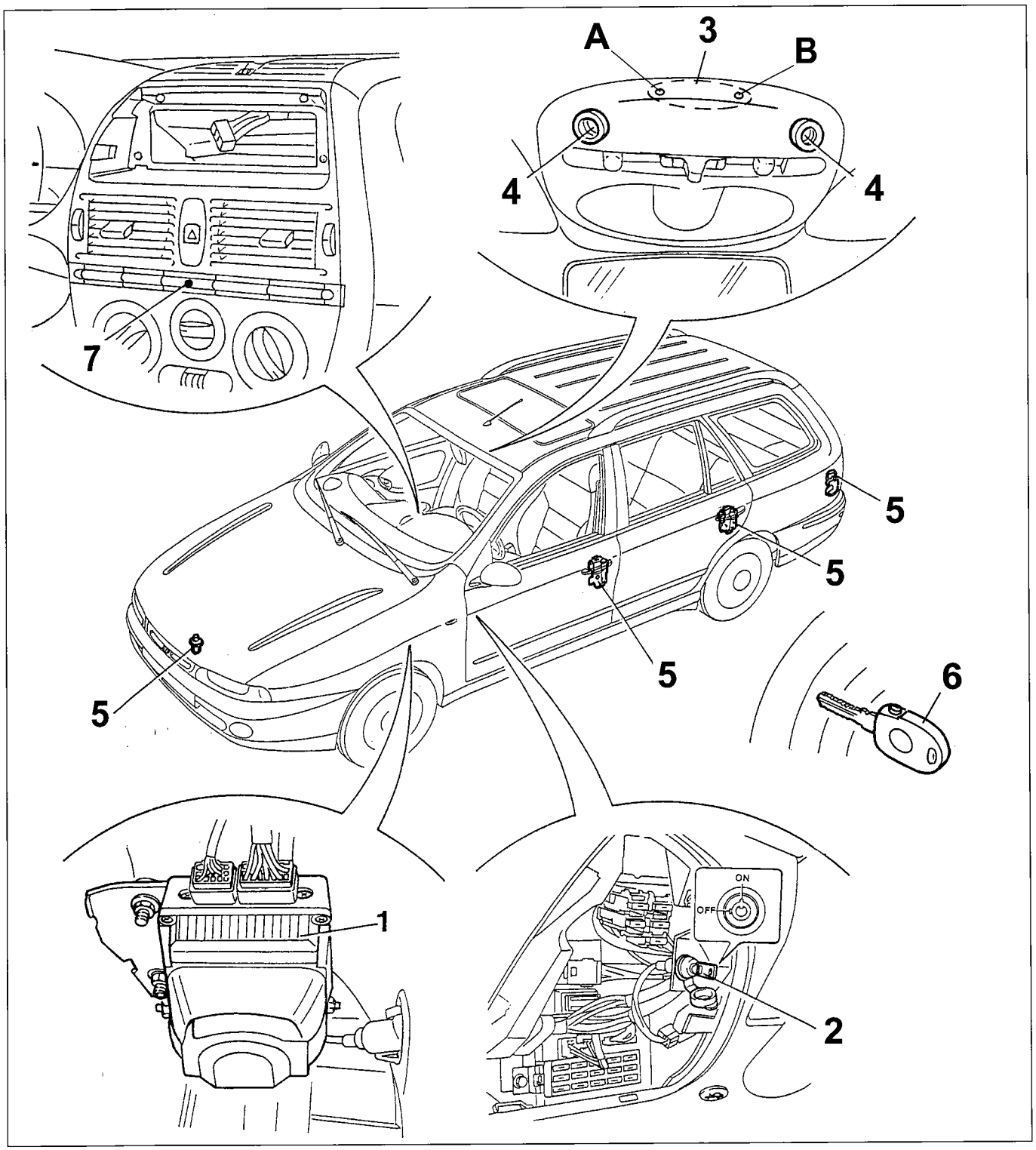

P4F125L02

1. Alarm control unit
2. Switch with emergency key
3. Receiver in front centre courtesy light
   A. Red / green warning light (LED)
   B. Programming button
4. Volumetric sensors in centre courtesy light
5. Door and lid sensors
6. Radiofrequency remote control integrated in the ignition key
7. Warning light (LED) in centre switch holder panel

INTRODUCTION

The V.A.S. (Vehicle Alarm System) radiofrequency alarm offers volumetric and perimeter type protection; in effect, it checks the state of the lids and doors and also checks for a moving object inside the passenger compartment. In particular, it is capable of:
- adapting its operation to the regulations in force in various countries governing alarm systems;
- distinguishing between intermittent and permanent errors or faults;
- memorizing the number of times the alarm system has been activated;
- detecting faults and irregularities with the system connecting cables.

The alarm system comprises:
- a radiofrequency receiver, incorporated in the centre front courtesy light
- a radiofrequency remote control, integrated in the ignition key
- volumetric control sensors incorporated in the centre front courtesy light
- front and rear door and lid sensors;
- an alarm control unit, located in the left front wheel arch housing, which is integrated with a self-supplied siren;
- a switch with an emergency key (ON - OFF), located near the junction unit, for deactivating the system.

From January 1998, the alarm systems fitted on vehicles destined for the U.K. will not have an emergency key therefore the control unit will be constantly activated.

NOTE *Compared with the infrared remote control, the radiofrequency remote control facilitates the operations of activation and programming because it has a greater operating range, is not directional and is not affected if the transparency of the glazed surfaces is poor.*

Types of alarm system

Two different types of alarm system can be fitted on the vehicles which can be recognized by the colour (red or green) of the warning light (LED) in the receiver incorporated in the centre front courtesy light and by a code (EA or EC) stamped on the ignition key which incorporates the remote control (see overleaf).

*In the case of service operations, the control unit **should always be matched** with the courtesy light, receiver and remote controls for the same type of system (see overleaf).*

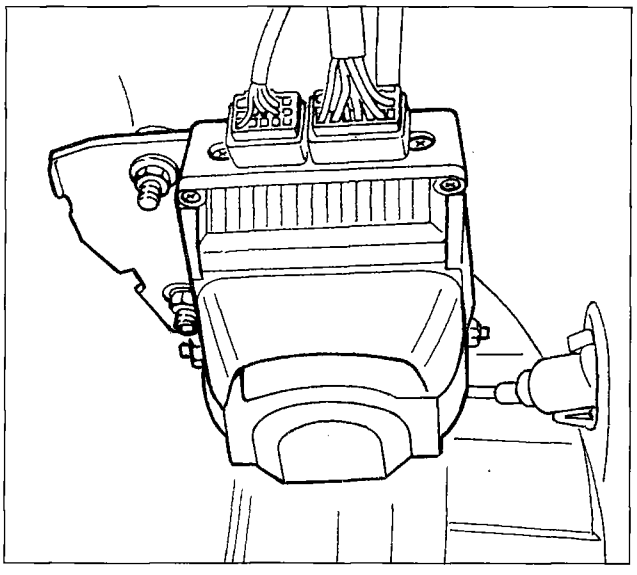

P4F31AL01

ALARM CONTROL UNIT

This constitutes the main system component and it controls and processes the signals coming from the:
- rear lid sensor;
- front lid sensor;
- door opening/closing sensors, in the locks;
- volumetric sensors;
- ignition switch.

ALARM SIREN

This is a compact type, self-supplied siren integrated in the control unit.
The intensity of the siren sound depends on the country where the vehicle is registered (see "COUNTRY CODE PROGRAMMING")

NOTE *The siren can be excluded by pressing the button on the remote control for more than 4 seconds when the alarm is switched on.*

RECEIVER

The radiofrequency receiver, incorporated in the centre front courtesy light, is an electronic device which receives the signal emitted by the remote control and carries out the functions of opening and closing the doors and activating the alarm control unit

Each receiver can be programmed with one or more remote controls memorizing the codes (however, only the last 8 entered are retained)

There is a green or red LED (1) in the receiver incorporated in the centre front courtesy light which comes on when the signal is received, whilst the button (2) allows the code to be programmed

When the receivers are fitted on the vehicle they contain a "UNIVERSAL" code which is useful for carrying out tests at the end of the production line using a special remote control with a universal code.

When the vehicle is handed over to the Customer the receiver must be personalized, replacing the "UNIVERSALE" code with the code for the remote controls which come with the vehicle (see "PROGRAMMING" on the pages which follow).

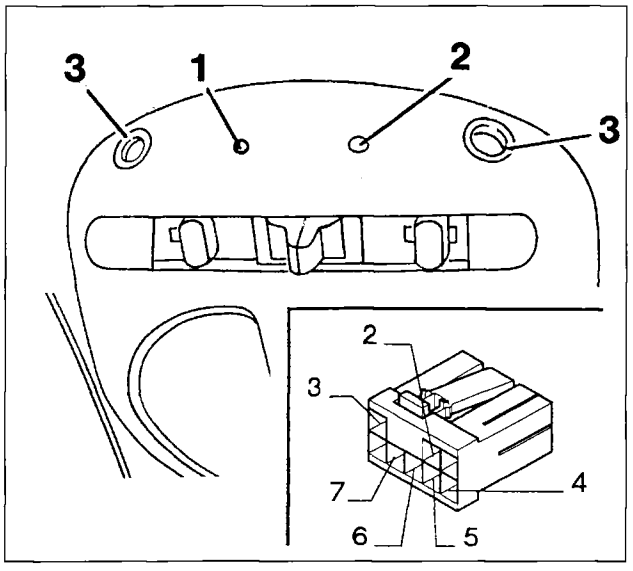

P4F121L02

View of receiver in courtesy light

1. Green or red LED
2. Programming button
3. Volumetric sensors

Receiver connector

1. Not connected
2. Serial line to the alarm control unit
3. Positive from battery (+30)
4. Earth
5. Door unlocking
6. Door locking
7. Positive controlled by the ignition (+15)
8. Not connected

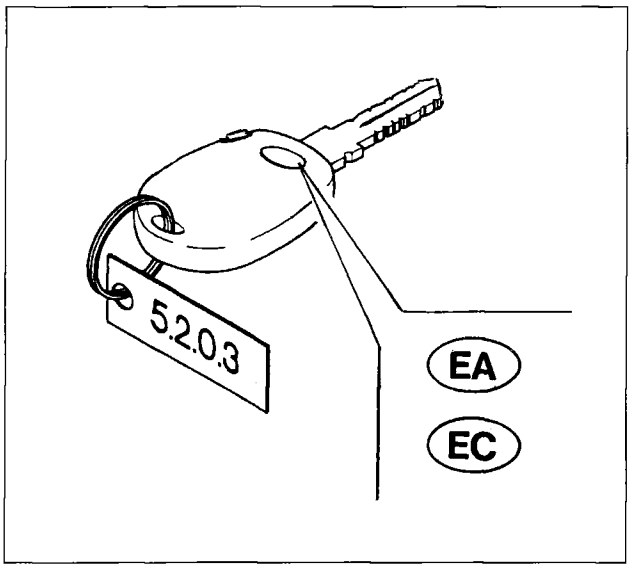

P4F121L03

Replacing receiver / remote controls

In the case of a service operation which involves replacing the receiver and/or the remote controls, components for the same type of system must be used, maintaining the following pairings:

Receiver in courtesy light with red LED	Remote control integrated in the ignition key with EA code;
Receiver in courtesy light with green LED	Remote control integrated in the ignition key with EC code;

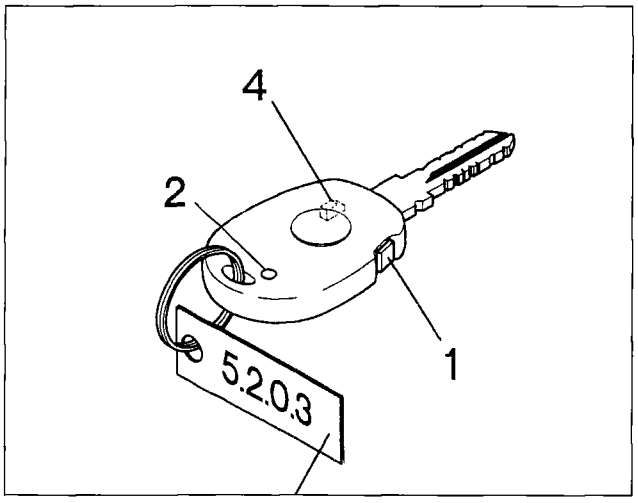

P4F122L01

REMOTE CONTROL

The remote control for the alarm system, incorporated in the ignition key (diagram at the side), is an electronic device which sends the receiver a suitable signal for operating the unlocking/locking of the doors and the activation/deactivation of the alarm system.

Each time the remote control button (1) is pressed it emits a radio code which has an operating range of about 10 metres.

1. Control buttonmando
2. Repeater LED
3. Access code label (password)
4. Transponder (for Fiat CODE - not visible)

NOTE *Each key with remote control has a 4 digit password code label (3) for protection against unauthorized programming (protected programming). The label should be removed by the Dealership when the vehicle is consigned and placed on the back of the code card.*
If the labels are mislaid, this does not adversely affect the use of the alarm system, but it means that ***new remote controls cannot be programmed*** *(see description on the pages which follow); if necessary,replace the receiver in the centre front courtesy light and the keys (for the labels).*

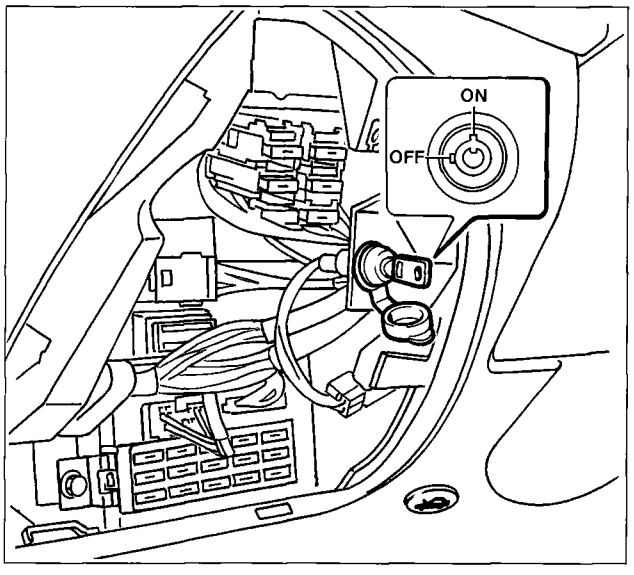

P4F33AL01

EMERGENCY SWITCH WITH KEY

The key for the emergency circuit makes it possible to exclude the alarm system, when necessary. It is located at the side, under the dashboard and is only accessible after the left lower cover has been remoted (see diagram).
The emergency key can be placed in two positions, namely:

OFF (key completely turned in an anti-clockwise direction) corresponding to the de-activation of the alarm circuit

ON (key completely turned in a clockwise direction) corresponding to the activation of the alarm system supply

From January 1998 the alarm systems fitted on vehicles destined for the United Kingdom will not have an emergency key and therefore the control unit will be in a state of constant activation.

LED

This red LED located in the centre of the dashboard on the panels with the switches for the rear fog lamps, heated rear windscreen etc. has the function of signalling the state of the system and any irregularities (see "AUTODIAGNOSIS").

VOLUMETRIC SENSORS

Volumetric sensors allows additional surveillance by checking that there are no intrusions in the passenger compartment. They are incorporated in the centre front courtesy light and have the function of a transmitter and a receiver.

OPERATION

Switching on the alarm

The alarm is switched on by pressing the remote control button, with the key extracted from the ignition (or in the OFF or PARK position); the fact that the alarm has been switched on is siganlled by the direction indicators coming on for about 2.5 seconds and a corresponding auditory signal (beep). The remote control has an operating range of about 10 metres.

Switching off the alarm

The alarm is switched off by pressing the remote control button; the fact that the alarm has been switched off is signalled by two flashes of the direction indicators and two corresponding auditory signals (beeps)
The switching on or off of the alarm is also signalled by the LED and, only in countries where legally permitted, by visual and auditory signals, as indicated previously for the "ITALIAN" operating mode.

Excluding the alarm

If the remote control batteries are run down or the alarm system is faulty, it can be deactivated by turning the emergency key to the OFF position.
This same key can be rotated to the OFF position if the vehicle is not going to be used for long periods (more than three weeks).
To reactivate the system, turn the emergency key to the ON position again and check that it is in this position when the vehicle is handed over to the Customer.
For vehicles destined for the English market which do not have an emergency key, if the remote control batteries are run down and the alarm cannot be switched off, then it is necessary to wait until it is deactivated (i.e. after the siren cycles and the direction indicators have come on intermittently).

Surveillance

During surveillance the LED flashes at a frequency of 0.8 Hz and the alarm system controls:
- the doors and the front and rear lids
- the disconnection of the battery and/or the cutting of the cables
- the ignition switch against unauthorized attempts to start the engine;
- movements inside the passenger compartment (volumetric surveillance).

Alarm state

The alarm state is entered into when one of the surveillance sensors detects an irregular situation.
The alarm state involves the activation of the siren for a maximum of three 26 second cycles in addition to the direction indicators coming on for a maximum of 4.7 minutes (only in countries where legislation permits) if the cause of the alarm persists.
It is possible to escape the alarm system by pressing the remote control button (see chapter on "Switching off the alarm") or, **only in emergency conditions if it is not possible using the remote control control,** by turning the emergency key to the OFF position.

NOTE *The alarm condition for the "Surveillance" state remains memorized inside the control unit.*

Inhibiting the volumetric surveillance

The volumetric surveillance, can be excluded before the alarm system is switched on in two different ways, namely:
1. With the ignition key in the ON position, press the button for the receiver in the centre front courtesy light briefly (0.5 seconds) and then, within 8 seconds, turn the ignition key OFF.

2. With the ignition key in the ON position, turn the key in quick succession to the following positions: OFF - ON - OFF.

Confirmation that the volumetric surveillance has been excluded is given by the LED coming on for 2 seconds.

The key can be returned to the ON position for a maximum of 30 seconds from the above mentioned manoeuvre, without re-enabling the volumetric surveillance; this function is useful, for example, to allow the electric windows to be closed.

When the key is then turned to the ON position, for a period of more than 30 seconds, just as when the alarm is turned on for the second time, the volumetric surveillance is re-enabled.

Auto switching on of alarm (only in Belgium and United Kingdom)

Vehicles with alarms programmed for the Belgian and United Kingdom markets are equipped with a **"passive"** "auto switching on" function. This function ensures that the alarm is automatically partly switched on a short while (28 seconds) after the vehicle is left by the user.
The surveillance in the passive operating mode is exactly the same as the normal kind; it can be activated via the remote control, but the doors are not locked. The automatic insertion takes place 28 seconds after the following conditions have been verified:
- ignition key turned from ON to OFF;
- last open door opened and then closed.

The opening of any door or lid (front/rear), before the 28 seconds have elapsed, stops the countdown. Closing the door/lid starts off the counting again from zero.

In order to regain possession of the vehicle again after the auto switching on, the user should press the remote control button once.

Switching on alarm with siren excluded

Each time one wishes to exclude the operation of the siren when the alarm system is switched on, it is necessary to keep the remote control button pressed for more than 4 seconds. After the auditory/visual signals described previously indicating that the alarm has been switched on, 5 beeps of the siren in rapid succession will follow to indicate that the siren has been excluded during the surveillance. It will be restored the next time the alarm is switched on.

Signalling of remote control "batteries run down"

This signal can take place in two ways:
- by the remote control LED flashing each time the alarm switch is pressed as opposed to the series of flashes in normal conditions.
- by the LED coming on constantly each time the alarm system is switched off.

When one of the signals described above is encountered, the remote control batteries must be replaced.
When the batteries are replaced, the LED in the remote control starts to flash again regularly, whilst the other LED in the centre tray no longer signals that the remote control batteries are run down.

PROGRAMMING

The alarm signalling methods can vary according to the laws in force in the country of registration; the system must therefore be programmed entering the "Country Code" as described overleaf.
The system "recognizes" the code for an unlimited number of remote controls, but only the last 8 are memorized (when the ninth remote control is entered, the first is expelled from the memory).
There are two programming modes (see the description on the pages which follow):

- before entering the access code (password): **SIMPLIFIED PROGRAMMING**
- after closing the memory: **PROTECTED PROGRAMMING**

Given the importance of following the programming procedure in the correct order, quickly and accurately, it is advisable, at least initially, for two people to carry out the operations: one reading the instructions and the other carrying them out to the letter.

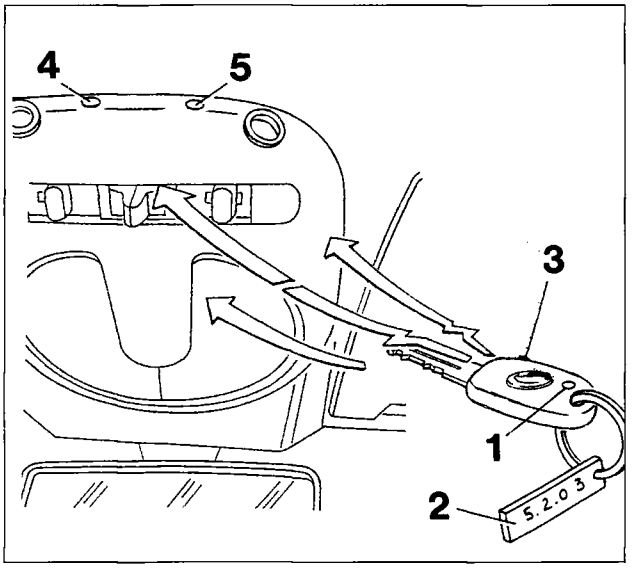

P4F125L03

1. Remote control LED
2. 4 digit access code (password)
3. Remote control button on ignition key
4. LED in centre front courtesy light
5. Programming button

SIMPLIFIED PROGRAMMING

A remote control must always be programmed with the:
- alarm switched off (LED off)
- ignition key extracted or in the OFF or PARK position
- emergency key (except for versions for the English market which do not have one) in the ON position

In this programming system all the codes for an unlimited number of remote controls are "recognized", but only the last 8 remain memorized by the alarm system as follows:

1. press the button (5) on the receiver, incorporated in the centre front courtesy light, and keep it pressed, the adjacent LED (4) should flash;
2. still keeping the button (5) pressed, press the remote control button (3);
3. then release the remote control button (3) when the LED (4) in the receiver comes on constantly;
4. then release the button (5) in the courtesy light at the end of the cycle.

If, when the remote control button (3) is pressed, the receiver LED (4) stops flashing and goes out, this means that the receiver memory is closed; "PROTECTED" programming must be used.

NOTE *To programme further remote controls, repeat the operations described above.*

Programming the country code

Procedure a)

Having completed the programming of the remote controls, within 15 seconds of releasing the button (5) on the receiver in the courtesy light, the code for the country in which the alarm system will be operating must be programmed by pressing the receiver button (5) n. times in quick succession (see table below): each time it is pressed, the LED (4) will flash. If the button (5) is not pressed, the system prepares to operate in accordance with the "country code" programmed previously; in the case of the initial programming, the system automatically operates in the "ITALIAN" mode.

NOTE *The 15 seconds are reduced to 3 from the second programming onwards.*

COUNTRY CODE (button pressed)	COUNTRY OF OPERATION
1	ITALY
2	GERMANY
3	FRANCE
4	SWITZERLAND

COUNTRY CODE (button pressed)	COUNTRY OF OPERATION
5	UNITED KINGDOM
6	BELGIUM
7	HOLLAND
8	EEC

If the procedure has been carried out correctly, the receiver LED (5) will flash; ***6 times*** *(for the system with a red LED) or* ***n. times*** *(for the system with a green LED, where n. is the number of the "country code" selected), confirming that the code has been programmed in both the receiver and the control unit. If this is not the case, the LED (5) will flash:* ***18 times*** *(system with red LED) or* ***remain on constantly for 5 seconds*** *(system with green LED). If the latter case occurs then it will be necessary to repeat all the operations starting from point 1 of the programming.*
For vehicles destined for the U.K. market, if the LED does not come on again, this means that the control unit is not connected to the receiver or it is not supplied.

NOTE *When programming the "country code" it is possible to use the procedure for the diagnostic equipment.*

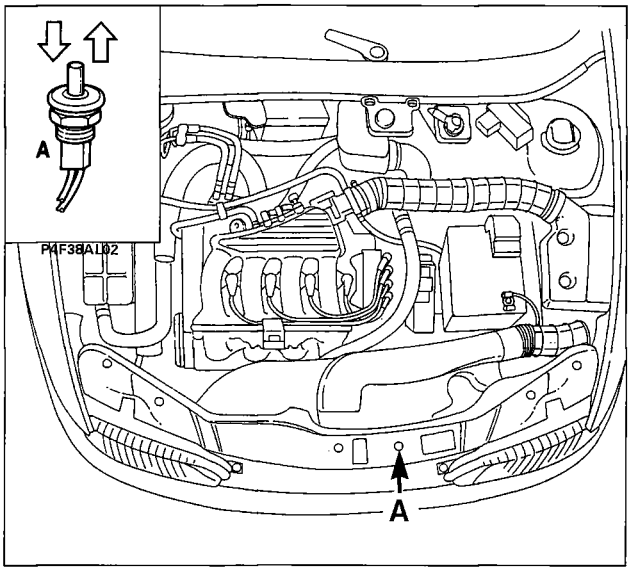

P4F38AL01

Procedure b)
Alternatively, the "country code" can be programmed using the following procedure:
- open the front lid;
- turn the ignition key from ON to OFF then, within 15 seconds, press the switch (A) (front lid opening sensor) 7 times in quick succession (in less than 10 seconds); 5 beeps will signal entry into MANUAL DIAGNOSIS (see paragraph). During this stage (5 beeps) press the switch (A) and keep it pressed. A last long beep will signal that this manoeuvre has been accepted.
- keep the switch pressed for the entire duration of this long beep. The latter confirms entry into the "country code programming" and consequently the possibility of entering the "country code";
- release the switch (A) and, within 10 seconds, press the same switch n. times (see table on previous pages) to select the desired country operating mode (each time it is presssed there will be a confirmation beep).

The simplified programming procedure definitively cancels the universal code, used before the vehicle is handed over to the Customer.

CLOSING THE MEMORY

To prevent entering unauthorized remote controls, the memory must be protected (closed); this operation takes place automatically after the alarm system has been switched on/off 128 times. The memory can also be closed manually by entering the password (4 digit code on the remote control plate illustrated in the "REMOTE CONTROL" chapter): for example on a new vehicle during the pre-delivery stage, after all the codes for the remote controls which are given to the Customer have been entered.

The method for entering the password is as follows:
1. Take one of the plates for the remote controls programmed in the receiver, then press the receiver button for 1 second: the LED will flash as long as the button is pressed.
2. Release the button: after around 3 seconds the LED will flash briefly to indicate the possibility of introducing the first figure of the password.
3. Press the receiver button as many times as indicated by the first digit of the password (if, for example the password is 5.2.0.3.: press it 5 times). It will be noticed that each time the button is activated the LED will come on briefly to give a visual confirmation.
4. About 3 seconds after the button has been operated for the last time (the fifth in the example) the LED will emit another flash to request the input of the next figure.
5. Proceed from point 3 to enter all the subsequent figures.

NOTE *When there is a "0" in the password (see example), the receiver button should not be pressed, but one should wait for the request to enter a new figure, signalled by the flashing.*

After having entered the 4 figures of the Password, the LED in the receiver:
- **will flash for about 10 seconds** (system with red LED) or **will not come on again** (system with green LED); this indicates that the Password has been entered correctly;
- **will come on constantly for about 10 seconds;** this indicates that the password has not been correctly entered.
  If this is the case, after the LED goes out, the correct password should be entered starting from point 1.

Entering the password correctly "closes" (protects) the memory to avoid the programming of unauthorized remote controls. In effect, with the memory "closed", it is not possible to programme a new remote control, because after having transmitted the new code, the LED in the receiver stops flashing to indicate the failure of the operation. In order to programme a new remote control, the "memory has to be opened", following the procedure described below.

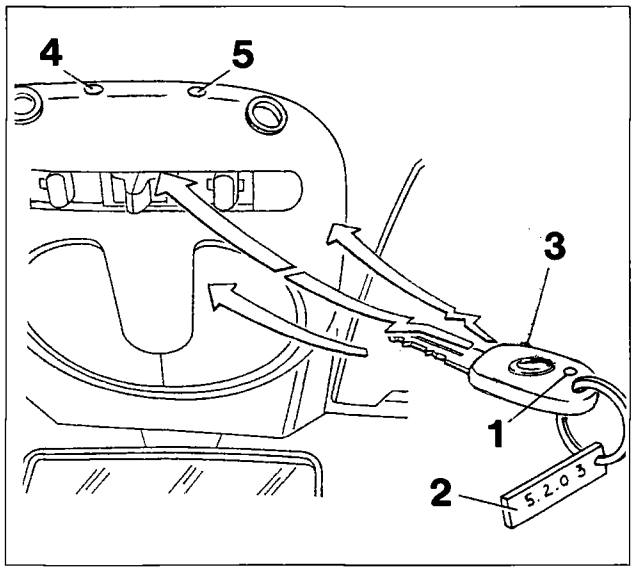

P4F125L03

1. Remote control LED
2. 4 digit password
3. Control button in remote control
4. LED in courtesy light
5. Programming button

PROTECTED PROGRAMMING

If the memory is "closed", further codes for remote controls can only be introduced after the memory has been "opened" with one of the codes for the keys programmed in the receiver.

OPENING THE MEMORY AND PROGRAMMING A NEW REMOTE CONTROL

Opening the memory

The memory should be opened by following the operations described below, carrying them out quickly in the order given:

1. press the button (5) in the receiver for around 2 seconds; the LED (4) will flash as long as the button is pressed;
2. release the button; after about 2 seconds the LED will flash briefly indicating that the first figure of the password can be introduced;
3. press the button (5) in the receiver as many times as indicated by the first digit of the password (if, for example, the password is 5.2.0.3., press it 5 times). It should be noted that each time the button is activated the LED (4) will come on briefly to give a visual confirmation;
4. about 2 seconds after the button is activated for the last time (the fifth in the example), the LED will emit another flash to request the input of the next figure;
5. proceed from point 3 to enter all four digits (if there is a "0", there is no need to press, simply wait for the next request);
6. if the password has been entered correctly (memory opened), the LED will start to flash (for about 10 seconds), if, on the other hand, it comes on constantly (for about 10 seconds) it is necessary to repeat the cycle from point 1 because the password has not been recognized.

Programming a new remote control

7. Whilst the LED (4) is flashing, press the button (5) and keep it pressed, the LED (4) will continue to flash;
8. press the button (3) for the new remote control until the green/red LED (4) in the courtesy light comes on constantly;
9. then release the button (3) for the remote control when the LED (4) in the courtesy light comes on constantly;
10. then release the button (5) in the courtesy light at the end of the programming cycle.

If the procedure has been carried out correctly, the LED in the receiver will flash: ***6 times*** *(for systems with a red LED) or* ***n. times*** *(for systems with a green LED, where n. is the number of the "country code" selected), confirming that the code has been programmed in both the receiver and the control unit.*
If this is not the case, the LED will flash: ***18 times*** *(systems with red LED) or* ***remain on constantly for 5 seconds*** *(systems with green LED).*
In this last case, all the operations will have to be repeated, starting from point 1 of the programming.
After programming the new remote control, the memory will return to the "closed" state.

SYSTEM AUTODIAGNOSTIS

The alarm system is capable of notifying the User of any irregularities in the system by the LED in the centre of the dashboard coming on either constantly or flashing.

When the system is switched on it carries out an autodiagnosis, whose positive outcome is signalled by 1 flash of the LED at 4 Hz; if there is an irregularity or system failure, the LED will highlight it according to the methods described in the table below.

Autodiagnostic display

FLASHING MODE	FAULT / FAILURE
8 Hz, duration 2.5 secs	Doors/lids open or switches (opening sensor) broken
Light constant, duration 2.5 secs	Volumetric sensors broken

If one of the doors or the front or rear lid is open or the system detects a fault in the volumetric sensor,the appropriate sensor is excluded from the surveillance and an auditory warning signal (beep) is given out 1 sec after switching on.

When switching off, the system gives an indication, through the flashing of the LED, of which sensor has activated the alarm during the surveillance (see table below).

Signalling of alarms triggered

NO. OF FLASHES	IDENTIFICATION OF FAULT / FAILURE
1	Right front door
2	Left front door
3	Right rear door
4	Left rear door
5	Volumetric sensors in courtesy light
6	Front lid
7	Rear lid
8	Supply controlled by ignition +15
9	Direct supply + 30 or emergency key cables cut
10	At least 3 causes of alarm
Light on constantly	Remote control battery run down

The flashes are emitted in order, with intervals of 1.5 seconds for a maximum of 2 minutes or until the key is turned to the ON position.

If the LED signals faults, the User should seek assistance from the Fiat Service Network. It should be remembered that during service operations on the vehicle or in the case of faults with the alarm which activate the siren, the alarm system can be excluded by turning the emergency key, located near the junction unit, from the ON position to the OFF position.

When the operation is completed, turn the emergency key to the ON position and always refit the switch protective cover.

NOTE *This is not valide for vehicles destined for the United Kingdom because they are not fitted with an emergency key.*

⚠ *Each individual component in the alarm system fitted on the vehicle becomes an integral part, therefore it should not be fitted or tested on other vehicles, even those of the same model.*

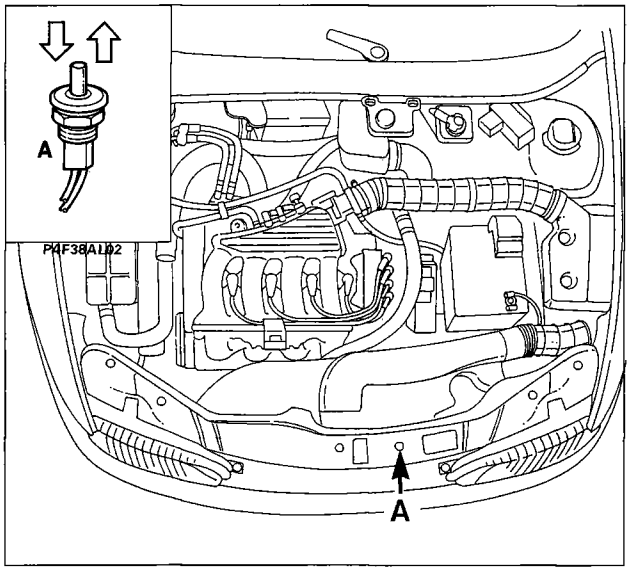

P4F38AL01

MANUAL DIAGNOSIS

1st stage (activation of manual diagnosis)

Proceed as described below:

- Open the front lid;
- turn the ignition key from ON to OFF then, within 15 seconds, press the switch (A) (front lid opeing sensor) 7 times in quick succession (in less than 10 seconds); 5 beeps will signal entry into "MANUAL DIAGNOSIS";
- during this stage (5 beeps) leave the switch (A) (bonnet lid opening sensor) alone; 1 flash of the direction indicators will confirm the start of the procedure;

2nd stage (manual diagnosis of the volumetric sensors)

The "MANUAL DIAGNOSIS" automatically activates the volumetric sensor autodiagnostic procedure for a duration of about 10 seconds (keep the doors and windows closed during this stage);

- if there are no faults, there will be 3 beeps of the siren and 3 flashes of the direction indicators;
- if there is a fault, there will be one flash and one beep.

3rd stage (manual diagnosis of door/lid opening/closing sensors)

Carry out a fault diagnosis for each opening/closing sensor for the moving parts (doors/lids): each time a door or lid is opened, there will be a beep of the siren accompanied by a brief flash of the direciton indicators and the LED.

4th stage (deactivation of the manual diagnosis)

It is possible to exit the "MANUAL DIAGNOSIS" in two ways:
- automatically: by not opening a door or a lid for at least 30 seconds;
- manually: by turning the ignition key from OFF to ON.

Exit from "MANUAL DIAGNOSIS" is signalled by a beep (0.5 secs) and the direction indicators coming on (2.5 secs).

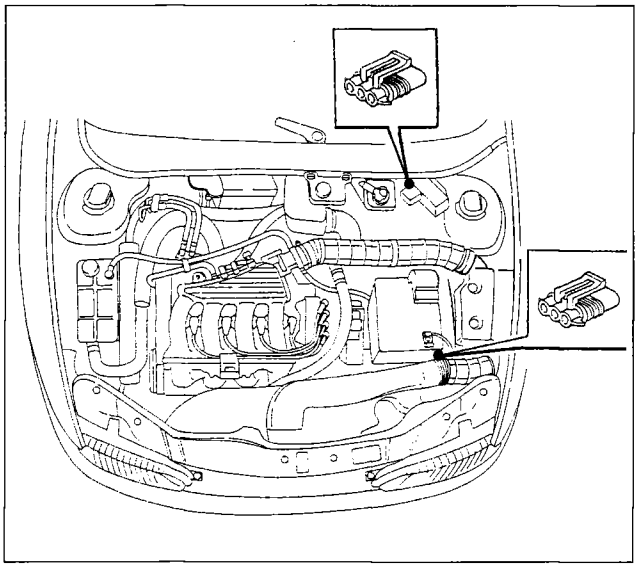
P4F129L01

FAULT DIAGNOSIS USING DIAGNOSTIC EQUIPMENT

The system is equipped with a special diagnostic socket for connection with the diagnostic equipment.

Before connecting the diagnostic equipment, make sure that the emergency key is switched ON.

Location of alarm system diagnostic socket

SIGNALS ENTERING AND LEAVING THE ALARM CONTROL UNIT

N°	I/O	I Max (A)	FUNCTION
B1	OUT	6	Relay n.a. contact: right direction indicators branch
B2	OUT	6	Relay n.a. contact: left direction indicators branch
B3	OUT	8	Preparation for relay n.c. contact (*)
B4	IN	8	Preparation for relay n.c. contact: +15 for B3 (*)
B5	OUT	8	Preparation for relay n.c. contact (*)
B6	IN	8	Preparation for relay n.c. contact: +50 for B5 and B10 (*)
B7	IN	12	Direction indicators relay joint contact: +30 direction indicators supply
B8	IN	-	Switch (sensor) detecting left front door open (=closed)
B9	IN	-	Switch (sensor) detecting right front door open (=closed)
B10	OUT	0,04	Preparation for operation of two-coloured LED (*)
B11	IN	0,04	Preparation for operation of two-coloured LED by Fiat CODE (*)
B12	IN	2	Pos. controlled by ig. (+15)
B13	IN	-	Remote key: joint
B14	OUT	0,3	Check operation: signalling of door/s open (*)
B15	IN	-	Switch (sensor) detecting left rear door open (=closed)
B16	IN	-	Switch (sensor) detecting right rear door open (=closed)
B17	IN	-	Switch (sensor) detecting rear lid open (=closed)
B18	IN	-	Switch (sensor) detecting front lid open (=closed)
A1	OUT	0,04	Operation of LED
A2	I/O	-	Serial line from courtesy light
A3	IN	-	Direct positive supply (+30)
A4	IN	-	Emergency switch with key: internal supply
A5	OUT	0,03	Positive supply for anti-lifting modules (*)
A6	I/O	-	Line K-Fiat tester
A7	OUT	-	Emergency switch with key: external supply
A8	OUT	0,03	Positive supply for volumetric modules (*)
A9	IN	2	Control unit earth
A10	I/O	-	Preparation for serial line (engine control unit) (*)
A11	OUT	0,06	External modules earth (*)
A12	IN	-	Alarm signal from external modules (low = alarm) (*)

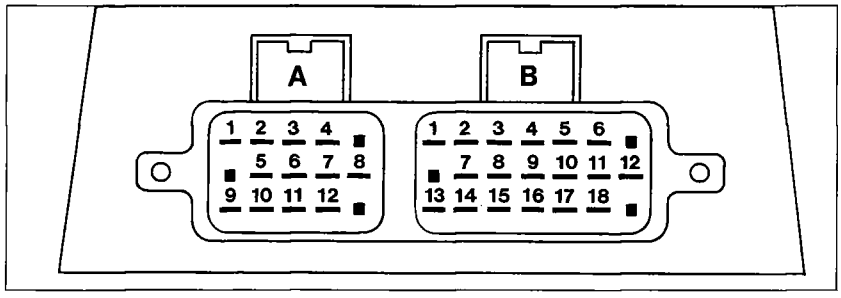

P4F42AL01

(*) Signals not used in this version of the system
n.a. : normally open
n.c. : normally closed

Signals entering and leaving the alarm control unit

CONTROL UNIT WIRING DIAGRAM

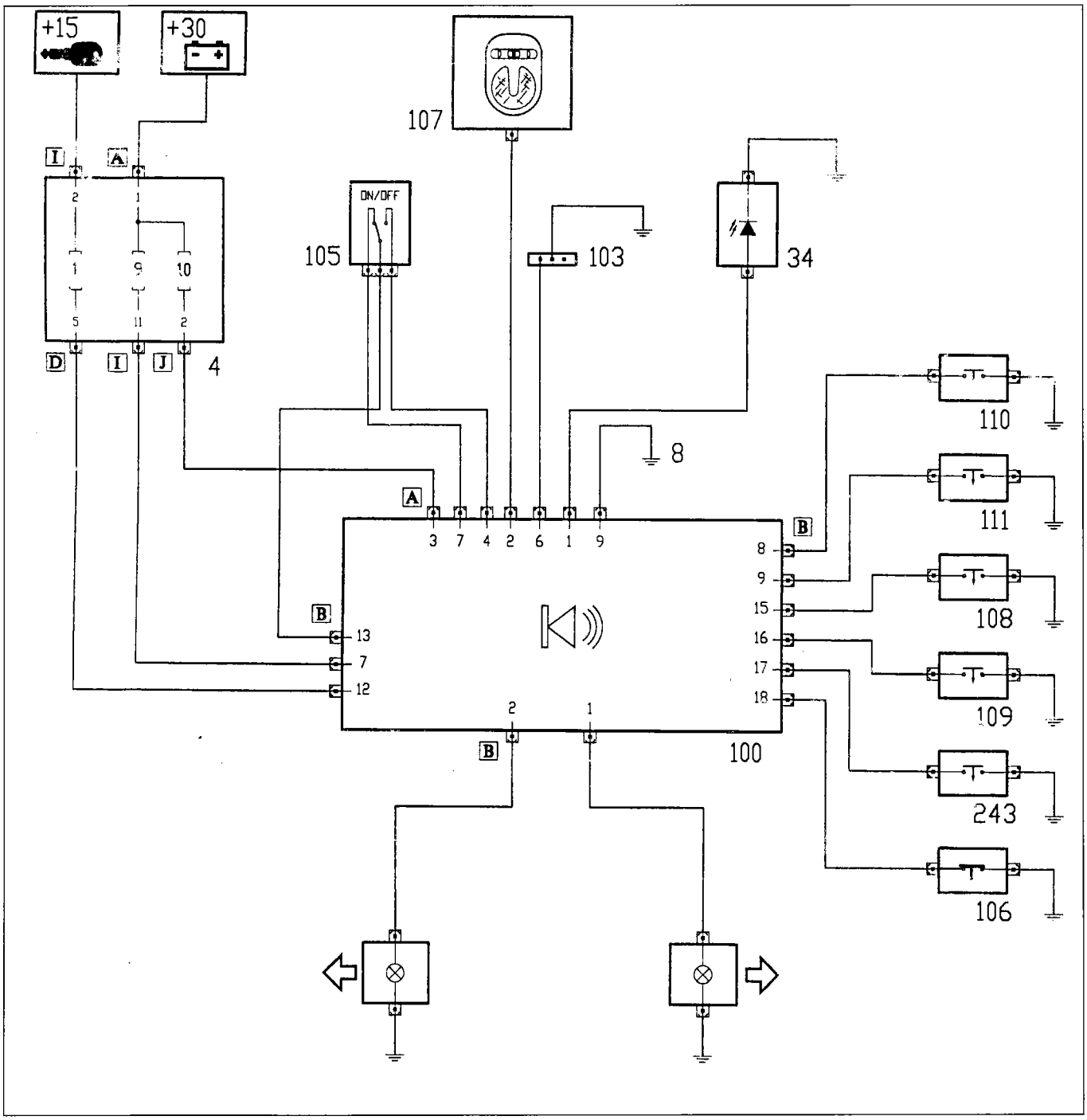

P4F131L01

4. Junction unit
8. Left front earth
34. LED
100. Alarm device electronic control unit
103. Diagnostic socket for alarm
105. Alarm device off switch
106. Switch detecting opening/closing of bonnet lid for alarm
107. Alarm receiver
108. Switch detecting opening/closing of left rear door for alarm
109. Switch detecting opening/closing of right rear door for alarm
110. Switch detecting opening/closing of left front door for alarm
111. Switch detecting opening/closing of right front door for alarm
243. Switch detecting opening/closing of boot lid for alarm

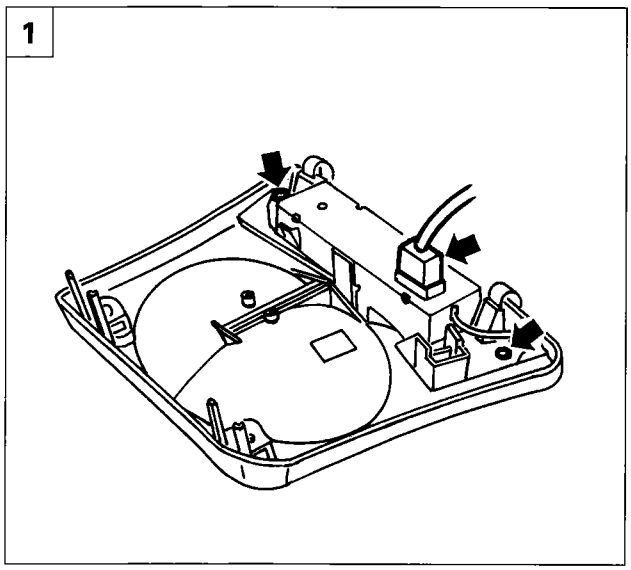

P4F132L01

REMOVING-REFITTING RECEIVER IN COURTESY LIGHT

- Disconnect the front courtesy light as described previously.

1. Disconnect the (white) connector shown and remove the receiver undoing the bolts fixing it to the courtesy light.

REMOVING-REFITTING ALARM CONTROL UNIT

Position the vehicle on a lift and remove the left wheel.

2. Undo the fixing bolts and remove the front section of the wheel arch liner.
3. Undo the fixing bolts and remove the remainder of the wheel arch liner.
4. Disconnect the electrical connections, undo the nuts shown and remove the alarm-siren control unit assembly from the vehicle, removing it from the metal protection.

NOTE *To refit, simply reverse the order of the operations carried out for the removal.*

NOTE *If only the alarm control unit is being replaced, the alarm system must be activated by programming at least one of the remote controls which come with the vehicle, following the description in the paragraphs on "SIMPLIFIED PROGRAMMING" and "PROTECTED PROGRAMMING".*

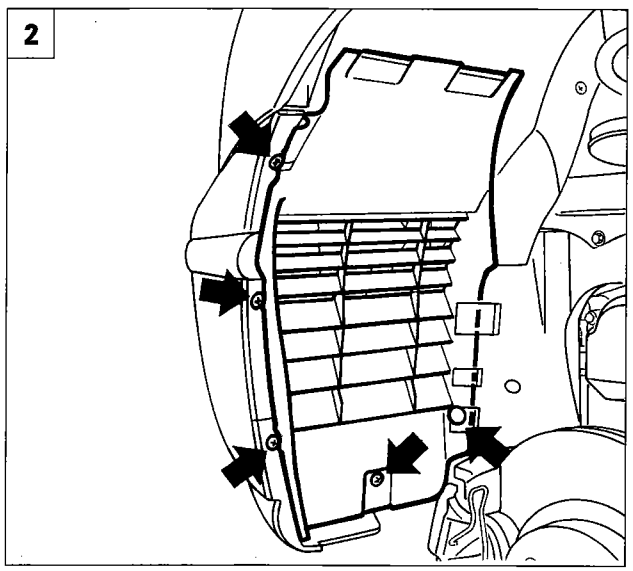

P4F132L02

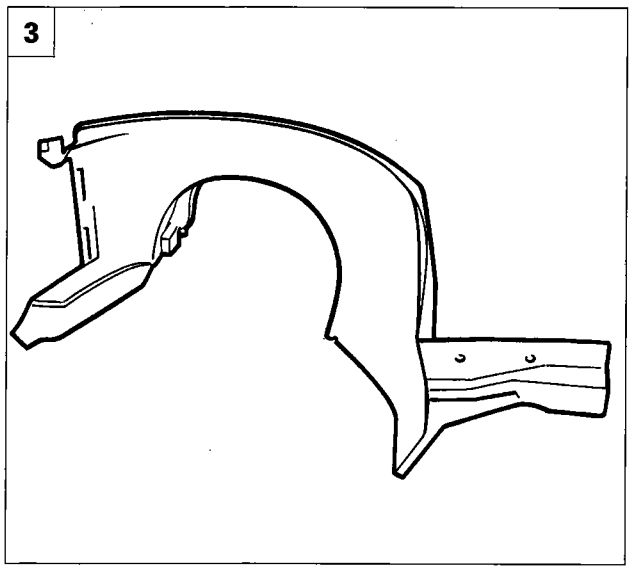

P4F132L03

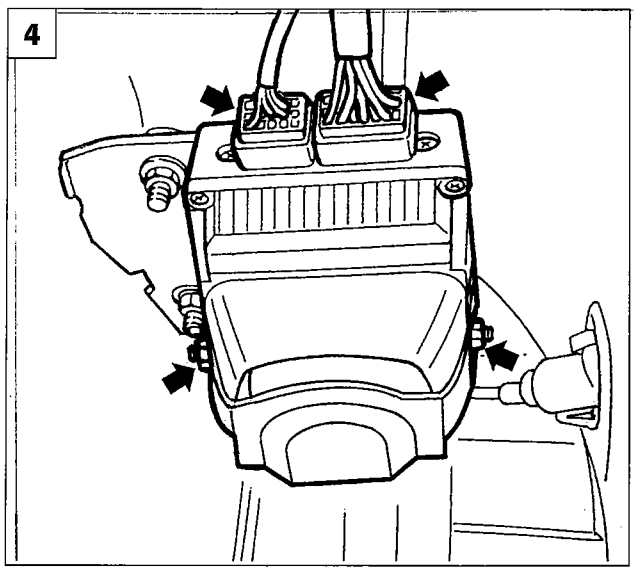

P4F132L04

INTRODUCTION

The car is equipped with a safety and electronic control system which, in the event of a crash, activates the Air Bags and seat belt pretensioners.
The**AIR BAG** is a passive safety device consisting of one or two cushions which, in a front-end crash, automatically inflate in between the occupants of the vehicle and the front structures of the interior compartment.
The seat belt**PRETENSIONER** is a pyrotechnic device integrated in the seat belt buckle which, in a front-end crash, recovers the inevitable lengthening of the belts caused by the weight of the person, while holding the person against the seat squab.

The system consists of the following parts:
1. Electronic control unit
2. Warning light on the instrument panel for indicating system faults
3. Driver's Air Bag module
4. Passenger's Air Bag
5. Socket for connecting FIAT/LANCIA TESTER
6. Air Bag fuse
7. Seat belt pretensioners

The electronic control unit, fitted with suitably calibrated deceleration sensors, detects the crash condition and, by means of an electric detonator, activates the reactions of a chemical compound which causes a compressed gas to expand.
This gas rapidly inflates the synthetic fibre cushions, one housed in the centre of the steering wheel and the other in the dashboard near the glove compartment.

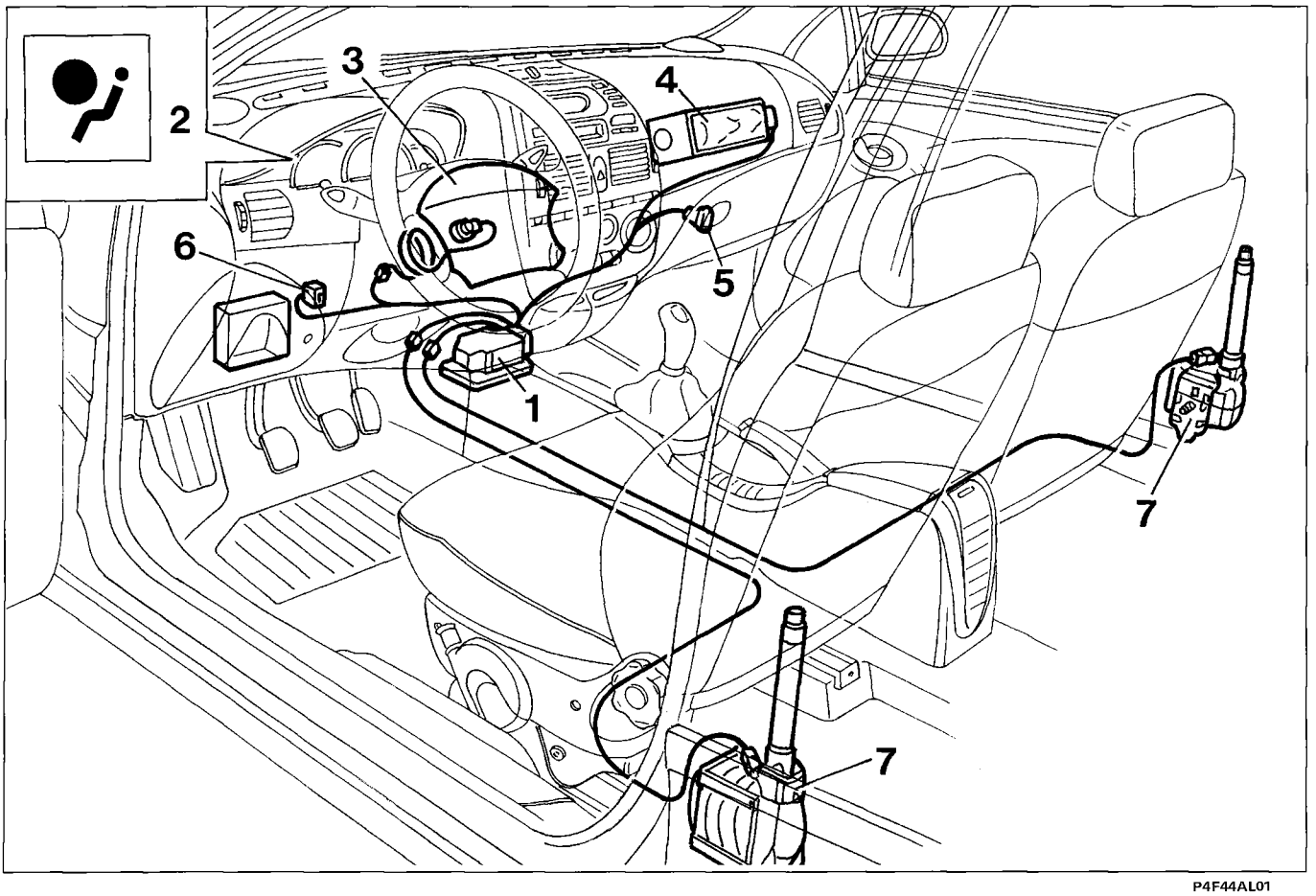

P4F44AL01

NOTE *The system's components are connected by specific wiring easily identifiable as it is YELLOW.*

55.

DRIVER'S AIR BAG MODULE

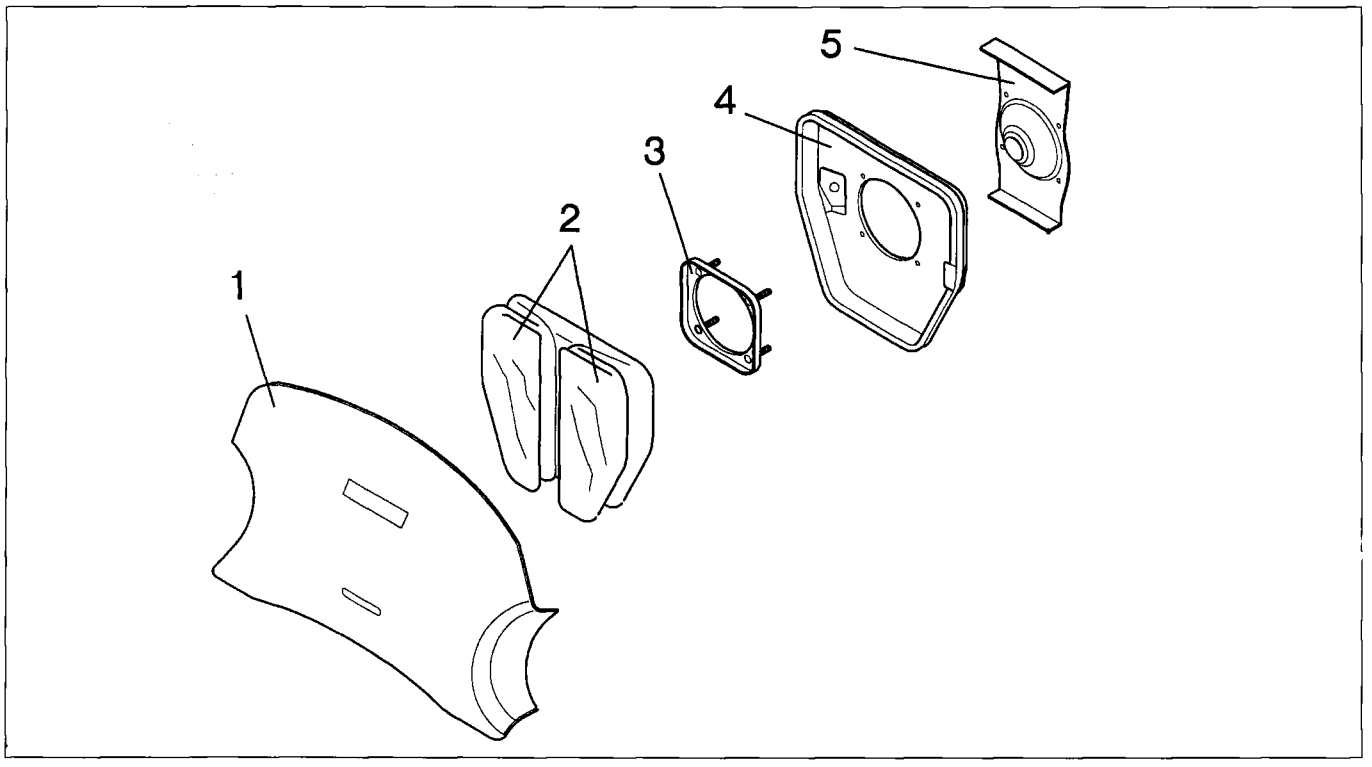

P4F46AL01

1. *Cover*
2. *Folded cushion*
3. *Mounting ring*
4. *Metal container*
5. *Inflation device*

The driver's Air Bag module consists of a metal container (4) for connection to the steering wheel, an inflation device (5), *a* cushion (2) and a cover (1) for enclosing the folded cushion.
The Air Bag module is installed in *a* seating inside the steering wheel by means of *a* metal interfacing plate.

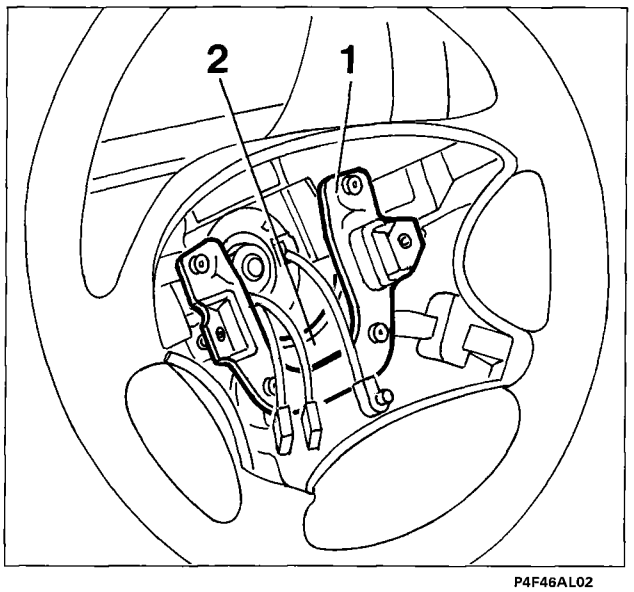

P4F46AL02

This plate (1) is connected by 4 springs to a counterplate (2) joined to the steering wheel reinforcement for the rocking horn control.

NOTE *The Air Bag module must be replaced 10 years after the installation date, which is shown on the label.*

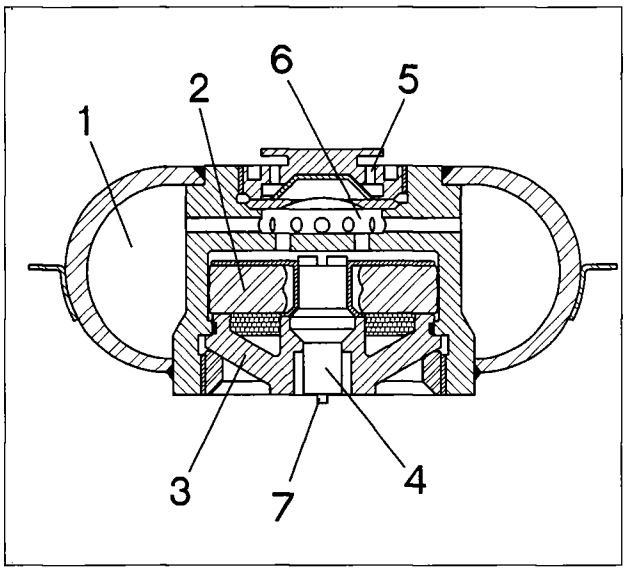

P4F135L01

1. *Gas (Argon and other gases)*
2. *"Tablet" of propellent*
3. *Gas generator*
4. *Trigger*
5. *Cushion inflation holes*
6. *Partition*
7. *Electrical connection*

INFLATION DEVICE

The gas generator (3) produces a significant increase in pressure causing the compressed gas (compressed to about 240 bar) contained in the chamber (1) to emerge and inflate the folded cushion through the holes (5). The generator is controlled by the trigger device (4).
The contact provided by the electrical connection (7) ignites the chemical substances contained in the trigger which in turn activate the chemical reactions of the propellent tablet (2): this causes a small explosion which shatters the partition (6) and allows the gas contained in (1) to emerge.
In the trigger circuit there are chemical substances which react with an electrical contact (true trigger) and others which activate the reactions of the propellent in the case of high temperatures (e.g. car catching fire): safety trigger. At one end of the inflation device there is the cushion, secured by a metal plate, near the holes (5). The volume of the fully inflated cushion is about 40 litres.

The module's cover keeps the cushion folded in its seating: when the Air Bag operates, the cover opens along the break lines determined at the design stage, the top and bottom parts separate to allow the cushion to emerge fully.

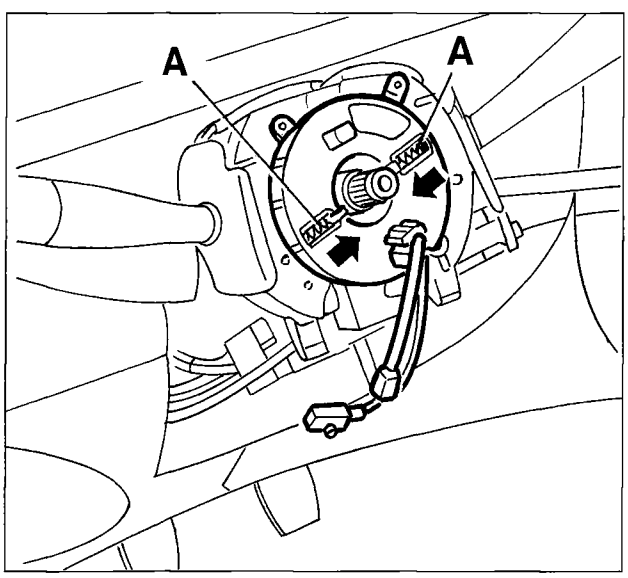

P4F47AL01

CLOCK SPRING

The clock spring installed on the stalk unit is the component of the safety system which constitutes the electrical interface between the driver's Air Bag and the Air Bag wiring.
This component is designed to ensure electrical continuity between module and control unit, irrespective of the angle of the steering wheel.

It also transmits the control signal for the horn and, if applicable, the additional signals to the radio.

*The device comprises a safety feature which, when the steering wheel is dismantled from the car, prevents the relative rotation between the top and bottom plates thanks to the springs (**A**) which close as shown in the figure.*

55.

PASSENGER'S AIR BAG MODULE

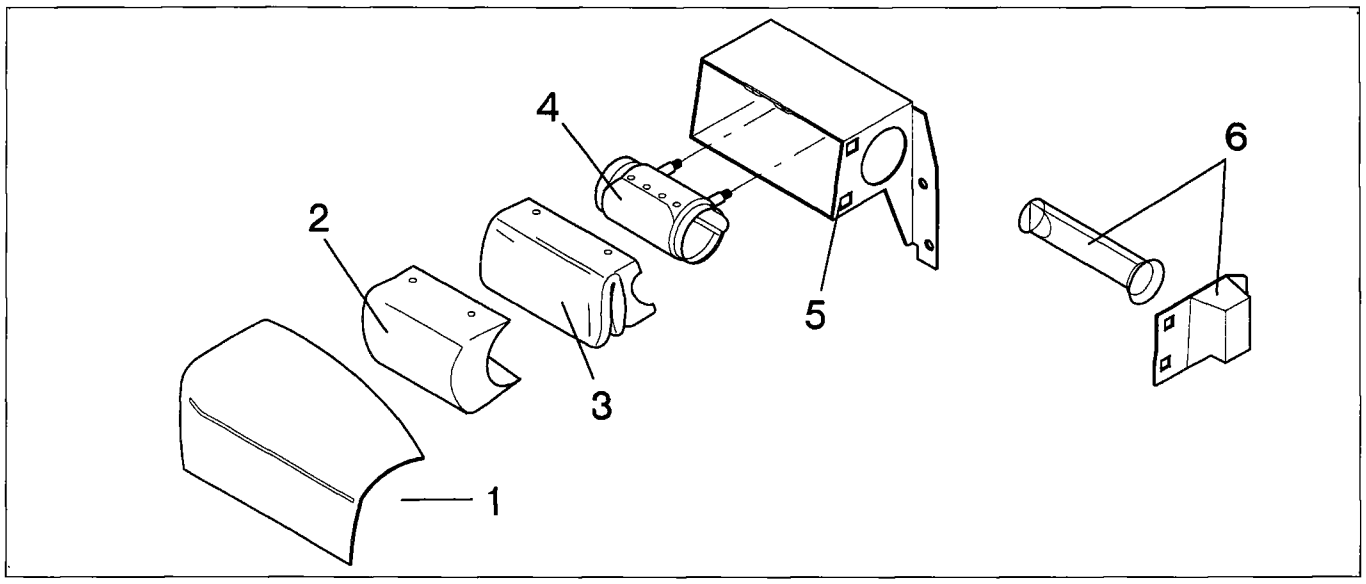

P4F48AL01

1. *Cover*
2. *Lining*
3. *Folded cushion*
4. *Sleeve*
5. *Housing*
6. *Inflation device*

The passenger's Air Bag module is the same as the driver's Air Bag in terms of composition and operation, differing only in its larger size. This module is mounted on the dashbaord by a metal bracket (5). The inflation device (6) consists of a steel cylinder which is larger than that on the driver's side, while the gas generator, trigger device and propellent tablet are the same as on the driver's module.
This reservoir is also filled with a mixture of Argon and other gases. The volume of the fully inflated cushion is about 90 litres.

NOTE *The Air Bag module must be replaced 10 years after the installation date, which is stated on the label.*

PRETENSIONERS

NOTE *When vehicles are fitted with an air bag, the pretensioners are electrically-controlled by the air bag control unit (as described below).*
For vehicles WITHOUT air bags, the pretensioners are MECHANICALLY CONTROLLED PYROTECHNIC DEVICES (see Group 70).

The seat belt PRETENSIONER is a device built into the reel. In the case of frontal impact, it takes up the inevitable lengthening of the seat belt caused by body weight in order to hold the body against the seat squab.
The seat belt must stay as close as possible to the body in order to ensure that the belt absorbs kinetic energy that the body assumes during impact.
If a seat belt fails to hold the body against the squab during impact, the causes of this failure are probably as follows :
- delayed activation of the inertia lock device;
- stretching of seat belt fibres;
- too much belt rolls out of the reel;
- thich garments create a space between belt and upper body.

If we add up all these reasons, it is easy to understand that the belt will only be effective once the body has moved forward to a certain extent.
PRETENSIONERS ARE FITTED TO BOTH FRONT SEATS BELTS. THEY MUST ALWAYS BE FITTED TOGETHER WITH AIR BAGS BECAUSE THEY FORM AN INTEGRAL PART OF AIR BAG OPERATION.

Components and operation

The pretensioner is a device built into the reel and activated by an electrical command from the control unit when the following conditions occur simultaneously:
- mechanical safety sensor closes as a result of deceleration due to frontal impact;
- a pretensioner detonation threshold stored in the control unit is exceeded.

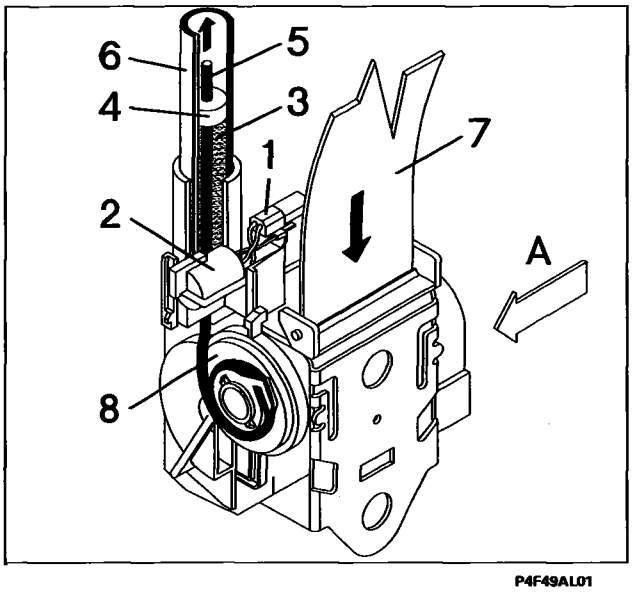

P4F49AL01

1. *Electrical connector*
2. *Gas generator*
3. *Gas (nitrogen)*
4. *Piston*
5. *Steel cable*
6. *Cylinder*
7. *Seat belt*
8. *Spring*

(Direction of motion)

When a given deceleration rate occurs, the control unit supplies the gas generator (2).
The gas pressure built up by the generator (2) applied to the surface of piston (4), generates a force which pushes it up inside cylinder (6).
Linear motion toward the top of piston (4), to which is fitted steel cable (5) whose end is fastened to the flange of coil (8), is converted into linear motion of the coil and belt (7) is therefore reeled in by a few centimetres.
The inevitable lengthening of the belts are taken up in this way and the occupant's body is held against the seat squab.

After any impact which sets off the pretensioners, it is necessary to REPLACE THE BELT IN ALL CASES

55.

ELECTRONIC CONTROL UNIT

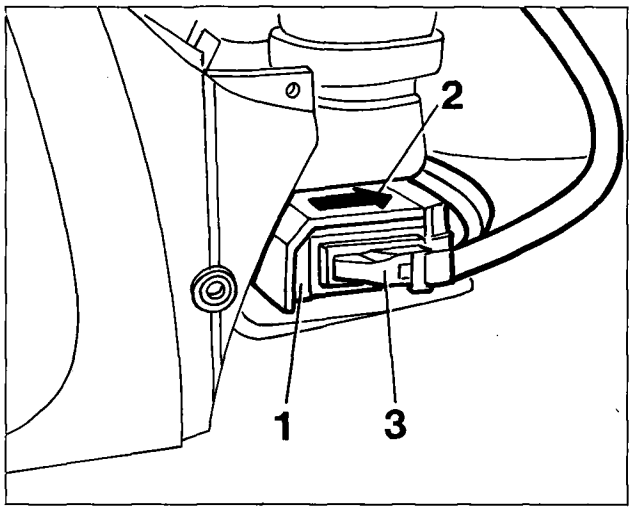

P4F45AL01

1. *Electronic control unit*
2. *Arrow showing control unit fitting direction*
3. *30-way connector*

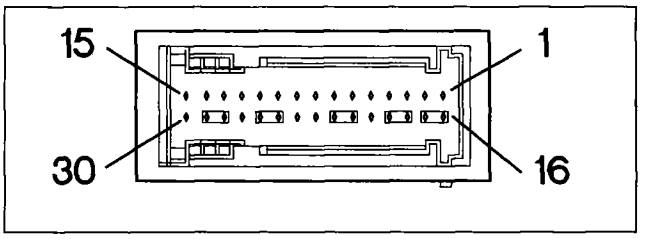

P4F45AL02

The control unit must be positioned with arrow (2) facing in the vehicle's direction of motion.

N°	FUNCTION	N°	FUNCTION
1	Driver's side air bag (-)	16	Driver's side air bag bridge (-)
2	Driver's side air bag (+)	17	Driver's side air bag bridge (+)
3	Passenger side air bag (-)	18	Passenger side air bag bridge (-)
4	Passenger side air bag (+)	19	Passenger side air bag bridge (+)
5	N.C.	20	N.C.
6	Passenger side pretensioner (+)	21	Passenger side pretensioner bridge (+)
7	Passenger side pretensioner (-)	22	Passenger side pretensioner bridge (-)
8	Earth for Fiat Lancia Tester	23	N.C.
9	Serial line (K) for Fiat Lancia Tester	24	N.C.
10	Driver's side pretensioner (+)	25	Driver's side pretensioner bridge (+)
11	Passenger side pretensioner (-)	26	Driver's side pretensioner bridge (-)
12	N.C.	27	N.C.
13	Fault warning light	28	Fault light bridge
14	Control unit earth	29	Control unit earth bridge
15	Control unit supply (+15)	30	N.C.

The electronic control unit is locataed beneath the central vehicle console and fastened rigidly to the floor.
It is fitted with a 30 pin connector (3) for connection to the electrical system.
It is supplied with 12V when the ignition key is turned to MAR, but can still operate for about 150 ms after the power supply is cut off due to impact.
This is made possible due to the presence of a buffer condenser contained inside the electronic control unit. This accumulates sufficient electrical energy to ensure normal control unit operation and to generate a pyrotechnical charge detonation signal.
Air bag operation is therefore still ensured even if the impact causes a system power cut (e.g. battery damage or breakage, supply lead breaks).

NOTE *This safety function is activated only for air bags and NOT for pretensioners which do not go off in the case of a power cut.*

Inside the control unit there is an accelerometric sensor whose signal, suitably processed by a microprocessor, allows the severity of a crash to be detected, and so the activation of the pretensioners and Air Bags to be decided.
A second sensor with safety functions gives the enablement for activation of the Air Bags.

There are two different activation thresholds: a high one for the Air Bags (both of which intervene together), and a low one for the pretensioners on the right and left seats.

Fault memory

While the car is driving, the electronic control unit constantly conducts a fault diagnosis of the system, thus checking the continuity of the circuits and its components.
A detected fault is memorized and at the same time the "Air Bag" fault warning light on the instrument panel comes on.
The fault memory can be consulted during Servicing by connecting the FIAT/LANCIA TESTER or other diagnostic instruments to the diagnostic socket (see description below).

Crash memory

As mentioned, the control unit's microprocessor carries out complex calculation and check algorithms on the signal coming from the accelerometric sensor, and recognizes the severity of a crash. Depending on the level of severity detected, and with the enablement of the safety sensor, it sends an activation signal to the pretensioners and Air Bags.
This order of activation is memorized in a special crash memory, which contains the information relating to intervention thresholds being exceeded and the enablement of the safety sensor.

Replacing the control unit

In the case of a crash which has caused **the activation of the complete system** (Air Bags and pretensioners), it is not possible to delete the record of the crash from the control unit's memory, so it is *always* necessary to replace the control unit.
In addition, the warning light on the instrument panel stays on permanently.
However, if **only the pretensioners** are activated, the memory can be deleted ***twice***. Only in the case of a third activation does the control unit have to be replaced.

PAGE
140
IS CANCELLED

PAGE
141
IS CANCELLED

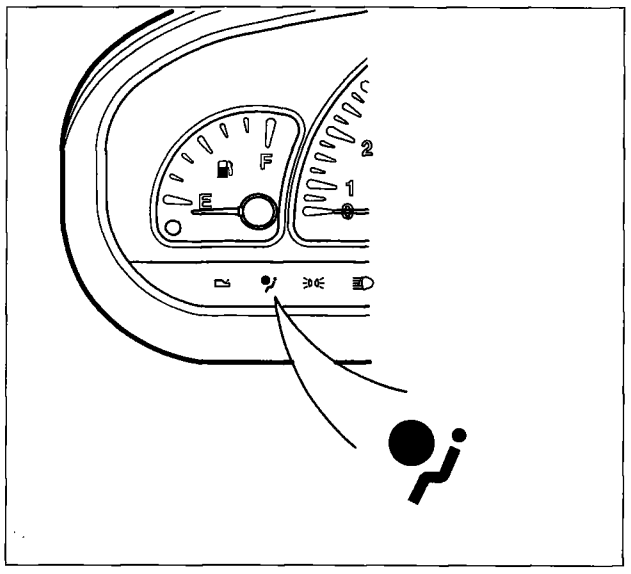

P4F142L01

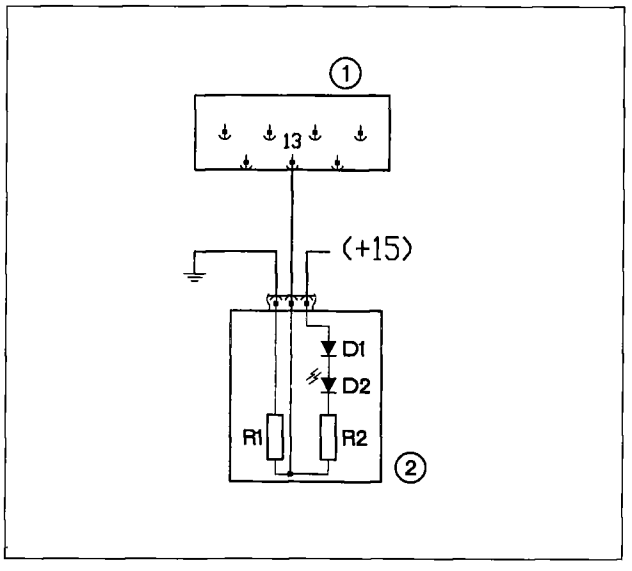

P4F142L02

D1: protective diode
D2: warning light
R1, R2: load resistors
1: Air Bag control unit
2: warning light integrated circuit

AIR BAG WARNING LIGHT

The Air Bag warning light on the instrument panel is supplied via the ignition switch when the ignition is on, and is earthed through the electronic control unit.

When the ignition is switched on, the Air Bag warning light comes on for about 4 seconds (test stage).
The driver should always check that the warning light comes on; if it does NOT come on or does NOT go out after 4 seconds, this means there is a fault in the Air Bag. If the electronic control unit detects a fault during the self-test it conducts to check the correct operation of the entire system, it commands the immediate lighting up of the Air Bag warning light.
Once the fault has been indicated, the warning light stays on until the fault has been repaired and deleted from memory.
It should be remembered that, as previously described, the warning light comes on when the system intervenes for only the pretensioners and for the Air Bags.
The Air Bag warning light is of the so-called "INTELLIGENT" type: not only does it come on when instructed to do so by the control unit which sends a fault or alarm signal to the instrument panel, but it also comes on if a faulty connection or short circuit to earth between the control unit and instrument panel is detected. This is achieved by means of a small circuit illustrated in the figure: the warning light is LED D2 and it comes on if an earth signal arrives from the control unit (1) or if the connection is broken or shorting to earth.

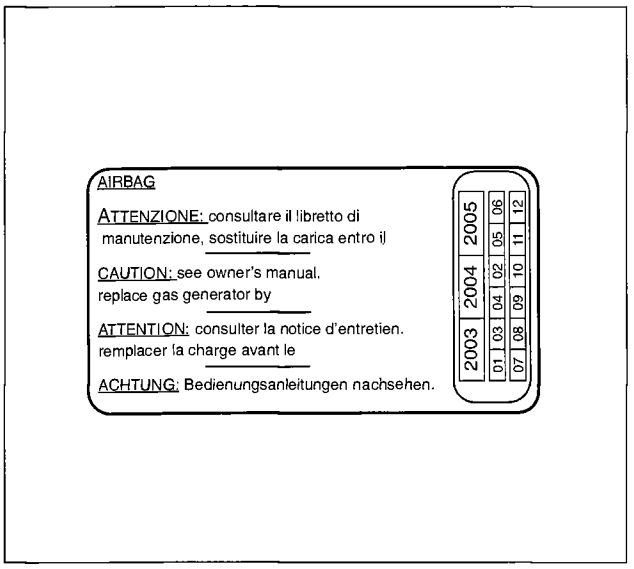

P4F143L01

LIFE OF THE SYSTEM COMPONENTS

The life of an Air Bag module or pretensioner is 10 years (see expiry date on the specific plate). On expiry, it should be replaced.
Then fit a new plate with the up-dated expiry date (by marking the month and year in indelible ink or by perforations to indicate the date).

SELF-TEST

To ensure that the system is working and to detect any faults, the control unit subjects the entire system to a self-test.

Self-test when ignition is switched on

The initial tests of the system are carried out. This part of the self-test is completed 4 seconds after the ignition has been switched on.

Self-test during normal operation of the system

During this stage, tests are carried out repeatedly every 10 ms (check on battery voltage of energy reserve, accelerometers, ignition circuits, etc.).
To indicate that the system is functioning correctly, the Air Bag warning light on the instrument panel comes on for the first 4 seconds and goes out if no faults are detected. This warning light comes on during driving if faults are detected during operation of the system.

Activations of the system following a fairly severe crash are also memorized by the control unit.

FAULT DIAGNOSIS

Fault diagnosis may be conducted using the FIAT-LANCIA TESTER or other diagnostic systems.

Diagnosis with Fiat Lancia Tester

The Fiat-Lancia Tester allows data to be transferred outside, i.e. for the contents of the Air Bag control unit's memory to be read: faults and production data.
Faults memorized in the control unit may be deleted, after the fault has been repaired, by means of the FIAT/LANCIA TESTER or other diagnostic instruments.

During fault diagnosis, if it is necessary to carry out continuity measurements on the module lines, it is essential to disconnect the modules from the wiring and replace them with the special simulation resistors.

PAGE

144

IS CANCELLED

WIRING DIAGRAM

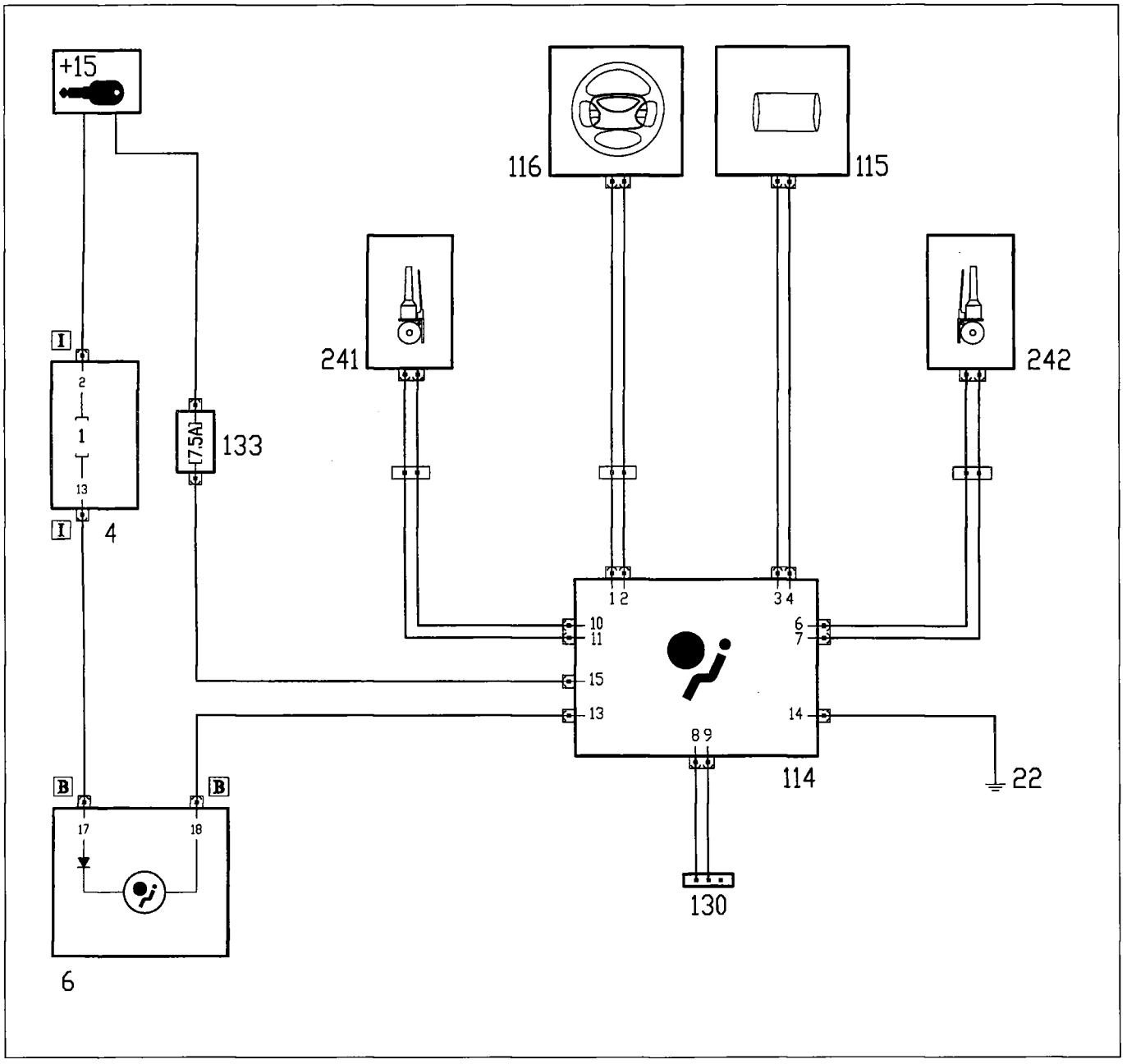

4. Junction unit
6. Instrument panel
22. Left hand facia earth
114. Air bag electronic control unit
115. Passenger air bag
116. Driver air bag
130. Tester socket for air bag
133. 7.5 A air bag system fuse
241. Left pretensioner
242. Right pretensioner

SAFETY PRECAUTIONS TO BE OBSERVED WHEN WORKING ON VEHICLES FITTED WITH AN AIR-BAG SYSTEM

*The following regulations **MUST ABSOLUTELY BE OBSERVED** during any operations carried out on vehicles fitted with an air bag.*

OPERATIONS ON VEHICLE

Note that air bag modules are devices which should be handled with care. Their use, transport and storage are governed by the legal regulations covering explosives applicable in the country where the vehicle is sold.

Before beginning to carry out:
- repairs to the body;
- welding work;
- work where it is necessary to remove the air bag modules, the pretensioners or the control unit.

A Turn the key to STOP and remove. Disconnect the battery, i.e. DISCONNECT TERMINALS (- and +) from their respective poles and THOROUGHLY INSULATE using tape.
B Disconnect the control unit connector and wait for at least 10 minutes after removing the battery.
C If an air bag inflation device is removed, stricly observe the following procedure:

1. Wait for at least 10 minutes after disconnecting the battery before beginning to remove the module.
2. Unscrew the bolts fastening.
3. Disconnect the inflation device plug.
4. Replace the devices with the cover facing up, in a locked steel cabinet. This cabinet is designed solely for this purpose and should never be used to store other types of materials, particularly if inflammable. The cabinet must be designed to store pyrotechnic charges (steel, impact-resistant cabinet with grates to allow natural ventilation inside). It must be marked in accordance with current legislative requirements (DANGER EXPLOSIVES - DO NOT USE NAKED FLAMES - NOT TO BE OPENED BY UNAUTHORIZED PERSONNEL).

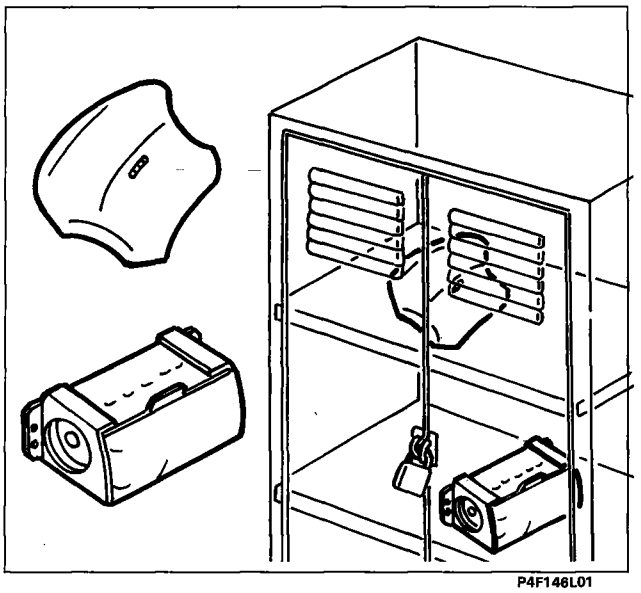
P4F146L01

NOTE *All the connectors used and wiring on the air bag modules contain a short-circuit clip. Until the air bag modules are connected to a power source with the appropriate characteristics by a suitable connector, the units cannot be activated incorrectly.*

Any system component NOT activated in the case of an accident should be considered still active. Components which fail to explode due to defects, because they are out of warranty or require changing for other reasons must be returned to the appropriate centre by using the procedure described below.

The components of the safety system must be dismantled and refitted ONLY by skilled and authorized technical staff.
The failure to observe the following instructions could lead to accidental activations of the system, personal injury or unnecessary repairs of the system.
IT IS STRICTLY NOT PERMITTED TO DISMANTLE THE AIR BAG MODULES INTO THEIR COMPONENTS.

NOTE *All the system's components have been designed specially to operate in a specific make and model of car, so the modules or pretensioners must not be adapted, reused or installed on other cars, only those for which they have been designed and manufactured.*
Any attempt to reuse, adapt or install them on another type of car could cause injury to the occupants of the car in the event of a crash.

Replacing Air Bag (because of a fault or expiry of the guarantee period)

In the case of replacement of an Air Bag module because of a fault or expiry of the guarantee period:

1. Remove the adhesive label from the new module, affix it in a special file (load/discharge register) with the car's data (chassis no., date of registration, model, etc.) and add the serial number of the old module. The file with the recorded data must be kept for future reference.
2. Before glueing the plate on top of the existing plate, it must be perforated to indicate the month and ten years following the date of fitting the module (e.g. 2006 will correspond to 1996).
3. Connect the module to the connector emerging from the steering wheel.
4. Fit the Air Bag module into its seating in the steering wheel, checking that the connecting cable is positioned correctly, and tighten the bolts to the specified torque.

Replacing control unit

The electronic control unit must ALWAYS be replaced in the case of a crash involving total activation of the safety system (Air Bag modules + pretensioners).

Under no circumstances should any attempt be made to reuse the electronic control unit.

If the control unit is replaced, remove the adhesive label from the control unit and affix it in the special file in accordance with the above-mentioned procedure.

NOTE *After carrying out interventions on the system, check that it is working by means of the PIAT/LANCIA TESTER.*

Interventions after an accident

If any component of the safety system is damaged following an accident, it MUST be replaced.
Do not attempt to repair the control unit, clock spring or Air Bag modules.

Accidents with or without activation of the Air Bag system

Some components of the safety system should be inspected both if the system has been activated and if it has only partially or has not been activated.
These components are:
- steering column;
- steering column mountings;
- area of attachment of electronic control unit and modules;
- clock spring;
- dashboard (in area of passenger's air bag module).

The component must be replaced if it distorted, broken or bent.

Accidents with activation of the Air Bag system

Some components of the safety system must be replaced if the car has suffered a front-end collision involving the total or partial activation of the safety system.
In the case of partial activation (only pretensioners), these components are:
- pretensioners;
- electronic control unit (must be replaced only after the third activation of the pretensioners).

In the case of total activation of the safety system, these components are:
- Air Bag modules;
- pretensioners;
- electronic control unit.

As regards the wiring and connectors, these must be inspected in order to identify any signs of burns, melting of the outer insulation or damage due to excessive heat.
If there are any signs of damage on the clock spring and area of attachment of the electronic control unit and Air Bag modules, the damaged components must be replaced.

Paintwork tasks

There are no particular safety measures to be taken for paintwork tasks followed by oven drying, as the safety system (Air Bags and pretensioners) as a whole has been designed not to be damaged when the external surfaces of the car are heated up by normal paint drying systems.

Do not use naked flames near the modules.
All the electronic control units (including that for the Air Bag system) should nevertheless be removed if their temperature in certain environments could reach or exceed 85°C).

RISKS TO HEALTH

The following precautions should be observed when handling activated Air Bag modules:
1. Wear protective gloves and safety goggles.
2. After touching triggered Air Bag units, wash your hands and exposed parts of the body with soap and water.

EFFECTS OF OVEREXPOSURE

There is no potential risk of exposure to the propellents, as the system is totally sealed.

The propellent mixture is in the solid state, so inhalation is impossible even in the event of breakage of the gas generator cartridge.
If gas leaks out, there is no risk to human health.
Nevertheless avoid contact with the skin and do not swallow the propellent.

In the case of
- ***Contact with the skin:*** *wash immediately with soap and water.*
- ***Contact with the eyes:*** *wash the eyes immediately in running water for at least 15 minutes*

- ***Inhalation:*** *take the victim out into the open air immediately*
- ***Ingestion:*** *induce vomiting if the person is conscious.*

In these circumstances always seek medical attention.

SAFETY INSTRUCTIONS IN HANDLING THE AIR BAG MODULES

Under normal conditions, the driver's and passenger's Air Bags are activated by the action of the electronic ignition control during the crash. The gas which develops under these conditions is mainly Argon, which is not toxic.
It is important for the staff who carry out interventions on the device fitted to the vehicles to strictly observe the safety instructions listed below.
The staff who intervene on the devices must be properly trained.

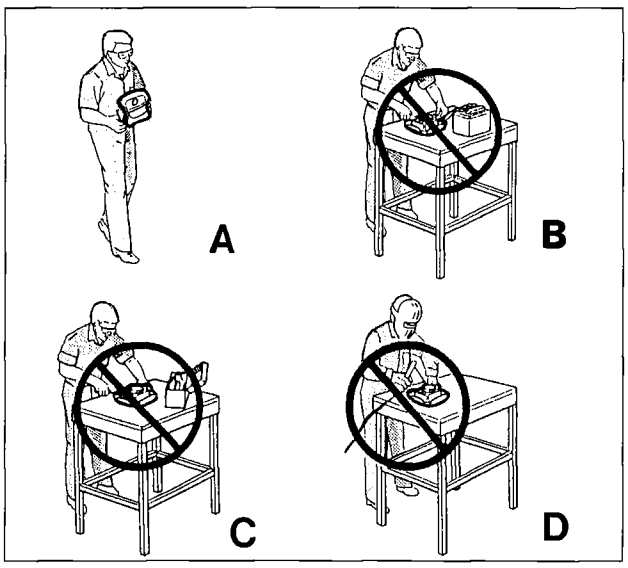

P4F150L01

- When removing and replacing open (exploded) Air Bags, handle only one module at a time and wear gloves and goggles during removal.
  On completing the operations, wash your hands thoroughly with soap and water, and in the case of contact of the residual powders of the device with the eyes, rinse immediately with plenty of running water.
  The metal components of an Air Bag which has just exploded are very hot. Avoid touching these components for some minutes (about 20) after the Air Bag has been activated.

A During removal and replacement of UNEXPLODED Air Bags, always rest the Air Bag module with the opening flap and pre-break groove facing upwards. Do not put anything on the flap.

B Under no circumstances supply the Air Bag module with electrical current.

Continuity measurements must not be carried out on components of the system until the modules have been replaced with simulation resistors

C Do not repair the Air Bag modules. Send all faulty modules back to the supplier.

D Do not subject the Air Bag module to heating, for example welding, hammering, drilling, machining, etc.

- Never install in the car Air Bag units which have been dropped or which show signs of any kind of damage.
- The Air Bag modules must not be kept with flammable or combustible material.
- The gas generators must not come into contact with acids, fats and heavy metals: contact with such substances could cause the creation of poisonous or harmful gases or explosive compounds.
- Spare parts must be stored in their original packaging and their temporary storage must follow the same procedure as for an Air Bag module removed from the car and not activated, i.e. a specially-allocated locked metal cupboard must be used (impact-proof metal cabinet with grilles to permit natural internal ventilation). The cabinet must bear special signs (DANGER EXPLOSIVES - DO NOT USE NAKE FLAMES - NOT TO BE OPENED BY UNAUTHORIZED PERSONS).

- On all versions with Air Bags, staff carrying out interventions must not work from the front seats without first rendering the system inoperative by switching the ignition off and removing the key, disconnecting and isolating the battery and finally waiting 10 minutes.
- If for exceptional atmospheric events (flood, high tides, etc.) water and mud reach a height which affects the components of the device, they must be replaced.

DISPOSING OF USED AIR BAG MODULES

Air bag modules fitted on the vehicle must not be demolished with the vehicle, but removed beforehand. Air bags cannot be scrapped without first being set off.
If an air bag module has not gone off for any reason during an accident, the device must be considered still set to go off. All unexploded material must therefore be sent to GEMCA of Chivasso, with the following wording on the delivery note:
"AIR BAG/PRETENSIONER DEVICE CONTAINING PYROTECHNIC CHARGE TO BE DE-ACTIVATED".

Devices must be sent to GEMCA in the same packing/boxes in which the parts were received. If the original packing is not available, packs alone can be ordered from the Volvera Parts department.
Naturally, whenever AIR BAG - PRETENSIONERS are changed, the original pack should be saved intact so that the unactivated device can be forwarded to GEMCA.

Foreign markets

In the case of foreign markets, check local legislation and inform the dealer network.

Failure to respect the procedures listed above may lead to unwarranted air bag detonation and personal injury. Un-activated air bags must NOT be disposed of using normal refuse collection procedures. Unactivated air bags contain substances dangerous to the health which may cause personal injury if the sealed container containing the unit is damaged during disposal. Failure to observe this procedure when disposing f air bags may lead to a breach of current legislation.

Ordering procedure

If necessary, devices may be ordered as required from the Parts After-sale department in Volvera using only the depannage procedure because Dealers should not hold a stock of such parts. In any case, during internal handling they should be entered in a charge/discharge register which shows module identification numbers and vehicle data (chassis no., registration data, model etc.)

NOTE *For foreign markets, check the local legislation and inform dealer accordingly.*

SAFETY REGULATIONS FOR HANDLING PRETENSIONERS

Pretensioners are made out of explosive material and they should be handled, transferred and stored properly in order to avoid any damage or injury.
Under normal conditions, pretensioners are activated only upon an electronic detonation command issued during impact. During activation, small quantities of gas are produced which mainly consist of nitrogen, a non-toxic gas.

The following rules must ABSOLUTELY be observed to ensure the safety of operators and the condition of the belt/pretensioner assembly. Before each repair, turn the key to STOP, remove and disconnect the battery; wait for 10 minutes before disconnecting the pretensioner connectors.

Any pretensioner not activated during an accident should be considered still active. Any pretensioner undetonated due to a defect, because it is out of warranty or for other reasons for which repair is required, must be returned (whole device) to the apprropriate centre using the same procedure described for air bag modules.

The device must absolutely be replaced if due to exceptional atmospheric conditions (floods, high tides etc.), water and mud reach the height of device components.
Pretensioners do not require any maintenance and must never be lubricated. Any attempt to modify their original conditions will render them inefficient.

Copyright Fiat Auto

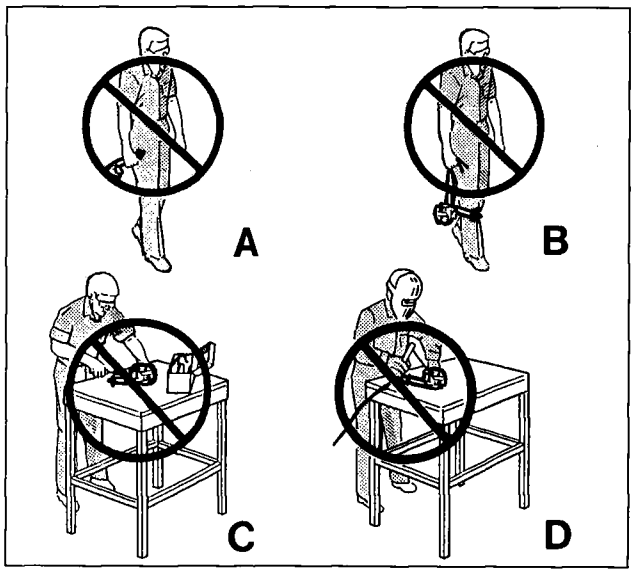

P4F152L01

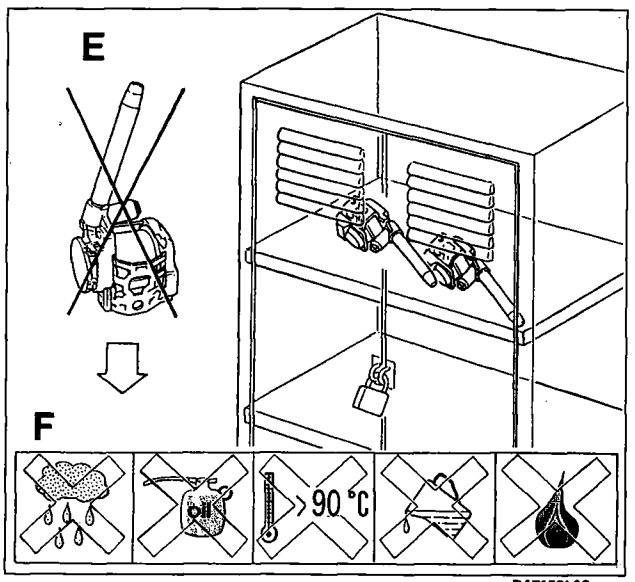

P4F152L02

A Never move pretensioners by holding them by the pipe.
B Never move pretensioners by holding them by the belt.
C Never tamper with pretensioners or attempt to repair them. Send all defective pretensioners back to the supplier.
D Never subject pretensioners to percussion, drilling, machining or heating due to welding.
E Never allow the unit to drop or subject to impact. Pretensioners which have been dropped from a height greater than 1 metre must not be used but sent back to the supplier.
When operations carried out on a veicle require temporary removal, use a steel cabinet which meets legal requirements to house the explosive charges (see box indicated for air bag modules).
F Never bring naked flames, liquids, solvents or lubricants close to the device and do not expose to a temperature higher than 90° C. With temperatures higher than 165° C, the gas generator may self-ignite.
When handling a device which has been activated, use gloves and protective goggles.
If the device has gone off, ALWAYS leave at least1 30 minutes following activation before touching the device.
Wash hands with soap and water after handling the device.

Ordering procedure

Follow the same procedure described for air bag modules.

Scrapping pretensioners

Follow the same procedure indicated for air bags.

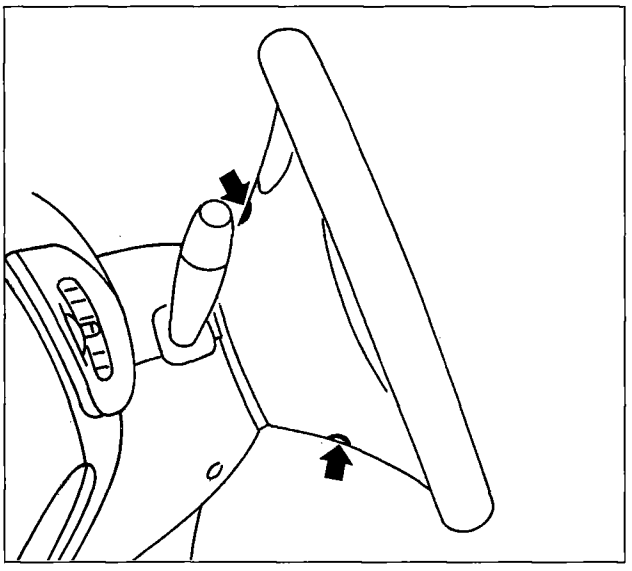

P4F153L01

REMOVING-REFITTING *DRIVER'S* AIR BAG

Always fit and remove air bag modules with the ignition key turned to "STOP" and removed, and with the battery positive and negative leads disconnected and insulated. Wait 10 minutes before carrying out the following operations.
OBSERVE ALL SAFETY REGULATIONS DESCRIBED PREVIOUSLY.

- Unscrew both hexagonal headed socket screws indicated: turn the steering wheel as shown in the figure to gain accesss to the screws.

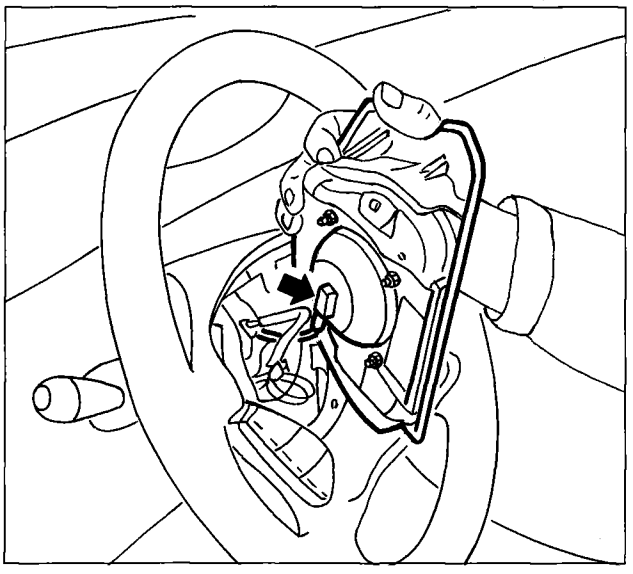

P4F153L02

- Move the air bag module slightly to one side: carefully disconnect the connector shown, taking care not to pull by the lead but the connnector body. Then remove the air bag module and place on a work bench with the cover turned up.

NOTE *For safety reasons, the two terminals short-circuit automatically when the module connector is disconnected. A special spring-loaded device connects the two terminals.*

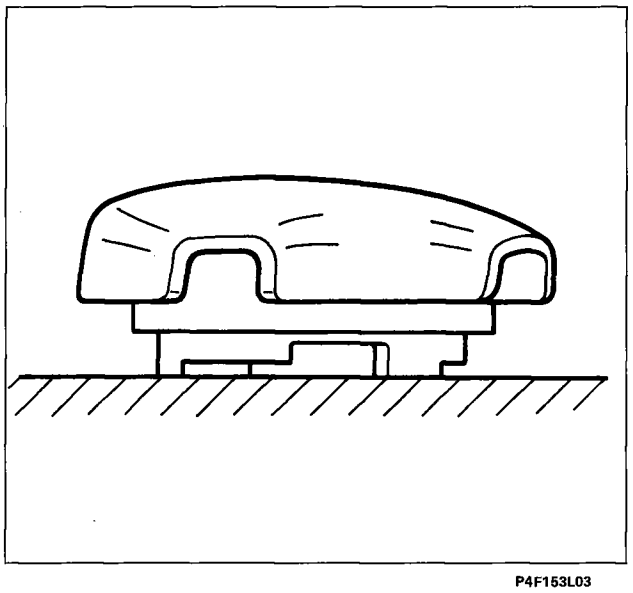

P4F153L03

- Replace the module in a cabinet as described previously. The correct module position is shown in the figure.

NOTE *Reverse order of removal operations to refit.*

NEVER CONNECT THE BATTERY UNTIL FITTING HAS BEEN COMPLETED CORRECTLY.

NOTE *After the operation, check system operation using a FIAT/LANCIA TESTER.*

Copyright Fiat Auto

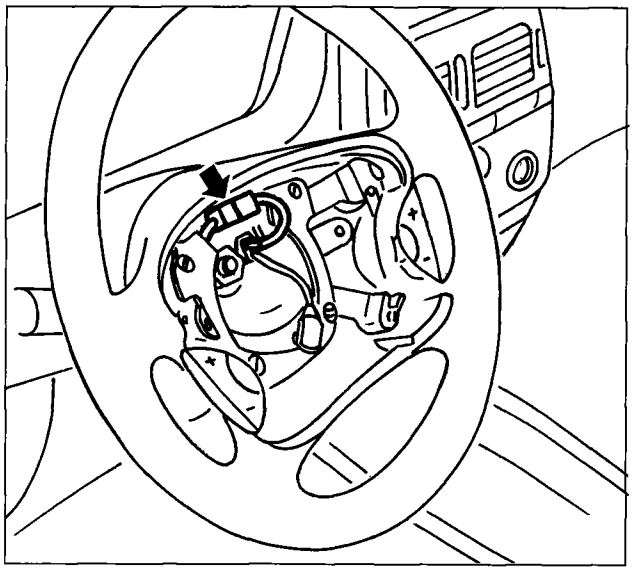

P4F154L01

REMOVING-REFITTING WATCHSPRING

- Remove the driver's side air bag as described on the previous page. Observe the SAFETY REGULATIONS indicated.

All the following operations must be carried out with the WHEELS ALIGNED WITH THE CAR'S LONGITUDINAL AXIS (wheels straight). If necessary, lock the steering column).

- Remove the horn control connector from its housing and disconnect, then remove the steering wheel.

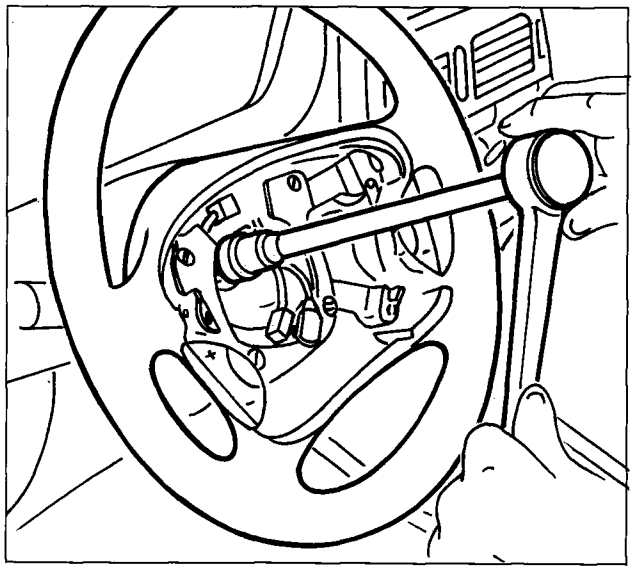

P4F154L02

- Unscrew the nut retaining the steering wheel to the steering column.

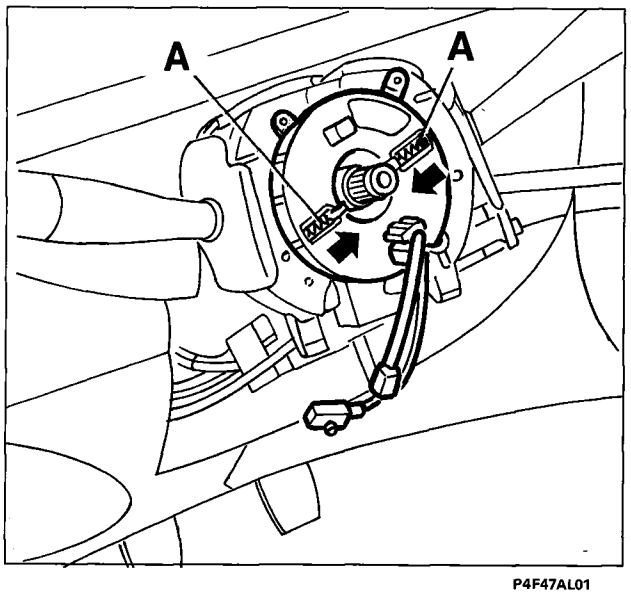

P4F47AL01

- Mark the position of the steering wheel hub in relation to the steering column and remove the steering wheel.

During this operation, take care NOT TO STRIKE THE STEERING WHEEL.

The device is equipped with a safety catch which prevents the upper and lower plates from turning in relation to one another when the steering wheel is not fitted on the car due to the actions of springs (A) which close as shown in the figure.

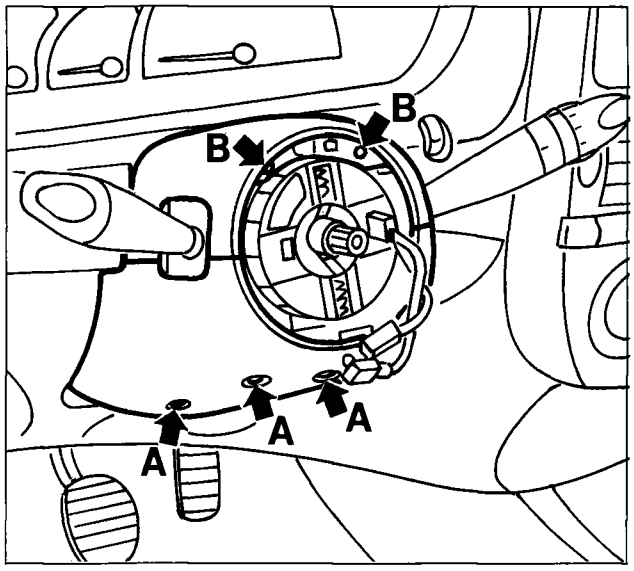

P4F155L01

- Unscrew bolts (**A**), then remove the lower trim. Unscrew bolts (**B**), then remove the upper trim.

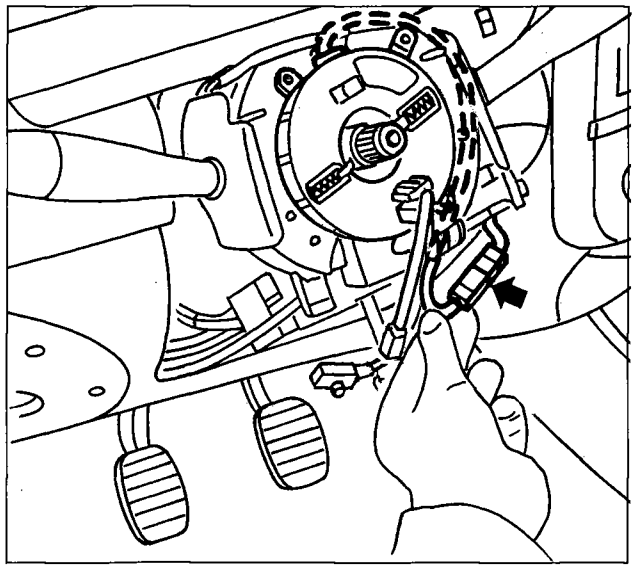

P4F155L02

- Disconnect the connection connecting the watch spring to the air bag lead (yellow)).

- Unscrew the three watch spring bolts and then remove.

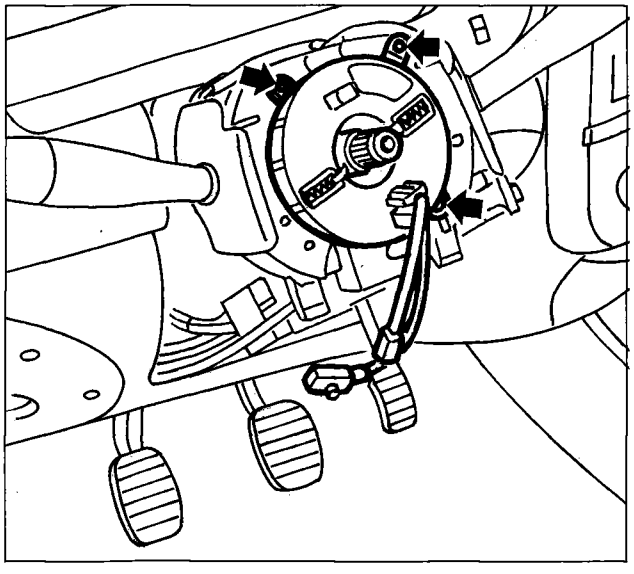

P4F051L01

Once the steering wheel has been removed, the watch spring remains locked and will not allow the upper and lower plates to move in relation to one another.
If the upper watchspring lead should turn in relation to the lower for any reason, so that it is no longer possible to identify the position upon removal, THE WATCHSPRING MUST ABSOLUTELY BE REPLACED.

Reverse order of removal operations to refit. When refitting the steering wheel, tighten the retaining nut (specified torque of 5 daN).

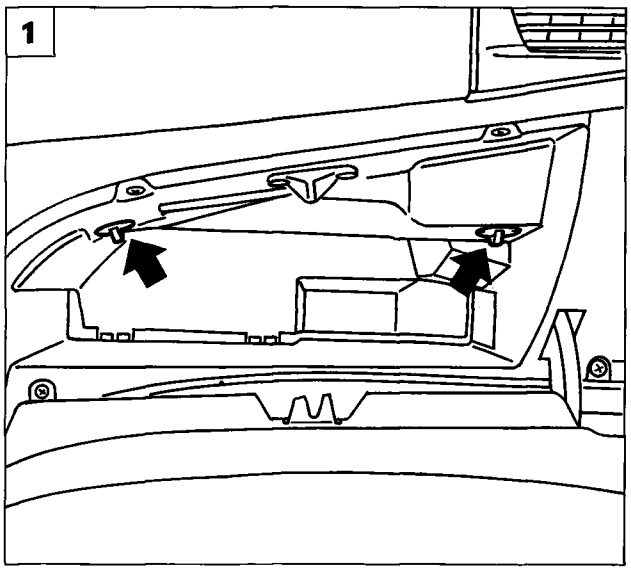

P4F156L01

REMOVING-REFITTING PASSENGER AIR BAG

Always fit and remove air bag modules with the ignition key turned to "STOP" and removed and with the battery positive and negative leads disconnected and insulated.
Then wait 10 minutes before proceeding as follows.

OBSERVE ALL SAFETY REGULATIONS DESCRIBED PREVIOUSLY.

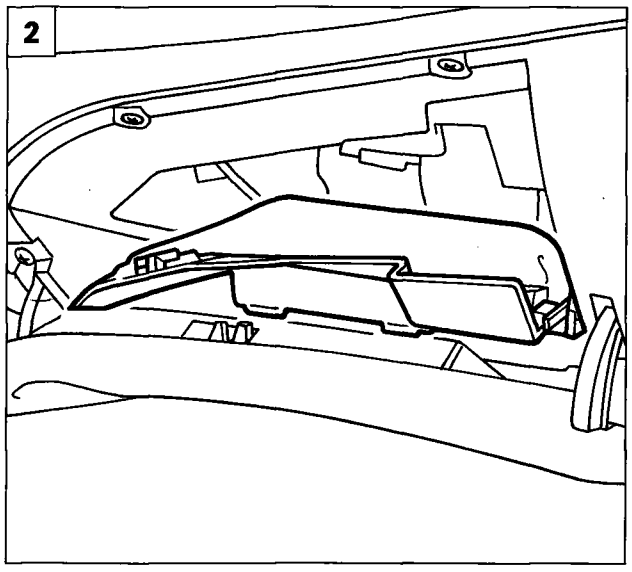

P4F156L02

1. Open the glove compartment and turn both handles shown.
2. Remove the top part of the compartment trim from the vehicle.
3. Unscrew the bolts fastening the glove compartment and remove from the vehicle to facilitate air bag removal.
4. Unscrew the four screws retaining the air bag module with great care.

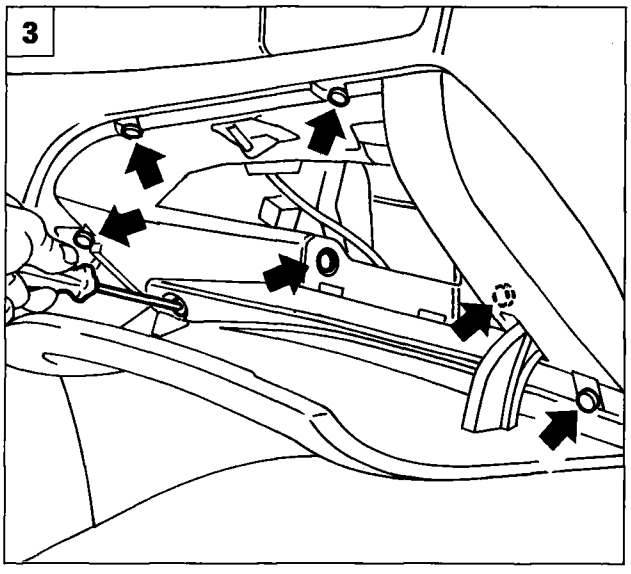

P4F156L03

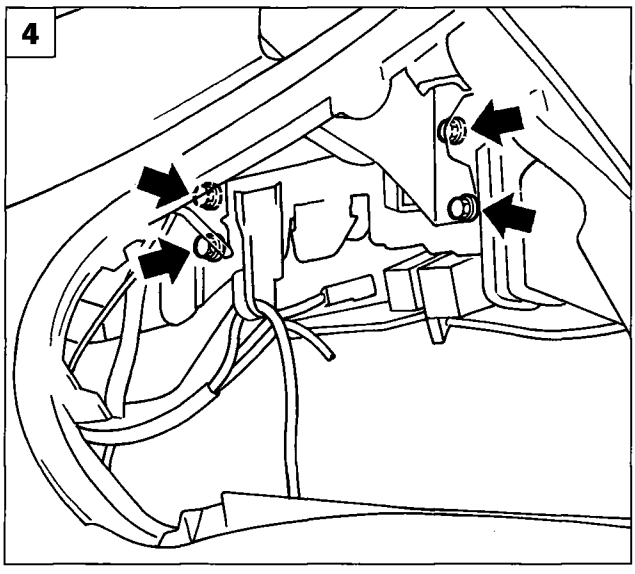

P4F156L04

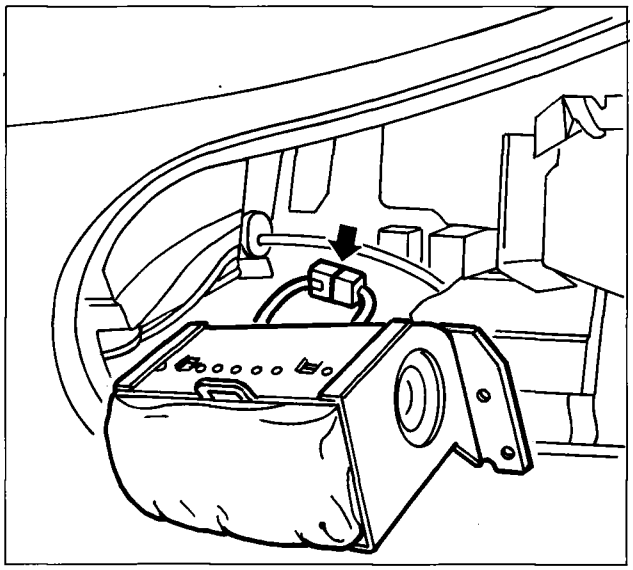

P4F157L01

- Disconnect connector leading from the control unit. Take care not to pull by the lead but by the body of the connector itself. Remove the air bag module from the vehicle.
  Rest the air bag module on the work bench with the cover turned up.

NOTE *For safety reasons, both terminals automatically short-circuit when the module connector is disconnected; a special spring-loaded device holds both terminals together.*

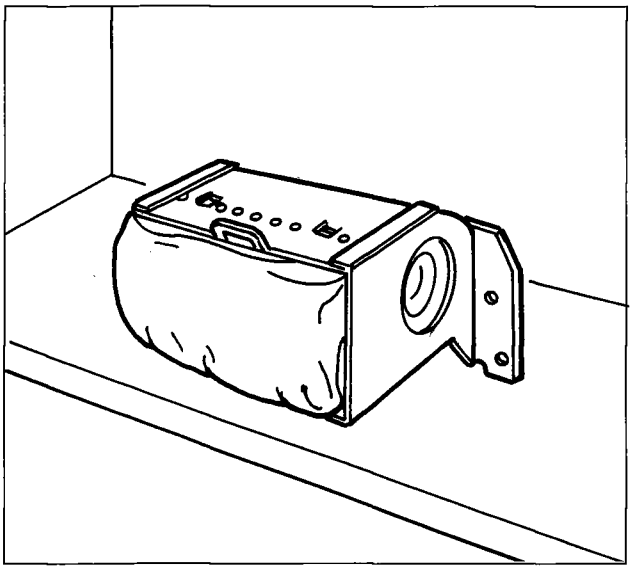

P4F157L02

- Replace the module in its cabinet as described previously. The figure shows the correct position of the module.

NOTE *Reverse order of removal operations to refit.*

NEVER RECONNECT THE BATTERY UNTIL INSTALLATION IS COMPLETE.

NOTE *After the operation, check system operation using a FIAT / LANCIA TESTER.*

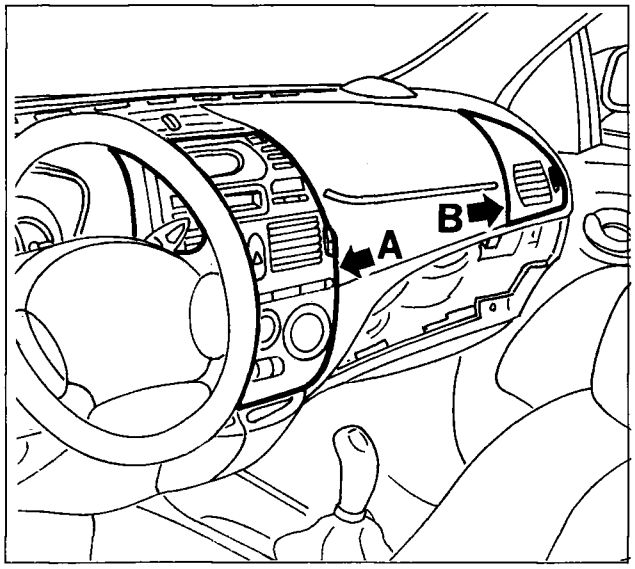

P4F157L03

REPLACING PASSENGER SIDE AIR BAG COVER

- Remove the passenger side air bag as described in the previous pages. Observe the SAFETY REGULATIONS indicated.

- Move the heater control panel (A) and the right hand ventilation outlet (B) to gain access to the air bag cover retaining screws.

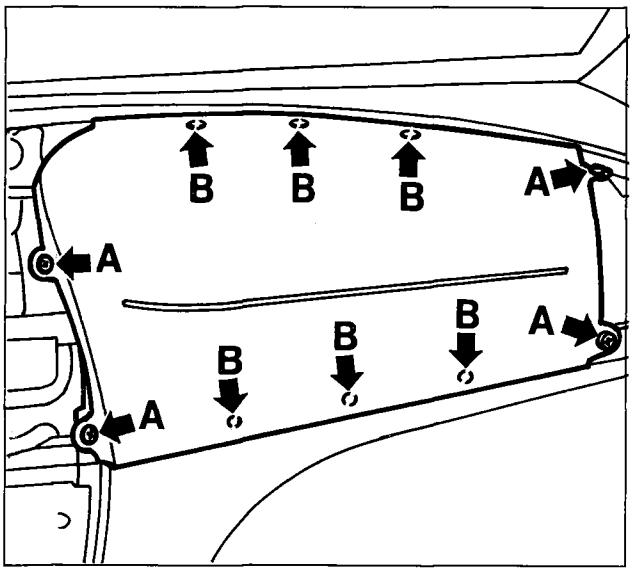

P4F158L01

- Remove the trim by unscrewing the four screws (A) and disconnecting the six rivets (B).

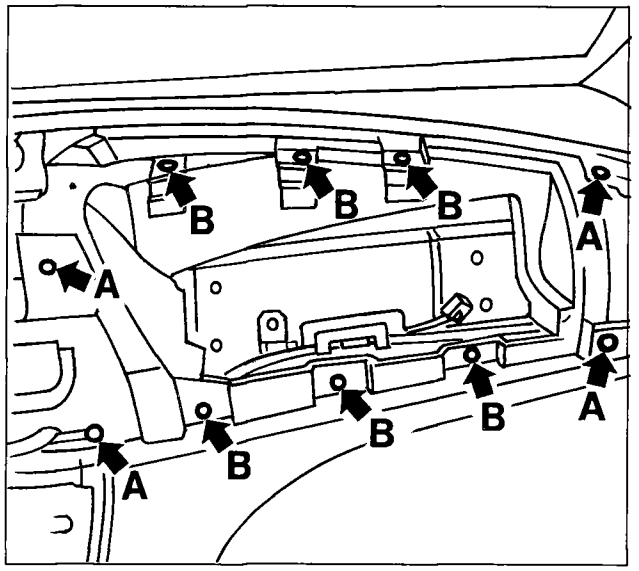

P4F158L02

NOTE *Reverse order of removal operations to refit CAREFULLY CHECK THE CONDITION OF BOLT SEATS (A) AND RIVET SEATS (B).*

If these seats on the facia trim are damaged, IT IS NECESSARY TO REPLACE THE FACIA TRIM.

REMOVING-REFITTING AIR BAG CONTROL UNIT

Always fit and remove the control unit with the ignition key turned to "STOP" and removed and with the battery positive and negative leads disconnected and properly insulated.
Then wait for 10 minutes before proceeding as follows.
ALWAYS OBSERVE ALL SAFETY REGULATIONS.

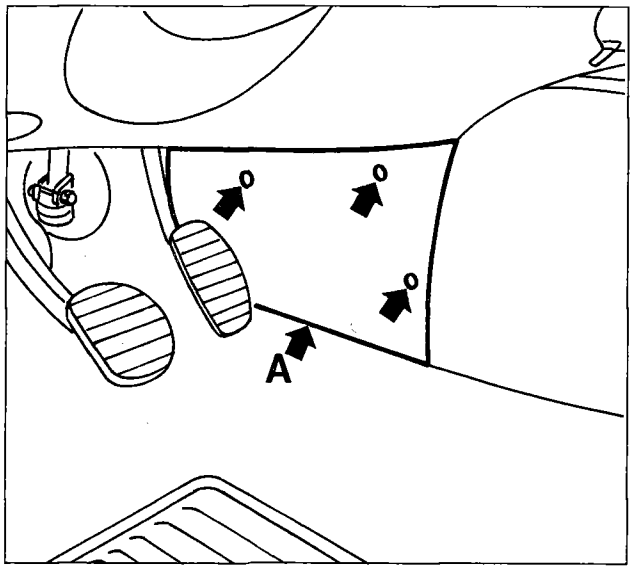

P4F054H04

- Remove left-hand trim panel (A), located beneath the facia.
- Proceed in the same way for the right-hand panel.
- Remove the tunnel trim (see Group 70).

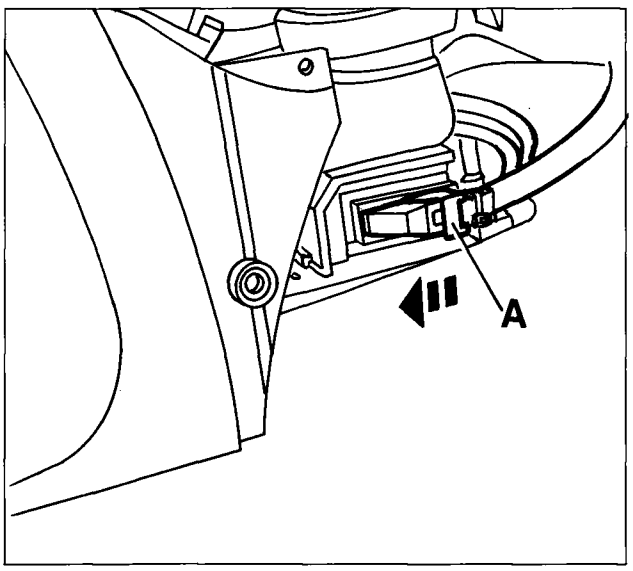

P4F159L01

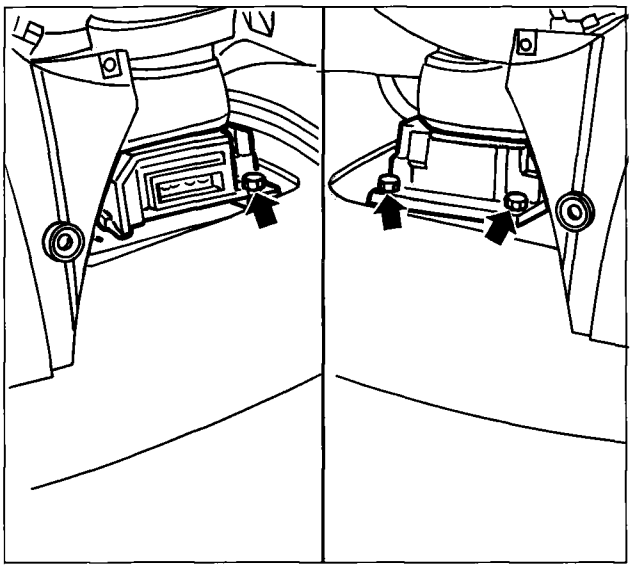

P4F159L02

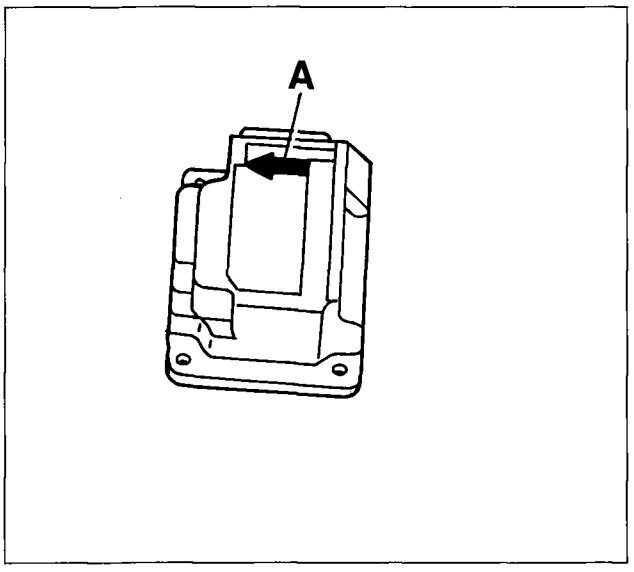

P4F159L03

- Turn the connector retaining lever (A) in the arrowed direction and disconnect the connector.
- Unscrew the screw indicated.
- Working from the opposite side of the tunnel, unscrew the bolts indicated and remove the air bag control unit

NOTE *Reverse order of removal operations to refit. Observe the following instructions:*

When refitting, install the electronic control unit in its place and align arrow (A) on the metal control unit case with the direction of motion.

Never strike or shape the electronic control unit under any circumstances.
Do not connect the control unit electrical connection when this is not yet rigidly connected to the vehicle because this could lead to system activation.

DO NOT RECONNECT THE BATTERY UNTIL INSTALLATION IS COMPLETE.

NOTE *After the operation, check the system using a FIAT / LANCIA TESTER.*

Copyright Fiat Auto

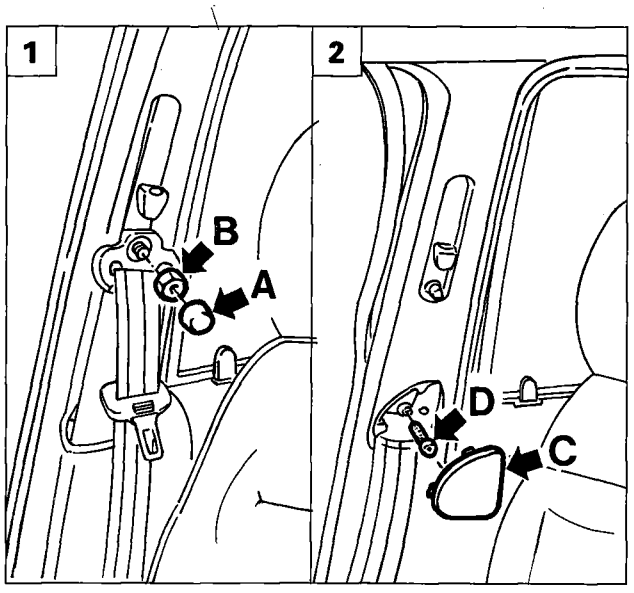

P4F160L01

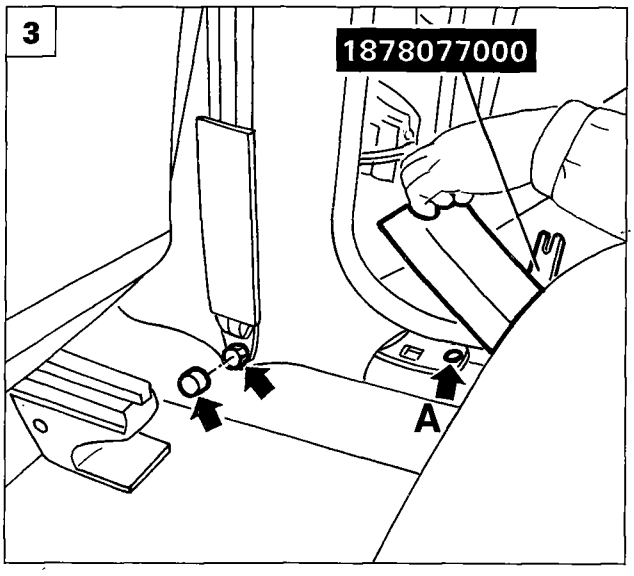

P4F160L02

REMOVING-REFITTING PRETENSIONERS

1. Remove fastening covers (A) and unscrew nut (B) adjusting height of the front seat belt.
2. Prise up the bolt cover panel (C), then unscrew retaining bolt (D) securing the pillar trim.
3. Remove the fastener cover and unscrew screw retaining the front seat belt.
   Use tool 1878077000 to release and raise the rear protective strip, then unscrew bolt (A) retaining the pillar cover.
4. Unscrew the front bolt under the facia retaining the protective strip and use tool 1878077000 to release and lift the front protective strip. Unscrew the pillar cover retaining bolt.
5. Lift up door seals (A) and (B) near to the pillar trim. Remove central pillar trim using tool 1878077000 to gain access to the pretensioner device.

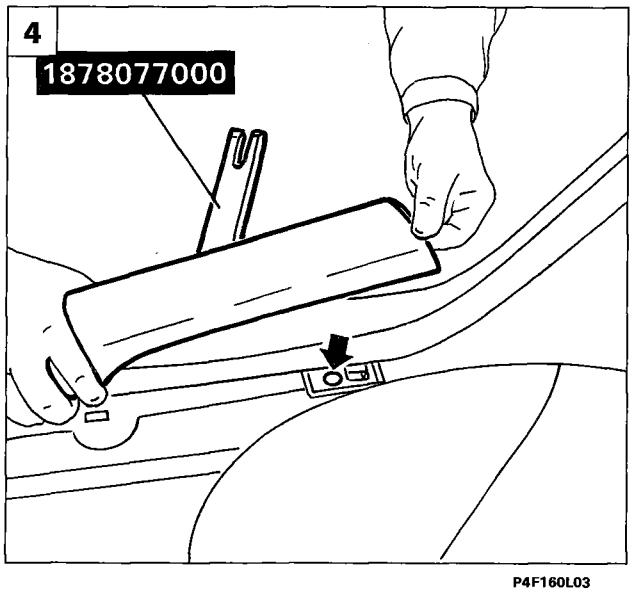

P4F160L03

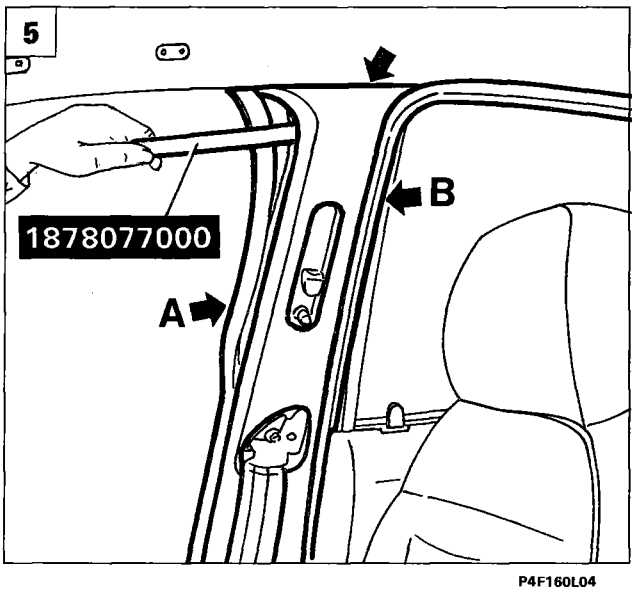

P4F160L04

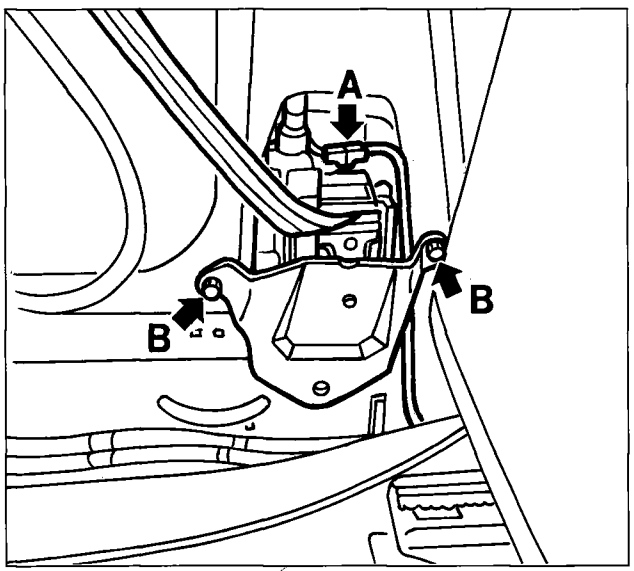

P4F161L01

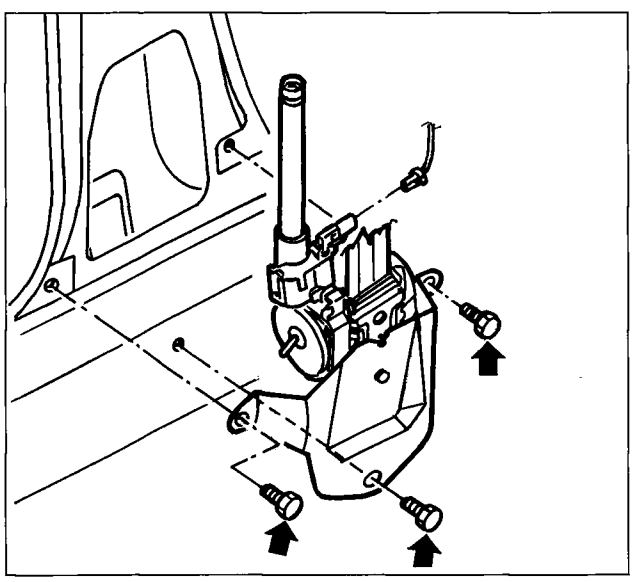

P4F161L02

Always remove and fit the pretensioners with the ignition key turned to STOP and removed and with the battery negative and positive leads disconnected and insulated. Then wait for 10 minutes before proceeding with the following operations. ***ALWAYS OBSERVE ALL SAFETY REGULATIONS DESCRIBED PREVIOUSLY.***

- Carefully disconnect electrical connection (A) of the pretensioner.

NOTE *For safety reasons, when the pretensioner connector is disconnected, the two terminals automatically short circuit: a special spring-loaded device holds both terminals together.*

- Remove the belt and pretensioner by unscrewing retaining bolts (**B**).

NEVER CONNECT THE BATTERY UNTIL INSTALLATION IS COMPLETE.

NOTE *After the operation, check the system using a FIAT / LANCIA TESTER.*

NOTE *Reverse order of removal operations to refit. Fully tighten the three retaining screws (**specified torque 4 daNm**).*

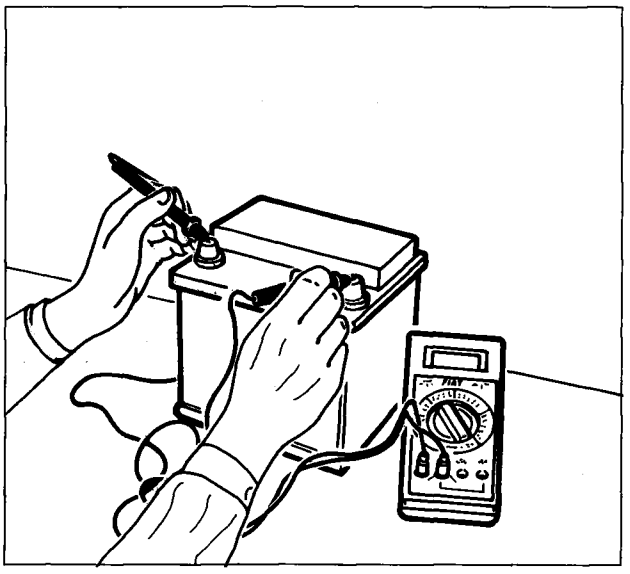

P4F162L01

BATTERY

Batteries fitted to all versions of this vehicle are **SE** type (Sealed Energy) and do not require maintenance.
This type of battery offers the following advantages over the conventional type:
- very low electrolyte consumption due to the use of a new type of grille and plate alloy;
- very low charge loss rate. This allows efficient starting for a period of 7 months: the battery is therefore suitable for extended storage (at temperatures less than 28°C);
- reduction in the volume of gas produced during charging: this gas is responsible for corrosion and the resulting poor terminal contact.

If the battery is assumed to be flat, **leave unattached for at least two hours**, measure the open circuit voltage by connecting a digital voltmeter to the terminals. If less than 12.30 V it is 50% charged, if 12.48 V it is 75% charged; if 12.,66 V it is 100% charged.

ff the electrolyte level is lower than the minimum level on the plastic container in one or more chambers, open the well cover and add distilled, deionised water (as with normal batteries).

NOTE *Do not attempt to charge the battery quickly at voltages in excess of 15.5 V, or using high currents and high recharging amperages.*

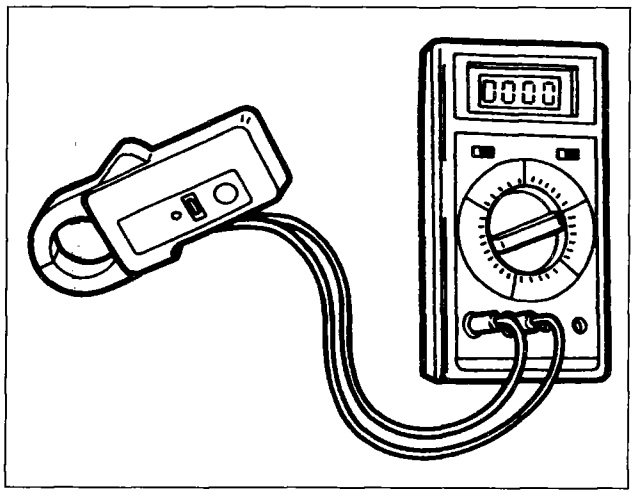

P4F162L02

ALTERNATOR

Check maximum voltage and current intensity delivered by the alternator on the vehicle by using a digital multimeter and HALL effect clip-on ammeter.

Description of clip-on ammeter and use

When this clip is connected to a multimeter, it measures: battery charge and discharge current, current controlled by SCR (silicon controlled diode), current uptake by starter motor, from 10 to 600A without needing to interrupt the circuit. Before beginnng measurement:
- set 'LO-HI' switch to "LO" to meausuer up to 200A or to "HI" for measurements between 200 and 600A.
  The reading may be taken in both positions for any value, but the change in position is necessary to ensure greater reading precision on the display.
- After connecting the multimeter, set the device to the 200mV or 2V range, a.c. or d.c. according to the current to be measured.
  If the range selected is 200mV, the reading will be directly in Amps. If the range is 2V, the reading will be multiplied by one thousand.
- Now reset the gauge by means of the "ZERO ADJUST" knob. When the presence of dispersed electrical fields is suspected, reset to zero with the clip held 5-10 cm from the driver.
  In the case of d.c. measurements, hysteresis effects could make it impossible to reset the clip to zero. In this event, open and close the clip a few times and then proceed to reset.

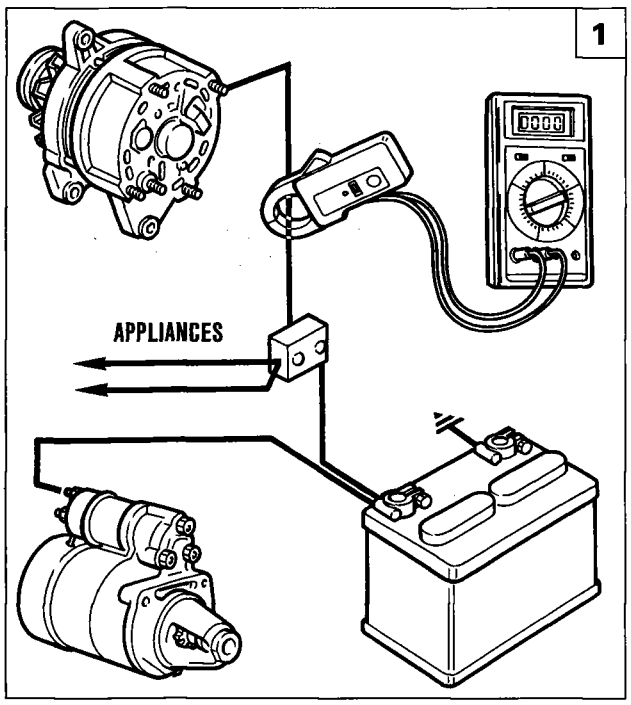

P4F163L02 P4F163L01

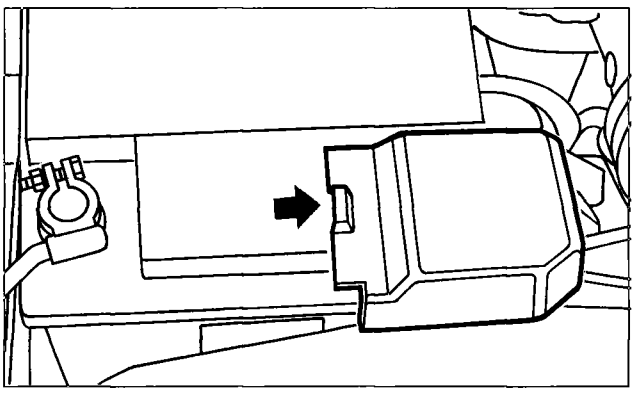

P4F163L03

NOTE *To remove the cover (located on the battery positive terminal) insert a screwdriver carefully at the point indicated by the arrow until the retaining pins come out.*

1. Checking current intensity

- Fit the clip-on ammeter onto the alternator-junction lead
- start up the engine and run at a speed between 3000 - 4000 rpm;
- turn on all available services;
- read maximum current intensity off the multimeter display.

If this value is more than 5A less than specified, service the alternator.

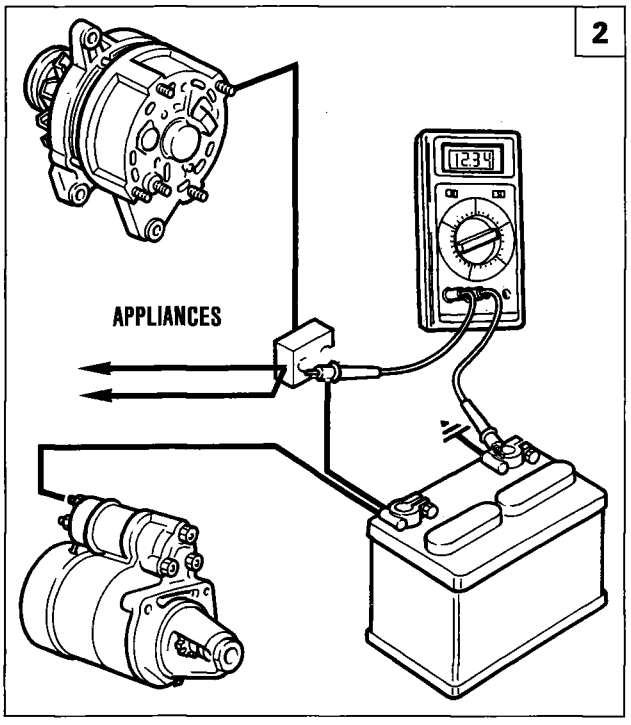

P4F163L05 P4F163L04

2. Checking the voltage

- Bring the multimeter probes into contact with the battery terminals;
- start up the engine and run at a speed of between 3000 - 4000 rpm;
- gradually begin to turn on some appliances until uptake is about half of maximum load.

Under these conditions, voltage reading should be between maximum and minimum (see graphs), according to electronic regulator environmental temperature (alternator).

NOTE *Refer to Group 00 "TECHNICAL DATA" for the type of alternator fitted to the various vehicle versions and specifications.*

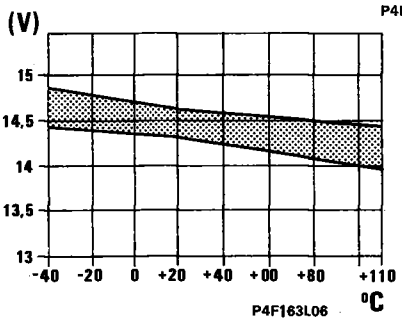

P4F163L06

Electronic regulator voltage as a function of environmental temperature

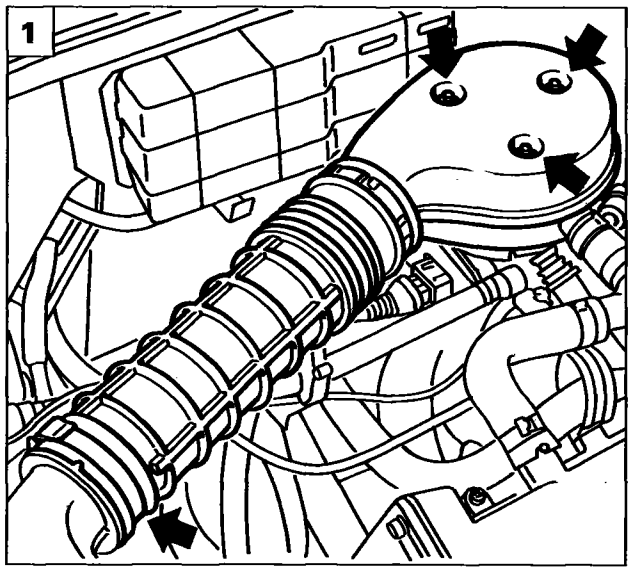

P4F164L01

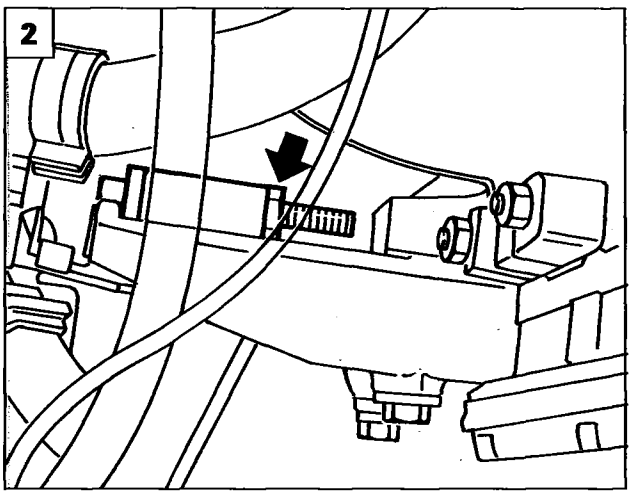

P4F164L02

Before carrying out removal procedures described in this chapter, disconnect the battery negative terminal.

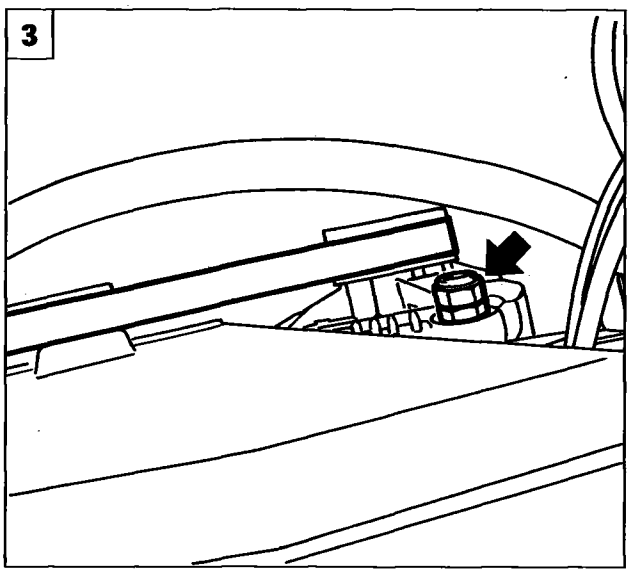

P4F164L03

Removing-refitting (engine 1370)

1. Remove the air intake sleeve by unscrewing the nuts and collar indicated.
2. Slacken belt tension by unscrewing the belt tensioner retaining nut.
3. Unscrew nut retaining the alternator mount bracket and the nut retaining the top of the alternator to the engine.
4. Remove the belt tensioner from the engine and prise the belt off the pulleys.
5. Unscrew the lower retaining bolt, disconnect the electrical connections, then remove the alternator from the vehicle.

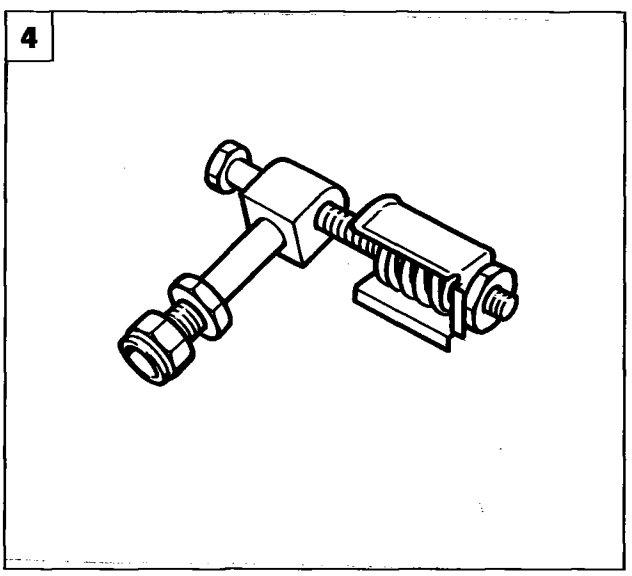

P4F164L04

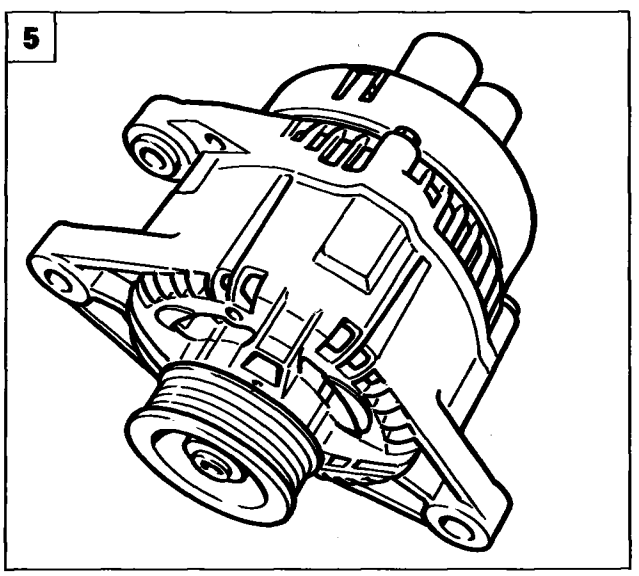

P4F164L05

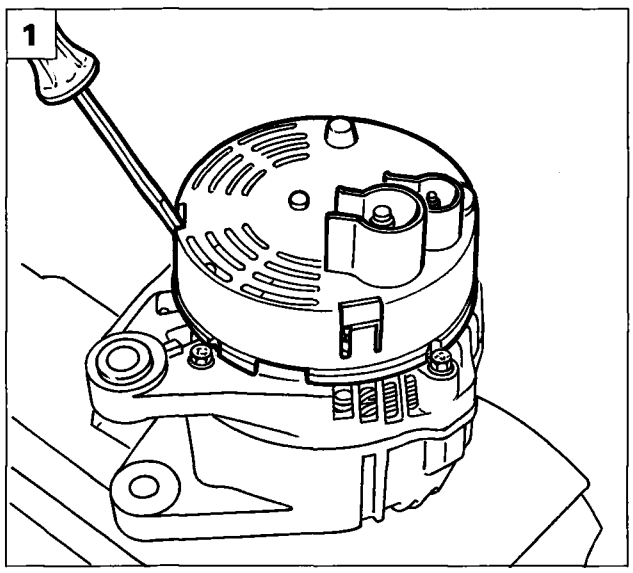

P4F165L01

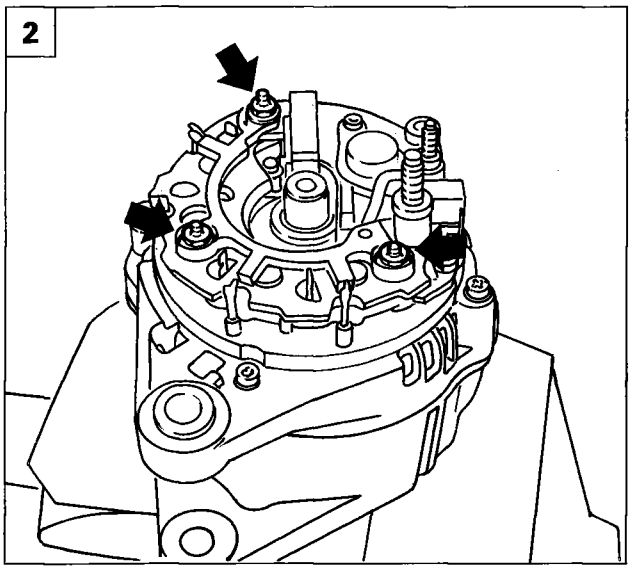

P4F165L02

Overhaul

If the alternator charge signal is missing or irregular, carry out the following checks before fully dismantling the alternator:

- check belt tensioner;
- check nut on alternator positive terminal (B+) is tight and check washer is present;
- check that the nut is tight on excitation terminal (D+), and check washer is present;
- check that the bolts retaining the battery negative lead to the body are tight;
- check that the battery terminals are clean and tight.

1. Position the alternator as shown and remove the plastic protection by undoing the tabs indicated.
2. Unscrew nuts shown in figure.
3. Unscrew bolts indicated in figure.
4. Use a welder to disconnect the contacts shown and remove the plate.

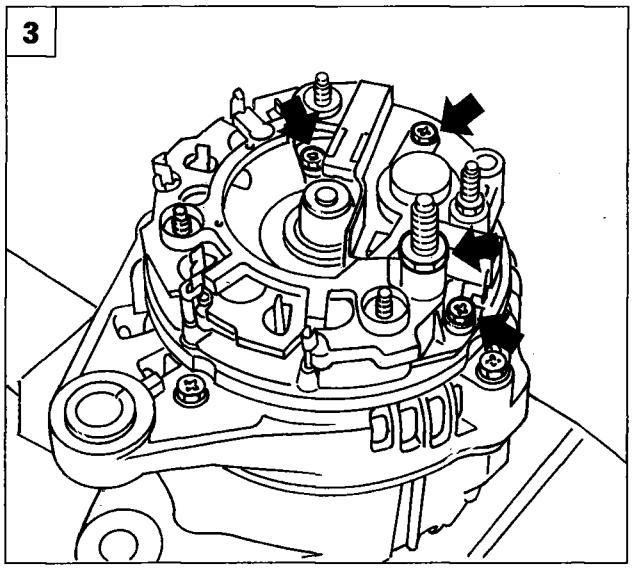

P4F165L03

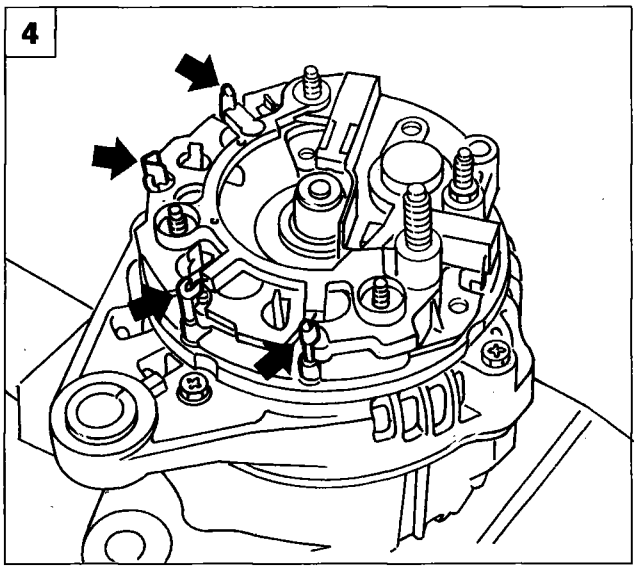

P4F165L04

Copyright Fiat Auto

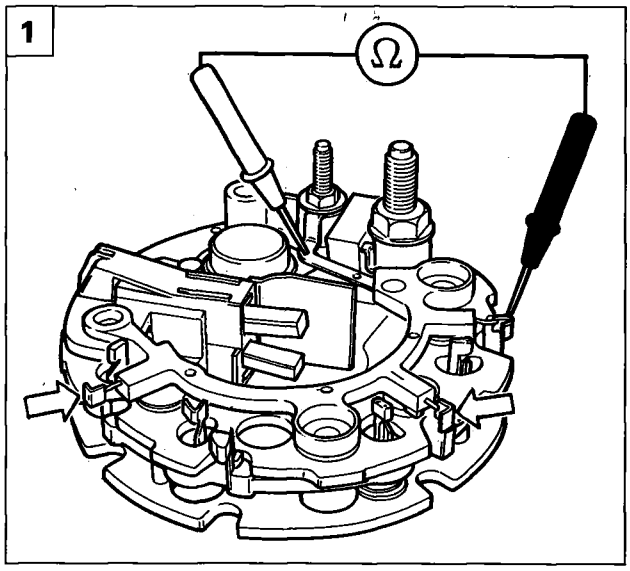

P4F166L01

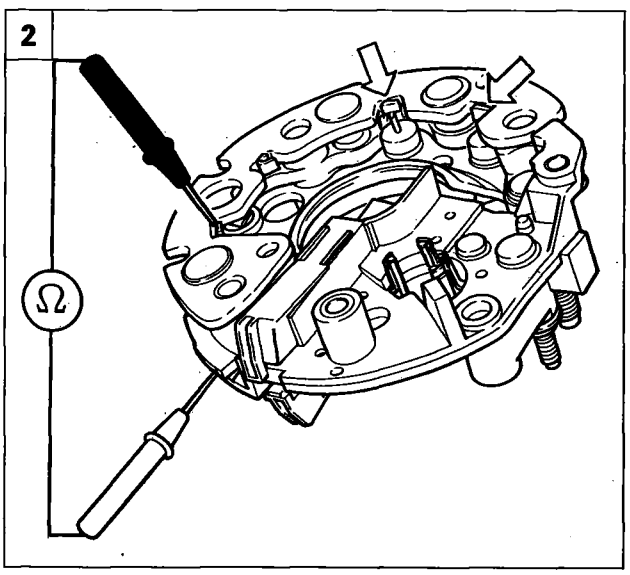

P4F166L02

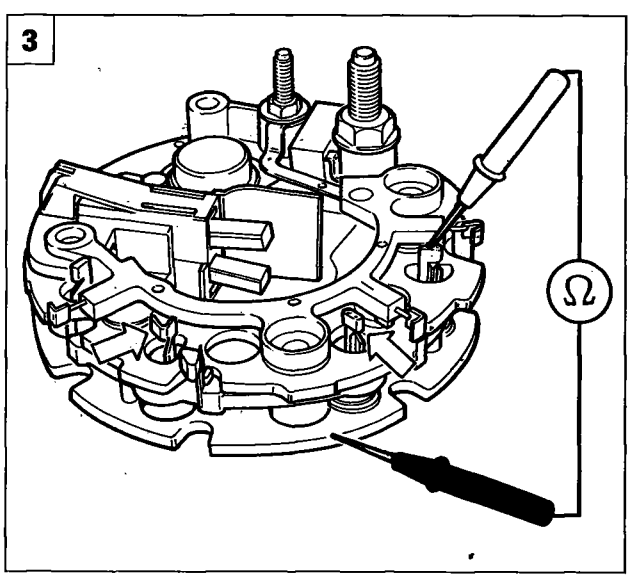

P4F166L03

Checking diodes

Checking excitation diodes

1. Insert the probes of an ohmmeter as shown in the figure.

NOTE *The readings for the three excitation diode terminals should show infinite resistance (current not flowing through). When the probe positions are reversed, the instrument will show actual diode resistance (current flowing through).*

Checking positive diodes

2. Turn the diode plate over. Fit ohmmeter probes as shown in the figure.

NOTE *The readings for the three positive diode terminals should show infinite resistance (current not flowing through). When the probe positions are reversed, the instrument will show actual diode resistance (current flowing through).*

Checking negative diodes

3. Insert the probes of an ohmmeter as shown in the figure.

NOTE *The readings for the three negative diode terminals should show infinite resistance (current not flowing through). When the probe positions are reversed, the instrument wil show actual diode resistance (current flowing through).*

Disassembly

4. Proceed as shown in the figure to unscrew nut retaining the pulley and then remove pulley.

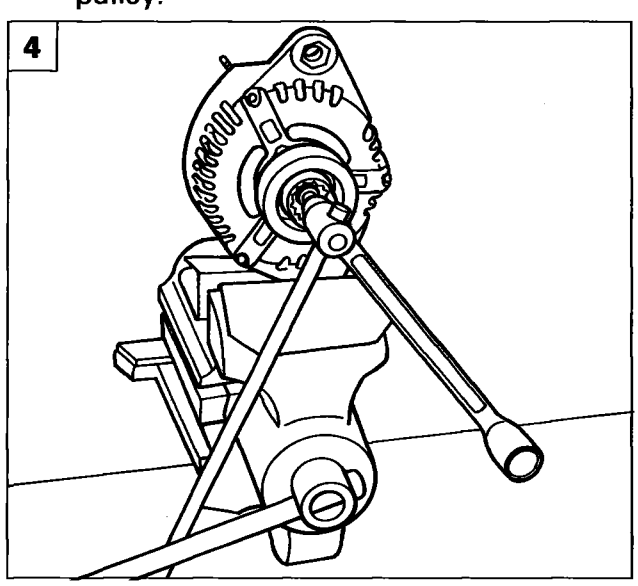

P4F166L04

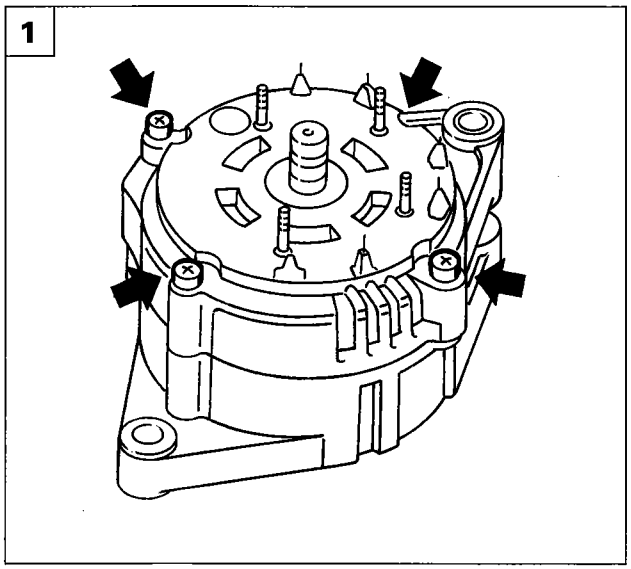

P4F167L01

1. Unscrew the bolts indicated retaining the alternator assembly.
2. Remove the following parts of the alternator:
   A. Lower mount plate with stator winding
   B. Rotor
   C. Front mount plate

3. Checking field winding resistance (rotor) at slip rings

- Bring both probes of an ohmmeter (with scale set to Ω x 1) into contact with rotor slip rings (arrowed). A given resistance reading should be shown on the guage.

NOTE *When the resistance value is infinite (circuit broken) replace the rotor.*

4. Checking stator winding insulation

- Bring both probes of an ohmmeter (with scale set to Ω x 1) into contact with winding terminals and stator case ;
- the gauge should show an infinite resistance reading. Otherwise replace the rotor.

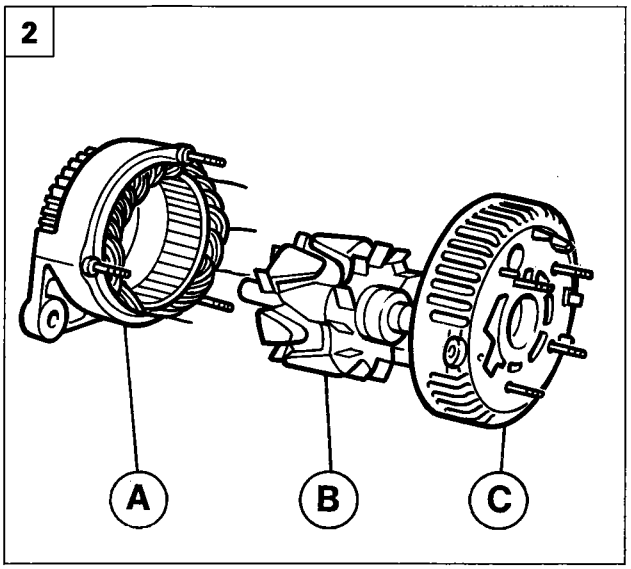

P4F167L02

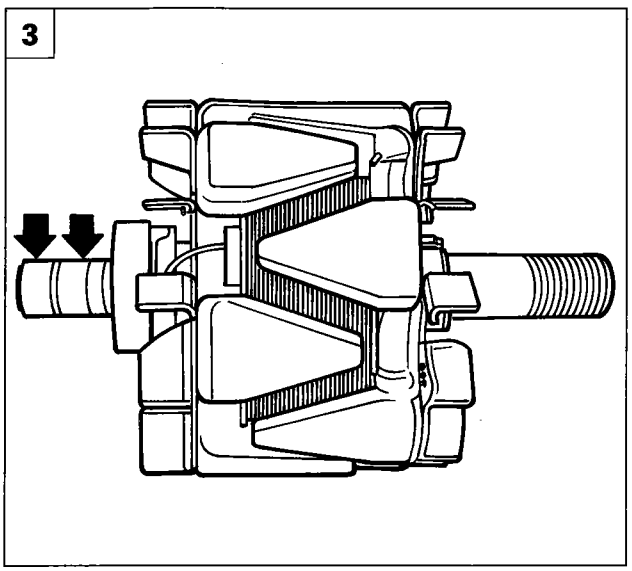

P4F167L03

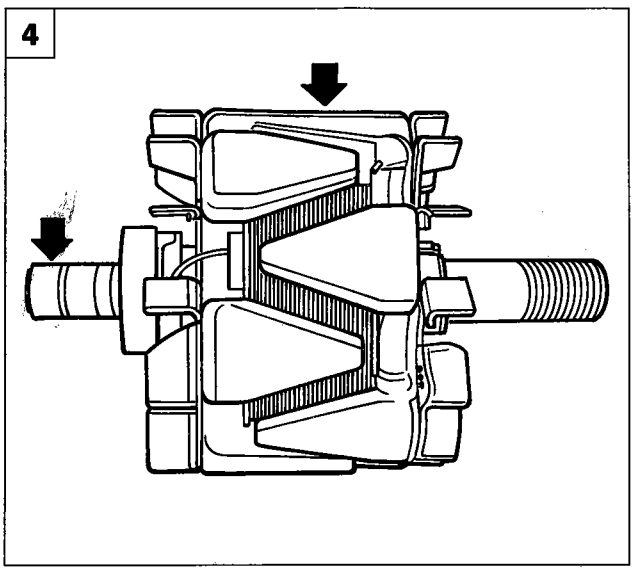

P4F167L04

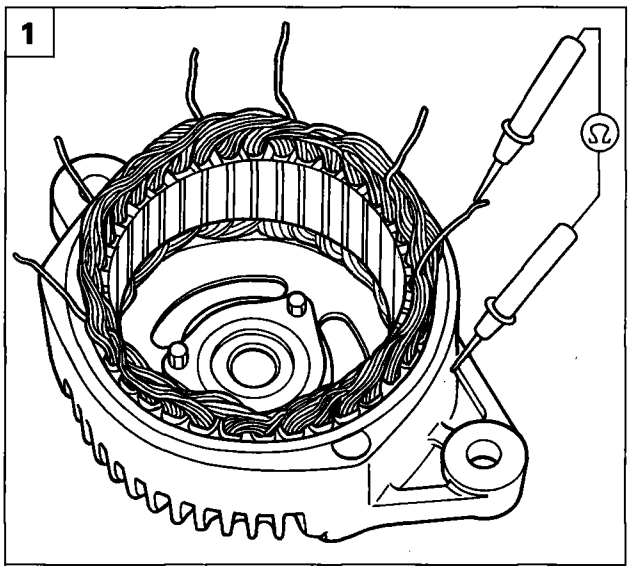

P4F168L01

1. Check stator winding insulation:
   - bring the probes of an ohmmeter (with scale set to Ω x 1) into contact with the winding terminals and the stator case;
   - the instrument should show an infinite resistance reading. Otherwise replace the rotor.
2. Check stator winding continuity:
   - bring the probes of an ohmmeter (with scale set to Ω x 1) into contact with the stator winding terminals (1-2), (3-4), (5-6);
   - the gauge should show a certain resistance value for each measurement.

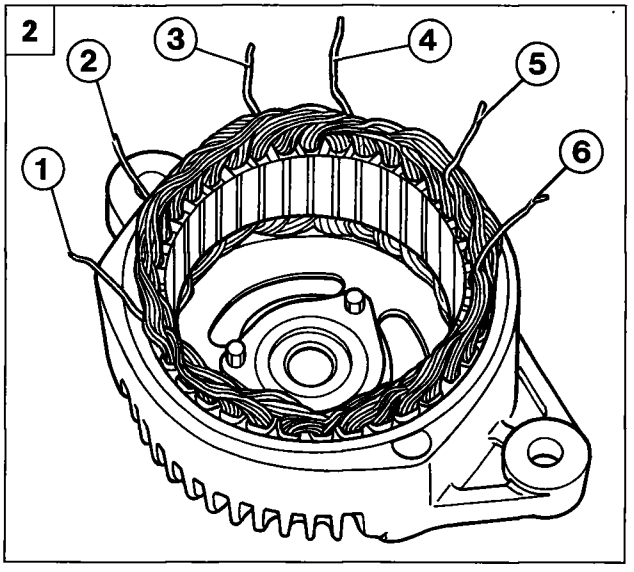

P4F168L02

If the resistance value does not rise from the beginning of the scale (infinite resistance) or reaches the end of the scale (zero resistance), the circuit measured is broken or short--circuited and the stator requires replacement.

Removing-refitting (engine 1581)

- Place the vehicle on a lift and remove the right hand wheel
3. Unscrew upper alternator retaining screw.
4. Raise the vehicle and remove the wheel arch protection after unscrewing the retaining bolts.

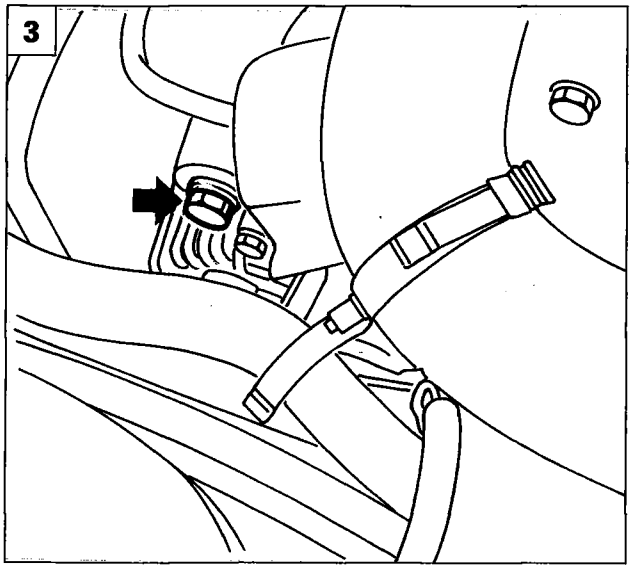

P4F168L03

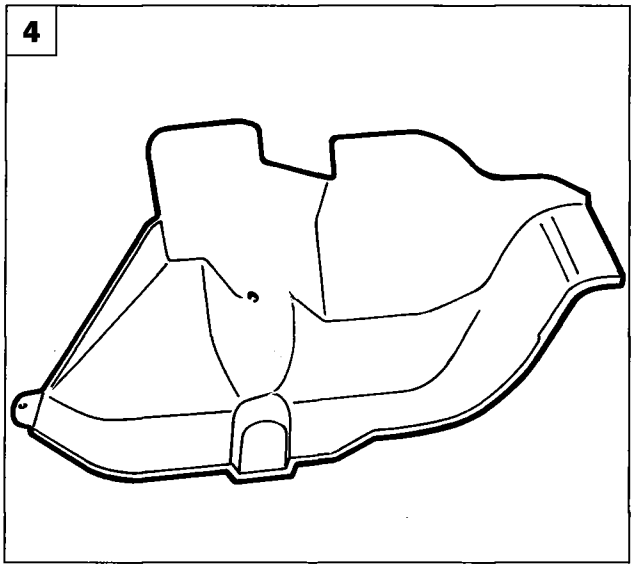

P4F168L04

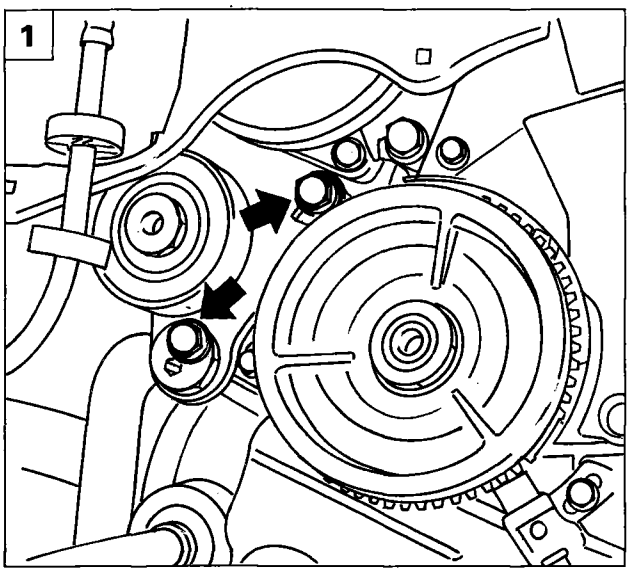

P4F169L01

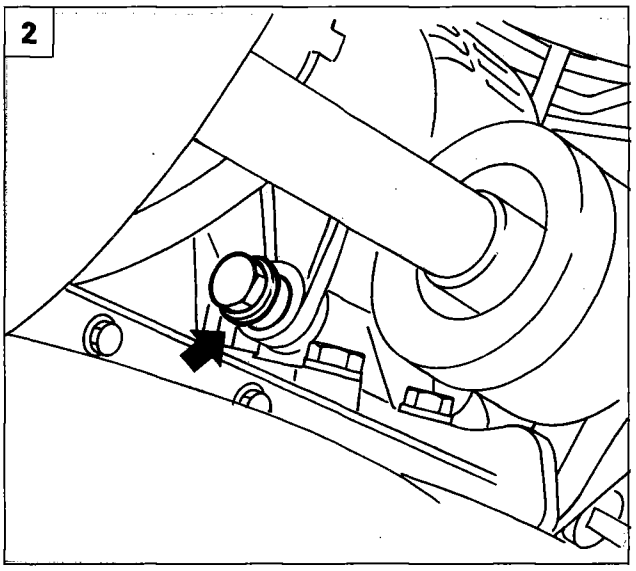

P4F169L02

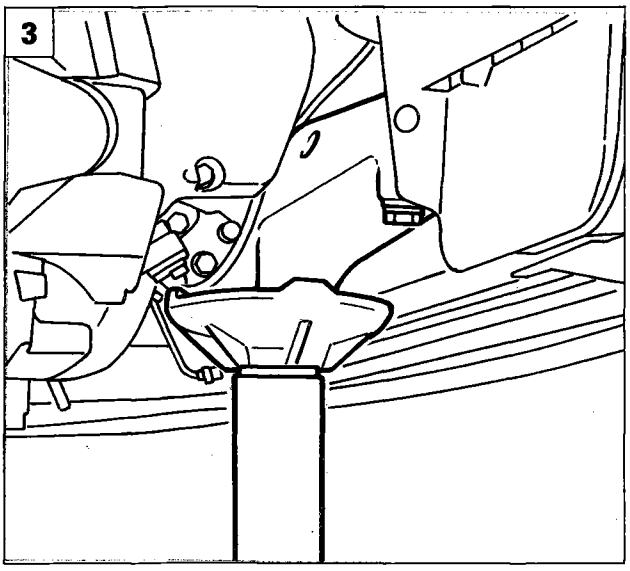

P4F169L03

1. Loosen nuts retaining belt tensioner bearing, prise off the belt and remove from the vehicle.
2. Disconnect electrical connections, then unscrew lower alternator retaining bolt.
3. Position a hydraulic jack beneath the engine mount as shown in the figure.
4. Unscrew the bolts retaining the engine mount to the body
5. Lower the hydraulic jack in order to remover the alternator.

NOTE *To service the alternator, refer to the procedure described previously for another version.*

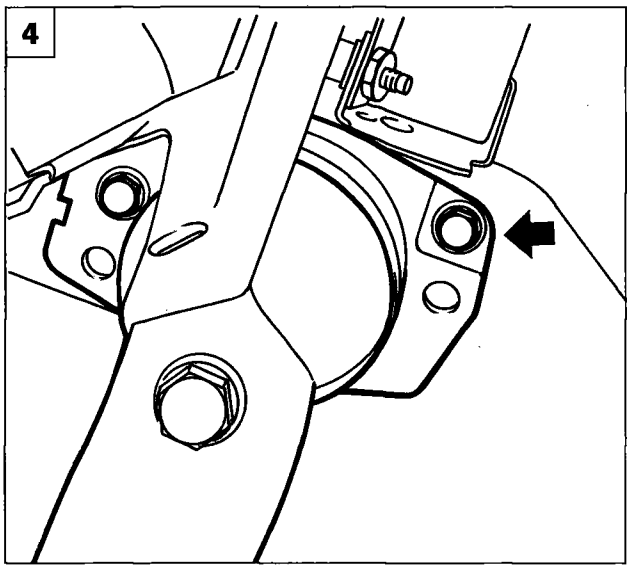

P4F169L04

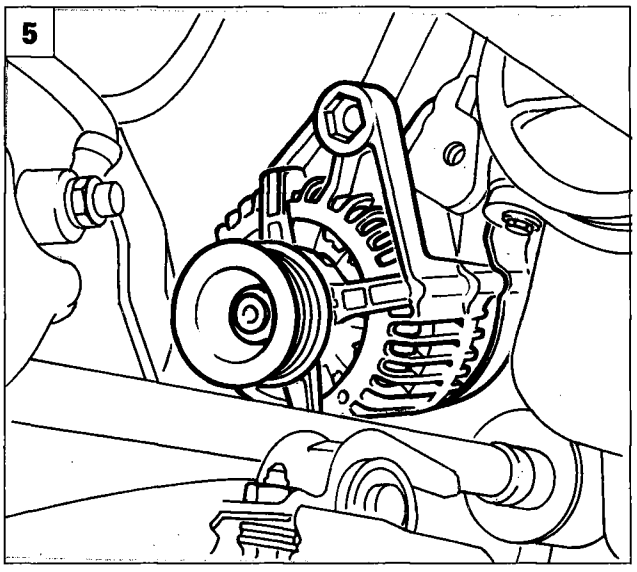

P4F169L05

Copyright Fiat Auto

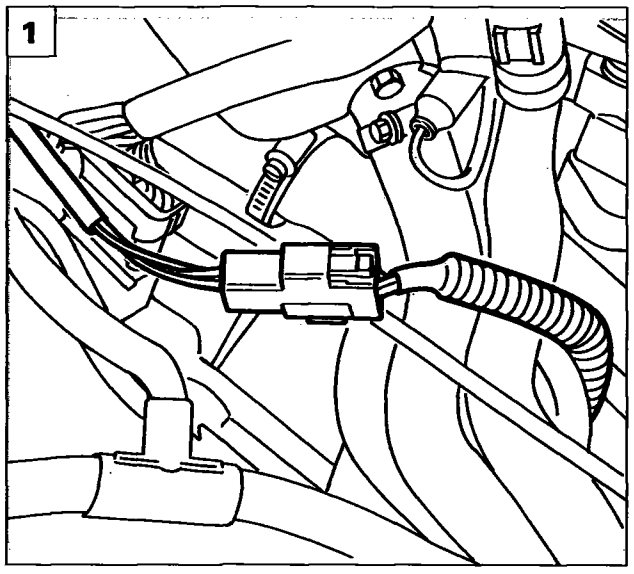

P4F170L01

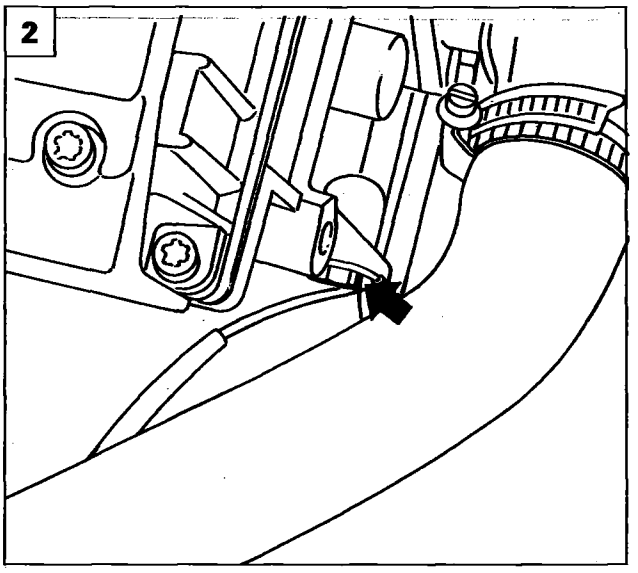

P4F170L02

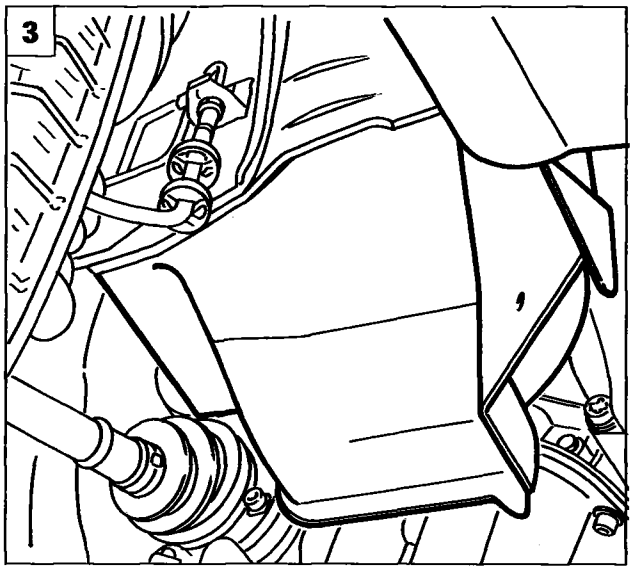

P4F170L03

Removing-refitting (engine 1747)

1. Place the vehicle on a lift and disconnect the lambda probe connector.
2. Unscrew the screw indicated and release the lambda probe wiring .
3. Raise the vehicle and remove the wheel arch protection after unscrewing the retaining screws, then prise off the belt.
4. Remove the bolts retaining the first section of the exhaust pipe to the catalytic converter.
5. Unscrew the nuts retaining the first section of the exhaust pipe to the exhaust manifold.

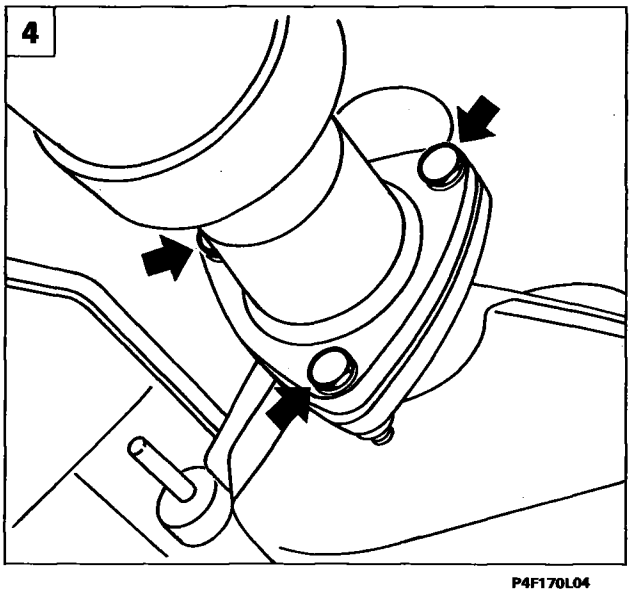

P4F170L04

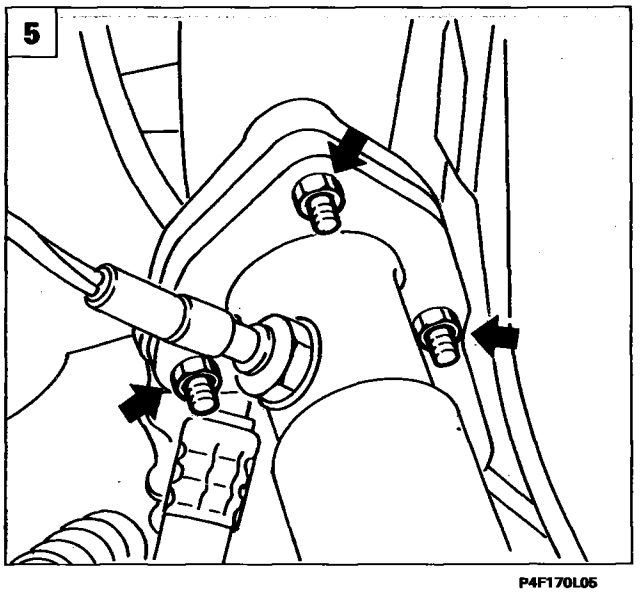

P4F170L05

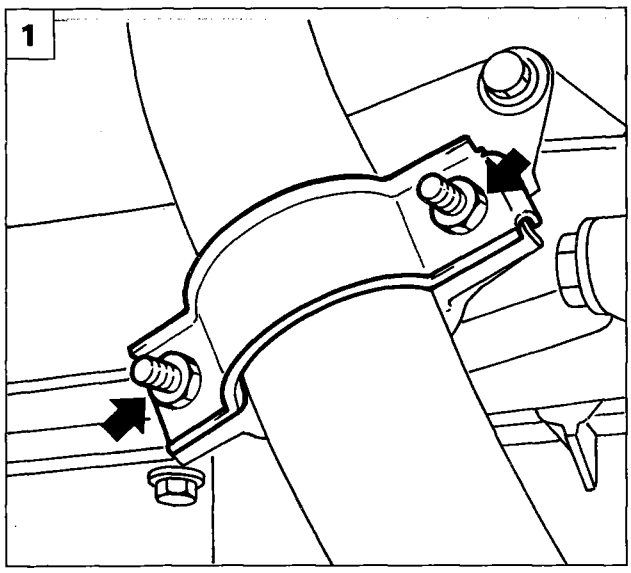

P4F171L01

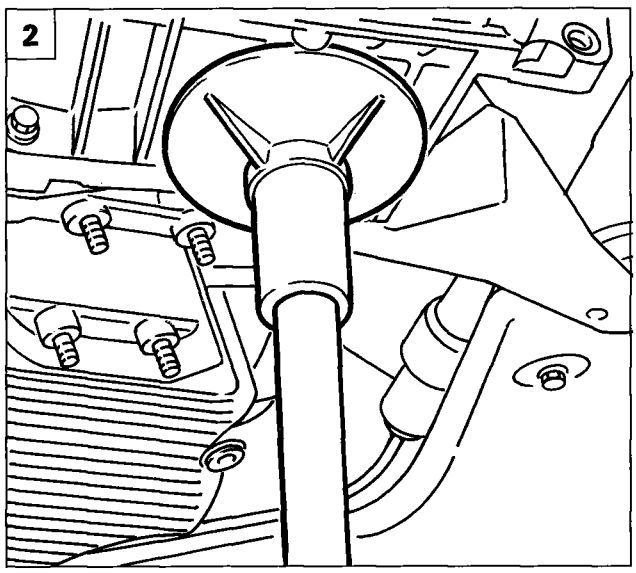

P4F171L02

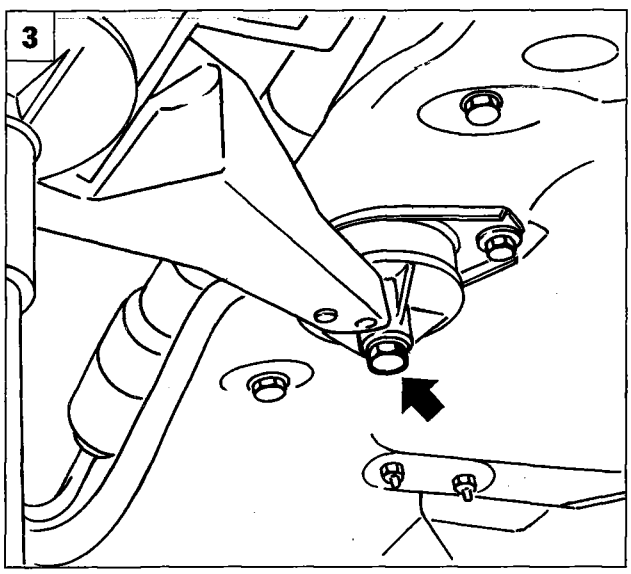

P4F171L03

1. Unscrew the nuts retaining the first section of the exhaust pipe to the power unit and remove from the vehicle.
2. Position a hydraulic jack beneath the power unit as shown in the figure.
3. Unscrew the reaction bracket bolt. Lower the hydraulic jack in order to move the power unit to take out the alternator.
4. Open the protective cover and disconnect the electrical connections from the alternator.
5. Unscrew bolts retaining the alternator to the power unit and remove from the vehicle.

NOTE *To overhaul the alternator, refer to the procedure described on previous pages for other engine versions.*

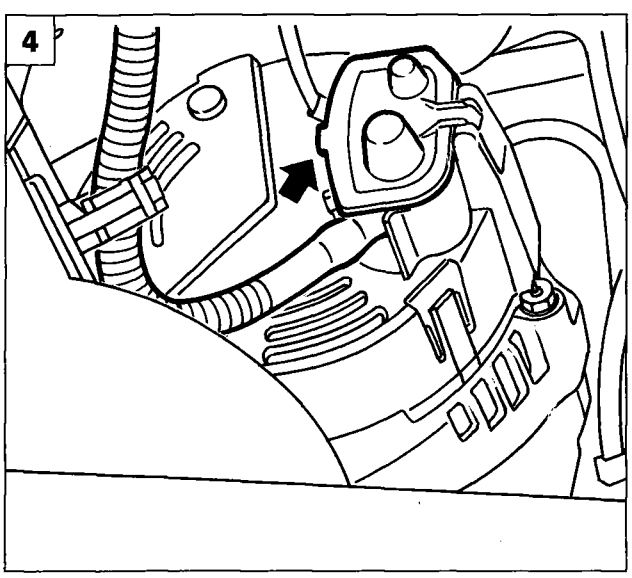

P4F171L04

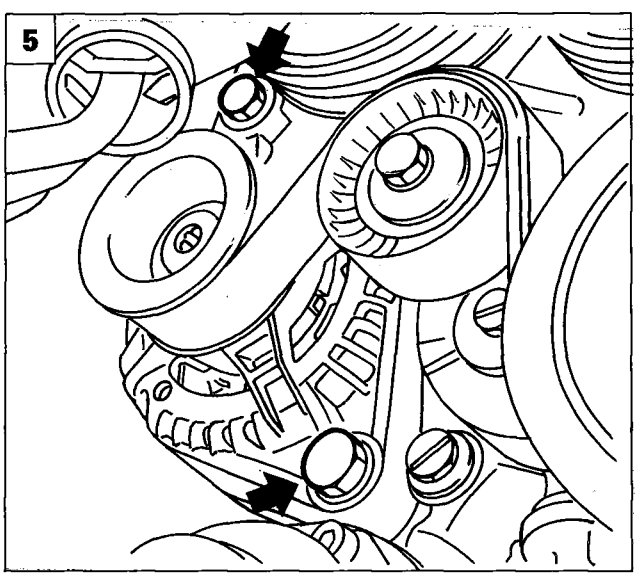

P4F171L05

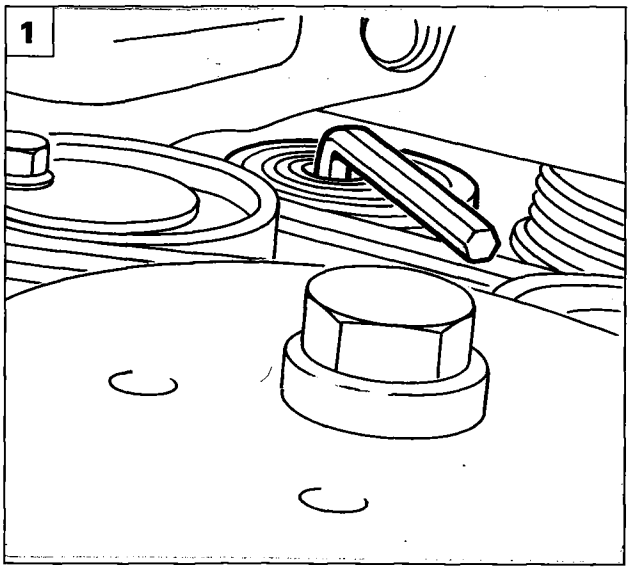

P4F172L01

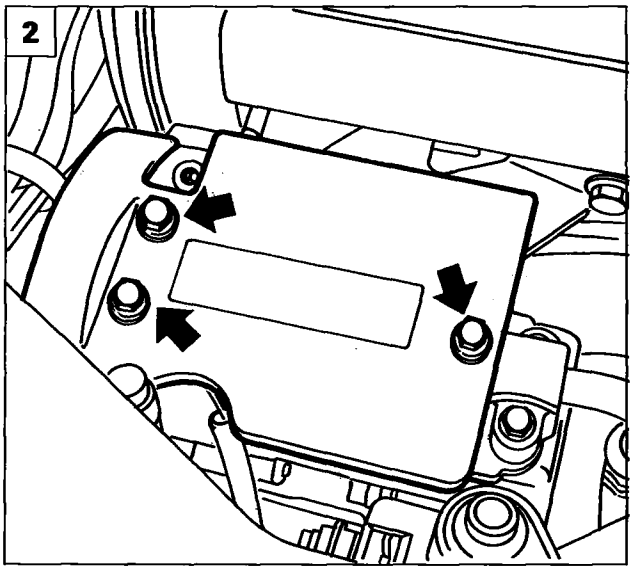

P4F172L02

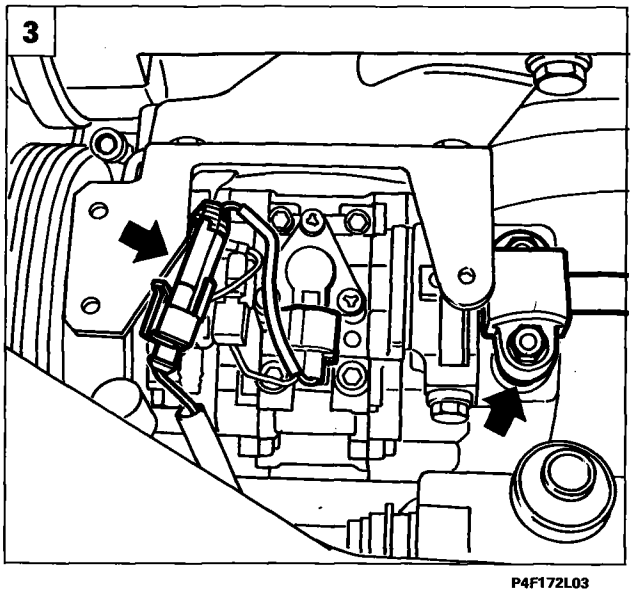

P4F172L03

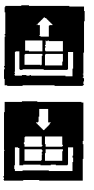

Removing-refitting (engine 1998)

Place the vehicle on a lift and drain the heating/ventilating system (see Section 50).

Remove the right light cluster as described in the relevant paragraph.

1. Raise the vehicle and loosen the belt tensioner bearing after removing the lower protective guard.
2. Lower the vehicle and remove the compressor protection shown in the figure.
3. Disconnect electrical connection and the heating/ventilation pipe shown.
4. Disconnect the heating/ventilation system pipe from the compressor. Work through the empty light cluster compartment.
5. Loosen the bolt retaining the alternator support bracket.

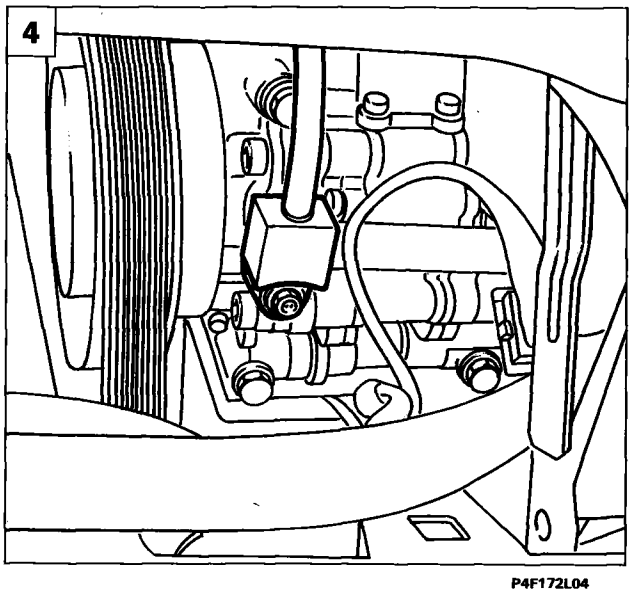

P4F172L04

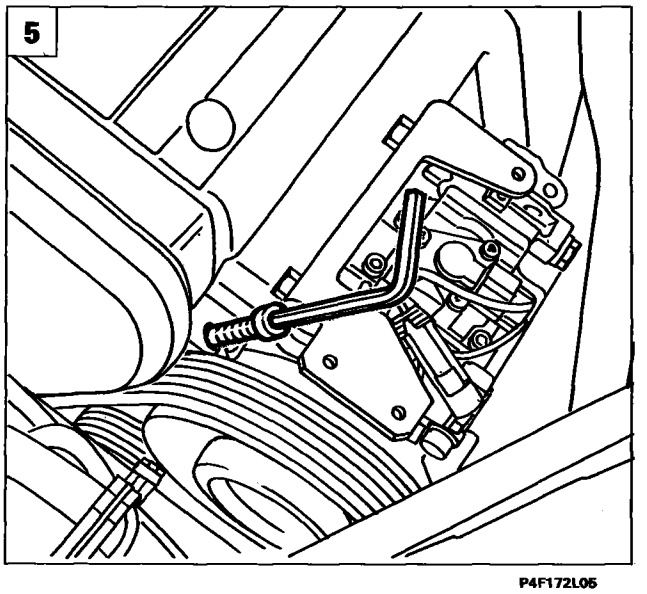

P4F172L05

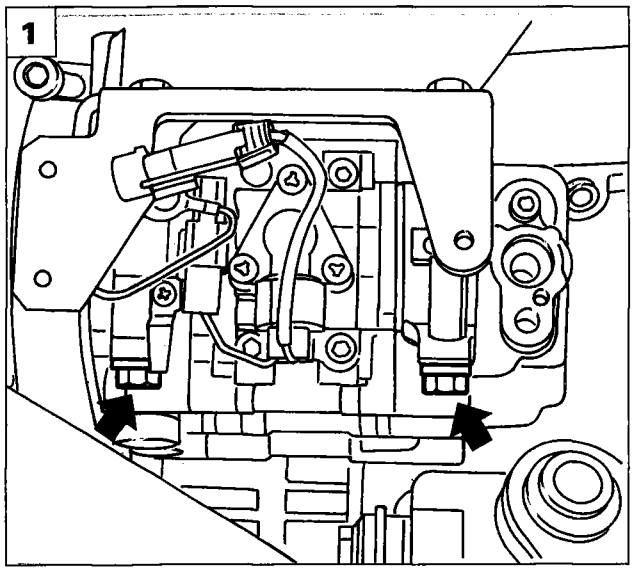

P4F173L01

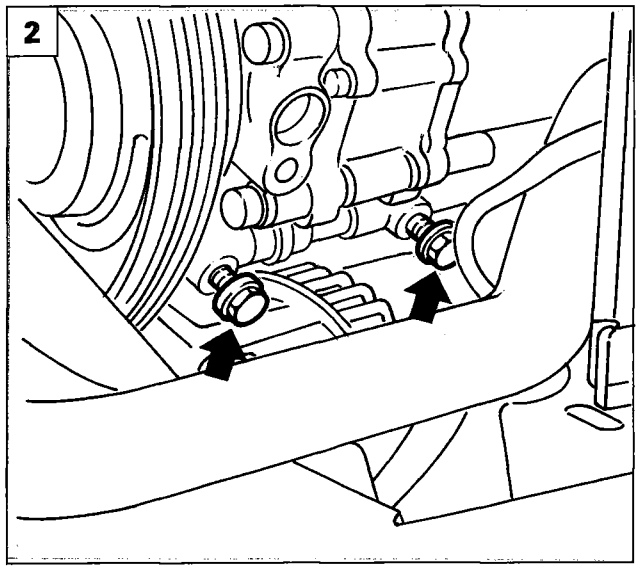

P4F173L02

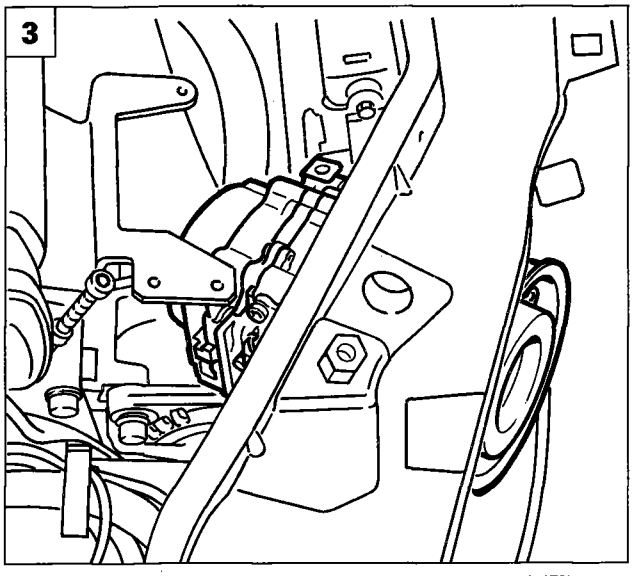

P4F173L03

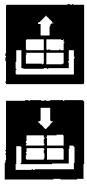

1. Unscrew top compressor retaining bolts.
2. Unscrew lower compressor retaining bolts.
3. Prise off the chain and remove the compressor from the right light cluster compartment.

4.5. Unscrew the bolts fastening the compressor mount plate and move to one side,

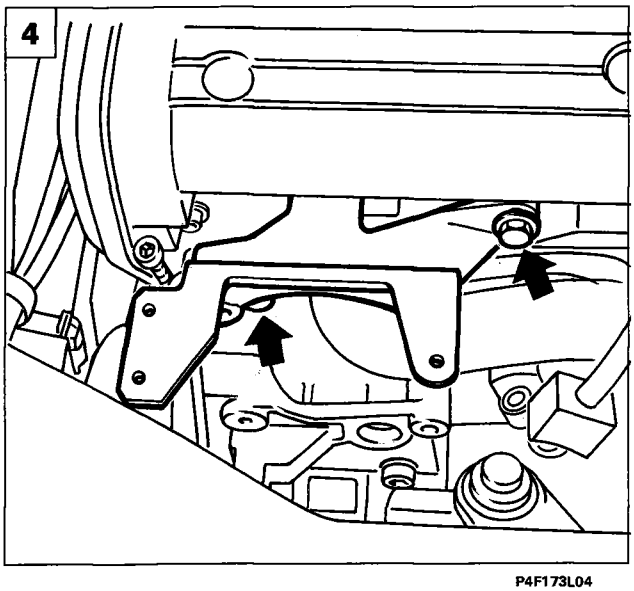

P4F173L04

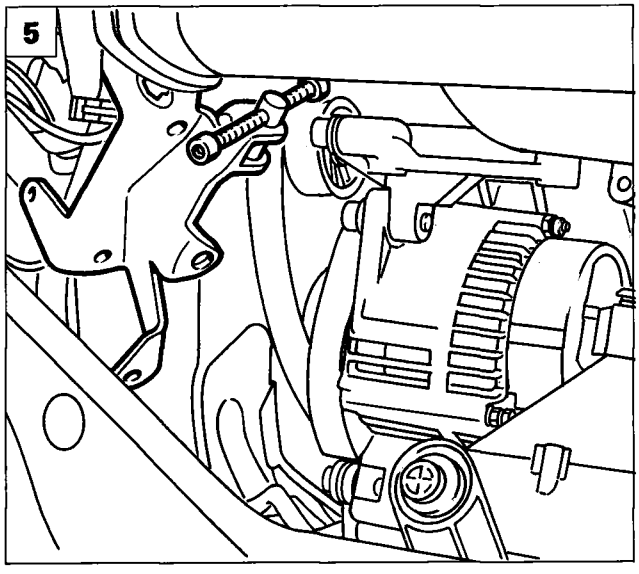

P4F173L05

Copyright Fiat Auto

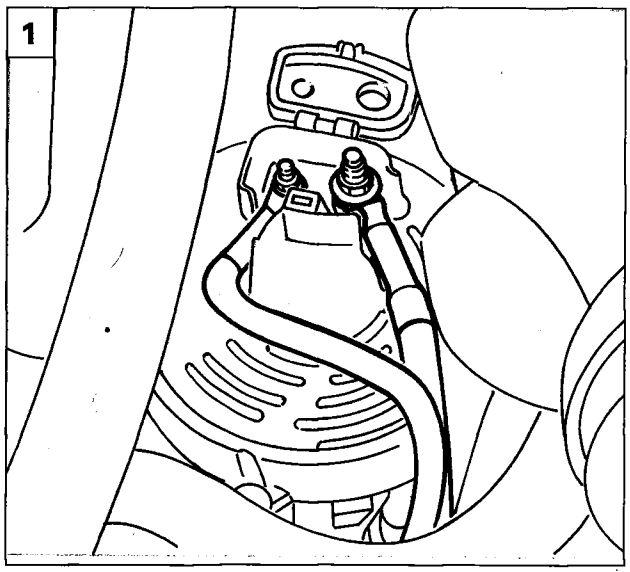

P4F174L01

1. Raise the vehicle and disconnect the alternator electrical connections.

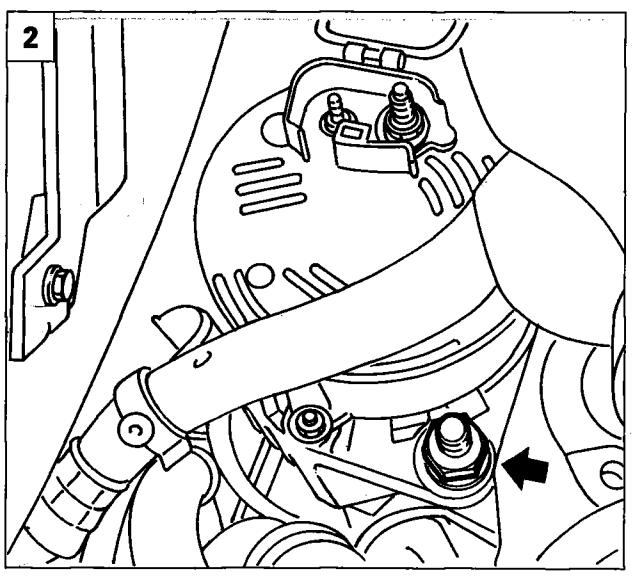

P4F174L02

2. Unscrew lower alternator retaining bolt.

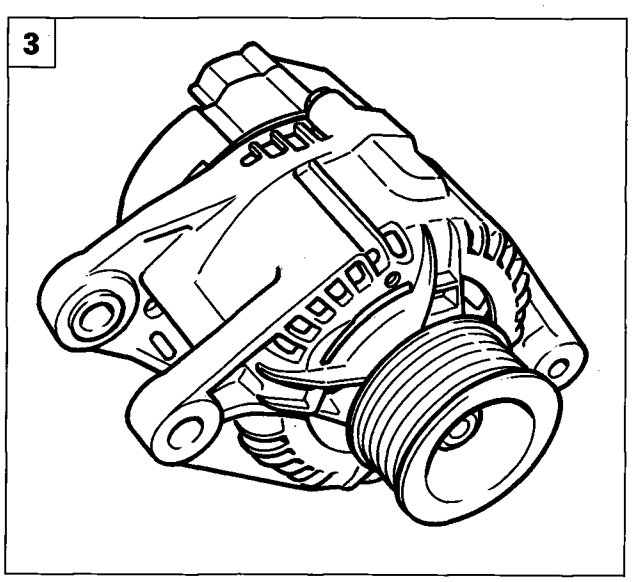

P4F174L03

3. Lower the vehicle and remove the upper alternator retaining bolt. Then remove from the vehicle.

NOTE *When servicing the alternator, refer to the procedure shown on the previous page for another version.*

Removing-refitting (engine 1910 TD) (*)

Removing-refitting (engine 2387 TD) (*)

(*) due to be published in a new edition

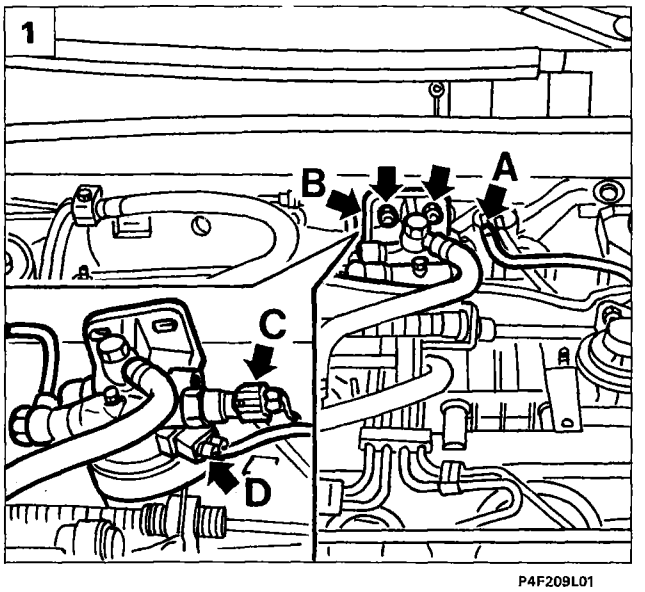

P4F209L01

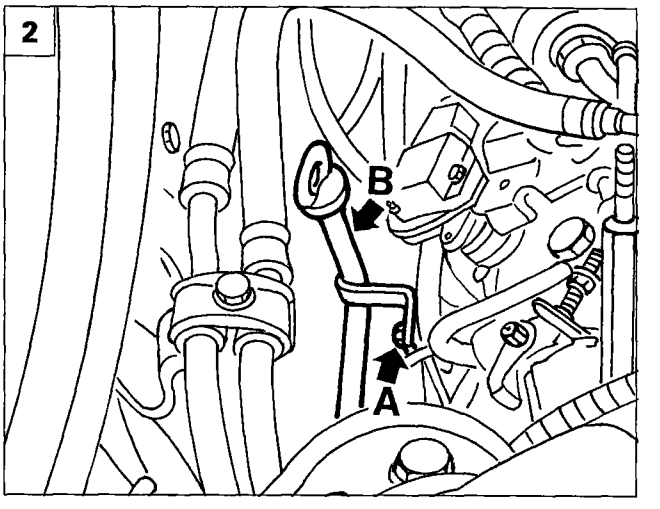

P4F209L02

1. Disconnect the pipe indicated from end (A).
   Unscrew the bolts fastening fuel filter (B) and move slighly to one side. Disconnect fuel filter connectors (C) and (D) and then move out of the way.
2. Unscrew upper oil dipstick retaining screw (A).
3. Remove the right front wheel and raise the vehicle.
   Unscrew bolts (A) and remove retaining caps (B) then remove the right front wheel guard.
4. Use a wrench to loosen belt tensioner (A) and disconnect from alternator pulley (B).
5. Unscrew screw (A) from the oil dipstick pipe (C).
   Disconnect both clips (B) from the wiring and remove the pipe with oil dipstick (C) from the vehicle.
   Disconnect electrical connections (D) from the alternator.

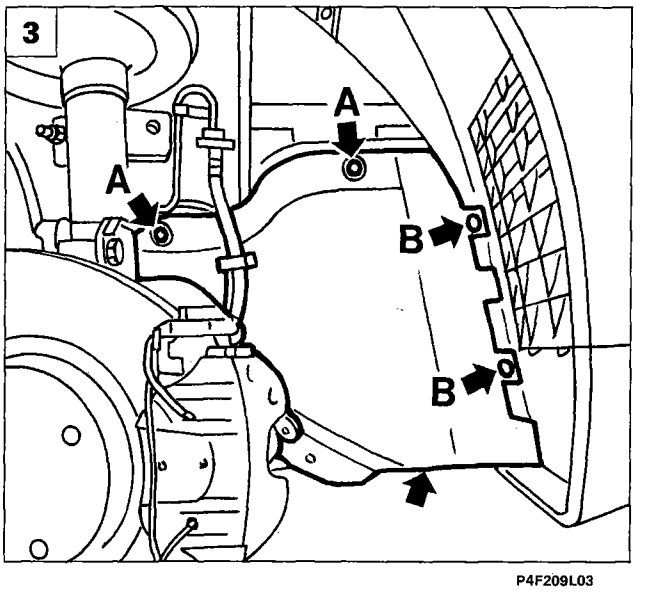

P4F209L03

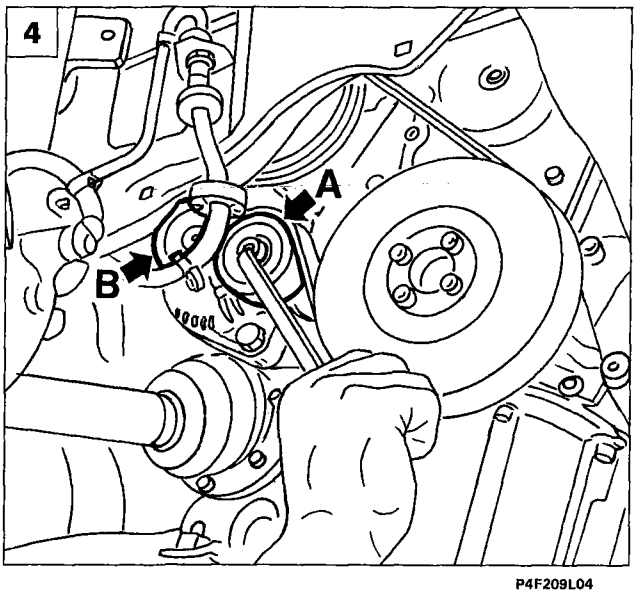

P4F209L04

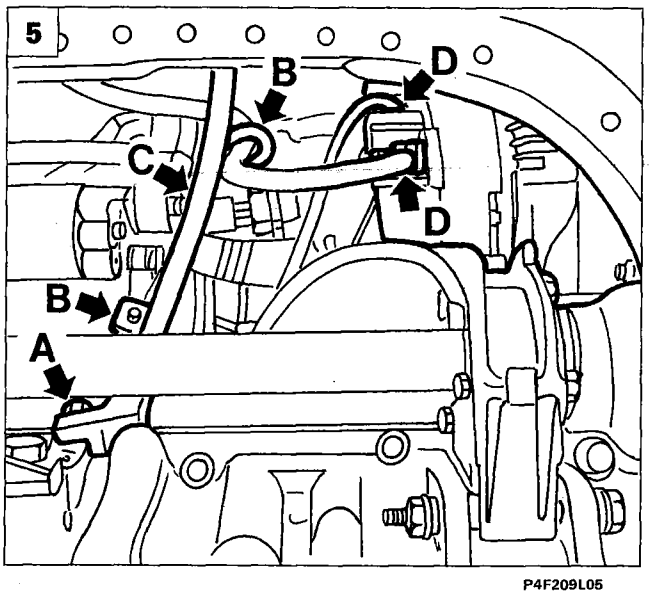

P4F209L05

4F204L

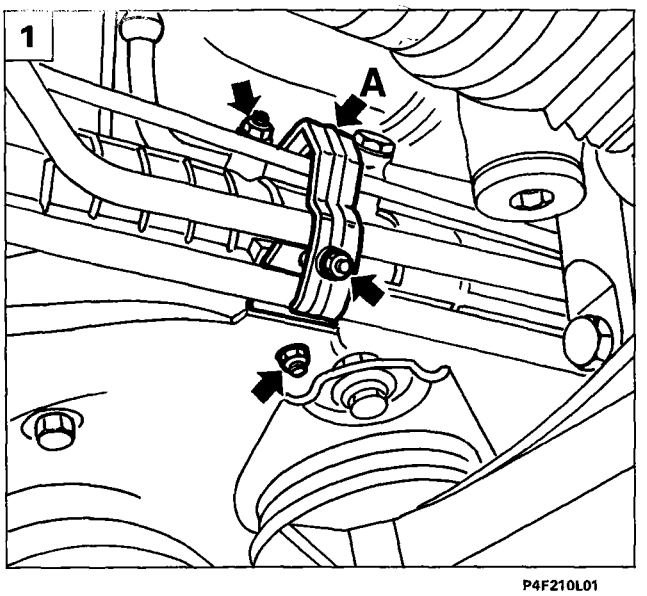

P4F210L01

1. Disconnect power steering pipe mount (A) after unscrewing the retaining nuts indicated.
2. Position a lift beneath the central rear gearbox mount (A) as shown in the figure. Then raise slightly.
   Unscrew mount bolts (B) and allow the engine-gearbox assembly to lower.
3. Unscrew both alternator retaining bolts, then move slighly to one side.
4. Remove the alternator by turning and pulling out.

NOTE *To refit, reverse removal instructions. Refit the alternator in the vehicle in the position shown in figure 3 for easier access.*

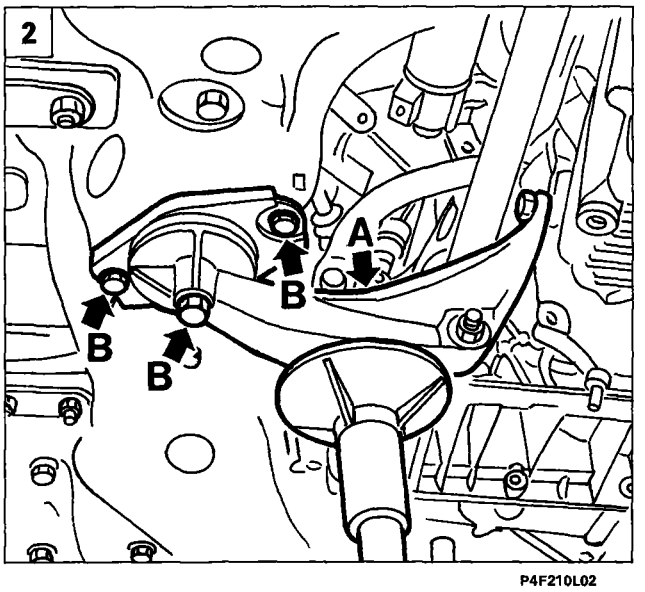

P4F210L02

NOTE *To service the alternator, refer to the procedure described on the previous page for another engine version.*

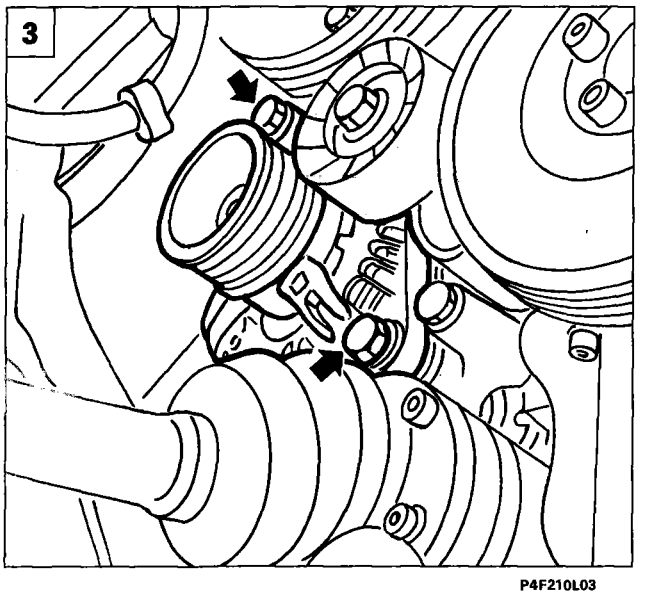

P4F210L03

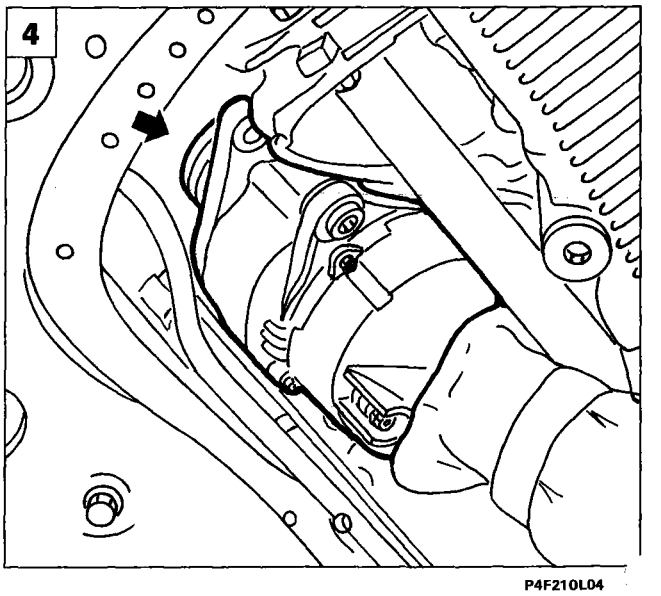

P4F210L04

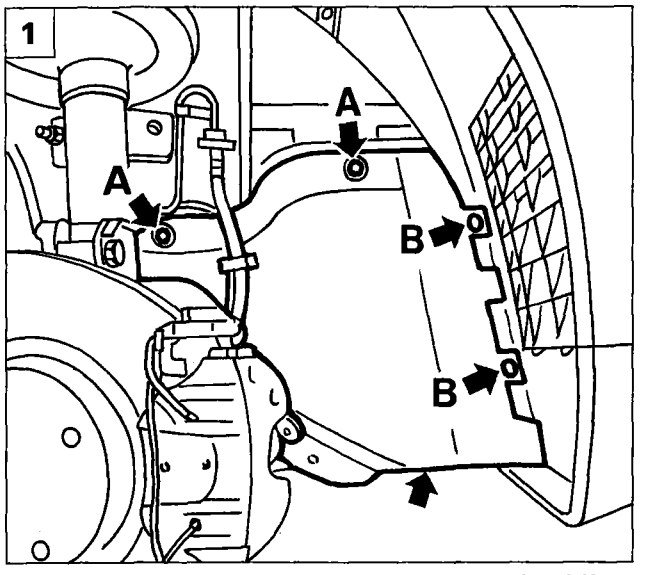

P4F209L03

REMOVING-REFITTING (Engine 2387TD)

- Remove the starter motor as described previously.
- Remove the right front wheel.

1. Unscrew bolts (A) and remove retaining caps (B) then remove the right front wheel guard.
2. Loosen belt tensioner bolt (A).
   Fit tool 1860966000 to the hexagonal socket (B) and turn in the arrowed direction to loosen the drive belt until it can be removed at point (C); remove the belt from alternator pulley (D).
3. Open cover (A) and disconnect connections (B and C) from the alternator.
4. Unscrew lower alternator bolts (A) and upper alternator bolts (B).

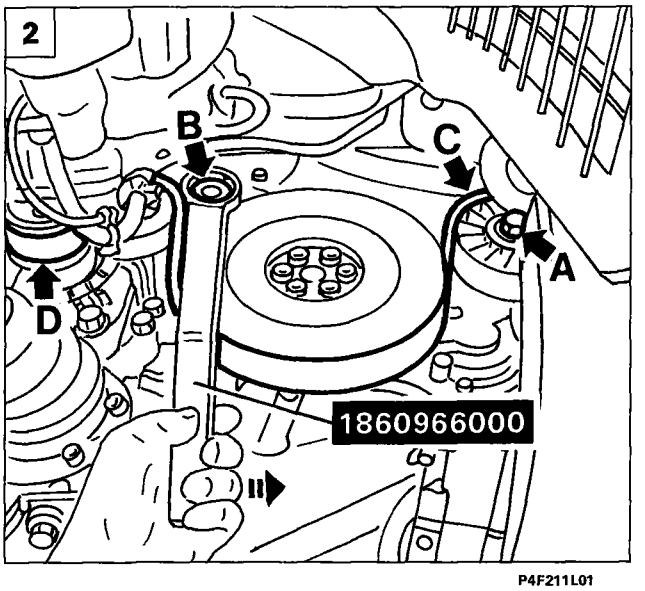

P4F211L01

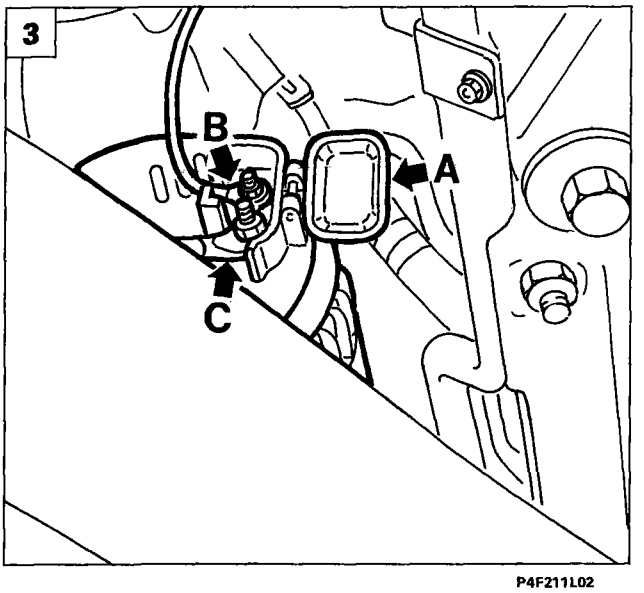

P4F211L02

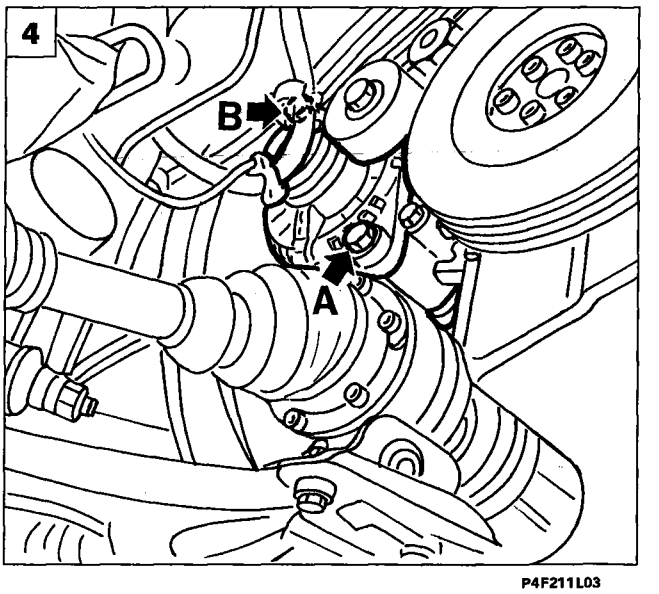

P4F211L03

4F206L

55.

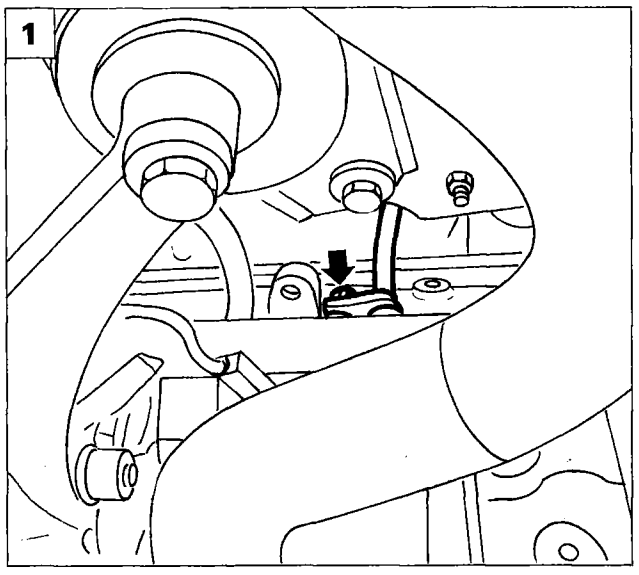

P4F212L01

1. Unscrew lower bolt fastening the oil dipstick.
2. Lower the lift and unscrew the upper oil dipstick screw, then remove from the engine.
3. Unscrew bolts from the oil vapour separator (A) then move slightly.
4. Remove the alternator from the compartment left free by the oil vapour separator.

NOTE *Reverse order of removal operations to refit.*

NOTE *To service the alternator, refer to the instructions given on the previous pages for another engine version.*

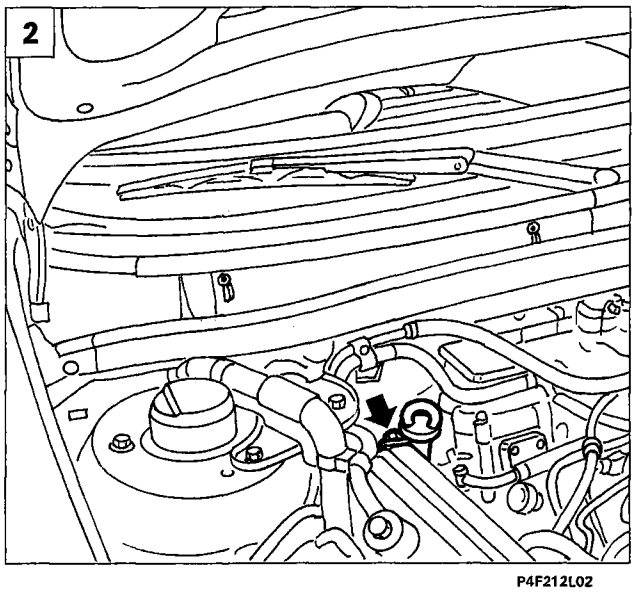

P4F212L02

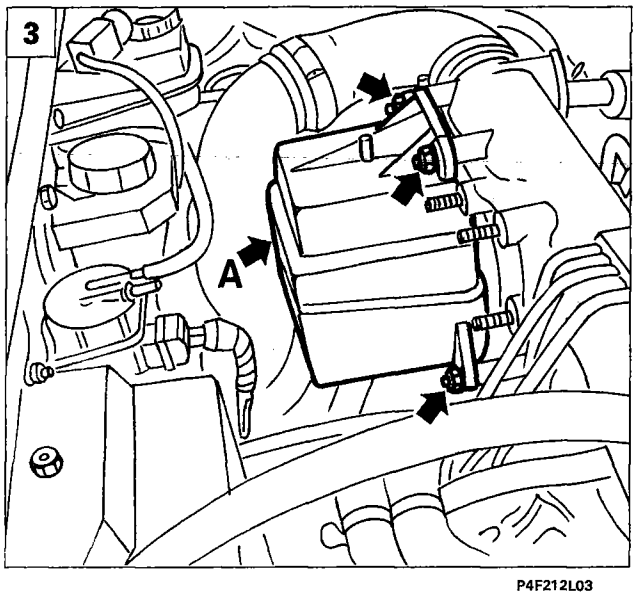

P4F212L03

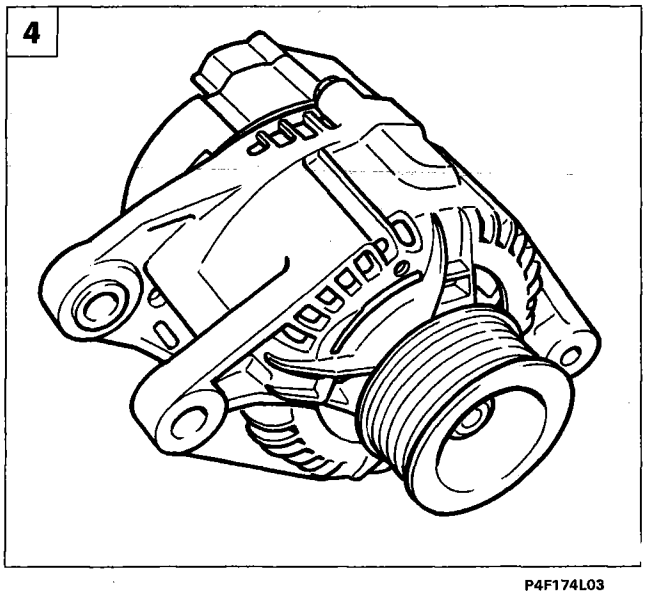

P4F174L03

4F207L

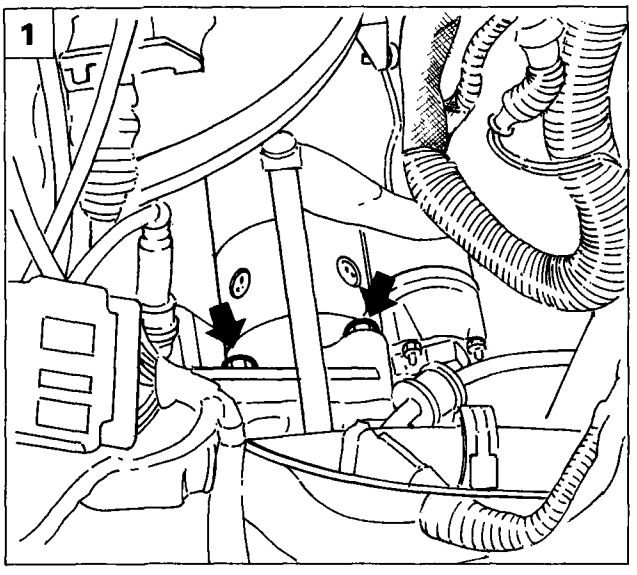

P4F175L01

Before removing as described in this paragraph, disconnect the battery negative terminal.

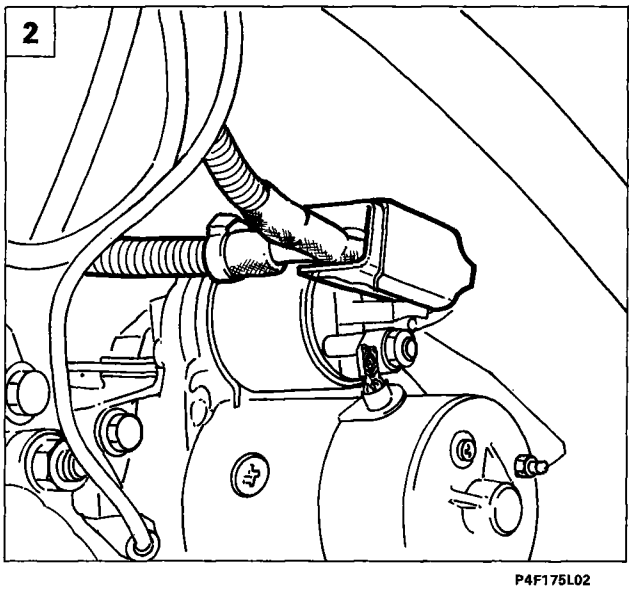

P4F175L02

STARTER MOTOR

Removing-refitting (engine 1370)

1. Position the vehicle on a mobile lift and raise the bonnet. Undo the upper bolts retaining the starter motor to the power unit.
2. Raise the vehicle, then disconnect the starter motor electrical connections.
3. Unscrew lower bolt fastening the starter motor to the power unit.
4. Disconnect starter motor from vehicle.

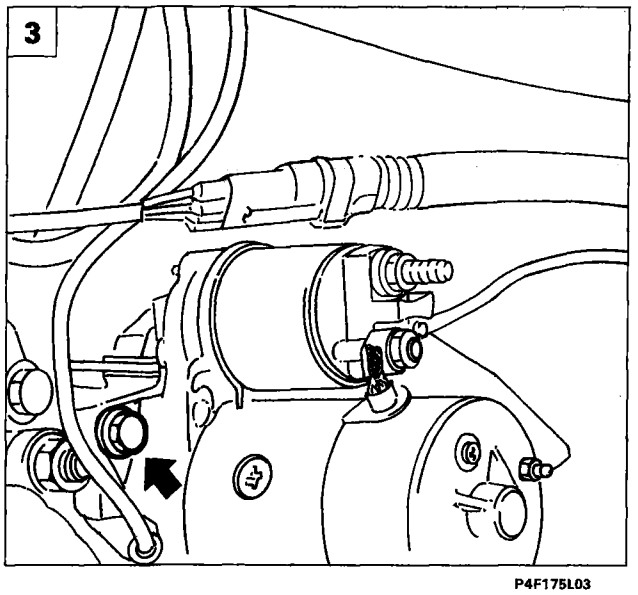

P4F175L03

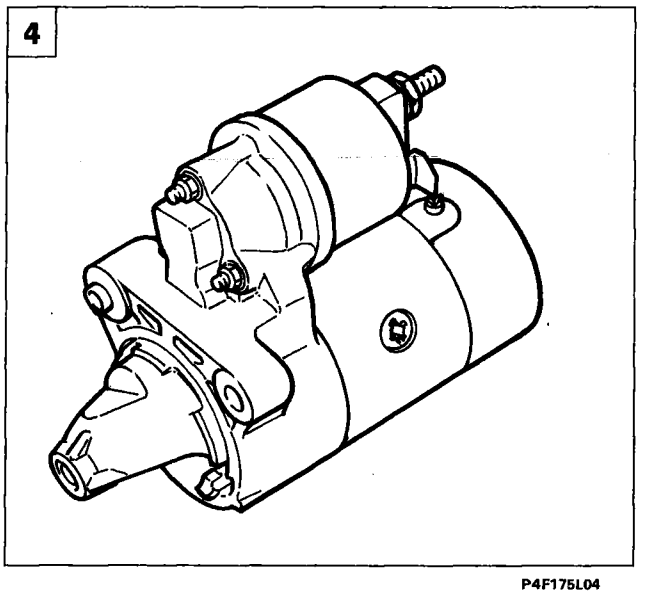

P4F175L04

Copyright Fiat Auto

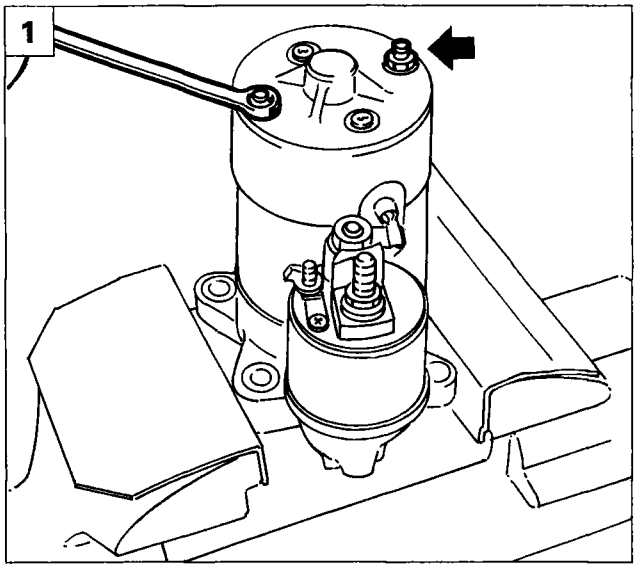

P4F176L01

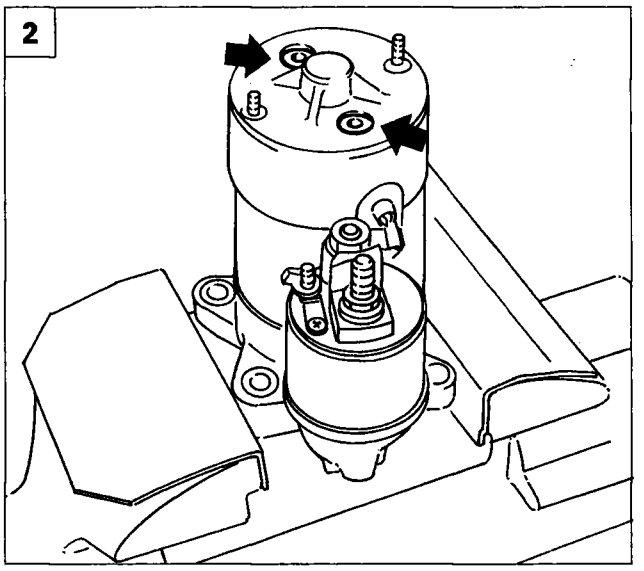

P4F176L02

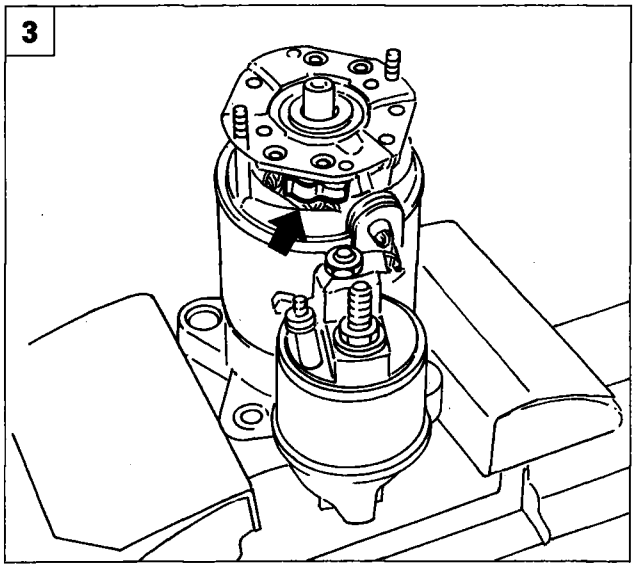

P4F176L03

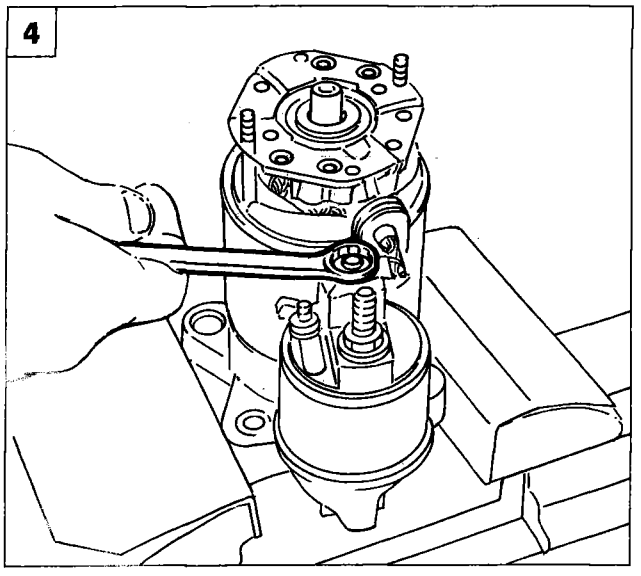

P4F176L04

Bench overhaul

1. Position the starter motor as shown in the figure and unscrew the bolts indicated.
2. Unscrew the bolts indicated and withdraw the starter mtor steel protection.
3. Take the pressure off the brushes by positioning the tabs as shown in the figure.
4. Unscrew electrical connection retaining nut indicated.

1

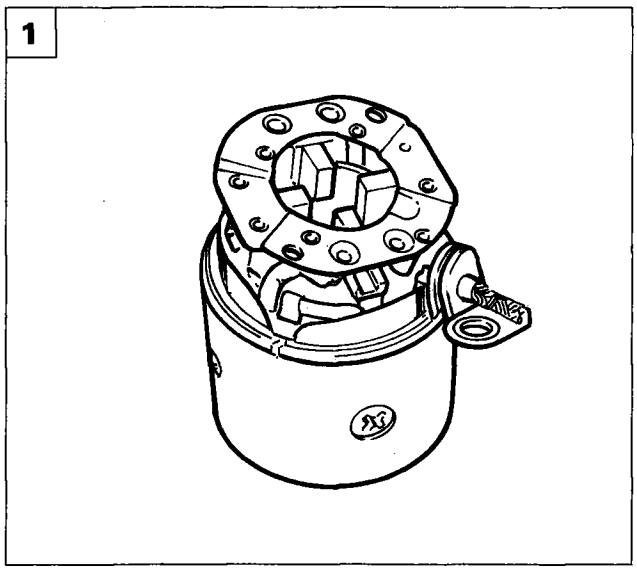

P4F177L01

2

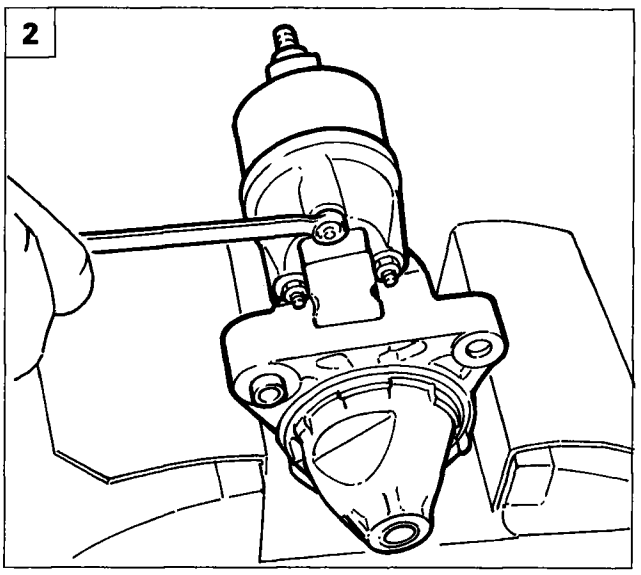

P4F177L02

3

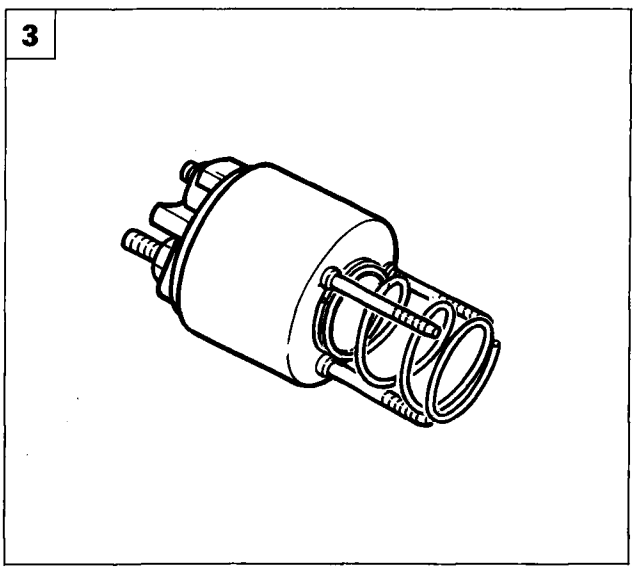

P4F177L03

1. Remove the brush carrier stator-plate from the starter motor.
2. Unscrew nuts indicated which retain the solenoid to the starter motor.
3. Remove the solenoid.
4. Remove the spring guide bush from the starter motor.
5. Use a screwdriver to remove and extract the pinion engagement rotor-fork from the front starter motor mount.

4

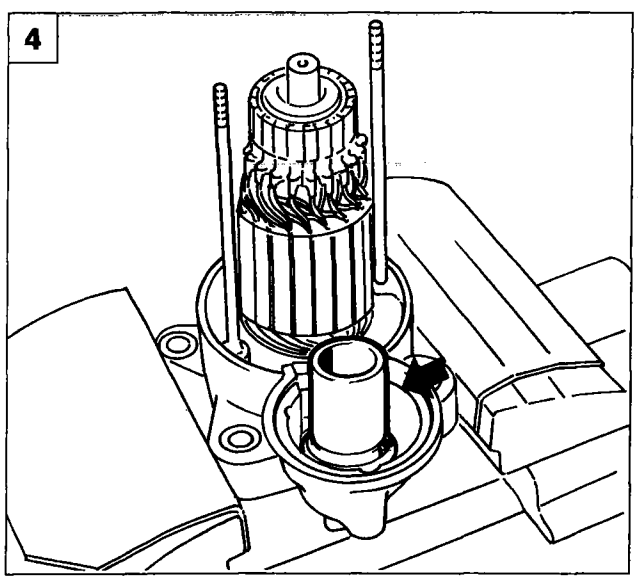

P4F177L04

5

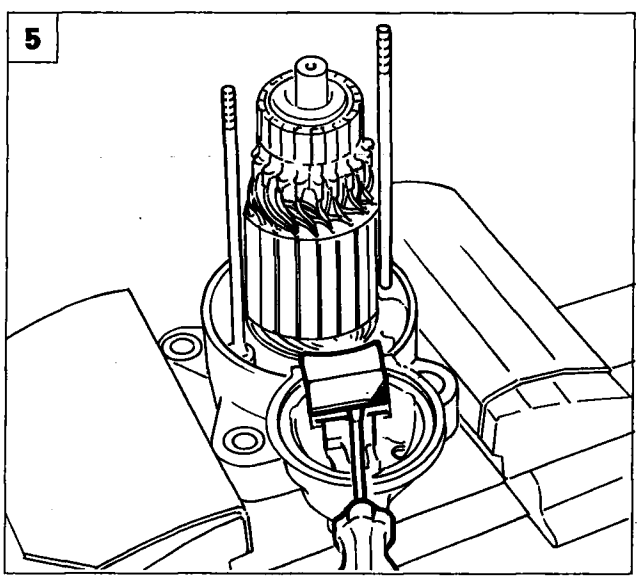

P4F177L05

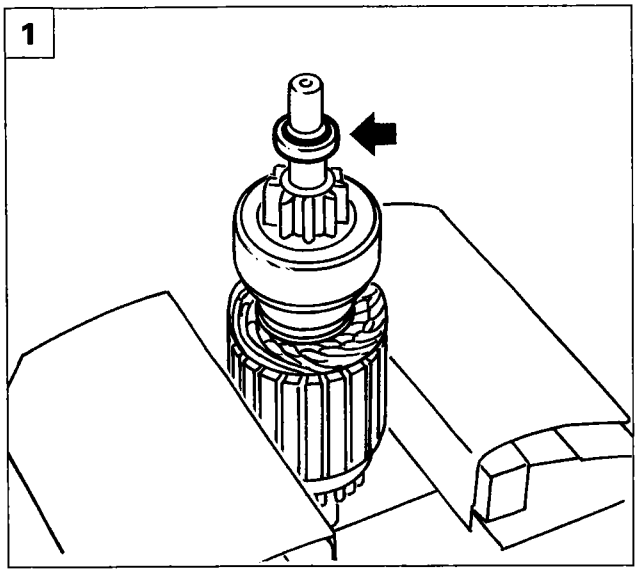

P4F178L01

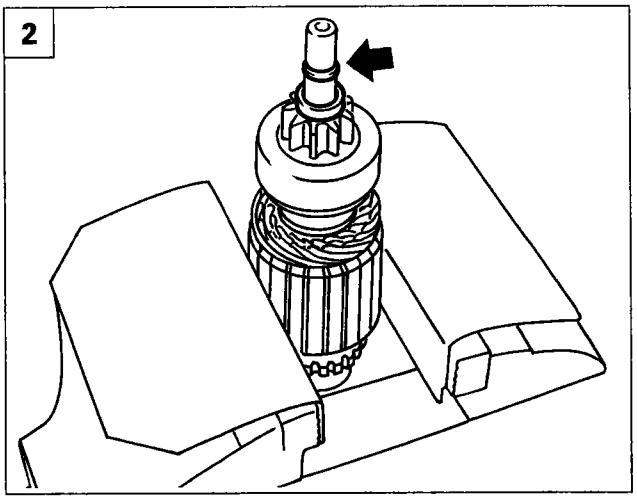

P4F178L02

1. Prise up and lower the retaining ring indicated.
2. Remove the retaining ring from the rotor shaft.
3. Remove the free wheel from pinion from the rotor.

To refit, reverse the order of disassembly operations.

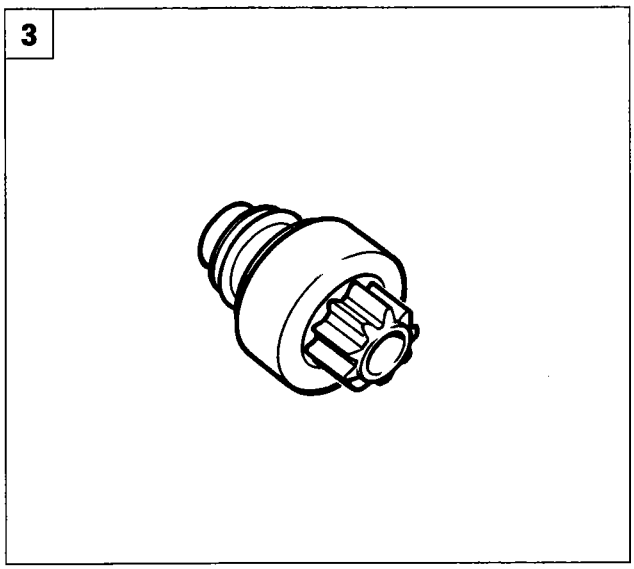

P4F178L03

Starter motor components

A. Front mount
B. Solenoids
C. Spring guide bush
D. Safety buffer
E. Pinion engagement fork
F. Rear mount
G. Brush carrier stator-plate assembly
H. Rotor-pinion assembly with free wheel

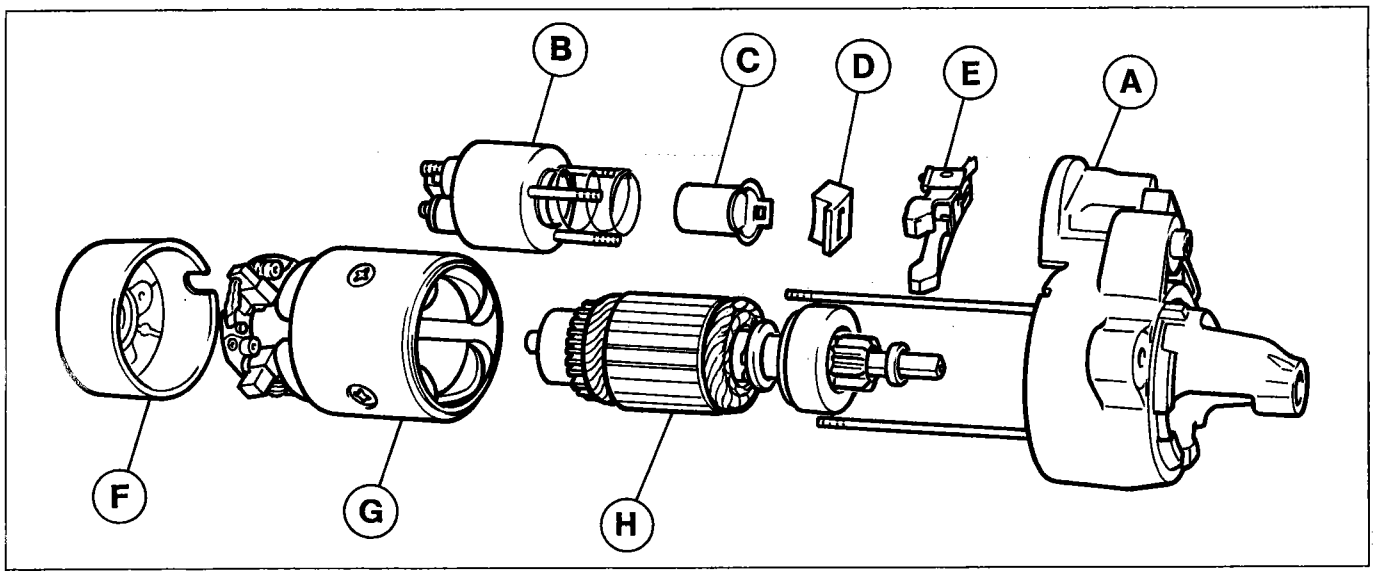

P4F178L04

Checks

Carry out the following tests on the starter motor:

rotor: test continuity, short-circuits and earth insulation
stator: test continuity and earth insulation
brush carrier mount: earth insulation
solenoids: test continuity and earth insulation

When the starter motor engages noisily upon start-up, replace the pinion-free wheel.

Starter motor operation fault diagnosis

1. The engine will not turn

Cause may be:

- battery terminals and/or fittings oxidised;
- starter motor supply lead fitting and/or terminal loose;
- starter motor supply lead terminal broken or oxidised;
- battery completely flat;
- no contact between brushes and commutator;
- positive brush short-circuited;
- starter switch contacts oxidised, worn or cut out due to interposition of fragments;
- field winding or induction winding earthed;
- field winding or commutator centrifuged
- pinion engagement solenoid winding interrupted or earthed.

2. Engine turns very slowly

The cause may be:

- commutator brushes and terminals worn;
- part of induction or field winding coils short-circuited;
- battery terminals and fittings oxidised;
- battery charge very low, or one or more elements damaged.

3. Excessive noise upon starting

The cause may be:

- pinion free wheel mechanism worn;
- poor alignment between engine and engine flywheel ring gear;
- some engine flywheel ring gear teeth excessively worn on engagement side;
- speed reduction unit defective or excessively worn.

Copyright Fiat Auto

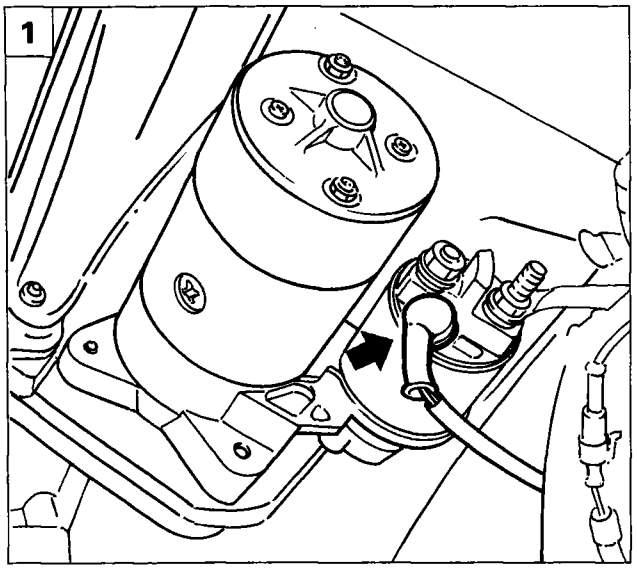

P4F180L01

Removing-refitting (engine 1581)

- Place the vehicle on a lift.

1. Raise the vehicle and pull away starter motor supply contact protective boot.

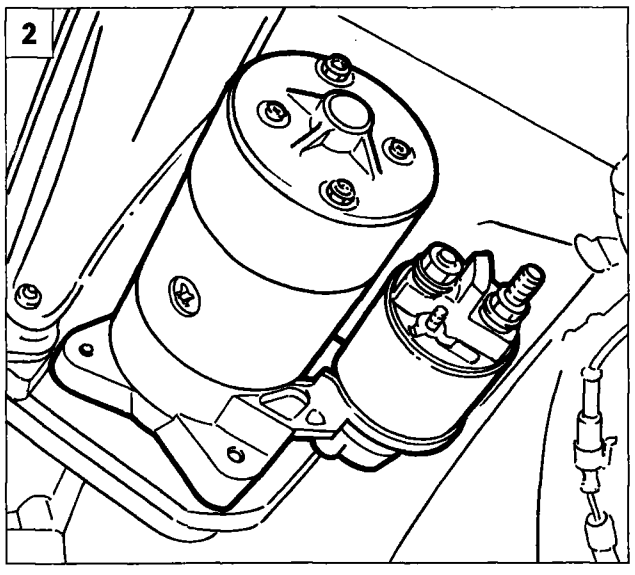

P4F180L02

2. Disconnect the starter motor supply contacts.

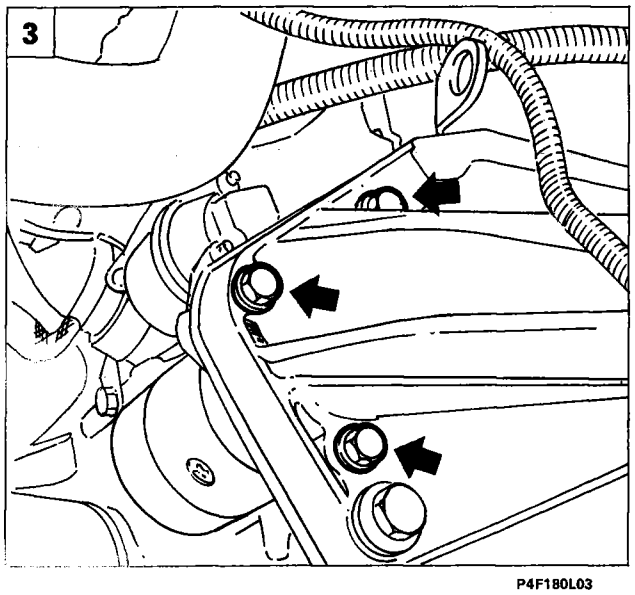

P4F180L03

3. Unscrew the bolts fastening the starter motor to the power unit and remove from the vehicle.

NOTE *To service and check the starter motor, refer to information given in previous pages for another engine version.*

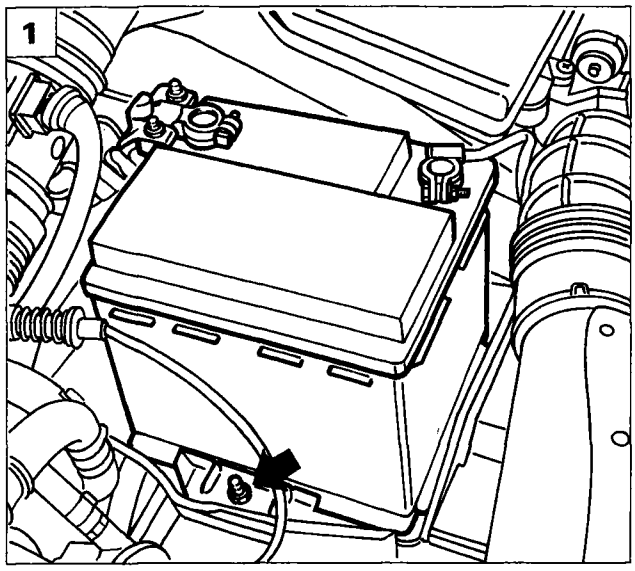

P4F181L01

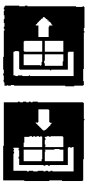

Removing-refitting (engine 1747)

1. Unscrew nut indicated and remove the vehicle battery.

NOTE *To remove the cover on the battery positive lead, proceed as described in the previous pages.*

2. Remove the flow meter from the body by unscrewing the bolts indicated.
3. Disconnect the connections and clips, then remove the flow meter with pipes from the vehicle.
4. Unscrew the bolts fastening the butterfly valve case and place to one side.

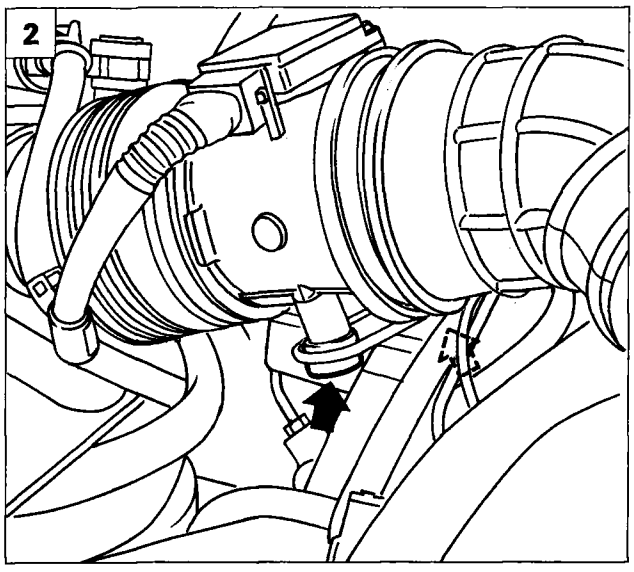

P4F181L02

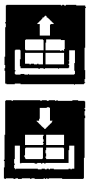

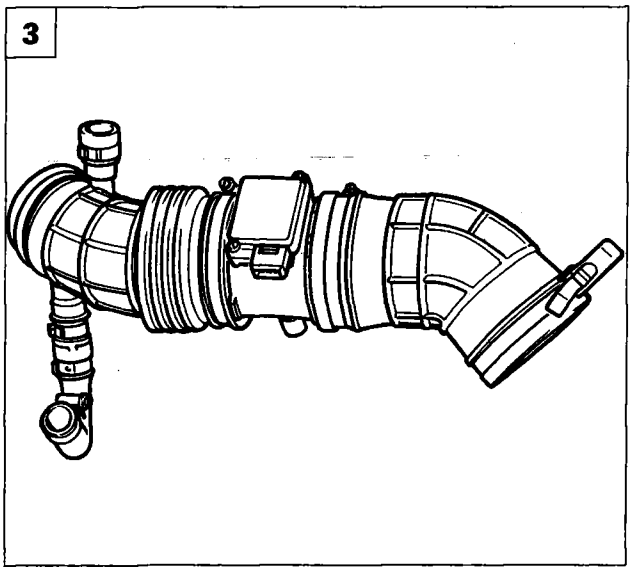

P4F181L03

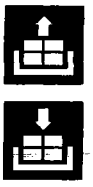

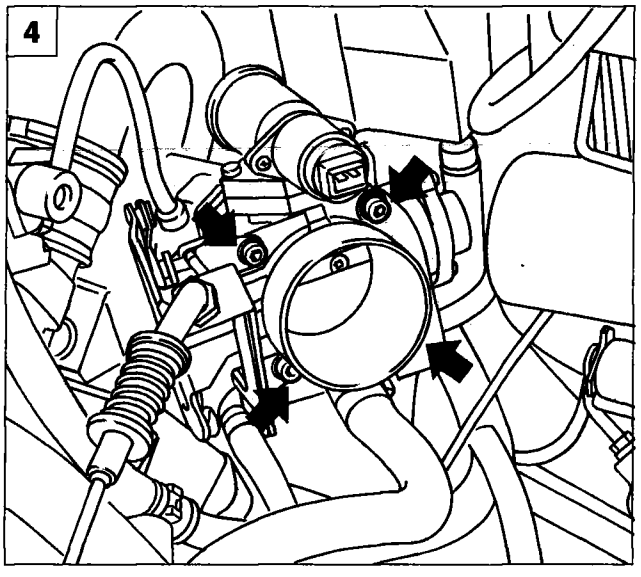

P4F181L04

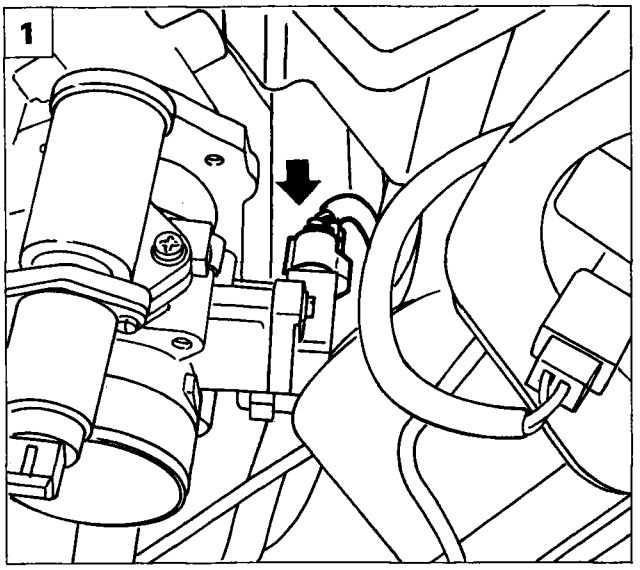

P4F182L01

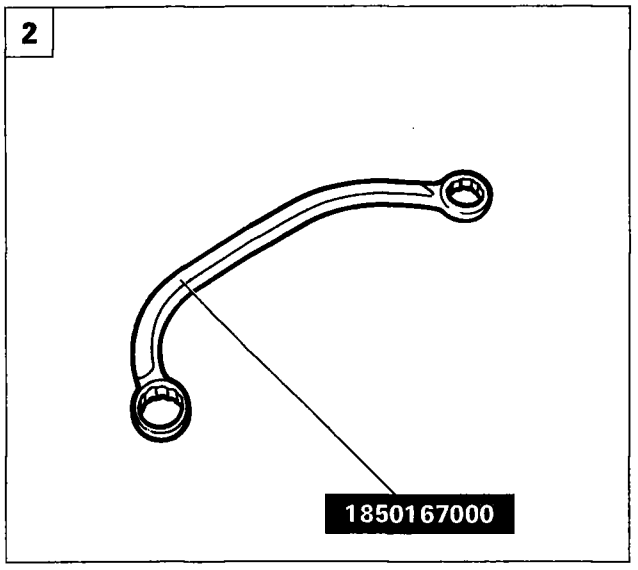

P4F182L02

1. Disconnect connector indicated and move the butterfly valve case aside to gain access to the starter motor.
2. Use tool 1850167000 to unscrew the bolts retaining the top of the starter motor to the power unit.
3. Raise the vehicle and unscrew bolt retaining the bottom of the starter motor to the power unit.
4. Remove the starter motor from the vehicle.

NOTE *Refer to information given in previous pages for another version for starter motor servicing and checks.*

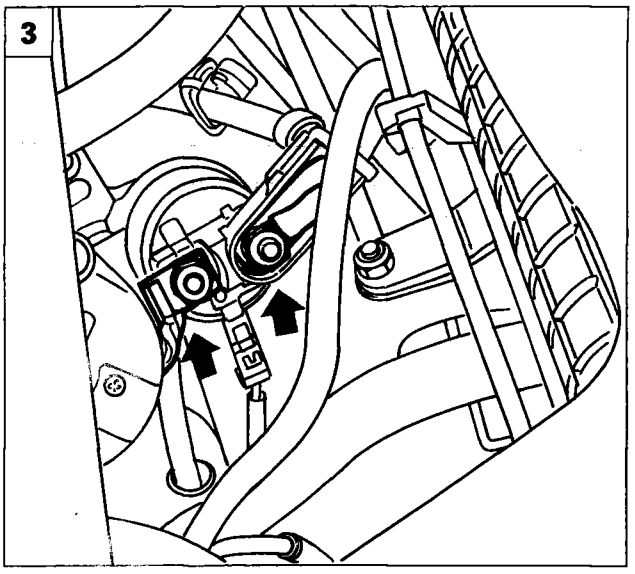

P4F182L03

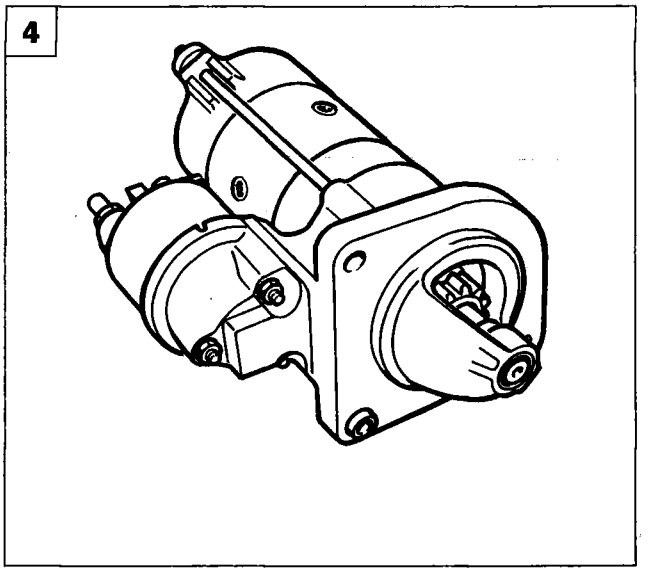

P4F182L04

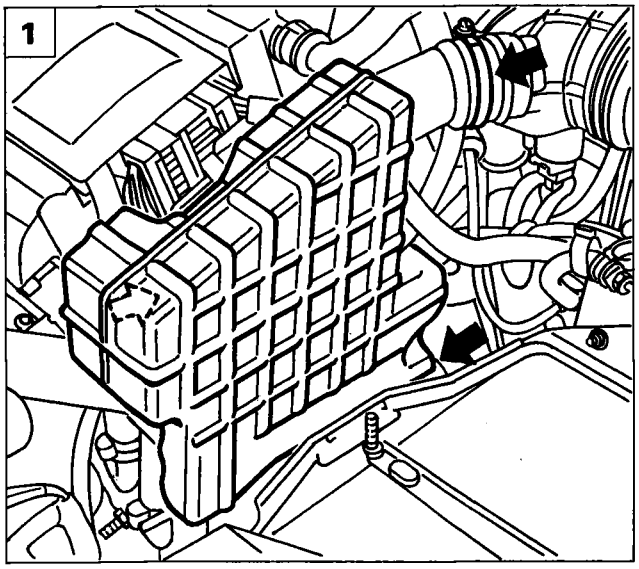

P4F183L01

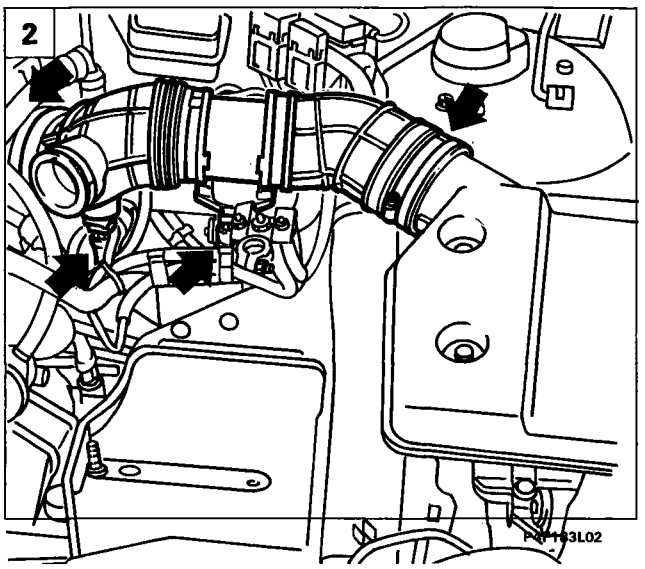

P4F183L02

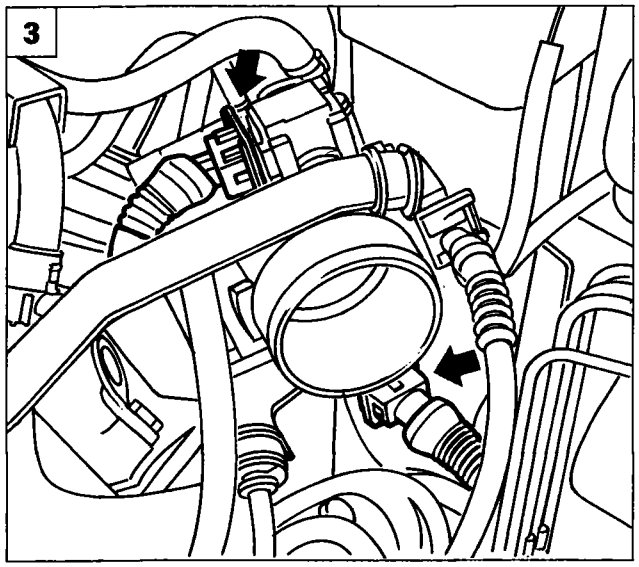

P4F183L03

Removing-refitting (engine 1998)

1. Remove battery, unscrew bolts and clip indicated and take out the resonator.
2. Unscrew clips and disconnect connections shown. Then remove the air duct connecting flow meter to air cleaner.
3. Disconnect connections on flow meter.
4. Unscrew the bolts fastening the flow meter, move to one side and unscrew the upper starter motor retaining bolts.
5. Raise the vehicle and remove the supply connections. Unscrew the lower retaining bolt and remove the starter motor from the vehicle.

NOTE *To overhaul and check the starter motor, refer to information given on previous pages for another version.*

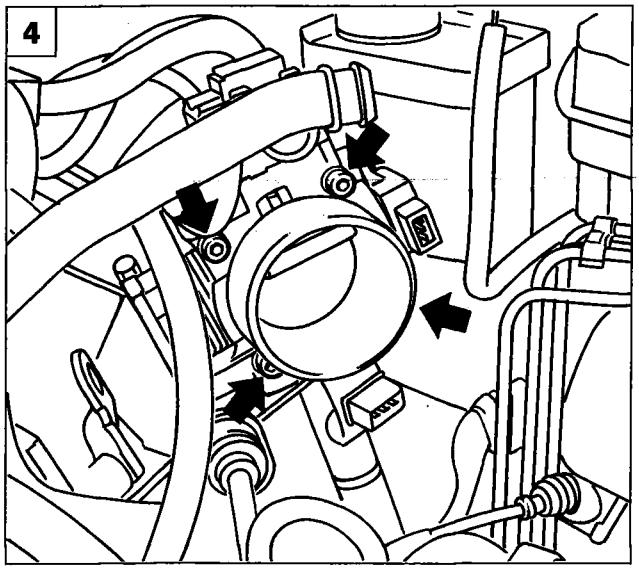

P4F183L04

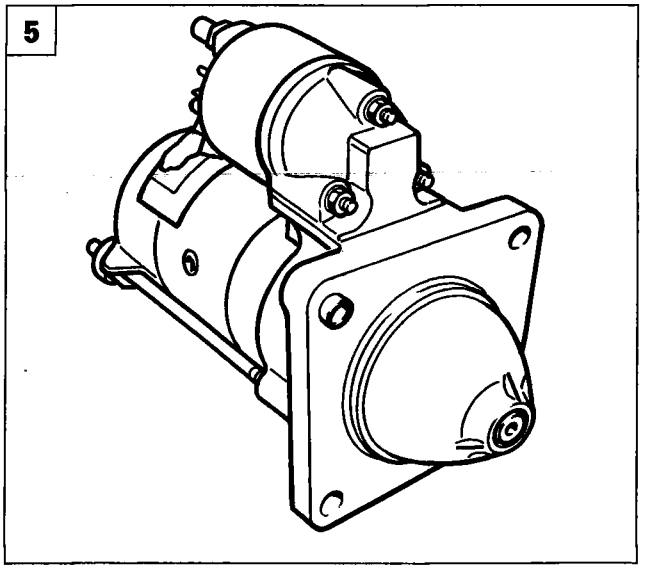

P4F183L05

55.

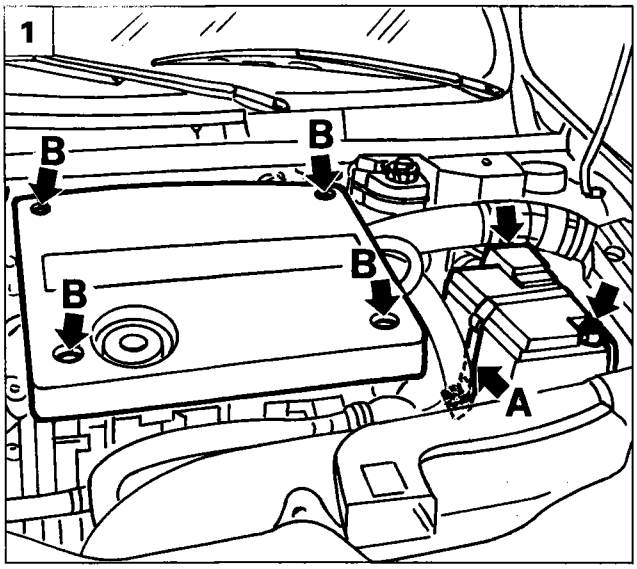

P4F214L01

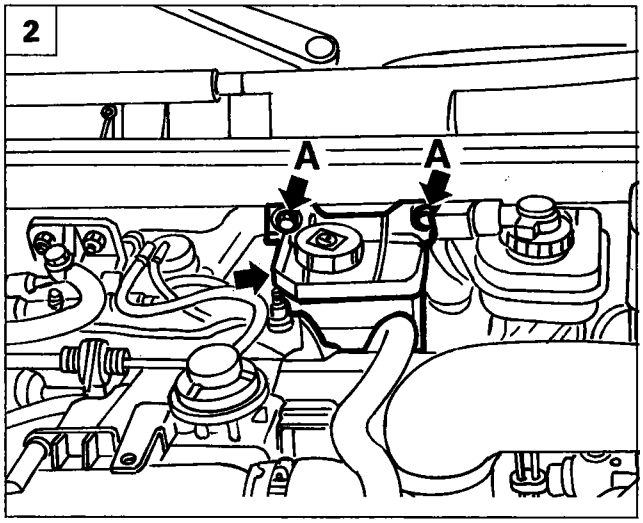

P4F214L02

REMOVING-REFITTING (Engine 1910TD)

- Position the vehicle on a stand.

1. Open the bonnet lid and remove the battery after disconnecting the electrical terminals and the retaining bracket (A).
   Disconnect the engine protection after unscrewing nuts (B).
2. Unscrew bolts (A) and move the power steering reservoir to one side.
3. Unscrew both upper starter motor bolts and move square (A) out of the way.
4. Raise the vehicle and remove the lower engine protection (A) after unscrewing the retaining bolts.
5. Disconnect supports (A) and (B) from the exhaust pipe section after unscrewing the retaining bolts.
   Remove the exhaust pipe section (C) after disconnecting from flanges (D) and (E).

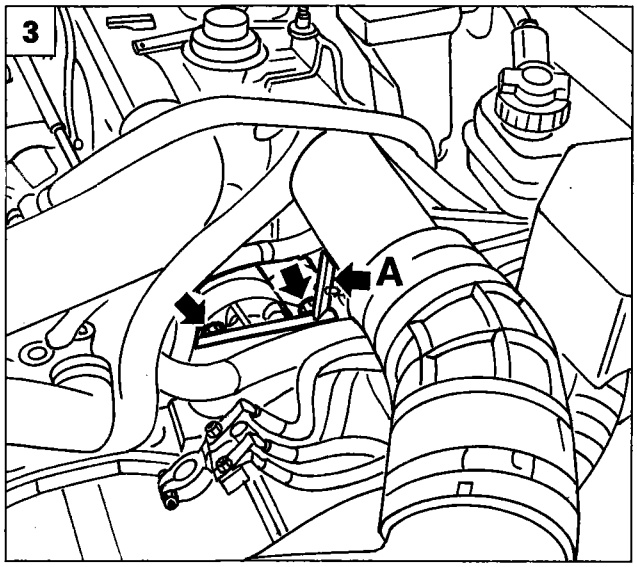

P4F214L03

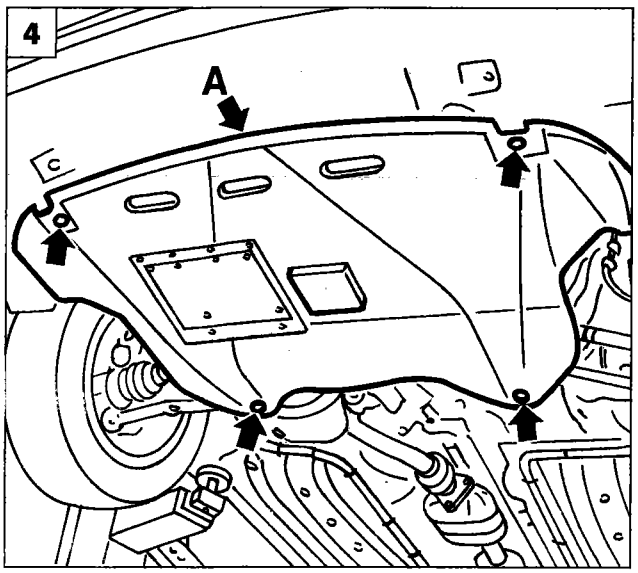

P4F214L04

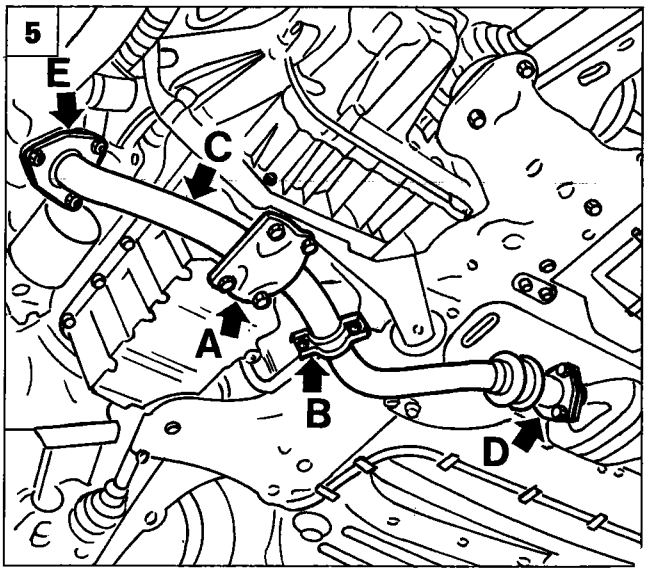

P4F214L05

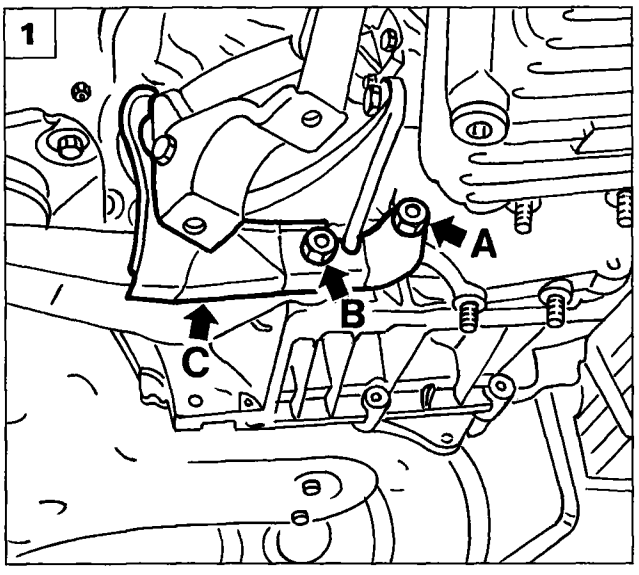

P4F215L01

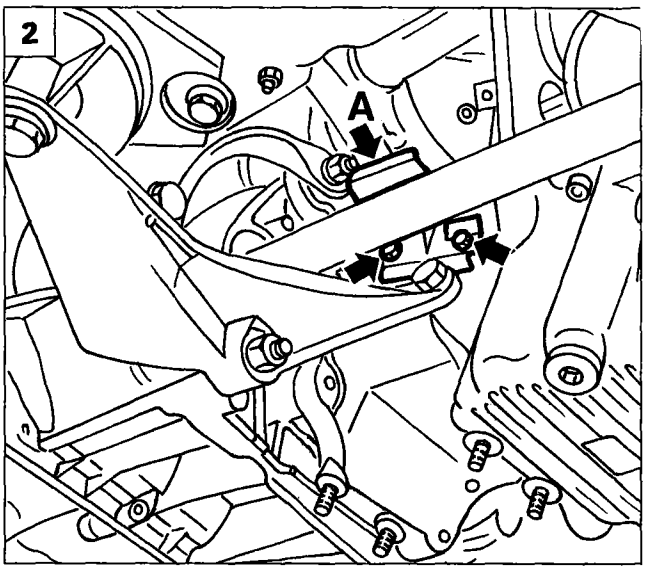

P4F215L02

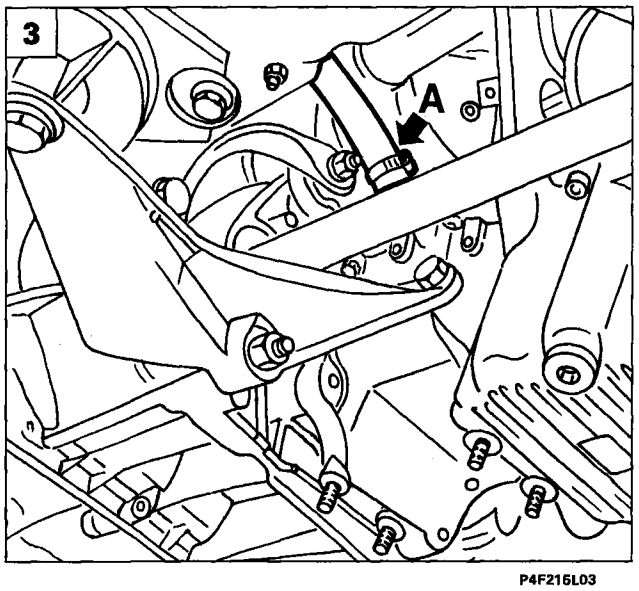

P4F215L03

1. Unscrew screw (A) and nut (B) then remove mount (C).
2. Remove housing (A) after unscrewing retaining bolts.
3. Disconnect end (A) of the pipe shown.
4. Disconnect connections (A) and (B) of the starter motor.
5. Unscrew lower starter motor screw (A), then disconnect and remove from underneath the vehicle.

NOTE *Reverse order of removal operations to refit.*

NOTE *To service and test the starter motor, refer to instructions given in previous pages for another engine version.*

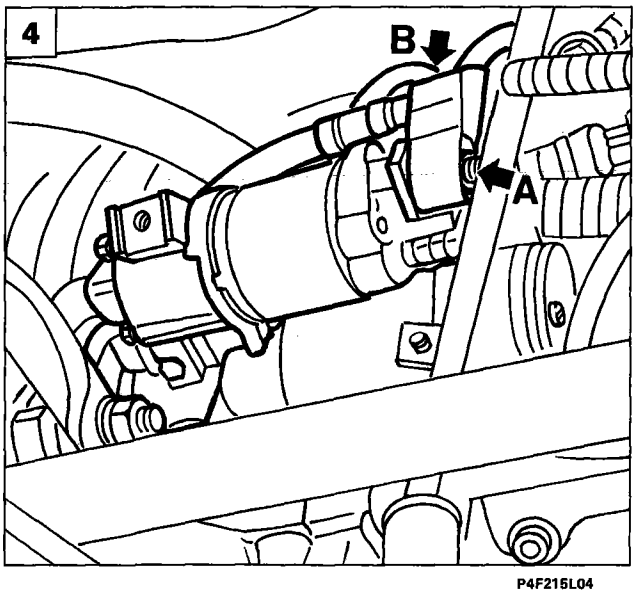

P4F215L04

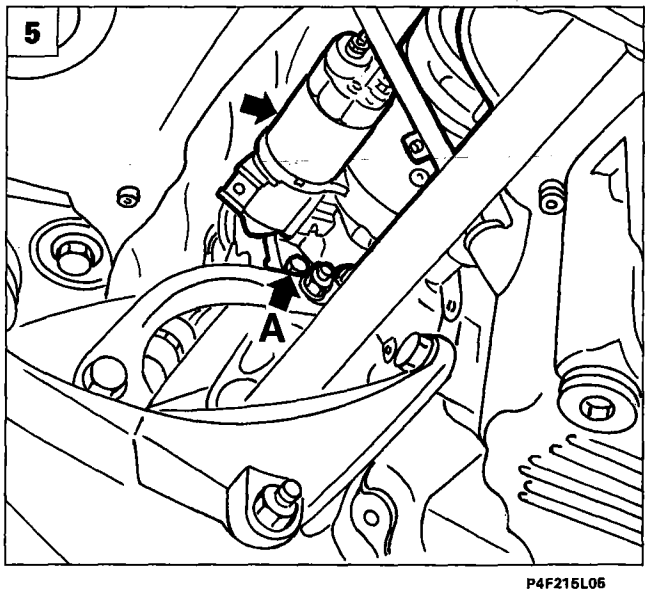

P4F215L05

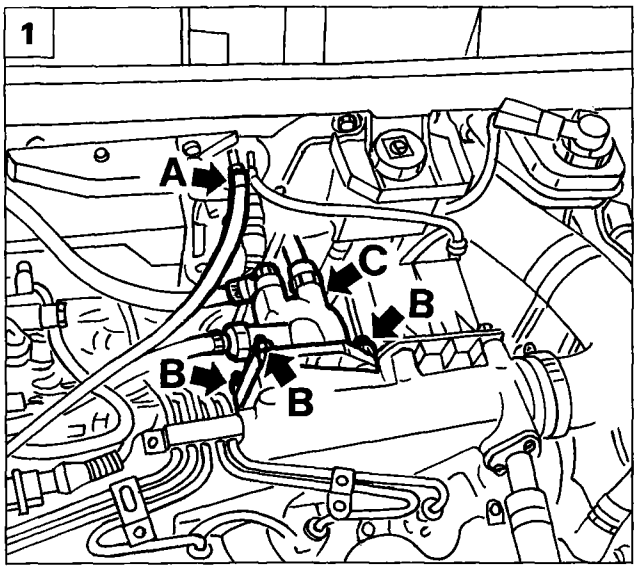

P4F216L01

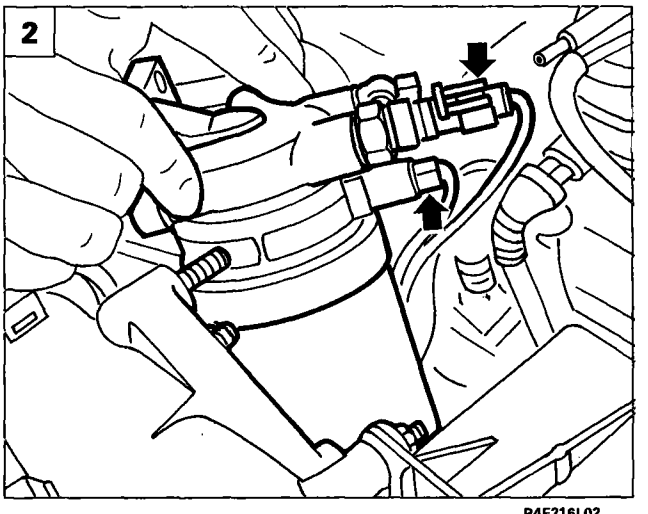

P4F216L02

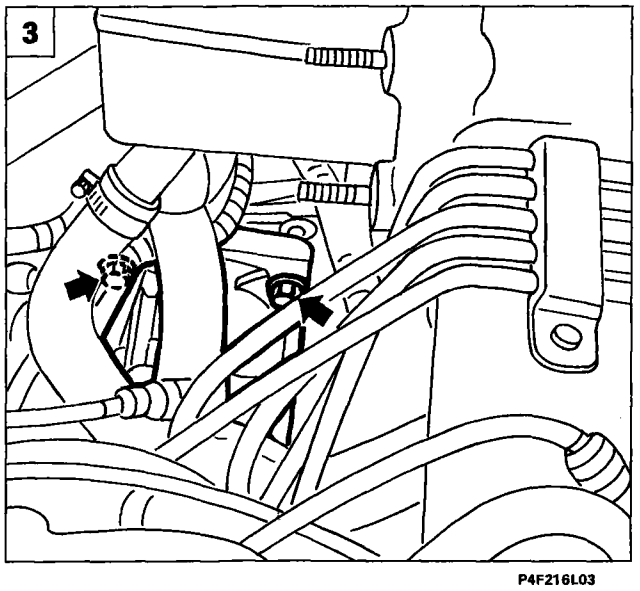

P4F216L03

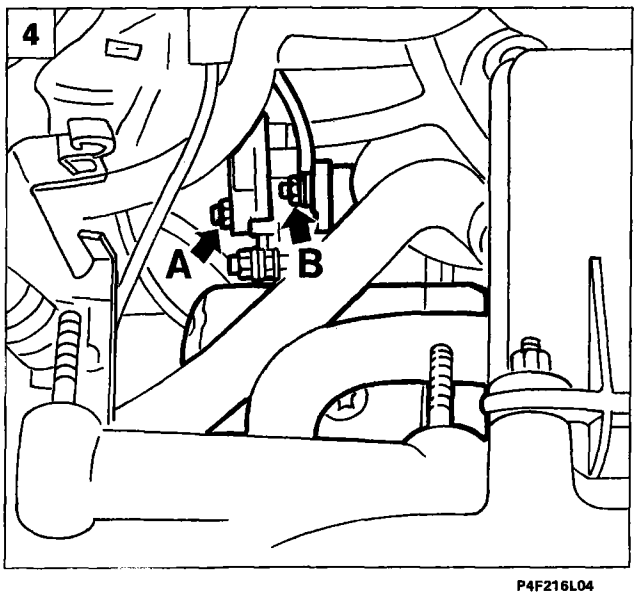

P4F216L04

REMOVING-REFITTING (Engine 2387TD)

1. Place the vehicle on a lift and open the bonnet lid.
   Disconnect pipe (A) from the side indicated.
   Unscrew nuts (B) and slightly move fuel filter (C).
2. Disconnect connectors and remove the fuel filter.
3. Unscrew both upper starter motor retaining bolts.
4. Disconnect supply connections (A) and (B).
5. Raise the vehicle; disconnect the oil vapour pipe from side (A).
   Unscrew lower starter motor bolt (B) and then remove from the vehicle.

NOTE *Reverse order of removal operations to refit.*

NOTE *To service and test the starter motor, refer to instructions given in previous pages for another engine version.*

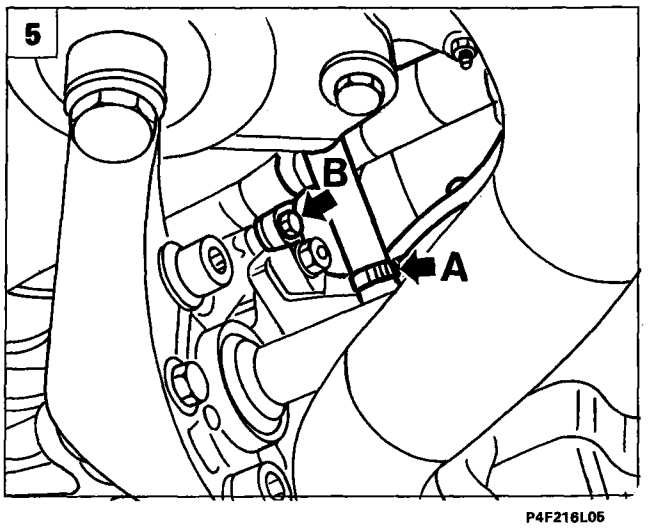

P4F216L05

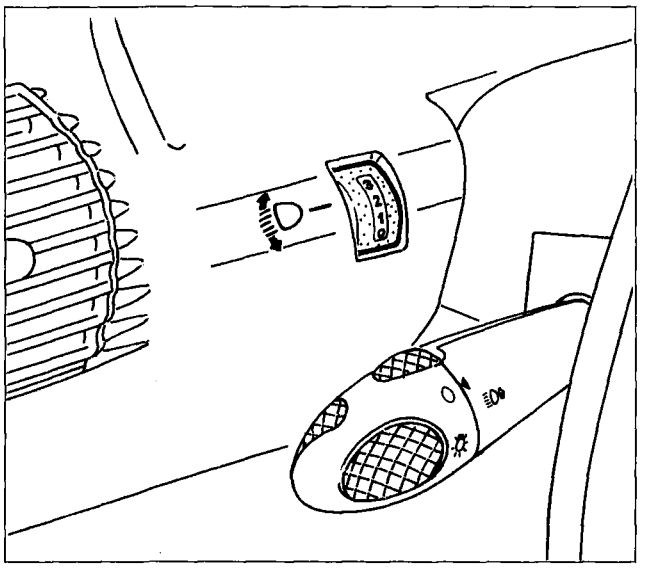

ELECTRIC HEADLAMP ALIGNMENT DEVICE

The front headlamp units are vertically aligned, according to car load, by means of a potentiometer on the control panel. Four numbers screen-printed onto the potentiometer correspond to four different load conditions.

- **Position 0:**
  driver alone or with a front seat passenger.
- **Position 1:**
  all seats occupied (5 people).
- **Position 2:**
  all seats occupied plus maximum permitted load in the luggage compartment.
- **Position 3:**
  driver only, plus a 400 kg load, all stowed in the luggage compartment.

Location of components and wiring harness for electric headlamp adjustment device

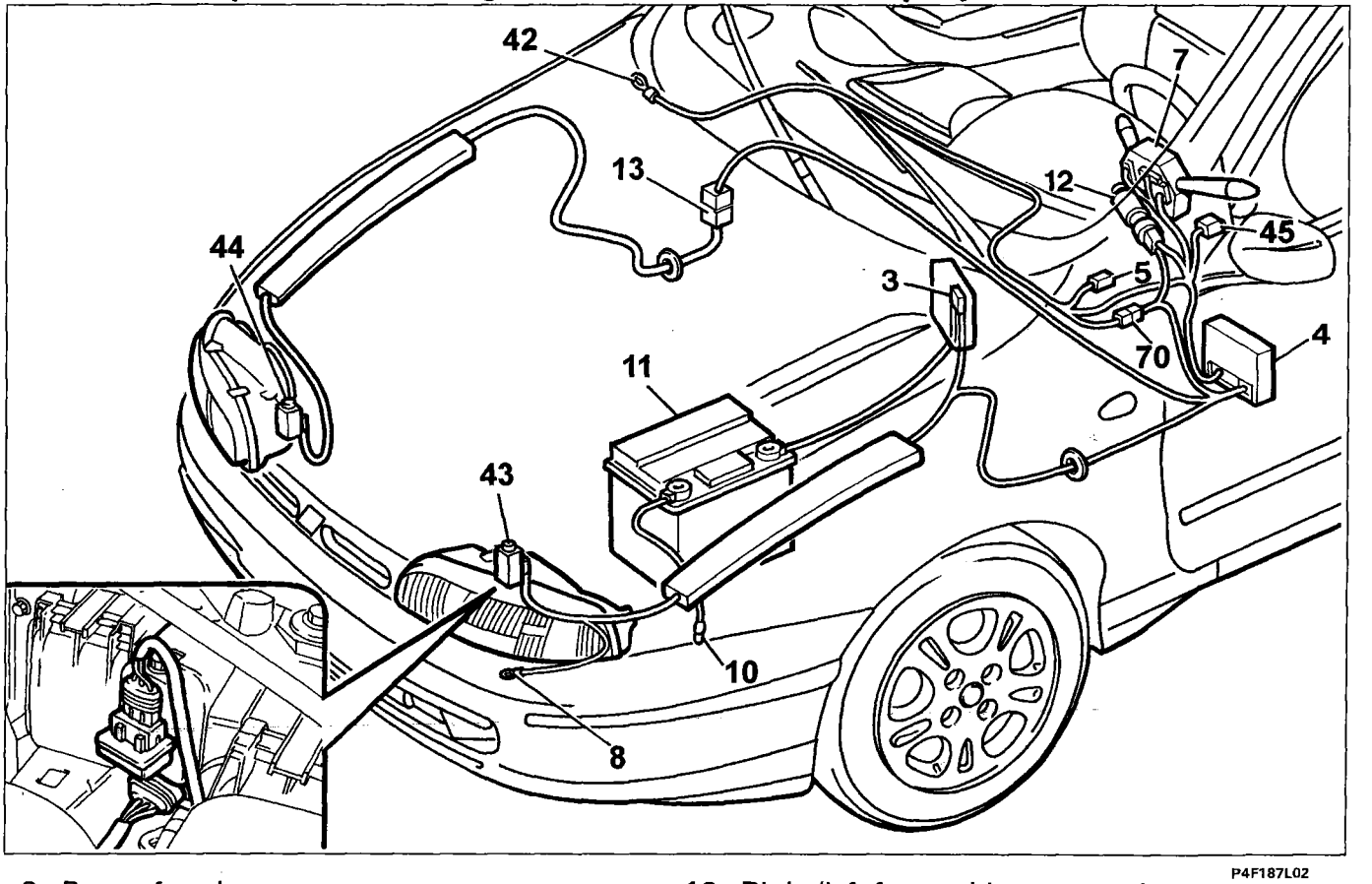

3. Power fuse box
4. Junction unit
5. Dipped beam relay
7. Stalk unit
8. Left front earth
10. Battery earth on body shell
11. Battery
12. Ignition switch
13. Right/left front wiring connection
42. Right hand facia earth
43. Electric actuator for correcting left headlamp alignment
44. Electric actuator for correcting right headlamp alignment
45. Headlamp alignment device control assemblly
70. Facia/front wiring connection

Operation

Headlamp alignment is adjusted electrically. Alignment can be carried out when the ignition key is turned to MAR and the headlamps are dipped. The headlamps are moved by two motor actuators (43-44) fitted directly to the light units. Control unit (45) consists of a resistance divider and a potentiometer. A potentiometer knob on the facia may be adjusted to four different positions corresponding to four headlamp settings. The wiring diagram shows connections for the various system devices.

The system is supplied by a 12V source from the ignition switch and is protected by fuse (F5) located on junction unit (4). The actuator consists of a motor to which is fitted a potentiometric position transducer and an electronic control unit.

Wiring diagram showing headlamp alignment device connections

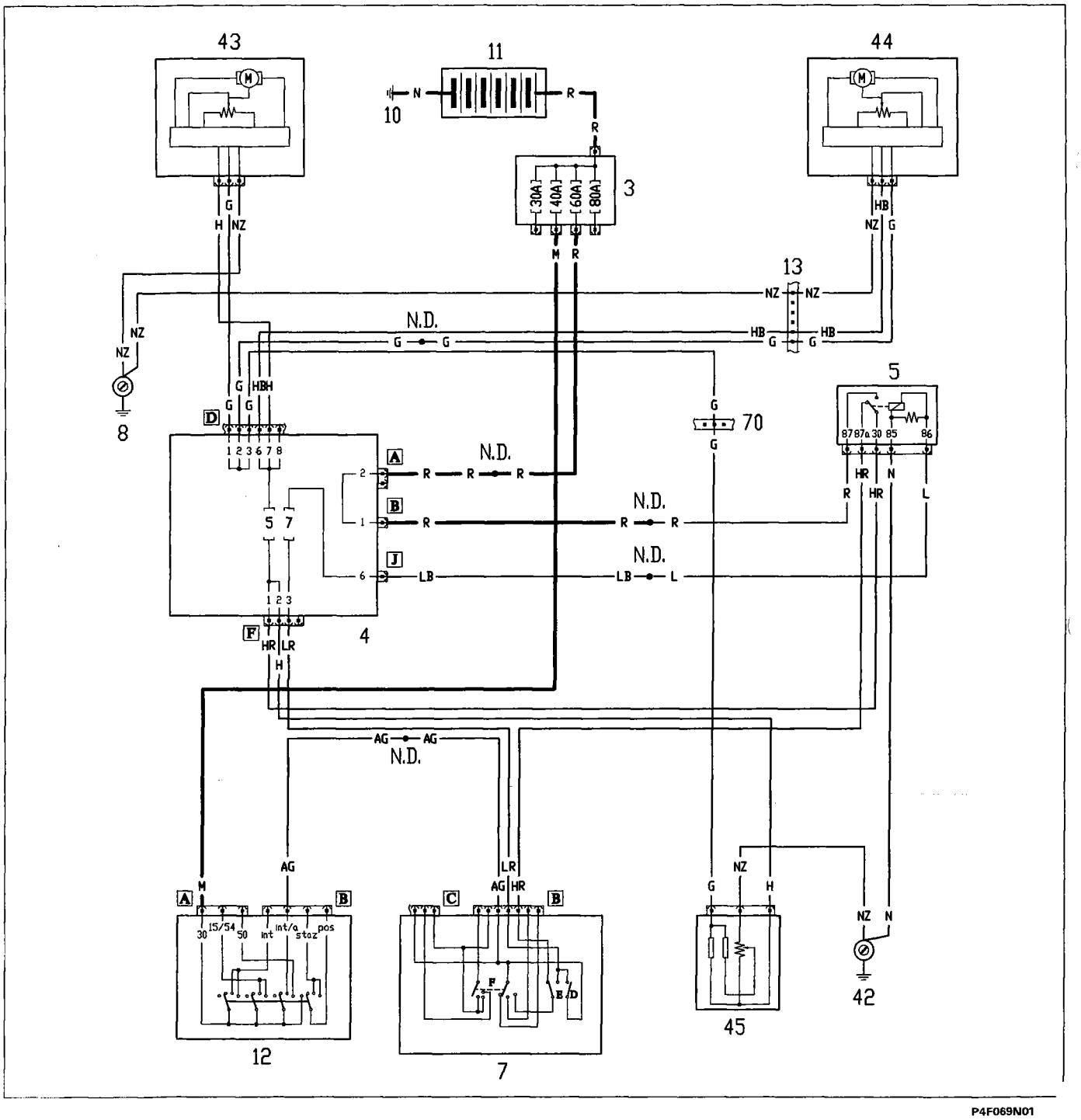

page

TAXI VERSION

- Location of supplementary electrical components on vehicle 1
- Predisposition for connecting lighted TAXI sign 2
- Predisposition for connecting taxi meter 2
- Predisposition for connecting taxi radio 3
- Power point in luggage compartment and associated electrical components 4
- Engine bay fuses 5
- Wiring diagram 6

Copyright Fiat Auto

COPYRIGHT Fiat Auto S.p.A.

Total or partial reproduction of the text or illustrations is forbidden.

The information in this publication is intended as a guide and could be superseded as a result of modifications adopted by the Manufacturer at any time due to technical and commercial reasons and in accordance with local regulations.

Fiat Auto S.p.A.

D.M.C. - M.P.S.
Servizi Post Vendita - Assistenza Tecnica
10040 Volvera - TO - (Italia) - Largo Senatore G. Agnelli, 5
Print no. 506.763/03 – Febbraio 1997 - 750
Printed in Italy - Tip. Bogliani - Torino
n° ordinazione *604.44.788*

TAXI versions of the Marea and Marea Weekend are available with two engines: 1581 16v (manual gearbox or automatic transmission) or 1910 turbodiesel equipped with a manual gearbox.
This outfit is specific to both Saloon and Weekend versions. It includes certain equipment which may be used to convert the vehicles easily into TAXIs:

- Wiring for connection of taxi meter, taxi radio and a roof-mounted TAXI sign
- Power point in the luggage compartment (to supply vacuum cleaner, minibar etc.)
- Upgraded 60 Ah battery (originally 50 Ah) for 1581 16v version
- Upgraded 70 Ah battery (originally 60 Ah) for 1910 TD version

LOCATION OF SUPPLEMENTARY ELECTRICAL COMPONENTS ON VEHICLE

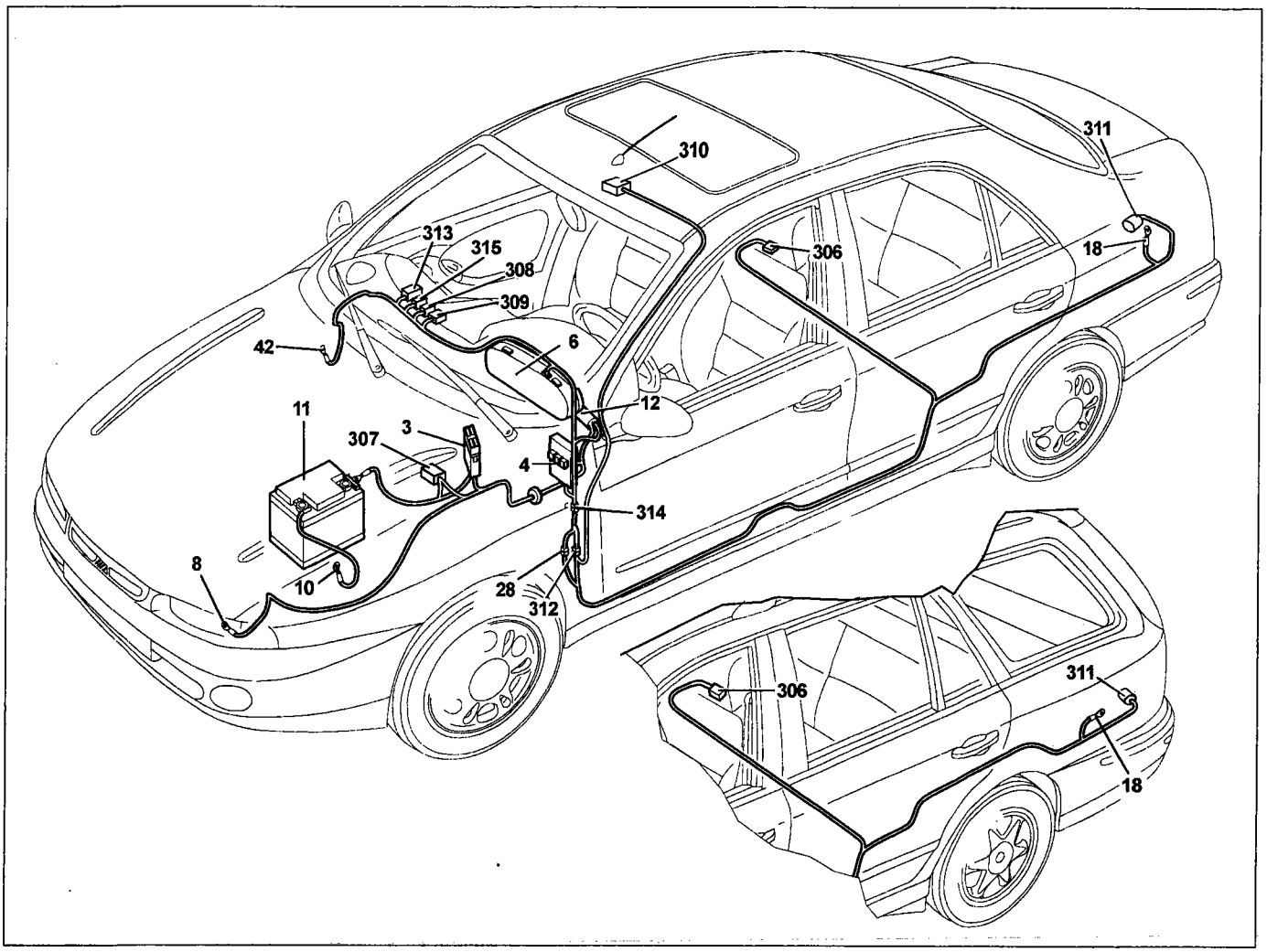

P4F01BL01

Key

3. Power fuse box
4. Junction unit
6. Instrument panel
8. Left front earth
10. Battery earth
11. Battery
12. Ignition switch
18. Left rear earth
28. Connection between facia wiring and rear wiring
42. Right hand facia earth
306. Connection for taxi radio predisposition
307. 7.5A taxi radio fuse
308. 7.5A taxi meter fuse
309. Predisposition for taxi meter
310. Predisposition for lighted TAXI sign
311. Power point in luggage compartment
312. Joint between rear and facia leads
313. Relay for power point in luggage compartment
314. Joint between facia and front leads
315. 30A fuse for luggage compartment power point

Copyright Fiat Auto

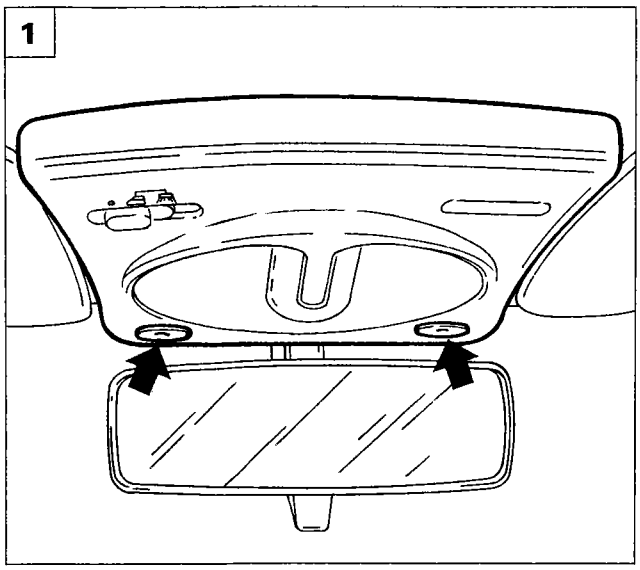

P4F02BL01

PREDISPOSITION FOR CONNECTION OF LIGHTED TAXI SIGN"

Removing-refitting upper interior courtesy light

1. Remove the panels indicated by arrows (press-fitted).
2. Unscrew the screws securing the courtesy light to the body.
3. Disconnect electrical connections and remove courtesy light from body to gain access to the predisposition indicated.

Reverse removal instructions to refit the courtesy light.

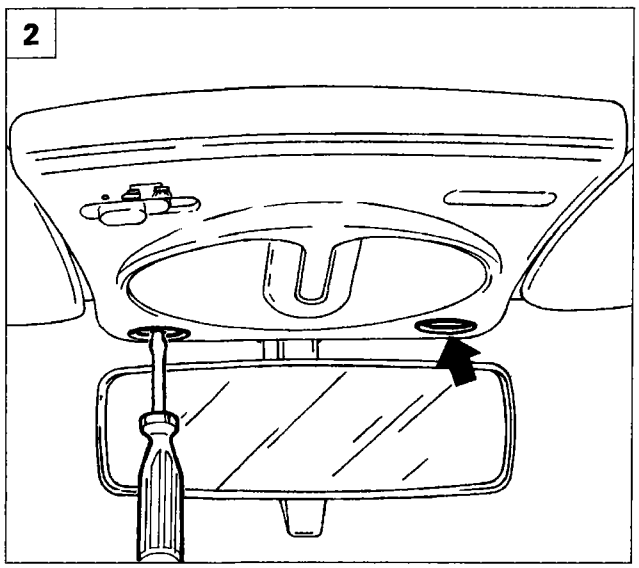

P4F02BL02

PREDISPOSITION FOR CONNECTING TAXI METER

Removing-refitting glove compartment

4. Open the glove compartment, turn the fastening knobs and remove the inner compartment protection.

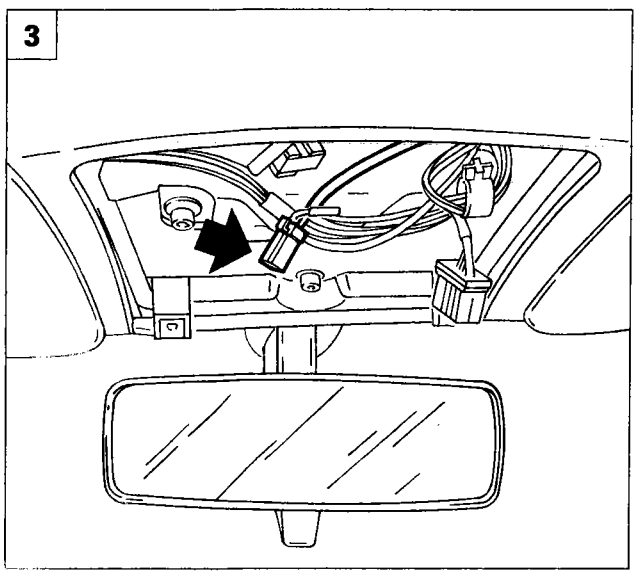

P4F02BL03

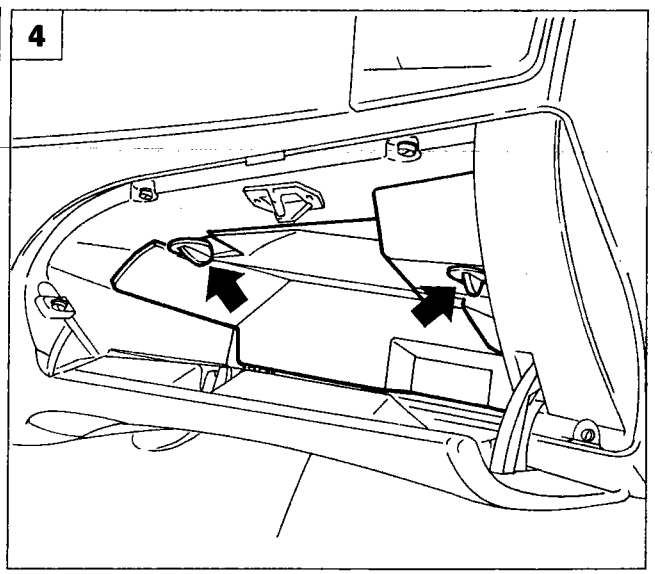

P4F02BL04

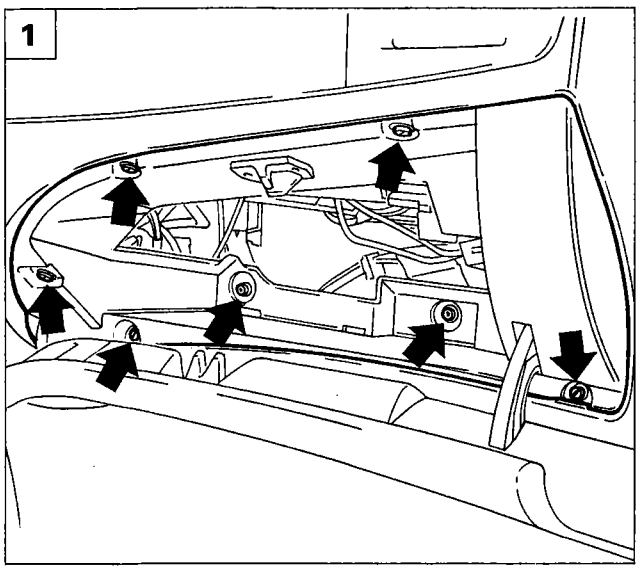

P4F03BL01

1. Unscrew the seven retaining screws indicated.
2. Remove the lining to gain access to the following predispositions:

   a. taxi meter connection joint

   b. 7.5A taxi meter fuse

Reverse removal instructions to refit the glove compartment.

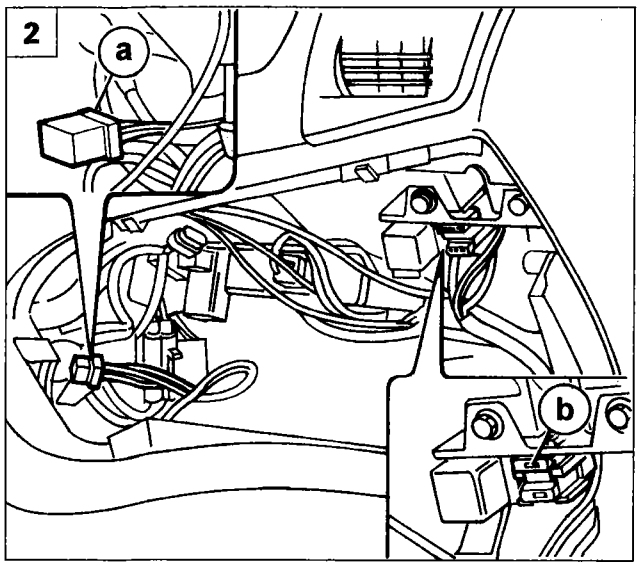

P4F03BL02

PREDISPOSITION FOR CONNECTING TAXI RADIO

3-4. Fully raise the rear seat cushion to gain access to the taxi radio predisposition.

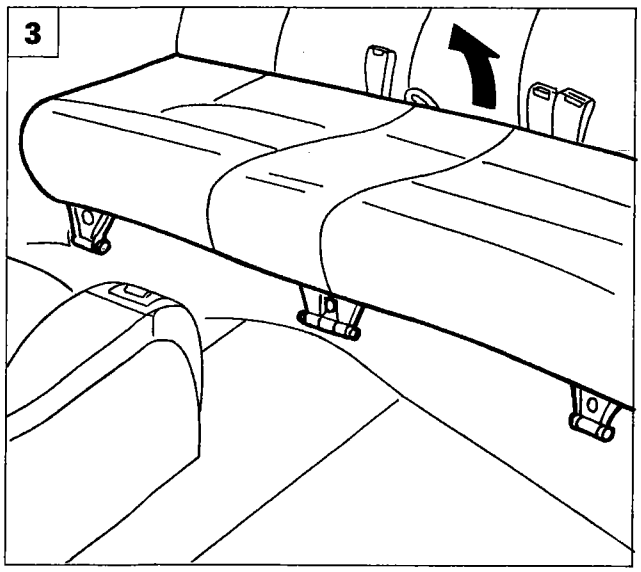

P4F03BL03

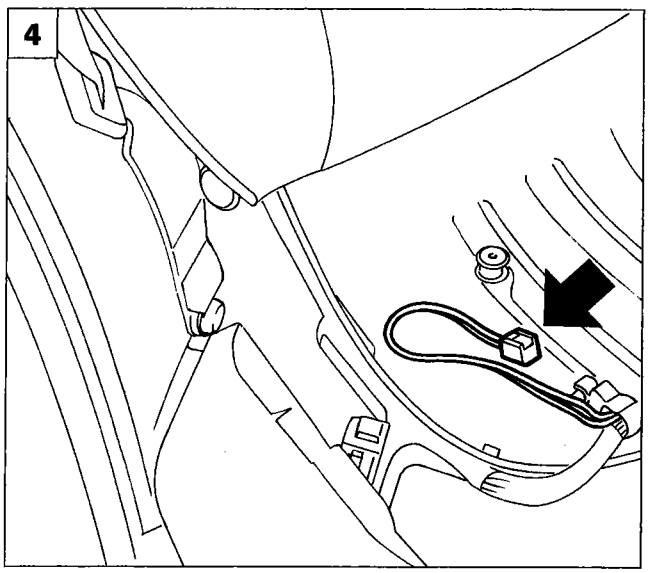

P4F03BL04

Copyright Fiat Auto

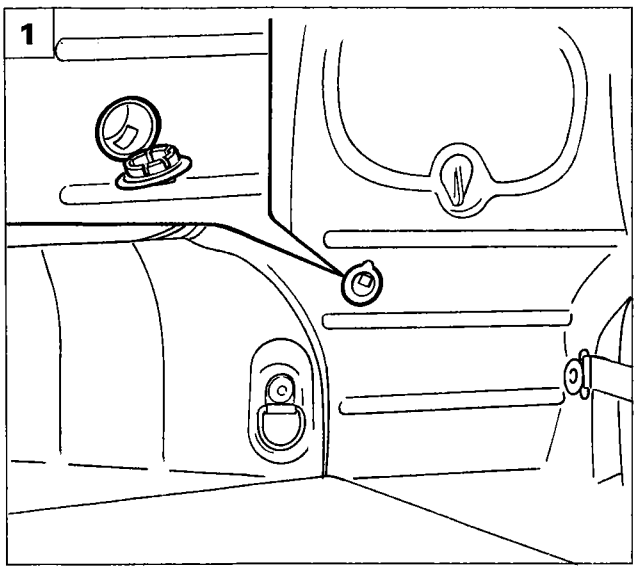

P4F04BL01

POWER POINT IN LUGGAGE COMPARTMENT AND ASSOCIATED SUPPLY COMPONENTS

Removing-refitting

Saloon version

1. To remove the power point located alongside the left tail-light cluster, refer to Section 55 Removing-refitting cigar lighter socket.

Weekend version

2. Turn the fasteners shown and remove the lining.
3. To remove the power point, refer to Section 55 Removing-refitting cigar lighter socket.

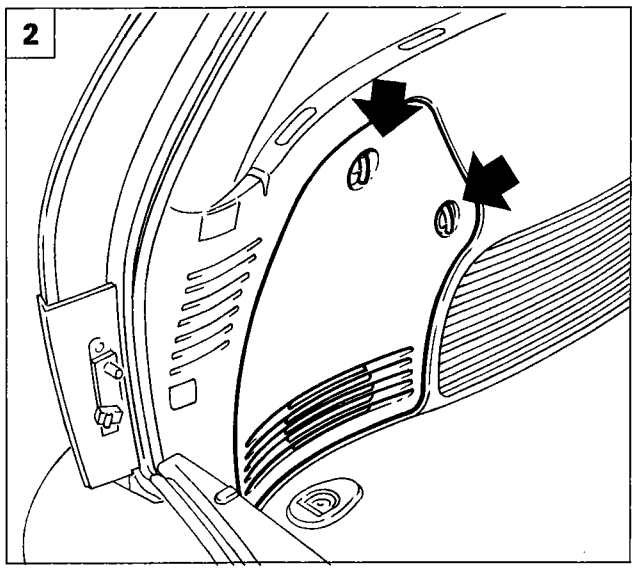

P4F04BL02

All versions

4. Remove the glove compartment lining as described on the two previous pages, in order to gain access to the following predispositions:
   a. luggage compartment power point supply relay
   b. 30A luggage compartment power point fuse

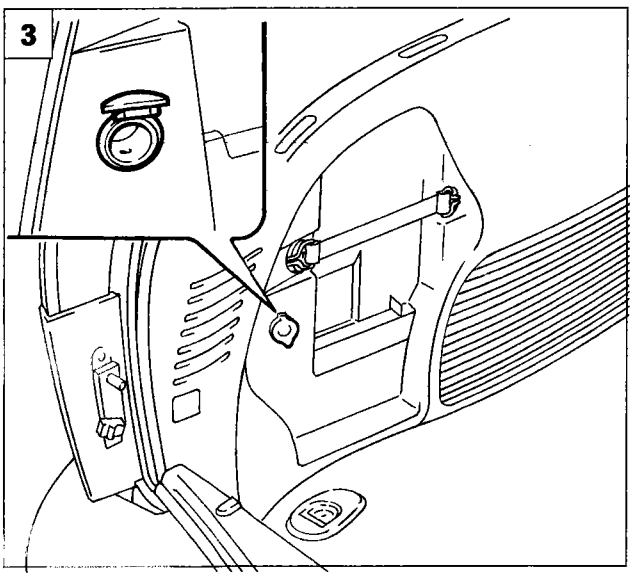

P4F04BL03

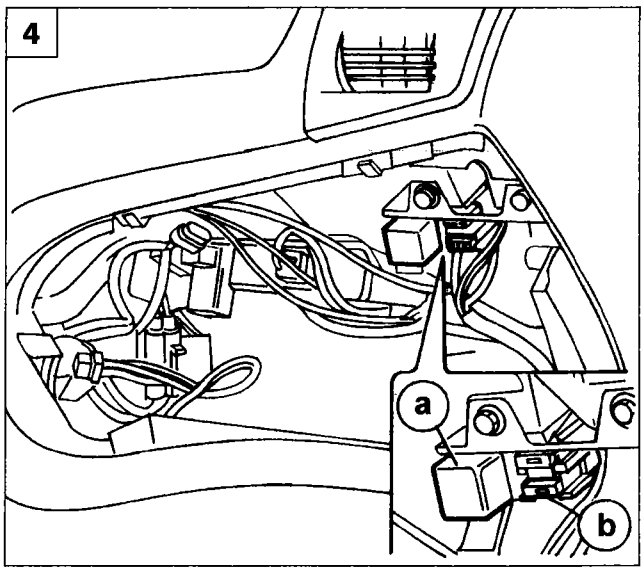

P4F04BL04

ENGINE BAY FUSES

The following fuses are housed on the left rear side of the engine bay and protected by a cover:

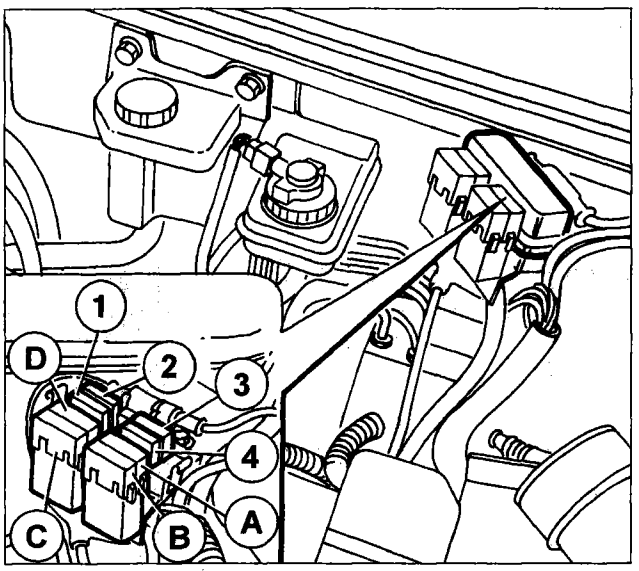

P4F05BL01

In the MAXI fuse box:

1. (EFI) electronic injection fuse (petrol)
   (GLOW) glow plug fuse (diesel)
2. (J/B2) general supply fuse
3. (J/B1) general supply fuse
4. (IGN) ignition switch fuse

next to the box:

A. 40A second fan speed fuse 40A (only diesel engines with air conditioning)

B. 7.5A fuse for taxi radio predisposition

C. 60A fuse for ABS

D. engine cooling fan fuse (see table)

FUSE D

30A	1581 16V version without air conditioner
40A	versions (all) with air conditioning
50A	1910 TD version without air conditioner

Key to wiring diagram on next page

3. Power fuse box
4. Junction unit
6. Instrument panel
8. Left front earth
10. Battery earth
11. Battery
12. Ignition switch
18. Left rear earth
28. Connection between facia wiring and rear wiring
42. Right hand facia earth
306. Taxi radio predisposition connection
307. 7.5A taxi radio fuse
308. 7.5A taxi meter fuse
309. Predisposition for taxi meter
310. Predisposition for lighted TAXI sign
311. Power point in luggge compartment
312. Joint between rear and facia leads
313. Relay for power point in luggage compartment
314. Joint between facia and front leads
315. 30A fuse for luggage compartment power point

Copyright Fiat Auto

55

Wiring diagram

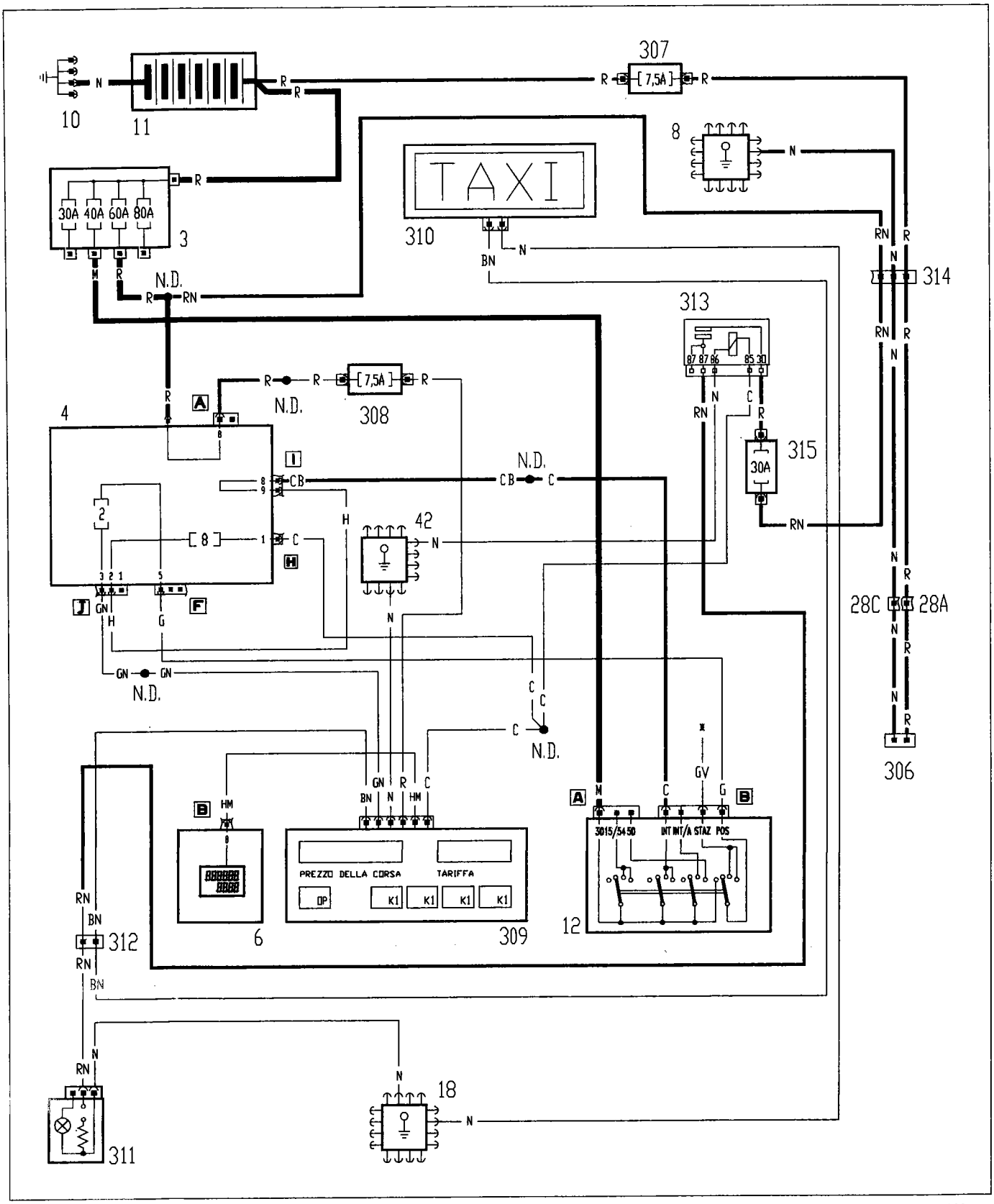

To stalk unit

page

- Electrical symbols 1
- Explanation to the wiring diagrams 4
- Wiring diagrams 5
- Key 141

Copyright Fiat Auto

NAME	Marea - Marea Weekend											
	SX				ELX					HLX		
	1370	1581	1910 TD-75	1910 TD-100	1581	1581 c.a.	1747	1910 TD-100	2387 TD	1747	1998	2387 TD
Versions with Check Panel Side lights and warning lamp - Dipped beam headlamps - Main beam headlamps and warning light - Number plate lights	-	-	-	-	5	5	5	5	5	5	5	5
Versions without Check Panel Side lights and warning lamp - Dipped beam headlamps - Main beam headlamps and warning light - Number plate lights	7	7	7	7	-	-	-	-	-	-	-	-
Front fog lamps - Rear fog lamps	9	9	9	9	9	9	9	9	9	9	9	9
Versions with Check Panel Direction indicators and warning lamp - Hazard warning lights - Stop lights - Reversing lights	-	-	-	-	11	11	11	11	11	11	11	11
Versions without Check Panel Direction indicators and warning lamp - Hazard warning lights - Stop lights - Reversing lights	13	13	13	13	-	-	-	-	-	-	-	-
Fiat Marea Courtesy light- Symbol illumination	15	15	15	15	15	15	15	15	15	15	15	15
Fiat Marea Weekend Courtesy light- Symbol illumination	17	17	17	17	17	17	17	17	17	17	17	17
Radio system (high level: AD 185 H) - Cigarette lighter	19	19	19	19	19	19	19	19	19	19	19	19
Radio system (medium level: AD 185 M) - Cigarette lighter	21	21	21	21	21	21	21	21	21	-	-	-
Electric front windows	23	23	23	23	23	23	23	23	23	23	23	23
Electric rear windows	-	-	-	-	-	-	-	-	-	25	25	25
Fiat CODE system and warning light	27	27	80/1	80/1	27	27	27	80/1	80/1	27	27	80/1
Alarm system	29	29	29	29	29	29	29	29	29	29	29	29
Central door locking system	31	31	31	31	31	31	31	31	31	31	31	31
Electrically-adjustable and heated external rearview mirrors	-	-	-	-	33	33	33	33	33	33	33	33

(cont.)

NOTE *The numbers in the table correspond to the page number of the relevant wiring diagram*

4F196N

Copyright Fiat Auto

NAME	Marea - Marea Weekend											
	SX				ELX					HLX		
	1370	1581	1910 TD-75	1910 TD-100	1581	1581 c.a.	1747	1910 TD-100	2387 TD	1747	1998	2387 TD
Electric sunroof	35	35	35	35	35	35	35	35	35	35	35	35
Headlamp adjuster	37	37	37	37	37	37	37	37	37	37	37	37
Heated front seats (NORTHERN EUROPE markets only)	-	39	-	-	39	-	39	-	-	-	-	-
Air Bag and pretensioners and fault warning light	41	41	41	41	41	41	41	41	41	41	41	41
Windscreen wash/wipe - Rear window wash/wipe - Electric horns - Heated rear window - Headlamp washer	43	43	43	43	43	43	43	43	43	43	43	43
Fuel level gauge and reserve warning light - Handbrake on and low brake fluid warning light - Speedometer - Total mileage counter/trip recorder and reset button - Coolant temperature gauge - Low oil pressure warning light - Front brake pad wear warning light - Seat belt warning light	45	45	45	45	45	45	45	45	45	45	45	45
Instrument panel connections	47	47	80/3	80/3	47	47	47	80/3	80/3	47	47	80/3
Check Panel connections	-	-	-	-	49	49	49	49	49	49	49	49
Air conditioner / thermostatically-controlled heater	51	51	80/5	80/7	51	51	53	80/7	80/9	53	55	80/9
Versions with air conditioner Engine cooling - Engine coolant temperature gauge	57	57	80/11	80/11	57	57	59	80/11	80/13	59	61	80/13
Versions without air conditioner Engine cooling - Engine coolant temperature gauge - Manual heater: car interior ventilation	63	63	80/15	80/17	63	63	65	80/17	80/19	65	63	80/19
Anti-lock braking system (A.B.S.) and fault warning light	67	67	67	67	67	67	67	67	67	67	67	67
Starting - Electronic ignition and fuel injection - Recharging and warning light - Low engine oil pressure warning light - Fuel injection fault warning light - Rev counter	69	71	-	-	71	71	73	-	-	73	75	-
Starting - Electronic fuel injection - Recharging and warning light - Low engine oil pressure warning light - Heater plugs warning light - Fuel injection fault warning light - Fuel preheating	-	-	-	80/21	-	-	-	80/21	80/23	-	-	80/23
Starting - E.G.R. control - Fuel injection control - Plug preheating and warning light - Recharging and warning light - Low engine oil pressure warning light	-	-	80/25	-	-	-	-	-	-	-	-	-
Automatic transmission - System fault warning light	-	-	-	-	-	77	-	-	-	-	-	-
Diagnostic sockets connections	79	79	80/27	80/27	79	79	79	80/27	80/27	79	79	80/27
Starting - Electronic ignition and fuel injection - Recharging and warning light - Low engine oil pressure warning light - Fuel injection fault warnirg light - Rev counter	70/1	-	-	-	-	-	-	-	-	-	-	-

NOTE *The numbers in the table correspond to the page number of the relevant wiring diagram.*

4F196N

Electrical symbols

Side lights	Choke	Ig.switch discharge
Main beam headlamps	Water in fuel filter	Dipped headlamps
Heated seat	Plug preheating	Direction indicators with central door locking
Seat belts	Turbocompressor pressure	Electric horns
Heated rear window	Rear fog lamps	Left indicator
Handbrake on and low brake fluid level	Front fog lamps	Right indicator
A.B.S.	Brake pad wear	Engine cooling system
Hazard	Turbocompressor pressure	Windscreen wiper
Indicators	Auto transmission fluid temperature	Electric sunroof
Handbrake on and low brake fluid level	Speed limits	Catalytic converter temperature
Recharging	Fuel gauge	Resistor
Engine oil pressure	Coolant temperature	Diode

P4F001N01

Copyright Fiat Auto

Electrical symbols

	Warning light		Trip computer control		Differential lock
	Bulb		Electronic injection		Auto transmission fluid temperature
	Fuse		Engine oil level	00°	Temperature
	Switch open	BRAKE	Brake fluid level (Japanese version)		Anti-theft device
	Selector switch		Doors open		Electric windows
	Button open		Central door locking		Earth
	Coil-operated switch (relay)	SPORT	Sport function on electronic suspension system		No. plate lights
M	Motor		Transistor		Pulse generator (Timer)
	Rear window wiper		Air Bag		Analogue clock
	Headlamp washer	ANTI LOCK	A.B.S. (Japanese version)	88:88	Digital clock
	W'screen wash/wipe	STOP	Car stop fault		Speedometer
	Rear wind.wash/wipe		Windscreen wiper		Rev counter

P4F002N01

Electrical symbols

Digital speedometer

Digital rev counter

Digital fuel gauge

Analogue fuel gauge

Analogue engine coolant gauge

Econometer

Digital engine coolant gauge

Engine oil temperature

Engine oil pressure gauge

Voltmeter

P4F003N01

4F003N

Copyright Fiat Auto

55.

Explanation to wiring diagrams

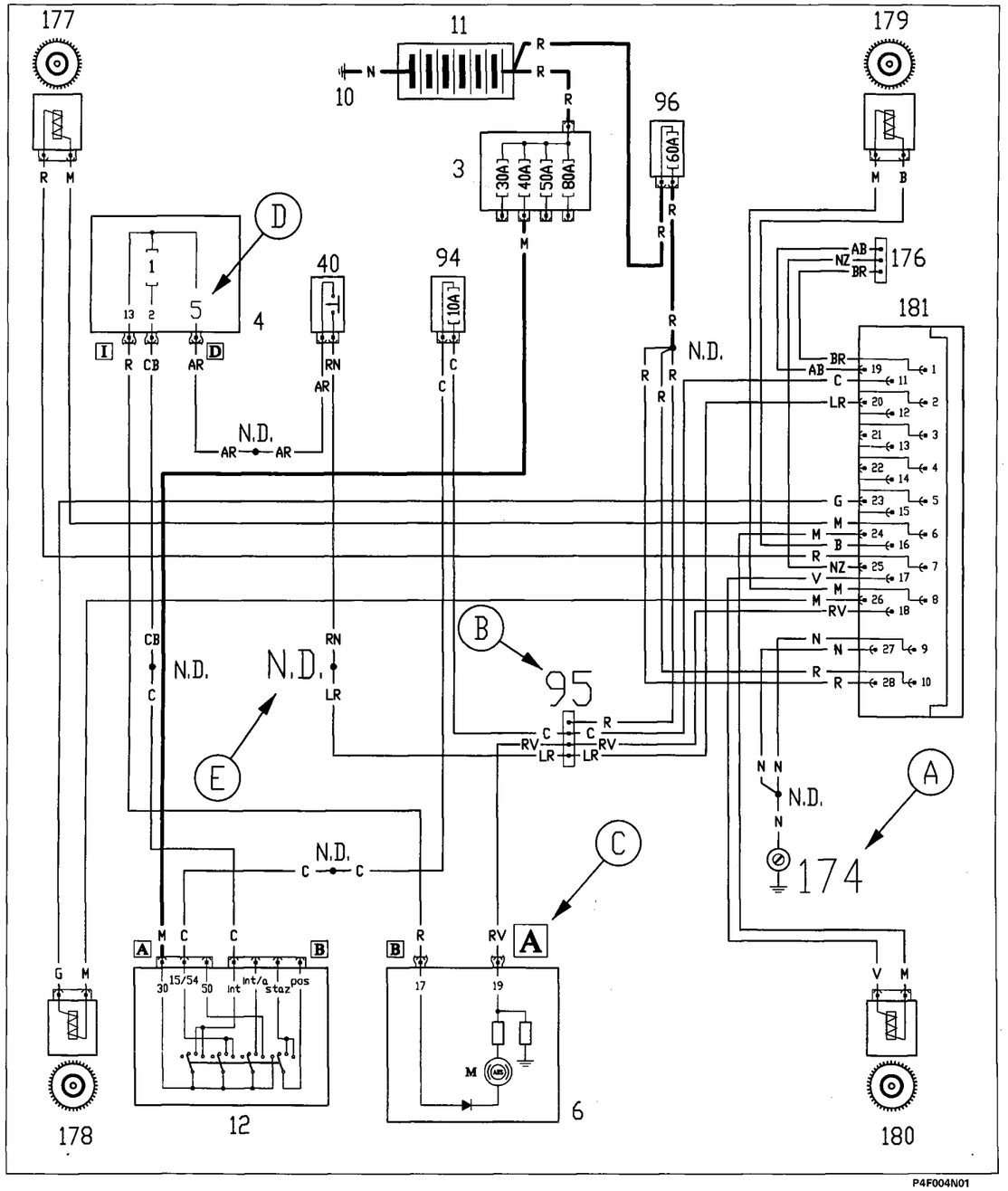

Key to references

A Component number
B Connection number
C Identification of connector on component
D Number of connecting pin
E Ultrasound-soldered joint taped in wiring loom

4F004N

Versions with Check Panel
Side lights and warning lamp - Dipped beam headlamps - Main beam headlamps and warning light - Number plate lights

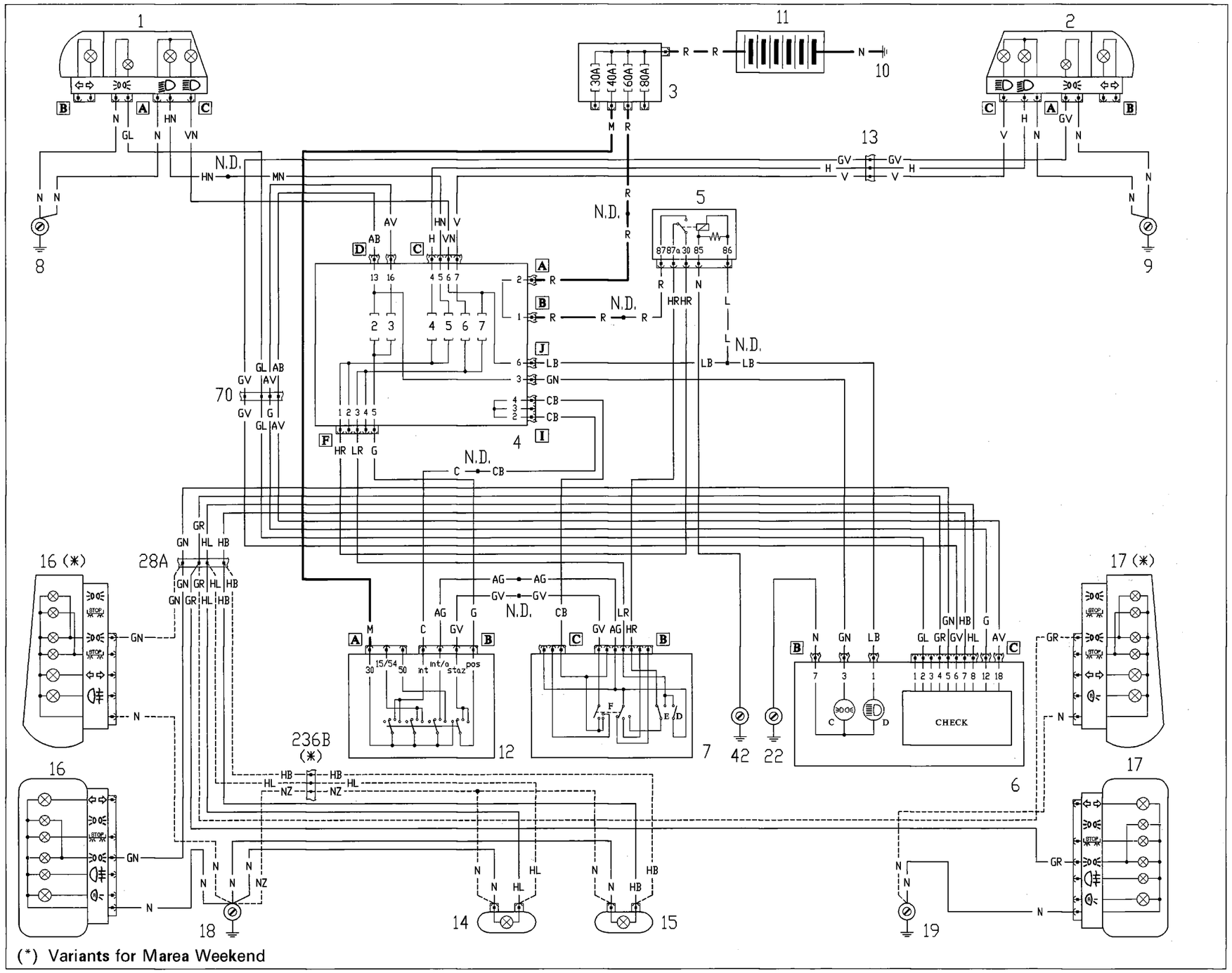

P4F005N01

4F005N

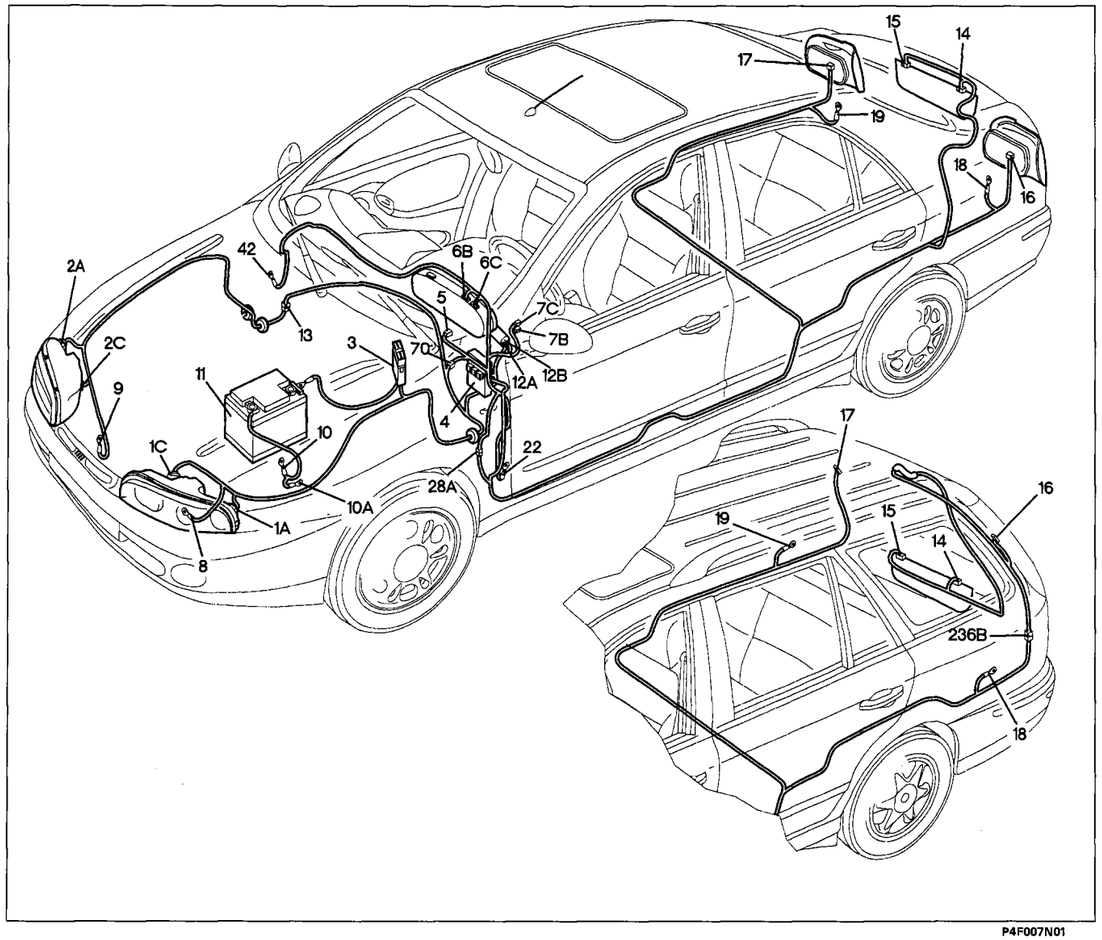

P4F007N01

Versions with Check Panel

Side lights and warning lamp - Dipped beam headlamps - Main beam headlamps and warning light - Number plate lights

Key to components

1 Front left lights cluster
2 Front right lights cluster
3 Power fusebox
4 Fuse and relay unit
5 Dipped beam relay
6 Instrument panel
7 Stalk unit
8 Front left earth
9 Front right earth
10 Battery earth on engine
10A Battery earth on body shell
11 Battery
12 Ignition switch
13 Right/left front cables connection
14 Left number plate light bulb
15 Right number plate light bulb
16 Rear left lights cluster
17 Rear right lights cluster
18 Rear left earth
19 Rear right earth
22 Left dashboard earth
28 Dashboard/rear cables connection
42 Right dashboard earth
70 Dashboard/front cables connection
236 Rear cable/tailgate connection

N.D. Ultrasound-soldered joint taped in wiring loom

4F006N

4C Fuse and relay unit

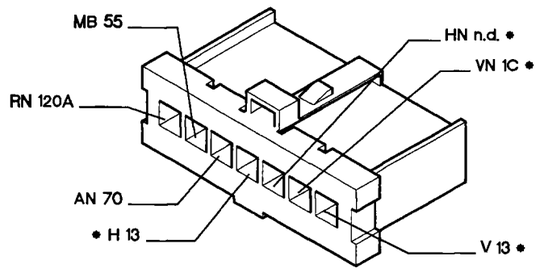

4D Fuse and relay unit

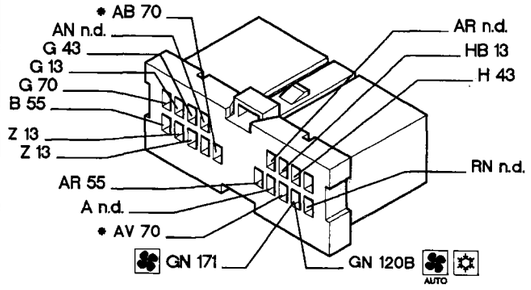

4F Fuse and relay unit

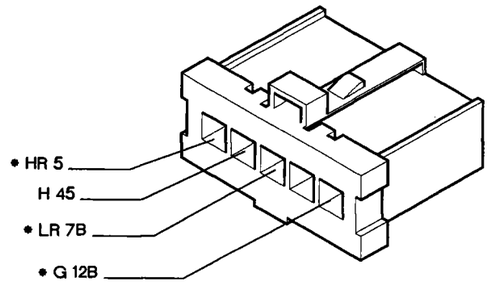

5 Dipped beam relay

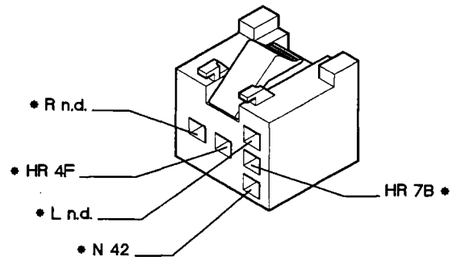

13 Right/left front cables connection

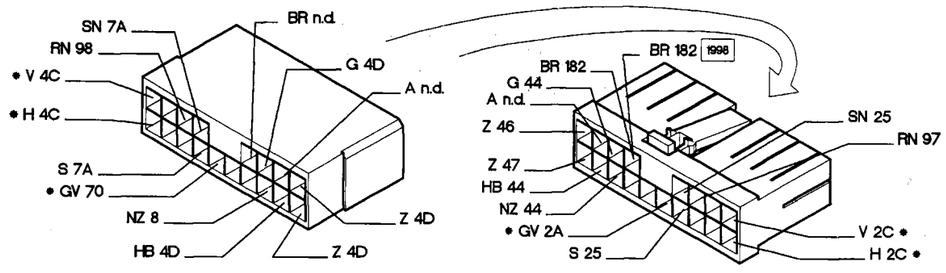

70 Dashboard/front cables connection

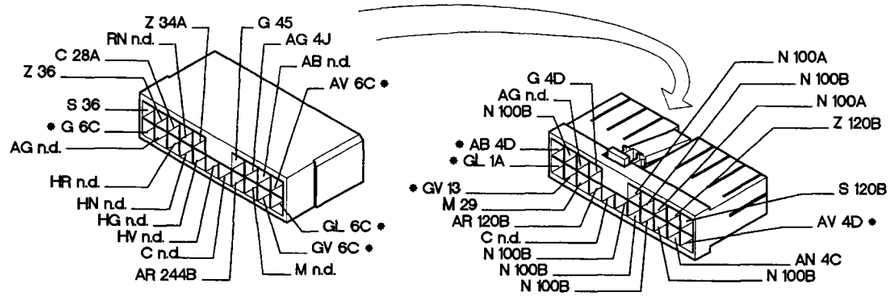

* The cables involved in the wiring diagram are marked by an asterisk.

P4F008N01

4F007N

Versions without Check Panel
Side lights and warning lamp - Dipped beam headlamps - Main beam headlamps and warning light - Number plate lights

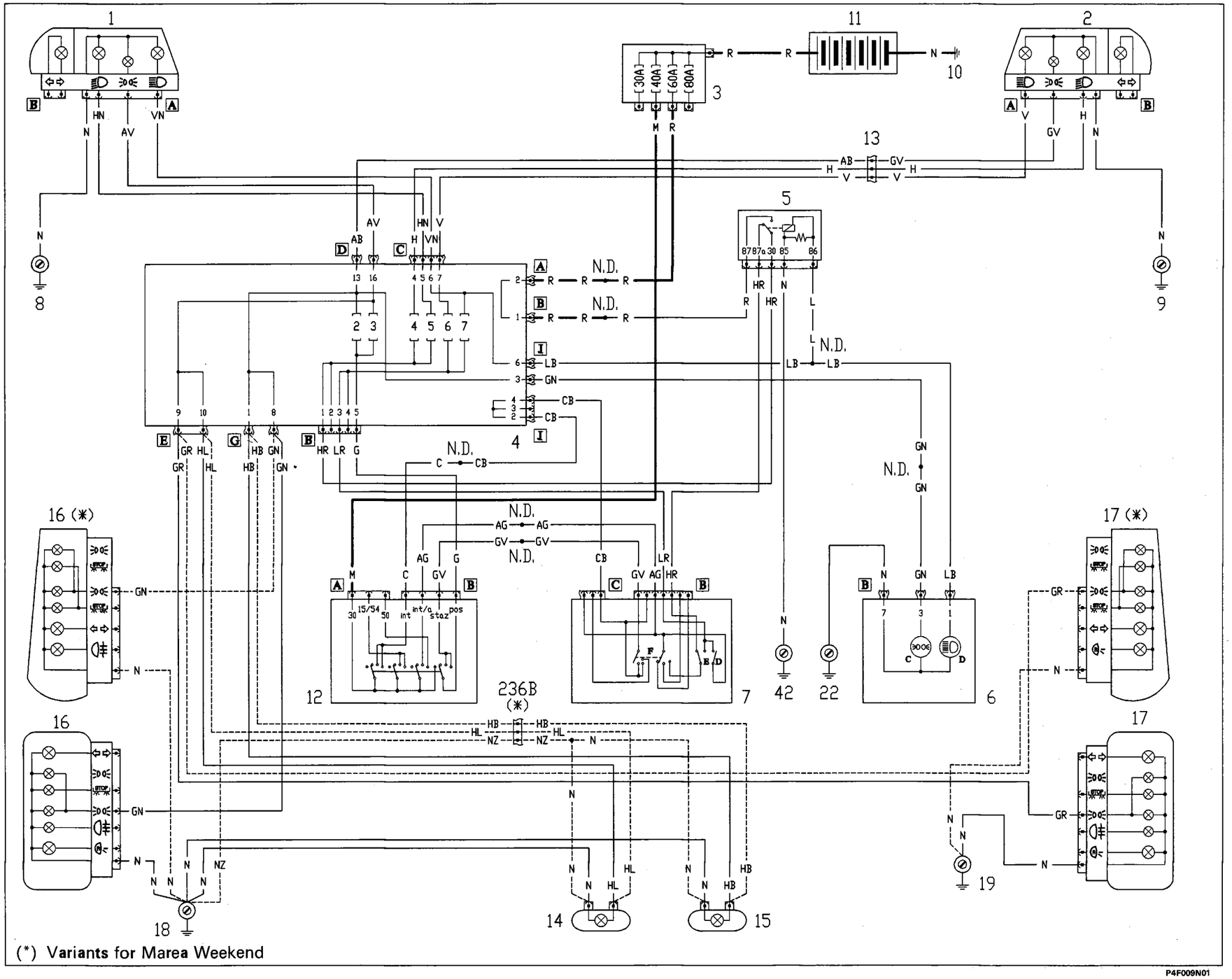

P4F009N01

4F006N

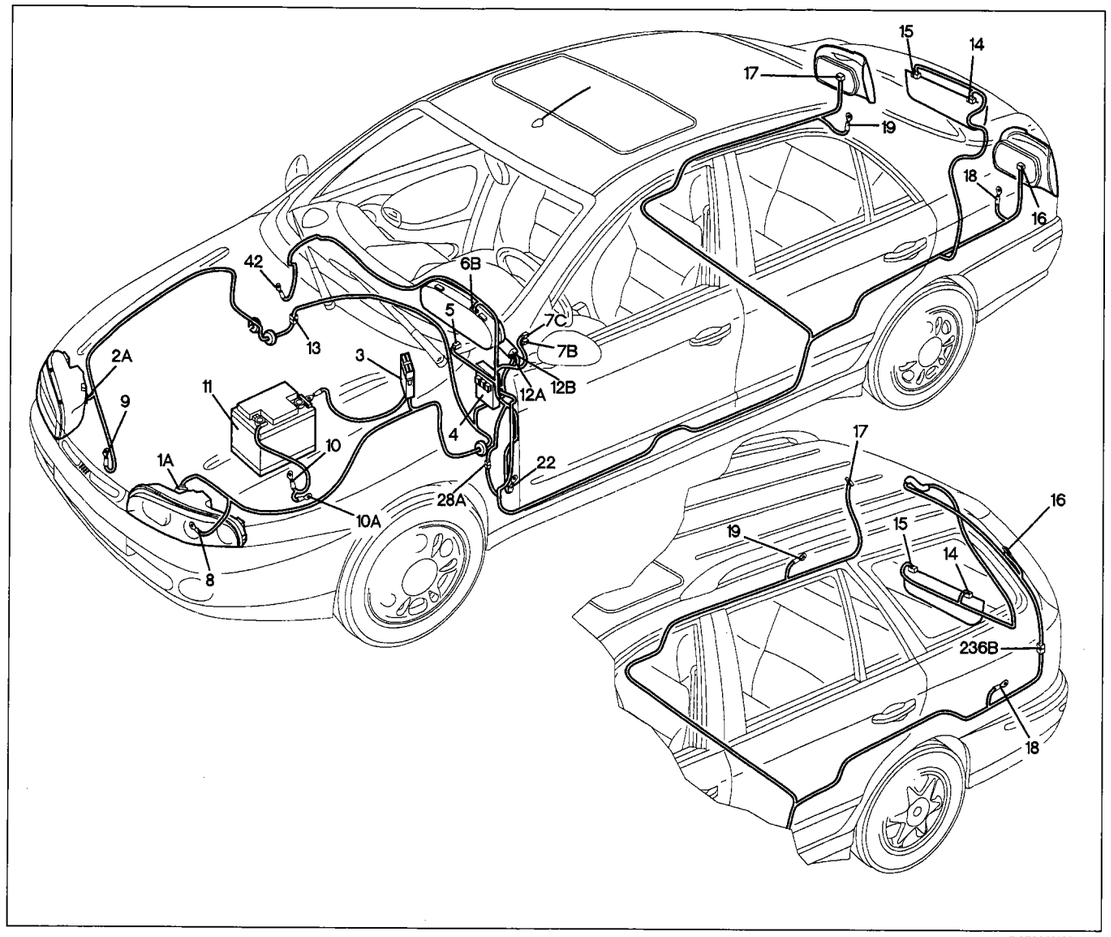

P4F011N01

Versions without Check Panel

Side lights and warning lamp - Main beam headlamps and warning light - Number plate lights

Key to components

1 Front left lights cluster
2 Front right lights cluster
3 Power fusebox
4 Fuse and relay unit
5 Dipped beam relay
6 Instrument panel
7 Stalk unit
8 Front left earth
9 Front right earth
10 Battery earth on engine
10A Battery earth on body shell
11 Battery
12 Ignition switch
13 Right/left front cables connection
14 Left number plate light bulb
15 Right number plate light bulb
16 Rear left lights cluster
17 Rear right lights cluster
18 Rear left earth
19 Rear right earth
22 Left dashboard earth
28 Dashboard/rear cables connection
42 Right dashboard earth
236 Rear cable/tailgate connection

N.D. Ultrasound-soldered joint taped in wiring loom

4F009N

4G Fuse and relay unit

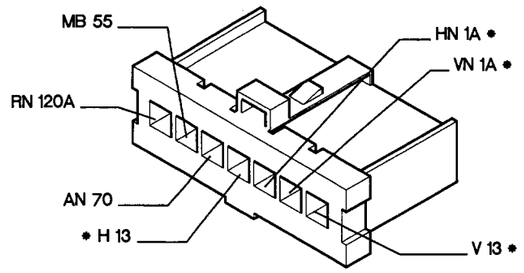

4D Fuse and relay unit

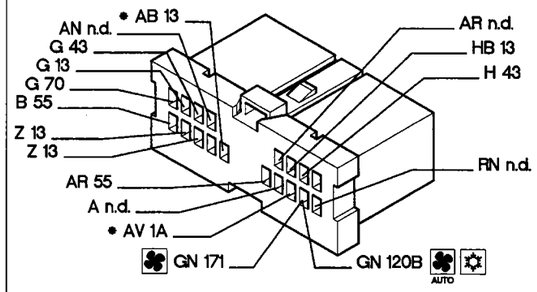

4F Fuse and relay unit

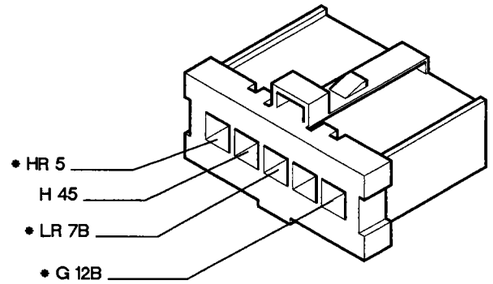

4G Fuse and relay unit

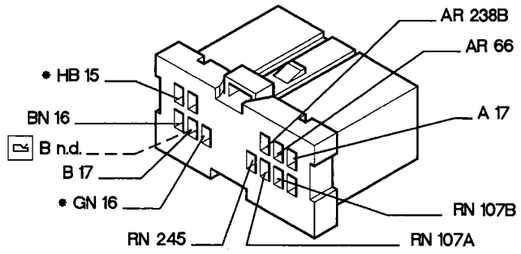

Marea

4G Fuse and relay unit

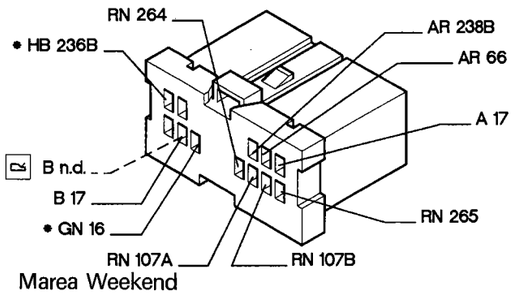

Marea Weekend

5 Fuse and relay unit

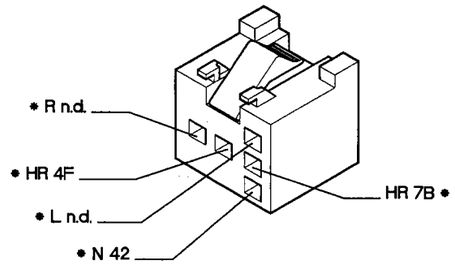

13 Right/left front cables connection

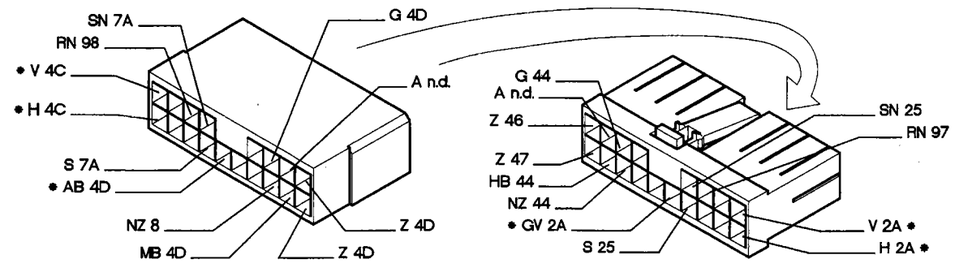

P4F012N01

* The cables involved in the wiring diagram are marked by an asterisk.

4F010N

Front fog lamps - Rear fog lamps

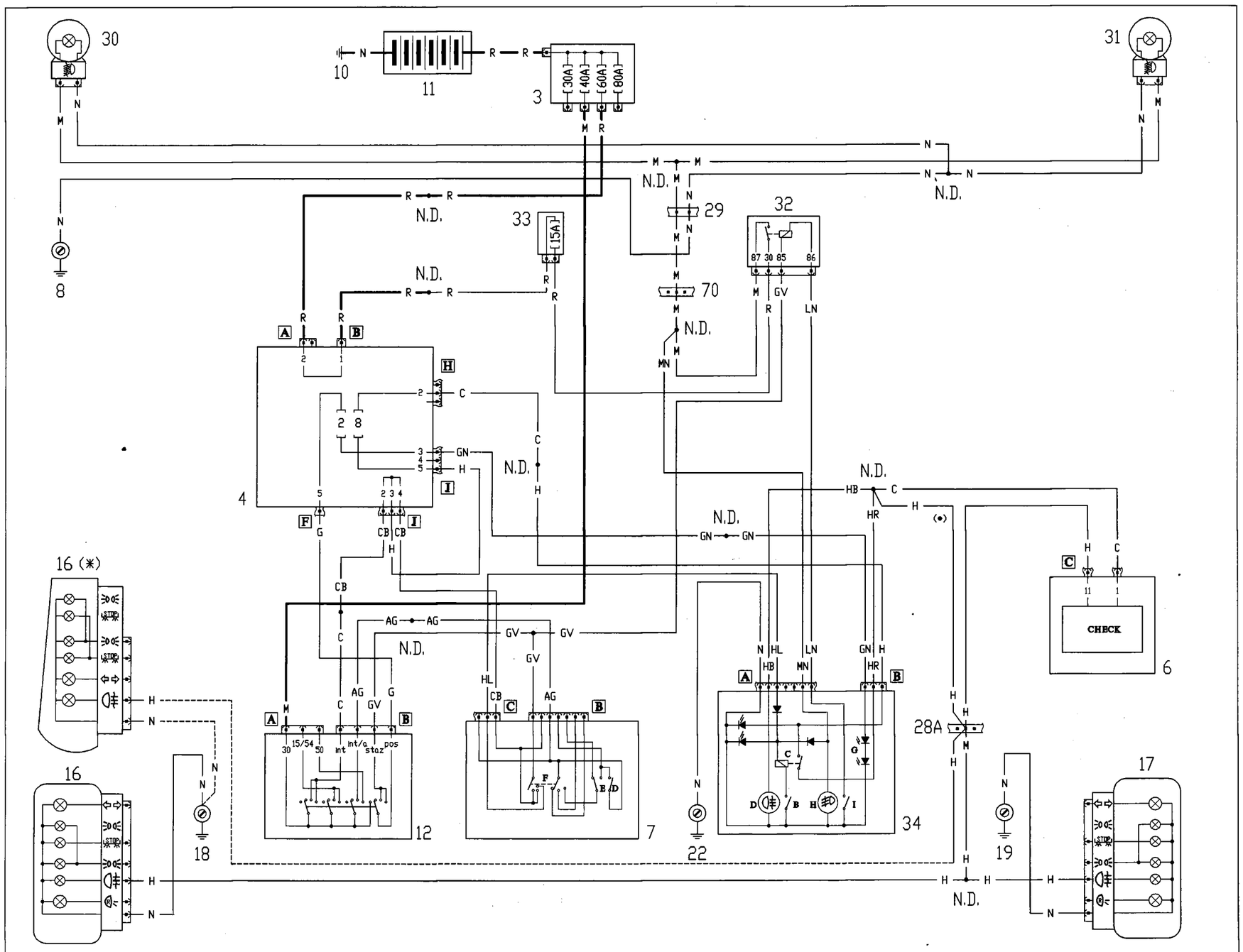

(*) Variants for Marea Weekend (●) Variant for versions without Check Panel

P4F013N01

4F011N

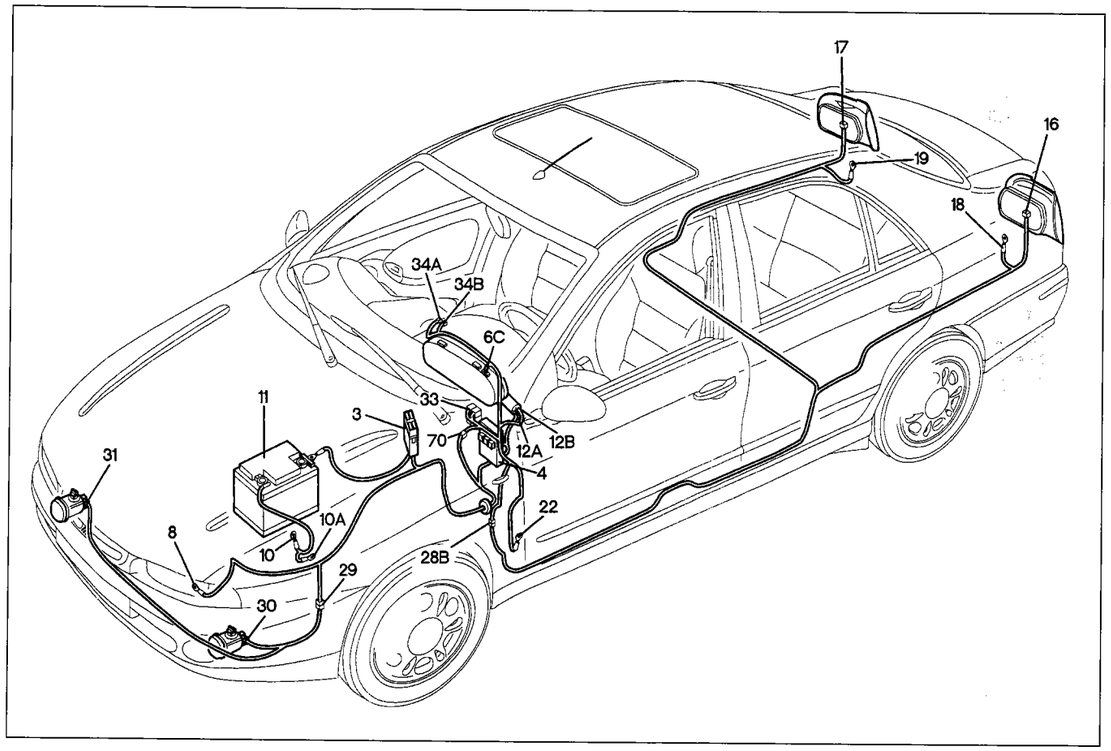

P4F016N01

Front fog lamps - Rear fog lamps

Key to components

3 Power fuse box
4 Fuse and relay unit
6 Instrument panel
8 Front left earth
10 Battery earth on engine
10A Battery earth on body shell
11 Battery
12 Ignition switch
16 Left tail-light cluster
17 Right tail-light cluster
18 Rear left earth
19 Rear right earth
22 Left dashboard earth
28 Dashboard/rear cables connection
29 Front/fog lamps cable connection
30 Front left fog lamp
31 Front right fog lamp
32 Front fog lamp relay
33 Front fog lamps fuse
34 Switch control unit
70 Dashboard/front cables connection
N.D. Ultrasound-soldered joint taped in wiring loom

4F012N

4J Fuse and relay unit

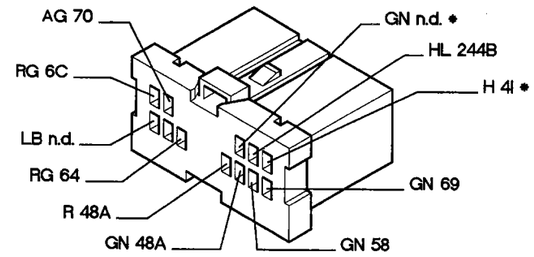

4H Fuse and relay unit

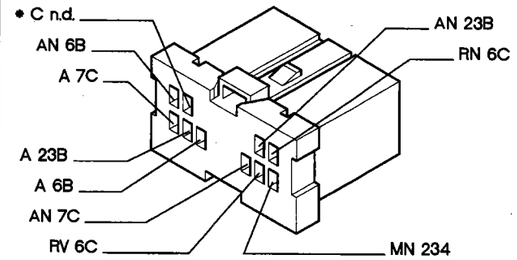

20 Front cables/front fog cables connection

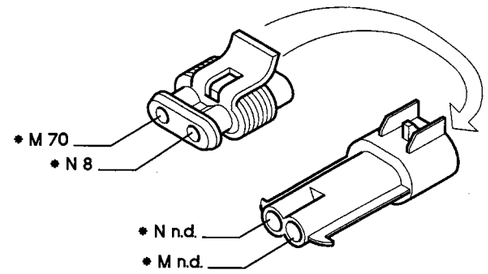

22 Front fog lamp relay

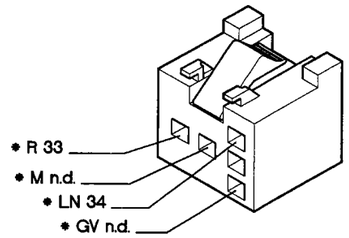

34A Switch control unit

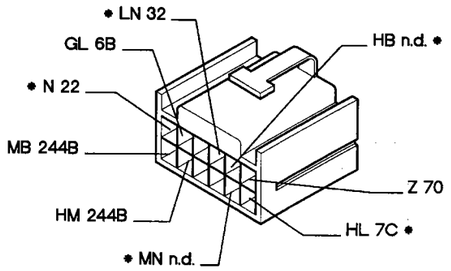

34B Switch control unit

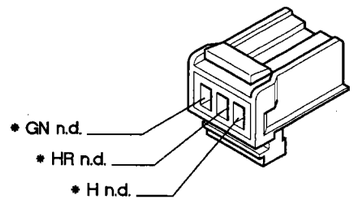

70 Dashboard/front cables connection

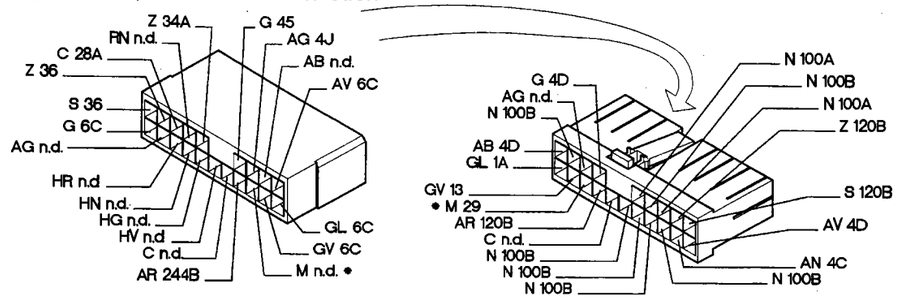

P4F016N01

* The cables involved in the wiring diagram are marked by an asterisk.

4F013N

Versions with Check Panel
Direction indicators and warning lamp - Hazard warning lights - Braking lights - Reversing lights

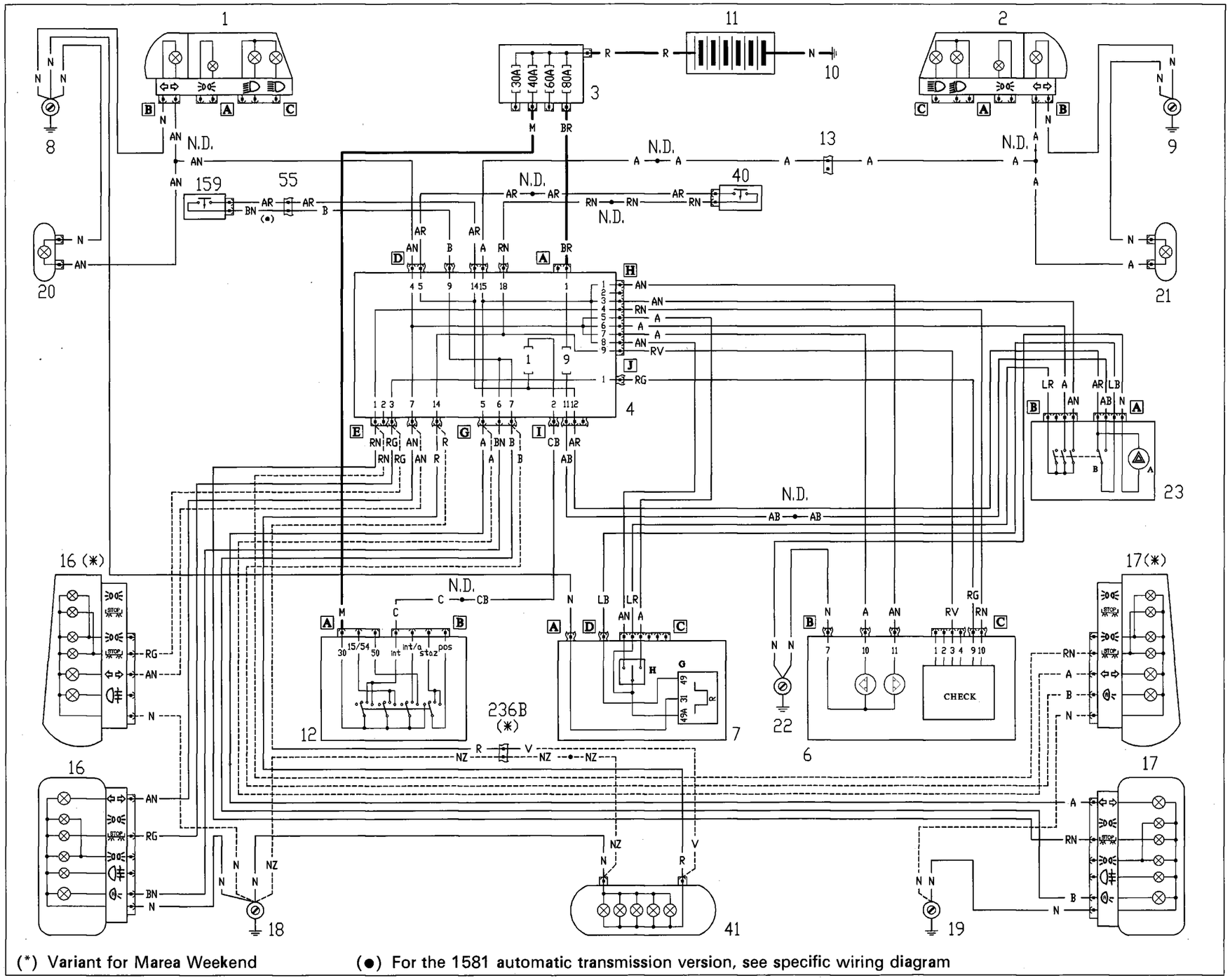

(*) Variant for Marea Weekend

(●) For the 1581 automatic transmission version, see specific wiring diagram

P4F017N01

4F014N

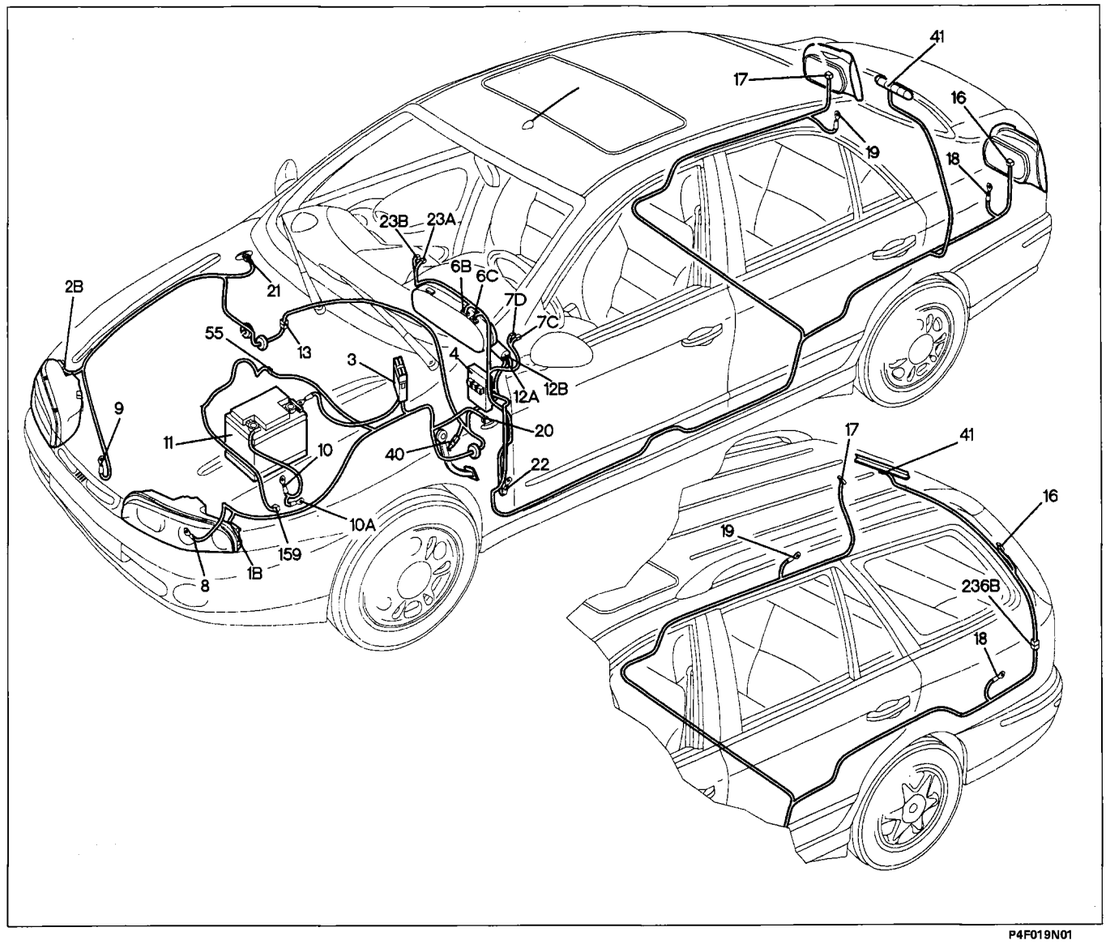

P4F019N01

Versions with Check Panel

Direction indicators and warning lamp - Hazard warning lights - Braking lights - Reversing lights

Key to components

1 Front left lights cluster
2 Front right lights cluster
3 Power fuse box
4 Fuse and relay unit
6 Instrument panel
7 Stalk unit
8 Front left earth
9 Front right earth
10 Battery earth on engine
10A Battery earth on body shell
11 Battery
12 Ignition switch
13 Right/left front cables connection
16 Rear left lights cluster
17 Rear right lights cluster
18 Rear left earth
19 Rear right earth
20 Front left side repeater
21 Front right side repeater
22 Left dashboard earth
23 Hazard lights switch unit
40 Stop lights switch
41 Additional stop light
55 Front left/engine cables connection
159 Reversing lights switch
236 Rear cable/tailgate connection
N.D. Ultrasound-soldered joint taped in wiring loom

4D Fuse and relay unit

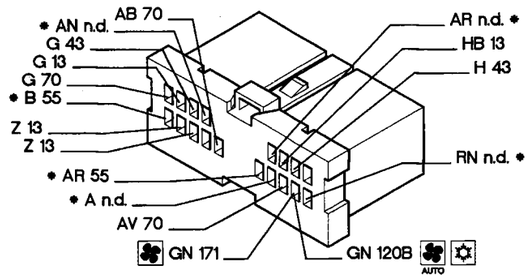

4E Fuse and relay unit

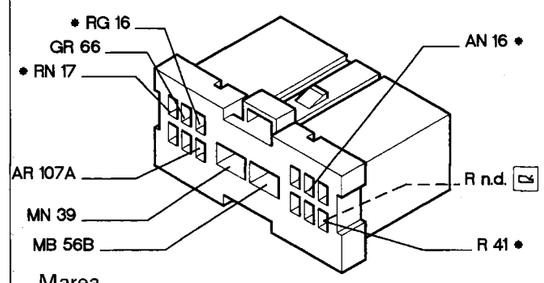

Marea

4E Fuse and relay unit

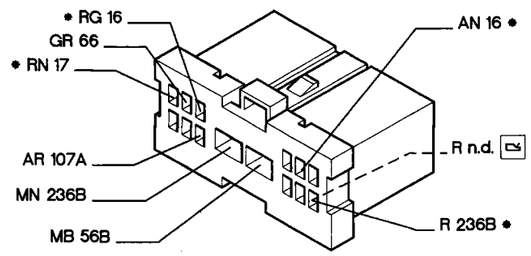

Marea Weekend

4D Fuse and relay unit

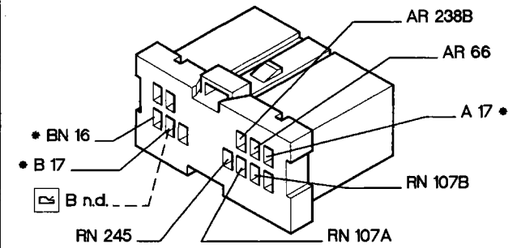

Marea

4G Fuse and relay unit

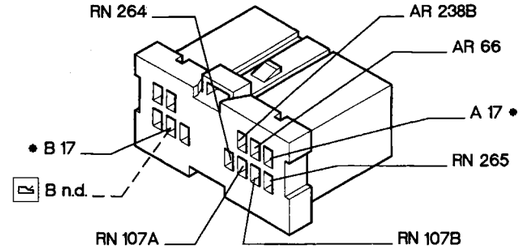

Marea Weekend

4H Fuse and relay unit

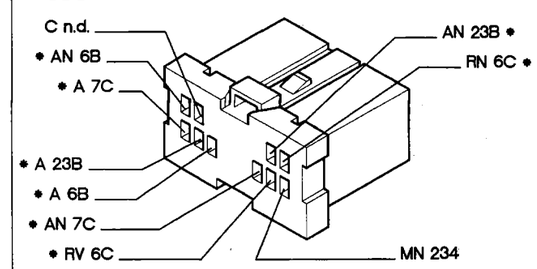

13 Right/left front cables connection

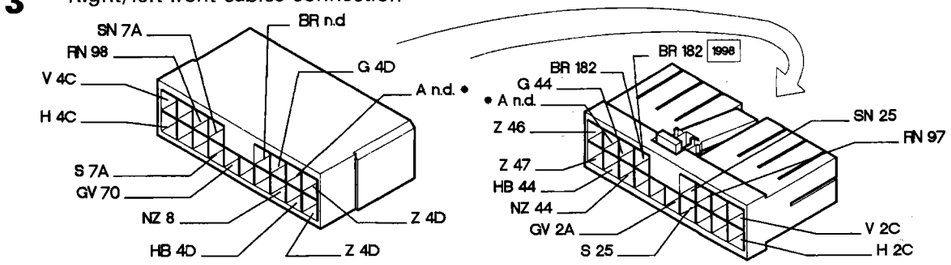

P4F020N01

* The cables involved in the wiring diagram are marked with an asterisk.

4F016N

Versions without Check Panel
Direction indicators and warning lamp - Hazard warning lights - Braking lights - Reversing lights

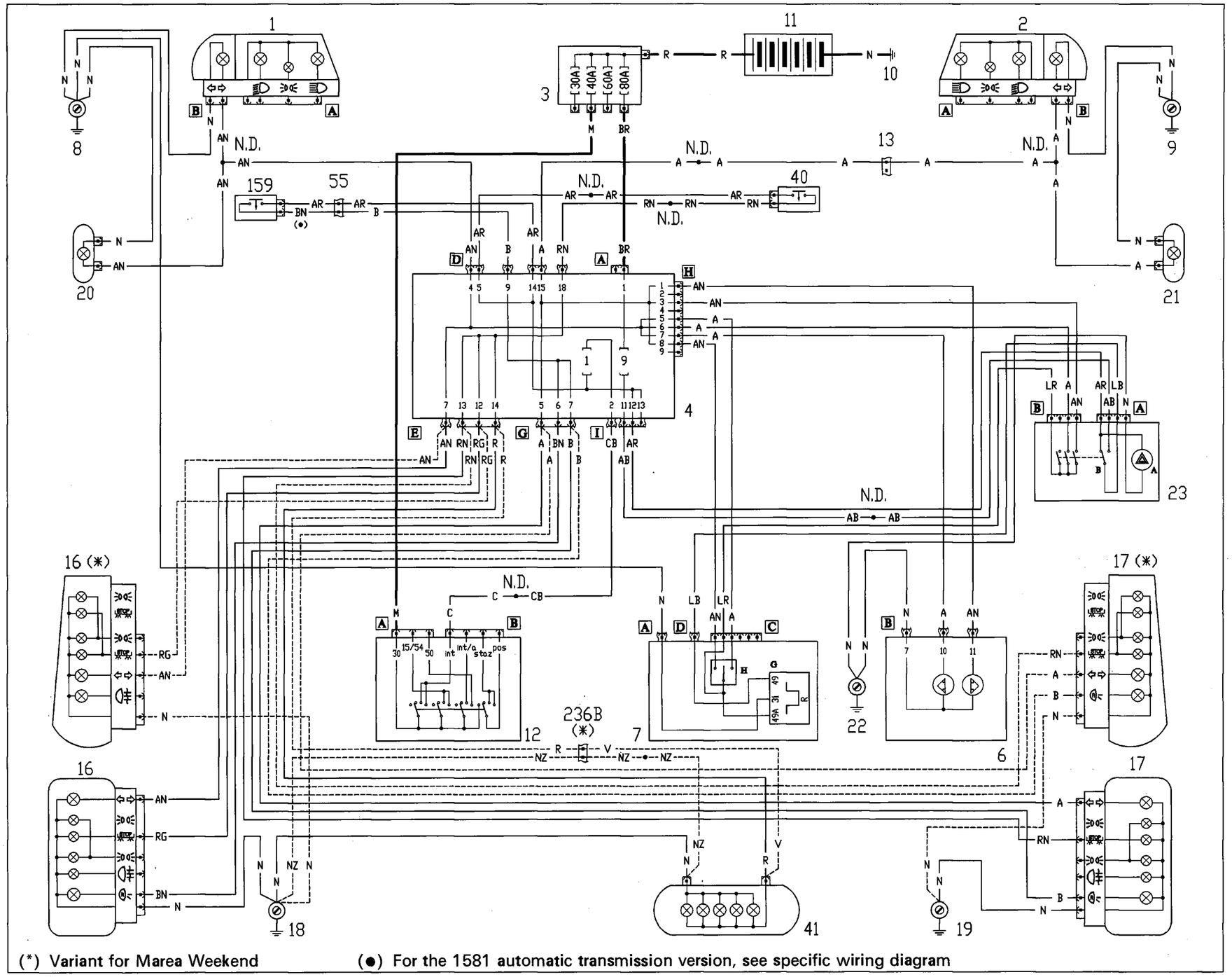

(*) Variant for Marea Weekend (●) For the 1581 automatic transmission version, see specific wiring diagram

4F017N

P4F021N01

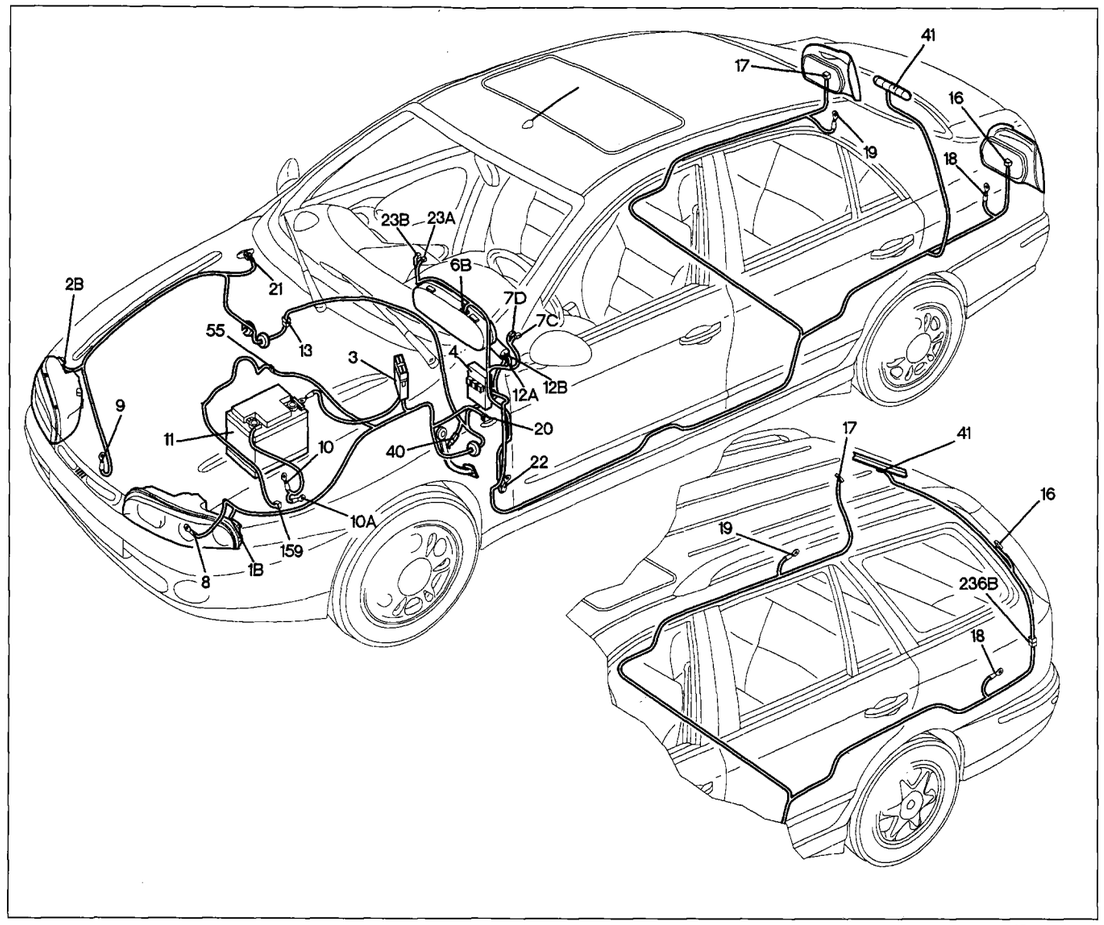

P4F023N01

Versions without Check Panel

Direction indicators and warning lamp - Hazard warning lights - Braking lights - Reversing lights

Key to components

1 Front left lights cluster
2 Front right lights cluster
3 Power fuse box
4 Fuse and relay unit
6 Instrument panel
7 Stalk unit
8 Front left earth
9 Front right earth
10 Battery earth on engine
10A Battery earth on body shell
11 Battery
12 Ignition switch
13 Right/left front cables connection
16 Rear left lights cluster
17 Rear right lights cluster
18 Rear left earth
19 Rear right earth
20 Front left side repeater
21 Front right side repeater
22 Left dashboard earth
23 Hazard warning lights switch unit
40 Stop lights switch
41 Additional stop light
55 Front left/engine cables connection
159 Reversing lights switch
236 Rear cable/tailgate connection
N.D. Ultrasound-soldered joint taped in wiring loom

4F018N

4D Fuse and relay unit

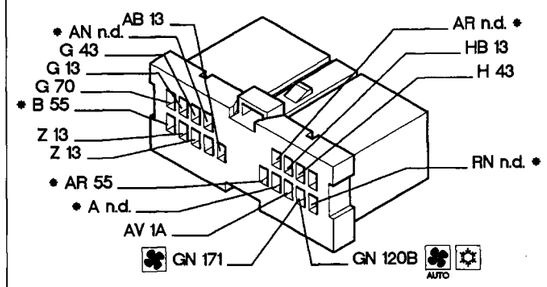

4E Fuse and relay unit

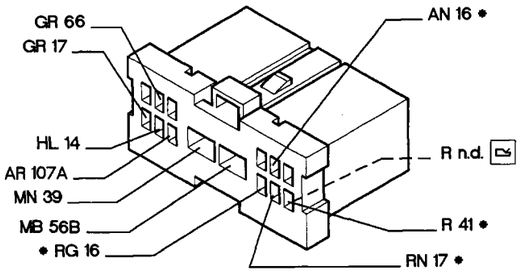

Marea

4E Fuse and relay unit

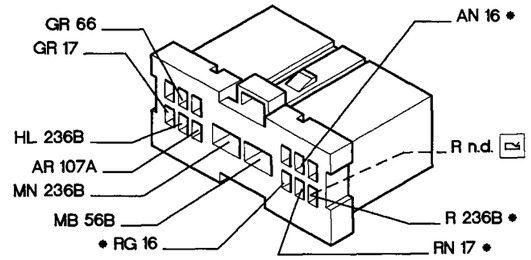

Marea Weekend

4G Fuse and relay unit

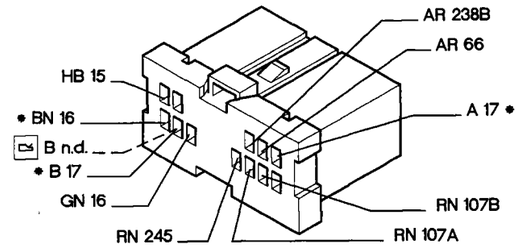

Marea

4D Fuse and relay unit

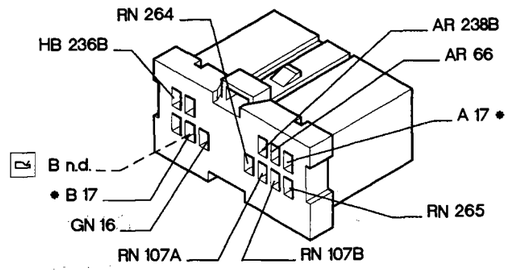

Marea Weekend

4H Fuse and relay unit

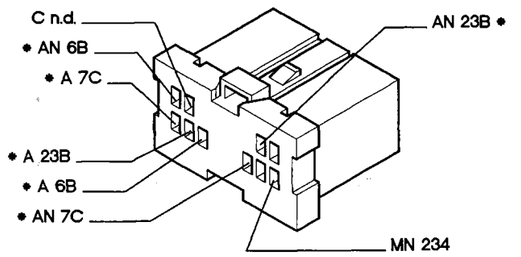

13 Front right/left cables connection

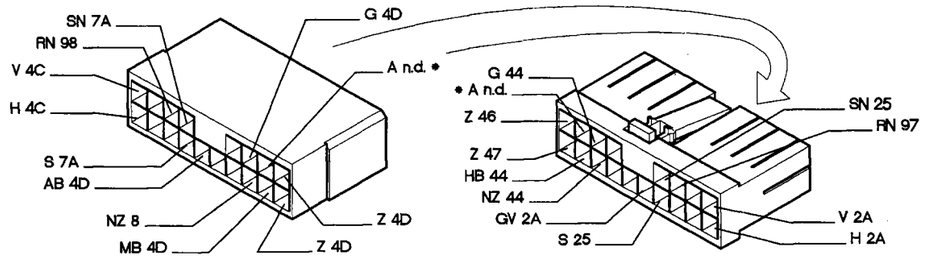

P4F024N01

* The cables involved in the wiring diagram are marked by an asterisk.

4F019N

Fiat Marea

Courtesy light - Symbol illumination

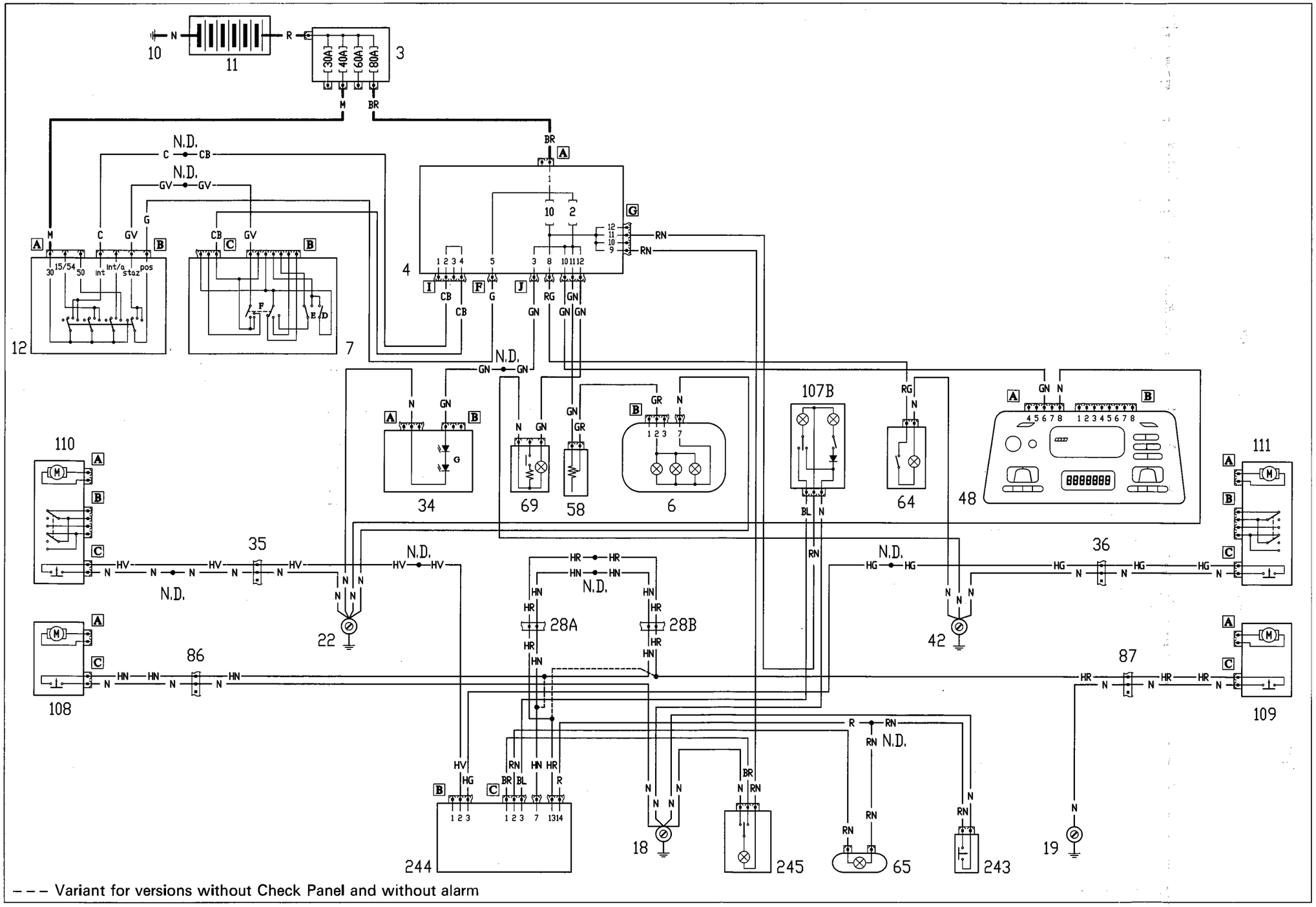

4F020N

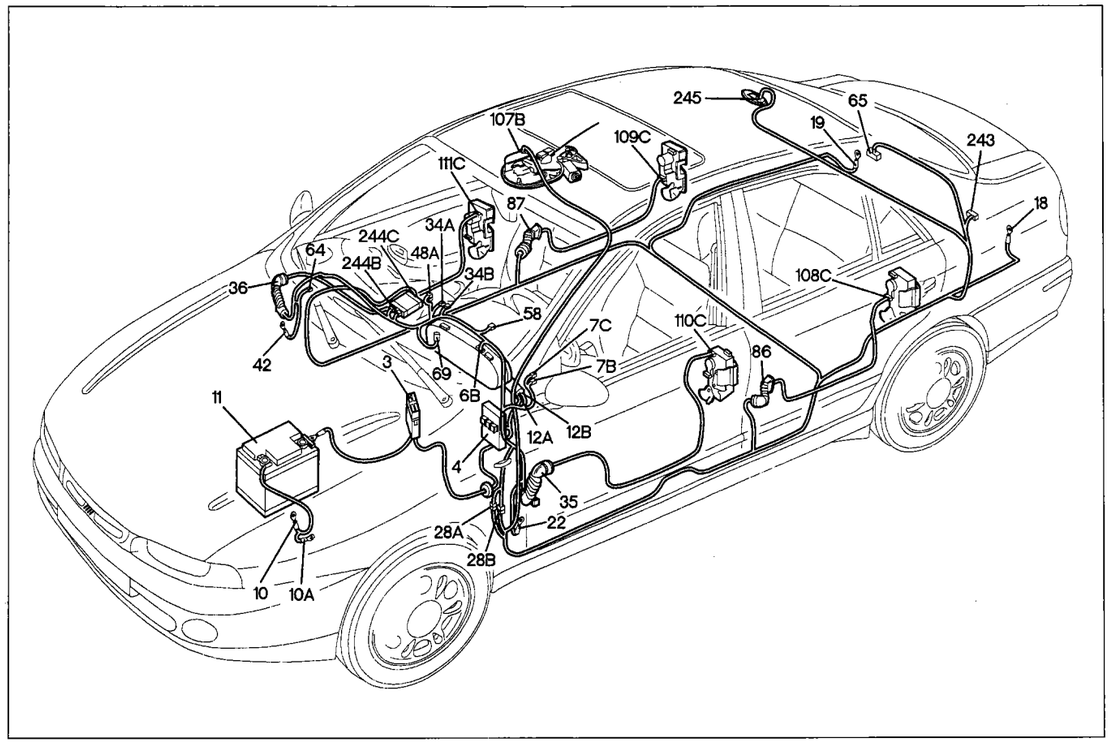

P4F027N01

Fiat Marea

Courtesy light - Symbol illumination

Key to components

3 Power fuse box
4 Fuse and relay unit
6 Instrument panel
7 Stalk unit
10 Battery earth on engine
10A Battery earth on body shell
11 Battery
12 Ignition switch
18 Rear left earth
19 Rear right earth
22 Left dashboard earth
28 Dashboard/rear cables connection
34 Switch control unit
35 Dashboard/front left door cables connection
36 Dashboard/front right door cables connection
42 Right dashboard earth
48 Radio with clock
58 Instrument panel brightness adjustment rheostat
64 Glove compartment light bulb with built-in switch
65 Luggage compartment light bulb
69 Cigarette lighter
86 Rear cables/rear left door cables connection
87 Rear cables/rear right door cables connection
107B Front courtesy light
108 Rear left door lock
109 Rear right door lock
110 Front left door lock
111 Front right door lock
243 Luggage compartment light button
244 Integrated services electronic control unit
245 Rear courtesy light

N.D. Ultrasound-soldered joint taped in wiring loom

4F021N

4J Fuse and relay unit

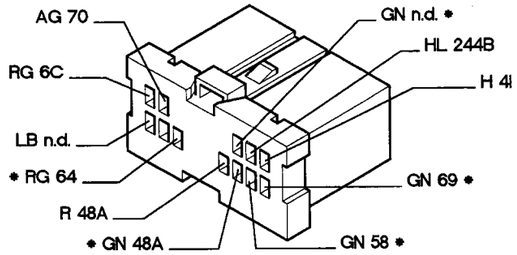

48A Radio with clock

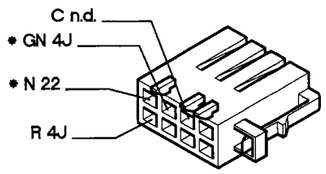

36 Dashboard/front right door cables connection

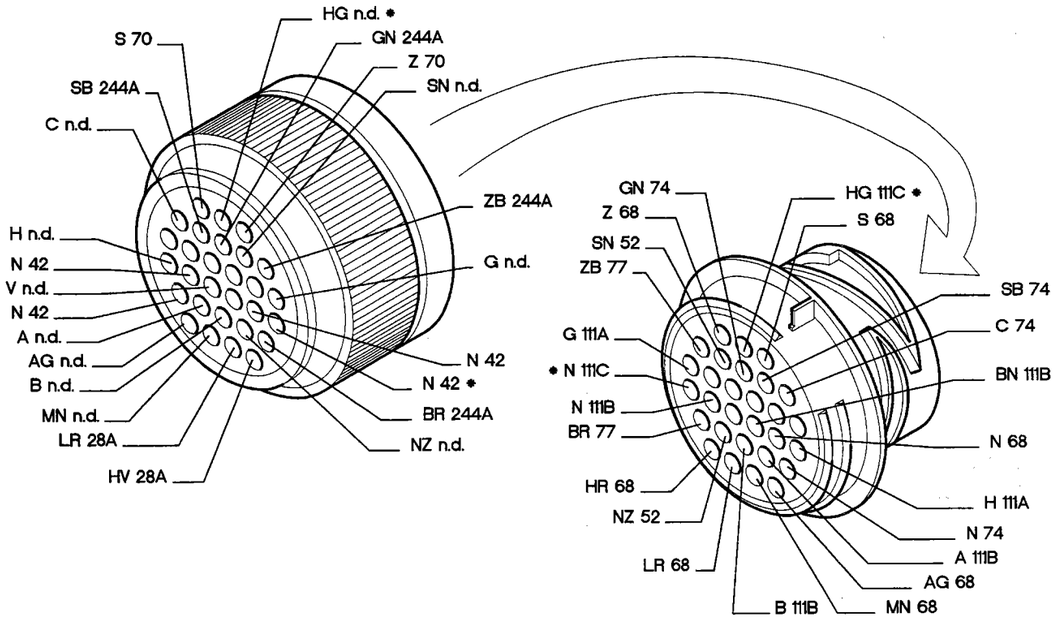

86 Rear cables/rear left door cables connection

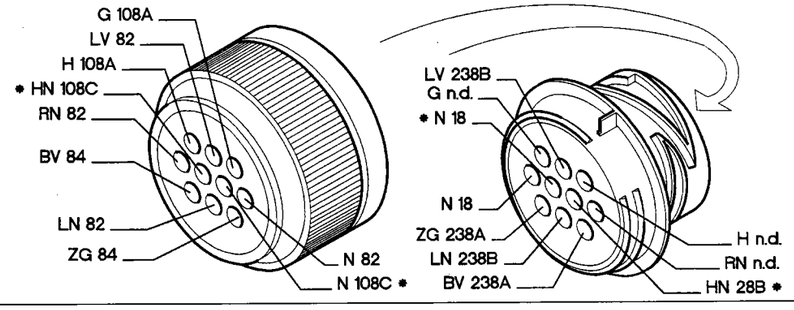

P4F028N01

* The cables involved in the wiring diagram are marked with an asterisk.

4F022N

Fiat **Marea** **Weekend**

Courtesy light - Symbol illumination

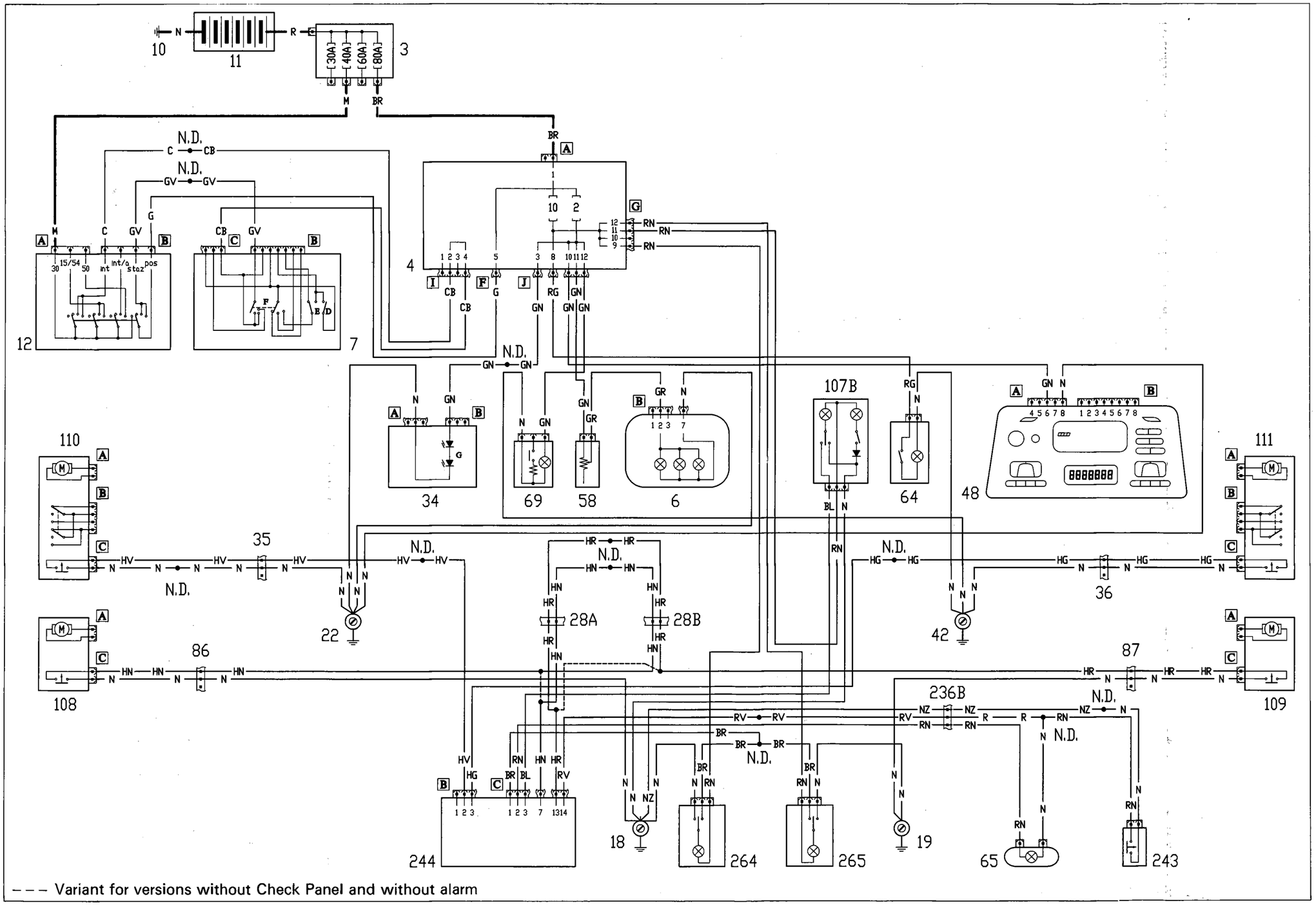

– – – Variant for versions without Check Panel and without alarm

4F023N

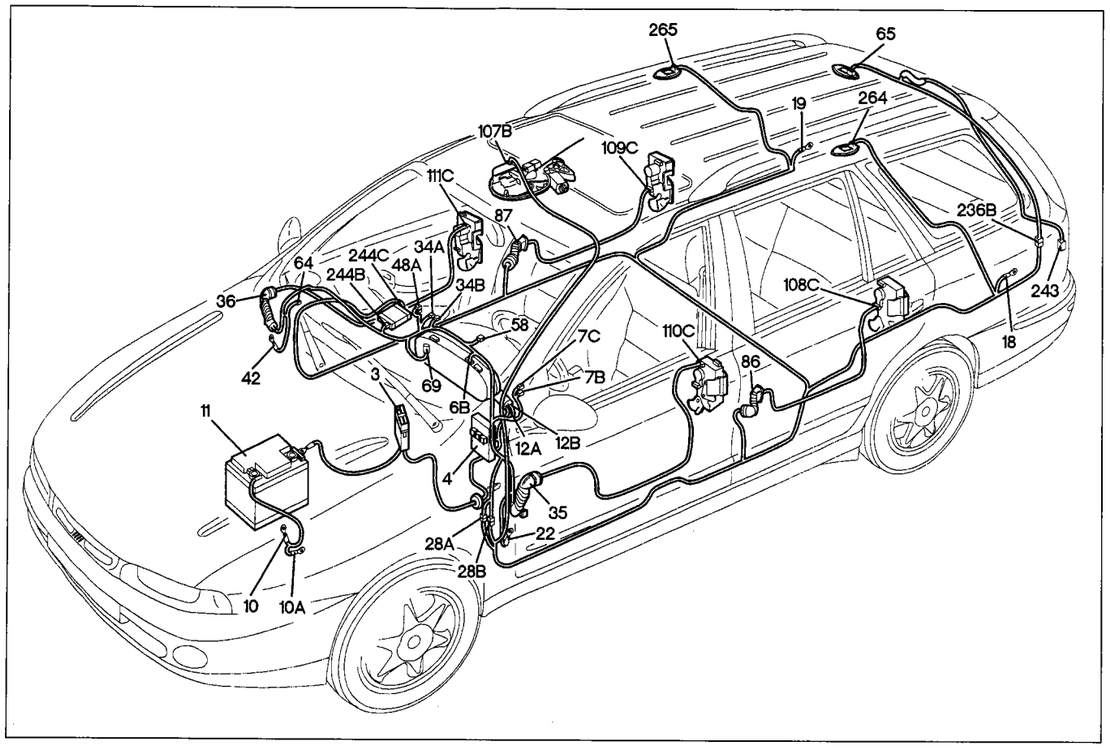

P4F031N01

Fiat Marea Weekend

Courtesy light - Symbol illumination

Key to components

3 Power fuse box
4 Fuse and relay unit
6 Instrument panel
7 Stalk unit
10 Battery earth on engine
10A Battery earth on body shell
11 Battery
12 Ignition switch
18 Rear left earth
19 Rear right earth
22 Left dashboard earth
28 Dashboard/rear cables connection
34 Switch control unit
35 Dashboard/front left door cables connection
36 Dashboard/front right door cables connection
42 Right dashboard earth
48 Radio with clock
58 Instrument panel brightness adjustment rheostat
64 Glove compartment light with built-in switch
65 Luggage compartment light bulb
69 Cigarette lighter
86 Rear/rear left door cables connection
87 Rear/rear right door cables connection
107B Front courtesy light
108 Rear left door lock
109 Rear right door lock
110 Front left door lock
111 Front right door lock
236 Rear cable/tailgate cable connection
243 Luggage compartment light button
244 Integrated services electronic control unit
264 Rear left courtesy light
265 Rear right courtesy light

N.D. Ultrasound-soldered joint taped in wiring loom

4F024N

4J Fuse and relay unit

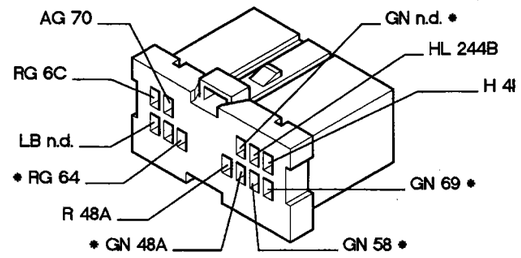

48A Radio with clock

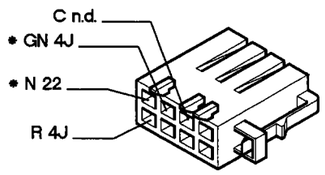

36 Dashboard/front right door cables connection

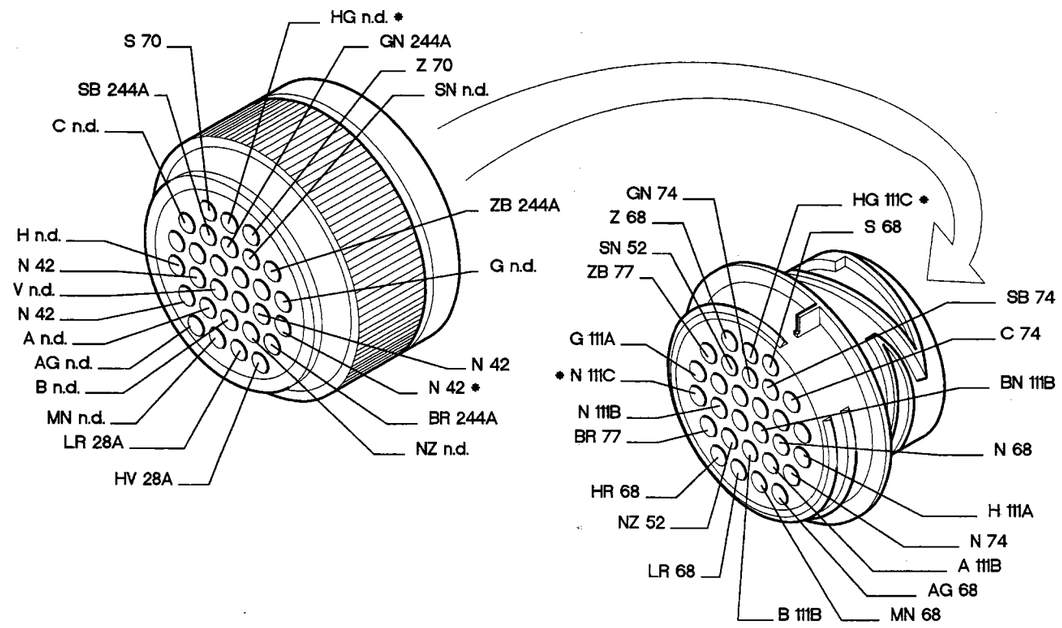

236B Rear cable/tailgate connection

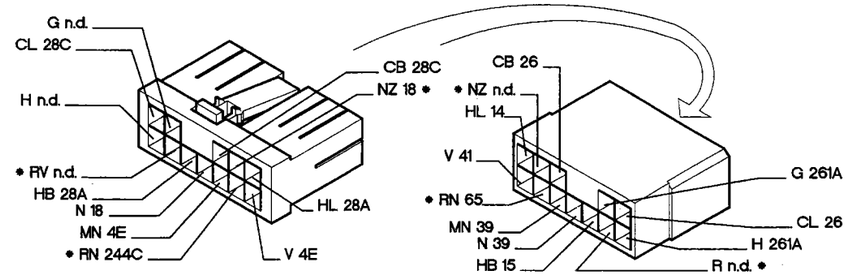

P4F032N01

* The cables involved in the wiring diagram are marked with an asterisk.

4F025N

Radio system (high level: AD 185 H) - Cigarette lighter

(*) Wiring for Compact Disc (●) Marea Weekend only

P4F033N01

4F026N

Location of components

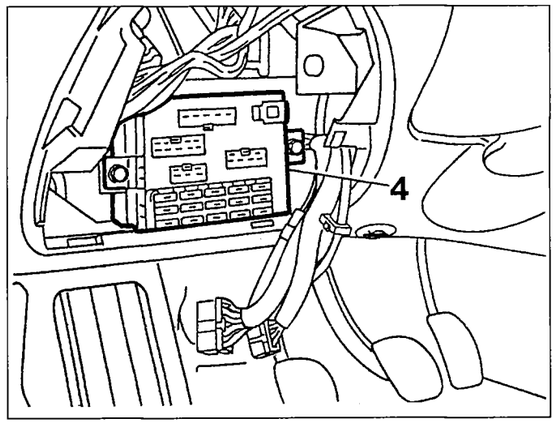

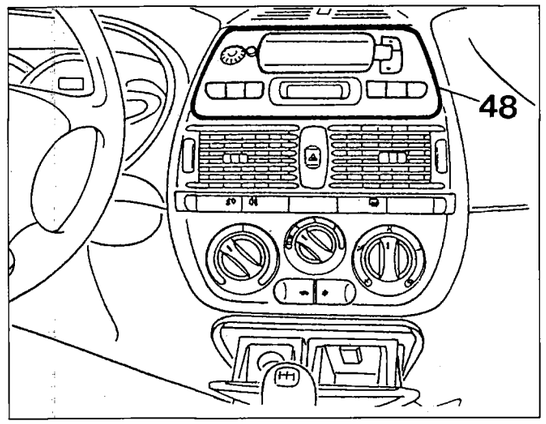

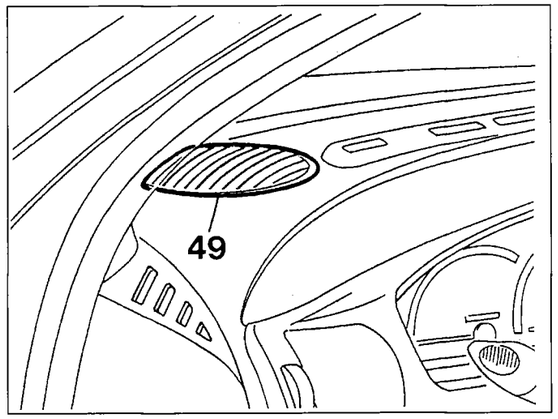

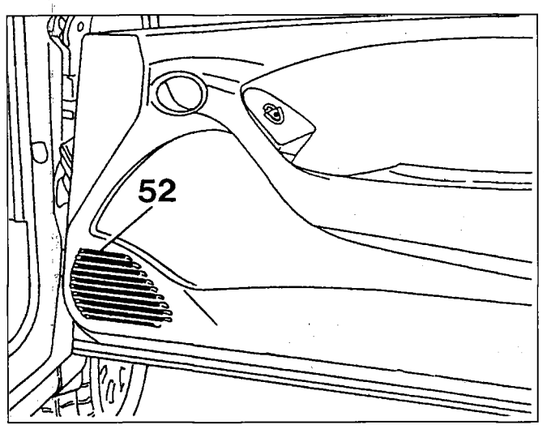

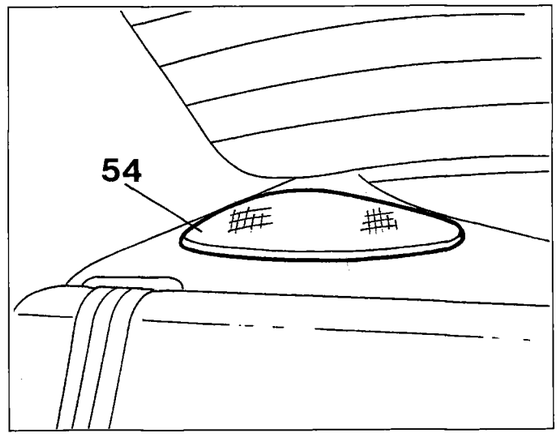

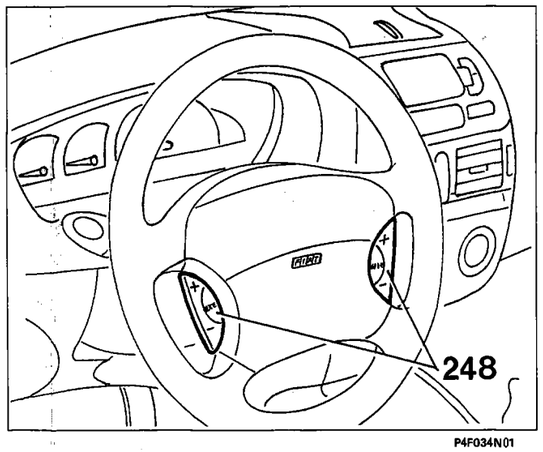

P4F034N01

4F027N

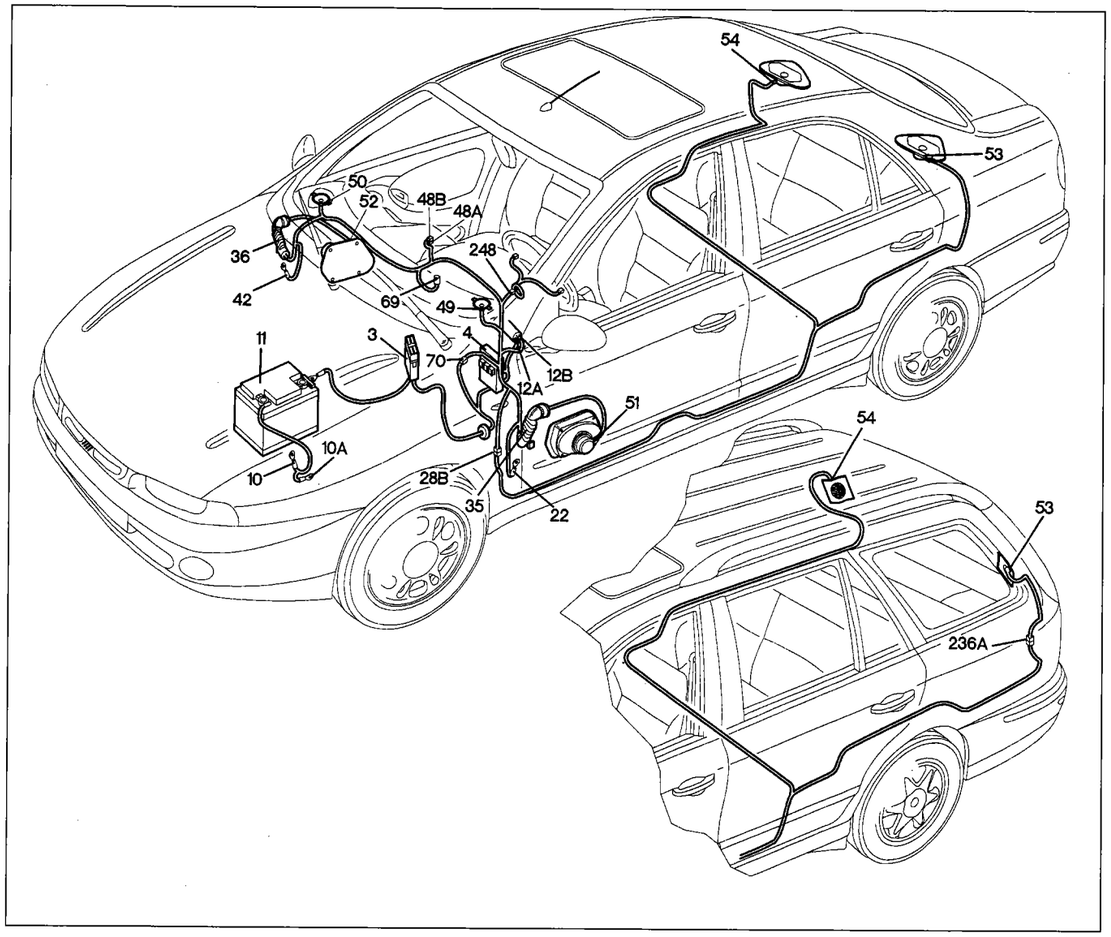

Radio system (high level: AD 185 H) - Cigarette lighter

Key to components

3 Power fuse box
4 Fuse and relay unit
10 Battery earth on engine
10A Battery earth on body shell
11 Battery
12 Ignition switch
22 Left dashboard earth
28 Dashboard/rear cables connection
35 Dashboard/front left door cables connection
36 Dashboard/front right door cables connection
42 Right dashboard earth
48 Radio with clock
49 Front left loudspeaker (tweeter)
50 Front right speaker (tweeter)
51 Loudspeaker on front left door
52 Loudspeaker on front right door
53 Rear left loudspeaker
54 Rear right loudspeaker
69 Cigarette lighter
70 Dashboard/front cables connection
236 Rear cable/tailgate connection
248 Radio controls on steering wheel
N.D. Ultrasound-soldered joint taped in wiring loom

4F028N

4I Fuse and relay unit

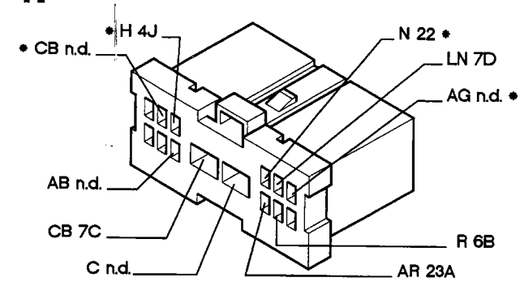

4J Fuse and relay unit

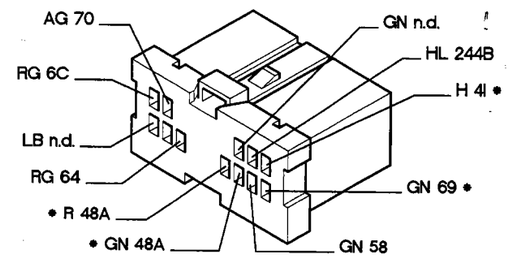

28B Dashboard/rear cables connection

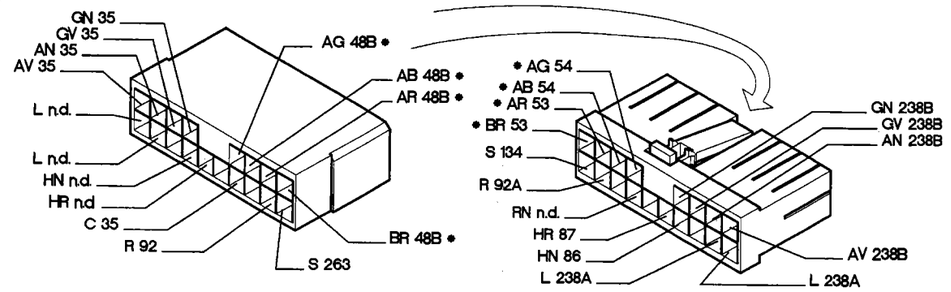

35 Dashboard/front left door cables connection

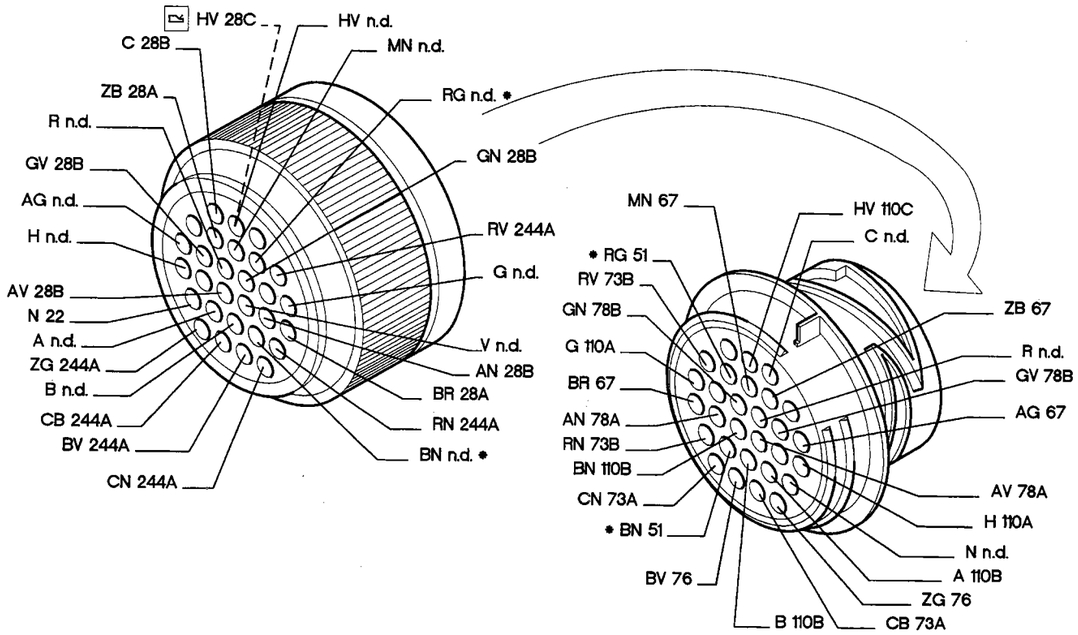

P4F036N01

* The cables involved in the wiring diagram are marked with an asterisk.

4F029N

Radio system (medium level: AD 185 M) - Cigarette lighter

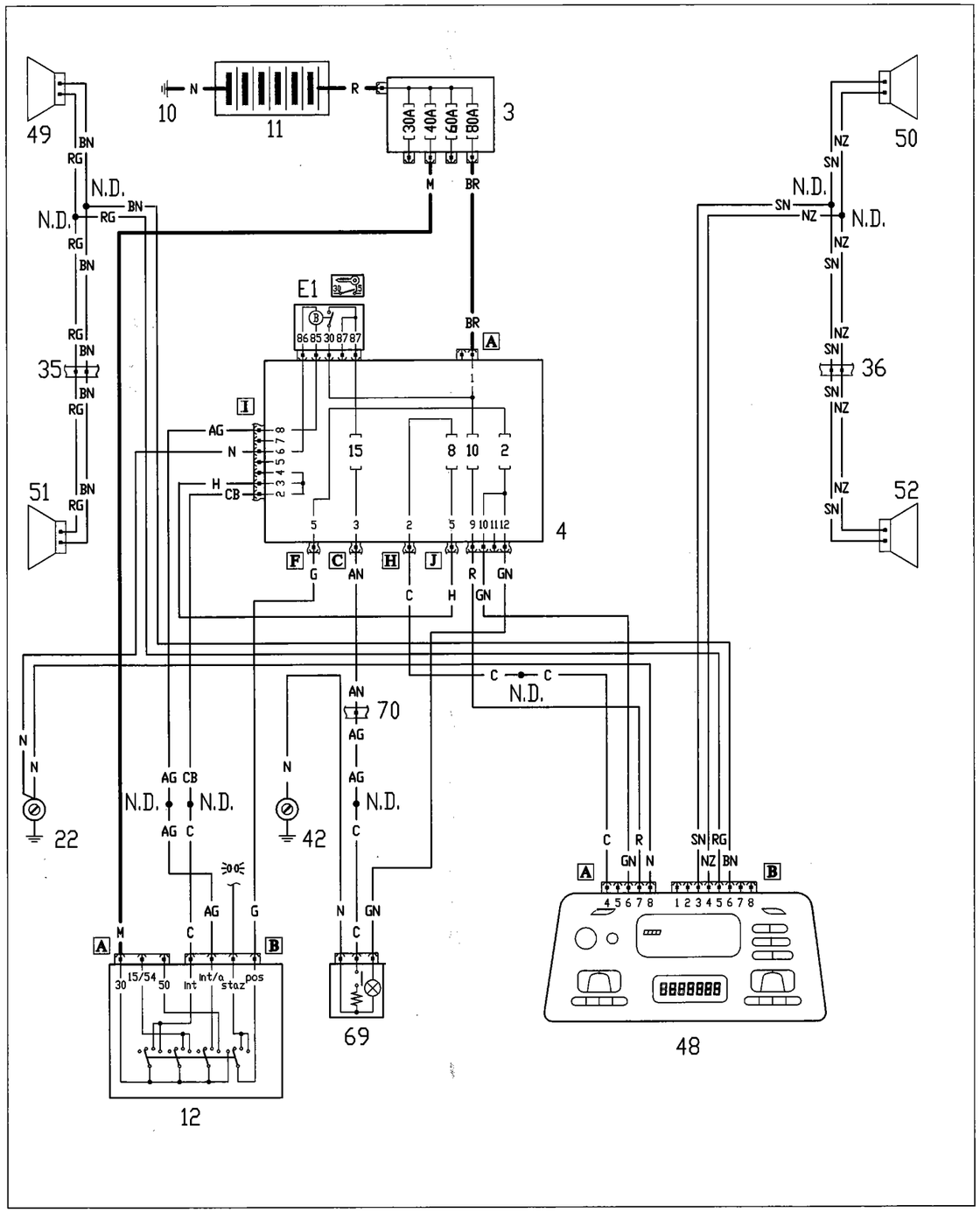

4F030N

Location of components

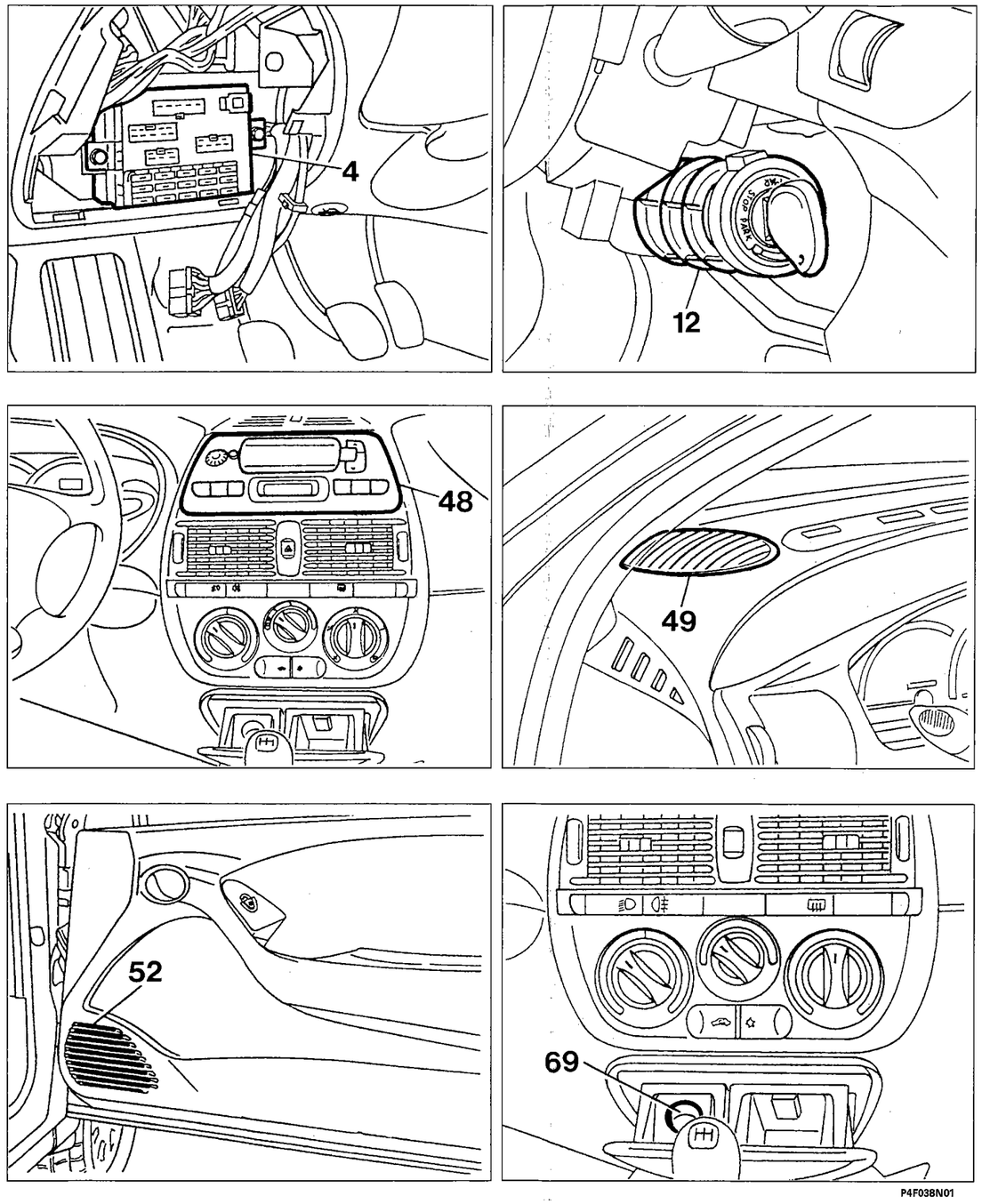

4F031N

55.

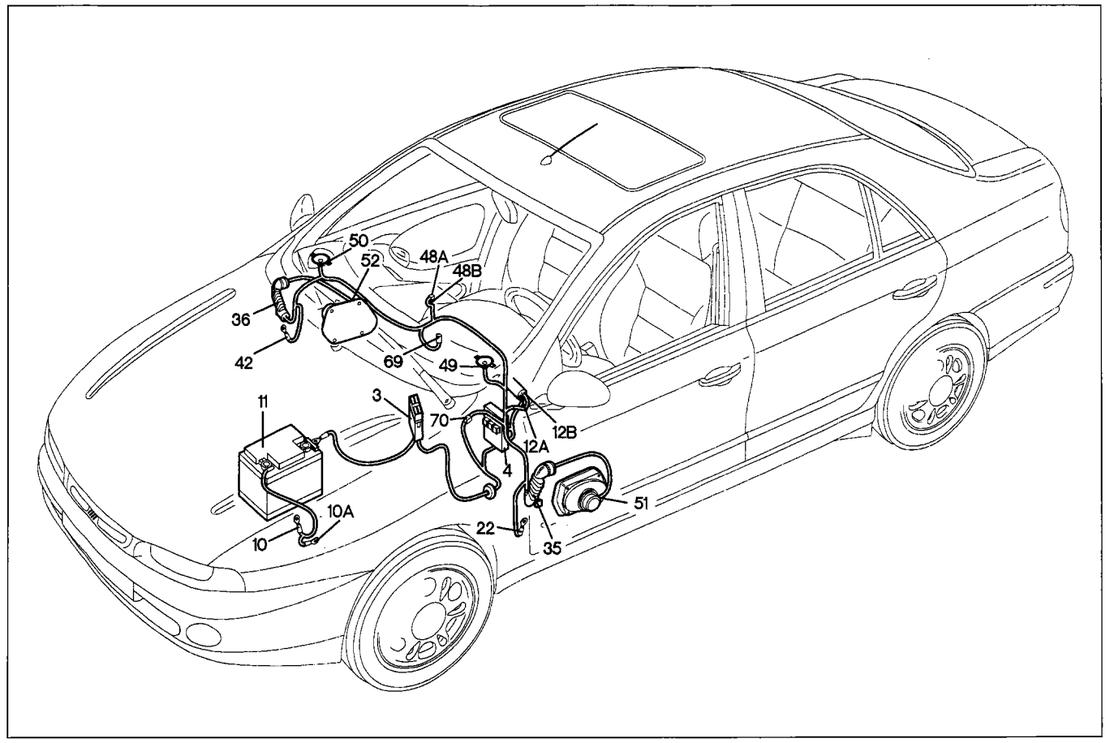

P4F039N01

Radio system (medium level: AD 185 M) - Cigarette lighter

Key to components

3 Power fuse box
4 Fuse and relay unit
10 Battery earth on engine
10A Battery earth on body shell
11 Battery
12 Ignition switch
22 Left dashboard earth
35 Dashboard/front left door cables connection
36 Dashboard/front right door cables connection
42 Right dashboard earth
48 Radio with clock
49 Front left loudspeaker (tweeter)
50 Front right speaker (tweeter)
51 Loudspeaker on front left door
52 Loudspeaker on front right door
69 Cigarette lighter
70 Dashboard/front cables connection
N.D. Ultrasound-soldered joint taped in wiring loom

4F032N

4I Fuse and relay unit

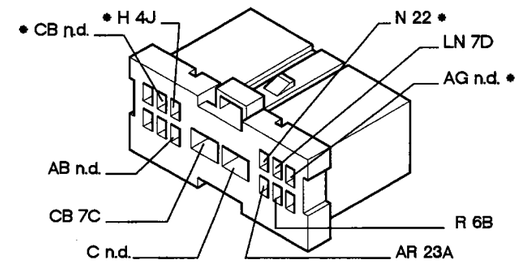

4J Fuse and relay unit

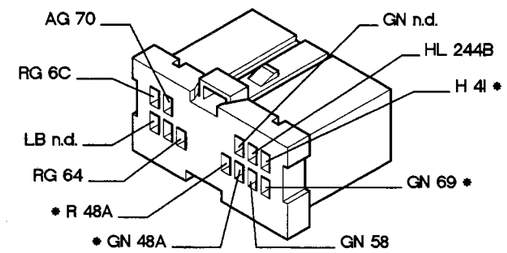

35 Dashboard/front left door cables connection

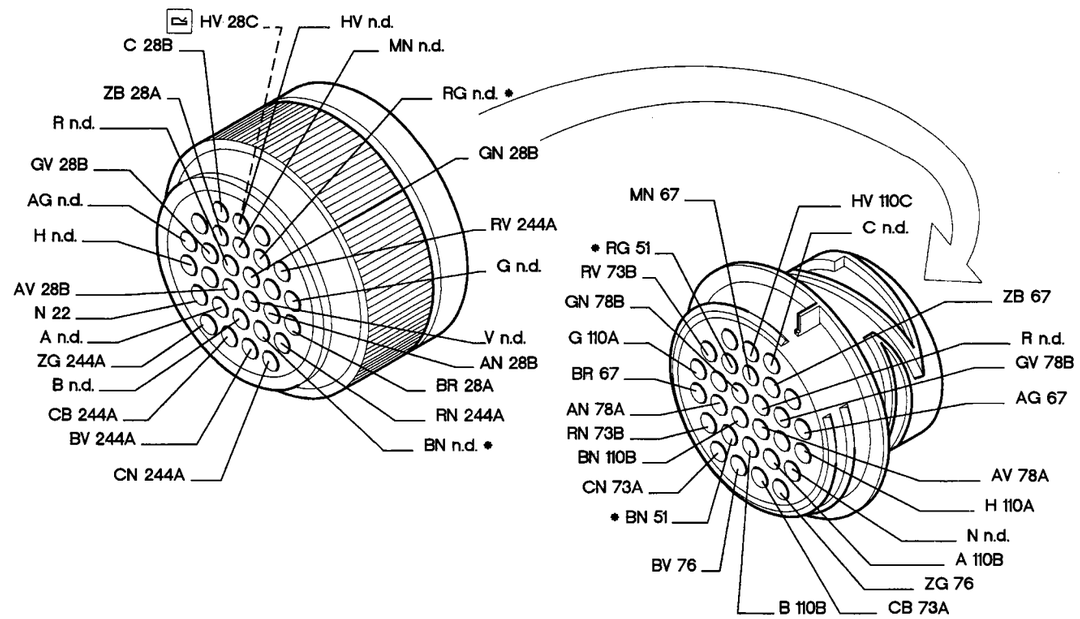

70 Dashboard/front cables connection

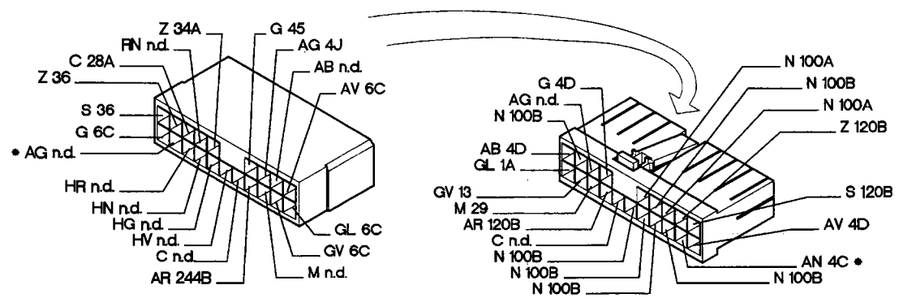

P4F040N01

* The cables involved in the wiring diagram are marked with an asterisk.

4F033N

Electric front windows

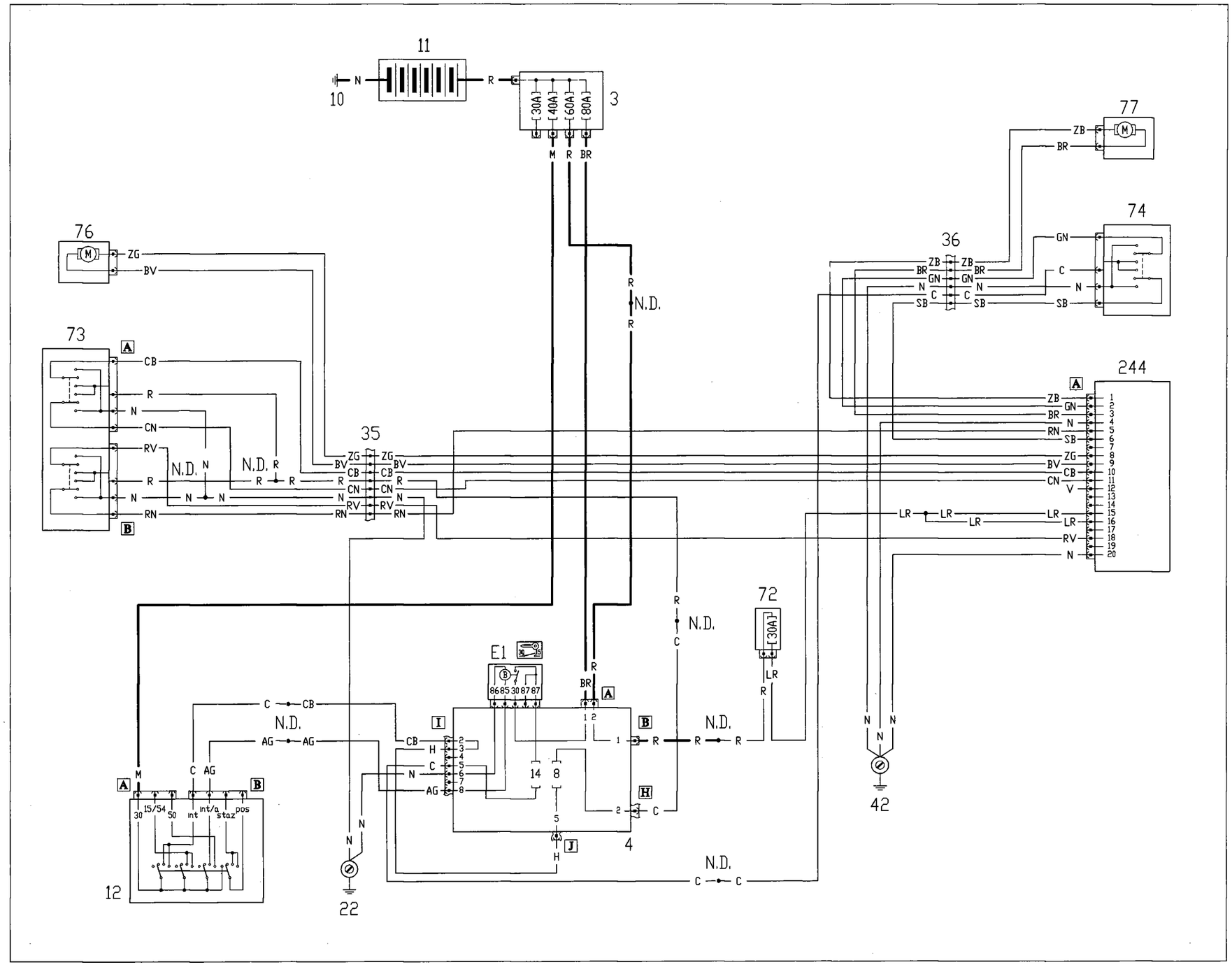

4F034N

P4F041N01

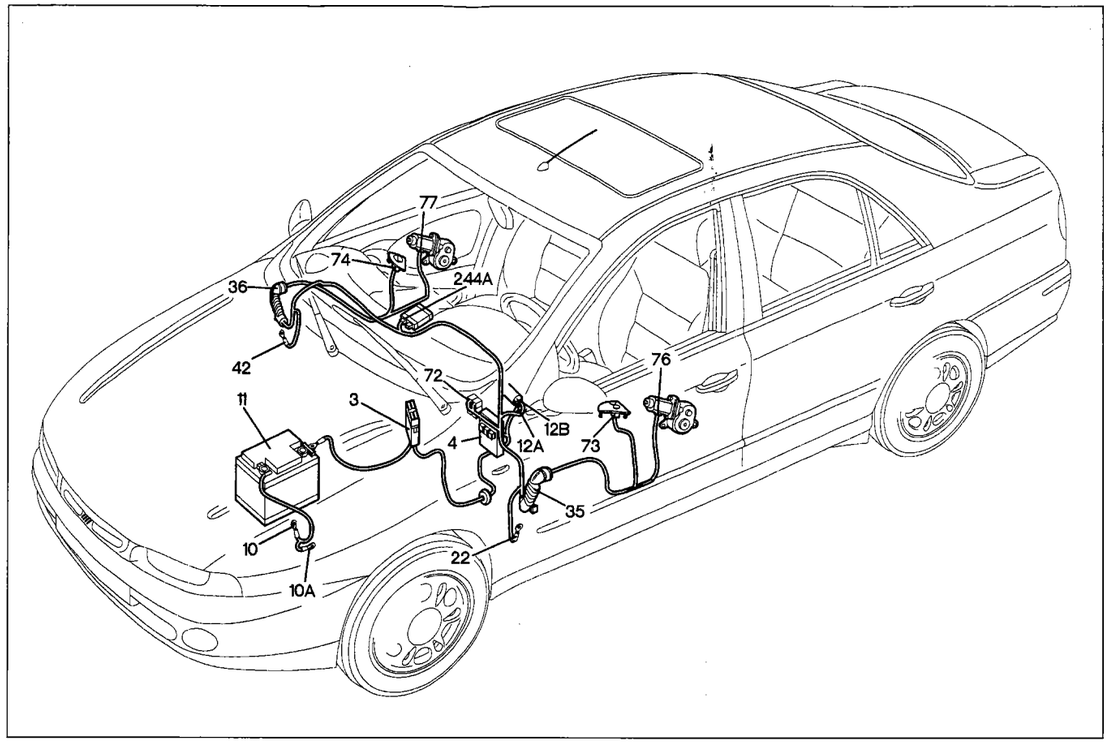

P4F043N01

Electric front windows

Key to components

3 Power fuse box
4 Fuse and relay unit
10 Battery earth on engine
10A Battery earth on body shell
11 Battery
12 Ignition switch
22 Left dashboard earth
35 Dashboard cables/front left door cables connection
36 Dashboard cables/front right door cables connection
42 Right dashboard earth
72 Electric front windows fuse
73 Electric front windows pushbutton unit on right armrest
74 Right electric front windows pushbutton unit on right armrest
76 Front left electric window motor
77 Front right electric window motor
244 Integrated services electronic control unit

N.D. Ultrasound-soldered joint taped in wiring loom

4F036N

35 Dashboard/front left door cables connection

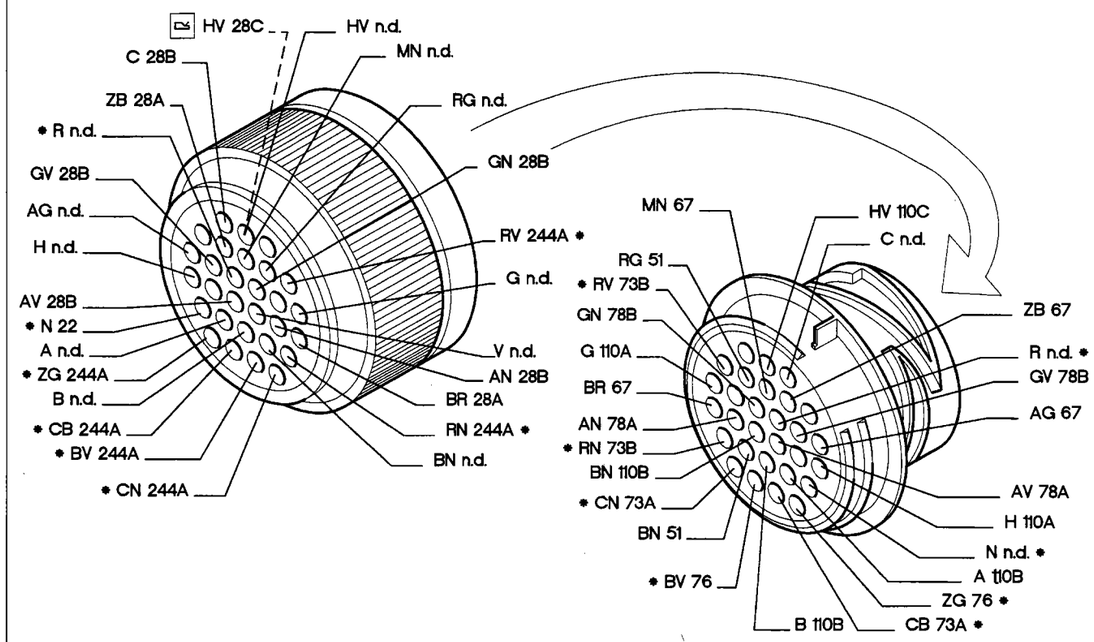

36 Dashboard/front right door cables connection

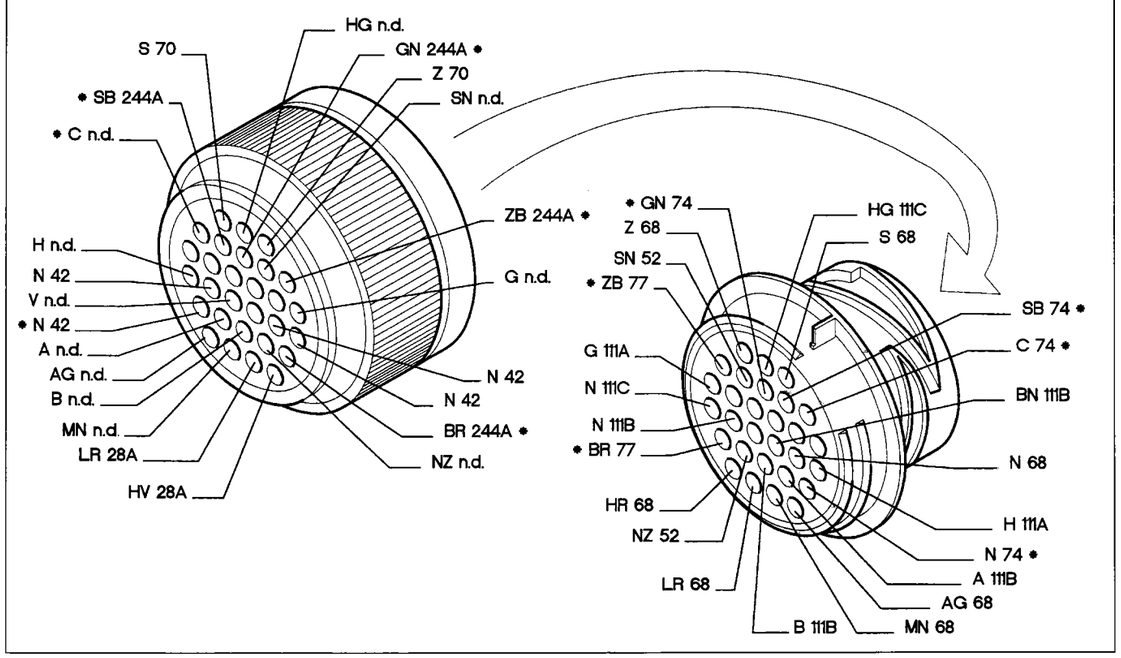

P4F044N01

* The cables involved in the wiring diagram are marked with an asterisk.

4F036N

Electric rear windows

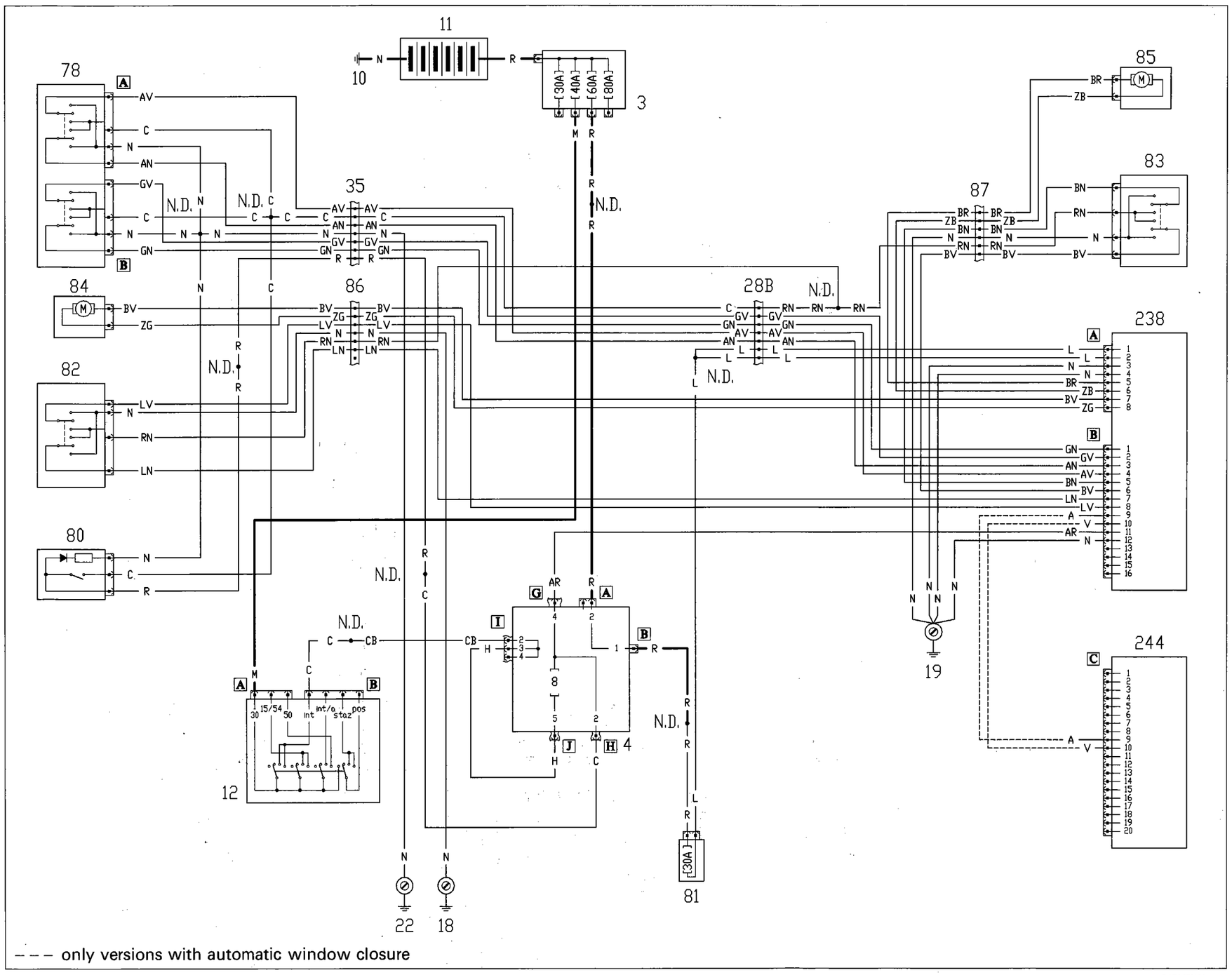

P4F045N01

4F037N

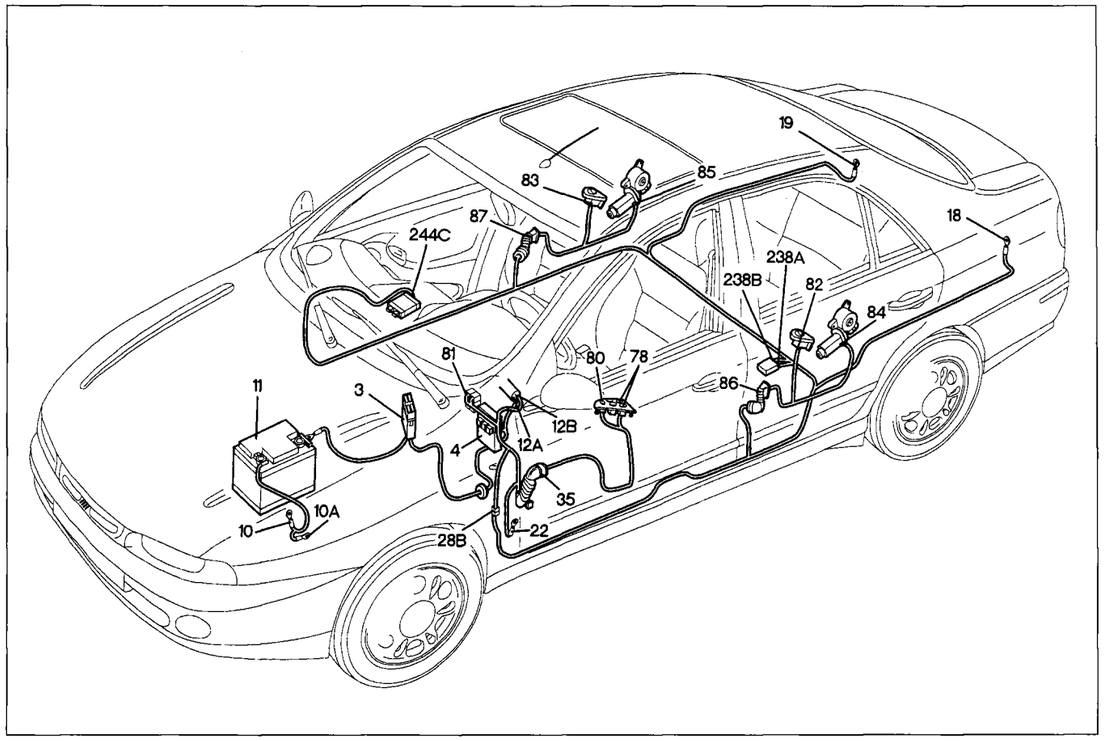

P4F047N01

Electric rear windows

Key to components

3 Power fuse box
4 Fuse and relay unit
10 Battery earth on engine
10A Battery earth on body shell
11 Battery
12 Ignition switch
18 Rear left earth
19 Rear right earth
22 Left dashboard earth
35 Dashboard/front left door cables connection
78 Rear electric windows pushbutton unit on front left door
80 Rear electric windows inhitibor switch
81 Rear electric windows fuse
82 Pushbutton unit for rear left electric window on rear left door
83 Pushbutton unit for rear right electric window on rear right door
84 Rear left window motor
85 Rear right window motor
86 Rear cables/rear left door cables connection
87 Rear cables/rear right door cables connection
238 Rear electric windows control unit
244 Integrated services electronic control unit

N.D. Ultrasound-soldered joint taped in wiring loom

4F038N

28B Dashboard/rear cables connection

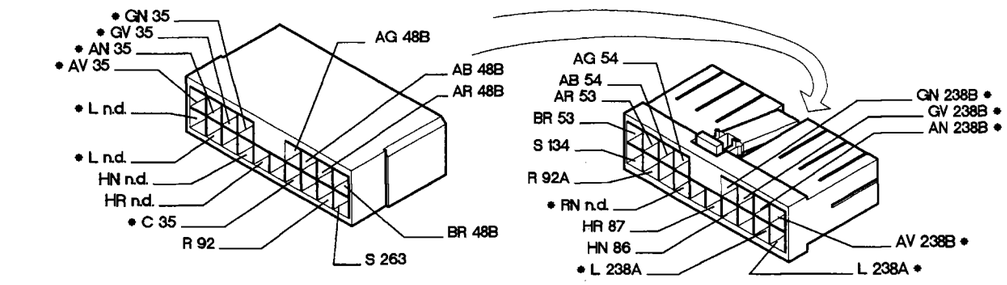

35 Dashboard/front left door cables connection

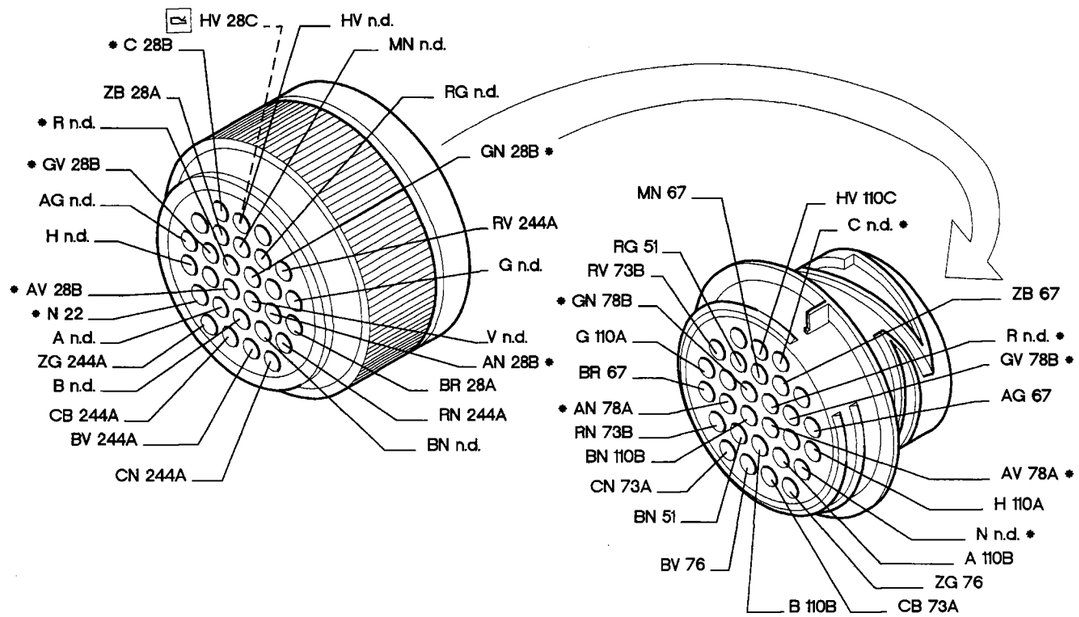

87 Rear cables/rear right door cables connection

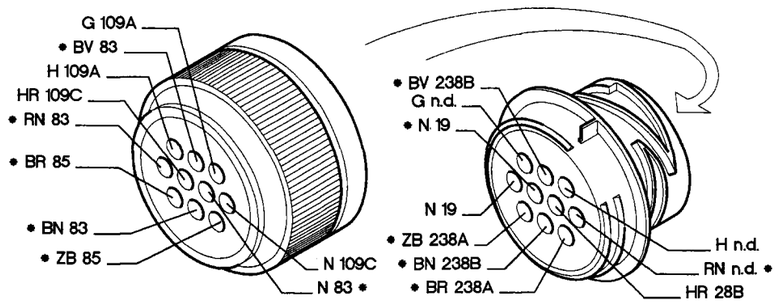

P4F048N01

* The cables involved in the wiring diagram are marked with an asterisk.

4F039N

Fiat CODE system and warning light

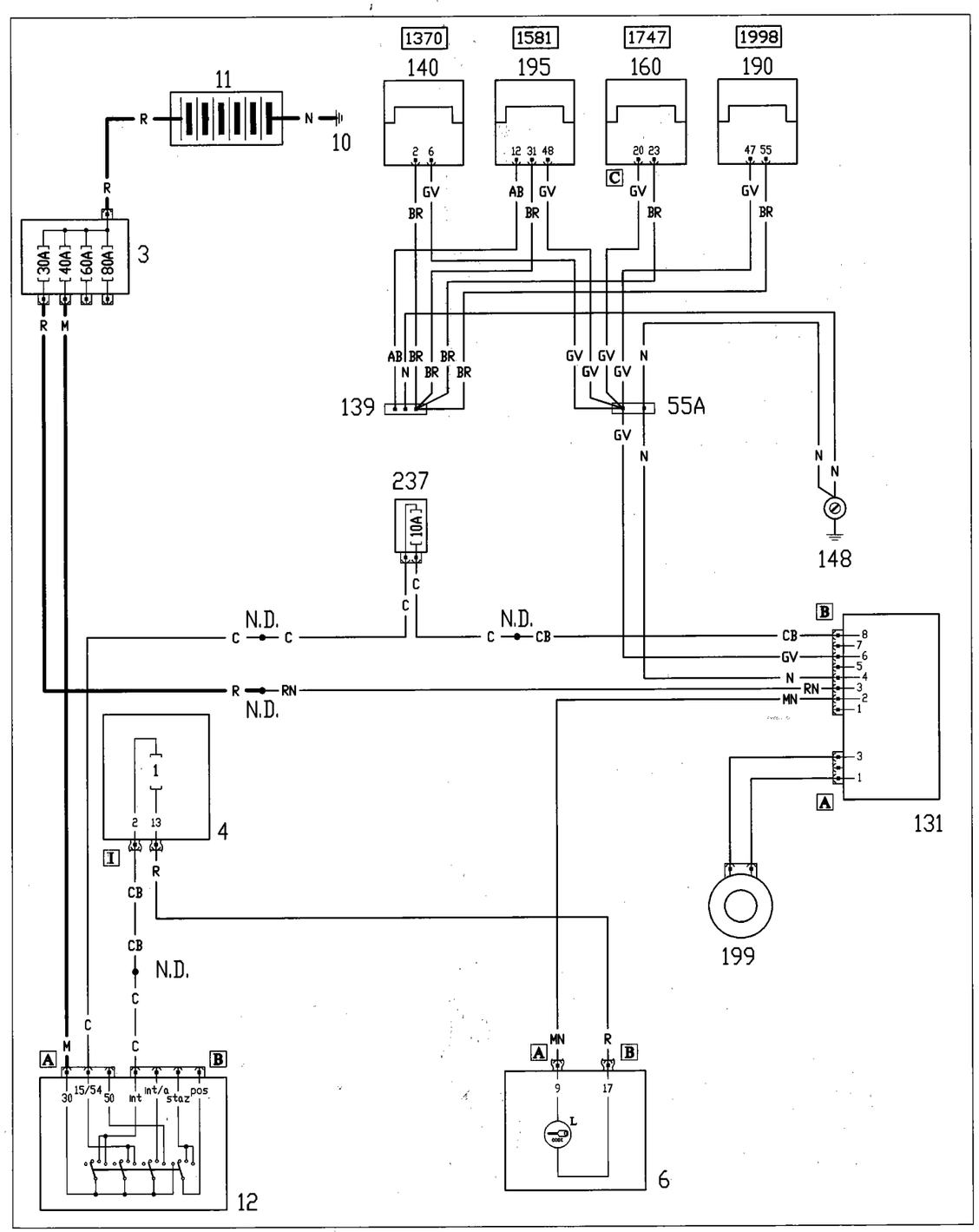

4F040N

Location of components

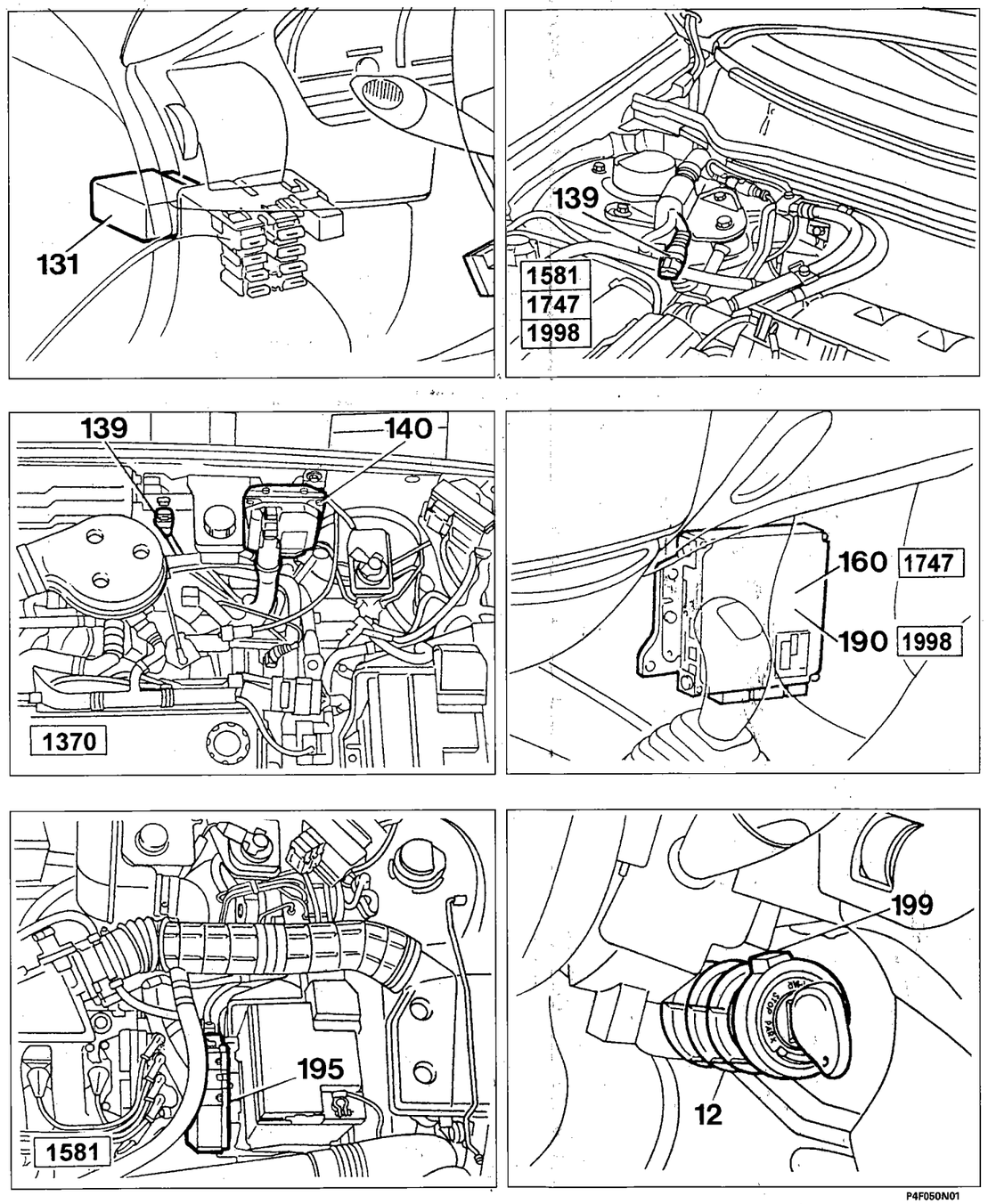

4F041N

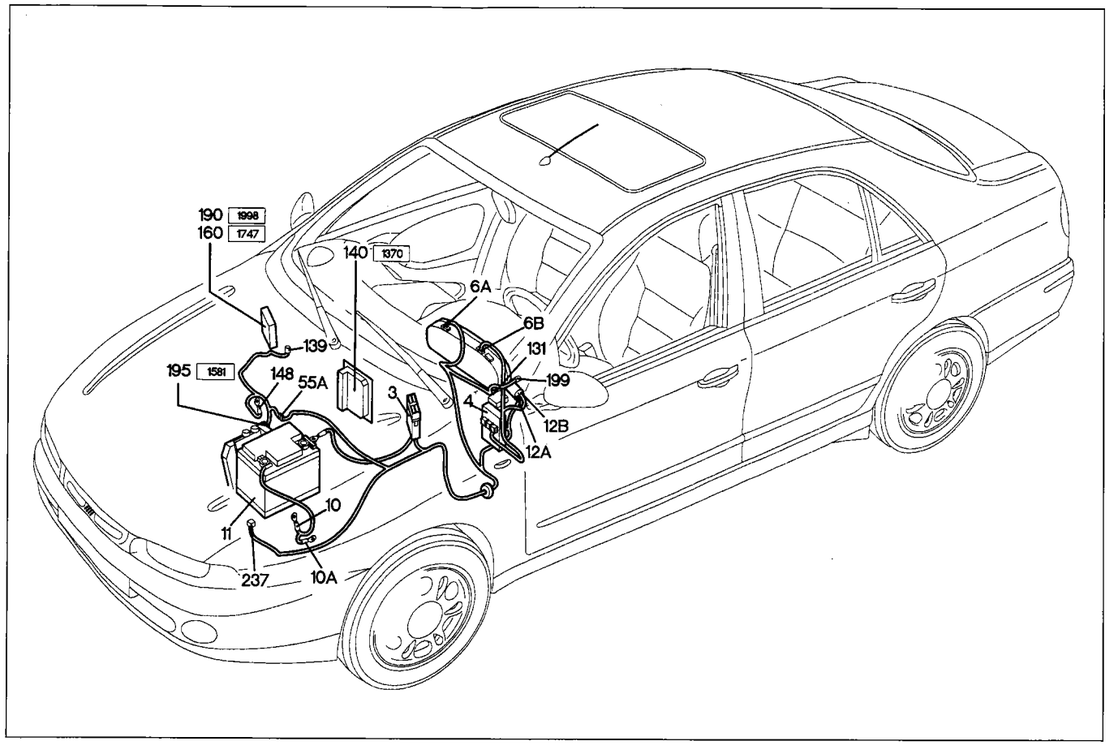

P4F051N01

Fiat CODE system and warning light

Key to components

3 Power fuse box
4 Fuse and relay unit
6 Instrument panel
10 Battery earth on engine
10A Battery earth on body shell
11 Battery
12 Ignition switch
55A Front/left engine cables connection
131 Fiat CODE electronic control unit
139 Diagnostic socket for injection
140 Fuel injection/ignition control unit (1370)
148 Earth for electronic fuel injection
160 Ignition/fuel injection electronic control unit (1747)
190 Ignition/fuel injection electronic control unit (1998)
195 Ignition/fuel injection electronic control unit (1581)
199 Aerial for Fiat CODE system
237 Fiat CODE system fuse

N.D. Ultrasound-soldered joint taped in wiring loom

4F042N

55A Front left/engine cables connection

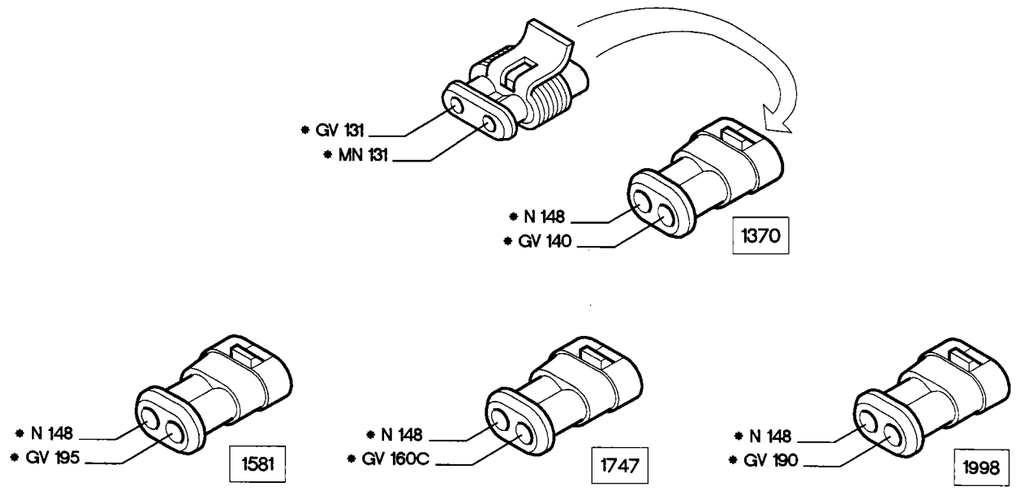

131 B Fiat CODE electronic control unit

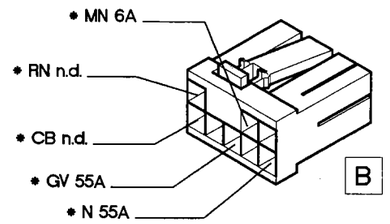

139 Diagnostic socket for fuel injection

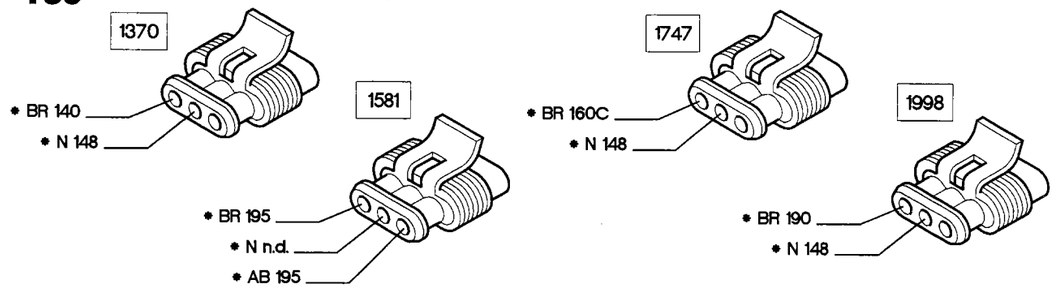

P4F052N01

* The cables involved in the wiring diagram are marked with an asterisk.

4F043N

Alarm system

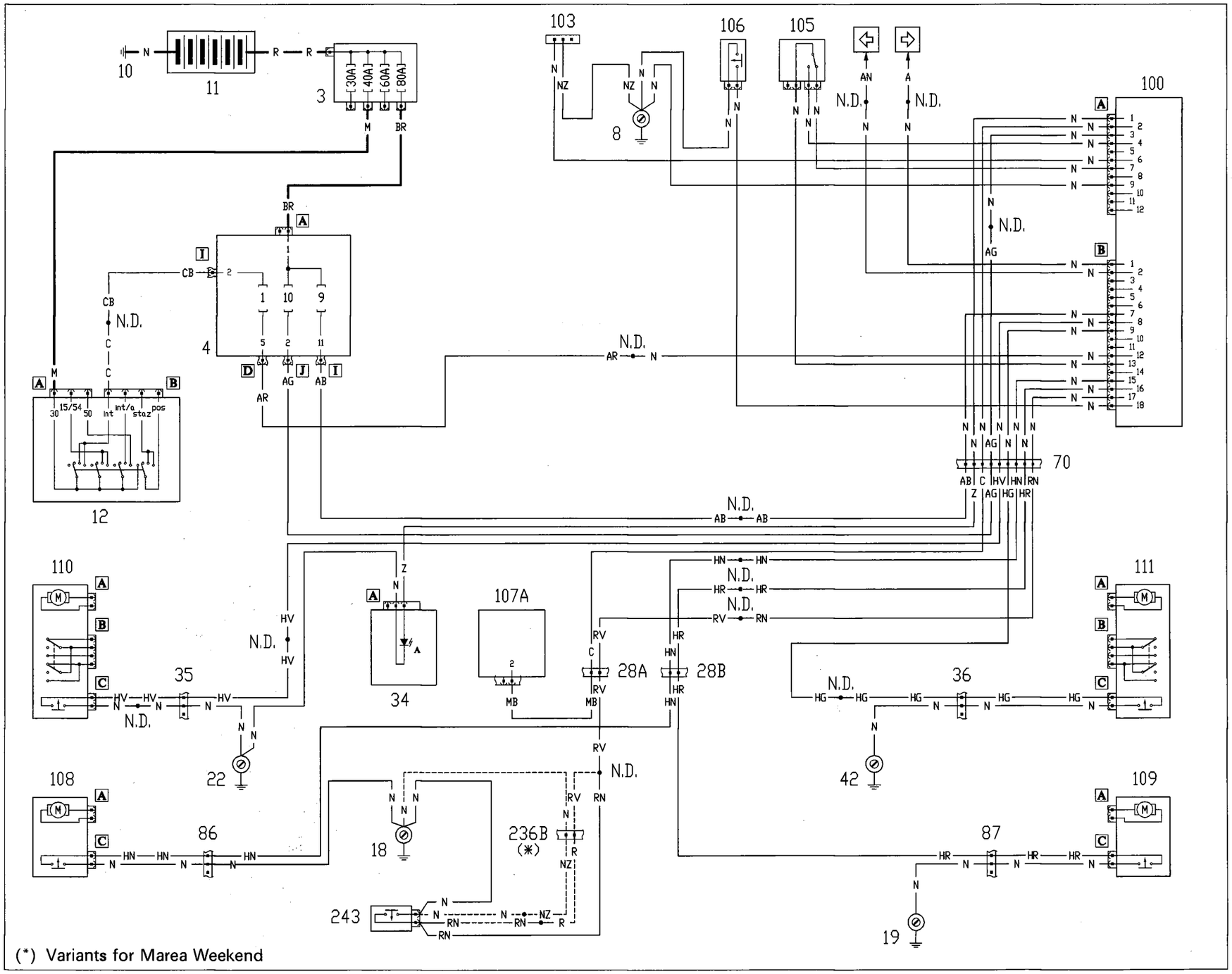

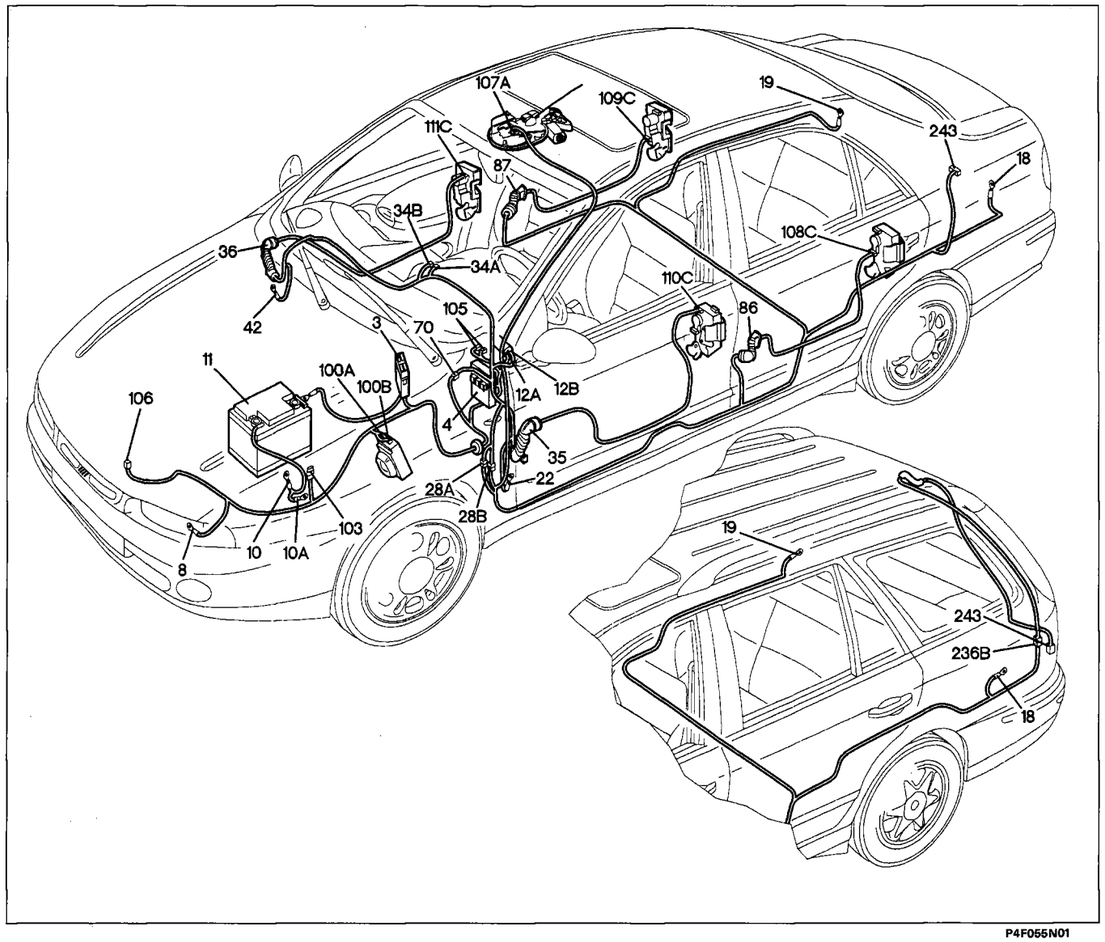

P4F055N01

Alarm system

Key to components

3 Power fuse box
4 Fuse and relay unit
8 Front left earth
10 Battery earth on engine
10A Battery earth on body shell
11 Battery
12 Ignition switch
18 Rear left earth
19 Rear right earth
22 Left dashboard earth
28 Dashboard/rear cables connection
34 Switch control unit
35 Dashboard/front left door cables connection
36 Dashboard/front right door cables connection
42 Right dashboard earth
70 Dashboard/front cables connection
86 Rear cables/front left door cables connection
87 Rear cables/front right door cables connection
100 Alarm system electronic control unit
103 Diagnostic socket for alarm
105 Switch for switching off alarm system
106 Alarm switch on bonnet
107A Door lock remote control receiver
108 Rear left door lock
109 Rear right door lock
110 Front left door lock
111 Front right door lock
236 Rear cable/tailgate connection
243 Luggage compartment light button

N.D. Ultrasound-soldered joint taped in wiring loom

4F046N

28A Dashboard/rear cables connection

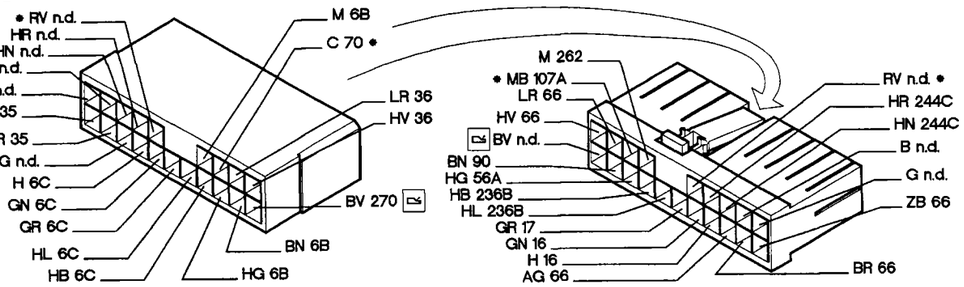

28B Dashboard/rear cables connection

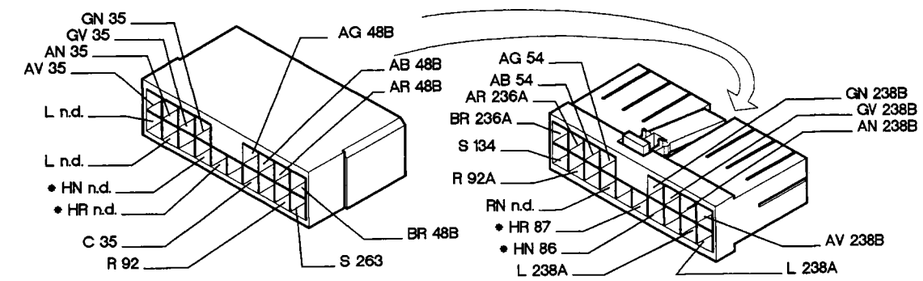

70 Dashboard/front cables connection

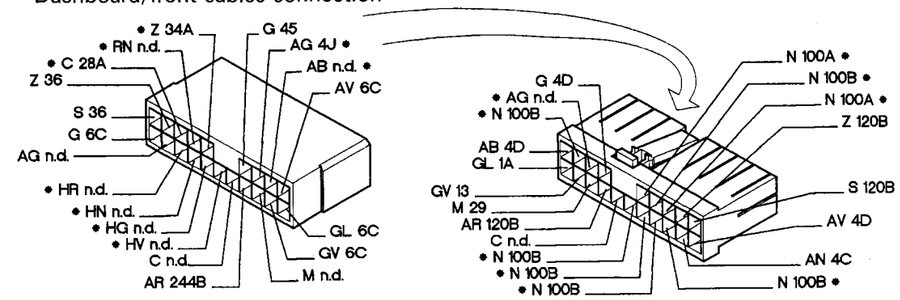

86 Rear cables/rear left door cables connection

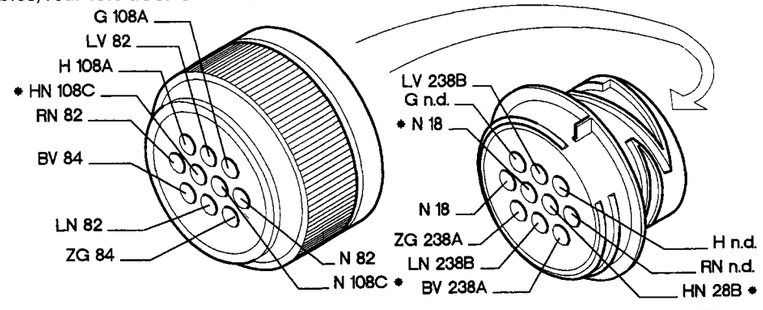

P4F056N01

* The cables involved in the wiring diagram are marked with an asterisk.

4F046N

Central door locking system

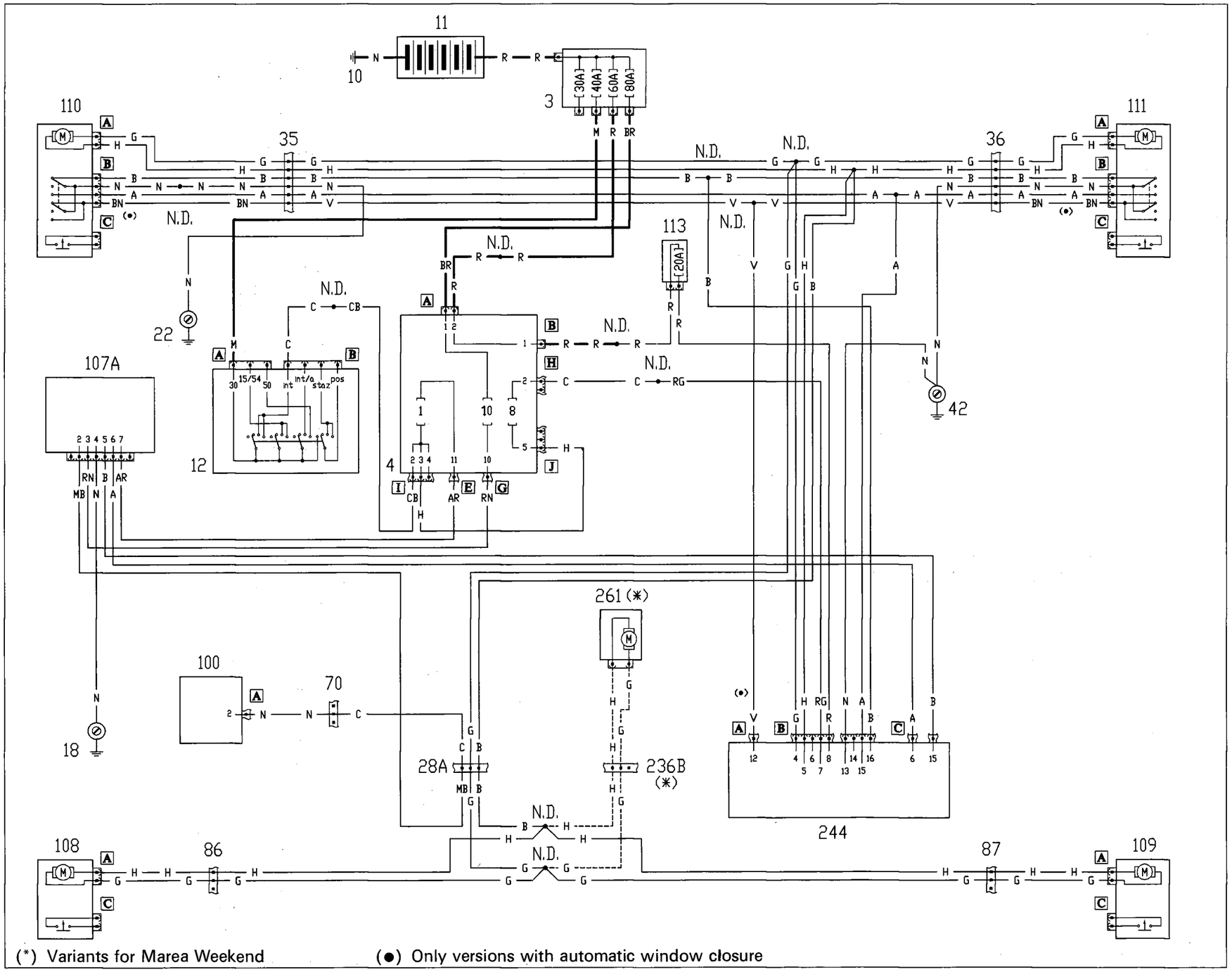

(*) Variants for Marea Weekend (●) Only versions with automatic window closure

P4F057N01

4F047N

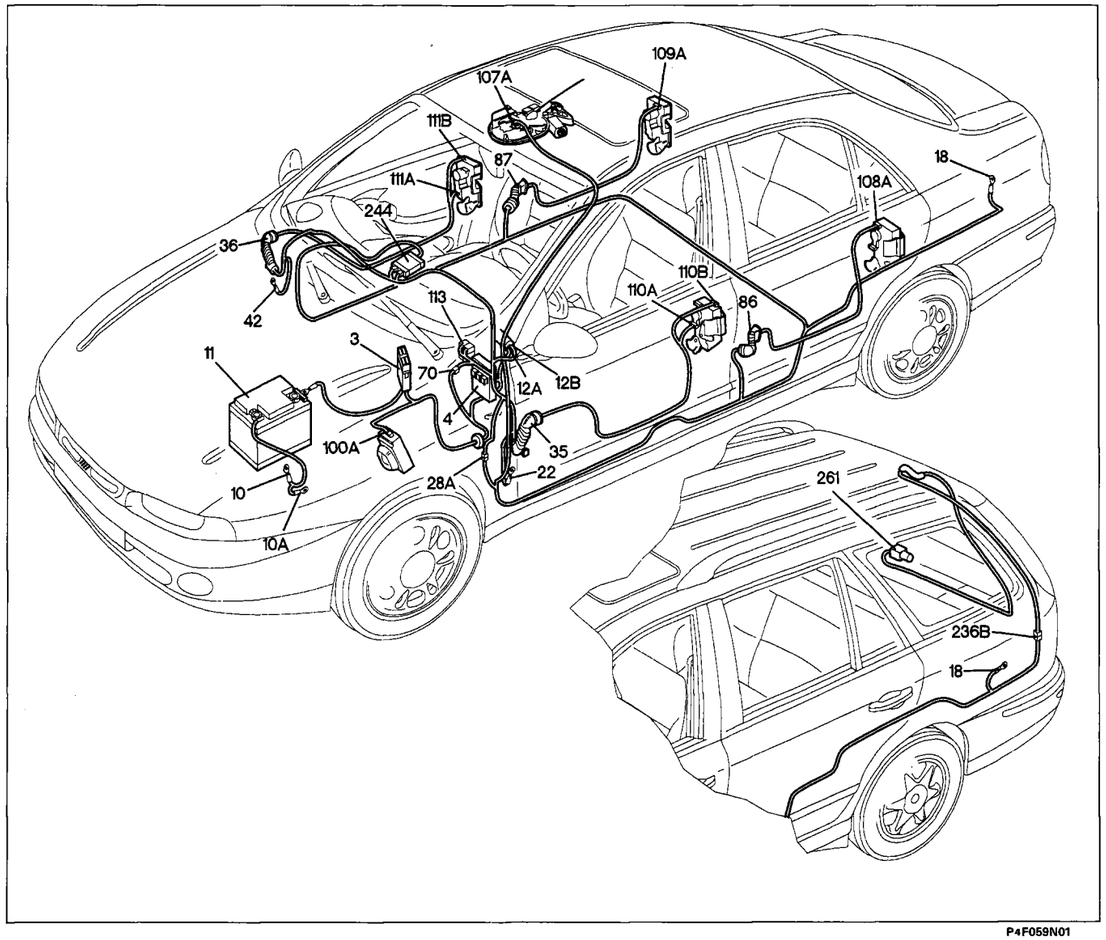

P4F059N01

Central door locking system

Key to components

3 Power fuse box
4 Fuse and relay unit
10 Battery earth on engine
10A Battery earth on body shell
11 Battery
12 Ignition switch
18 Rear left earth
22 Left dashboard earth
28 Dashboard/rear cables connection
35 Dashboard/front left door cables connection
36 Dashboard/front right door cables connection
42 Right dashboard earth
70 Dashboard/front cables connection
86 Rear cables/rear left door cables connection
87 Rear cables/rear right door cables connection
100 Alarm system electronic control unit
108 Rear left door locking system
109 Rear right door locking system
110 Front left door locking system
111 Front right door locking system
113 Central door locking system fuse
236 Rear cable/tailgate connection
244 Integrated services electronic control unit
261 Tailgate lock/release actuator

N.D. Ultrasound-soldered joint taped in wiring loom

4F048N

35 Dashboard/front left door cables connection

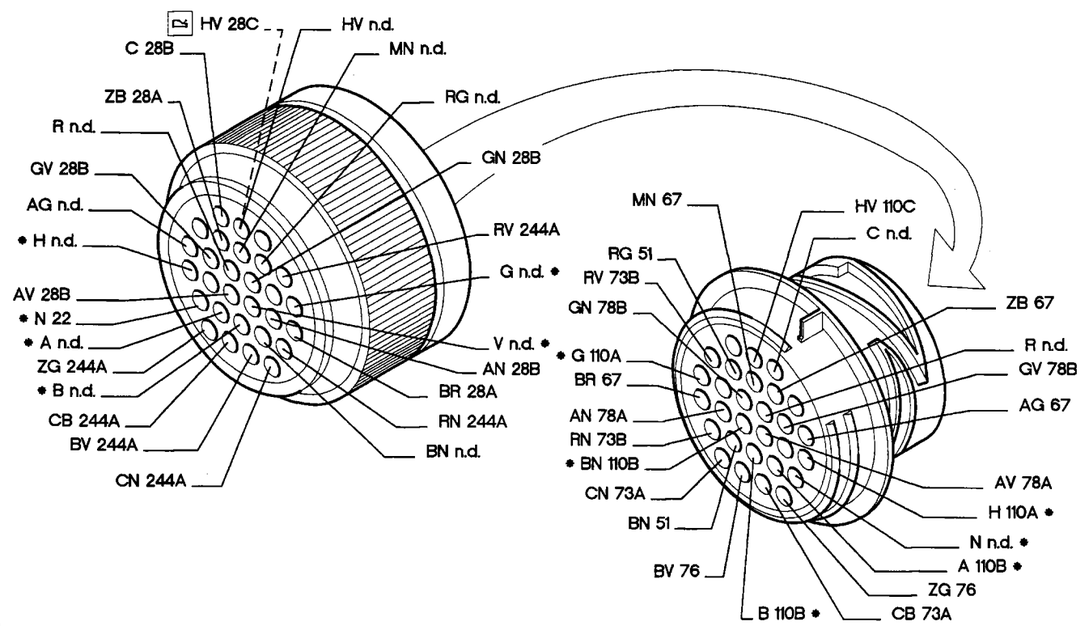

36 Dashboard/front right door cables connection

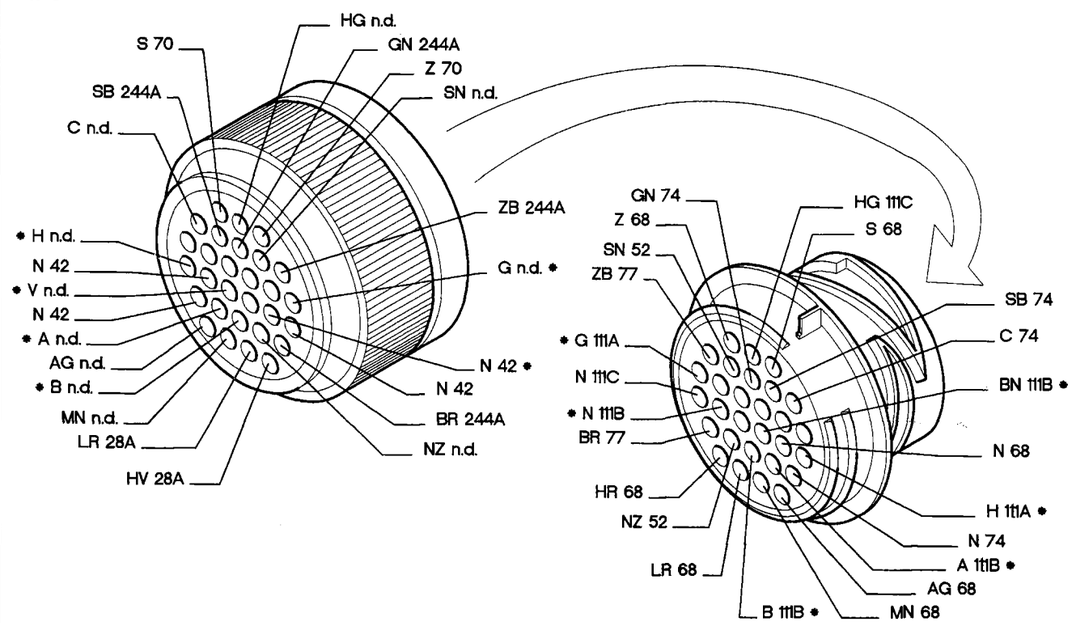

P4F060N01

* The cables involved in the wiring diagram are marked with an asterisk.

4F049N

Electrically-adjustable and heated external rearview mirrors

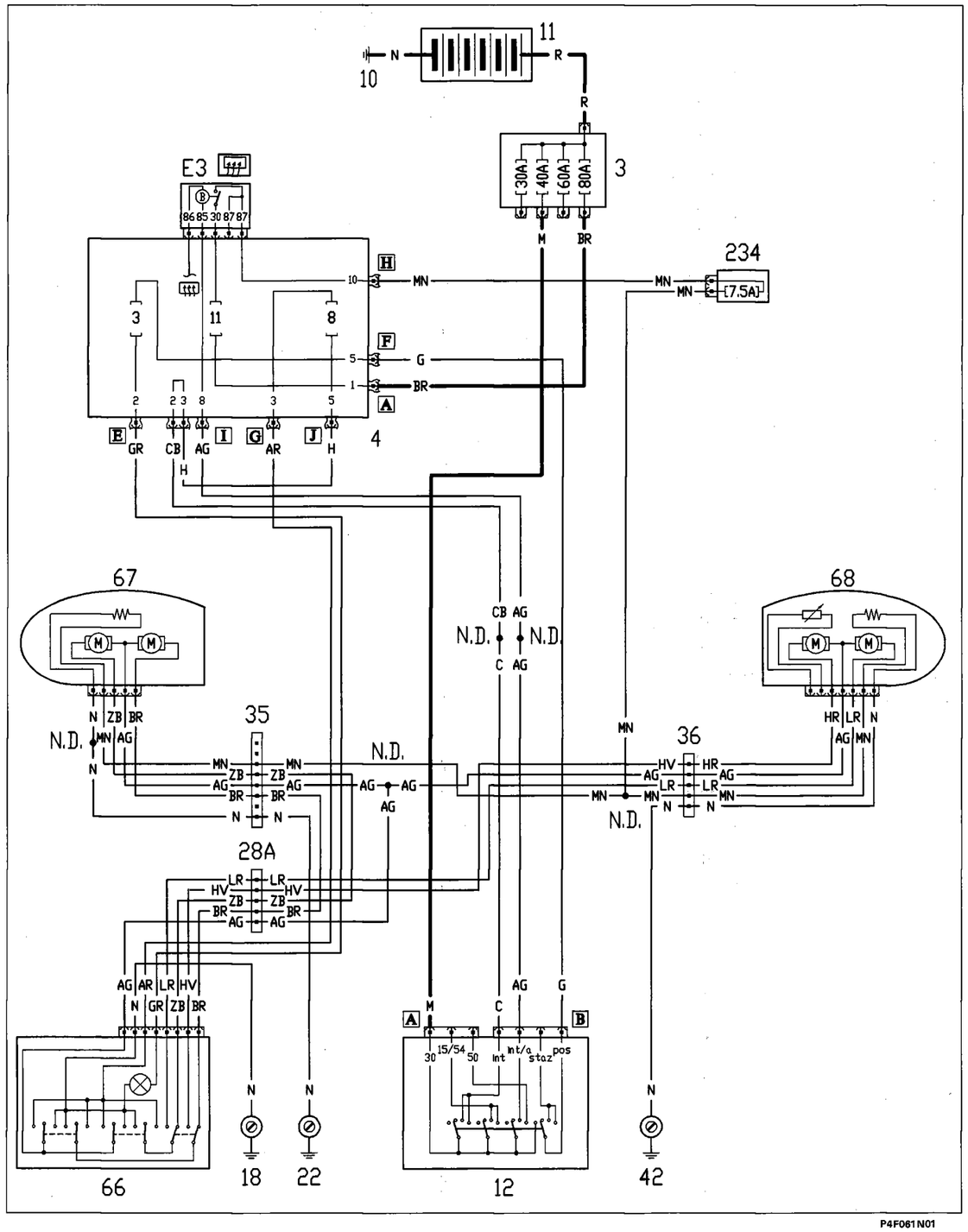

P4F061N01

4F050N

Location of components

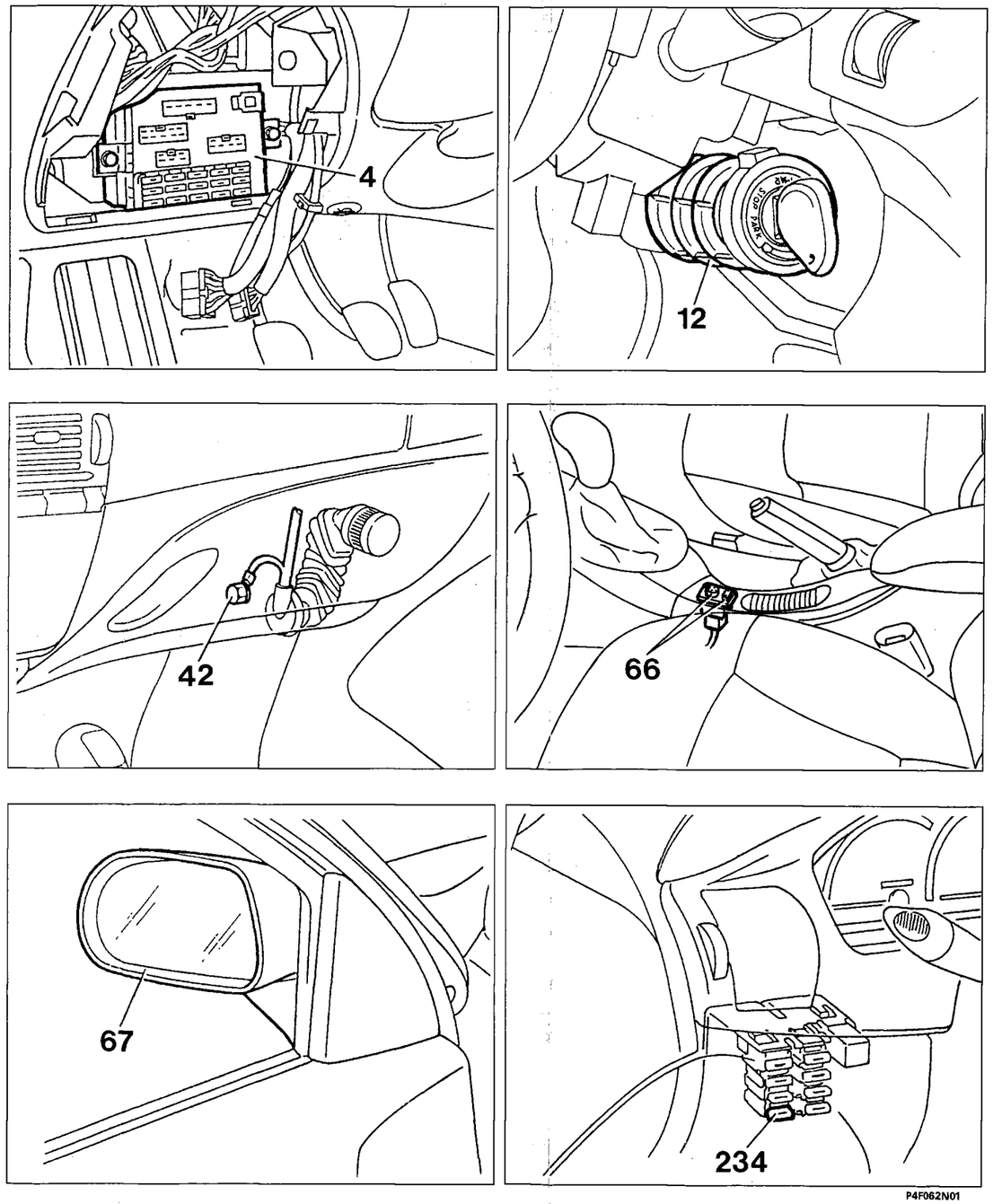

P4F062N01

4F051N

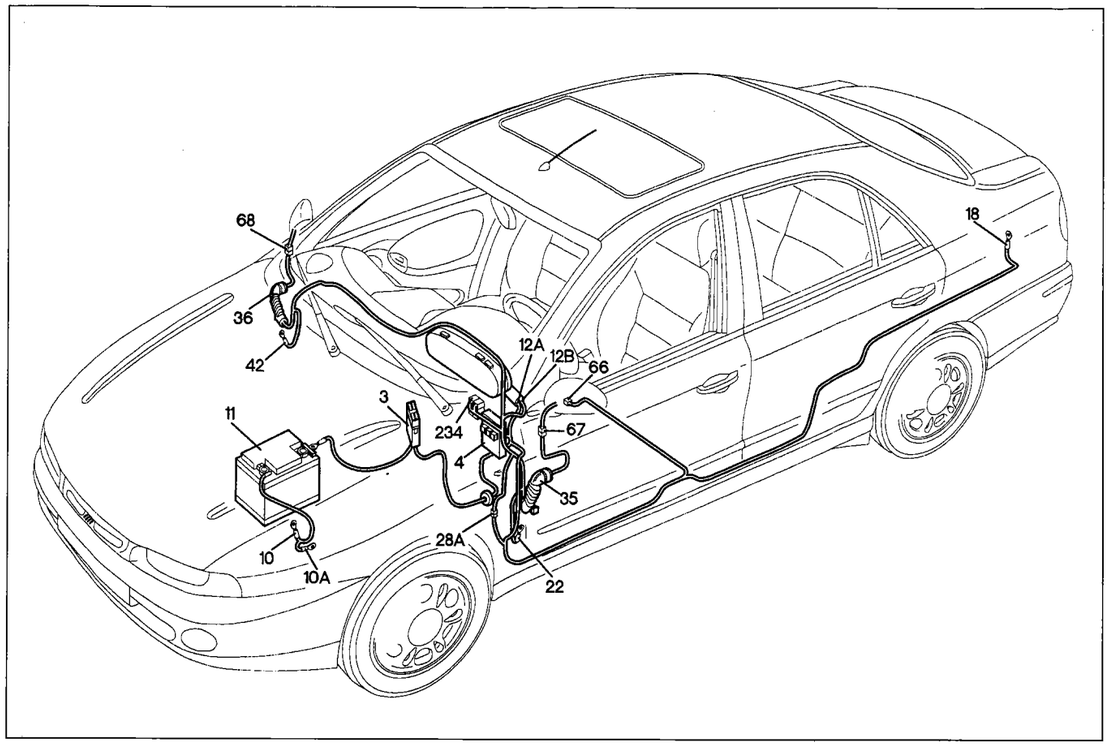

P4F063N01

Electrically-adjustable and heated external rearview mirrors

Key to components

3 Power fuse box
4 Fuse and relay unit
10 Battery earth on engine
10A Battery earth on body shell
11 Battery
12 Ignition switch
18 Rear left earth
22 Left dashboard earth
28 Dashboard/rear cables connection
35 Dashboard/front left door cables connection
36 Dashboard/front right door cables connection
42 Right dashboard earth
66 Pushbutton unit for electrically-adjustable external rearview mirrors
67 Left external rearview mirror
68 Right external rearview mirror
234 Fuse for external rearview mirror defrosting

N.D. Ultrasound-soldered joint taped in wiring loom

4F052N

35 Dashboard/front left door cables connection

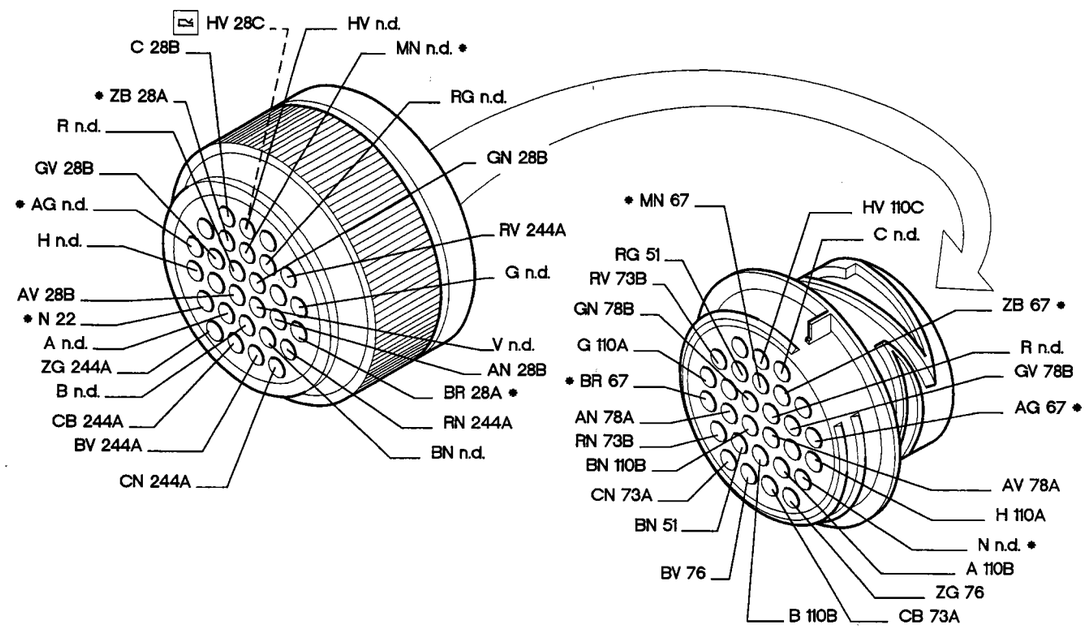

36 Dashboard/front right door cables connection

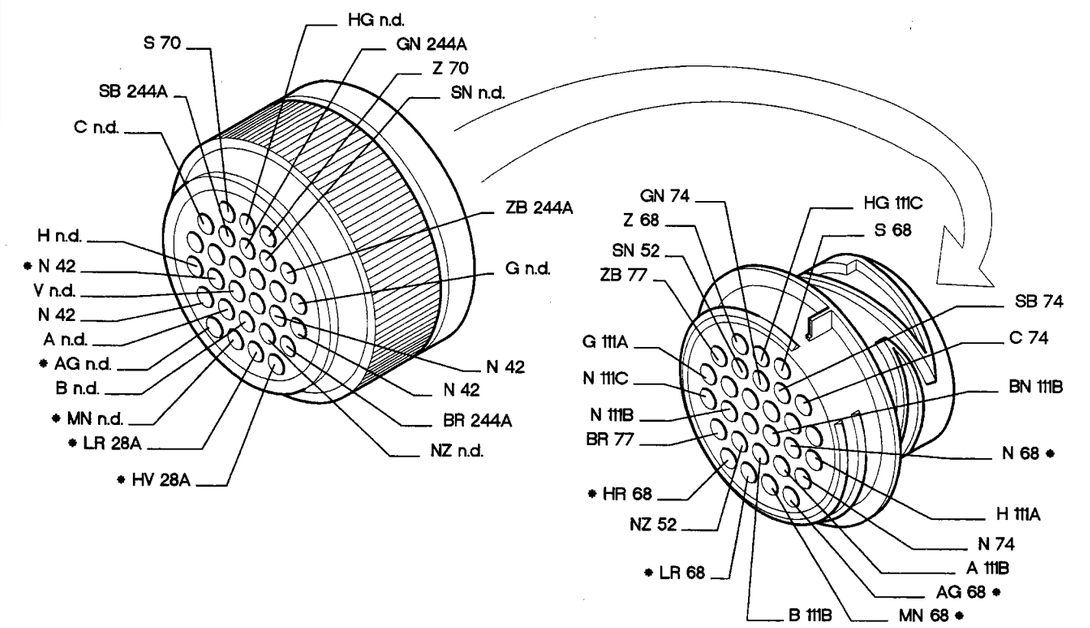

P4F064N01

* The cables involved in the wiring diagram are marked with an asterisk.

4F053N

Electric sunroof

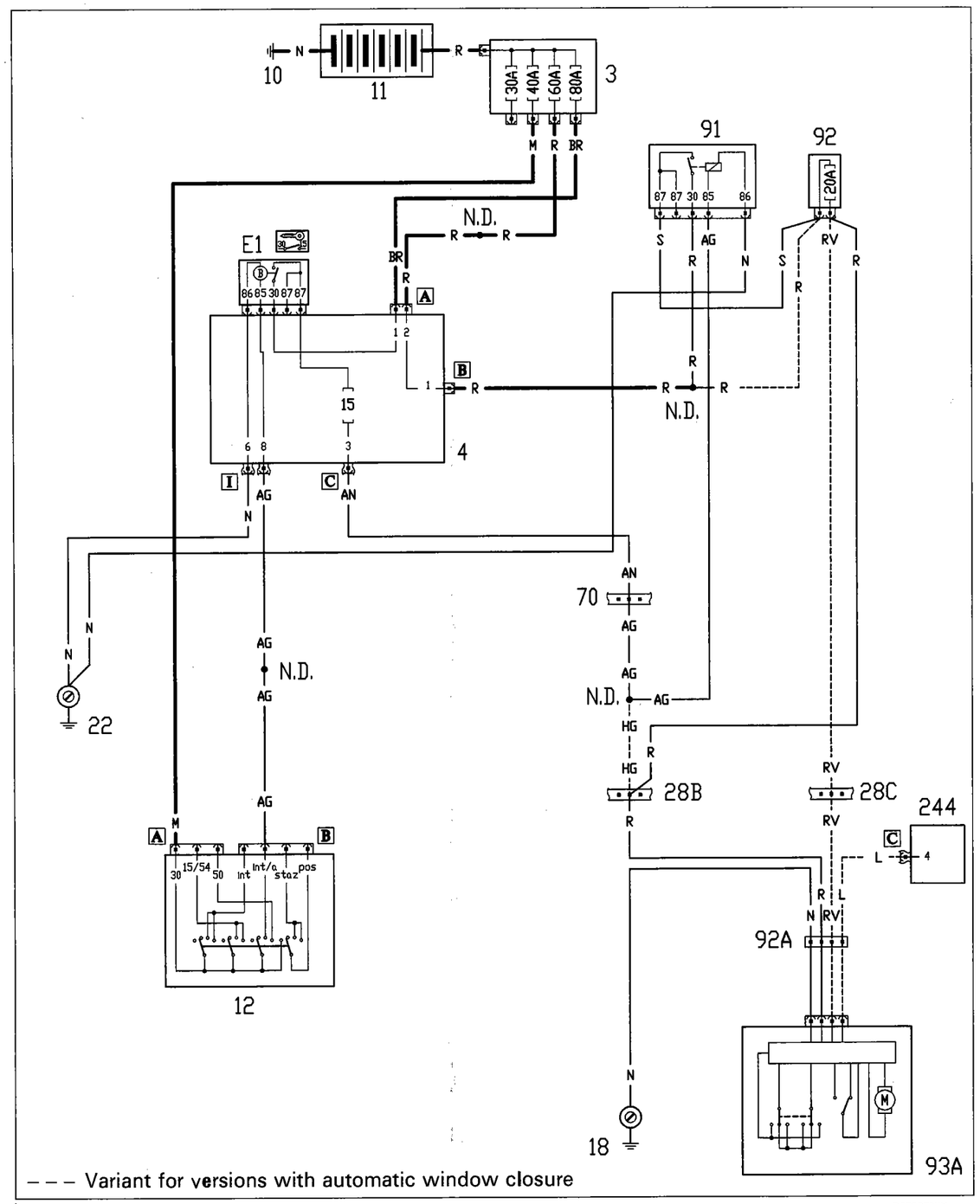

P4F065N01

4F054N

Location of components

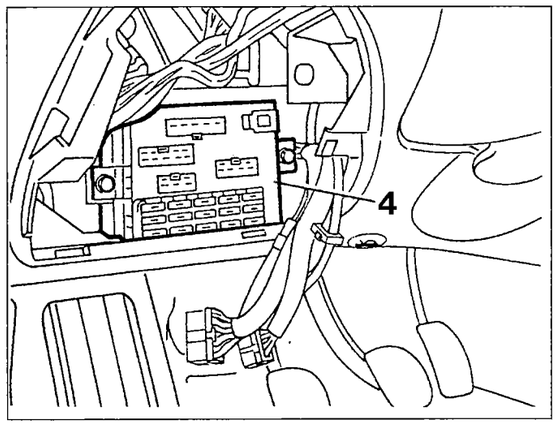

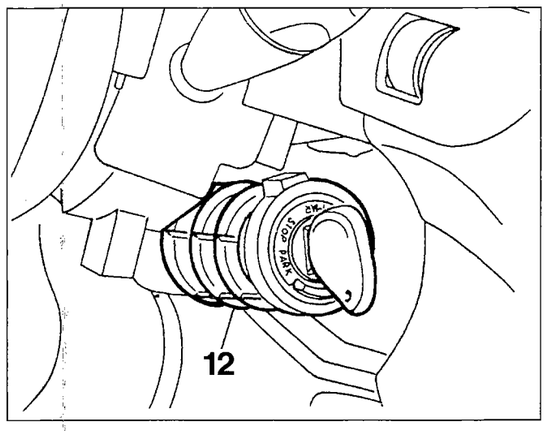

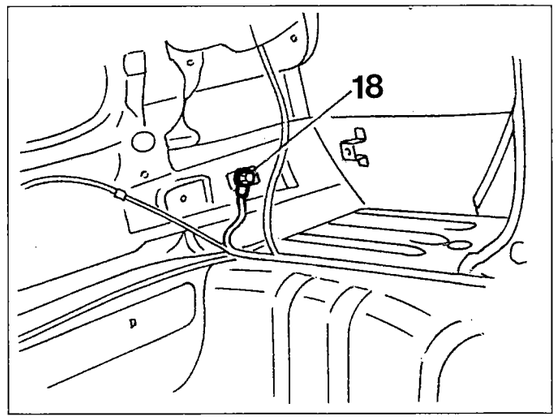

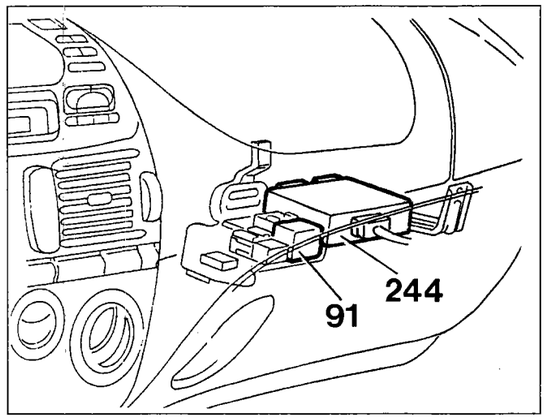

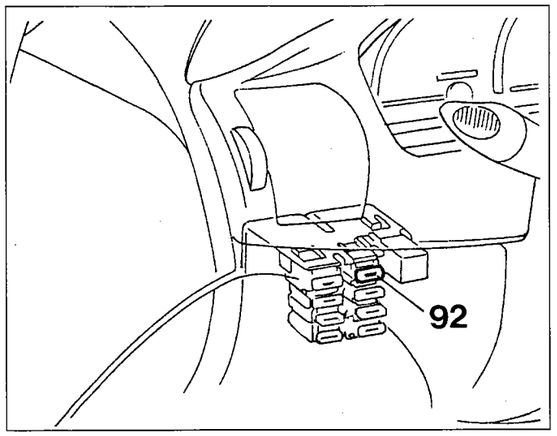

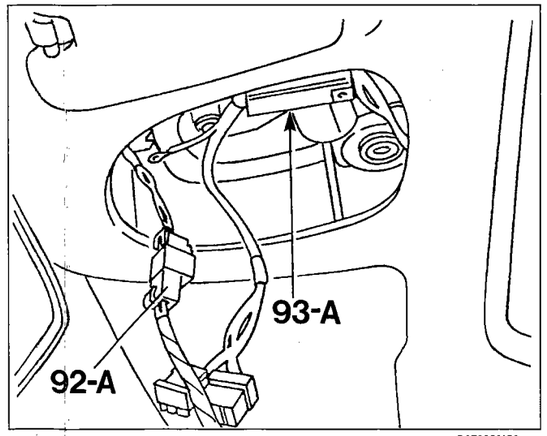

P4F066N01

4F055N

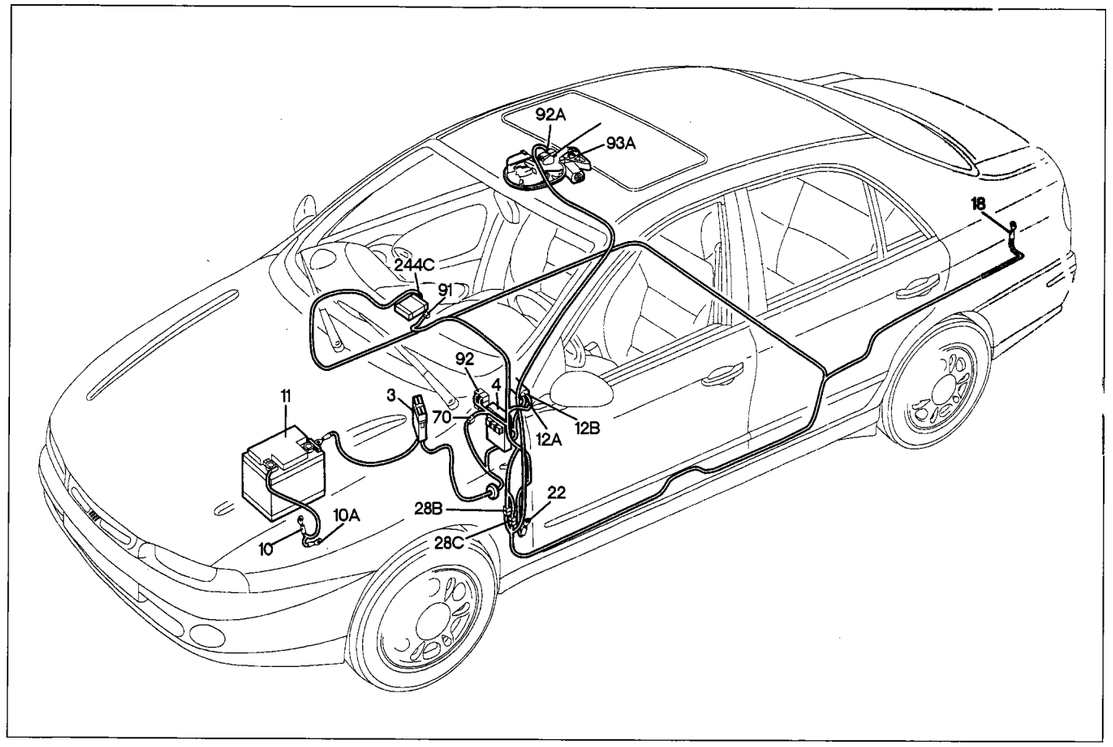

P4F067N01

Electric sunroof

Key to components

3 Power fuse box
4 Fuse and relay unit
10 Battery earth on engine
10A Battery earth on body shell
11 Battery
12 Ignition switch
18 Rear left earth
22 Left dashboard earth
28 Dashboard/rear cables connection
70 Dashboard/front cables connection
91 Key-dependent power relay
92 Electric sunroof relay
92A Electric sunroof cables connection
93A Electric sunroof control unit
244 Integrated services electronic control unit
N.D. Ultrasound-soldered joint taped in wiring loom

4C Fuse and relay unit

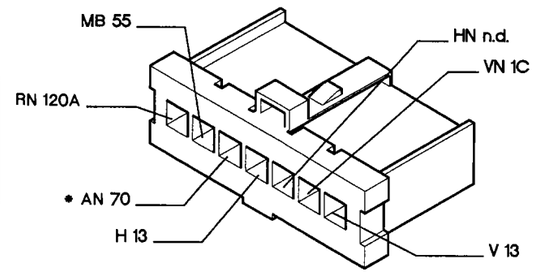

28C Dashboard/rear cables connection

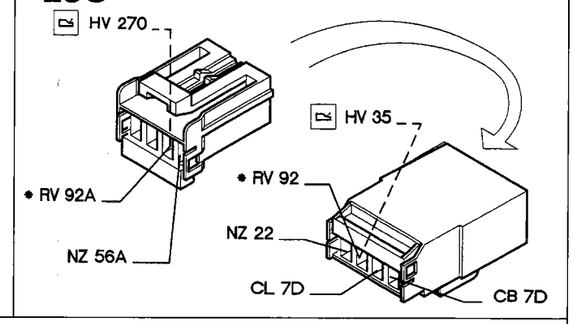

28B Dashboard/rear cables connection

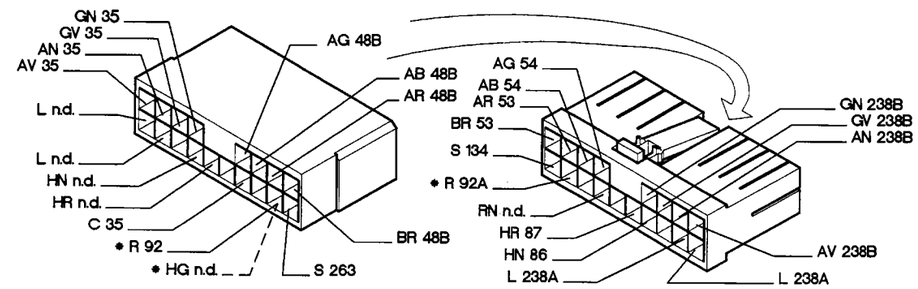

70 Dashboard/front cables connection

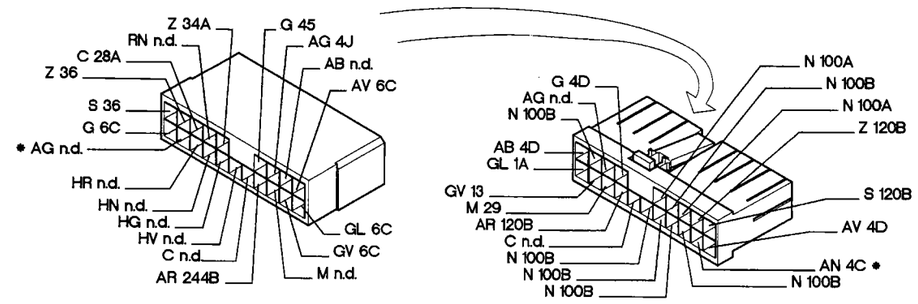

91 Key-dependent power relay

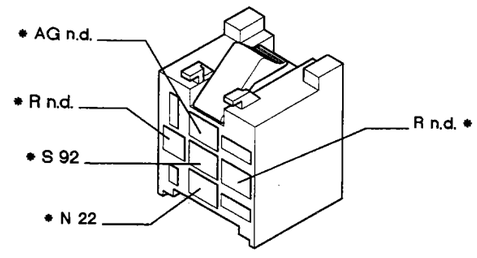

92 Electric sunroof relay

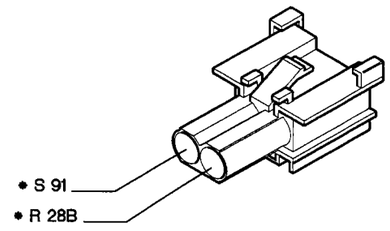

P4F068N01

* The cables involved in the wiring diagram are marked with an asterisk.

4F056N

4F057N

Headlamp adjuster

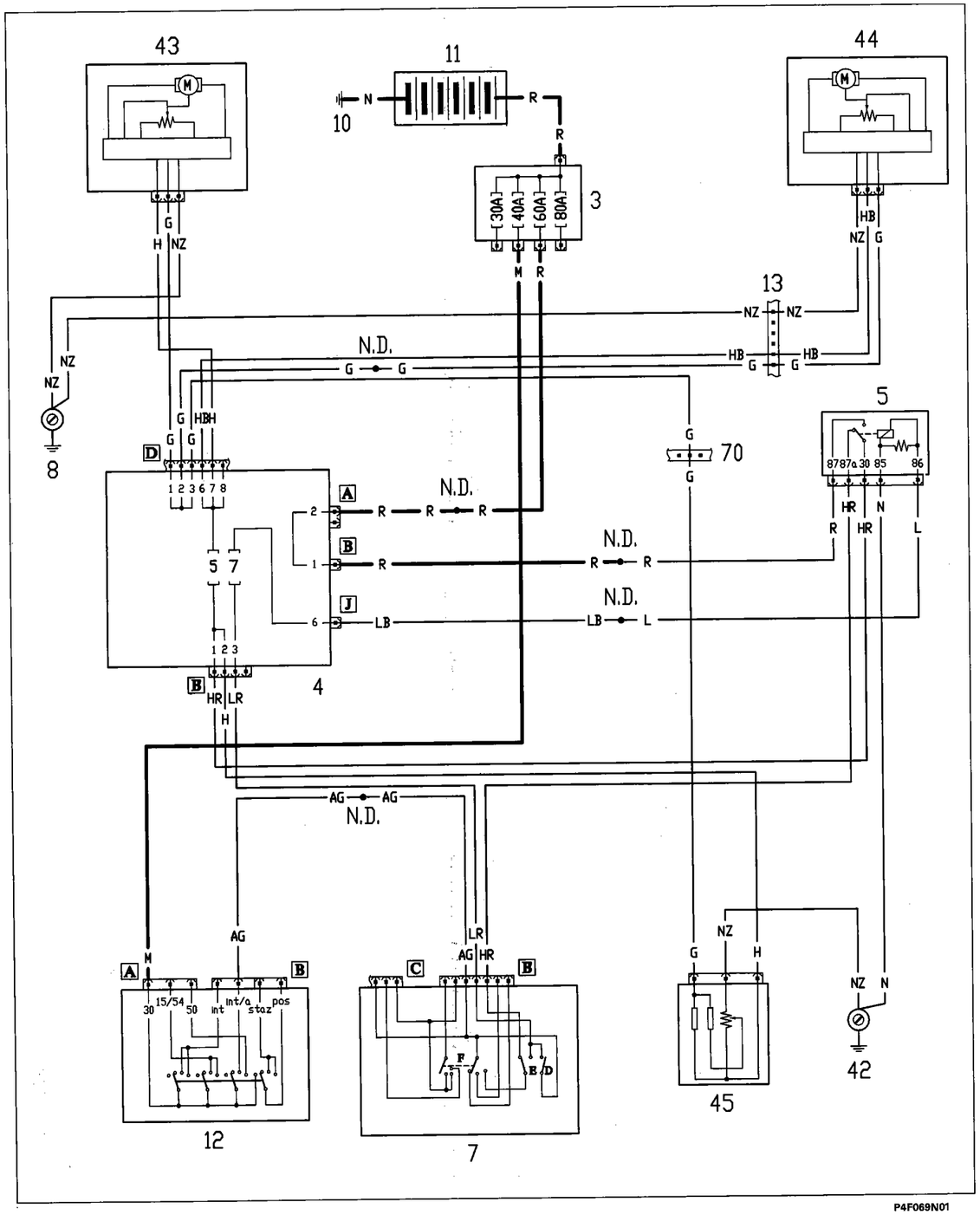

4F058N

Location of components

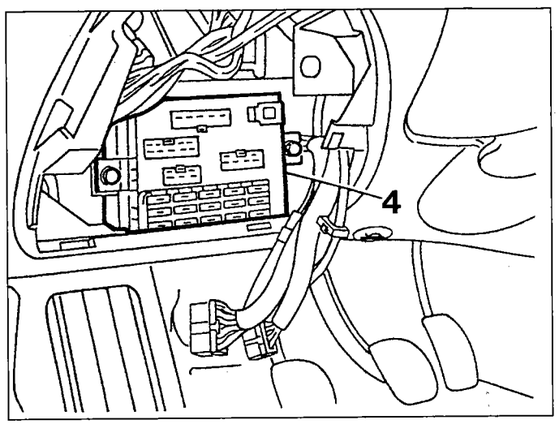

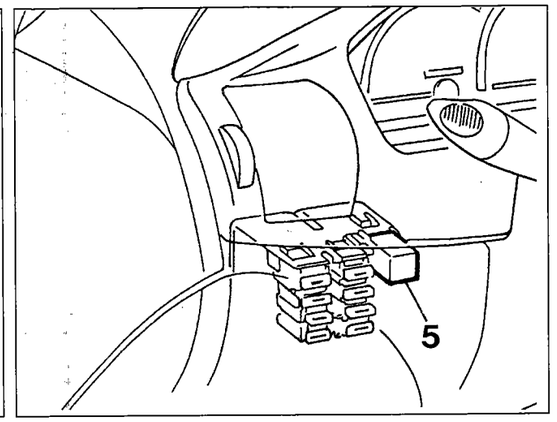

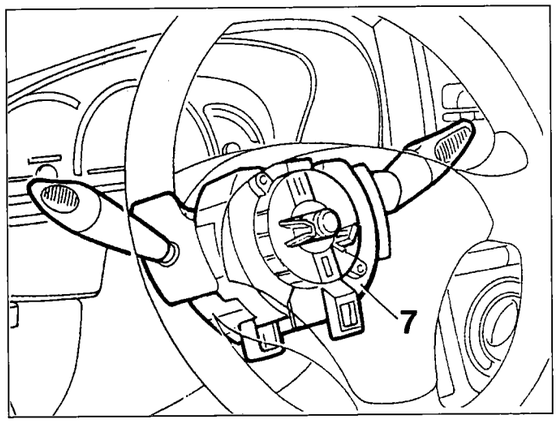

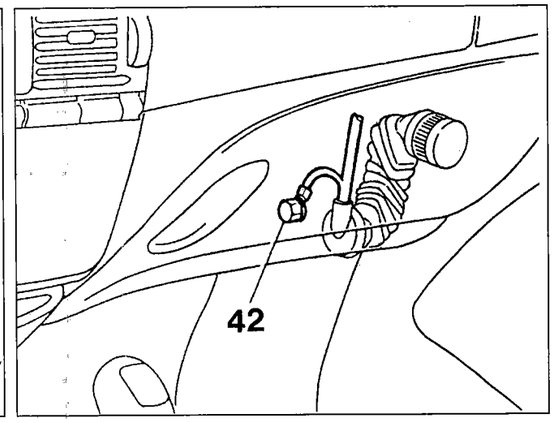

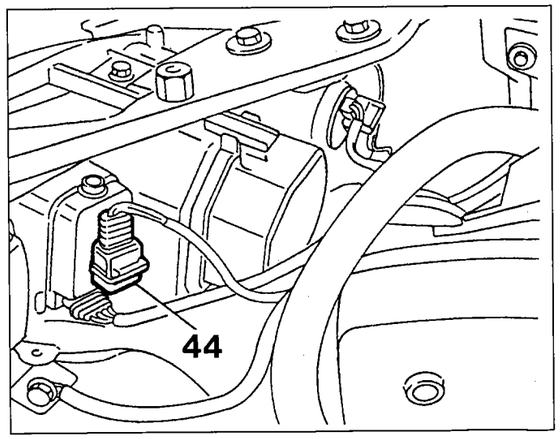

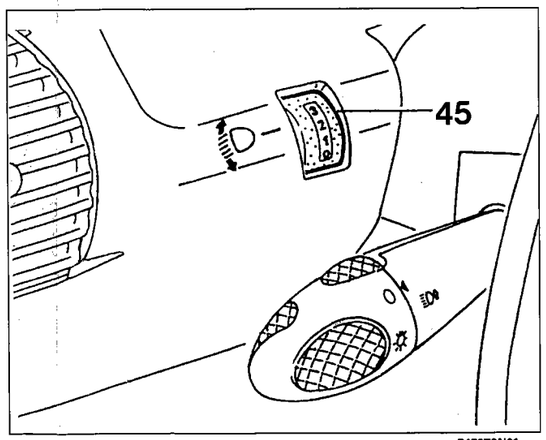

P4F070N01

4F059N

Copyright Fiat Auto

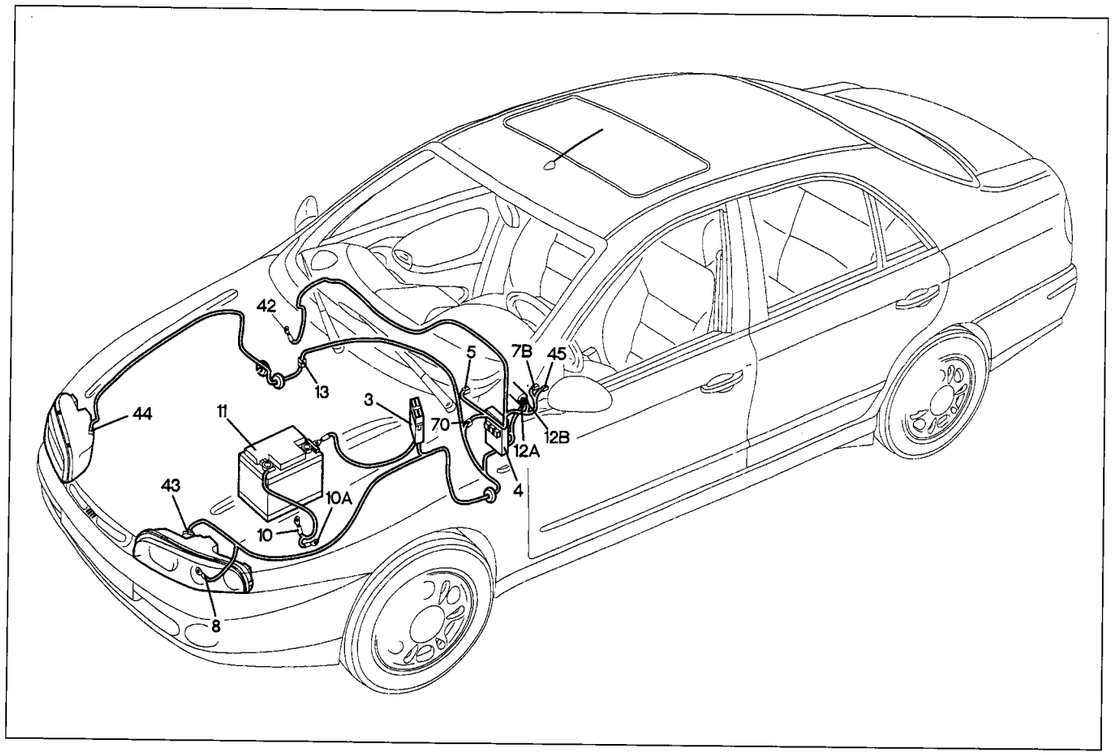

P4F071N01

Headlamp adjuster

Key to components

3 Power fuse box
4 Fuse and relay unit
5 Dipped beam relay
7 Stalk unit
8 Front left earth
10 Battery earth on engine
10A Battery earth on body shell
11 Battery
12 Ignition switch
13 Front right/left cables connection
42 Right dashboard earth
43 Electric actuator for adjusting left headlamp
44 Electric actuator for adjusting right headlamp
45 Headlamp adjustment unit

70 Dashboard/front cables connection
N.D. Ultrasound-soldered joint taped in wiring loom

4F060N

4D Fuse and relay unit

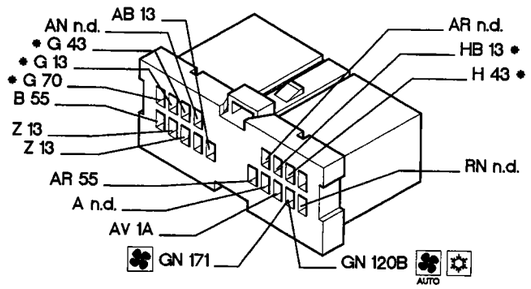

4F Fuse and relay unit

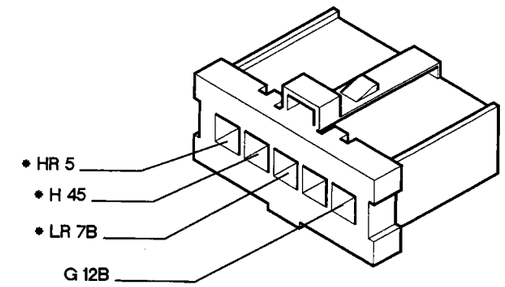

4J Fuse and relay unit

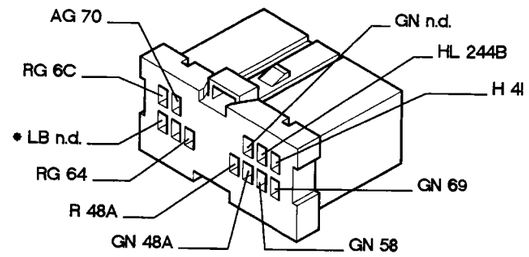

5 Dipped beam relay

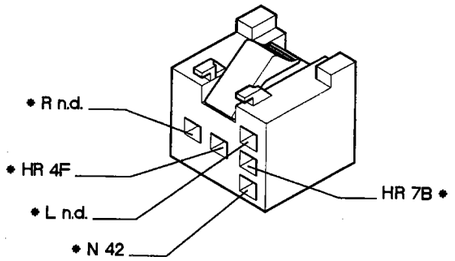

13 Front right/left cables connection

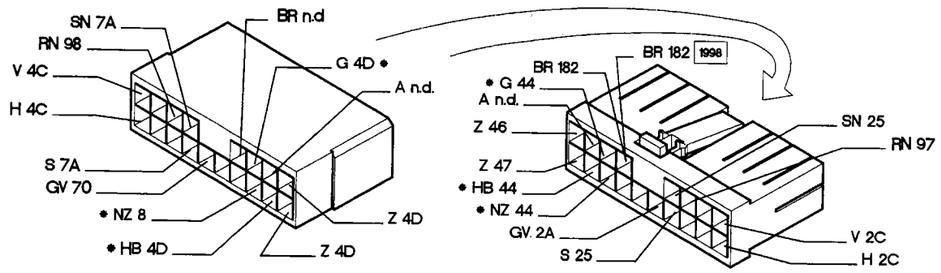

43 Electric actuator for left headlamp adjustment

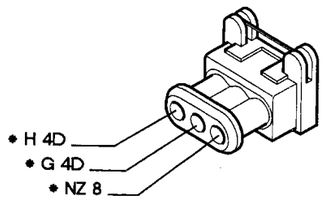

45 Headlamp adjustment control unit

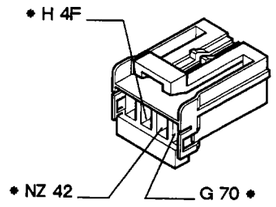

* The cables involved in the wiring diagram are marked with an asterisk.

P4F072N01

4F061N

Heated front seats

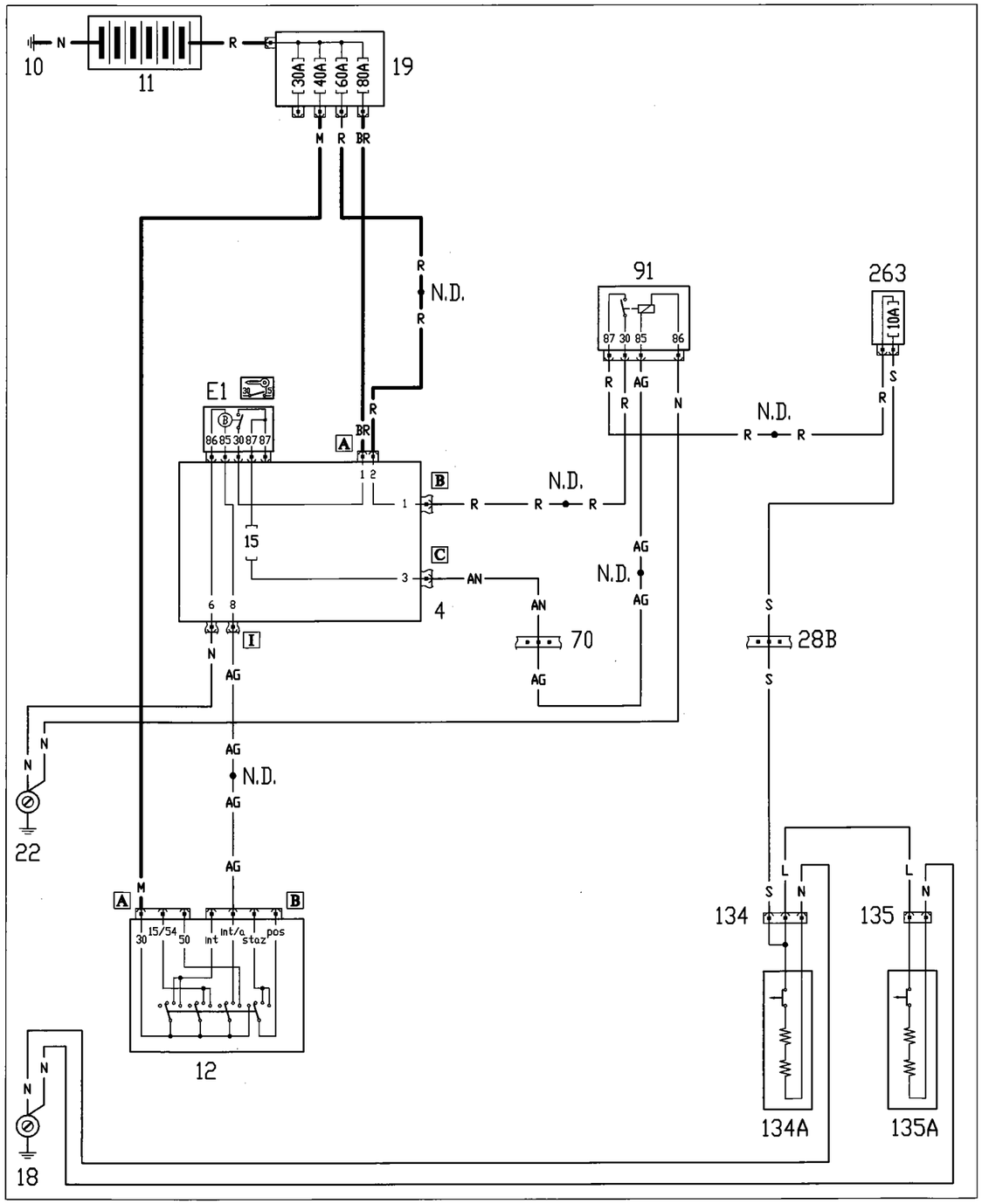

P4F073N01

4F062N

Heated front seats

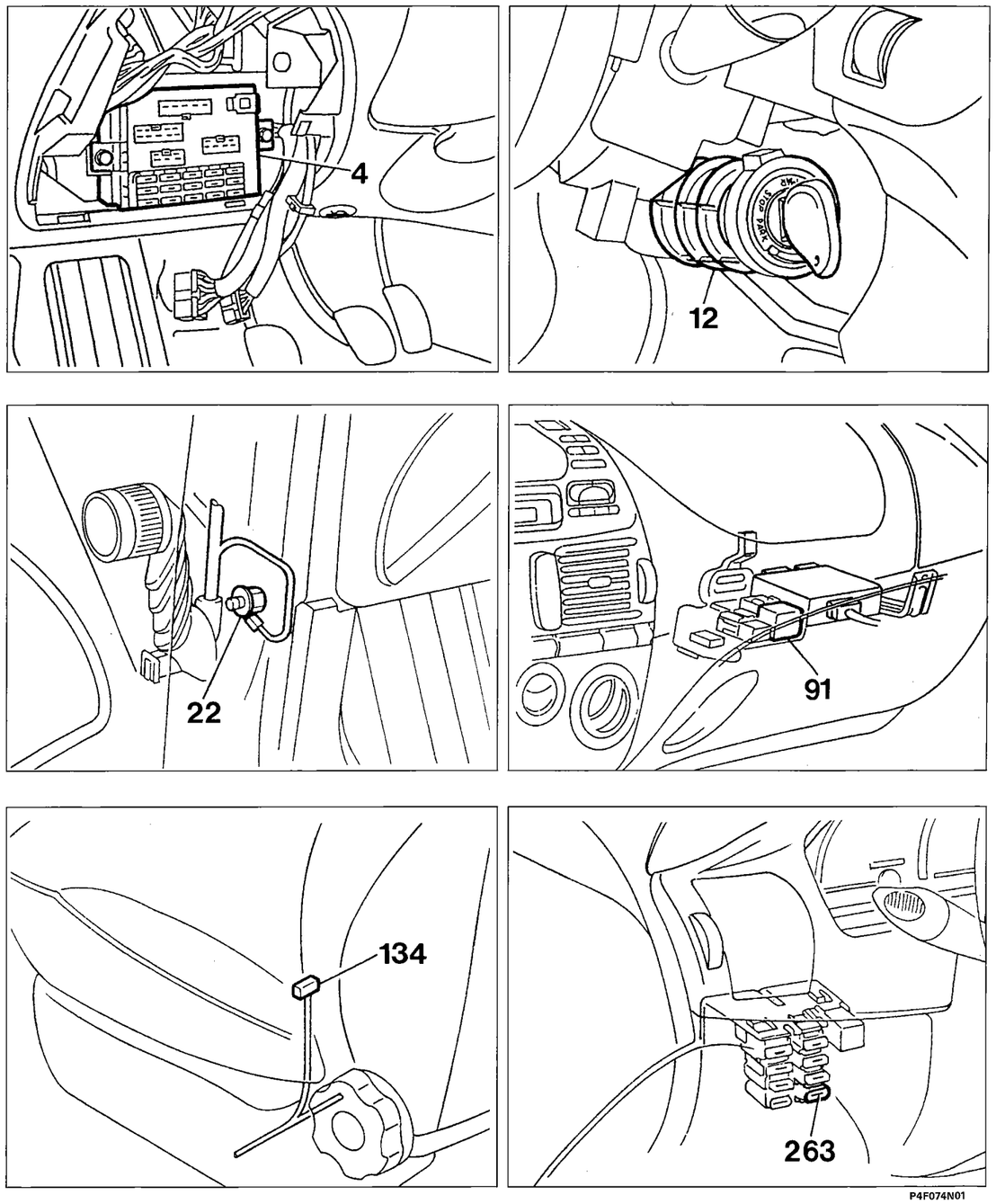

P4F074N01

4F063N

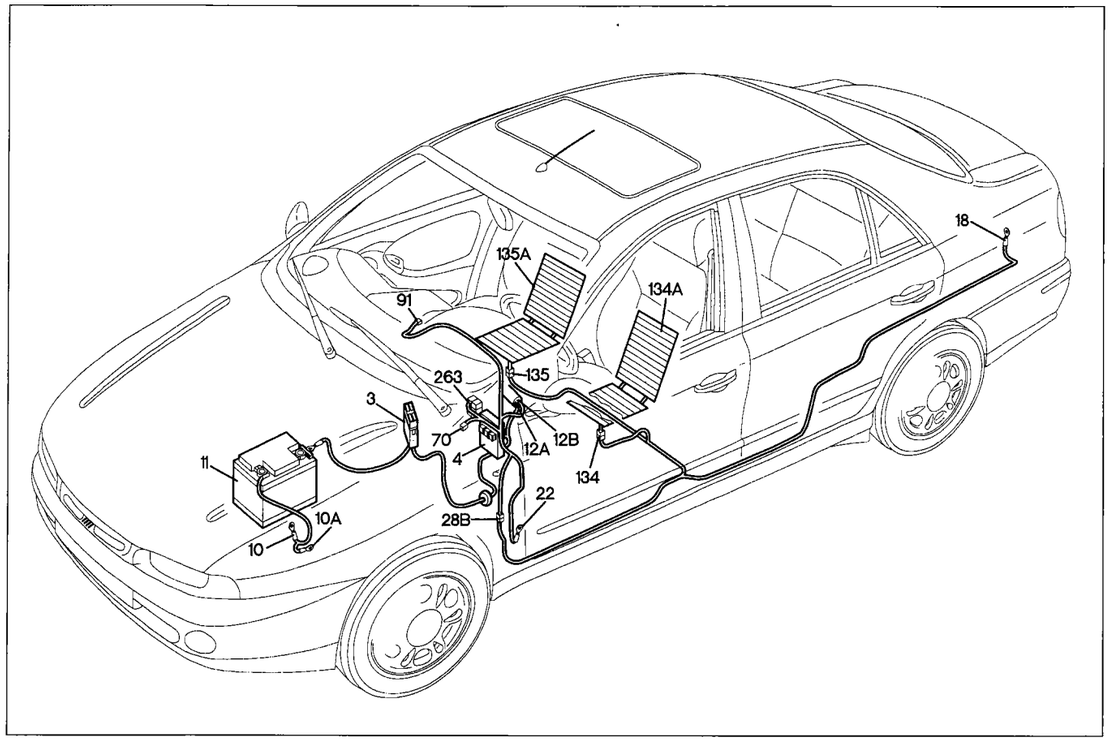

P4F075N01

Heated front seats

Key to components

3 Power fuse box:
4 Fuse and relay unit
10 Battery earth on engine
10A Battery earth on body shell
11 Battery
12 Ignition switch
18 Rear left earth
22 Left dashboard earth
28 Dash./longitudinal cables connection
70 Dash./front cables connection
91 Power relay
134 Rear cables/driver's heated seat cables connection
134A Driver's seat heating pad
135 Rear cables/passenger's heated seat cables connection
135A Passenger's seat heating pad

263 10A fuse protecting heated seats

N.D. Ultrasound-soldered joint taped in wiring loom

4F064N

28B Dash./rear cables connection

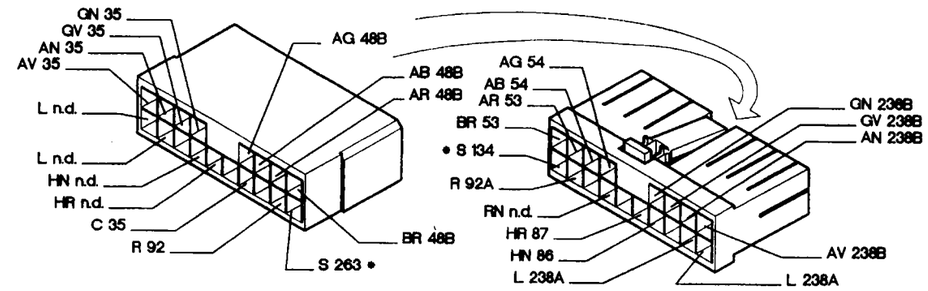

70 Dash./front cables connection

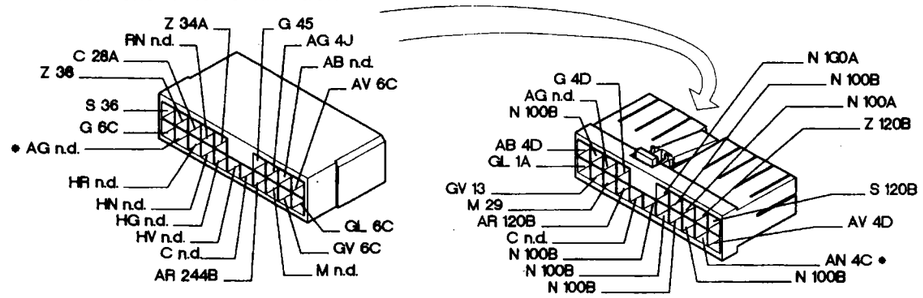

91 Key-dependent power relay

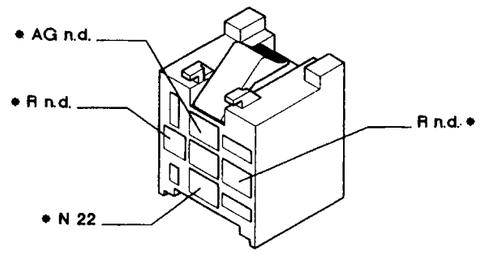

134 Rear cables/driver's heated seat cables connection

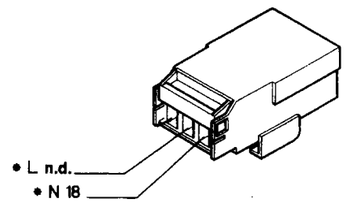

135 Rear cables/passenger's heated seat cables connection

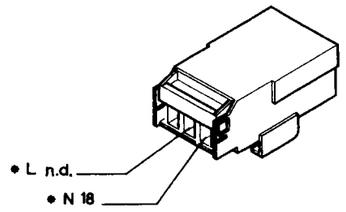

263 Heated seat fuse

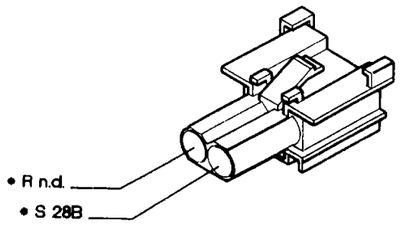

P4F

* The cables involved in the wiring diagram are marked with an asterisk.

4F065N

Air Bag and pretensioners and fault warning light

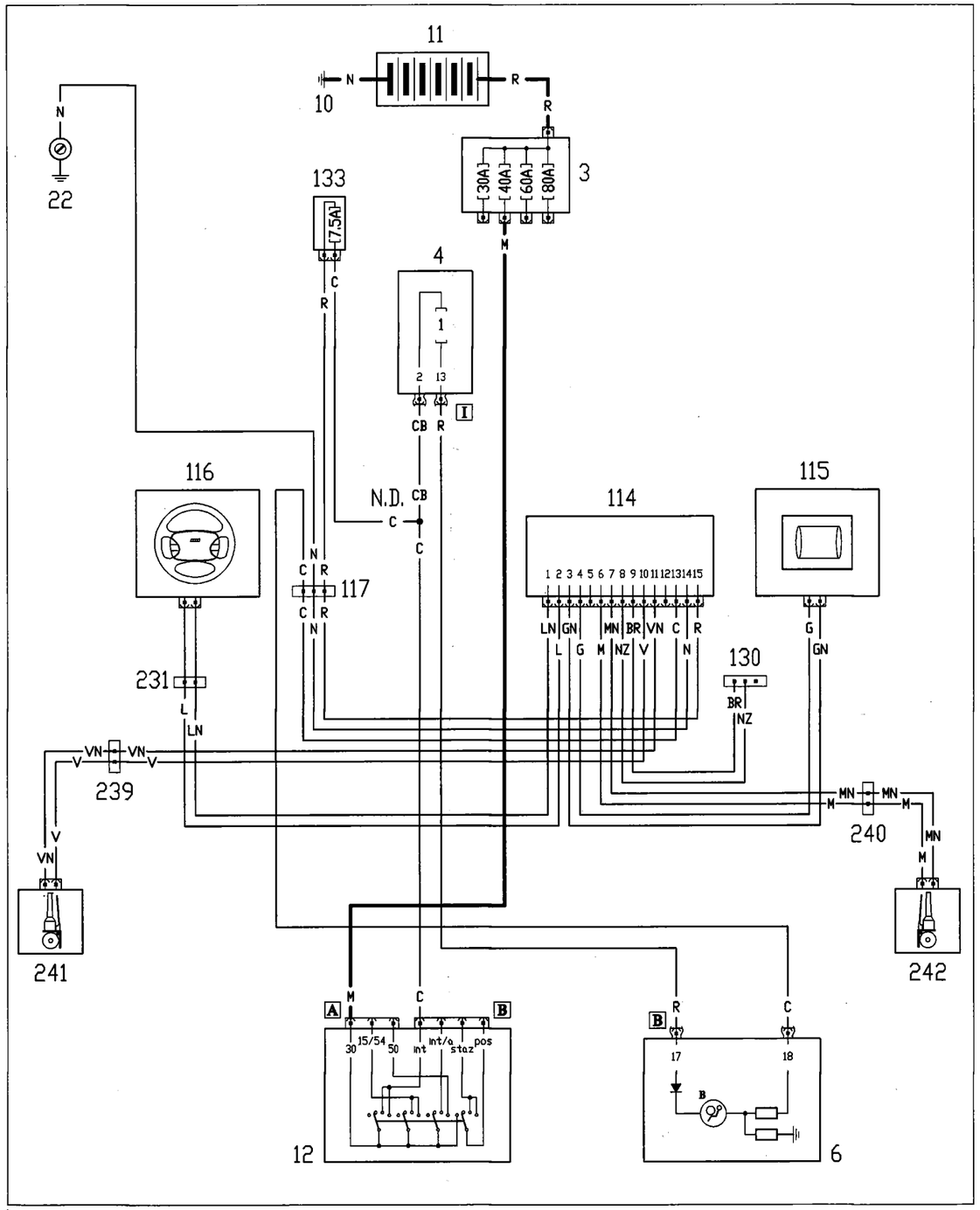

P4F077N01

4F066N

Location of components

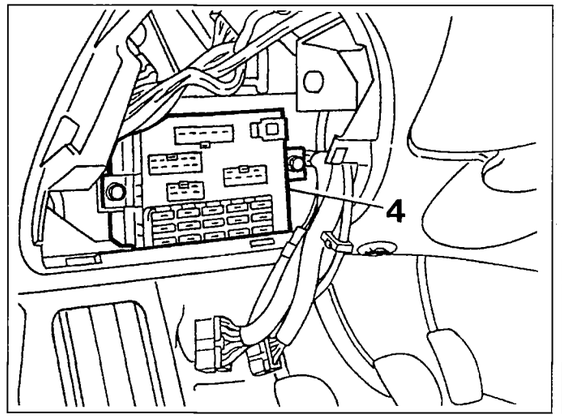

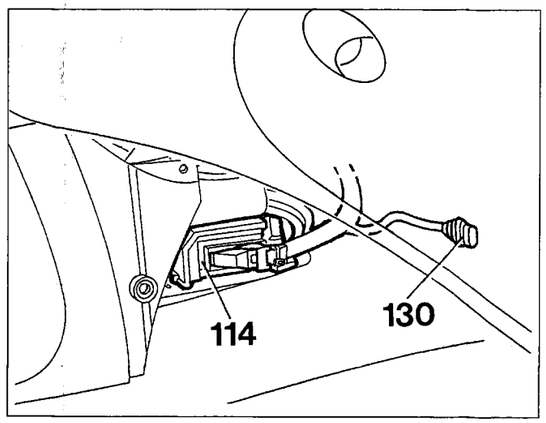

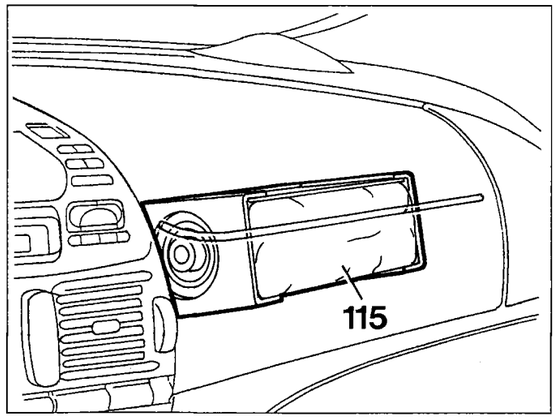

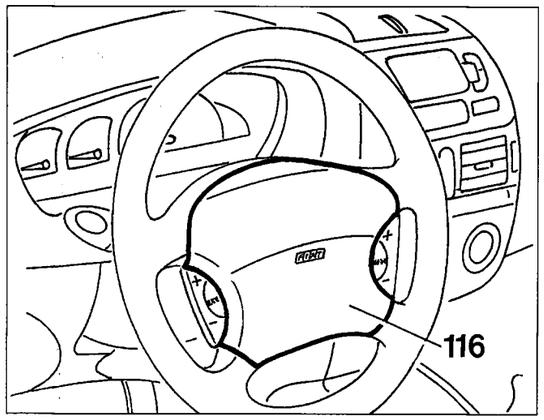

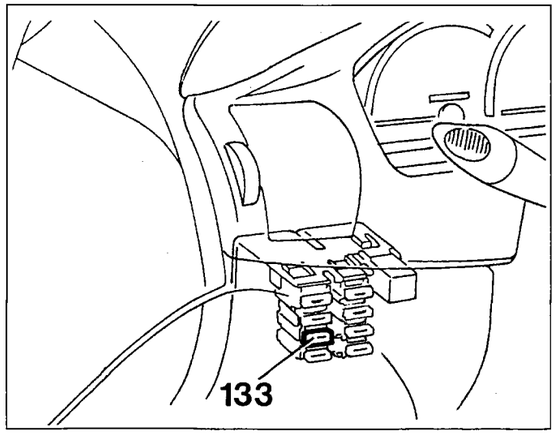

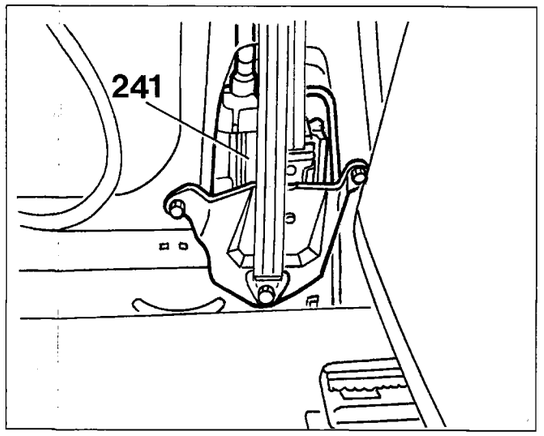

P4F078N01

4F067N

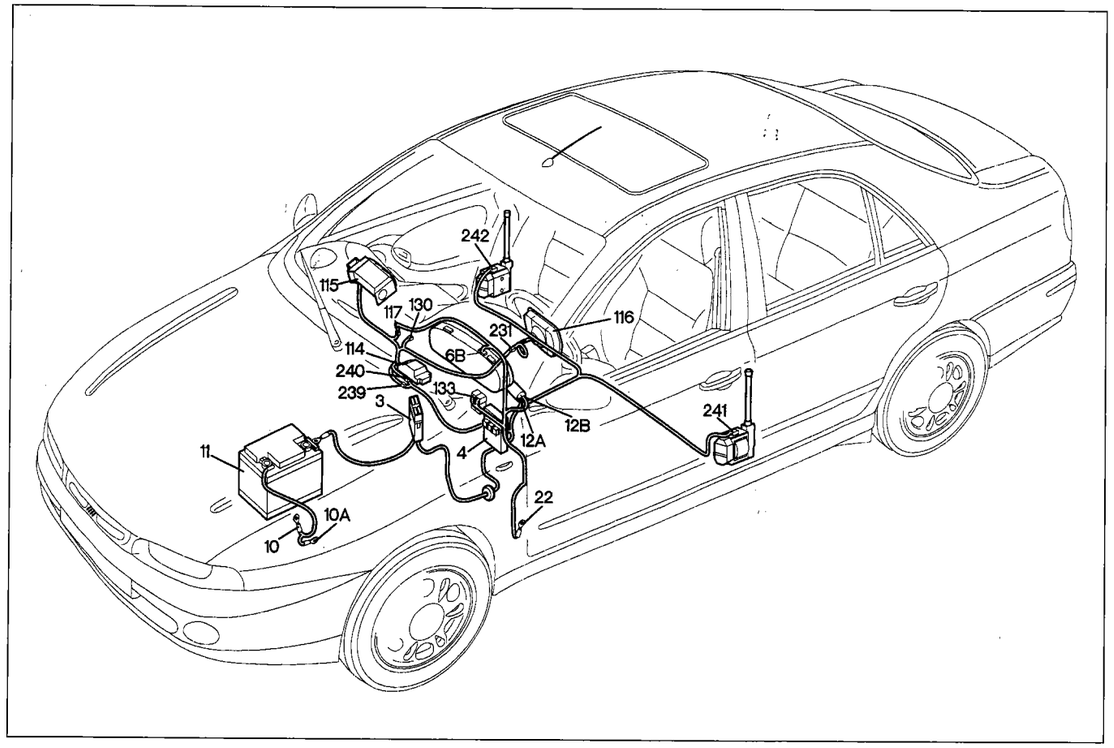

P4F079N01

Air Bag and pretensioners and warning light

Key to components

3 Power fuse box
4 Fuse and relay unit
10 Battery earth on engine
10A Battery earth on body shell
11 Battery
12 Ignition switch
22 Left dashboard earth
114 Air Bag electronic control unit
115 Passenger's Air Bag
116 Driver's Air Bag
117 Air Bag/dashboard cables connection
130 Diagnostic socket for Air Bag device
133 Air Bag fuse
231 Clock spring connection
239 Air Bag/left pretensioner cable connections
240 Air Bag/right pretensioner cable connections
241 Left pretensioner
242 Right pretensioner
N.D. Ultrasound-soldered joint taped in wiring loom

4F068N

114 Air Bag electronic control unit

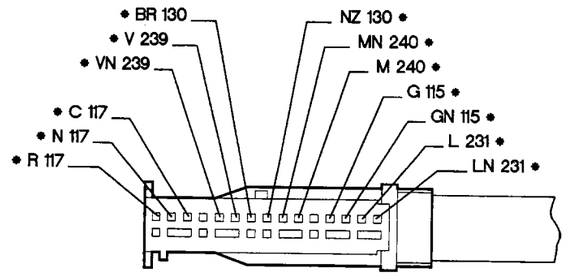

115 Passenger's Air Bag

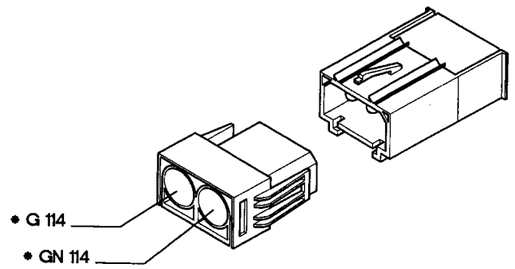

117 Air Bag/dashboard cables connection

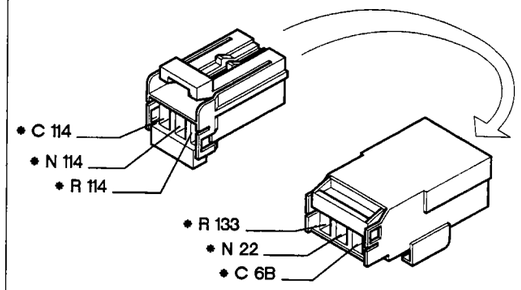

130 Diagnostic socket for Air Bag system

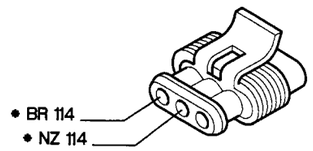

133 Air Bag system fuse

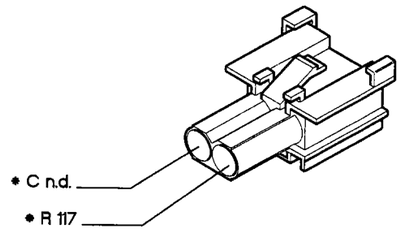

231 Clock spring connection

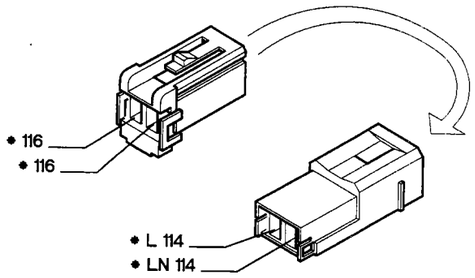

239 Air Bag/left pretensioner cable connection

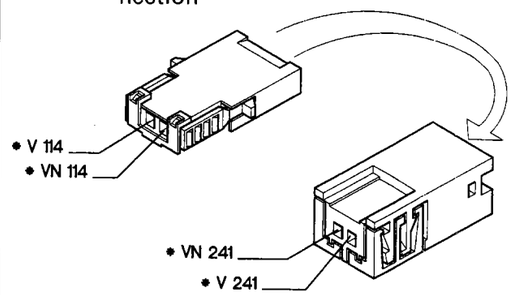

* The cables involved in the wiring diagram are marked with an asterisk.

P4F080N01

4F069N

Windscreen wash/wipe - Rear window wash/wipe - Electric horns - Heated rear window - Headlamp washer

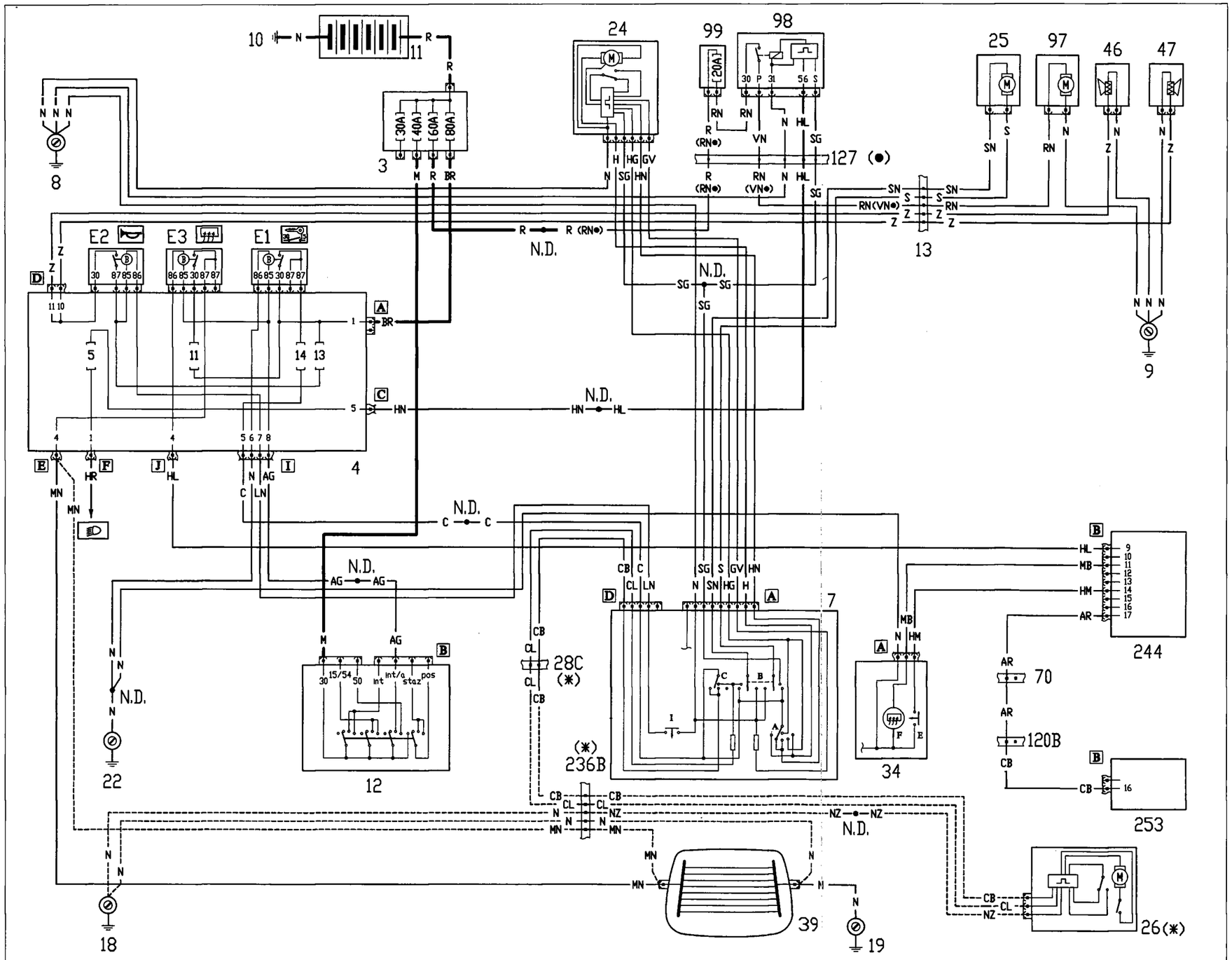

(*) Variants for Marea Weekend (●) Only for TD versions with air conditioner

P4F081N02

4F070N

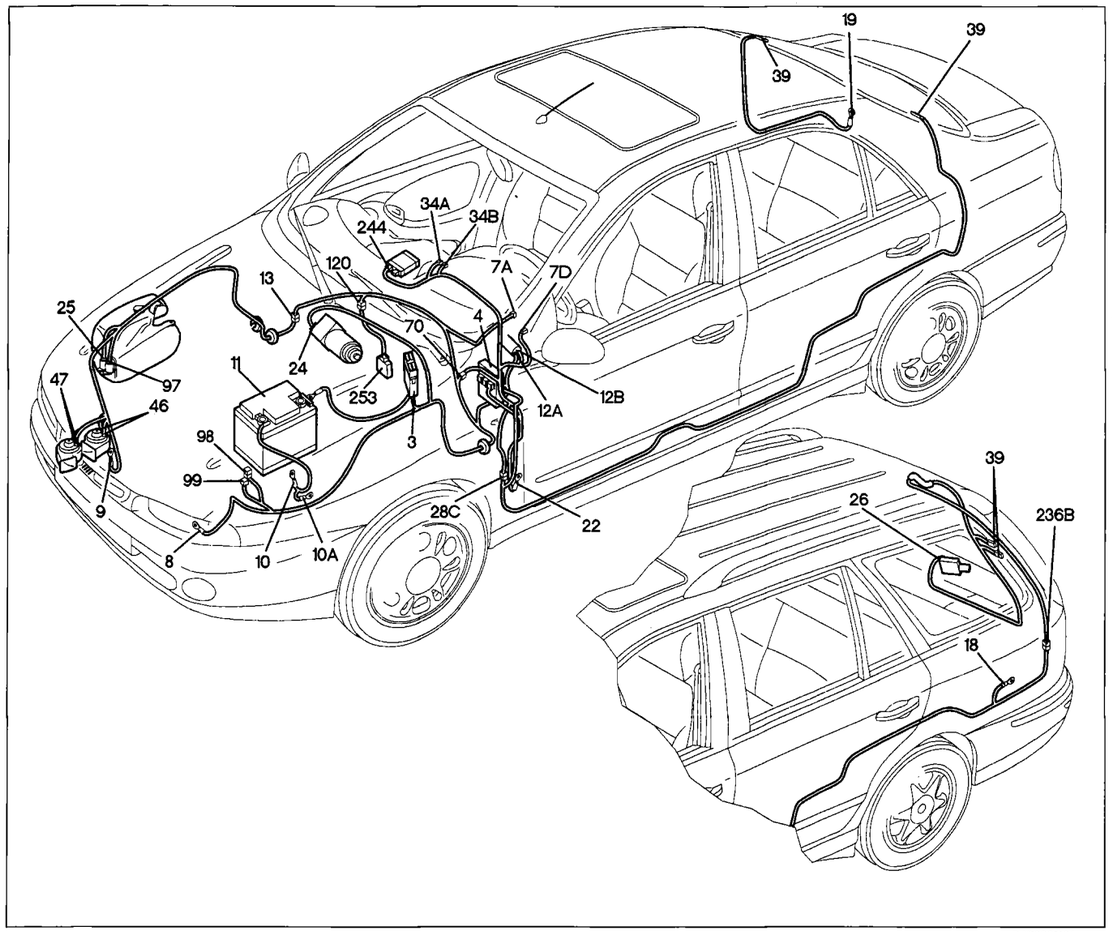

Windscreen wash/wipe - Rear window wash/wipe - Electric horns - Heated rear window - Headlamp washer

Key to components

3 Power fuse box
4 Fuse and relay unit
7 Stalk unit
8 Front left earth
9 Front right earth
10 Battery earth on engine
10A Battery earth on body shell
11 Battery
12 Ignition switch
13 Front right/left cables connection
18 Rear left earth
19 Rear right earth
22 Left dashboard earth
24 Windscreen wiper motor
25 Windscreen/rear window wash pump
26 Rear window wiper motor
28 Dashboard/rear cables connection
34 Switch unit
39 Heated rear window
46 Low tone left horn
47 High tone right horn
70 Dashboard/front cables connection
97 Headlamp washer pump
98 Headlamp washer intermittent switch
99 Headlamp washer fuse
120 Air conditioner cables connection
236 Rear cable/tailgate connection
244 Integrated services electronic control unit
253 Climate control system control unit
N.D. Ultrasound-soldered joint taped in wiring loom

4F071N

7A Stalk unit

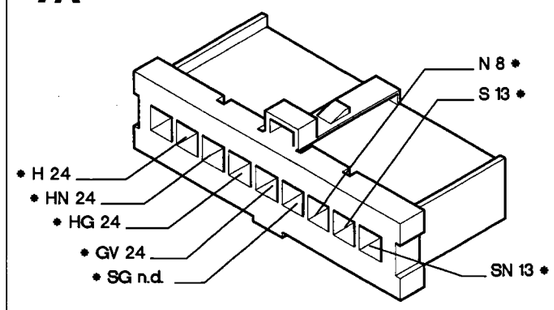

7D Stalk unit

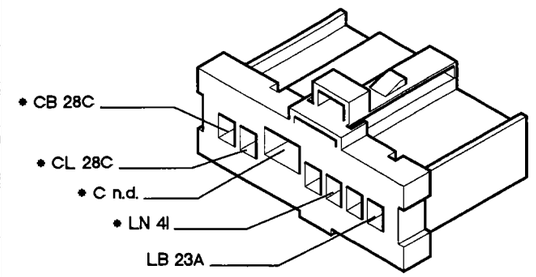

13 Front right/left cables connection

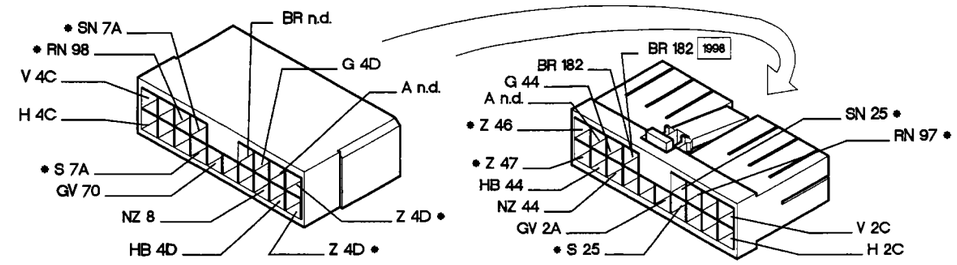

28C Dashboard/rear cables connection

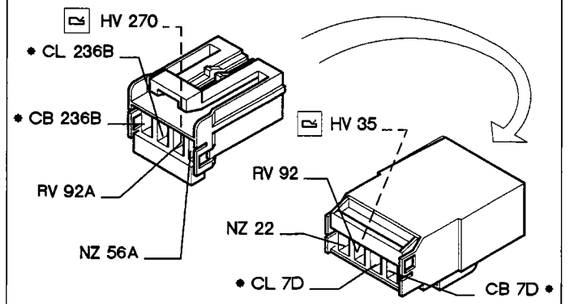

34A Switch unit

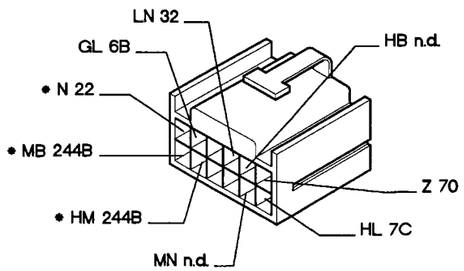

236B Rear cable/tailgate connection

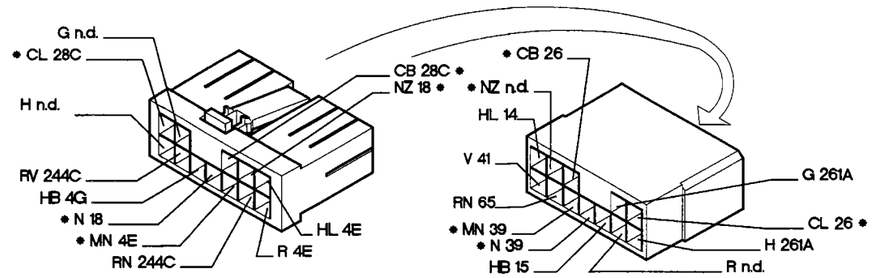

P4F084N01

* The cables involved in the wiring diagram are marked with an asterisk.

4F072N

Fuel level gauge and reserve warning light - Handbrake ON and low brake fluid warning light - Speedometer - Trip recorder/total mileage counter and reset button - Coolant temperature gauge - Low engine oil pressure warning light - Front brake pad wear warning light - Seat belt warning light

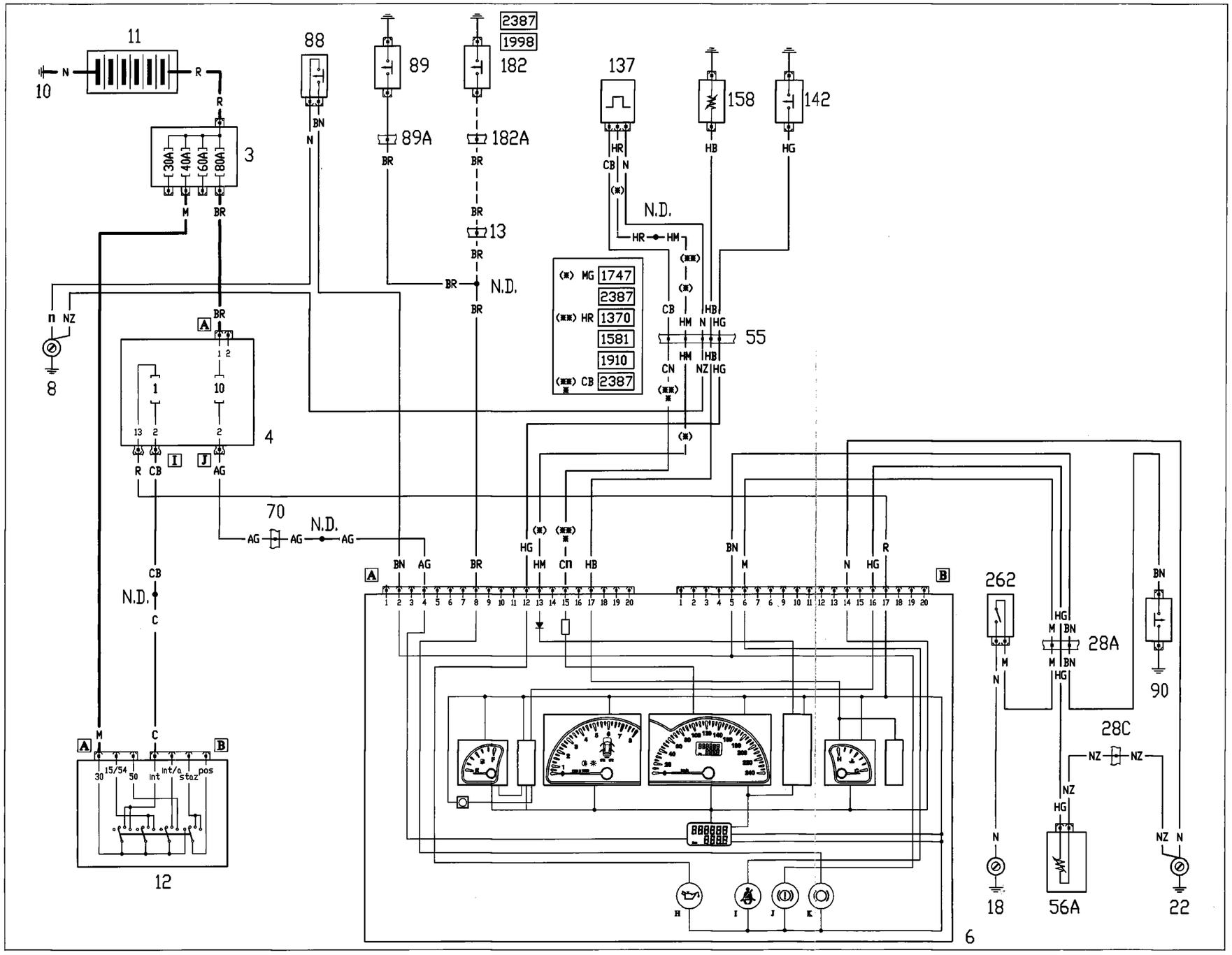

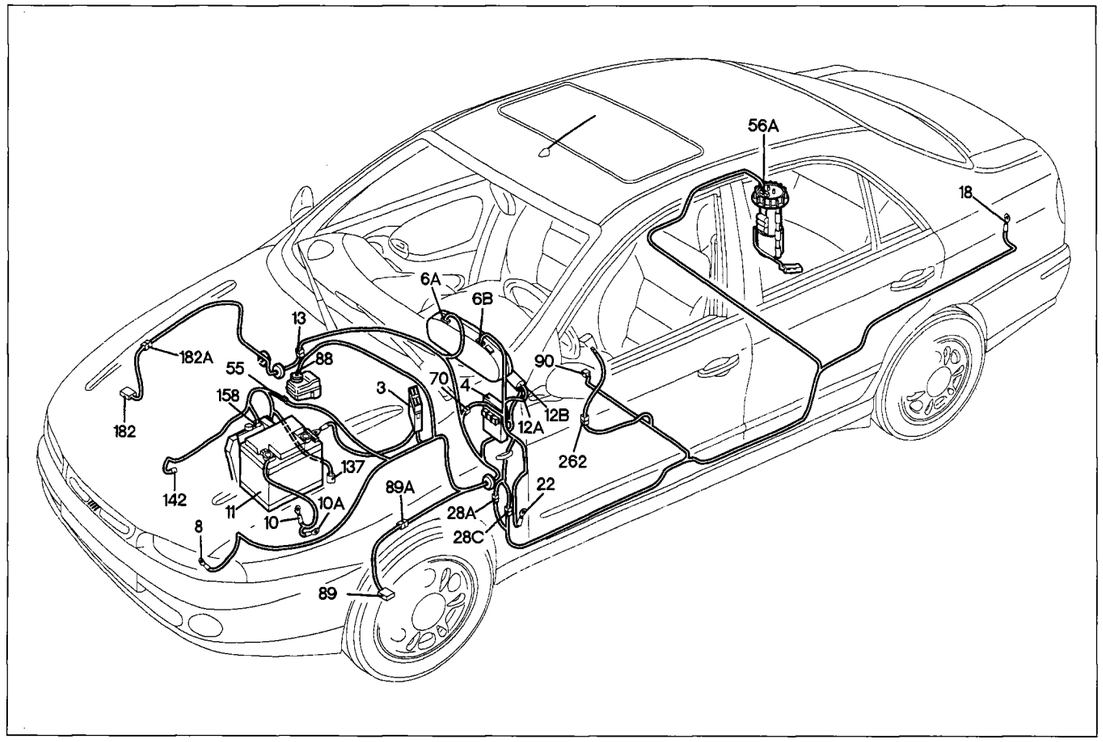

P4F087N01

Fuel level gauge and reserve warning light - Handbrake on and low brake fluid warning light - Speedometer - Trip recorder/total mileage counter and reset button - Engine coolant temperature gauge - Low engine oil pressure warning light - Front brake pad wear warning light - Seat belt warning light

Key to components

3 Power fuse box
4 Fuse and relay unit
6 Instrument panel
8 Front left earth
10 Battery earth on engine
10A Battery earth on body shell
11 Battery
12 Ignition switch
13 Front righ/left cables connection
18 Rear left earth
22 Left dashboard earth
28 Dashboard/rear cables connection
55 Front left/engine cables connection
56 Fuel gauge sender unit

70 Dashboard/front cables connection
88 Low brake fluid level sensor
89 Left brake pad wear sensor
89A Left brake pad wear sensor cables connection
90 Handbrake on warning light switch

137 Car speed sensor
142 Low oil pressure warning light switch

158 Instrument water temperature sensor
182 Right brake pad wear sensor

182A Right brake pad wear sensor cables connection
262 Seat belts warning light switch

N.D. Ultrasound-soldered joint taped in wiring loom

4F074N

6A Instrument panel

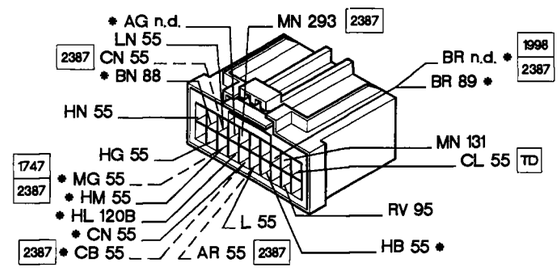

6B Instrument panel

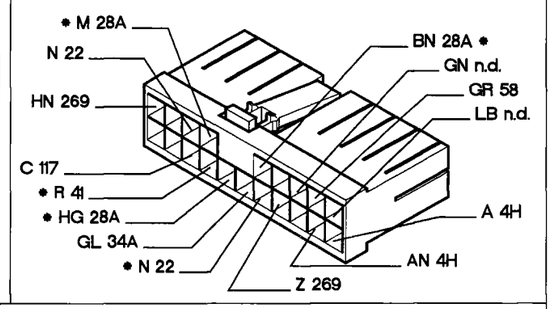

28A Dashboard/rear cables connection

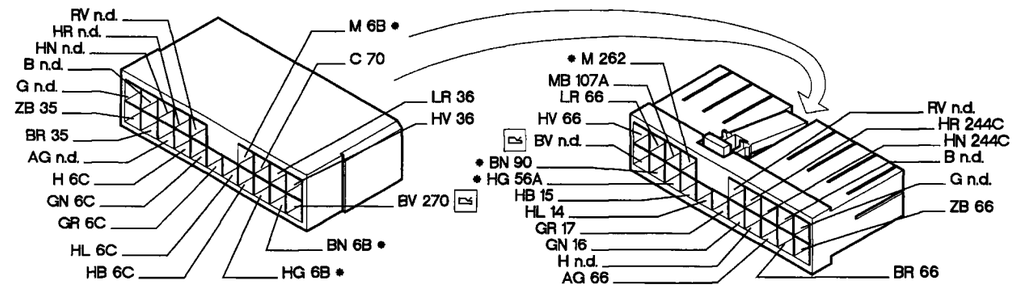

28C Dashboard/rear cables connection

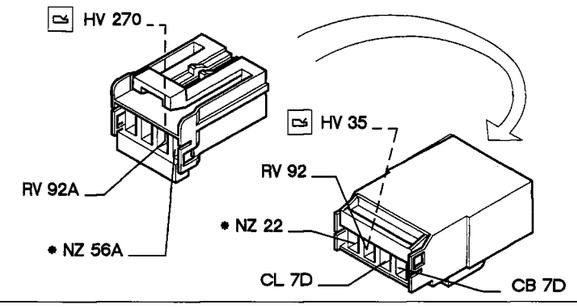

70 Dashboard/front cables connection

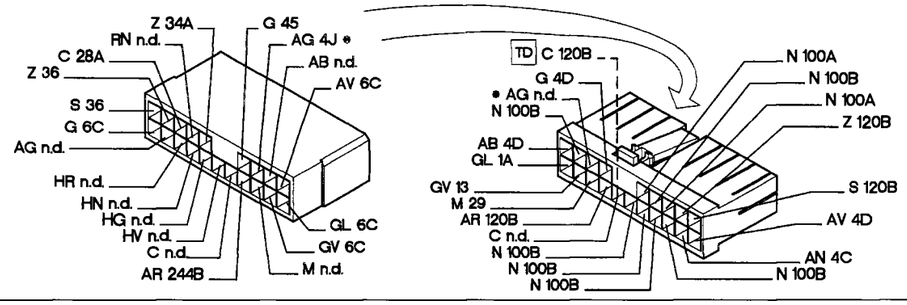

* The cables involved in the wiring diagram are marked with an asterisk.

P4F088N02

4F075N

Instrument panel connections

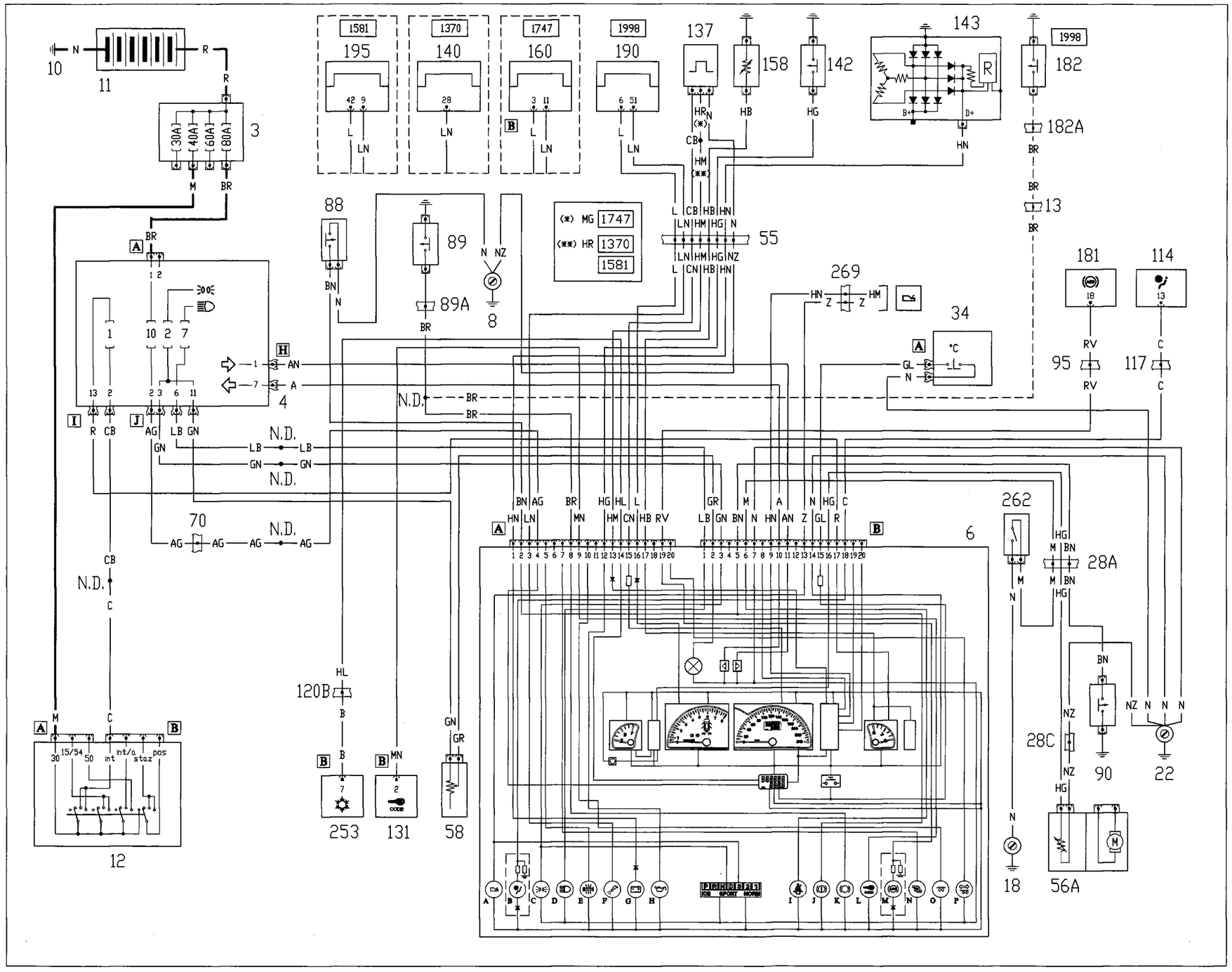

55.

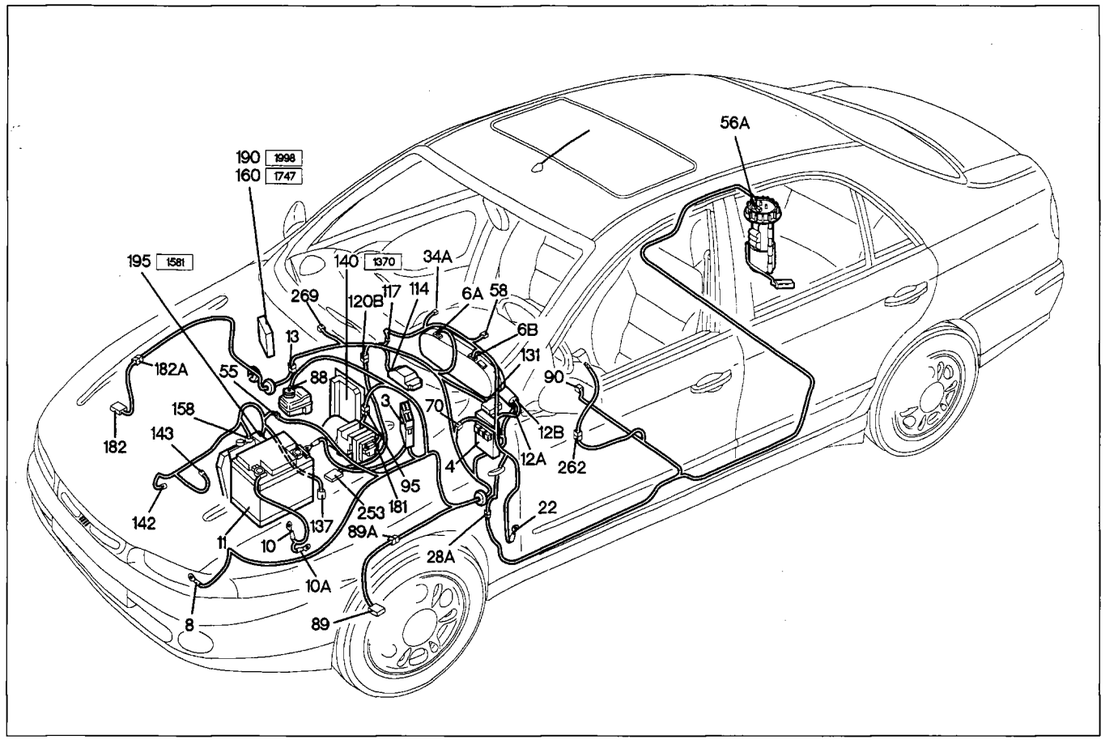

P4F091N01

Instrument panel connections

Key to components

3 Power fuse box
4 Fuse and relay unit
6 Instrument panel
8 Front left earth
10 Battery earth on engine
10A Battery earth on body shell
11 Battery
12 Ignition switch
13 Front right/left cables connection
22 Left dashboard earth
28 Dashboard/rear cables connection
34 Switch control unit
55 Front left/engine cables connection
56 Fuel gauge control unit
58 Instrument panel lighting intensity adjustment rheostat
70 Dashboard/front cables connection
88 Low brake fluid level sensor
89 Left brake pad wear sensor
89A Left brake pad wear sensor cables connection
90 Handbrake on warning light switch
95 Front cables/A.B.S. cables connection
114 Air Bag electronic control unit
117 Air Bag/dashboard cables connection
120 Air conditioner cables connection
131 Fiat CODE system electronic control system
137 Vehicle speed sensor
140 Fuel injection/ignition control unit (1370)
142 Low engine oil pressure warning light switch
143 Alternator
158 Instrument water temperature sensor
160 Ignition/fuel injection electronic control unit (1747)
181 Electrohydraulic control unit for anti-lock braking system (A.B.S.)
182 Right wheel brake pad wear sensor
182A Right brake pad wear sensor cables connection
190 Ignition/fuel injection electronic control unit (1998)
195 Ignition/fuel injection electronic control unit (1581)
253 Climate control unit
262 Seat belts warning light
269 Auto transmission/dashboard cables connection

N.D. Ultrasound-soldered joint taped in wiring loom

4F077N

6A Instrument panel

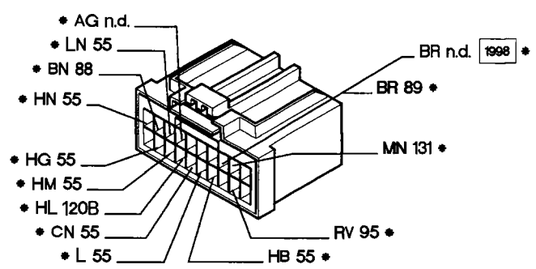

6B Instrument panel

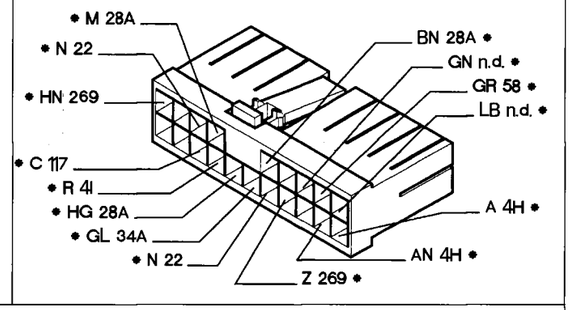

28A Dashboard/rear cables connection

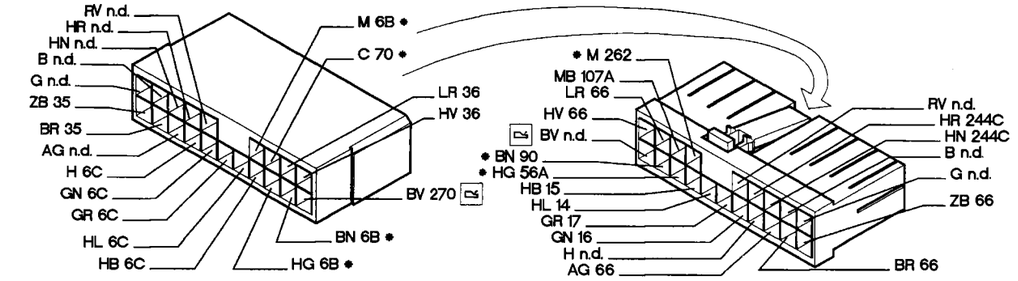

28C Dashboard/rear cables connection

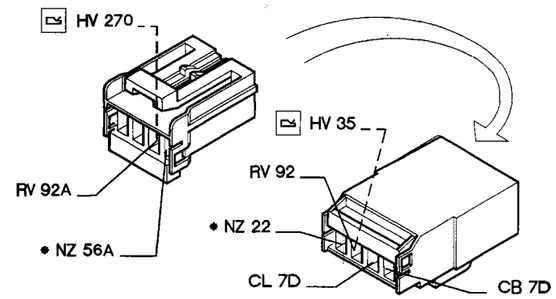

70 Dashboard/front cables connection

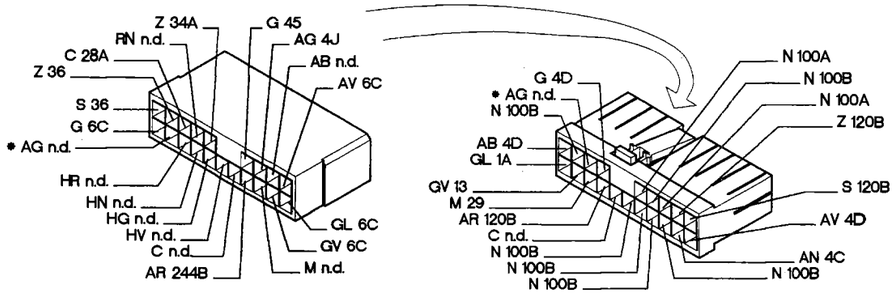

P4F092N01

* The cables involved in the wiring diagram are marked with an asterisk.

4F078N

Check panel connections

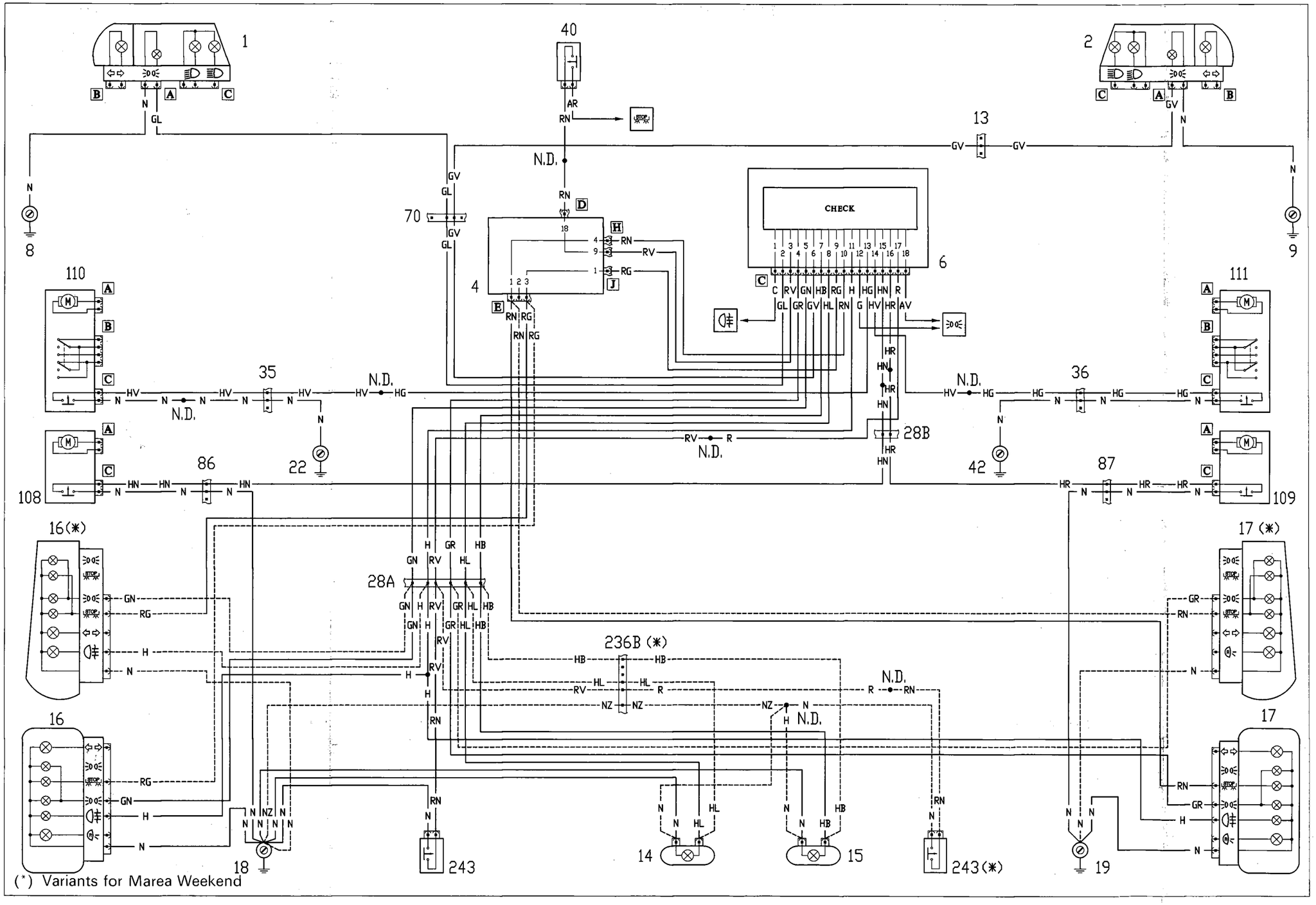

(*) Variants for Marea Weekend

4F079N

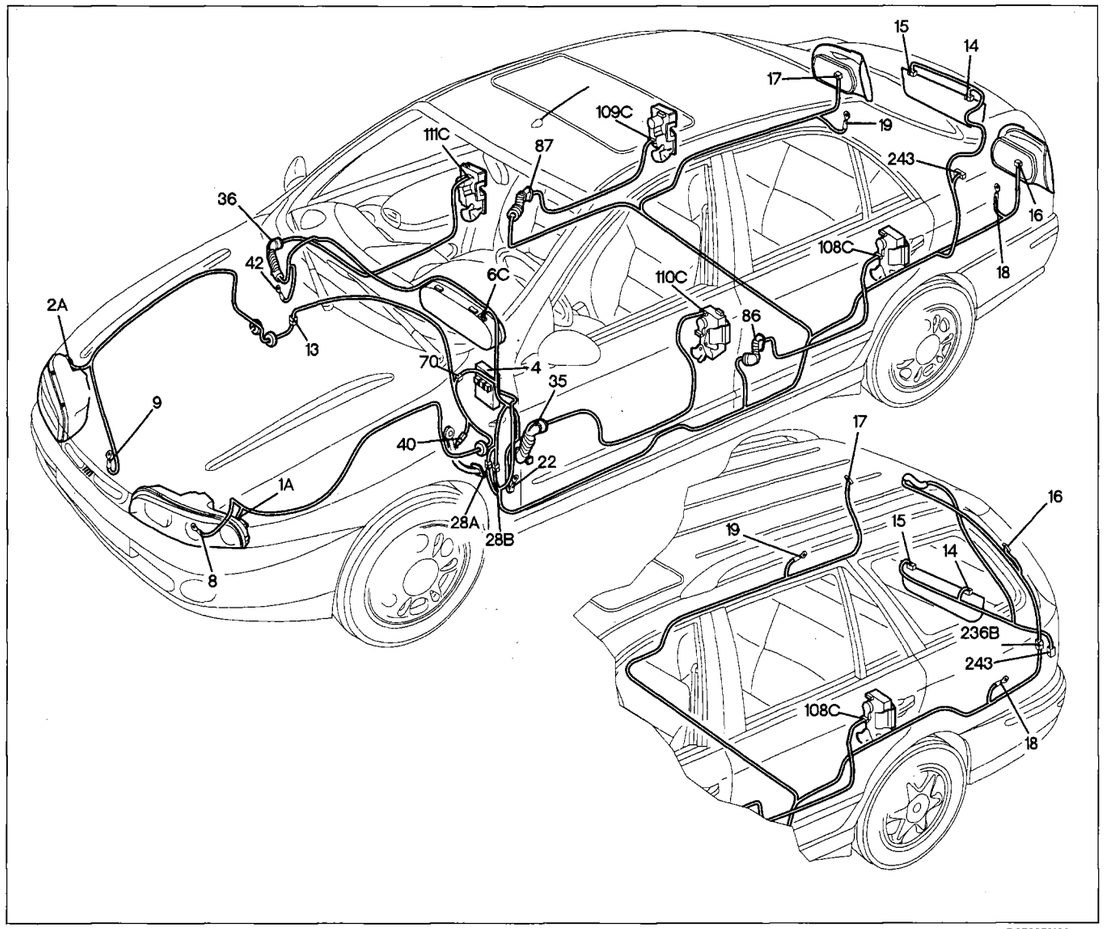

P4F095N01

Check Panel connections

Key to components

1 Front left lights cluster
2 Front right lights cluster
4 Fuse and relay unit
6 Instrument panel
8 Front left earth
9 Front right earth
13 Right/left front cables connection
14 Left number plate light bulb
15 Right number plate light bulb
16 Rear left lights cluster
17 Rear right lights cluster
18 Rear left earth
19 Rear right earth
22 Left dashboard earth
28 Dashboard/rear cables connection
35 Dashboard/front left door cables connection
36 Dashboard cables/front right door cables connection
40 Stop lights switch
42 Right dashboard earth
70 Dashboard/front cables connection
86 Rear cables/rear left door cables connection
87 Rear cables/rear right door cables connection
108 Rear left door lock
109 Rear right door lock
110 Front left door lock
111 Front right door lock
236 Rear cable/tailgate connection
243 Luggage compartment light button

N.D. Ultrasound-soldered joint taped in wiring loom

4F080N

28A Dashboard/rear cables connection

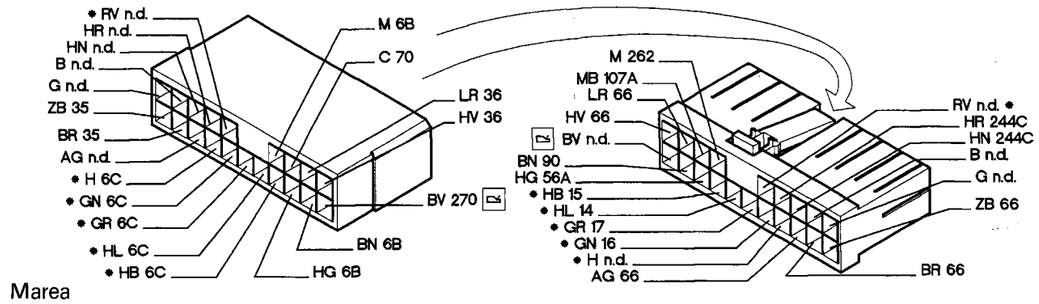

Marea

28A Dashboard/rear cables connection

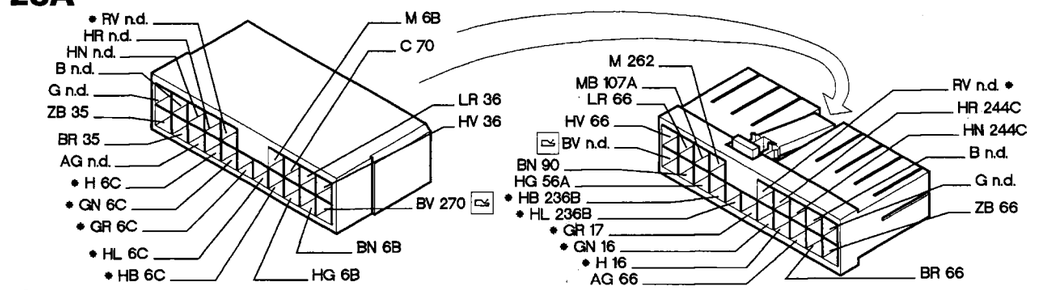

Marea Weekend

70 Dashboard/front cables connection

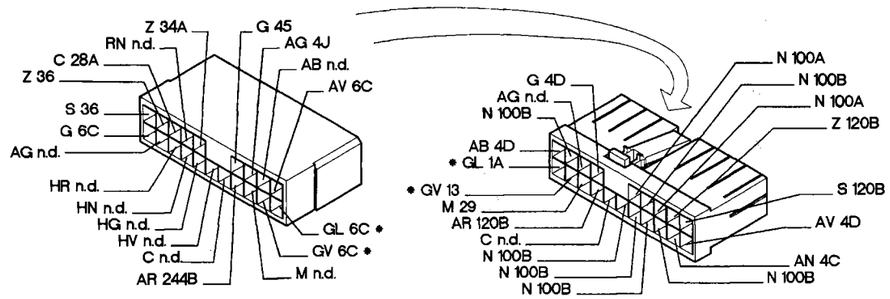

86 Rear cables/rear left door cables connection

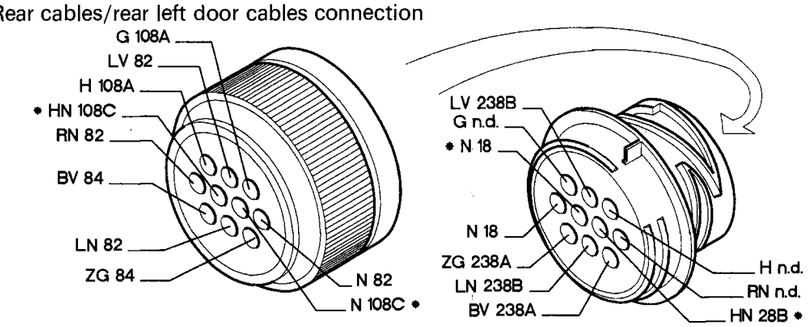

P4F096N01

* The cables involved in the wiring diagram are marked with an asterisk.

4F081N

Thermostatically-controlled air conditioner/heater (1370-1581 engine)

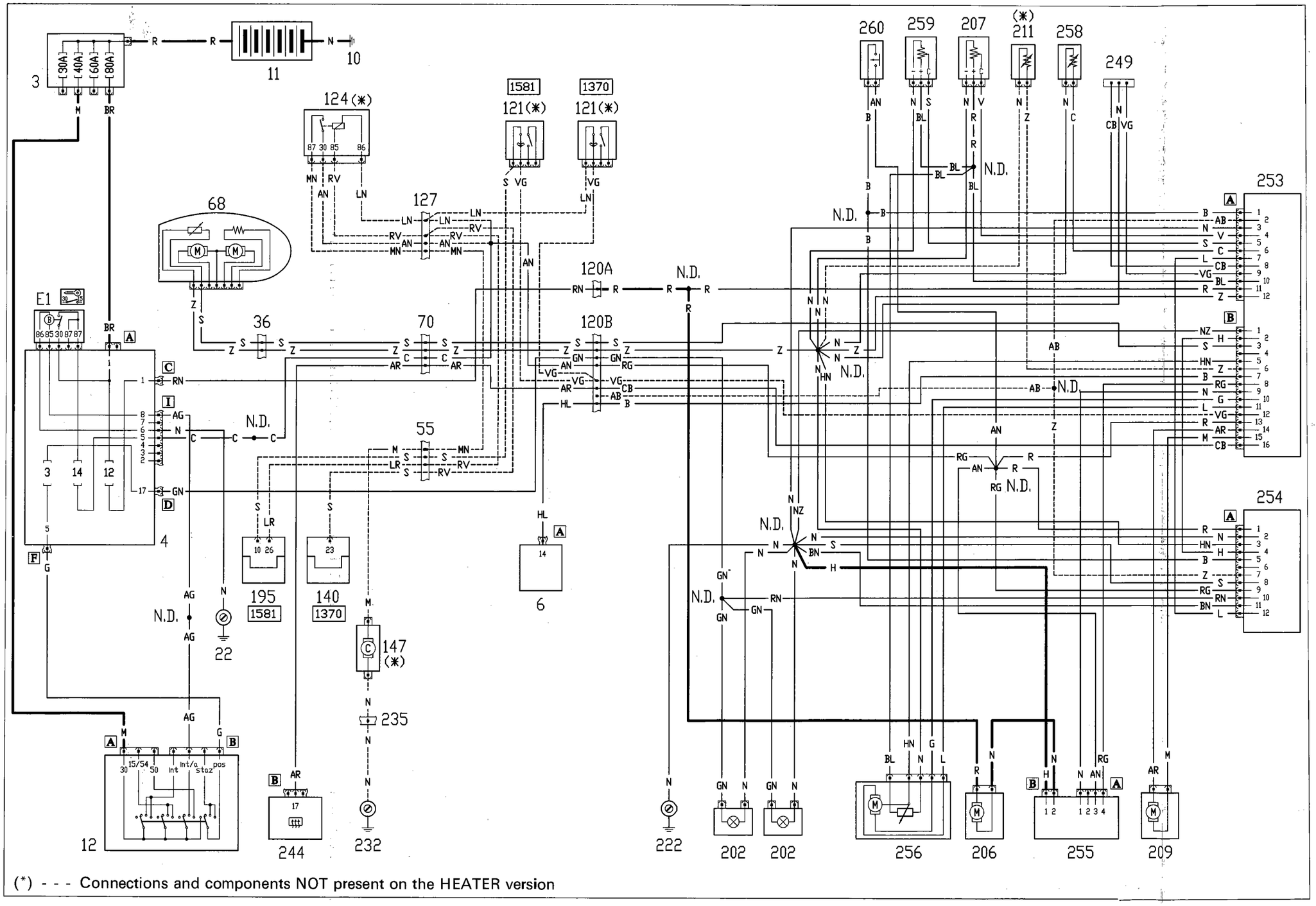

4F082N

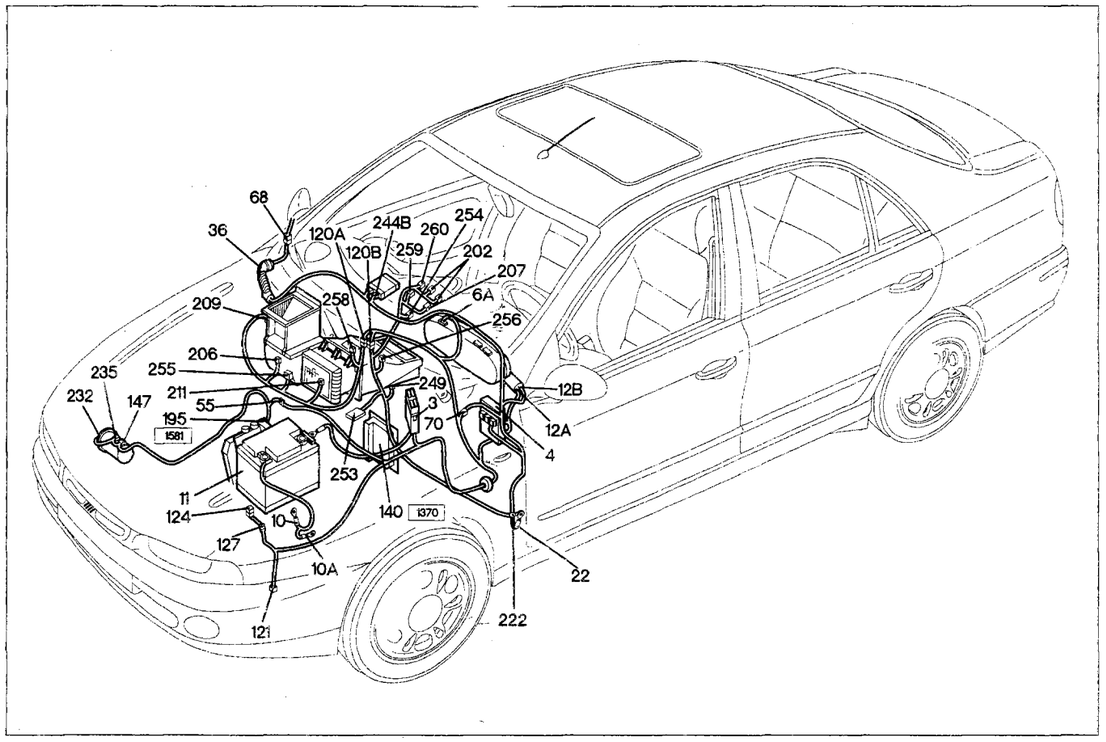

P4F099N01

Thermostatically-controlled air conditioner/heater (1370-1581 engine)

Key to components

3 Power fuse box
4 Fuse and relay unit
6 Instrument panel
10 Battery earth on engine
10A Battery earth on body shell
11 Battery
12 Ignition switch
22 Left dashboard earth
36 Dashboard/front right door cables connection
55 Front left/engine cables connection
68 Right external rearview mirror
70 Dashboard/front cables connection
120 Air conditioner cables connection
121 Three-stage pressure switch
124 Air conditioner compressor relay
127 Front left cable/cable on rear relay bracket connection
140 Fuel injection/ignition control unit (1370)
147 Compressor for air conditioner
195 Ignition/fuel injection electronic control unit (1581)
202 Heater/air conditioner controls symbols light bulb
206 Car interior air climate control fan
207 Fan speed adjustment switch
209 Air intake flap control actuator
211 Anti-frost sensor
222 Air conditioner earth
232 Compressor air conditioner
235 Air conditioner compressor cables connection
244 Integated services electronic control unit
249 Climate control diagnostic socket
253 Climate control unit
254 Climate control system controls with car interior temperature sensor
255 Climate control fan speed electronic variator
256 Air mixer control actuator
258 Treated air temperature sensor
259 Switch for required temperature adjustment
260 "MAX-DEF" microswitch

N.D. Ultrasound-soldered joint taped in wiring loom

4F083N

55 1370 Front left/engine cables connection

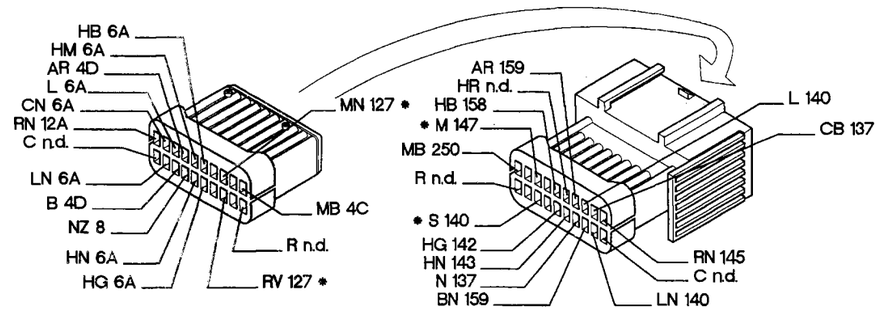

55 1581 Front left/engine cables connection

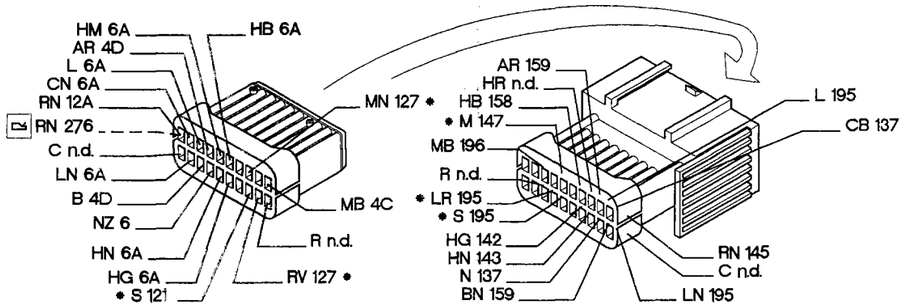

120B Air conditioner cables connection

AUTO

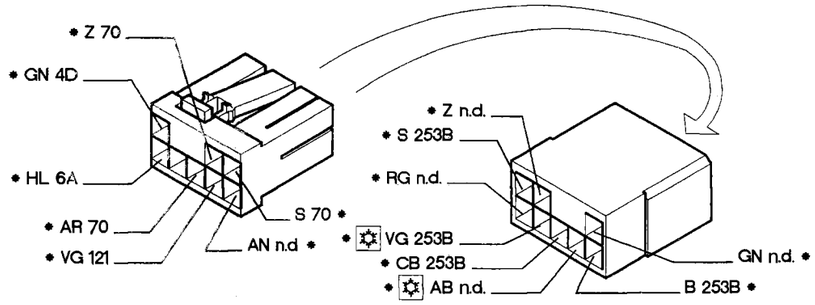

127 1370 1581 Connection between front left cable/cable on relay bracket

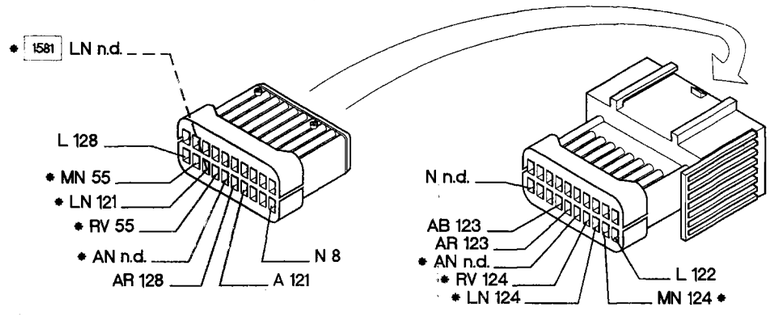

* The cables involved in the wiring diagram are marked with an asterisk.

P4F100N01

4F084N

Thermostatically-controlled air conditioner/heater (1747 engine)

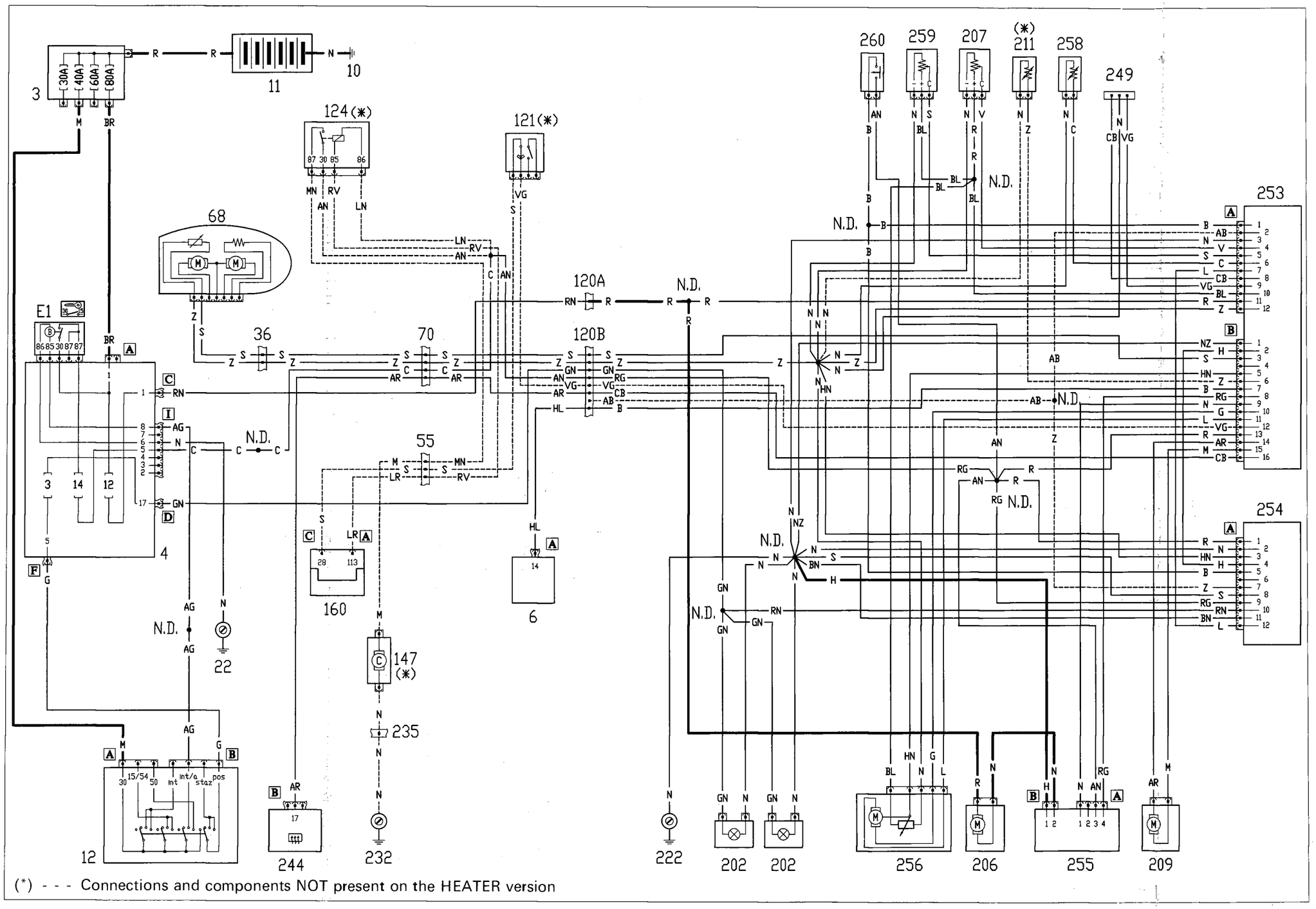

(*) - - - Connections and components NOT present on the HEATER version

4F085N

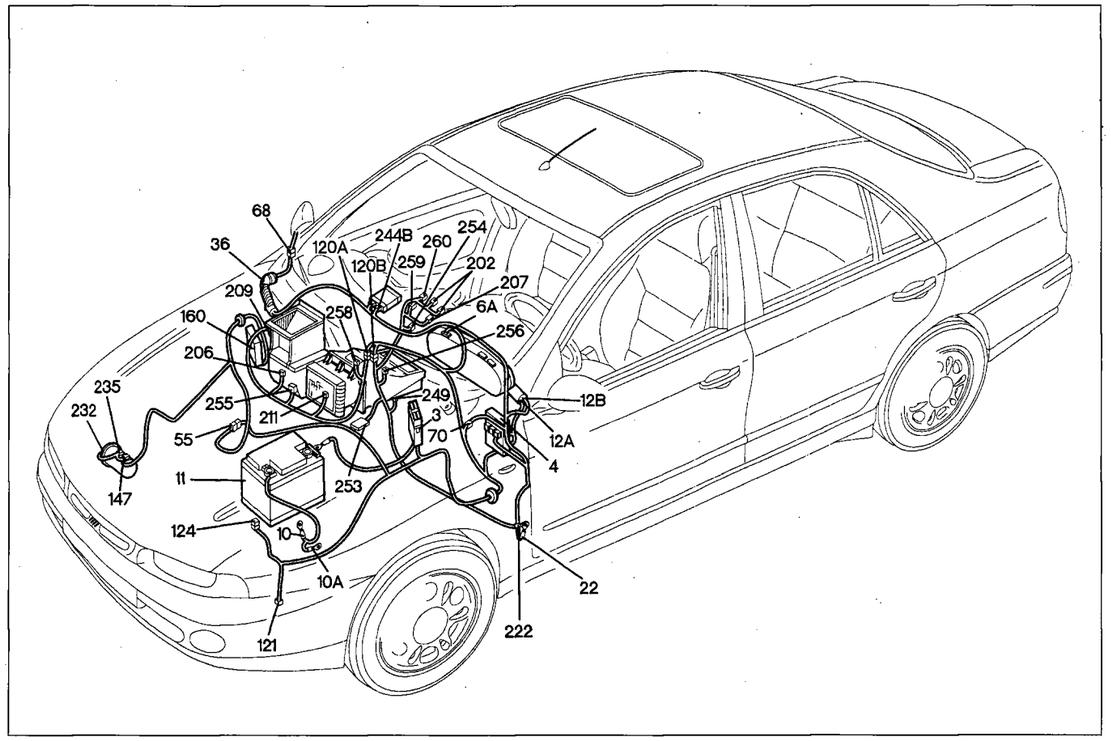

P4F103N01

Thermostatically-controlled air conditioner/heater (1747 engine)

Key to components

3 Power fuse box
4 Fuse and relay unit
6 Instrument panel
10 Battery earth on engine
10A Battery earth on body shell
11 Battery
12 Ignition switch
22 Left dashboard earth
36 Dashboard/front right door cables connection
55 Front left/engine cables connection
68 Right external rearview mirror
70 Dashboard/front cables connection
120 Air conditioner cables connection
121 Three-stage pressure switch
124 Air conditioner compressor control relay
147 Compressor for air conditioner
160 Ignition/fuel injection electronic control unit (1747)
202 Heater/air conditioner control symbols light bulb
206 Car interior climate control fan
207 Fan speed adjustment switch
209 Air intake flap actuator
211 Anti-frost sensor
222 Climate control system earth
232 Compressor earth
235 Air conditioner compressor cables connection
244 Integarated services electronic control unit
249 Diagnostic socket for climate control system
253 Climate control unit
254 Climate control sustem controls with car interior temperature sensor
255 Electronic speed variator for climate control fan
256 Air mixer control actuator
258 Treated air temperature sensor
259 Required temperature adjustement switch
260 "MAX-DEF" microswitch

N.D. Ultrasound-soldered joint taped in wiring loom

4F086N

55 Front left/engine cables connection

1747

HB 6A
HM 6A
AR 4D
L 6A
CN 6A
RN 12A
C n.d.
LN 6A
B 4D
NZ 8
HN 6A
HG 6A
AG 212
AB 122
MN 124 *
MB 4C
A 121
RV 124 *
S 121 *
AG 123A
AR 159
HM n.d.
HB 158
AN 160B
* M 147
MB 257
G 160C
* LR 160A
* S 160C
AG 160B
HG 142
HN 143
N 137
BN 159
L 160B
CB 137
R n.d.
C n.d.
LN 160B

70 Dashboard/front cables connection

Z 34A
RN n.d.
C 28A
* Z 36
* S 36
G 6C
AG n.d.
HR n.d.
HN n.d.
HG n.d.
HV n.d.
* C n.d.
* AR 244B
G 45
AG 4J
AB n.d.
AV 6C
GL 6C
GV 6C
M n.d.
G 4D
AG n.d.
N 100B
AB 4D
GL 1A
GV 13
M 29
* AR 120B
* C n.d.
* N 100B
N 100B
N 100B
N 100A
N 100B
N 100A
Z 120B *
S 120B *
AV 4D
AN 4C
N 100B

120B Air conditioner cables connection

AUTO

* Z 70
* GN 4D
* HL 6A
* AR 70
* VG 121
S 70 *
AN n.d. *
* Z n.d.
* S 253B
* RG n.d.
* VG 253B
* CB 253B
* AB n.d.
GN n.d. *
B 253B *

120A Air conditioner cables connection

AUTO

* RN 4C
* R n.d.

124 Air conditioner compressor relay

1747

* LN n.d.
* AN n.d.
* RV 55
MN 55 *

P4F104N01

* The cables involved in the wiring diagram are marked with an asterisk.

4F087N

Thermostatically-adjustable air conditioner / heater (1998 engine)

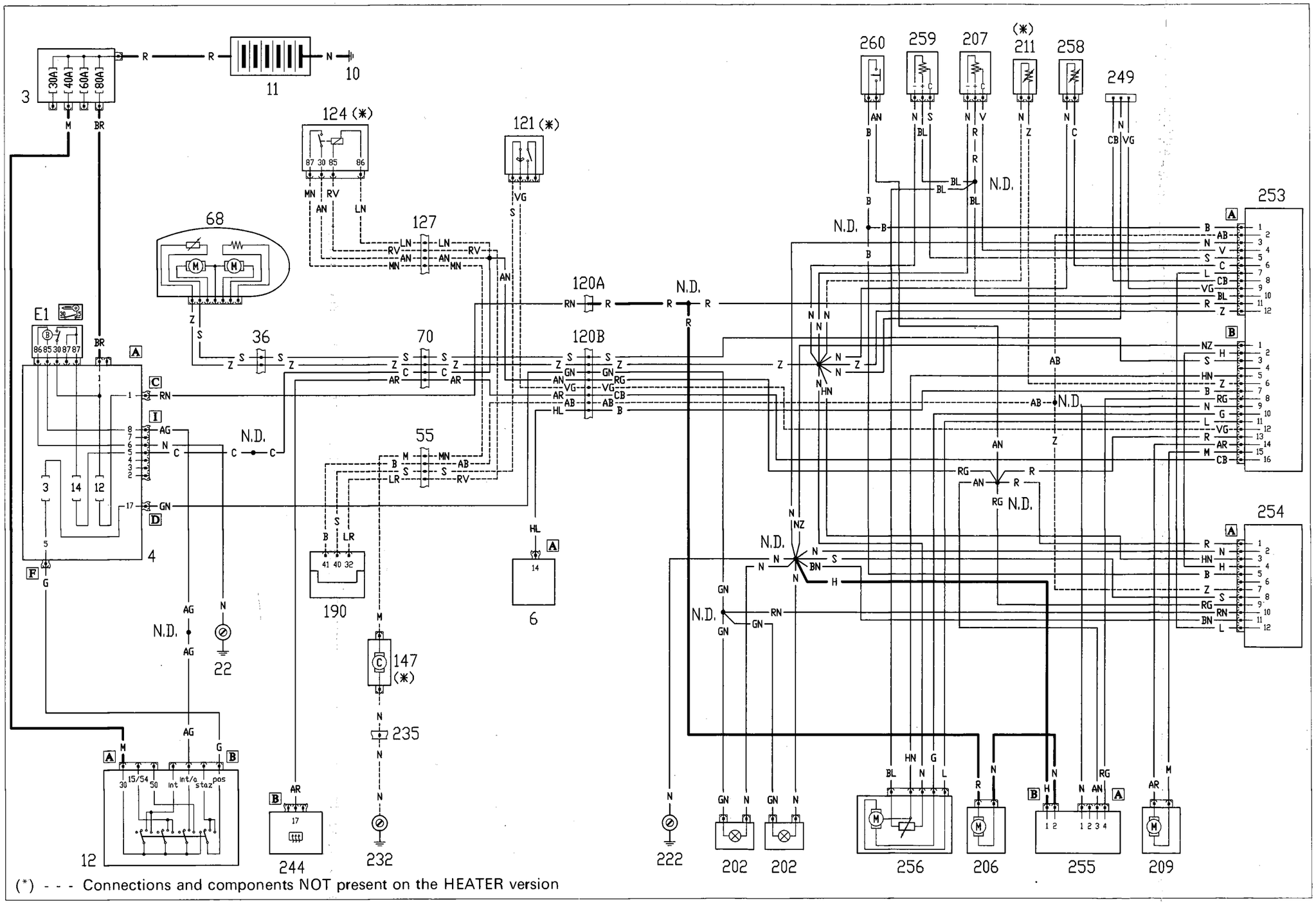

44088N

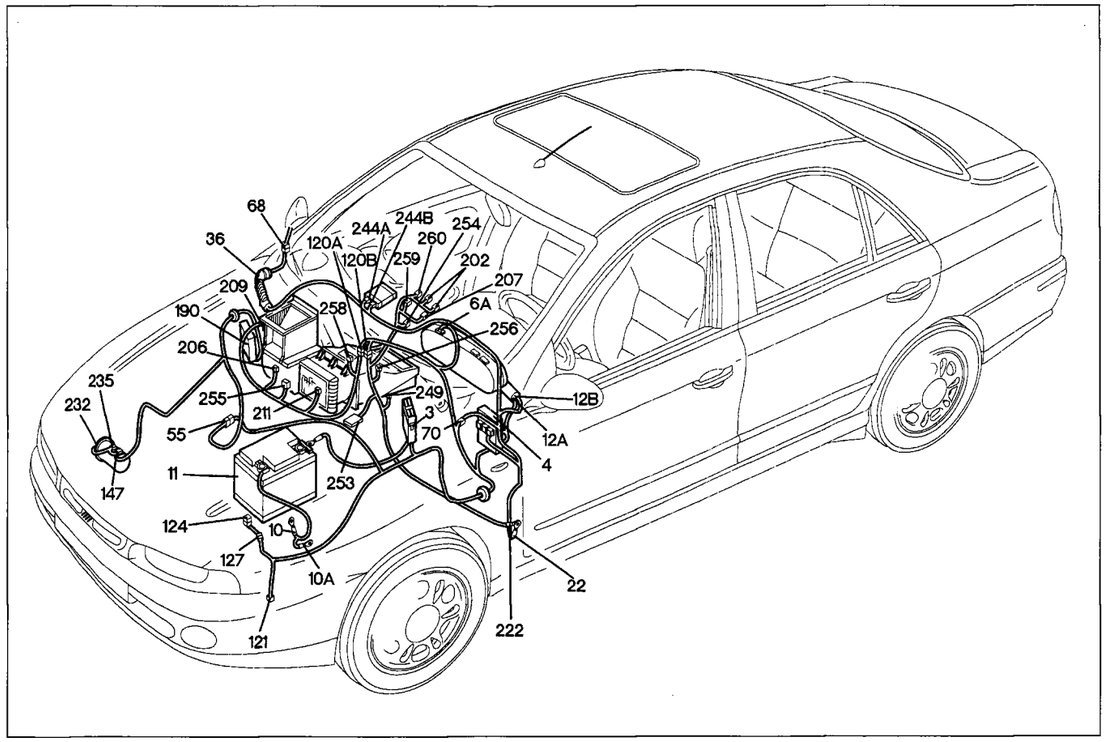

P4F107N01

Thermostatically-adjustable air conditioner/heater (1998 engine)

Key to components

3 Power fuse box
4 Fuse and relay unit
6 Instrument panel
10 Battery earth on engine
10A Battery earth on body shell
11 Battery
12 Ignition switch
22 Left dashboard earth
36 Dashboard/front right door cables connection
55 Front left/engine cables connection
68 Right external rearview mirror
70 Dashboar/front cables connection
120 Air conditioner cables connection
121 Three-stage pressure switch
124 Air conditioner compressor relay
127 Front left cable/relay bracket cable connection
147 Compressor for air conditioner
190 Ignition / fuel injection electronic control unit (1998)
202 Heater / air conditioner symbol controls light bulbs
206 Car interior climate control fan
207 Fan speed adjustment switch
209 Air intake flap actuator
211 Anti-frost sensor
222 Air conditioner system earth
232 Compressor earth
235 Air conditioner compressor cables connection
244 Integrated services electronic control unit
249 Air conditioner diagnostic socket
253 Air conditioner control unit
254 Air conditioner controls with car interior temperature sensor
255 Climate control fan speed electronic variator
256 Air mixing control actuator
258 Treated air temperature sensor
259 Required temperature adjustment switch
260 "MAX-DEF" microswitch

N.D. Ultrasound-soldered joint taped in wiring loom

4F089N

55 Front left/engine cables connection

1998

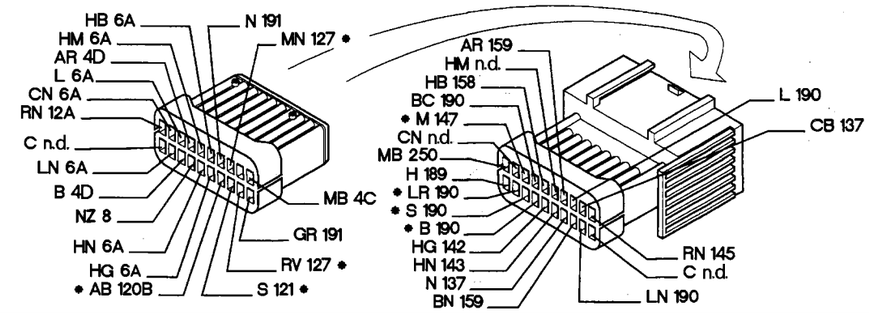

70 Dashboard/front cables connection

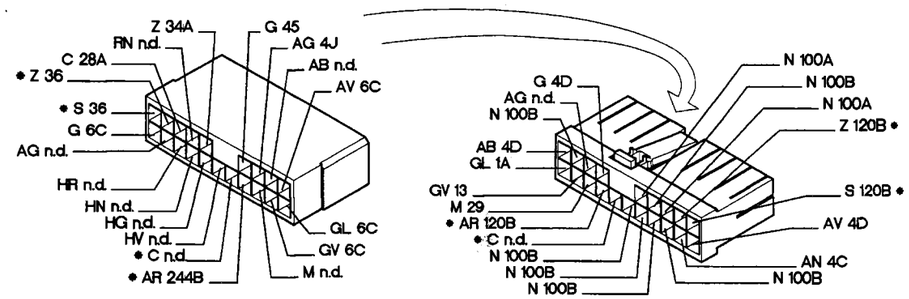

120B Air conditioner cables connection

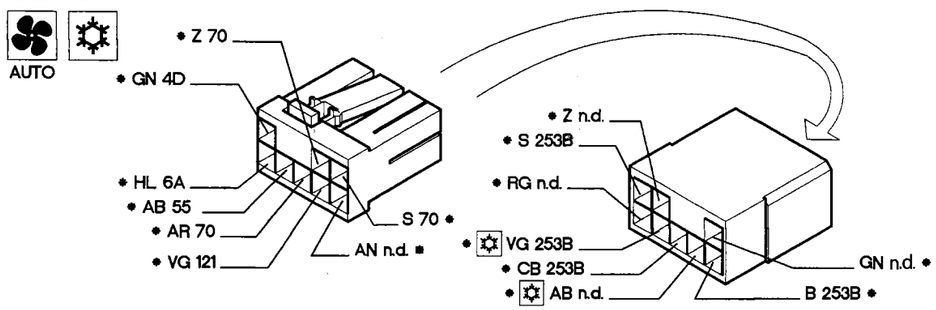

127 Front left cable/cable on relay bracket connection

1998

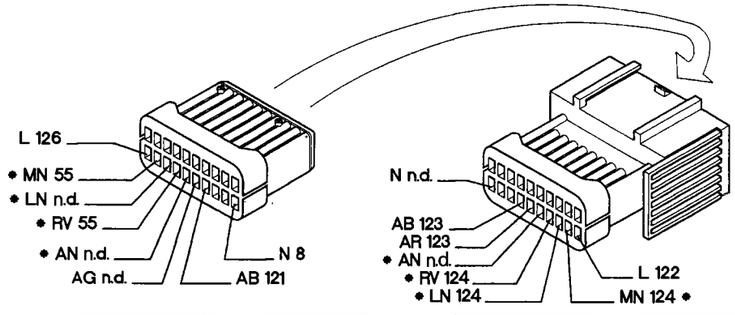

* The cables involved in the wiring diagram are marked with an asterisk.

P4F108N01

4F090N

Versions with air conditioner
Engine cooling system - Engine coolant gauge (1370-1581 engine)

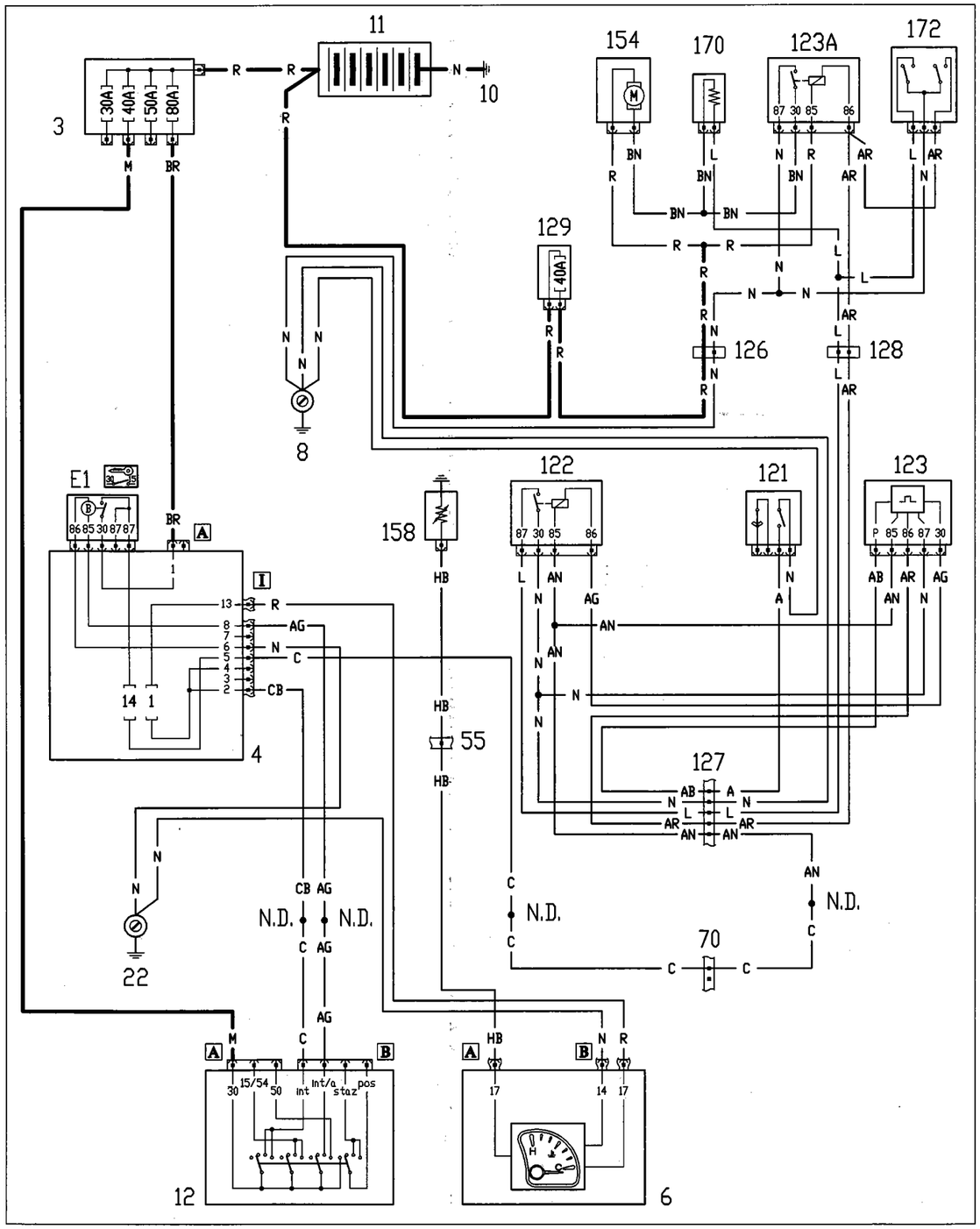

P4F109N01

4F091N

Location of components

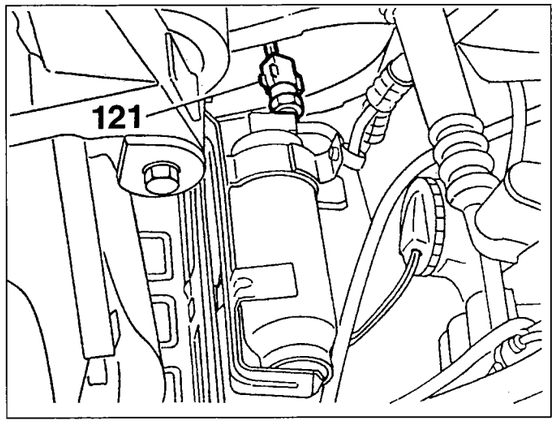

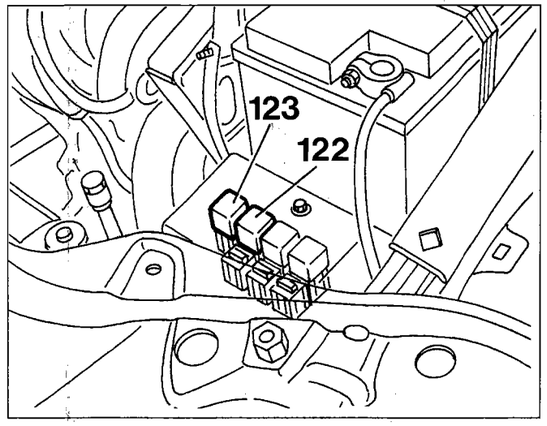

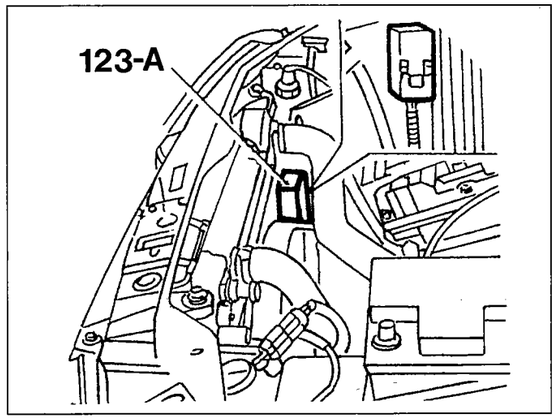

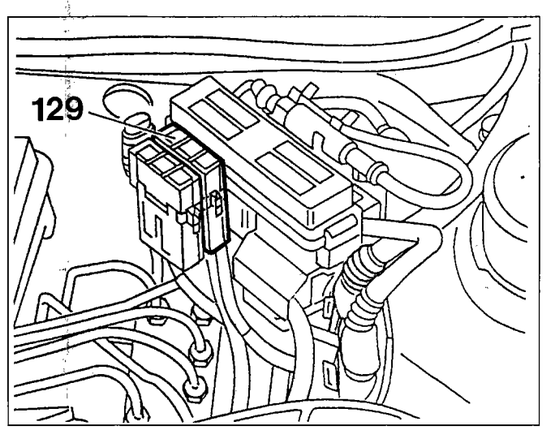

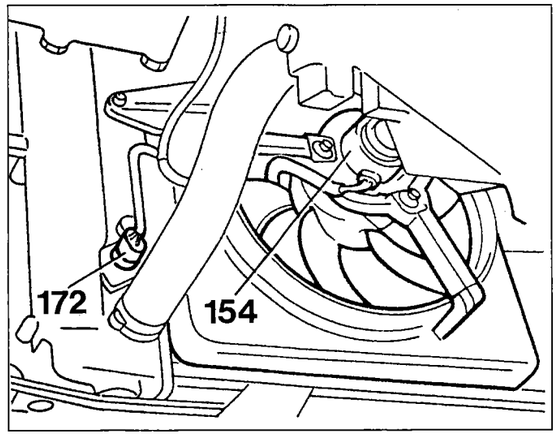

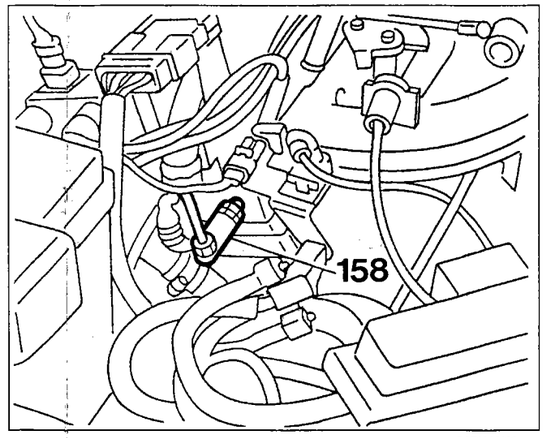

P4F110N01

4F092N

55.

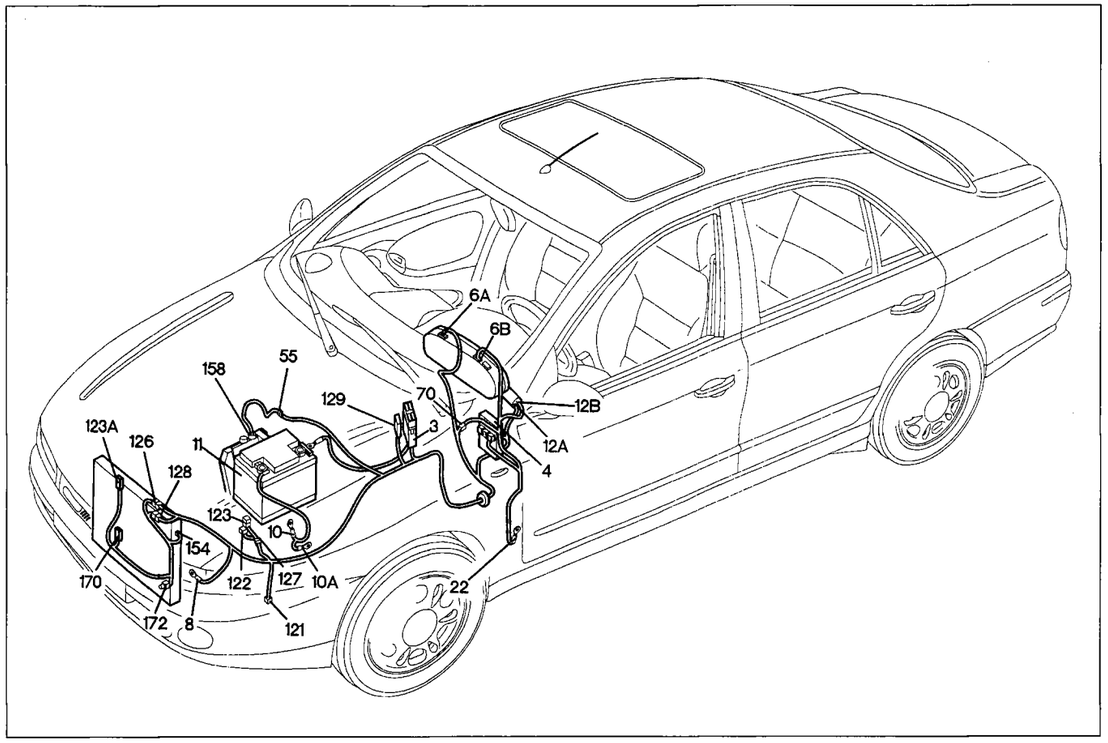

P4F111N01

Versions with air conditioner

Engine cooling system - Coolant temperature gauge (1370-1581 engine)

Key to components

3 Power fuse box
4 Fuse and relay unit
6 Instrument panel
8 Front left earth
10 Battery earth on engine
10A Battery earth on body shell
11 Battery
12 Ignition switch
22 Left dashboard earth
55 Front left/engine cables connection
70 Dashboard/front cables connection
121 Three-stage pressure switch
122 Engine cooling fan low speed relay
123 Engine cooling fan high speed timer
123A Engine cooling fan high speed relay
126 Radiator/front cables connection
127 Front left cable/cable on relay bracket connection
128 Radiator/front cables connection
129 Power fuse protecting engine cooling fan cables
154 Engine cooling fan
158 Water temperature sensor for gauge
170 Resistor for engine cooling fan
172 Two-stage thermostat

N.D. Ultrasound-soldered joint taped in wiring loom

4F093N

55 Front left/engine cables connection

1370

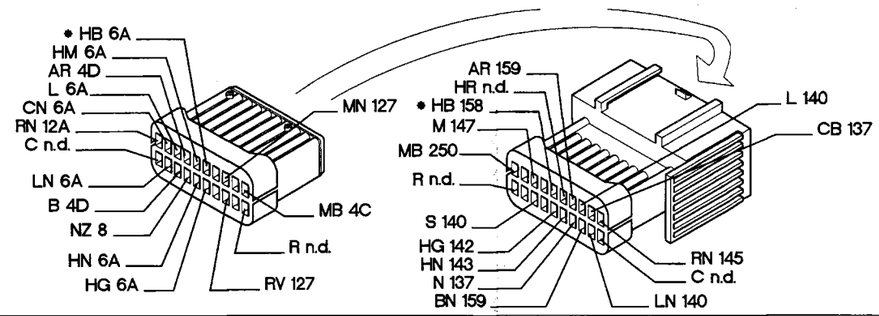

55 Front left/engine cables connection

1581

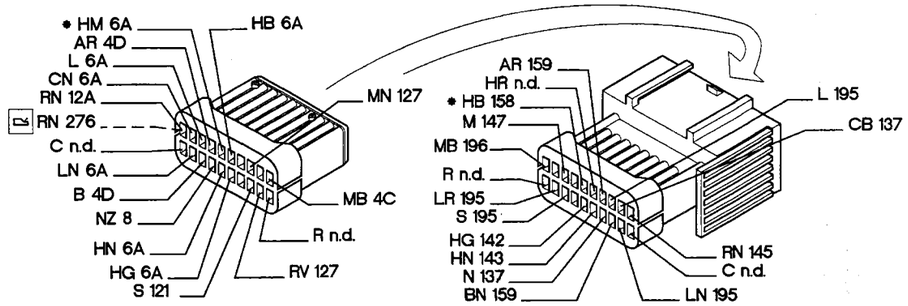

127 Front left cable/cable on relay bracket connection

1370
1581

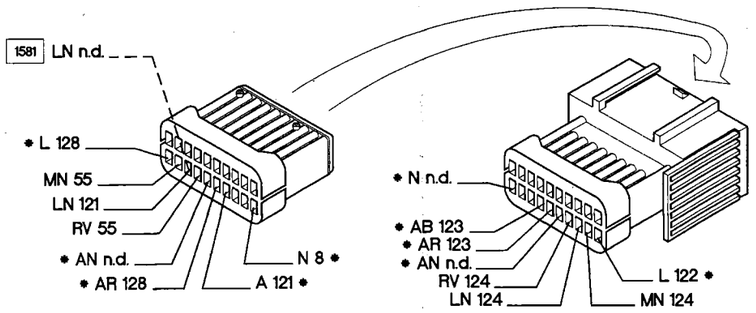

126 Radiator/front cables connection

1370
1581

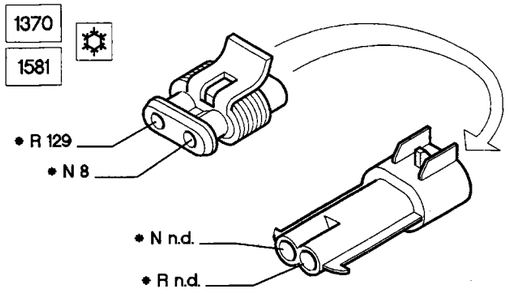

128 Radiator/front cables connection

1370
1581

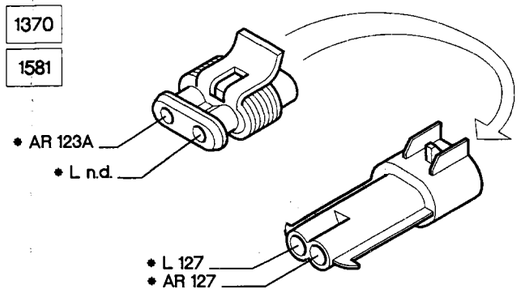

* The cables involved in the wiring diagram are marked with an asterisk.

P4F112N01

4F094N

Versions with air conditioner
Engine cooling system - Engine coolant temperature gauge (1747 engine)

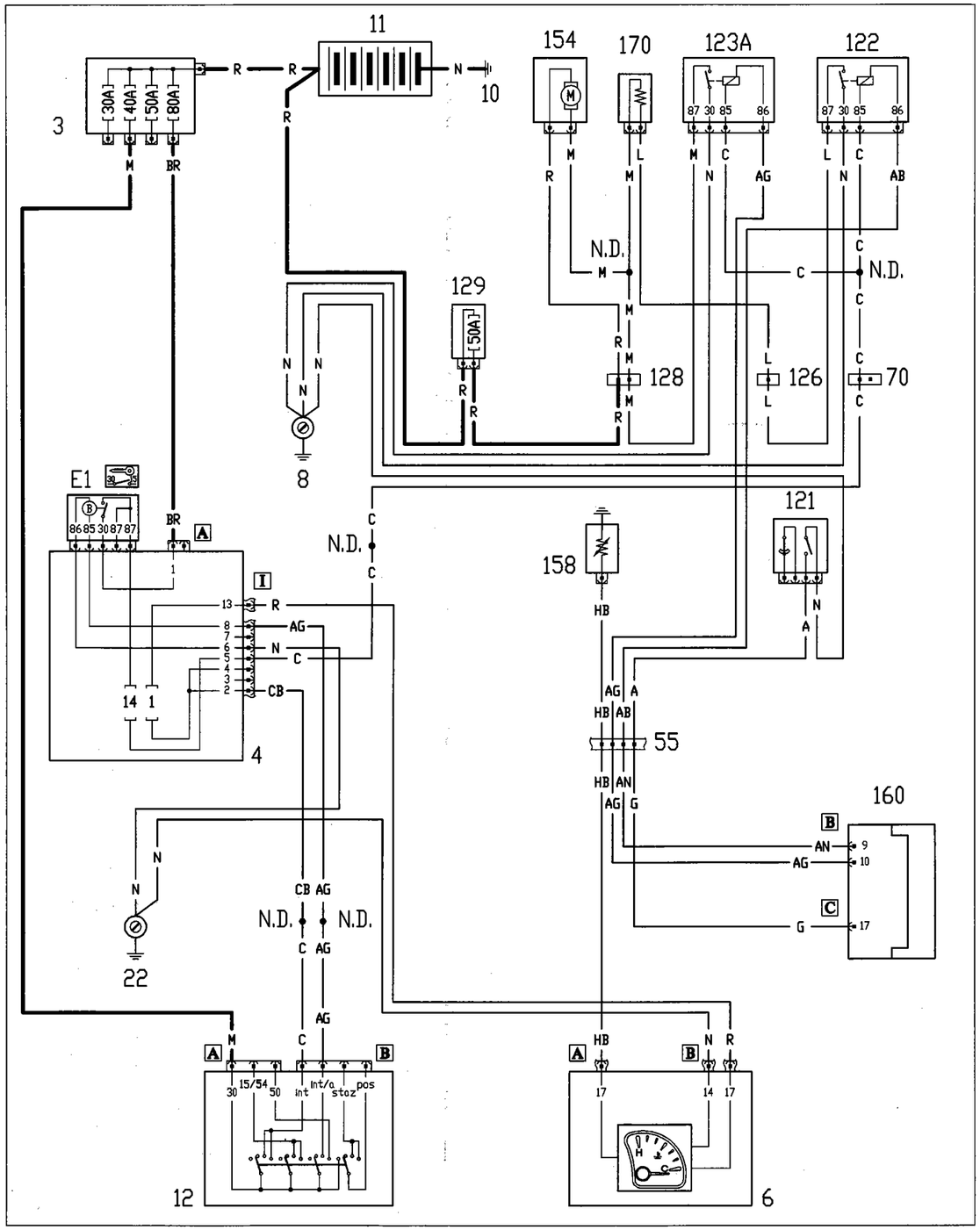

4F095N

Location of components

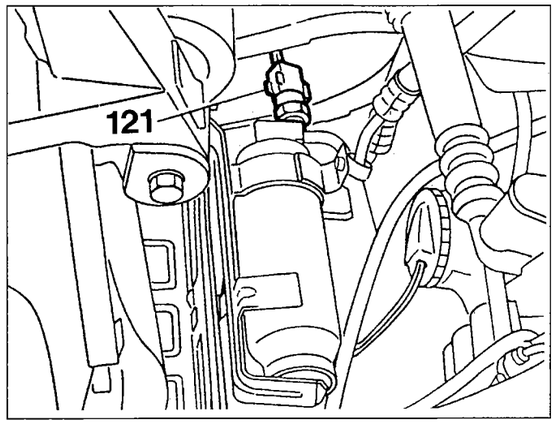

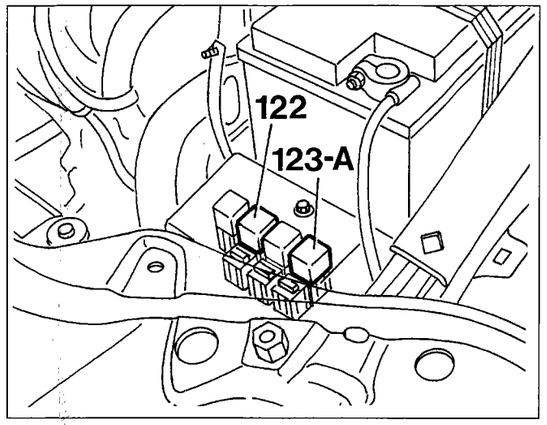

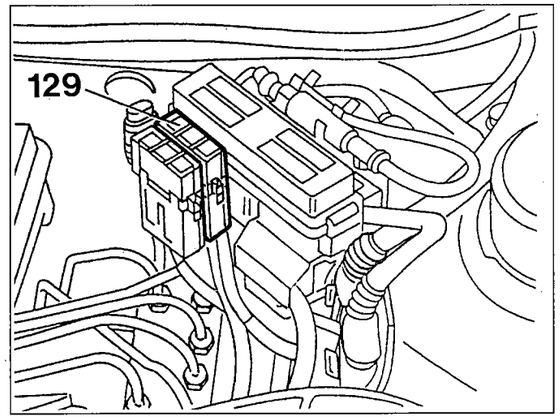

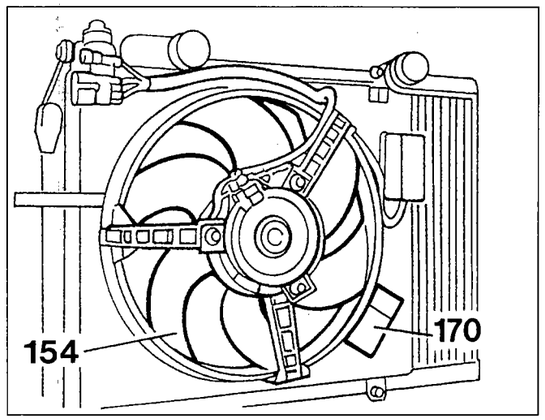

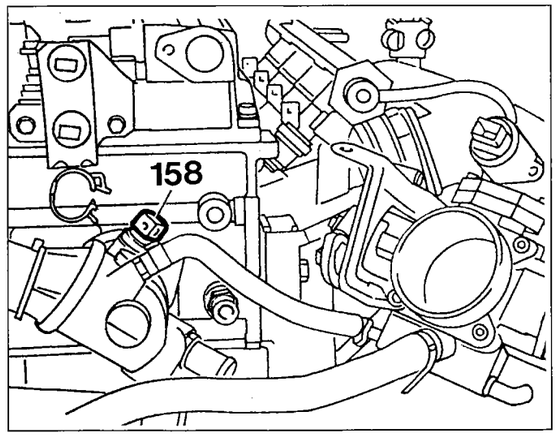

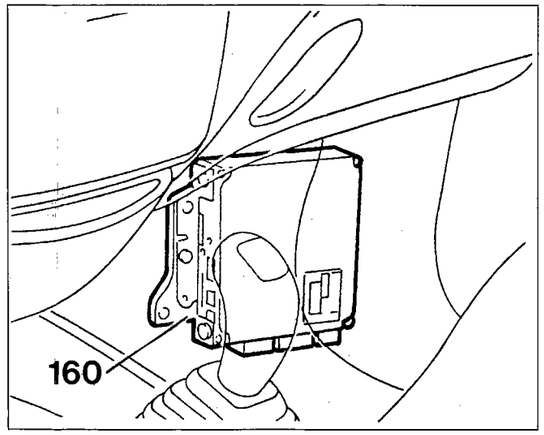

P4F114N01

4F096N

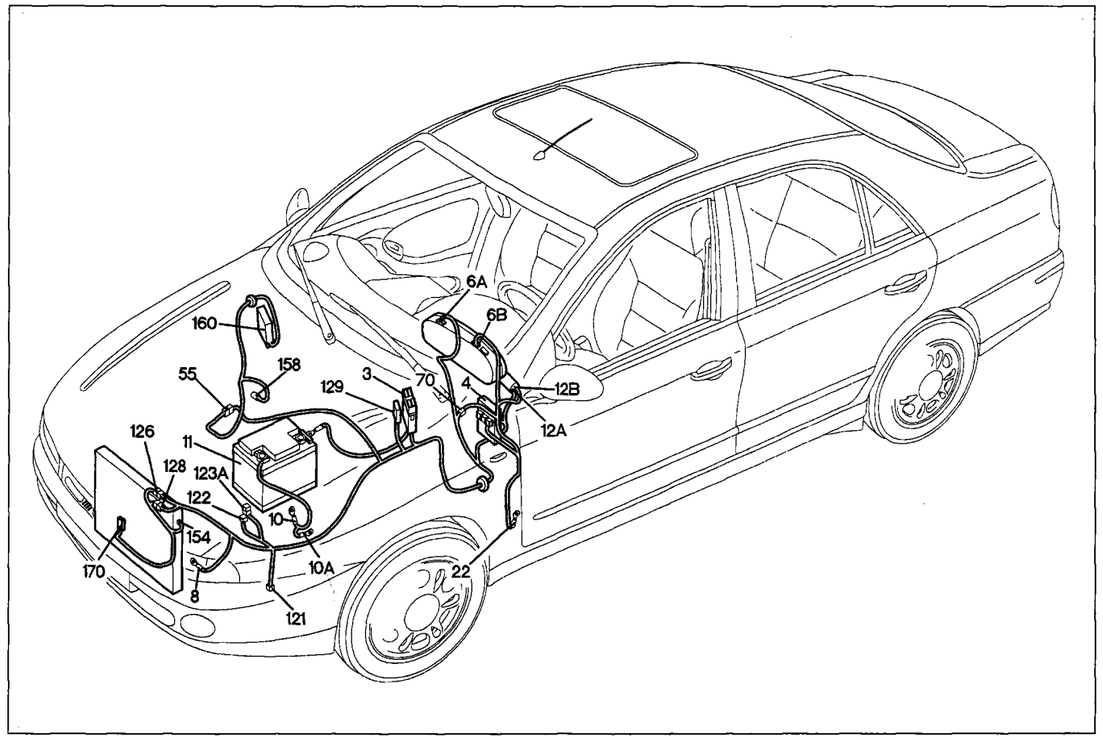

P4F115N01

Versions with air conditioner

Engine cooling system - Engine coolant temperature gauge (1747 engine)

Key to components

3 Power fuse
4 Fuse and relay unit
6 Instrument panel
8 Front left earth
10 Battery earth on engine
10A Battery earth on body shell
11 Battery
12 Ignition switch
22 Left dashboard earth
55 Front left/engine cables connection
70 Dashboard/front cables connection
121 Three-stage pressure switch
122 Engine cooling fan low speed relay
123A Engine cooling fan high speed relay
126 Radiator/front cables connection
128 Radiator/front cables connection
129 Power fuse protecting engine cooling fan
154 Engine cooling fan
158 Water temperature sensor for gauge
170 Resistor for engine cooling fan

N.D. Ultrasound-soldered joint taped in wiring loom

4F097N

55 Front left/engine cables connection

1747

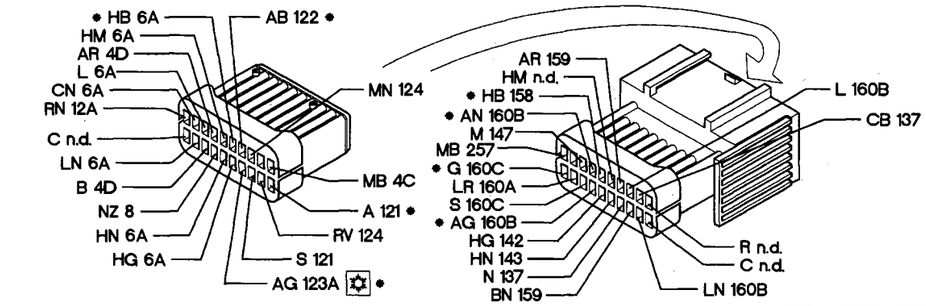

70 Dashboard/front cables connection

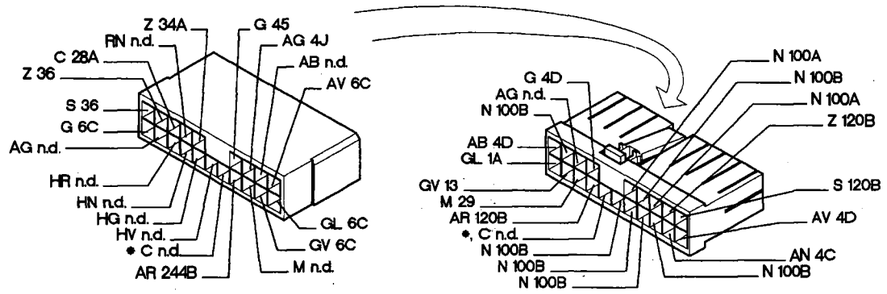

122 Engine cooling fan low speed relay

1747

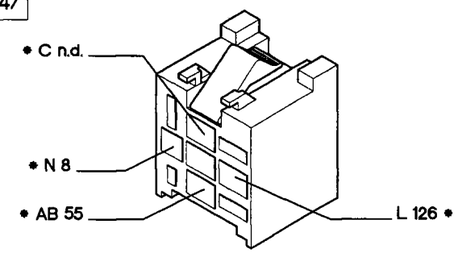

123A Engine cooling fan high speed relay

1747

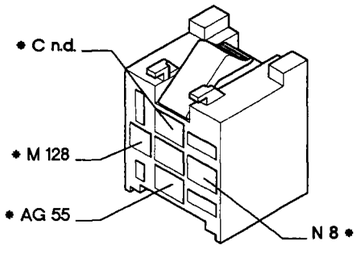

126 Radiator/front cables connection

1747

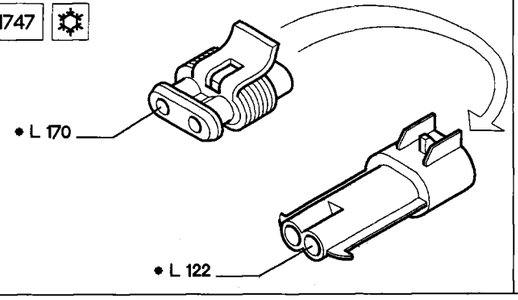

128 Radiator/front cables connection

1747

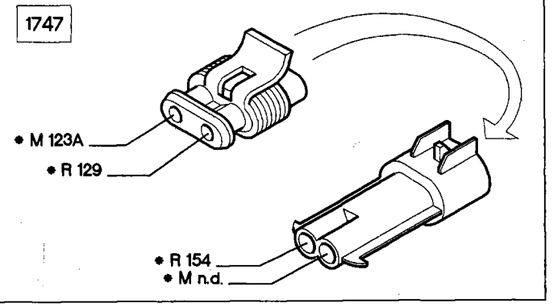

P4F116N01

* The cables involved in the wiring diagram are marked with an asterisk.

4F098N

Versions with air conditioner
Engine cooling system - Engine coolant temperature gauge (1998 engine)

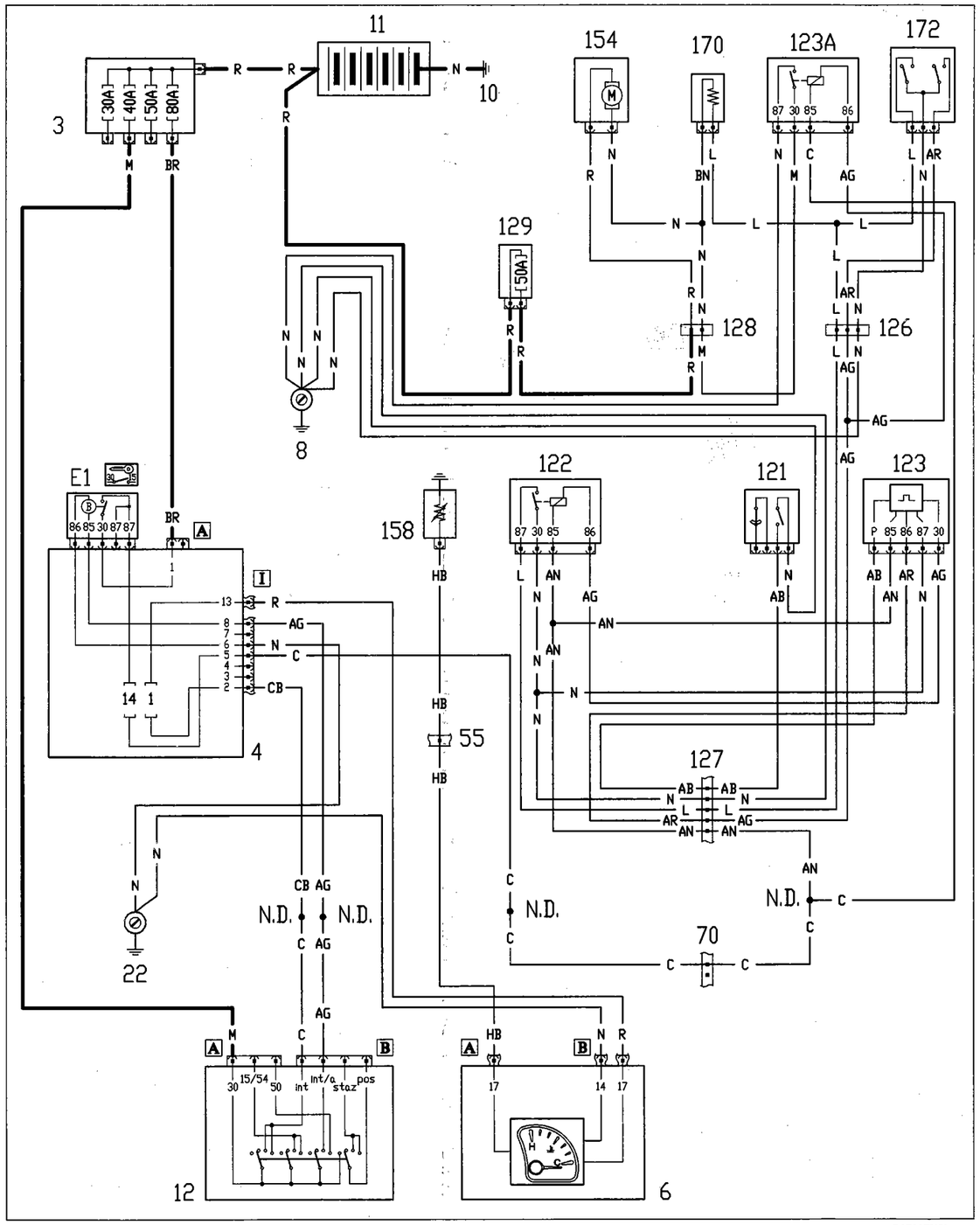

4F099N

Location of components

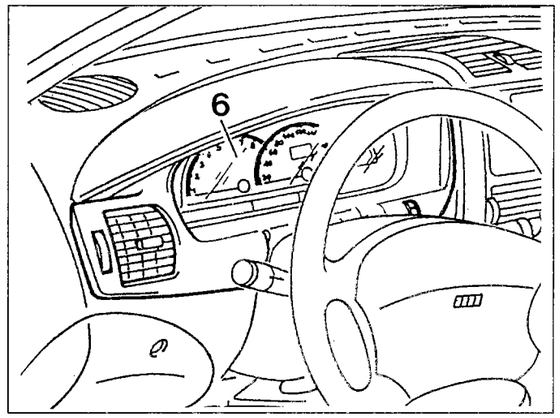

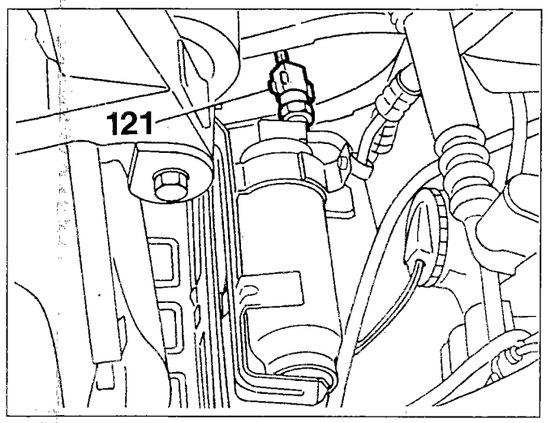

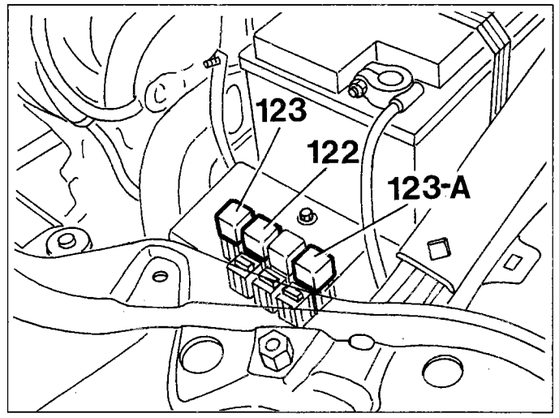

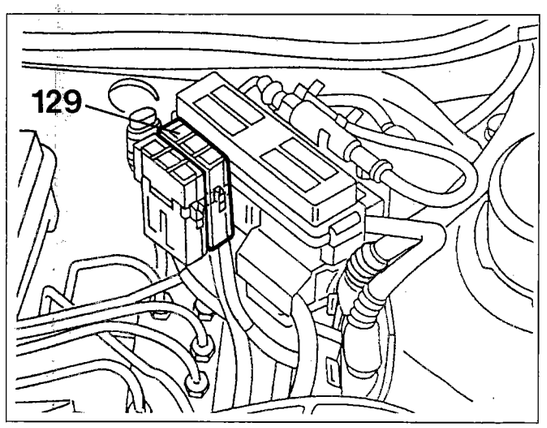

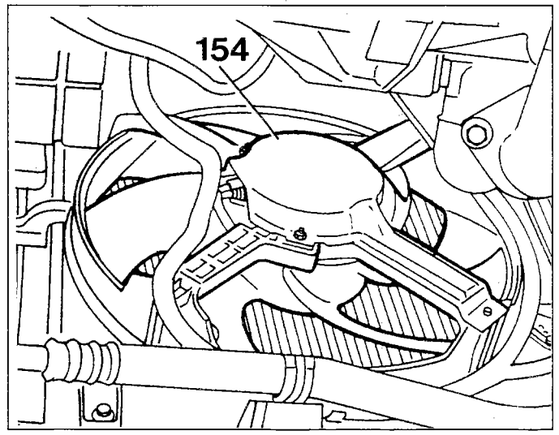

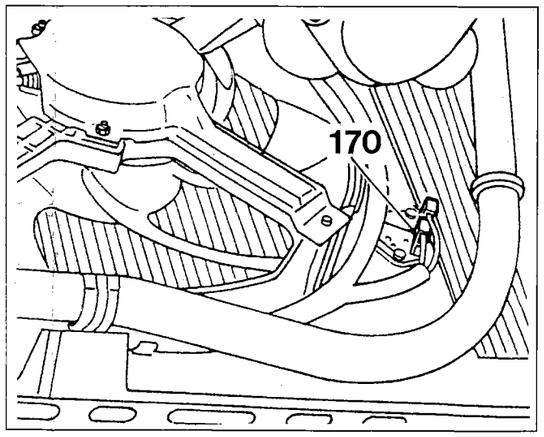

P4F118N01

4F100N

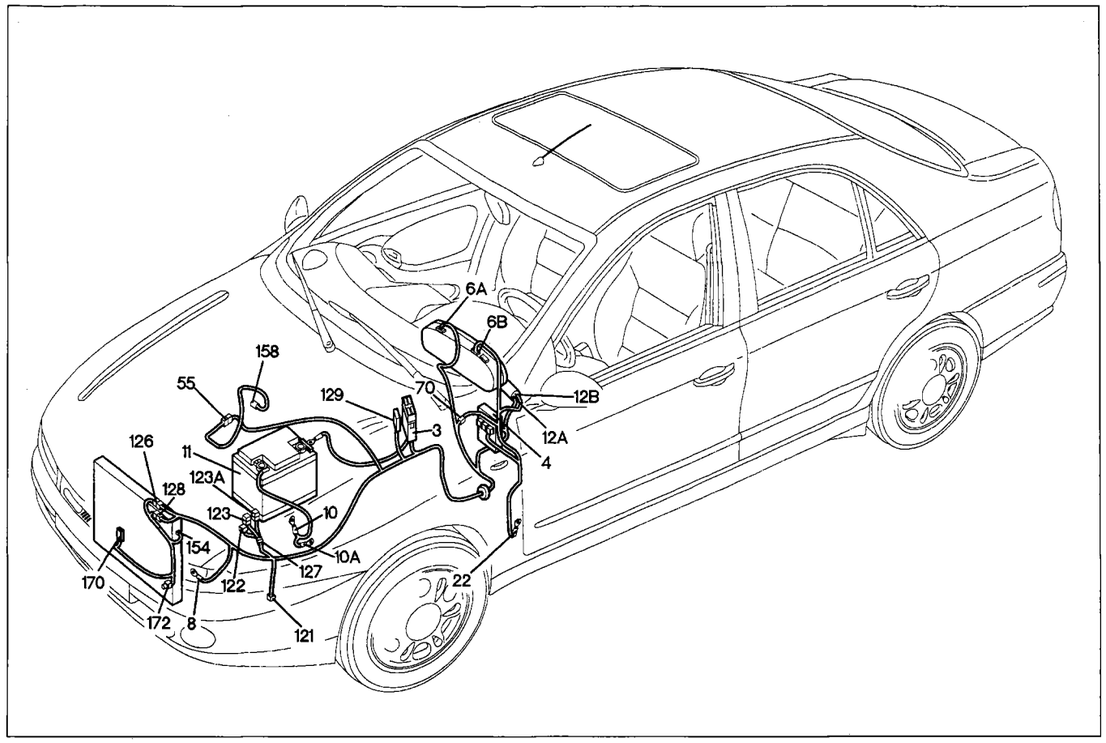

P4F119N01

Versions with air conditioner

Engine cooling system - Engine coolant temperature gauge (1998 engine)

Key to components

3 Power fuse box
4 Fuse and relay unit
6 Instrument panel
8 Front left earth
10 Battery earth on engine
10A Battery earth on body shell
11 Battery
12 Ignition switch
22 Left dashboard earth
55 Front left/engine cables connection
70 Dashboard/front cables connection
121 Three-stage pressure switch
122 Engine cooling fan low speed relay
123 Engine cooling fan high speed timer
123A Engine cooling fan high speed relay
126 Radiator/front cables connection
127 Front left cable/cable on relay bracket connection
128 Radiator/front cables connection
129 Power fuse protecting engine cooling fan
154 Engine cooling fan
158 Water temperature sensor for gauge
170 Resistor for engine cooling fan

N.D. Ultrasound-soldered joint taped in wiring loom

55 Front left/engine cables connection

1998

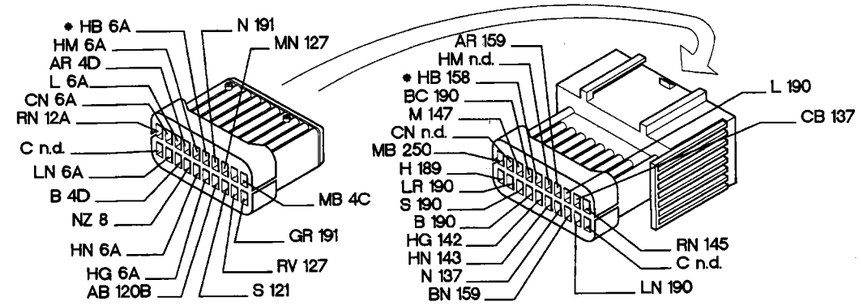

70 Dashboard/front cables connection

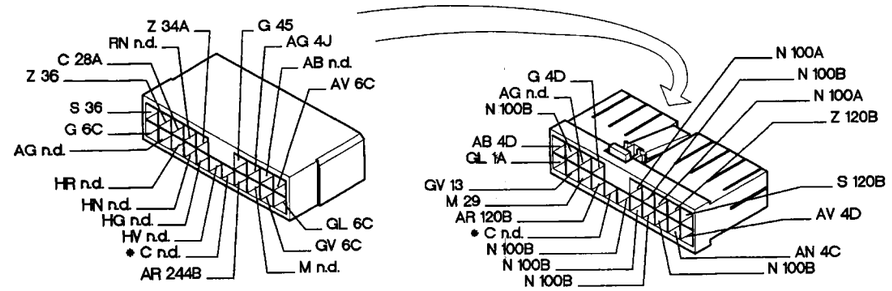

127 Front left cable/cable on relay bracket connection

1998

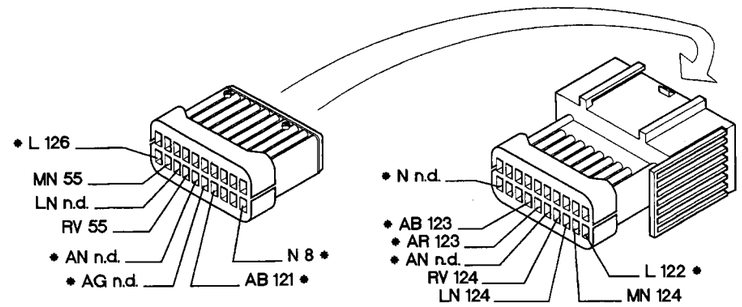

125 Radiator/front cables connection

1998

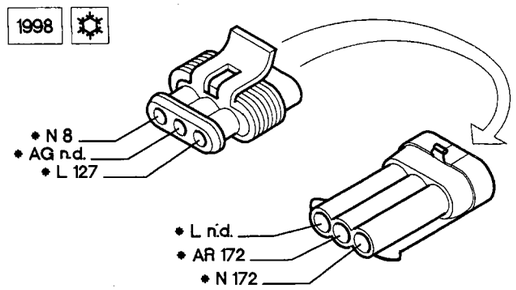

128 Radiator/front cables connection

1998

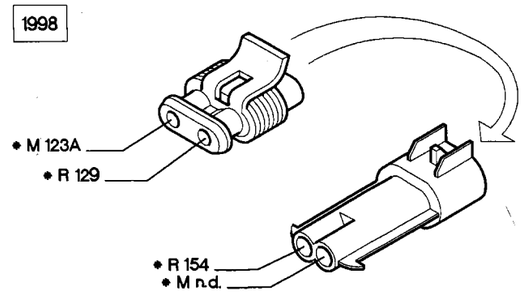

P4F120N01

* The cables involved in the wiring diagram are marked with an asterisk.

4F101N

4F102N

Versions without air conditioner
Engine cooling system - Engine coolant temperature gauge - Manual heater: car interior ventilation (1370-1581-1998 engine)

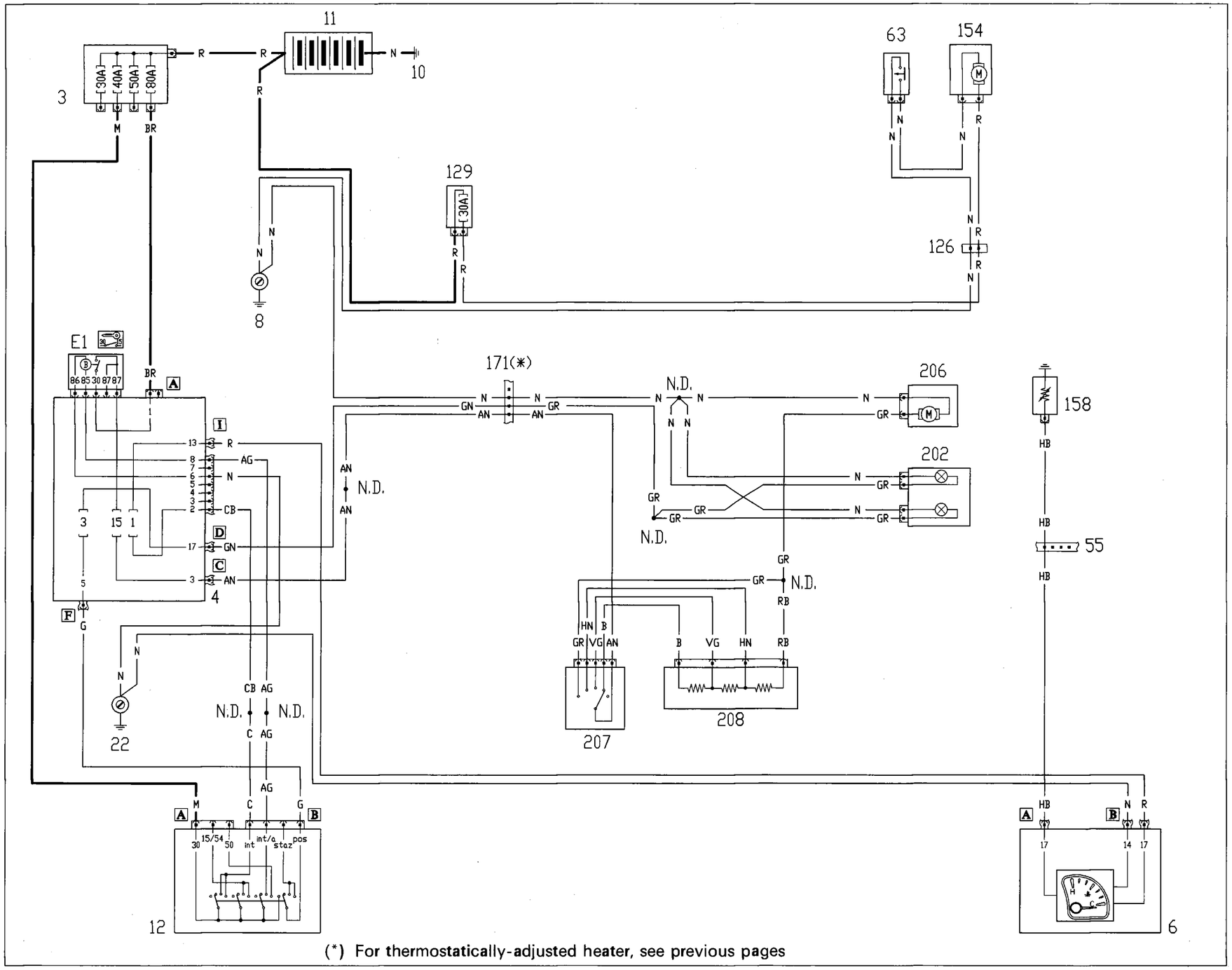

(*) For thermostatically-adjusted heater, see previous pages

4F103N

P4F121N01

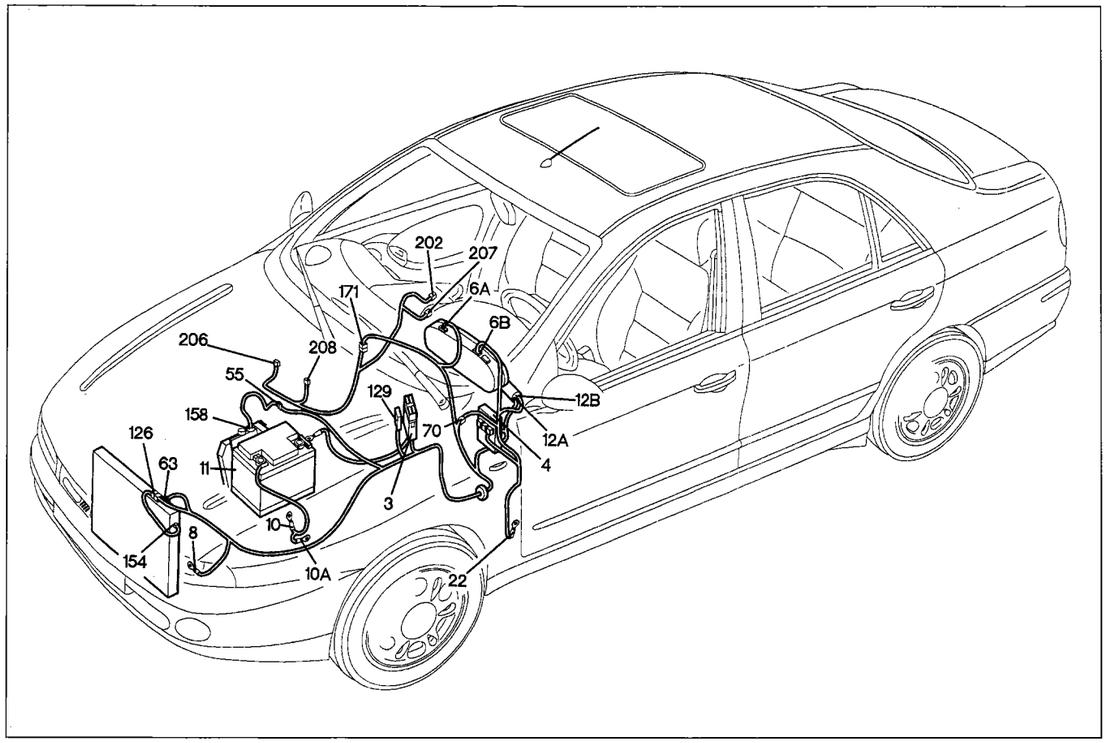

P4F123N01

Versions without air conditioner

Engine cooling system - Engine coolant temperature gauge - Manual heater: car interior ventilation (1370-1581-1998 engine)

Key to components

3 Power fuse box
4 Fuse and relay unit
6 Instrument panel
8 Front left earth
10 Battery earth on engine
10A Battery earth on body shell
11 Battery
12 Ignition switch
22 Left dashboard earth
55 Front left/engine cables connection
63 Thermostat on radiator
70 Dashboard/front cables connection
126 Radiator/front cables connection
129 Power fuse protecting engine cooling fan
154 Engine cooling fan
158 Water temperature sensor for gauge
171 Heater cables connections
202 Light for heater/air conditioner controls symbols
206 Car interior fan
207 Fan speed adjustment switch
208 Fan speed resistor

N.D. Ultrasound-soldered joint taped in wiring loom

4F104N

63 Thermostat on radiator

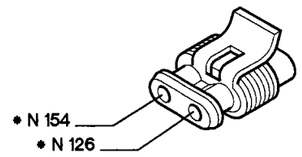

126 Radiator/front cables connection

AUTO

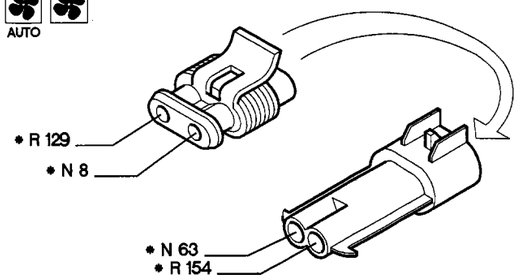

129 Power fuse protecting engine cooling fan

1370
1581
1998

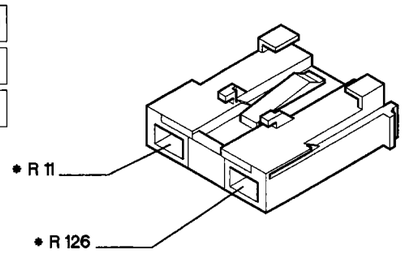

154 Engine cooling fan

AUTO

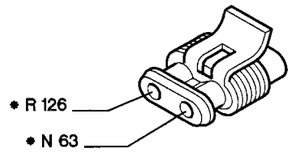

171 Heater cables connection

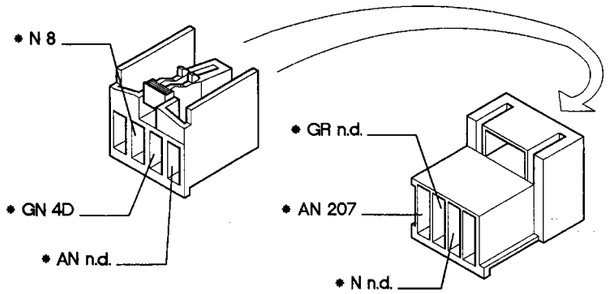

206 Car interior climate control fan

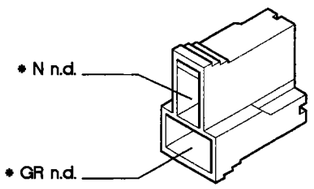

207 Electric fan adjustment switch

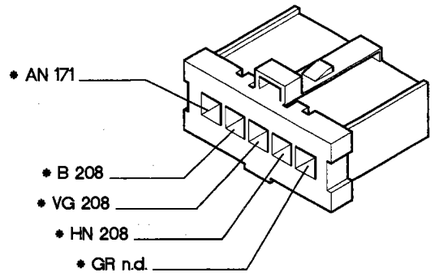

P4F124N01

* The cables involved in the wiring diagram are marked with an asterisk.

4F105N

Versions without air conditioner
Engine cooling system - Engine coolant temperature gauge - Manual heater: car interior ventilation (1747 engine)

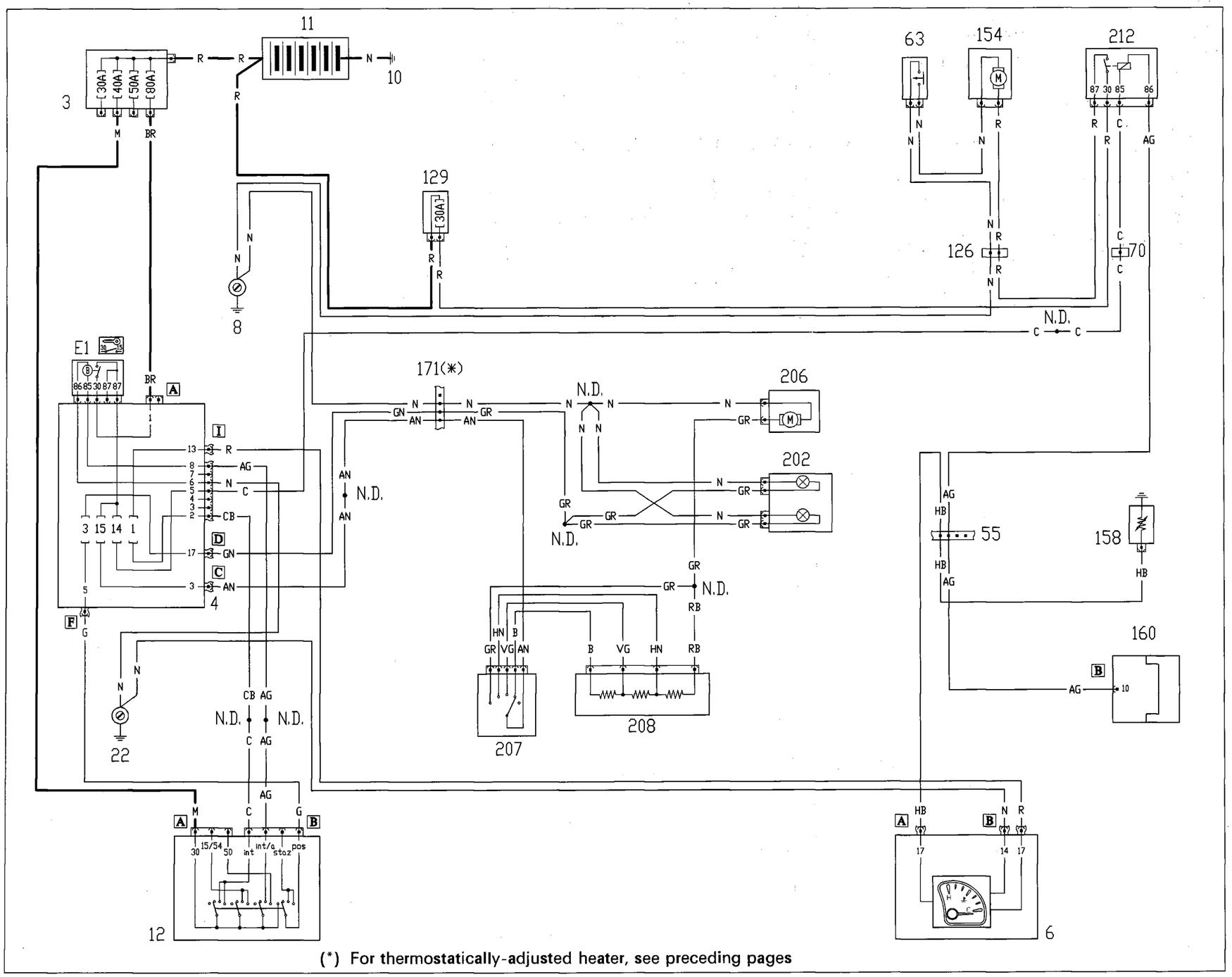

(*) For thermostatically-adjusted heater, see preceding pages

P4F125N01

44106N

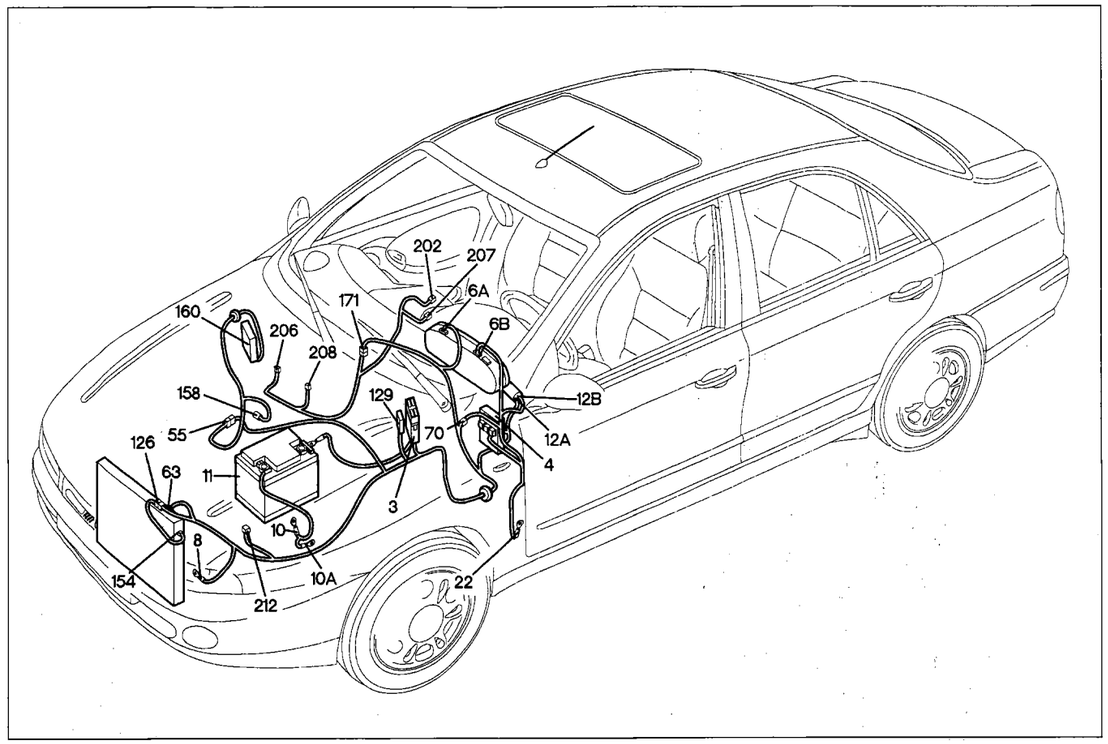

P4F127N01

Versions without air conditioner

Engine cooling system - Engine coolant temperature gauge - Manual heater: car interior ventilation (1747 engine)

Key to components

3 Power fuse box
4 Fuse and relay unit
6 Instrument panel
8 Front left earth
10 Battery earth on engine
10A Battery earth on body shell
11 Battery
12 Ignition switch
22 Left dashboard earth
55 Front left/engine cables connection
63 Thermostat on radiator
70 Dashboard/front cables connection
126 Radiator/front cables connection
129 Power fuse protecting engine cooling fan
154 Engine cooling fan
158 Water temperature sensor for gauge
171 Heater cables connection
202 Bulbs for heater/air conditioner controls symbols
206 Car interior climate control fan
207 Fan speed adjustment switch
208 Fan speed resistor
212 Engine cooling fan relay (1747 engine)

N.D. Ultrasound-soldered joint taped in wiring loom

4F107N

55 Front left/engine cables connection

1747

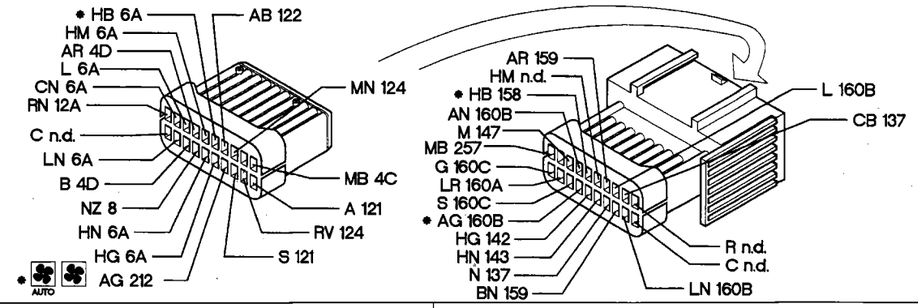

125 Radiator/front cables connection

AUTO

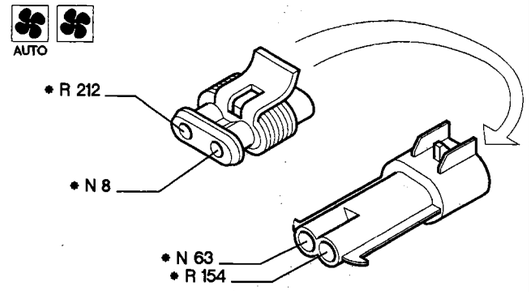

212 Engine cooling fan relay (1747)

1747 AUTO

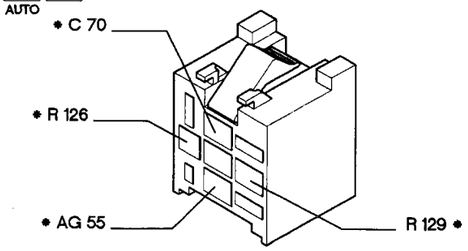

171 Heater cables connection

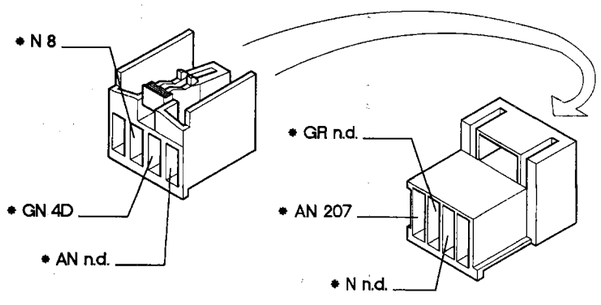

206 Car interior climate control fan

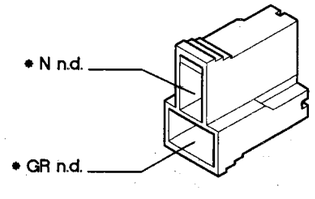

208 Fan speed resistor

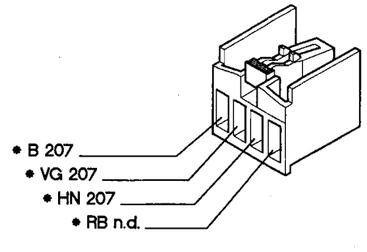

P4F128N01

* The cables involved in the wiring diagram are marked with an asterisk.

4F108N

Anti-lock braking system (A.B.S.) and fault warning light

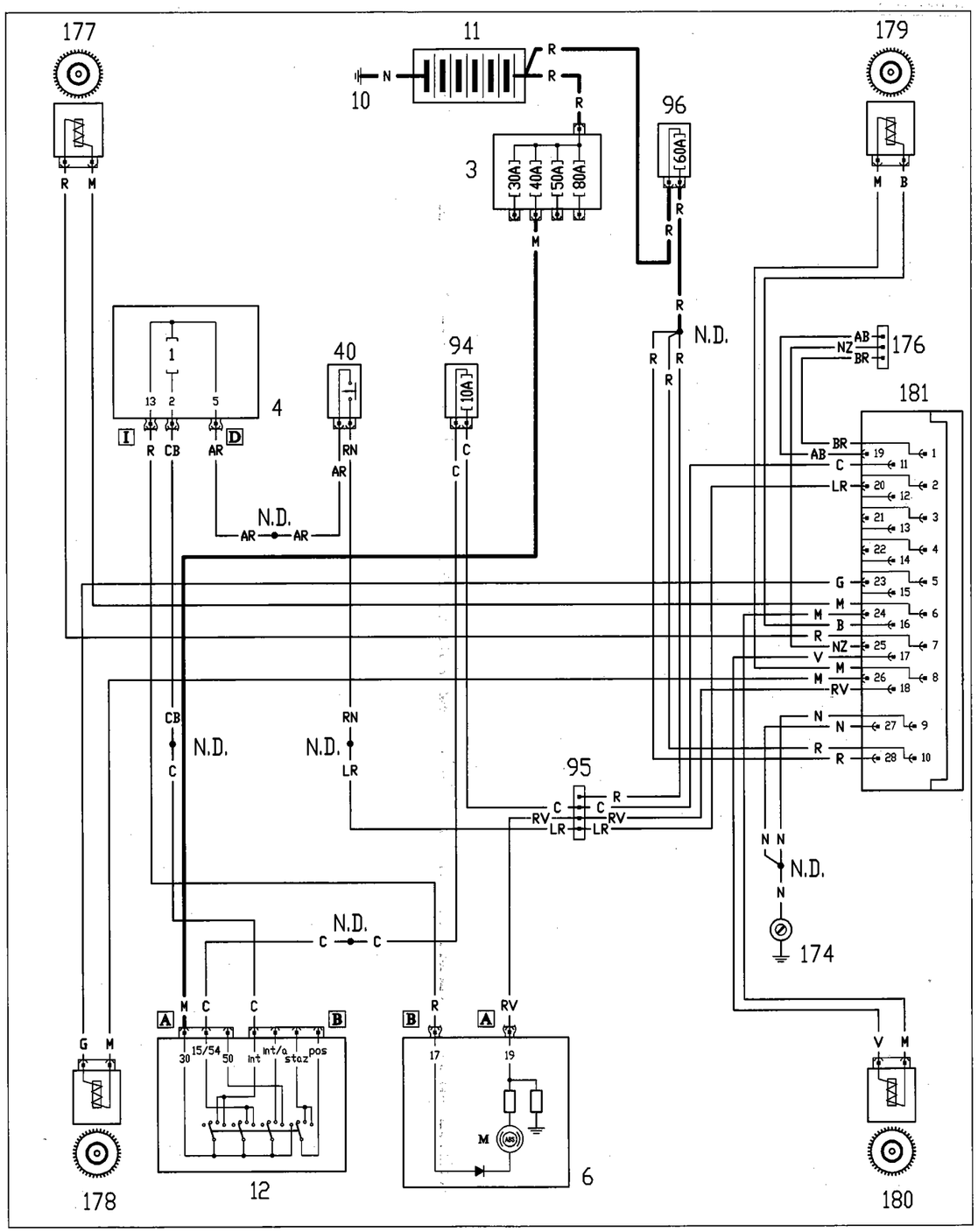

P4F129N01

4F109N

Location of components

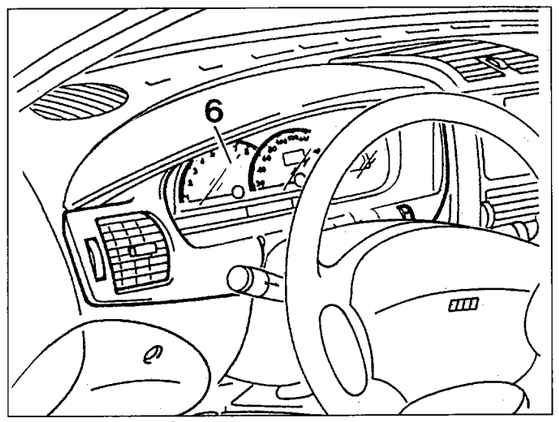

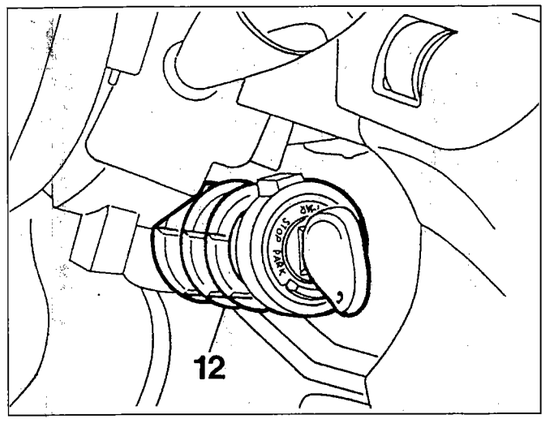

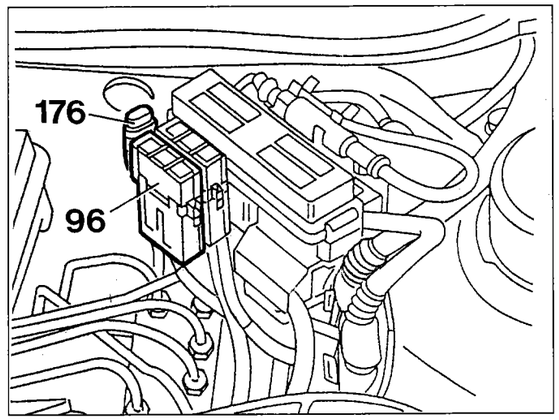

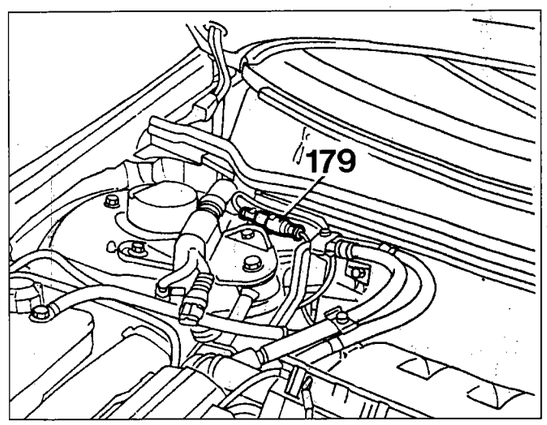

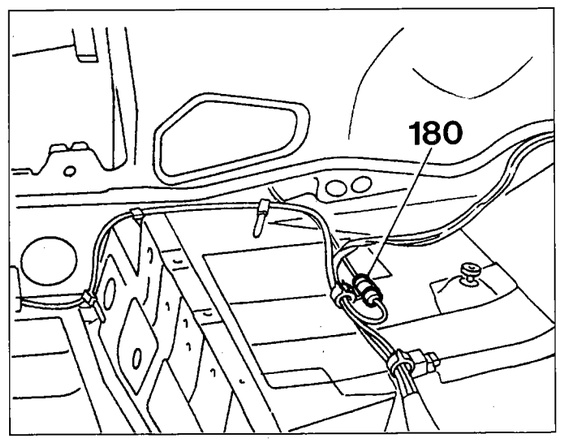

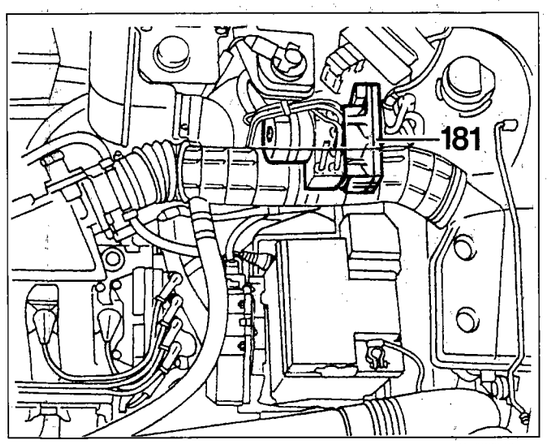

P4F130N01

4F110N

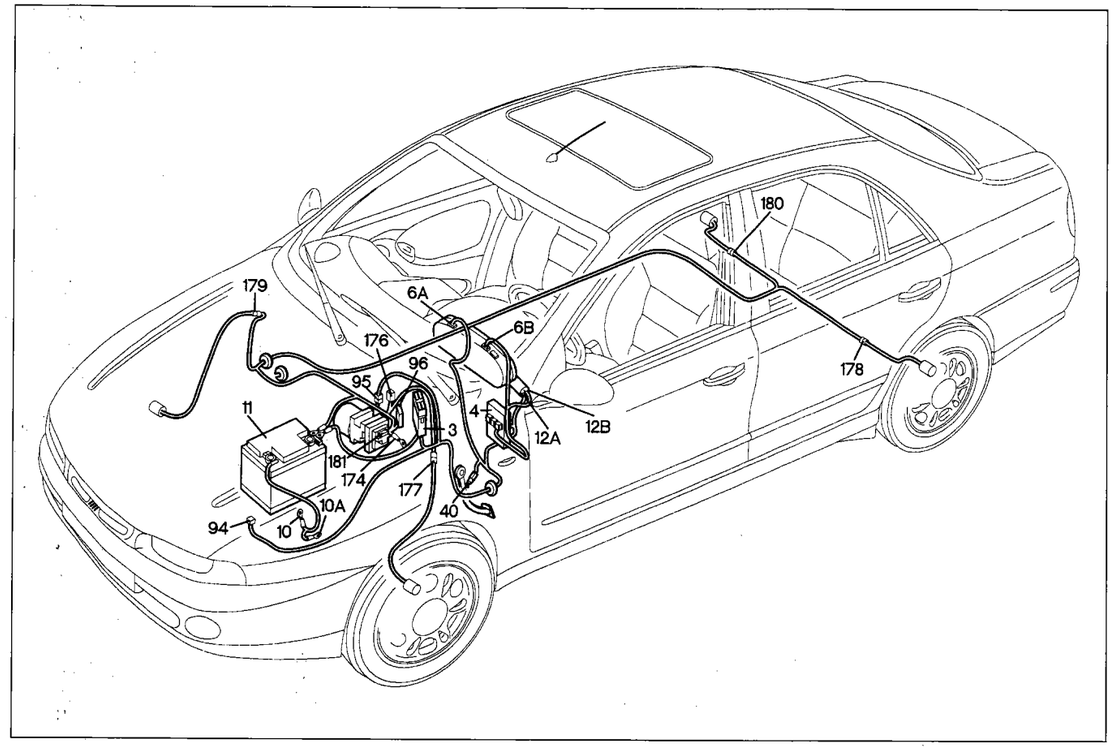

P4F131N01

Anti-lock braking system (A.B.S.) and warning light

Key to components

3 Power fuse box
4 Fuse and relay unit
6 Instrument panel
10 Battery earth on engine
10A Battery earth on body shell
11 Battery
12 Ignition switch
40 Stop lights switch
94 Fuse protecting anti-lock braking system A.B.S.
95 Front cables/anti-lock braking system A.B.S. connection
96 Power fuse protecting A.B.S. electrical system
174 Power fuse for anti-lock braking system (A.B.S.)
176 Diagnostic socket for anti-lock braking system (A.B.S.)
177 Sensor on front left wheel for anti-lock braking system (A.B.S.)
178 Sensor on rear left wheel for anti-lock braking system (A.B.S.)
179 Sensor on front right wheel for anti-lock braking system (A.B.S.)
180 Sensor on rear right wheel for anti-lock braking system (A.B.S.)
181 Electrohydraulic control unit for anti-lock braking system (A.B.S.)
N.D. Ultrasound-soldered joint taped in wiring loom

4F111N

4D Fuse and relay unit

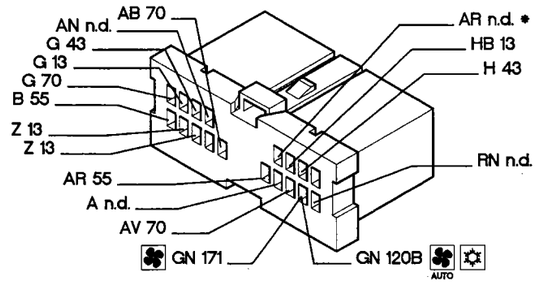

40 Stop lights switch

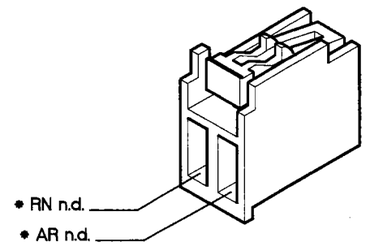

95 Front cables/anti-lock braking system A.B.S. connection

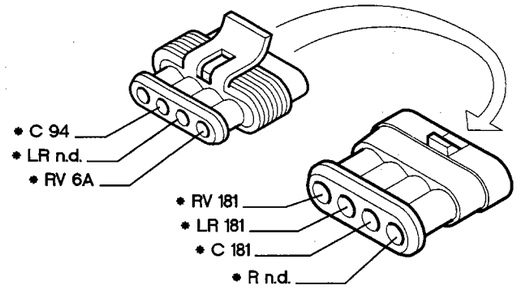

176 Diagnostic socket for ABS device (A.B.S.)

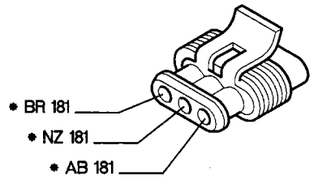

181 Electrohydraulic control unit for anti-lock braking system (A.B.S.)

1	* BR 176	18	* RV 95
6	* M 177	19	* AB 176
7	* R 177	20	* LR 95
8	* M 179	23	* G 178
9	* N n.d.	24	* M 180
10	* R n.d.	25	* NZ 176
11	* C 95	26	* M 178
16	* B 179	27	* N n.d.
17	* V 180	28	* R n.d.

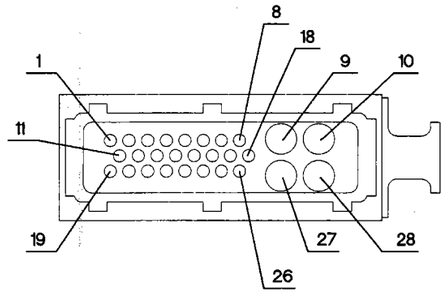

P4F132N01

* The cables involved in the wiring diagram are marked with an asterisk.

4F112N

Starting system - Electronic ignition and fuel injection - Recharging system and warning light - Low engine oil pressure warning light - Fuel injection fault warning light (1370 engine)

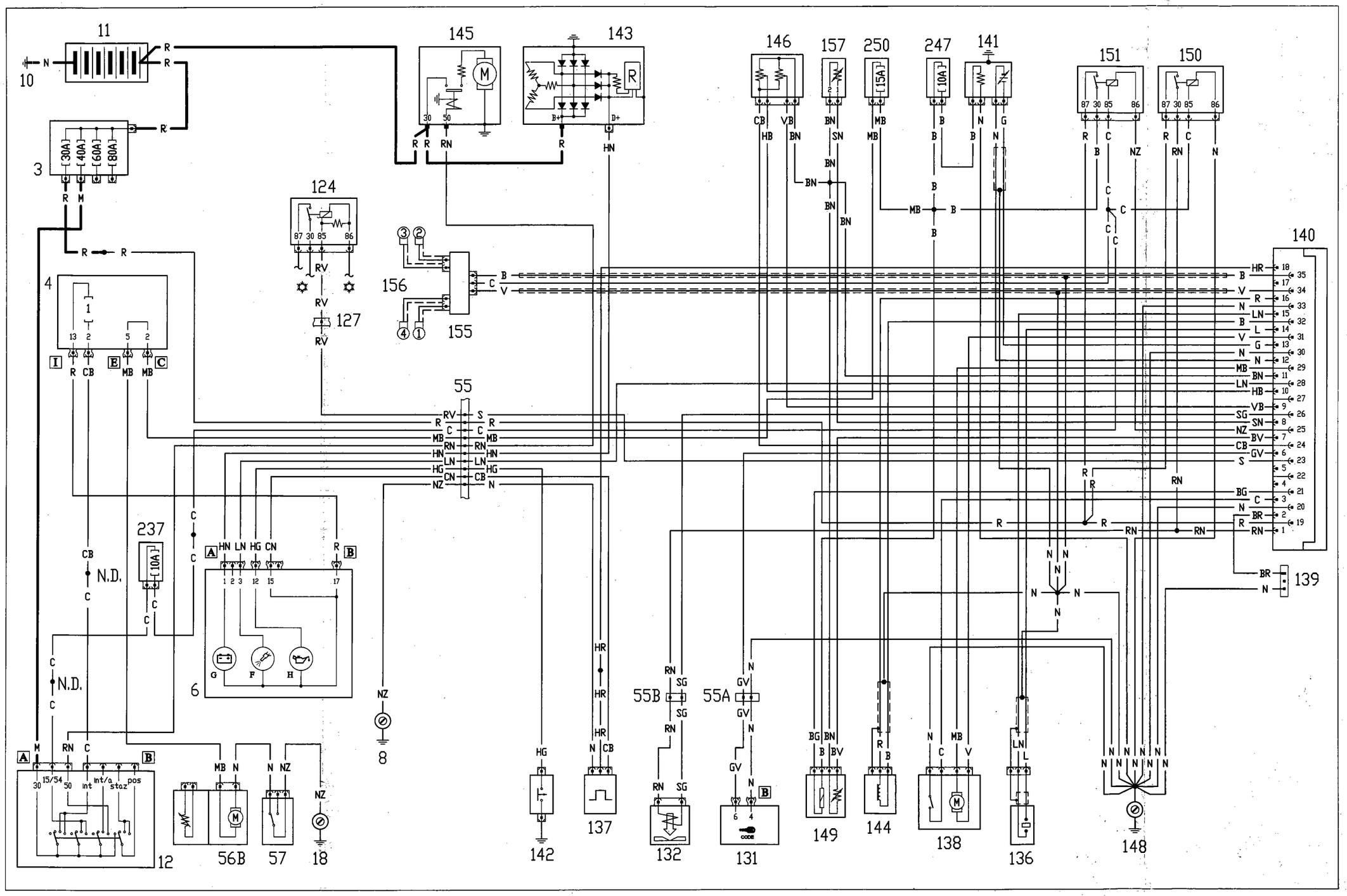

4F113N

55.

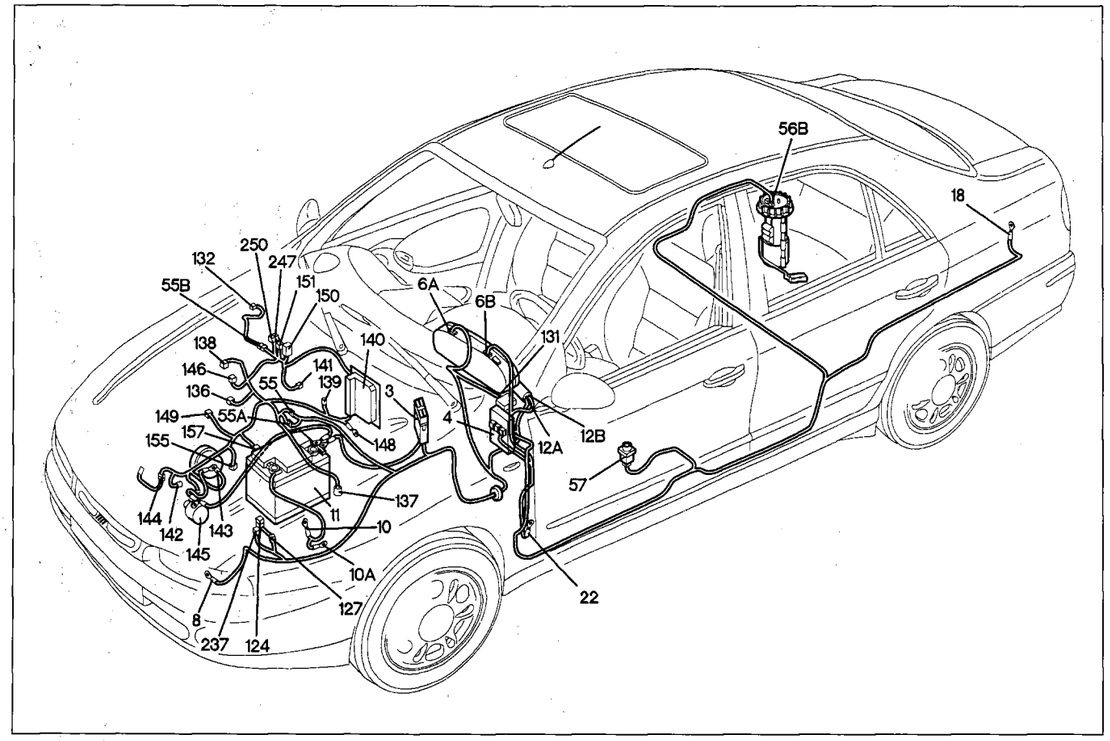

P4F135N01

Starting system - Electronic ignition and fuel injection - Recharging system and warning light - Low engine oil pressure warning light - Fuel injection fault warning light (1370 engine)

Key to components

3 Power fuse box
4 Fuse and relay unit
6 Instrument panel
8 Front left earth
10 Battery earth on engine
10A Battery earth on body shell
11 Battery
12 Ignition switch
18 Rear left earth
55 Front left/engine cables connection
55A Front left/engine cables connection
55B Front right/engine cables connection
56 Fuel gauge sender unit
57 Inertial switch
124 Air conditioner compressor control relay
127 Front left cable/cable on relay bracket connection
131 Fiat CODE electronic control unit
132 Petrol vapour cut-off solenoid
136 Knock sensor
137 Car speed sensor
138 Idle adjustment actuator (1370-1581)
139 Diagnostic socket for fuel injection
140 Fuel injection/ignition control unit (1370)
141 Heated Lambda probe
142 Low oil pressure warning light switch
143 Alternator
144 Rpm and T.D.C. sensor
145 Starter motor
146 Potentiometer on throttle valve
148 Earth for electronic fuel injection
149 Instrumented injector (1370)
150 Fuel injection control relay (1370-1747-1998)
151 Lambda probe relay, fuel pump, fuel injectors (1370 - 1998)
155 Ignition coils assembly (1370-1581)
157 Water temperature sensor for fuel injection
237 FIAT CODE fuse
247 Lambda probe fuse (1370 - 1998)
250 Fuel pump fuse (1370-1747-1998)

N.D. Ultrasound-soldered joint taped in wiring loom

4F114N

55 Front left/engine cables connection

1370

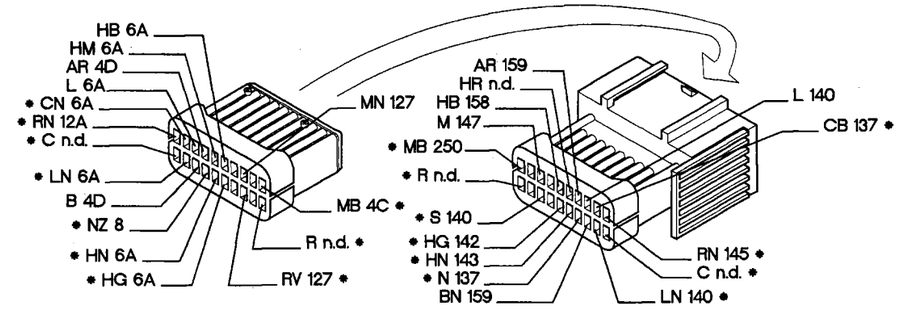

55A Front left/engine cables connection

1370

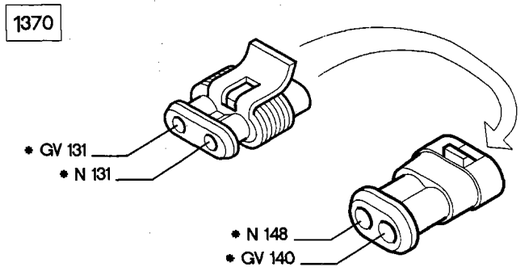

55B Front right/engine cables connection

1370

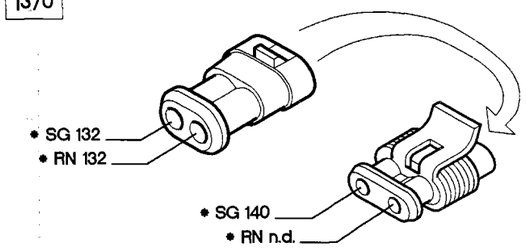

140 Fuel injection/ignition control unit (1370)

1370

1	• RN n.d.	16	• R 144	31	• V 138
2	• BR 55A	17	• L 55	32	• B 144
3	• C 138	18	• HR n.d.	33	• N 148
6	• GV 55A	19	• R n.d.	34	• V 155
7	• BV 149	20	• N 148	35	• B 155
8	• SN 157	21	• BG 149		
9	• VB 146	23	• S 55		
10	• HB 146	24	• CB 146		
11	• BN n.d.	25	• NZ 151		
12	• N 141	27	• SG 55B		
13	• G 141	28	• LN 55		
14	• L 136	29	• MB 138		
15	• LN 136	30	• N 148		

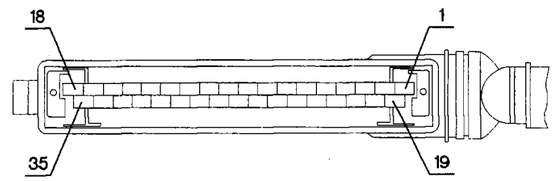

P4F136N01

* The cables involved in the wiring diagram are marked with an asterisk.

4F115N

Starting - Electronic ignition and fuel injection - Recharging and warning light - Low engine oil pressure warning light - Fuel injection fault warning light (1370 engine)

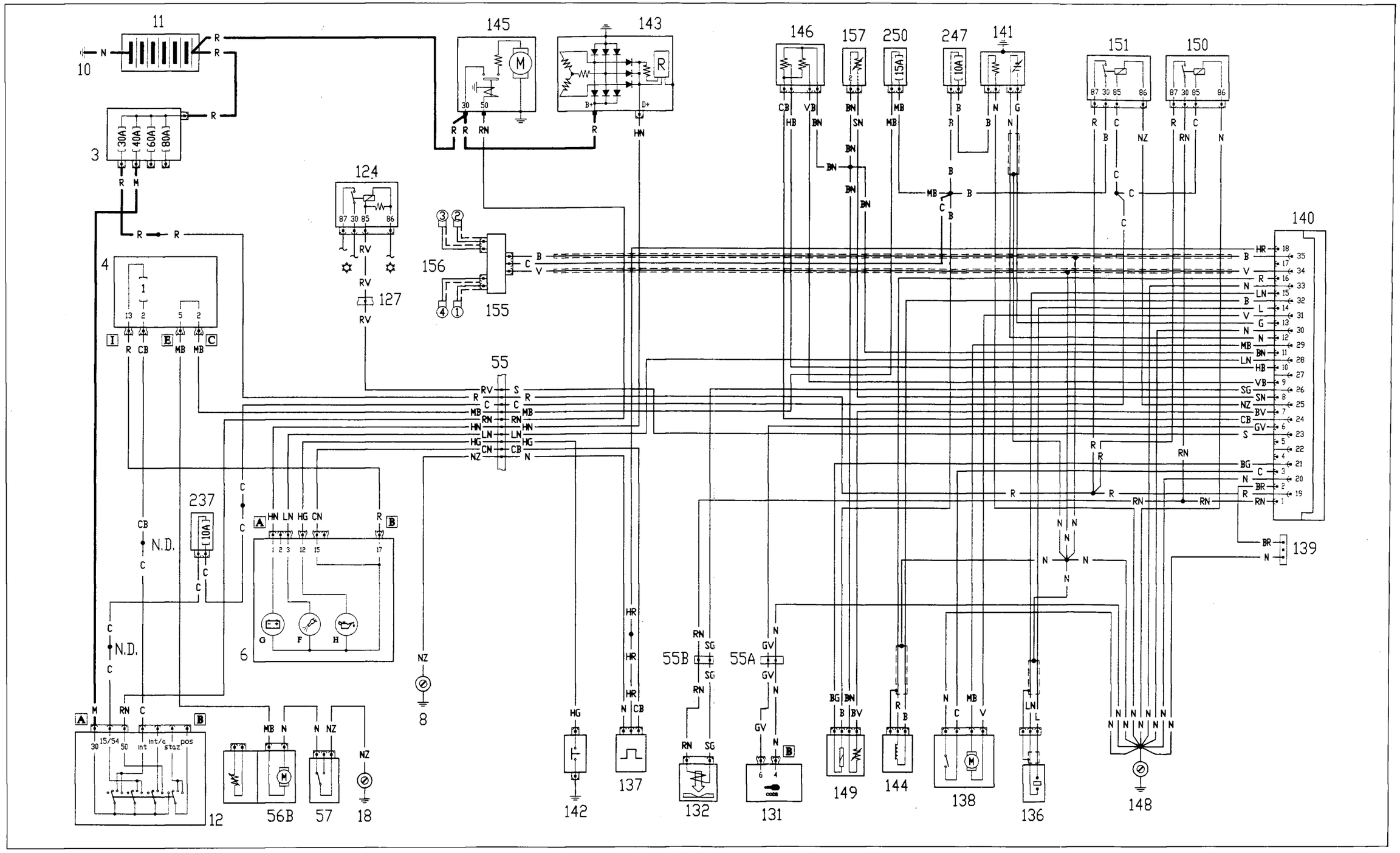

4F198N

55.

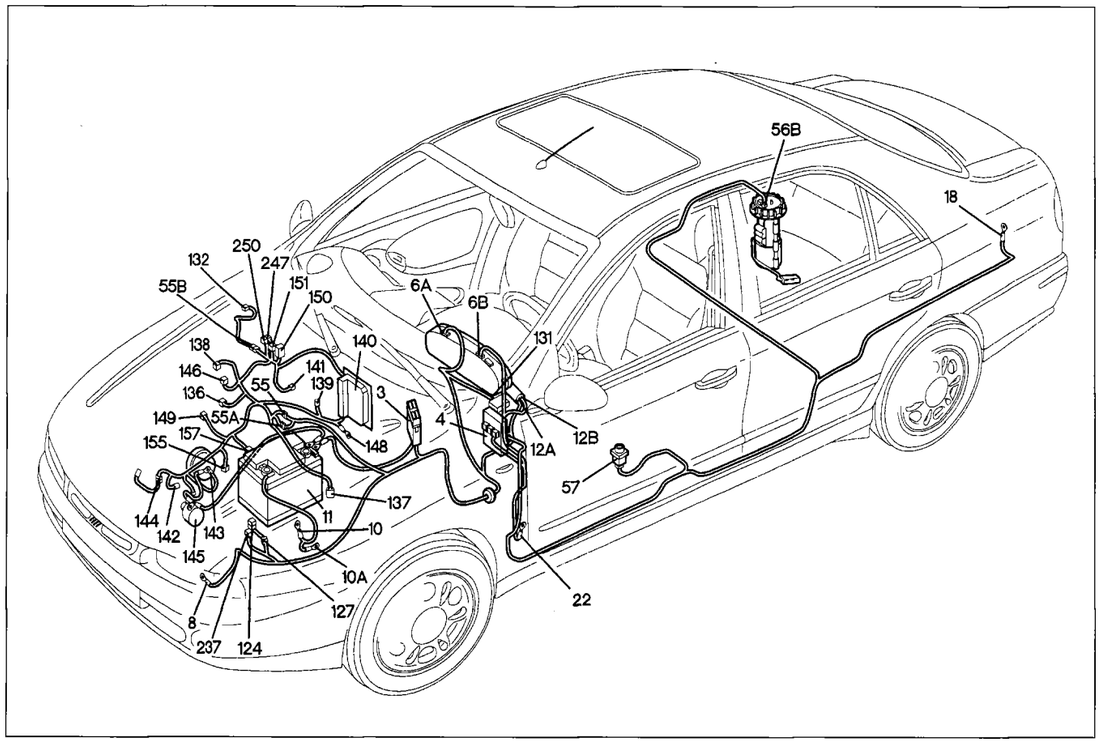

P4F135N01

Starting - Electronic ignition and fuel injection - Recharging and warning light - Low engine oil pressure warning light - Fuel injection fault warning light (1370 engine

Key to components

3 Power fuse box
4 Fuse and relay unit
6 Instrument panel
8 Front left earth
10 Battery earth on engine
10A Battery earth on body shell
11 Battery
12 Ignition switch
18 Rear left earth
55 Connection between front left/engine cables
55A Connection between front left/engine cables
55B Front right/engine cables connection
56 Fuel gauge control unit

57 Inertial switch
124 Air conditioner compressor control relay

127 Connection between front left cable/cable on relay cable
131 Fiat CODE electronic control unit
132 Petrol vapours cut-off solenoid
136 Knock sensor
137 Car speed sensor
138 Idle adjustment actuator (1370-1581)

139 Diagnostic socket for fuel injection

140 Fuel injection/ignition control unit (1370)

141 Heated Lambda probe
142 Low oil pressure warning light switch

143 Alternator
144 Rpm and TDC sensor
145 Starter motor
146 Potentiometer on throttle valve
148 Earth for electronic fuel injection
149 Instrumented fuel injector (1370)
150 Fuel injection relay (1370-1747-1998)

151 Relay controlling lambda probe, electric fuel pump, fuel injectors (1370 - 1998)

155 Ignition coils assembly (1370-1581)
157 Water temperature sensor for fuel injection

237 FIAT CODE fuse
247 Lambda probe fuse (1370 - 1998)

250 Fuel pump fuse (1370-1747-1998)

N.D. Ultrasound-soldered joint taped in wiring loom

4F199N

55 Front left/engine cables connection

1370

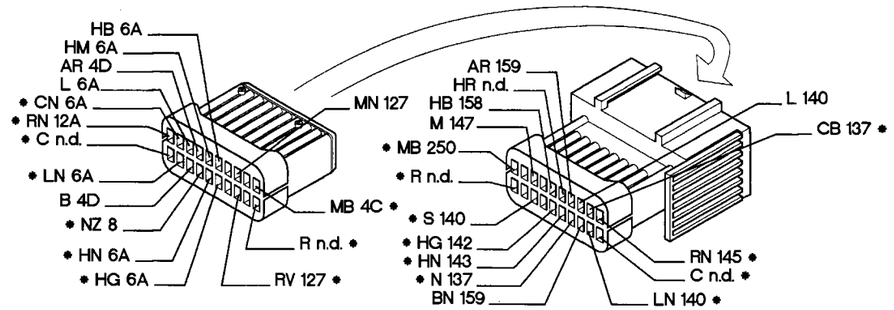

55A Front left/engine cables connection

1370

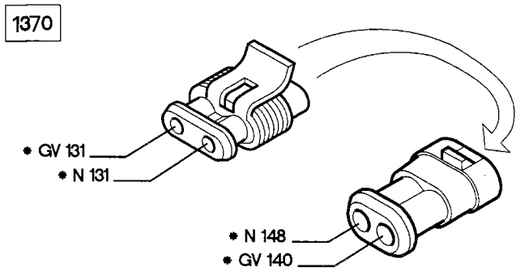

55B Front right/engine cables connection

1370

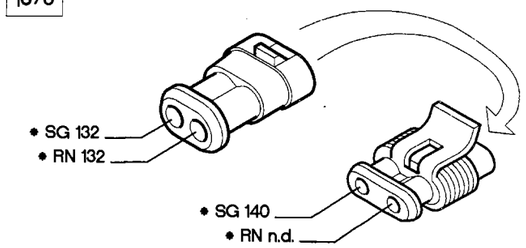

140 Fuel injection/ignition control unit (1370)

1370

1	• RN n.d.	16	• R 144	31	• V 138
2	• BR 55A	17	• L 55	32	• B 144
3	• C 138	18	• HR n.d.	33	• N 148
6	• GV 55A	19	• R n.d.	34	• V 155
7	• BV 149	20	• N 148	35	• B 155
8	• SN 157	21	• BG 149		
9	• VB 146	23	• S 55		
10	• HB 146	24	• CB 146		
11	• BN n.d.	25	• NZ 151		
12	• N 141	27	• SG 55B		
13	• G 141	28	• LN 55		
14	• L 136	29	• MB 138		
15	• LN 136	30	• N 148		

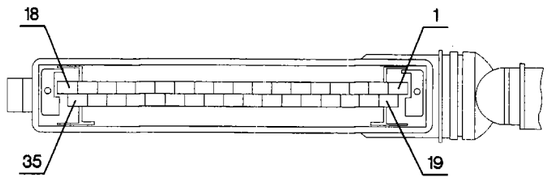

P4F136N01

* The wires involved in the wiring diagram are marked with an asterisk.

4F200N

55.

Starting system - Electronic ignition and fuel injection - Recharging system and warning light - Low engine oil pressure warning light - Fuel injection fault warning light (1581 engine)

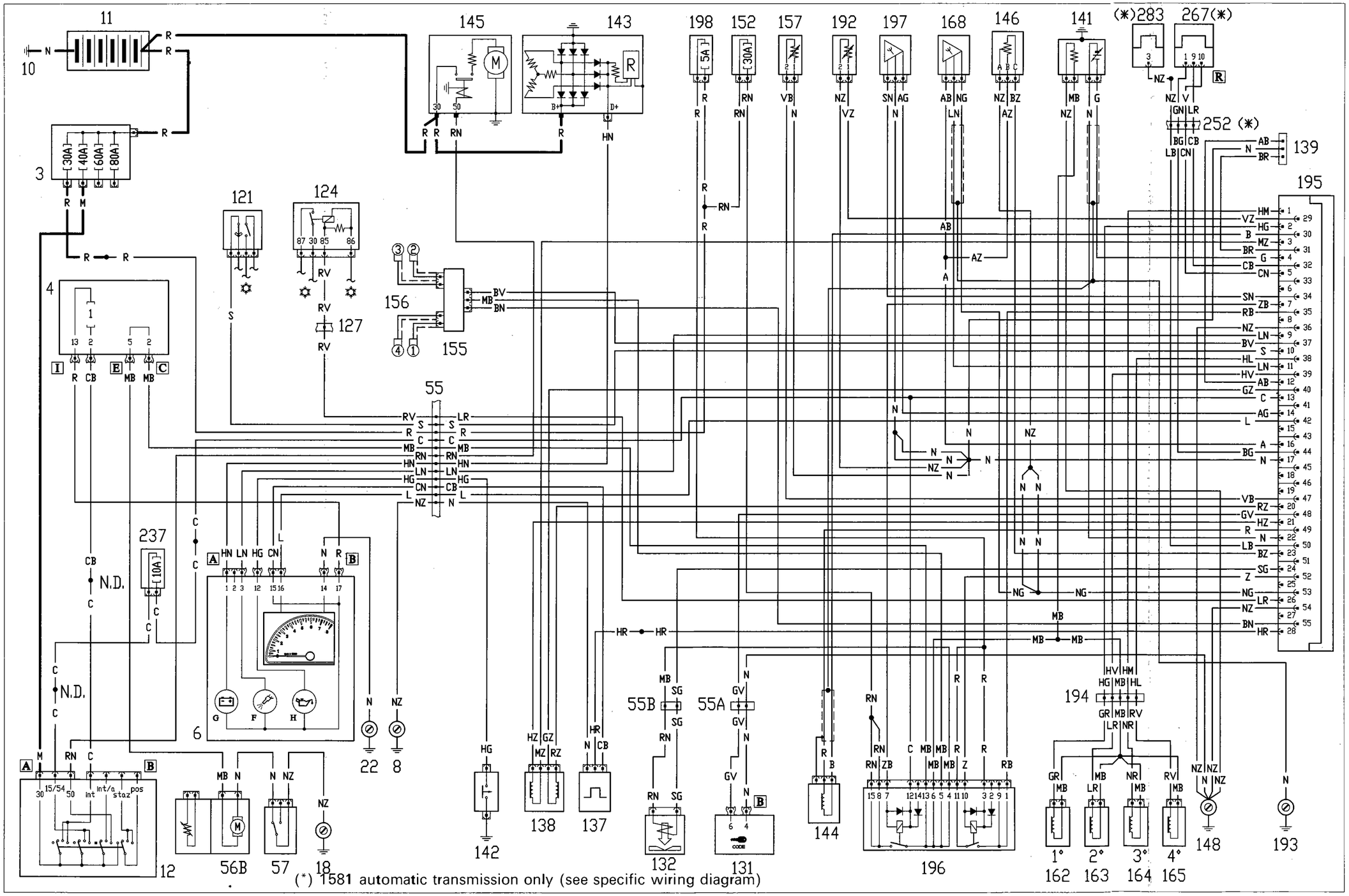

55.

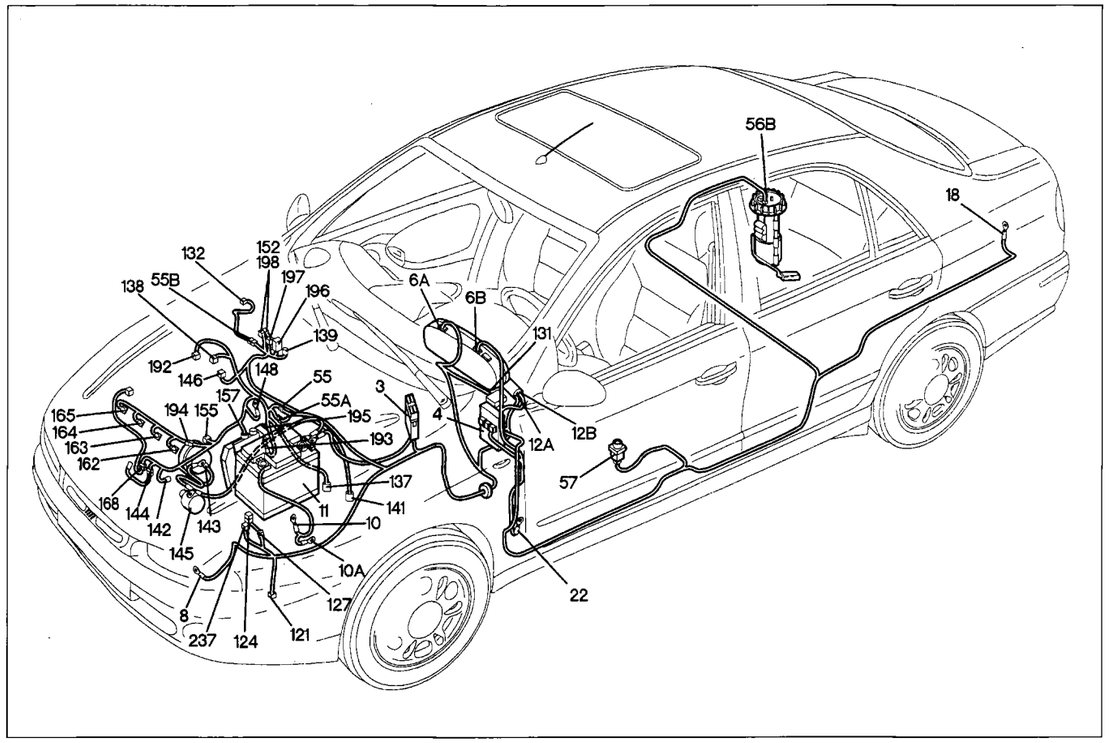

P4F139N01

Starting system - Electronic ignition and fuel injection - Recharging system and warning light - Low engine oil pressure warning light - Fuel injection fault warning light (1581 engine)

Key to components

3 Power fuse box
4 Fuse and relay unit
6 Instrument panel
8 Front left earth
10 Battery earth on engine
10A Battery earth on body shell
11 Battery
12 Ignition switch
18 Rear left earth
22 Left dashboard earth
55 Front left/engine cables connection
55A Front left/engine cables connection
55B Front right/engine cables connection
56 Fuel gauge sender unit
57 Inertial switch
121 Three-stage pressure switch
124 Air conditioner compressor relay
127 Front left cable/cable on relay bracket connection
131 Fiat CODE electronic control unit
132 Petrol vapour cut-off solenoid
137 Vehicle speed sensor
138 Idle adjustment actuator (1370-1581)
139 Diagnostic socket for fuel injection
141 Heated Lambda probe
142 Low oil pressure warning light switch
143 Alternator
144 Rpm and TDC sensor
145 Starter motor
146 Potentiometer on throttle valve
148 Earth for electronic fuel injection
152 Fuse protecting fuel injection (1581 - 1747)
155 Ignition coils assembly (1370-1581)
157 Water temperature sensor for fuel injection
162 Fuel injector (1st)
163 Fuel injector (2nd)
164 Fuel injector (3rd)
165 Fuel injector (4th)
168 Timing sensor
192 Air temperature sensor
193 Earth for electronic fuel injection (1581)
194 Fuel injection cables/injector flange connection (1581)
195 Ignition/fuel injection electronic control unit (1581)
196 Multiple relay (1581)
197 Absolute pressure sensor (1581)
198 Fuse protecting ignition/fuel injection control unit (1581)
237 Fiat CODE fuse

N.D. Ultrasound-soldered joint taped in wiring loom

4F117N

55 Front left/engine cables connection

1581

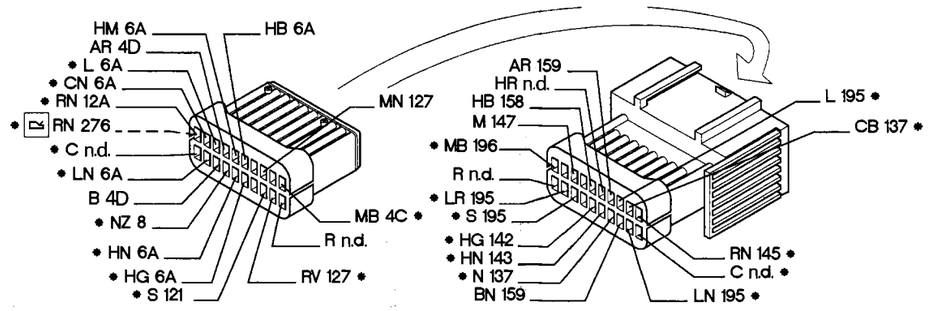

55A Front left/engine cables connection

1581

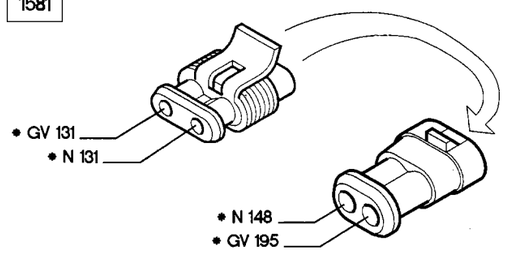

55C Front left/engine cables connection

1581

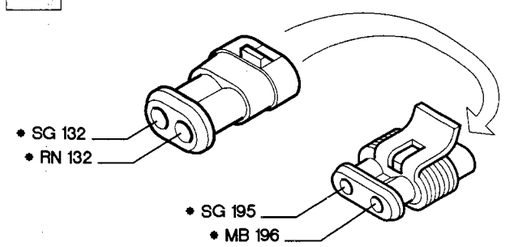

195 Ignition/fuel injection electronic control unit (1581)

1581

1	• HM 194	21	• HZ 138	39	• HV 194
2	• HG 194	22	• N 141	40	• GZ 138
3	• MZ 138	23	• BZ 146	42	• L 55
4	• G 141	24	• SG 55B	44	• BG 252
5	• CN 252	26	• LR 55	47	• VB 157
7	• ZB 196	28	• HR n.d.	48	• GV 55A
9	• LN 55	29	• VZ 192	49	• R 144
10	• S 55	30	• B 144	50	• LB 252
11	• LN 168	31	• BR 139	52	• Z 196
12	• AB 139	32	• CB 252	53	• NG n.d.
13	• C n.d.	34	• SN 197	54	• NZ 148
14	• AG 197	35	• RB 196	55	• BN 155
16	• A n.d.	36	• NZ 148		
17	• N n.d.	37	• BV 155		
20	• RZ 138	38	• HL 194		

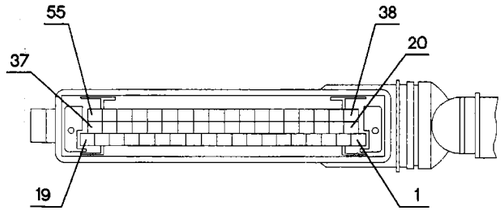

P4F140N01

* The cables involved in the wiring diagram are marked with an asterisk.

4F118N

Starting system - Electronic ignition and fuel injection - Recharging system and warning light - Low engine oil pressure warning light - Fuel injection fault warning light (1747 engine)

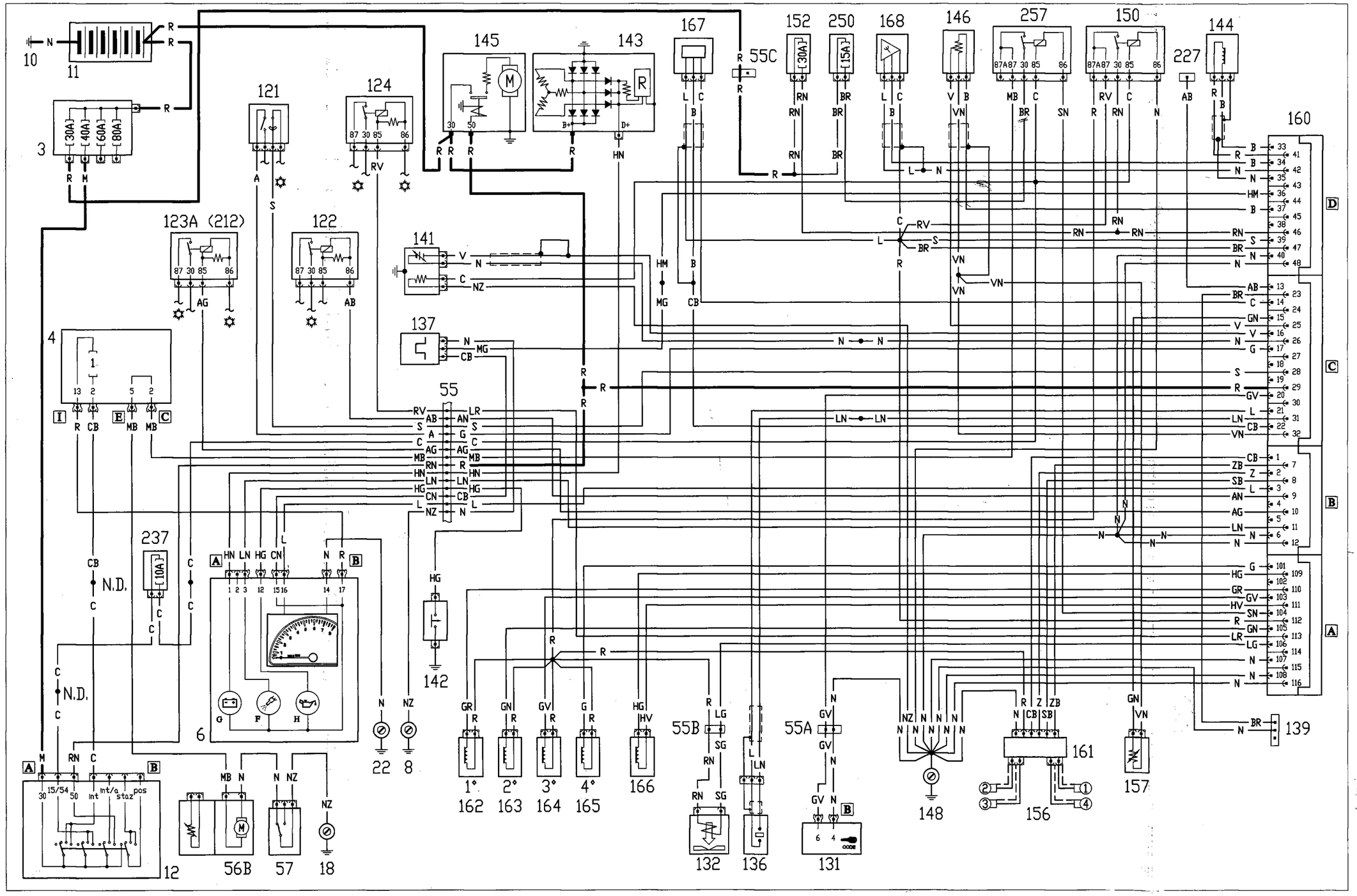

4F119N

55.

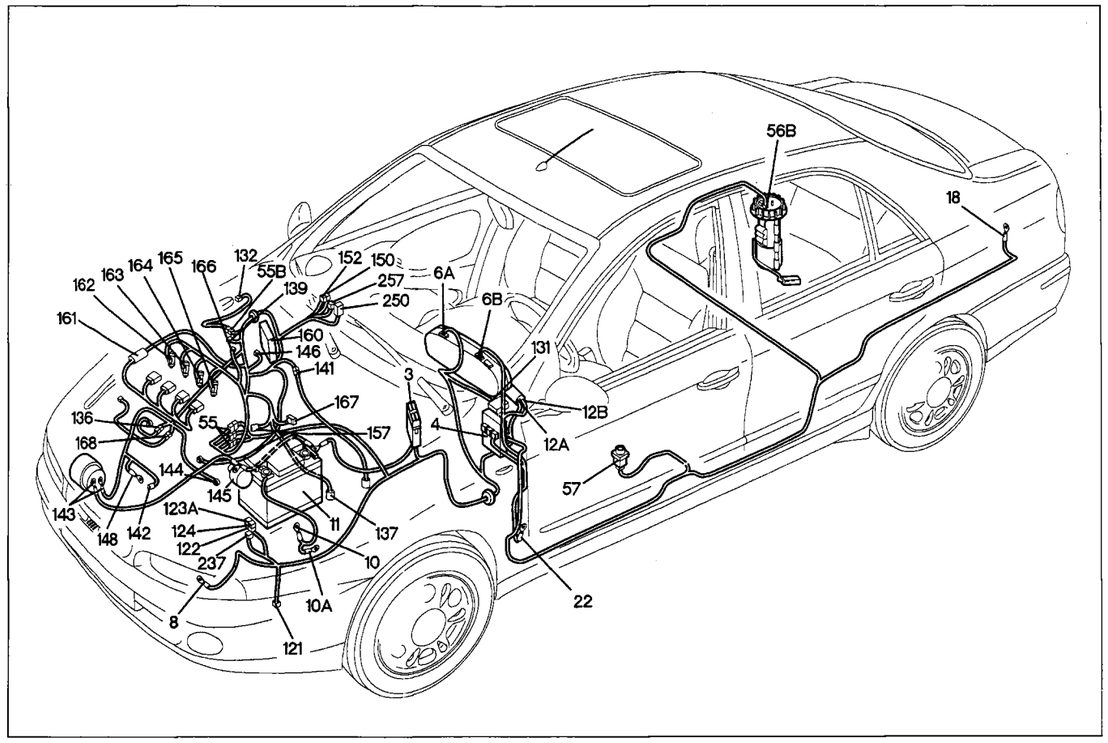

P4F143N01

Starting system - Electronic ignition and fuel injection - Recharging system and warning light - Low engine oil pressure warning light - Fuel injection fault warning light (1747 engine)

Key to components

3 Power fuse box
4 Fuse and relay unit
6 Instrument panel
8 Front left earth
10 Battery earth on engine
10A Battery earth on body shell
11 Battery
12 Ignition switch
18 Rear left earth
22 Left dashboard earth
55 Front left/engine cables connection
55A Front left/engine cables connection
55B Front right/engine cables connection
55C Front left/engine cables connection
56 Fuel gauge sender unit
57 Inertial switch
121 Three-stage pressure switch
122 Engine cooling fan low speed relay
123A Engine cooling fan high speed relay
124 Air conditioner compressor relay
131 Fiat CODE electronic control unit
132 Fuel vapour cut-off solenoid
136 Knock sensor
137 Car speed sensor
139 Diagnostic socket for fuel injection
142 Low oil pressure warning light switch
143 Alternator
144 Rpm and TDC sensor
145 Starter motor
146 Potentiometer on throttle valve
148 Earth for electronic fuel injection
150 Fuel injection relay (1370 - 1747 - 1998)
152 Fuse protecting fuel injection (1581 - 1747)
157 Water temperature sensor for fuel injection
160 Ignition/fuel injection electronic control unit (1747)
161 Ignition power module (1747)
162 Fuel injector (1st)
163 Fuel injector (2nd)
164 Fuel injector (3rd)
165 Fuel injector (4th)
166 Idle adjustment actuator (1747-1998)
167 Air flow meter (1747 - 1998 - 2387)
168 Timing sensor
237 FIAT CODE rear fuse
250 Fuel pump fuse (1370 - 1747 - 1998)
257 Fuel pump relay (1747)

N.D. Ultrasound-soldered joint taped in wiring loom

4F120N

55
1747

Front left/engine cables connection

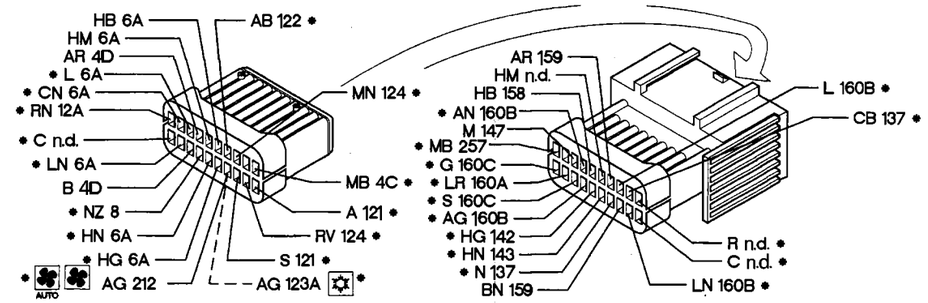

55A
1747

Front left/engine cables connection

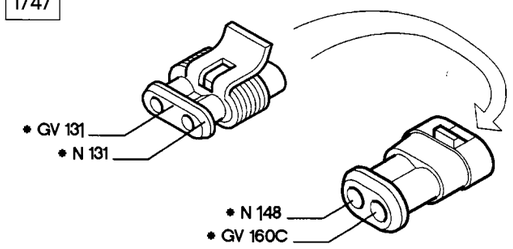

55B
1747

Front right/engine cables connection

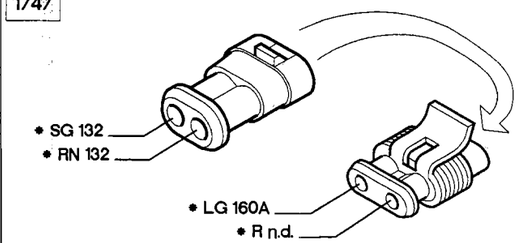

160
1747

Ignition/fuel injection electronic control unit (1747)

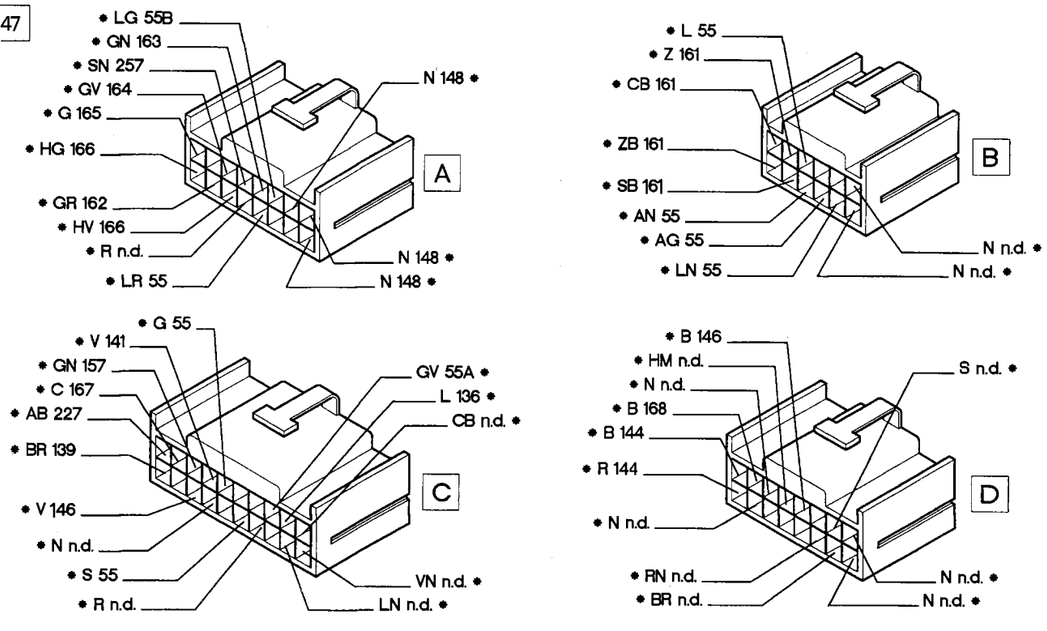

P4F144N01

* The cables involved in the wiring diagram are marked with an asterisk.

4F121N

Starting system - Electronic ignition and fuel injection - Recharging system and warning light - Low engine oil pressure warning light - Fuel injection fault warning light (1998 engine)

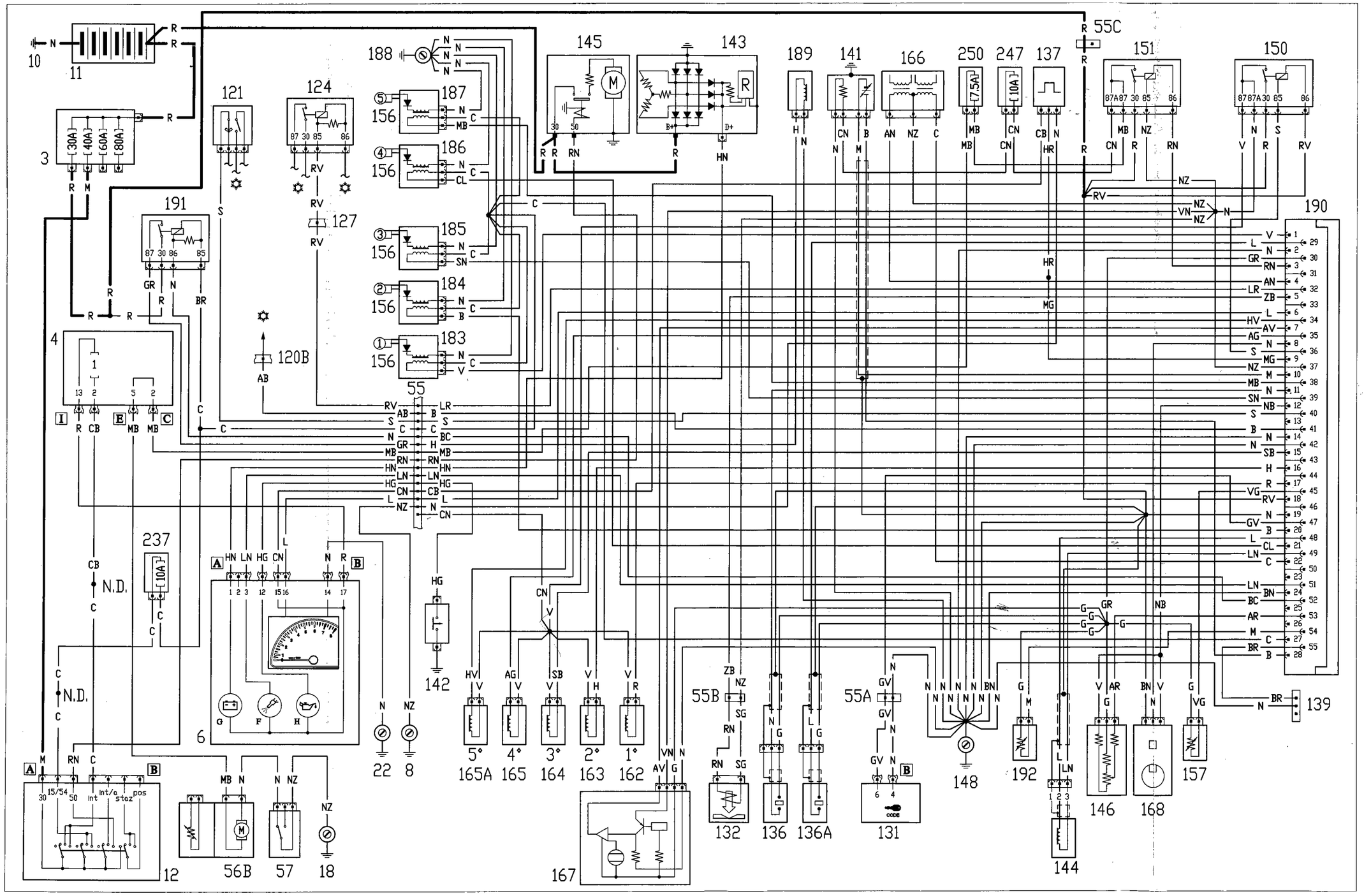

4F122N

55.

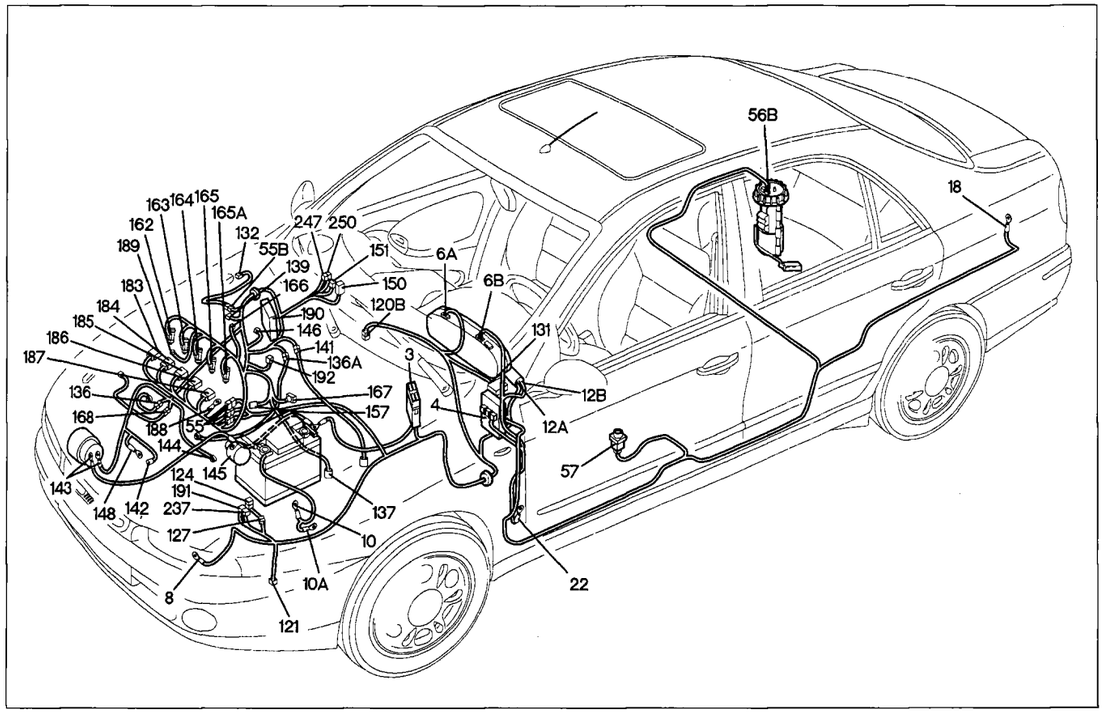

P4F147N01

Starter - Electronic ignition and fuel injection - Recharging system and warning light - Low engine oil pressure warning light - Fuel injection fault warning light (1998 engine)

Key to components

3 Power fuse box
4 Fuse and relay unit
6 Instrument panel
8 Front left earth
10 Battery earth on engine
10A Battery earth on body shell
91 Battery
12 Ignition switch
18 Rear left earth
55 Front left/engine cables connection
55A Front left/engine cables connection
55B Front right/engine cables connection
55C Front left/engine cables connection
56 Fuel gauge sender unit
57 Inertial switch
120 Air conditioner cables connection
121 Three-stage pressure switch
124 Air conditioner compressor relay
127 Front left cable/cable on relay bracket connection
131 Fiat CODE electronic control unit
132 Fuel vapour cut-off solenoid
136 Knock sensor
136A Knock sensor (1998)
137 Car speed sensor
139 Diagnostic socket for fuel injection
141 Heated Lambda probe
142 Low oil pressure warning light switch
143 Alternator
144 Rpm and TDC sensor
145 Starter motor
146 Potentiometer on throttle valve
148 Earth for electronic injection
150 Fuel injection relay (1370 - 1747 - 1998)
151 Lambda probe, fuel pump, fuel injectors relay (1370-1998)
157 Water temperature sensor for fuel injection
162 Fuel injector (1st)
163 Fuel injector (2nd)
164 Fuel injector (3rd)
165 Fuel injector (4th)
165A Fuel injector (5th)
166 Idle adjustment actuator (1747-1998)
167 Air flowmeter (1747-1998-2387)
168 Timing sensor
183 Ignition coil (1st) (1998)
184 Ignition coil (2nd) (1998)
185 Ignition coil (3rd) (1998)
186 Ignition coil (4th) (1998)
187 Ignition coil (5th) (1998)
188 Ignition coil earth (1998)
189 Timing variator (1998)
190 Ignition/fuel injection control unit (1998)
191 Timing variator relay (1998)
192 Air temperature sensor
237 Fiat CODE fuse
247 Lambda probe fuse (1370-1998)
250 Fuel pump fuse (1370 - 1747 - 1998)

N.D. Ultrasound-soldered joint taped in wiring loom

4F123N

55 — Front left/engine cables connection

1998

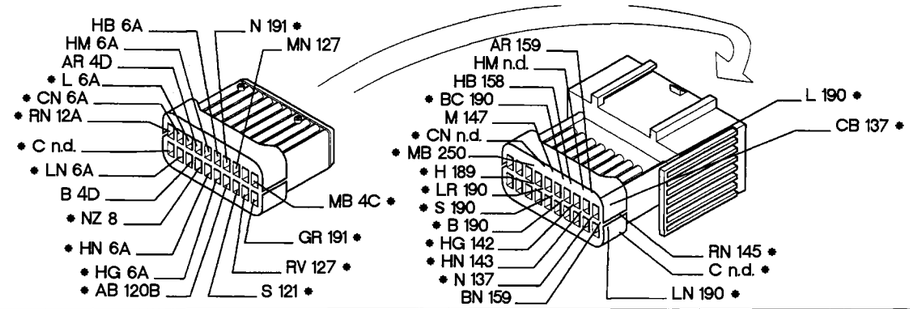

55A — Front left/engine cables connection

1998

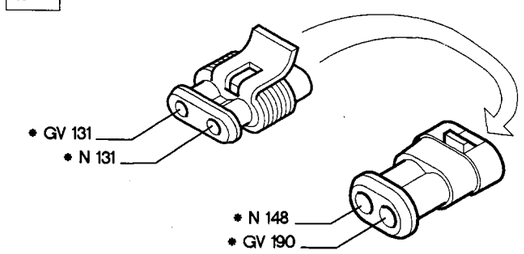

55B — Front right/engine cables connection

1998

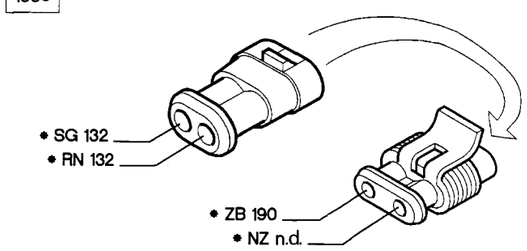

190 — Ignition/fuel injection electronic control unit (1998)

1998

1	• V 183	17	• R 162	37	• NZ n.d.
2	• N 148	18	• RV n.d.	38	• MB 187
3	• RN 151	19	• N n.d.	39	• SN 185
4	• AN 166	20	• B 184	40	• S 55
5	• ZB 55B	21	• CL 186	41	• B 55
6	• L 55	22	• C 166	42	• N 148
7	• AV 167	24	• BN 148	45	• G 157
8	• N 168	27	• C n.d.	47	• GV 55A
9	• MG n.d.	28	• B 141	48	• L 144
10	• M 141	29	• L 136A	49	• LN 144
11	• N 136	30	• GR n.d.	51	• LN 55
12	• NB n.d.	32	• LR 55	52	• BC 55
14	• N 148	34	• HV 165A	53	• AR 146
15	• SB 164	35	• AG 165	54	• M 192
16	• H 163	36	• S 150	55	• BR 139

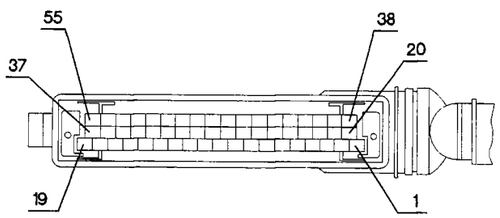

P4F148N01

* The cables involved in the wiring diagram are marked with an asterisk.

4F124N

Automatic transmission - Fault warning light

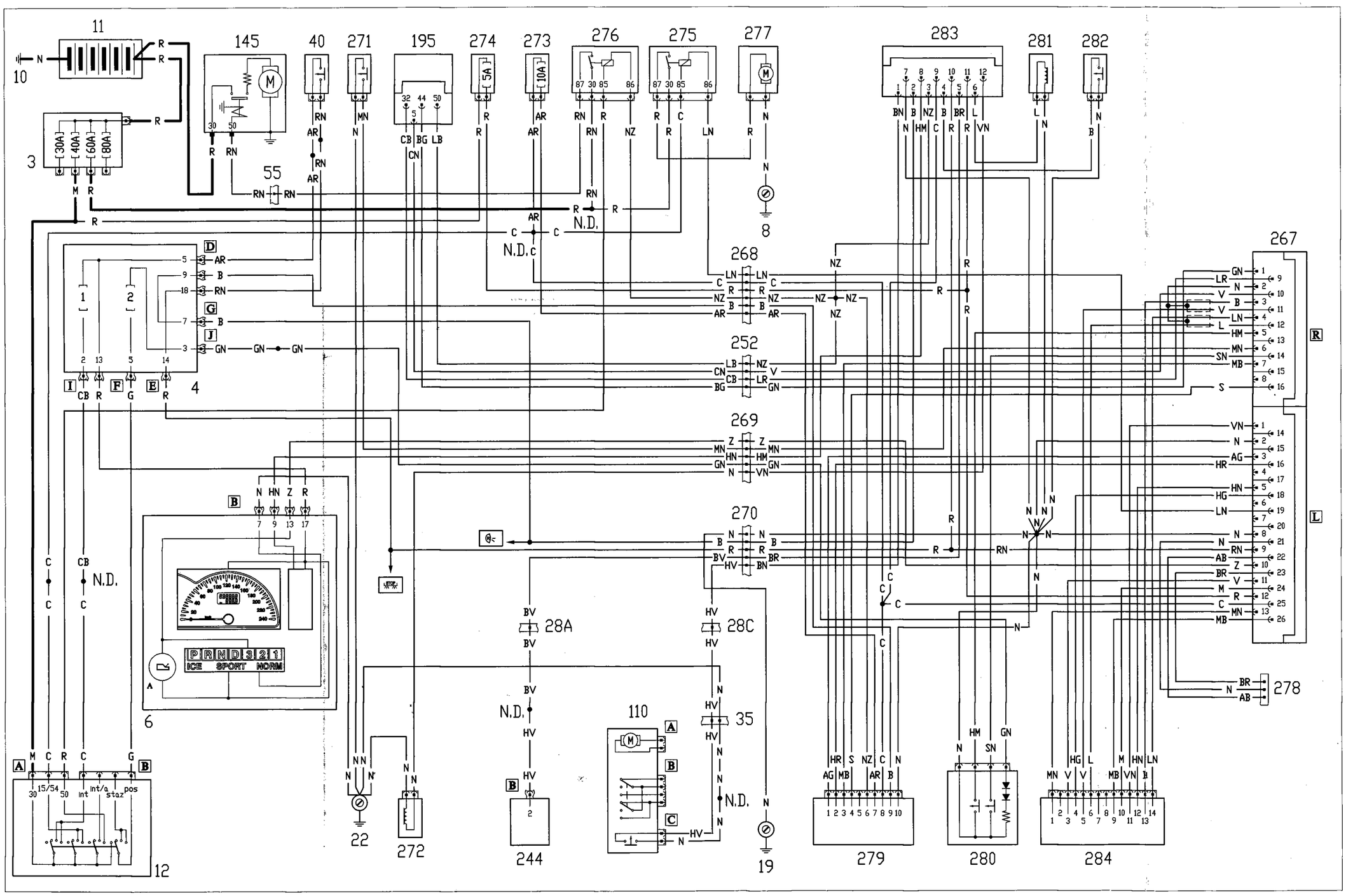

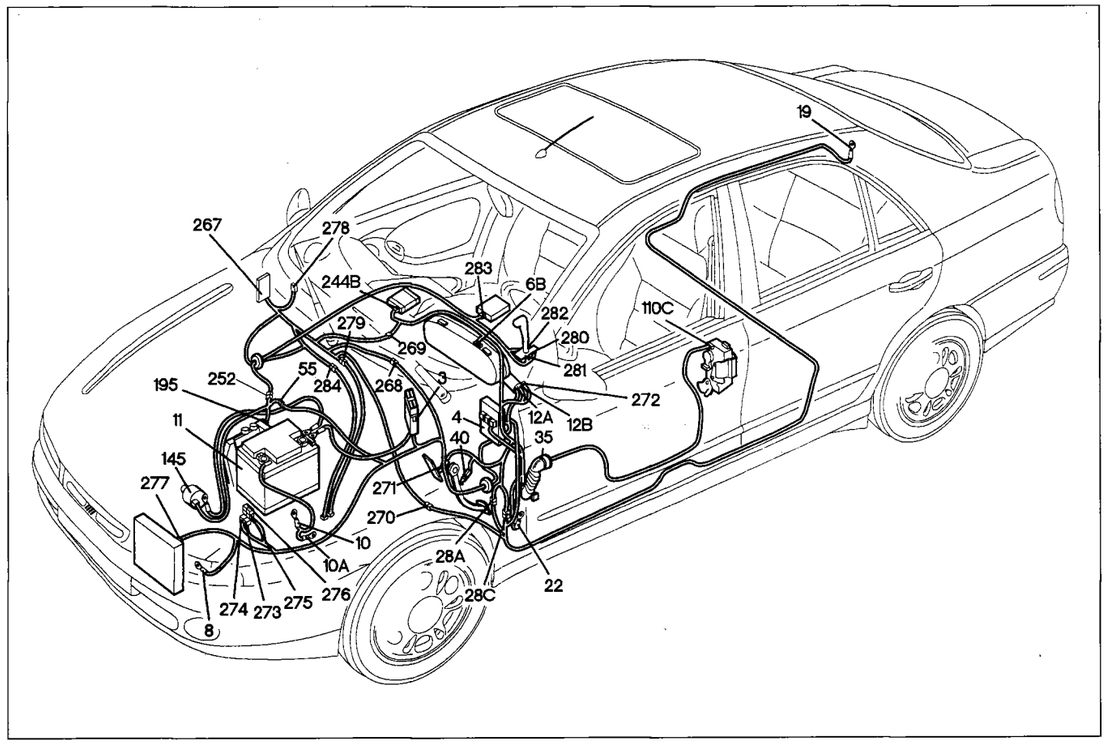

P4F151N01

Automatic transmission - Fault warning light

Key to components

3 Power fuse box
4 Fuse and relay unit
6 Instrument panel
8 Front left earth
10 Battery earth on engine
10A Battery earth on body shell
11 Battery
12 Ignition switch
19 Rear right earth
22 Left dashboard earth
28 Dashboard/rear cables connection
35 Dashboard/front left door cables connection
40 Stop lights switch
55 Front left/engine cables connection
110 Front left door lock
145 Starter motor
195 Ignition/fuel injection electronic control unit (1581)
244 Integrated services electronic control unit
252 Auto transmission/engine cables connection
267 Auto transmission control unit
268 Auto transmission/front cables connection
269 Auto transmission/dashboard cables connection
270 Auto transmission/rear cables connection
271 Kick-down switch
272 Ignition switch solenoid
273 Auto transmission fuse
274 Auto transmission fuse
275 Auto transmission oil radiator fan relay
276 Starter enablement relay
277 Auto transmission oil radiator fan
278 Atuo transmission diagnostic socket
279 Auto transmission gear selector
280 ICE/SPORT selector for automatic transmission
281 Shift Lock solenoid
282 Additional PARK switch for automatic transmission
283 Safety control unit for automatic transmission
284 Automatic transmission connection on gearbox

N.D. Ultrasound-soldered joint taped in wiring loom

4F126N

267L Auto transmission control unit

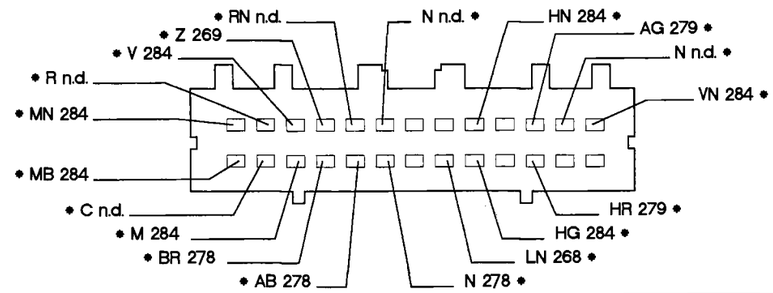

267R Auto transmission control unit

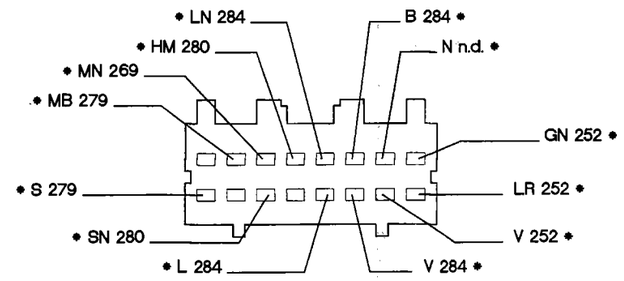

252 Auto transmission/engine cables connection

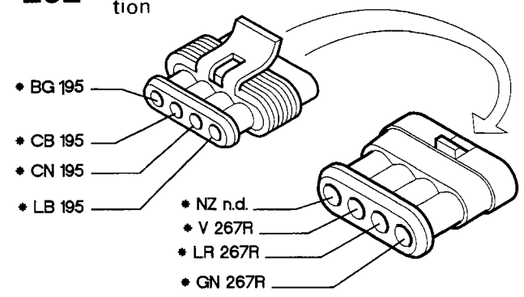

268 Auto transmission/front cables connection

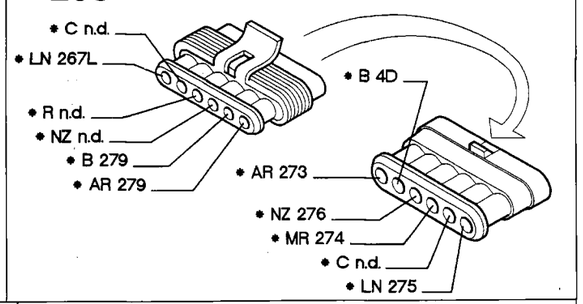

269 Auto transmission/dashboard cables connection

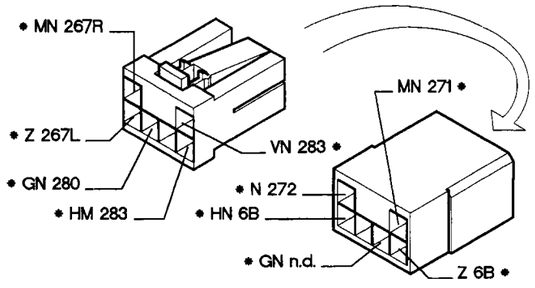

270 Auto transmission/rear cables connection

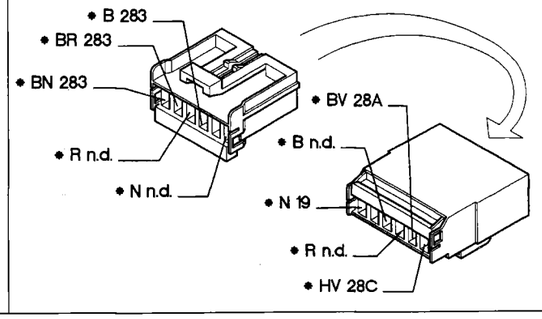

P4F152N01

* The cables involved in the wiring diagram are marked with an asterisk.

4F127N

Diagnostic sockets connections

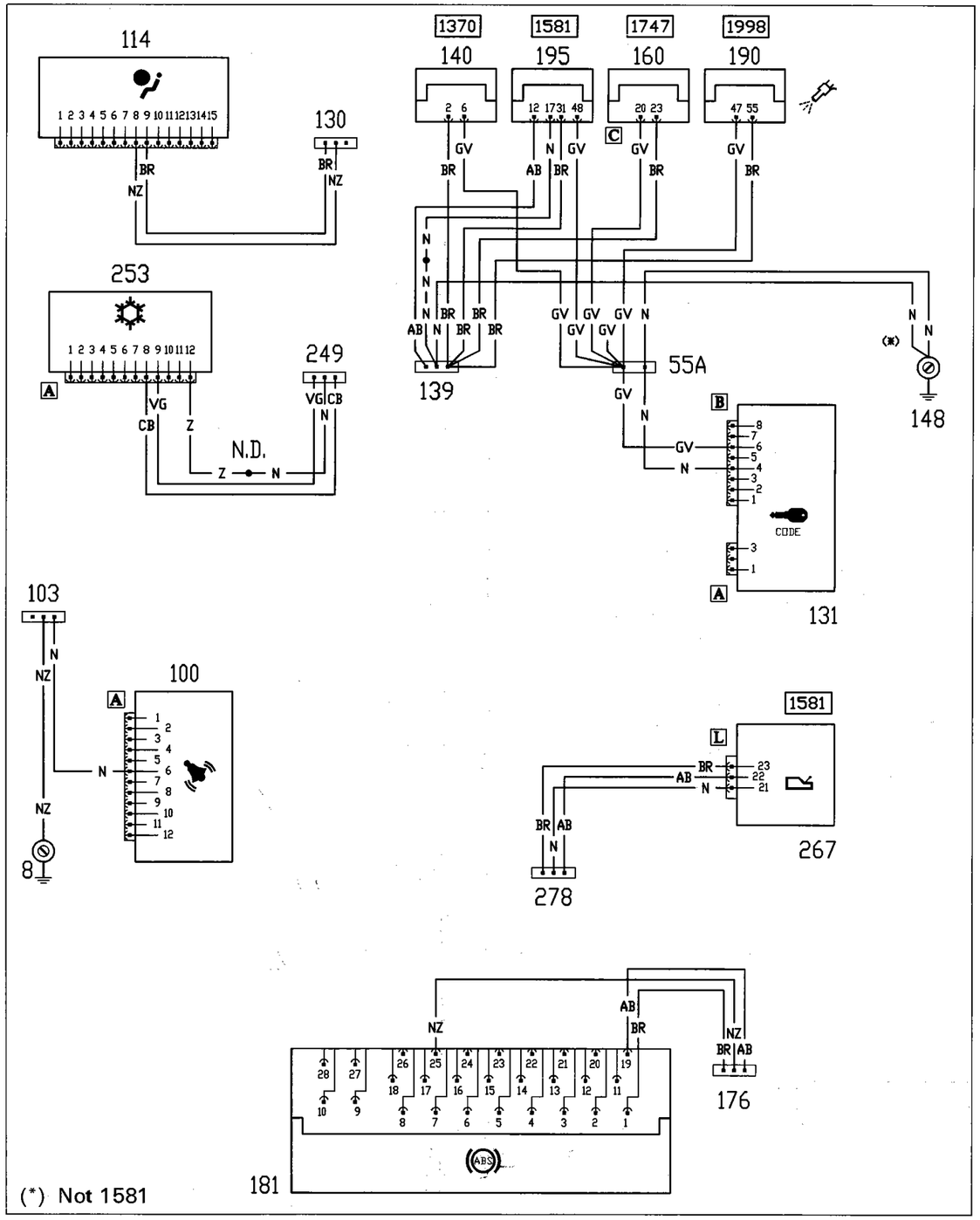

P4F153N01

4F128N

Location of components

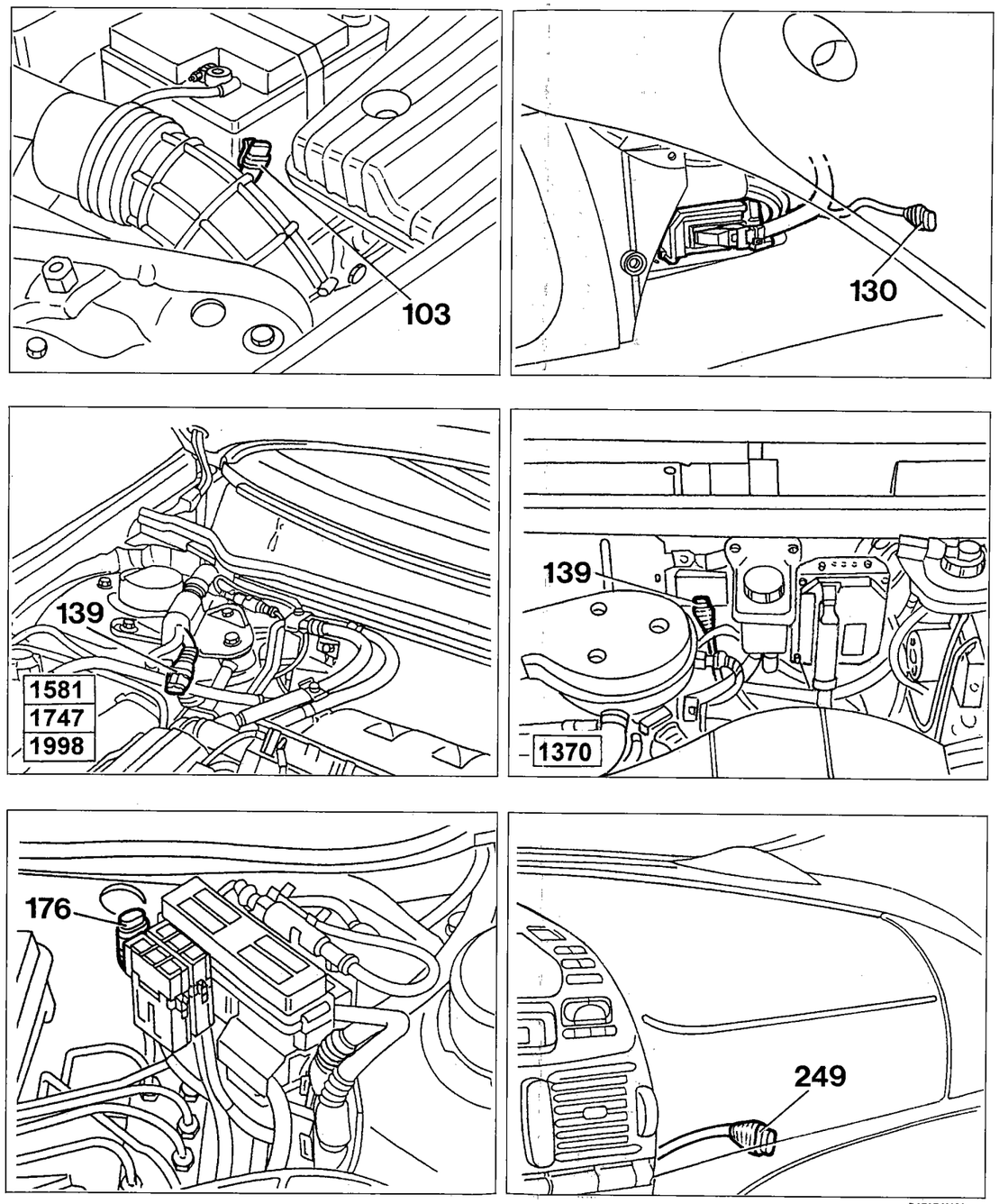

P4F154N01

4F129N

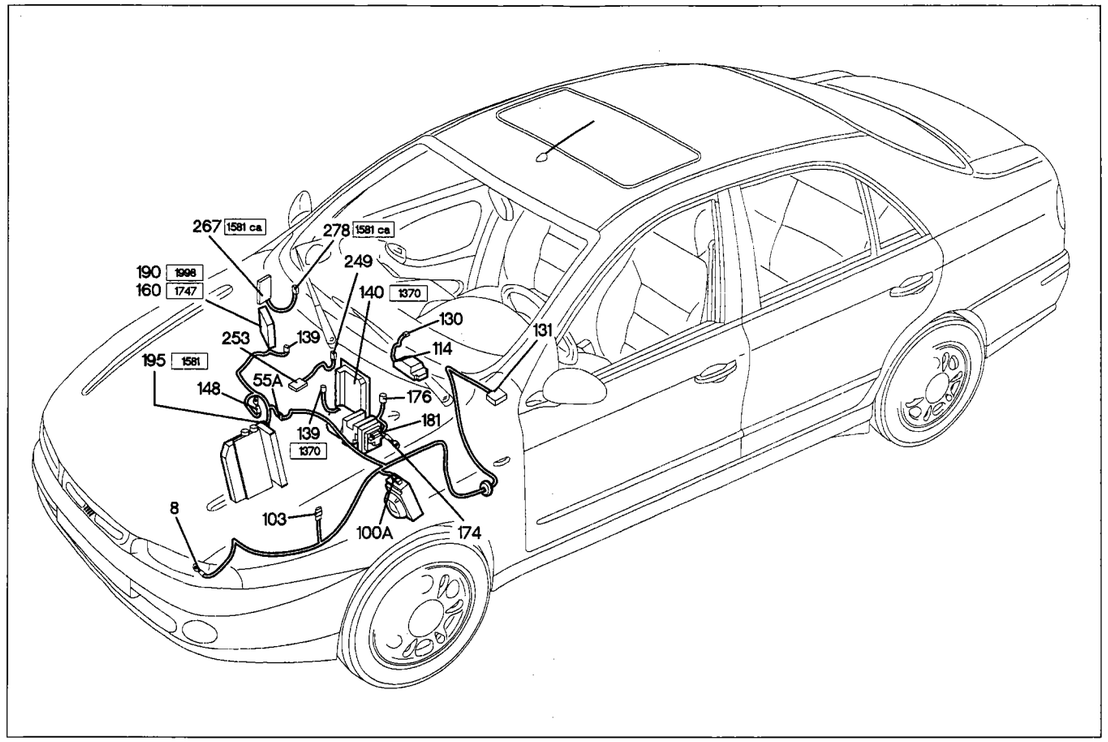

P4F155N01

Diagnostic sockets connections

Key to components

8 Front left earth
55A Engine left/front cables connection
100 Alarm system electronic control unit
103 Diagnostic socket for alarm
114 Air Bag electronic control unit
130 Diagnostic socket for Air Bag
131 Fiat CODE electronic control unit
139 Diagnostic socket for fuel injection
140 Fuel injection/ignition control unit (1370)
148 Earth for electronic injection
160 Ignition/fuel injection electronic control unit (1747)
174 Power earth for anti-lock braking system (A.B.S.)
176 Diagnostic socket for anti-lock braking system (A.B.S.)
181 Electrohydraulic regulation unit for anti-lock braking system (A.B.S)
190 Ignition/fuel injection electronic control unit (1998)
195 Ignition/fuel injection electronic control unit (1581)
249 Diagnostic socket for climate control system
253 Control unit for climate control system
267 Auto transmission control unit
278 Diagnostic socket for automatic transmission

N.D. Ultrasound-soldered joint taped in wiring loom

4F130N

102 Diagnostic socket for alarm

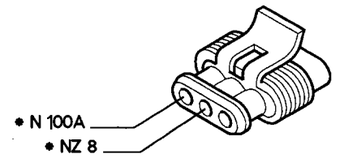

130 Diagnostic socket for Air Bag

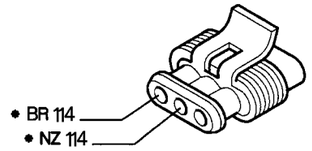

139 Diagnostic socket for fuel injection

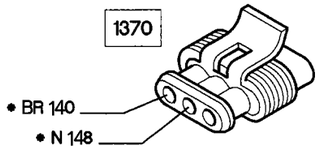

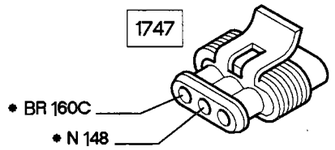

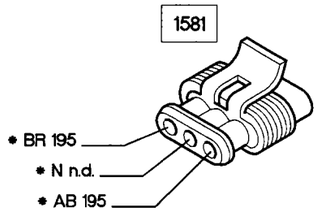

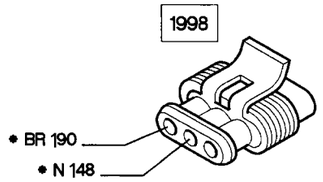

249 Diagnostic socket for climate control sys.

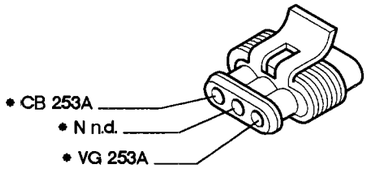

278 Auto transmission diagnostic socket

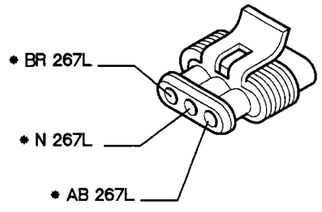

P4F156N01

* The cables involved in the wiring diagram are marked with an asterisk.

4F131N

Fiat-CODE system and warning light (TD engine)

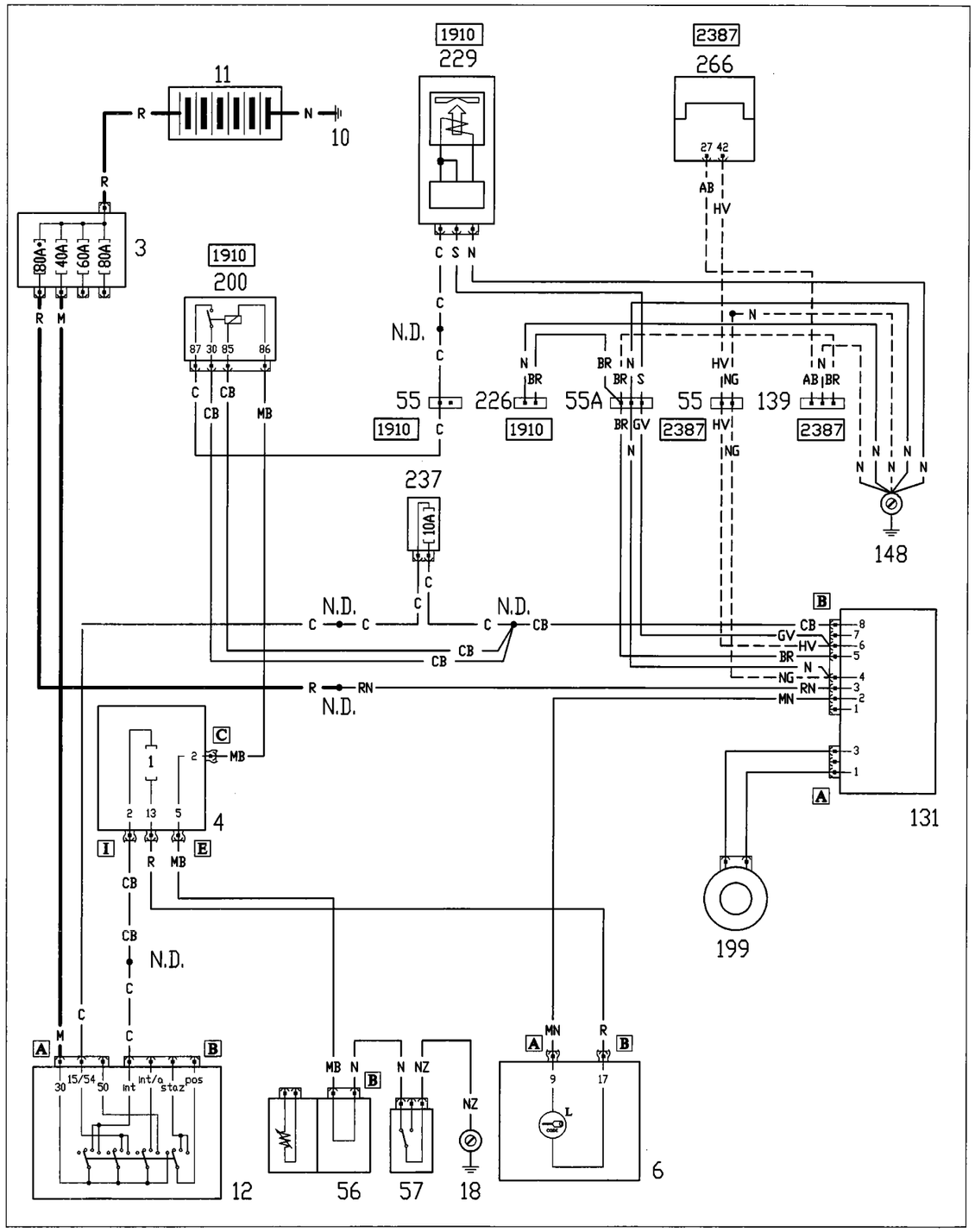

Location of components

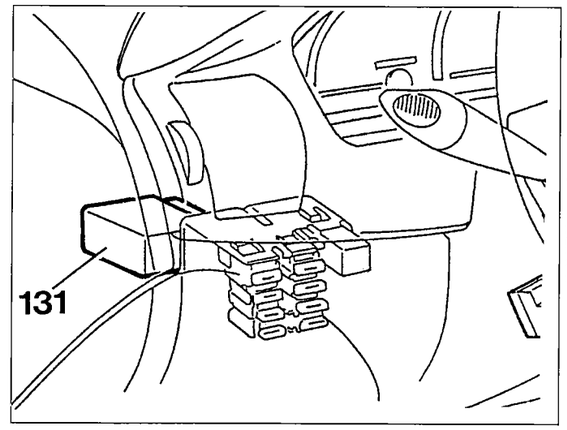

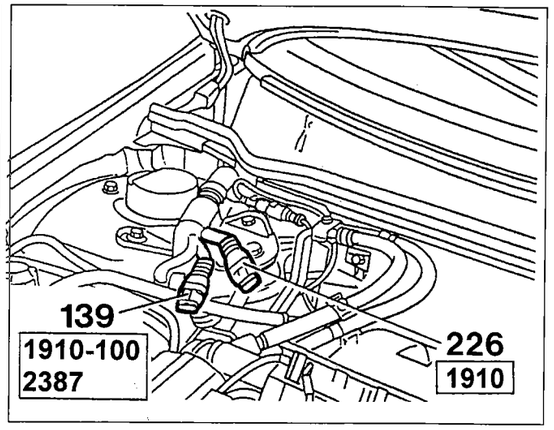

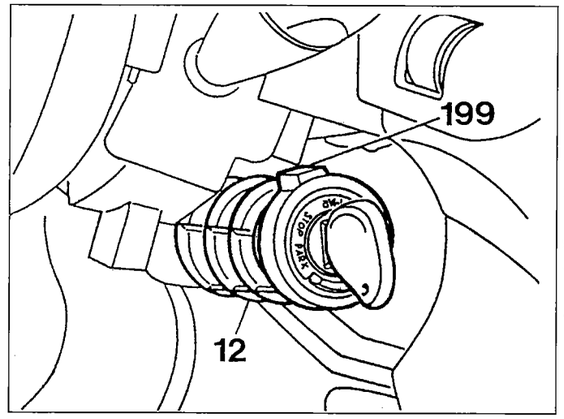

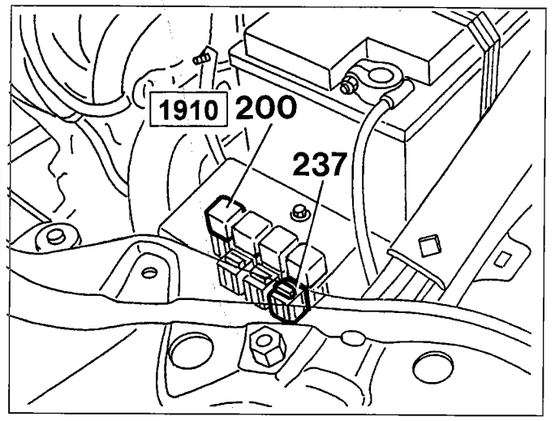

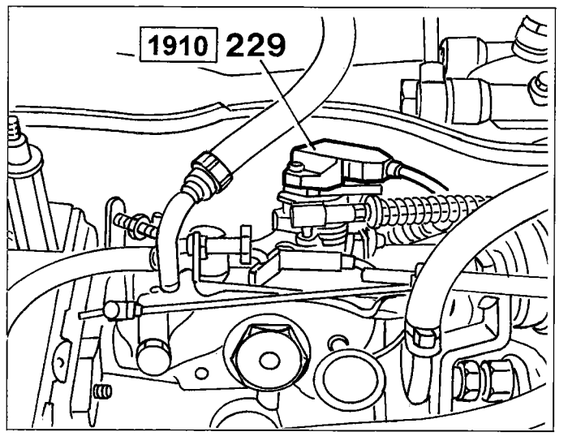

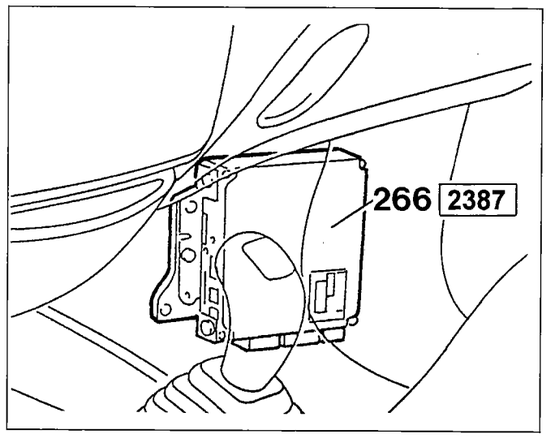

P4F158N01

4F213N

4F214N

55.

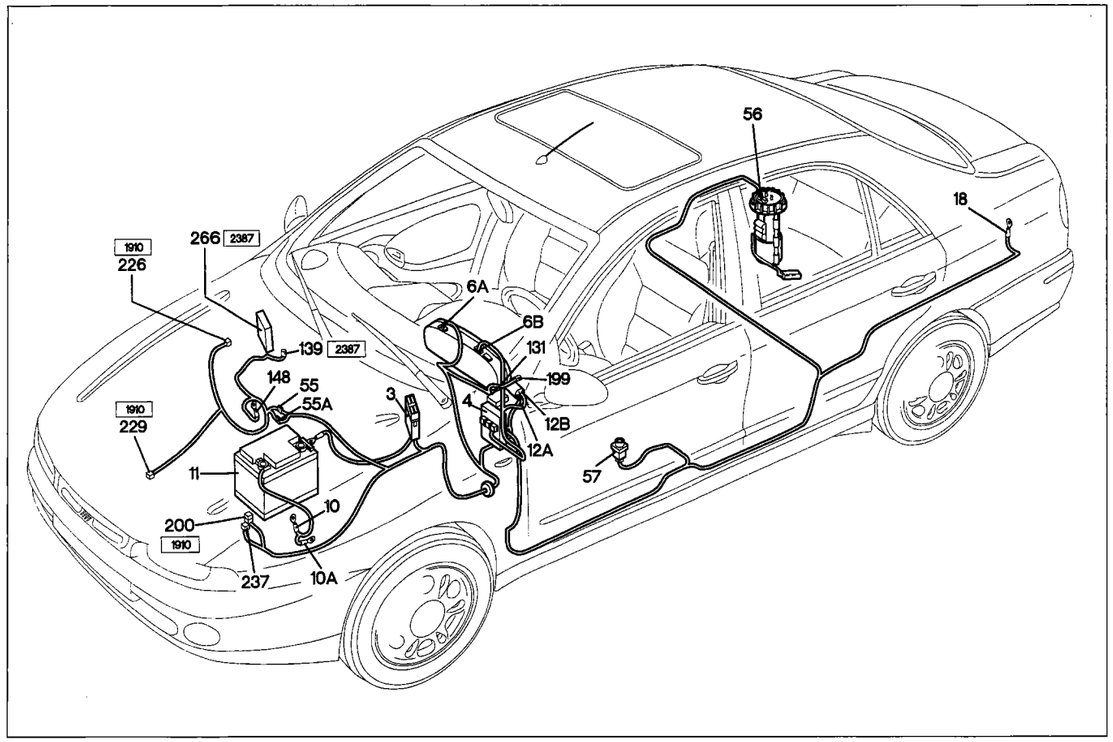

P4F159N01

Fiat-CODE system and warning light (TD engine)

Key to components

3 Power fuse box
4 Fuse and relay unit
6 Instrument panel
10 Battery earth on engine
10A Battery earth on body shell
11 Battery
12 Ignition switch
18 Rear left earth
55 Front left/engine cables connection
55A Front left/engine cables connection
56 Fuel gauge sender unit
57 Inertial switch
131 Fiat CODE electronic control unit
139 Diagnostic socket for fuel injection
140 Fuel injection/ignition control unit (1370)

148 Earth for electronic fuel injection
160 Electronic ignition/fuel injection control unit (1747)
190 Electronic ignition/fuel injection control unit (1998)
195 Electronic ignition/fuel injection control unit (1581)
199 Aerial for Fiat CODE system
200 Electrostop relay (TD)
226 Diagnostic socket for Fiat CODE system (1910TD)
229 Engine cut-out electrostop (TD)

237 Fiat CODE fuse
266 Electronic fuel injection control unit (2387)

N.D. Ultrasound-soldered joint taped in wiring loom

4F215N

55A Front left/engine cables connection

1910

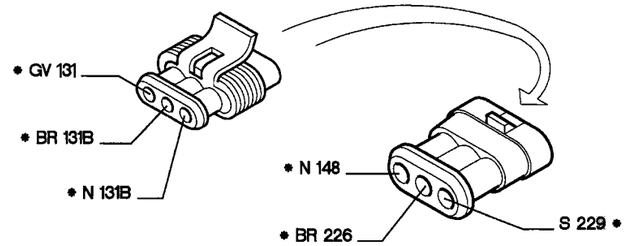

2387

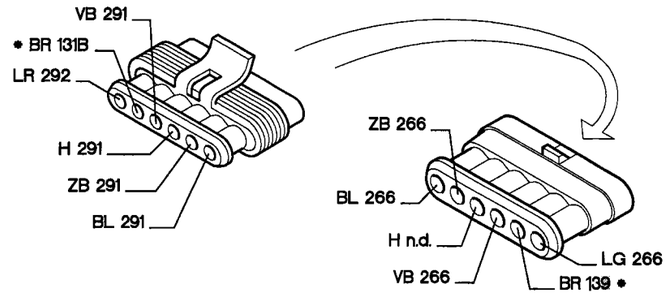

131 Fiat CODE electronic control unit

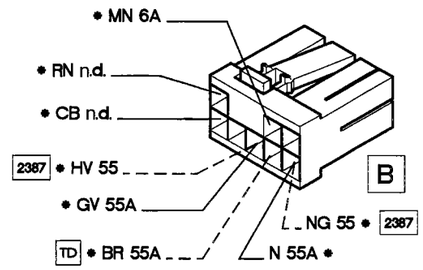

139 Diagnostic socket for fuel injection

2387

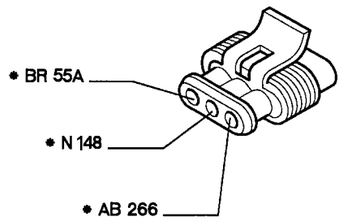

P4F160N01

* The cables involved in the wiring diagram are marked with an asterisk.

4F216N

Instrument panel connections (TD engine)

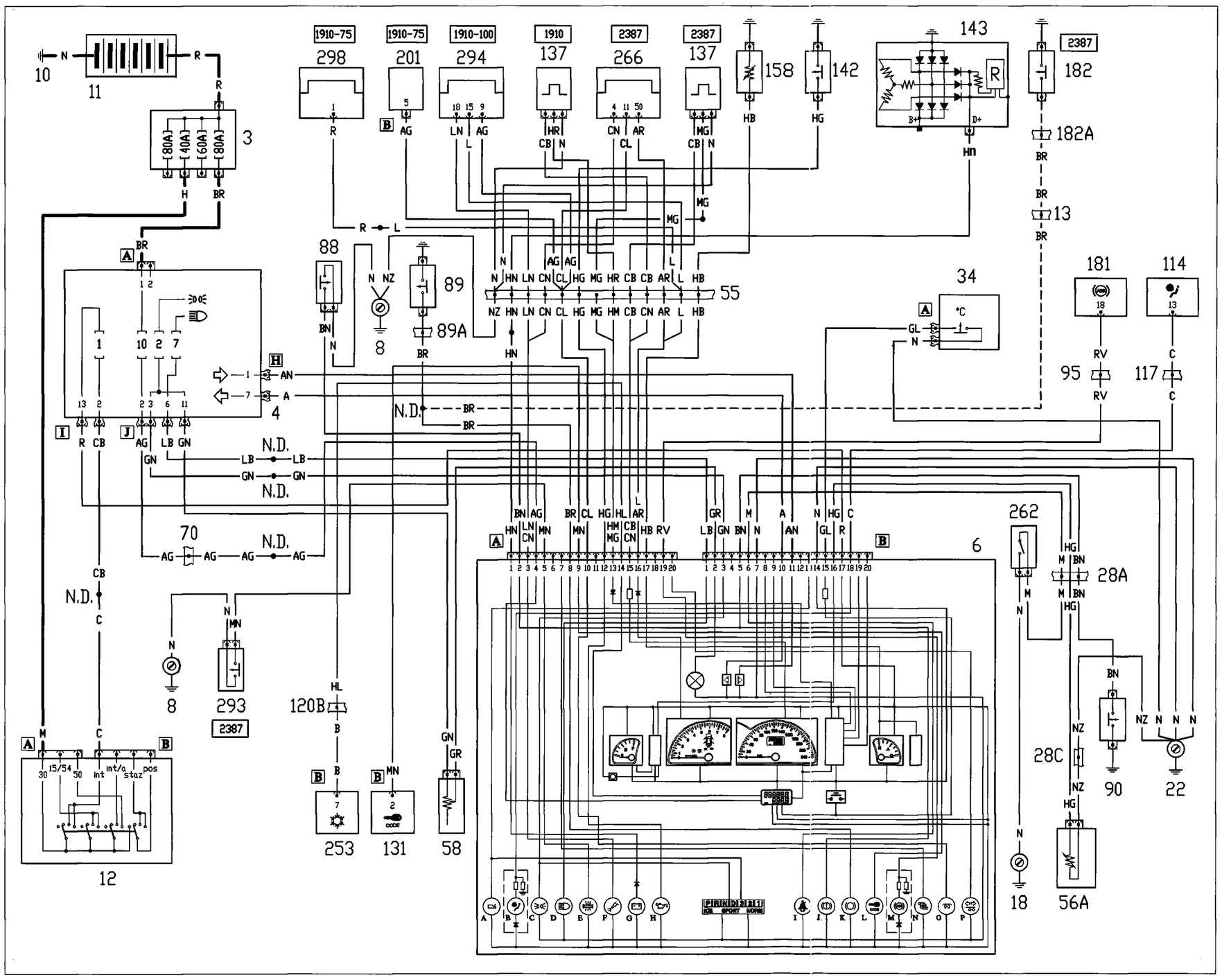

P4F161N01

4F217N

55.

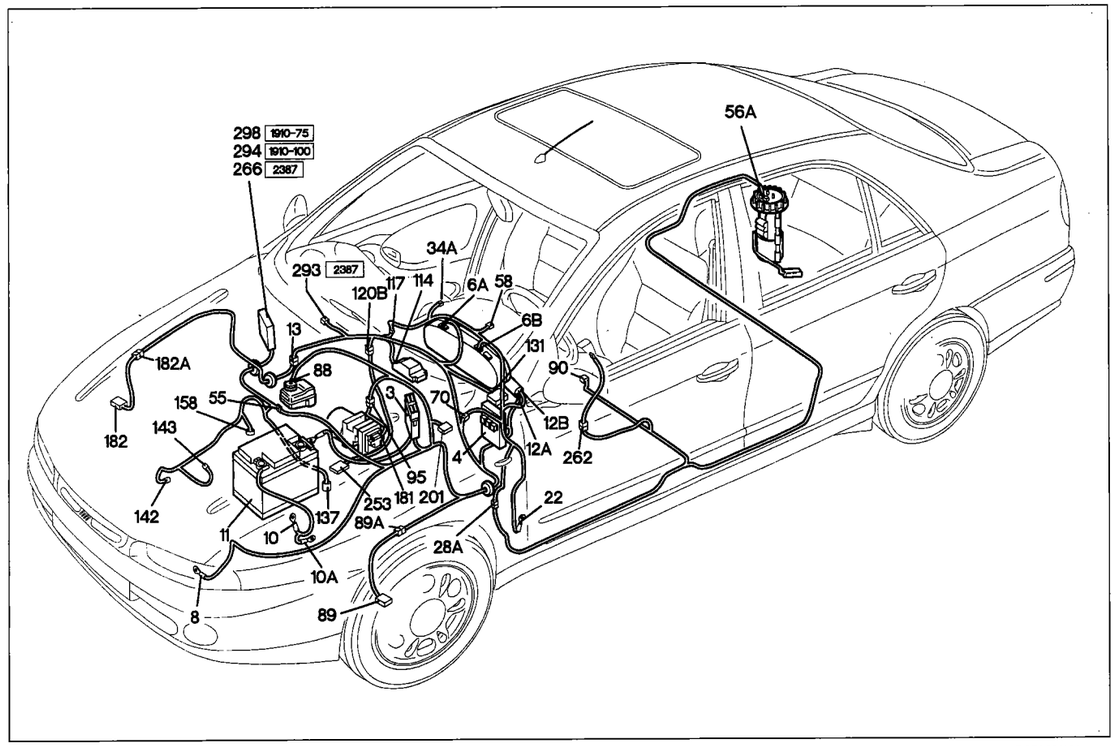

P4F163N01

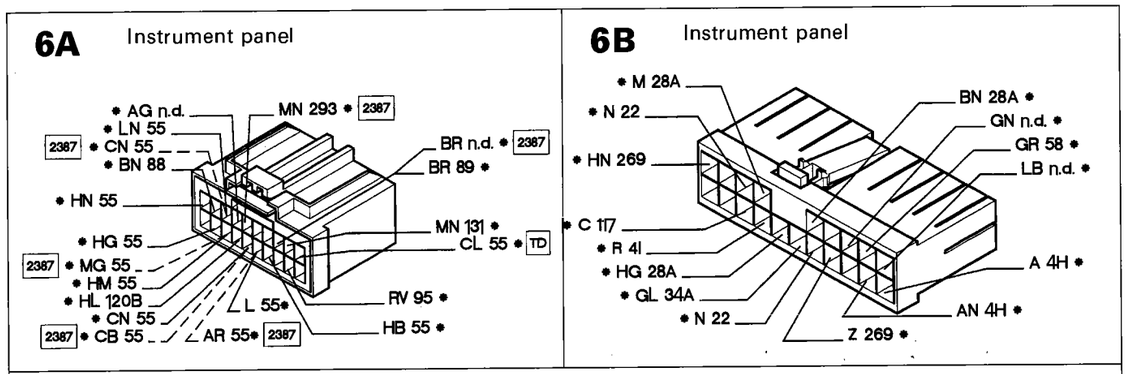

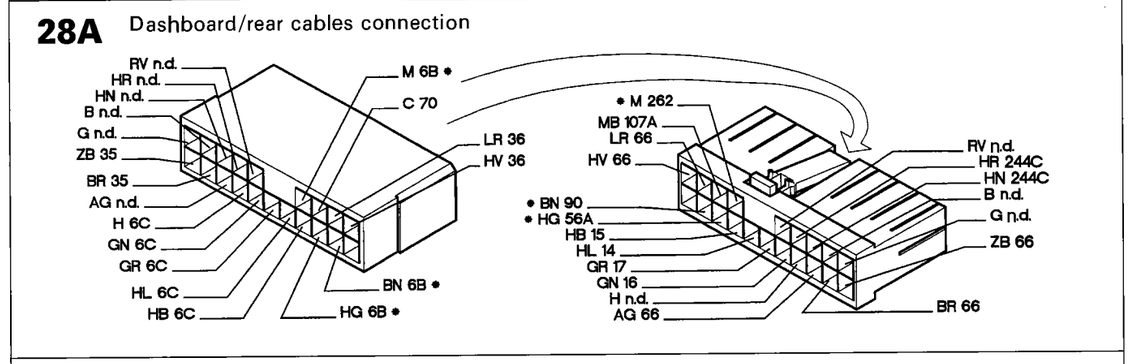

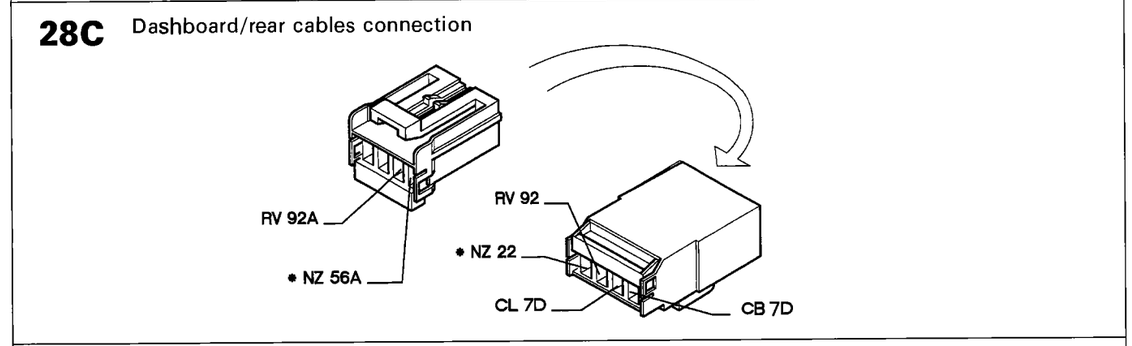

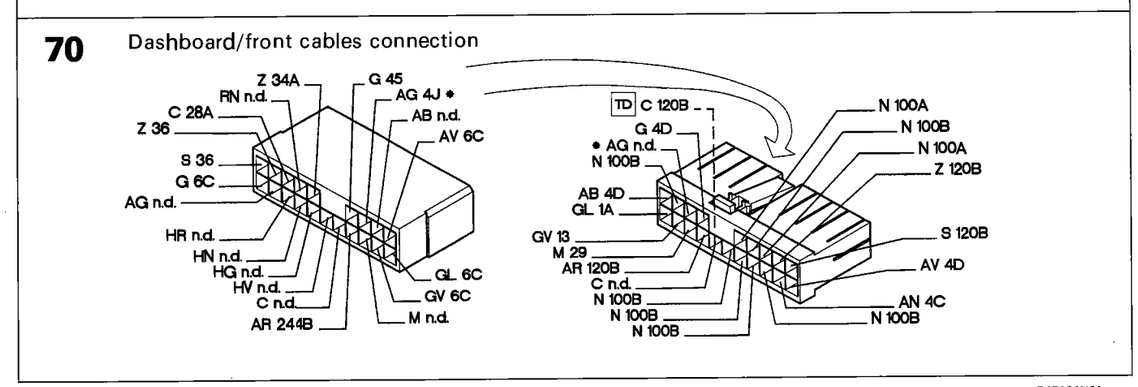

P4F164N01

* The cables involved in the wiring diagram are marked with an asterisk.

Instrument panel connections (TC engine)

Key to components

3 Power fuse box
4 Fuse and relay unit
6 Instrument panel
8 Front left earth
10 Battery earth on engine
10A Battery earth on body shell
11 Battery
12 Ignition switch
13 Front right/left cables connection
22 Left dashboard earth
28 Dashboard/rear cables connection
34 Switch unit
55 Front left/engine cables connection
56 Fuel gauge sender unit
58 Instrument panel illumination brightness adjustment rheostat
70 Dashboard/front cables connection
88 Low brake fluid level sensor
89 Left brake pad wear sensor
89A Left brake pad wear sensor cables connection

90 Handbrake on warning light switch
95 Front cables/anti-lock braking system A.B.S. connection
114 Air Bag electronic control unit
117 Air Bag/dashboard cables connection
120 Air conditioner cables connection
131 Fiat CODE electronic control unit

137 Vehicle speed sensor
142 Low oil pressure warning light switch

143 Alternator
158 Instrument water temperature sensor
181 Electrohydraulic control unit for anti-lock braking system (A.B.S.)
182 Right brake pad wear sensor
182A Right brake pad wear sensor cables connection
201 Heater plug control unit (TD)
253 Climate control system control unit
262 Seat belt warning light switch
266 Electronic fuel injection control unit (2387)

293 Air cleaner clogged indicator sensor (2387TD)

294 Electronic fuel injection control unit (1910T-D-100)
298 E.G.R. electronic control unit (1910TD-75)

N.D. Ultrasound-soldered joint taped in wiring loom

4F218N

4F219N

Thermostatically-controlled heater / air conditioner (1910-75 engine)

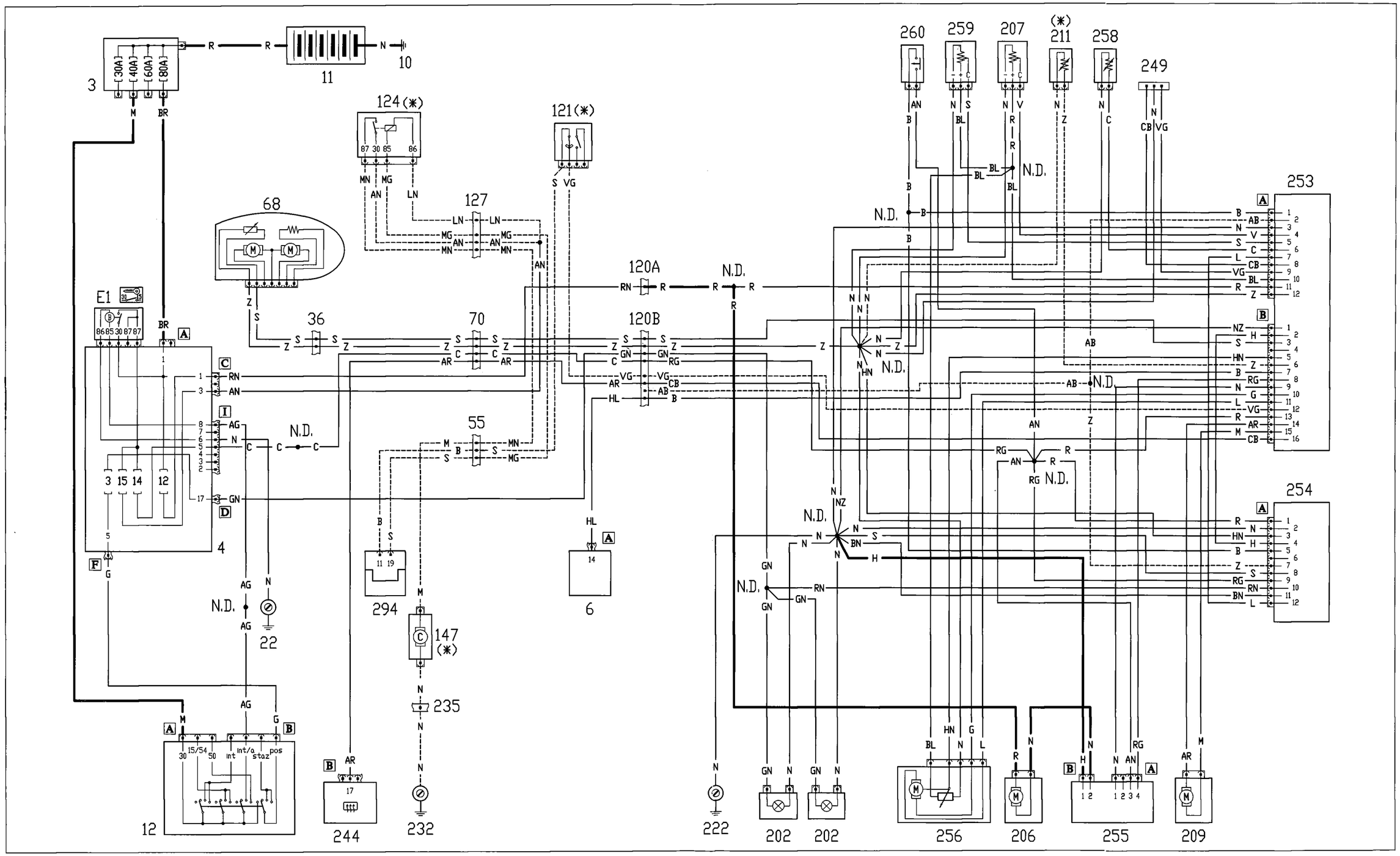

(*) Connections and components NOT present on the HEATER version

4F220N

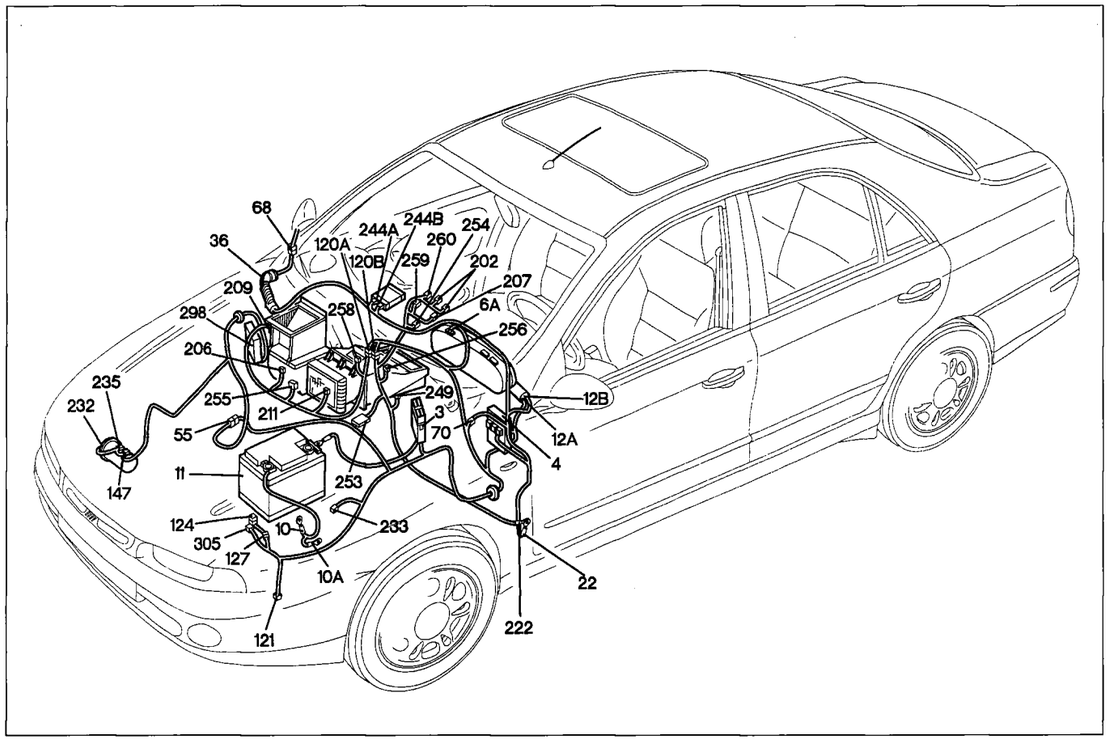

P4F167N01

Thermostatically-controlled heater/air conditioner (1910-75 engine)

Key to components

3 Power fuse box
4 Fuse and relay unit
6 Instrument panel
10 Battery earth on engine
10A Battery earth on body shell
11 Battery
12 Ignition switch
22 Left dashboard earth
36 Dashboard/front right door cables connection
55 Front left/engine cables connection
68 Right door mirror
70 Dashboard/front cables connection
120 Air conditioner cables connection
121 Three-stage pressure switch
124 Air conditioner compressor relay

127 Front left cable/relay mounting bracket cable connection
147 Compressor for air conditioner
202 Bulbs for heater/air conditioner controls symbol illumination
206 Car interior climate control fan

207 Fan speed adjustment switch

209 Air intake flap actuator
211 Anti-frost sensor
222 Earth for climate control system
232 Earth for compressor

233 Thermostat on coolant pump (1910TD-75)

235 Air conditioner compressor cables connection
244 Integrated services electronic control unit
249 Diagnostic socket for climate control system
253 Climate control system control unit
254 Climate controls with car interior temperature sensor
255 Electronic speed variator for climate control fan

256 Air mixing actuator
258 Treated air temperature sensor
259 Desired temperature adjustment switch
260 "MAX-DEF" microswitch
298 E.G.R. electronic control unit (1910TD-75)
305 Compressor disconnection relay (1910TD-75)

N.D. Ultrasound-soldered joint taped in wiring loom

4F221N

55 Front left/engine cables connection

1910-75

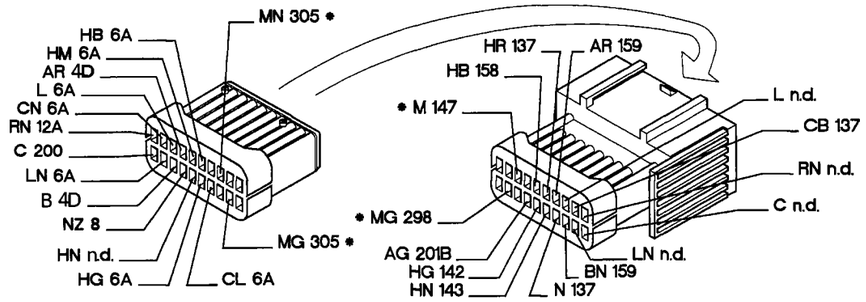

70 Dashboard/front cables connection

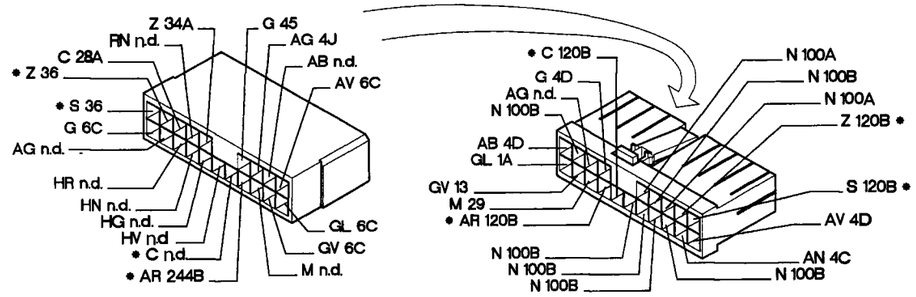

120B Air conditioner cables connection

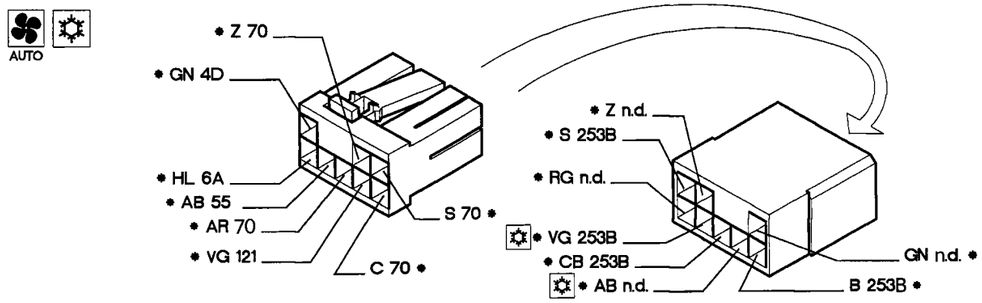

127 Front left cable/relay mounting bracket cable connection

1910-75

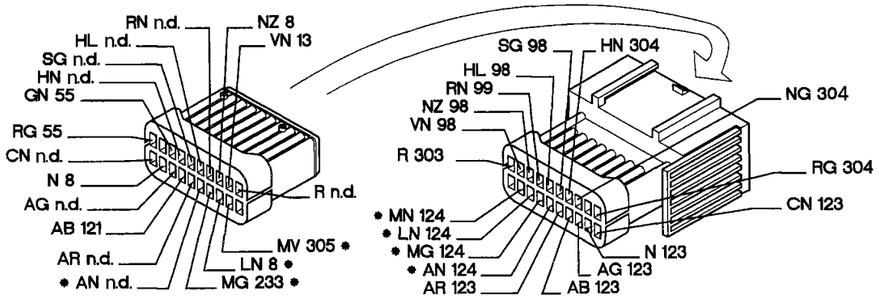

P4F168N01

* The cables involved in the wiring diagram are marked with an asterisk.

4F222N

Thermostatically-controlled heater/air conditioner (1910-100 engine)

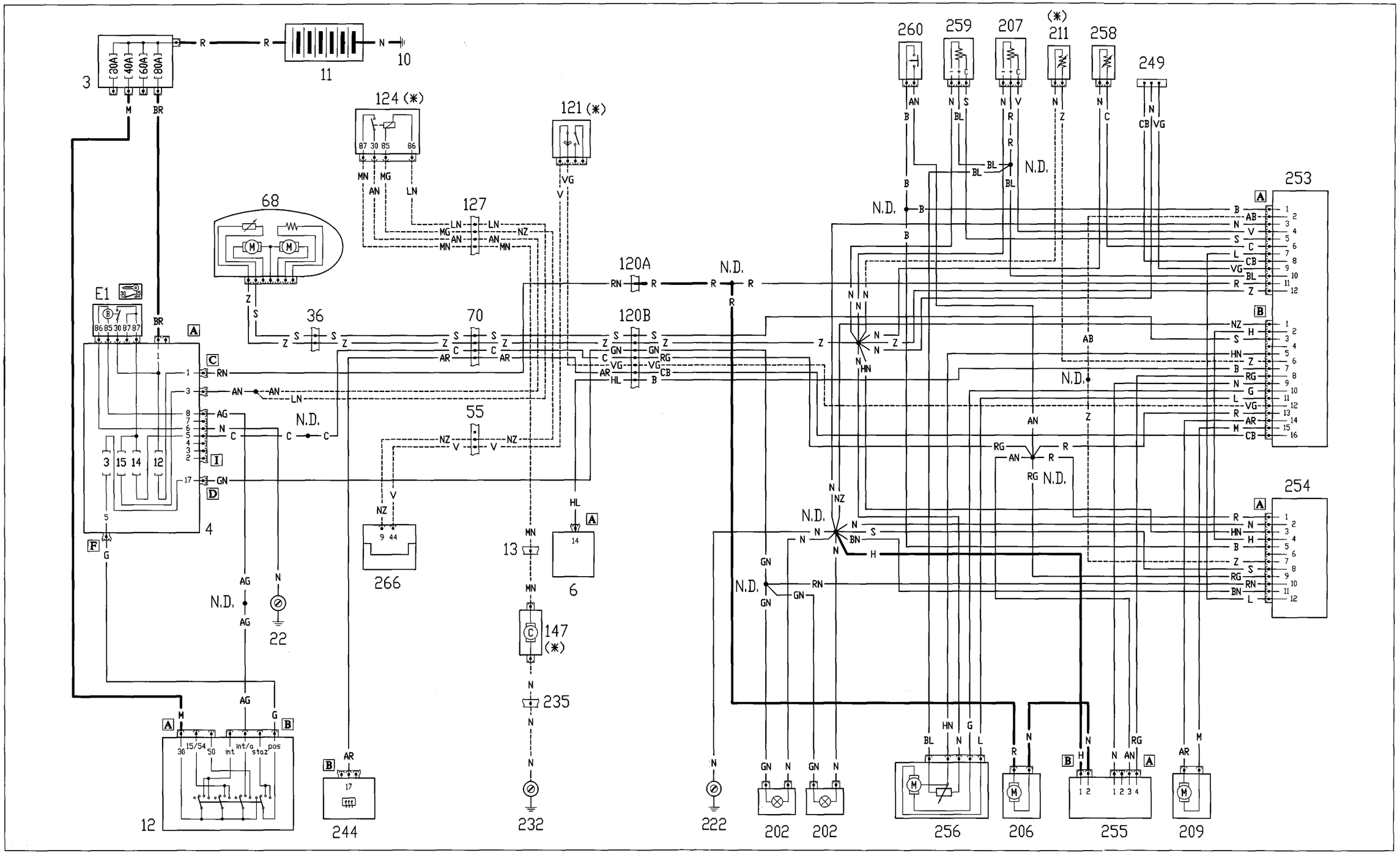

(*) Connections and components NOT present on the HEATER version

4F223N

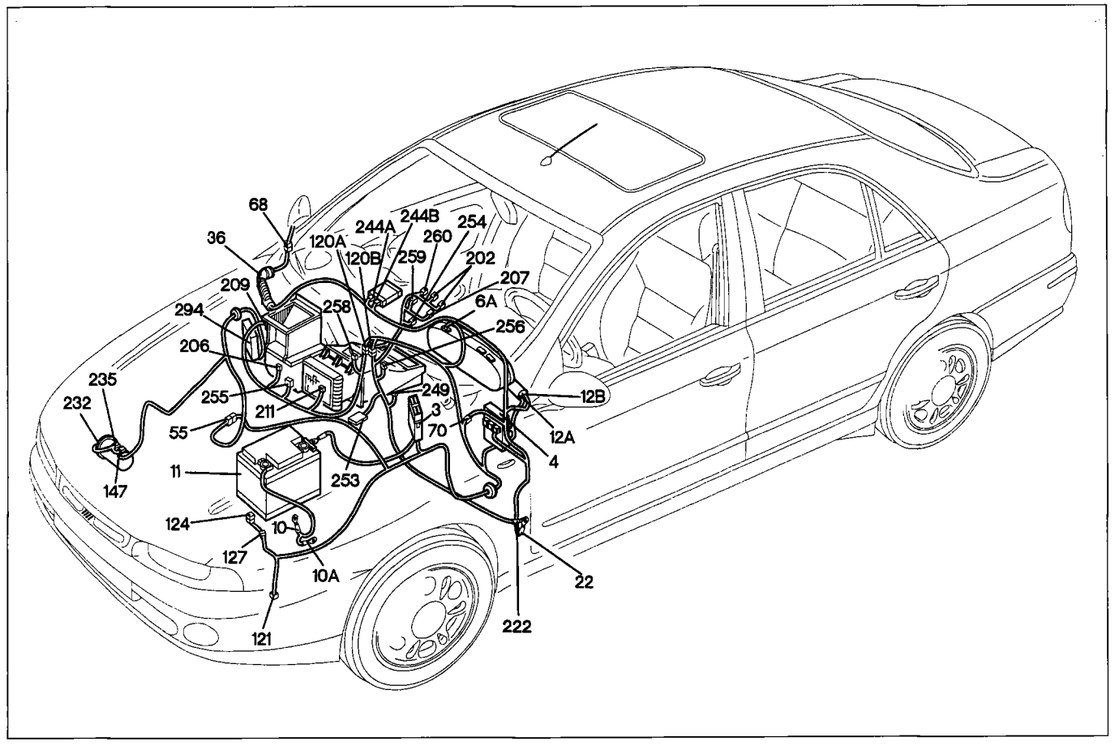

P4F171N01

Thermostatically-controlled heater/air conditioner (1910-100 engine)

Key to components

3 Power fuse box
4 Fuse and relay unit
6 Instrument panel
10 Battery earth on engine
10A Battery earth on body shell
11 Battery
12 Ignition switch
22 Left dashboard earth
36 Dashboard/front right door cables connection
55 Front left/engine cables connection
68 Right door mirror
70 Dashboard/front cables connection
120 Air conditioner cables connection
121 Three-stage pressure switch
124 Air conditioner compressor relay

127 Front left cable/relay mounting bracket cable connection
147 Compressor for air conditioner
202 Bulbs for heater/air conditioner controls symbol illumination
206 Car interior climate control fan

207 Electric fan speed adjustment switch

209 Air intake flap actuator
211 Anti-frost sensor
222 Earth for climate control system
232 Earth for compressor

235 Air conditioner compressor cables connection
244 Integrated services electronic control unit
249 Diagnostic socket for climate control system
253 Climate control system control unit
254 Climate controls with car interior temperature sensor
255 Electronic speed variator for climate control fan

256 Air mixing flap
258 Treated air temperature sensor
259 Desired temperature adjustment switch
260 "MAX-DEF" microswitch
294 Electronic fuel injection control unit (1910T-D-100)

N.D. Ultrasound-soldered joint taped in wiring loom

4F224N

55 Front left/engine cables connection

1910-100

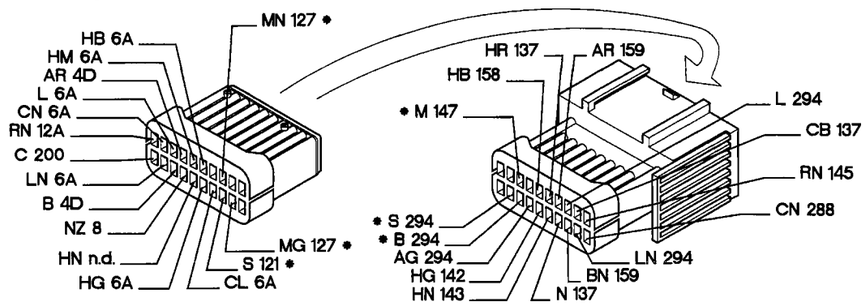

70 Dashboard/front cables connection

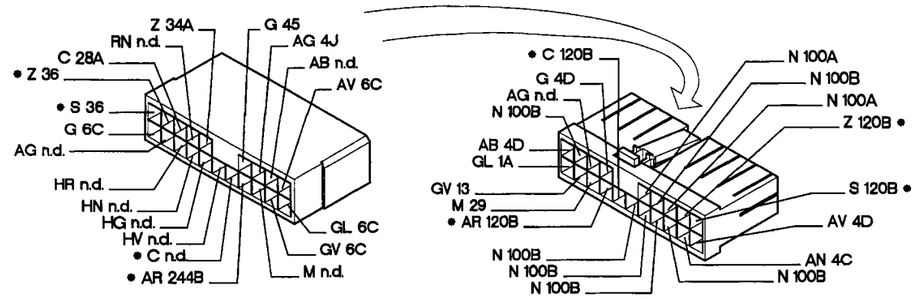

120B Air conditioner cables connection

AUTO

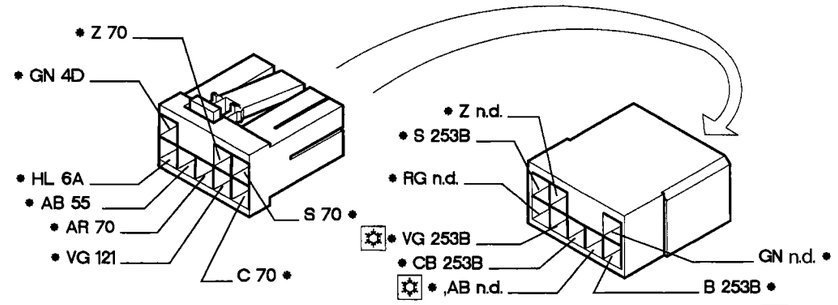

127 Front left cable/relay mounting bracket cable connection

1910-100

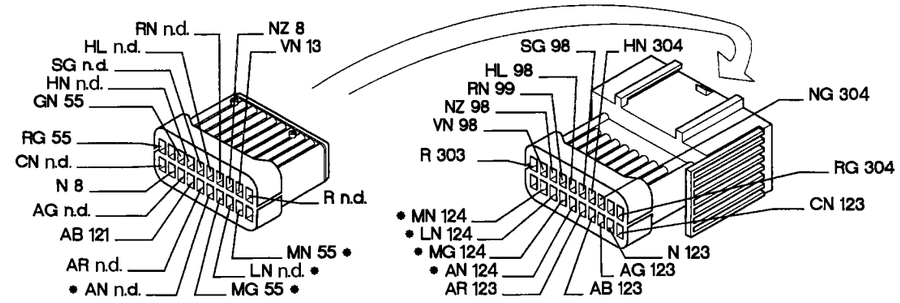

P4F172N01

* The cables involved in the wiring diagram are marked with an asterisk.

4F225N

Thermostatically-controlled heater/air conditioner (2387 engine)

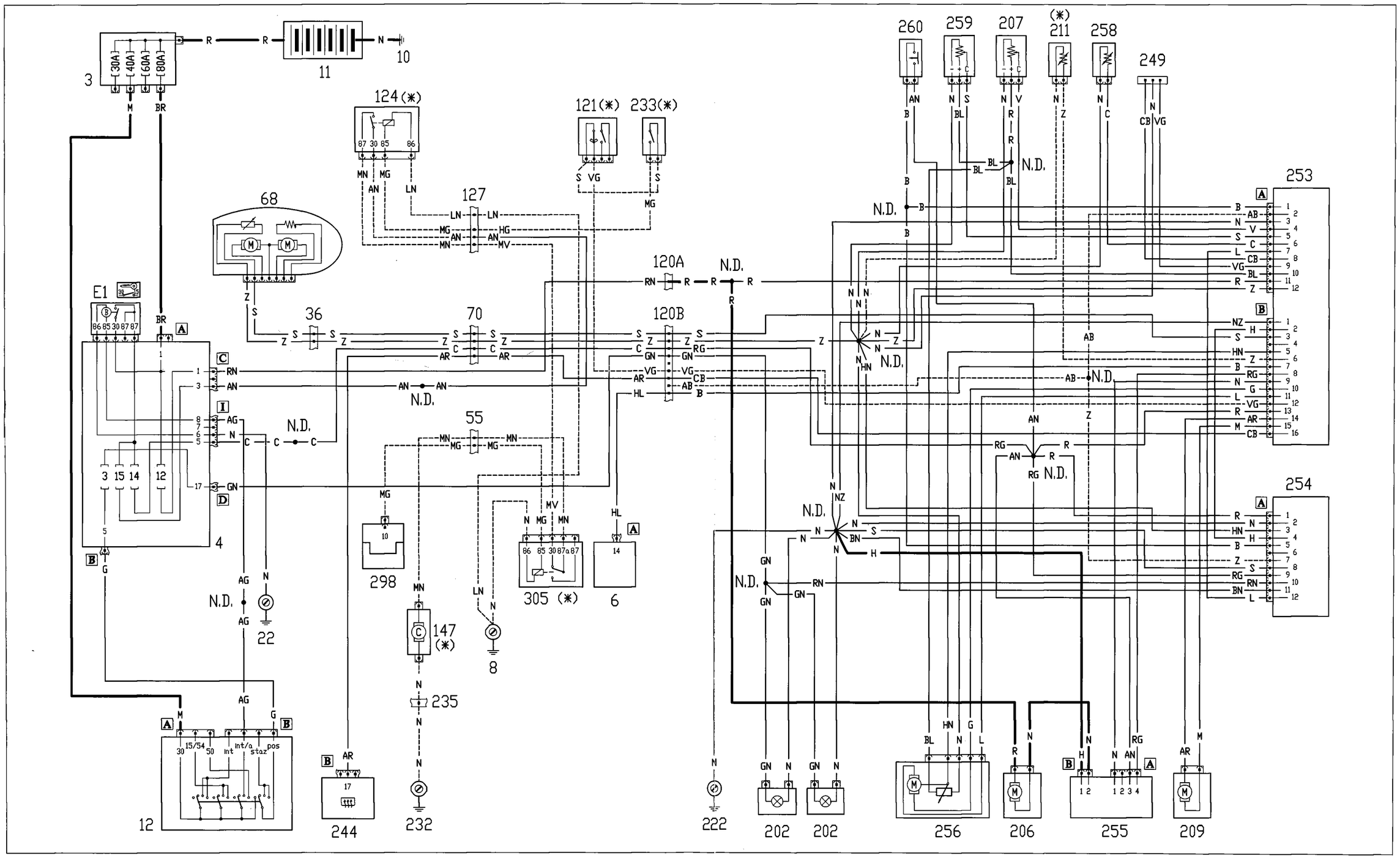

(*) Connections and components NOT present in the HEATER version

4F226N

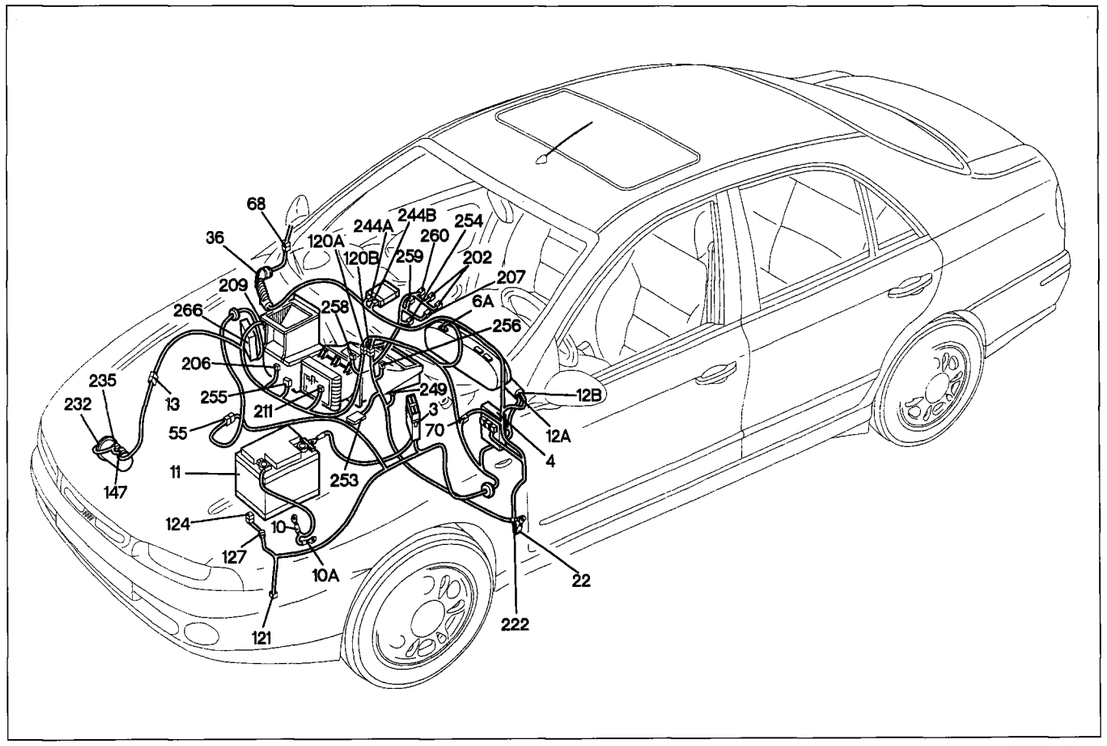

P4F175N01

Thermostatically-controlled heater/air conditioner (2387 engine)

Key to components

3 Power fuse box
4 Fuse and relay unit
6 Instrument panel
10 Battery earth on engine
10A Battery earth on body shell
11 Battery
12 Ignition switch
13 Front right/left cables connection
22 Left dashboard earth
36 Dashboard/front right door cables connection
55 Front left/engine cables connection
68 Right door mirror
70 Dashboard/front cables connection
120 Air conditioner cables connection
121 Three-stage pressure switch
124 Air conditioner compressor relay

127 Front left cable/relay mounting bracket cable connection
147 Compressor for air conditioner
202 Bulbs for heater/air conditioner controls symbol illumination
206 Car interior climate control fan

207 Electric fan speed adjustment switch

209 Air intake flap actuator
211 Anti-frost sensor
222 Earth for climate control system

232 Earth for compressor
235 Air conditioner compressor cables connection
244 Integrated services electronic control unit
249 Diagnostic socket for climate control system
253 Climate control system control unit
254 Climate controls with car interior temperature sensor
255 Electronic speed variator for climate control fan

256 Air mixing actuator
258 Treated air temperature sensor
259 Desired temperature adjustment switch
260 "MAX-DEF" microswitch
266 Electronic fuel injection control unit (2387)

N.D. Ultrasound-soldered joint taped in wiring loom

4F227N

55 Front left/engine cables connection

2387

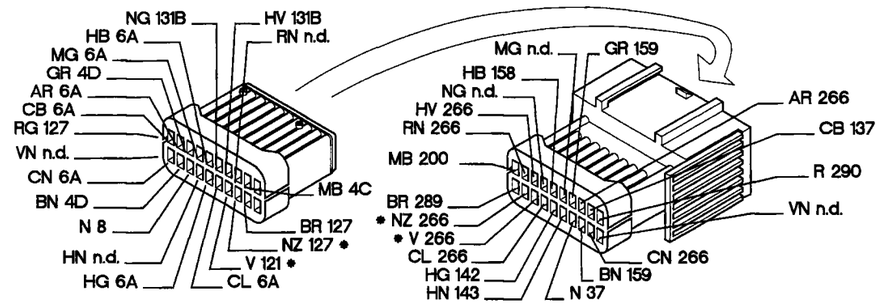

70 Dashboard/front cables connection

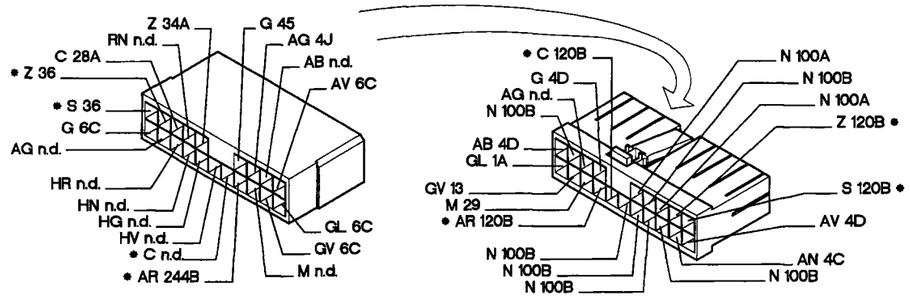

120B Air conditioner cables connection

AUTO

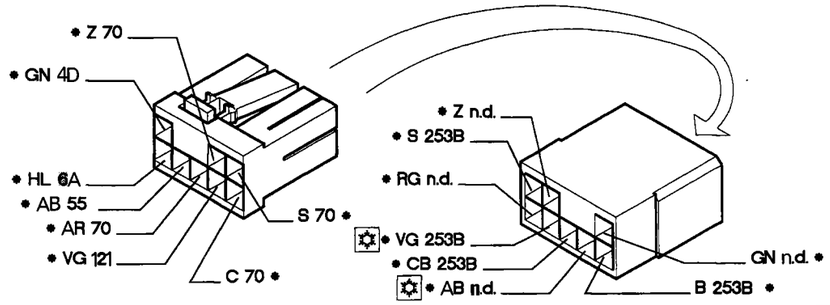

127 Front left cable/relay mounting bracket cable connection

2387

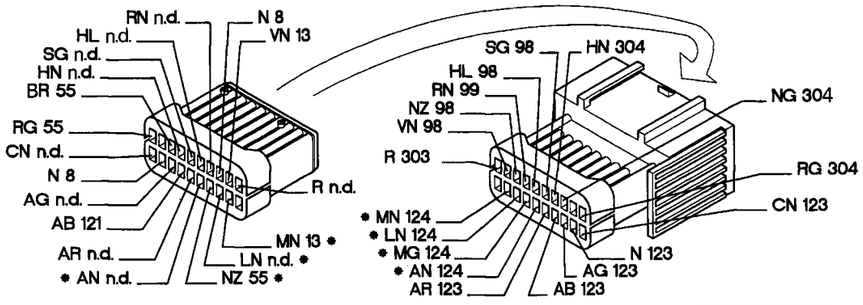

P4F176N01

* The cables involved in the wiring diagram are marked with an asterisk.

4F228N

Versions with air conditioner
Engine cooling system - Engine coolant temperature gauge (1910 engine)

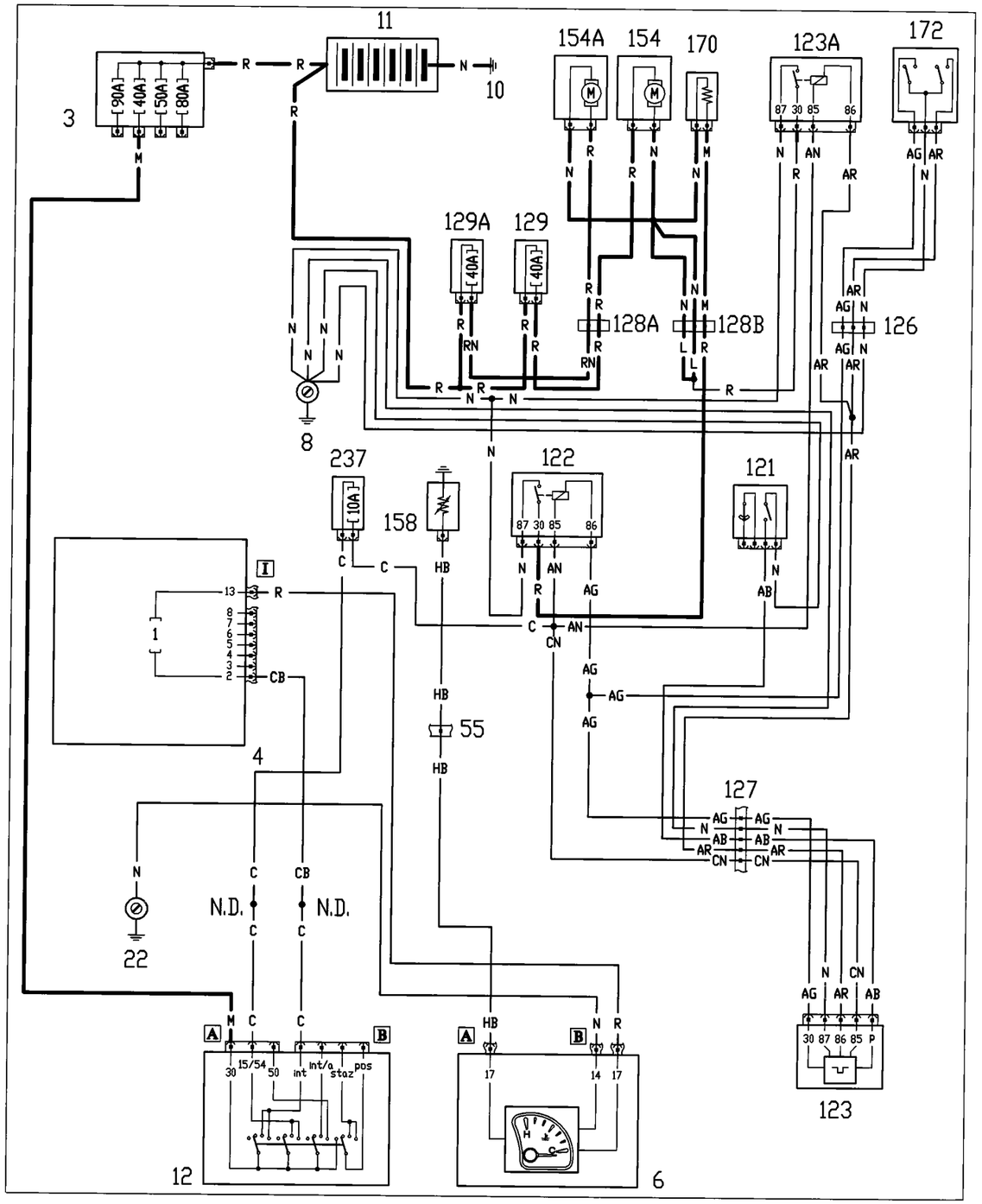

Location of components

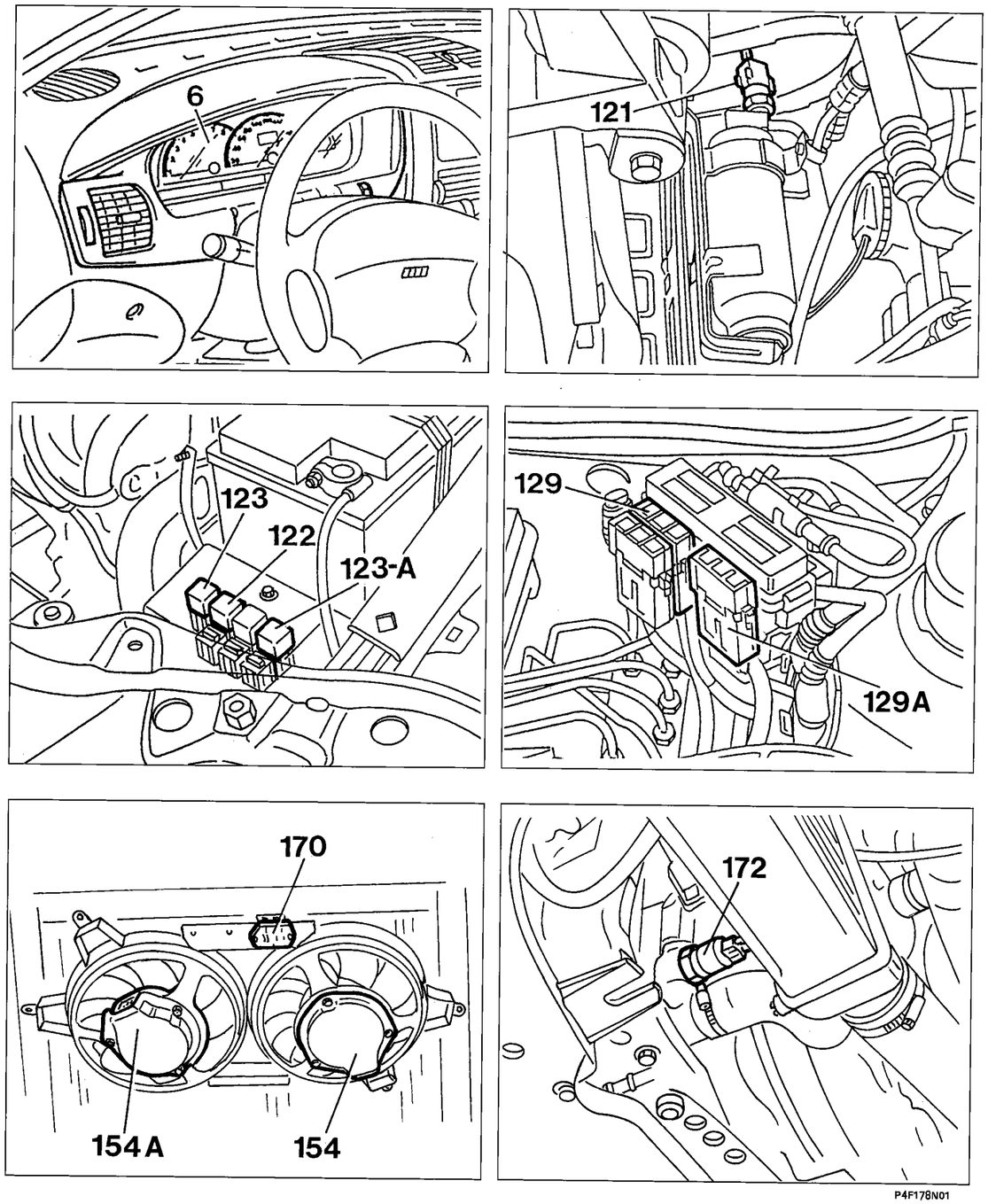

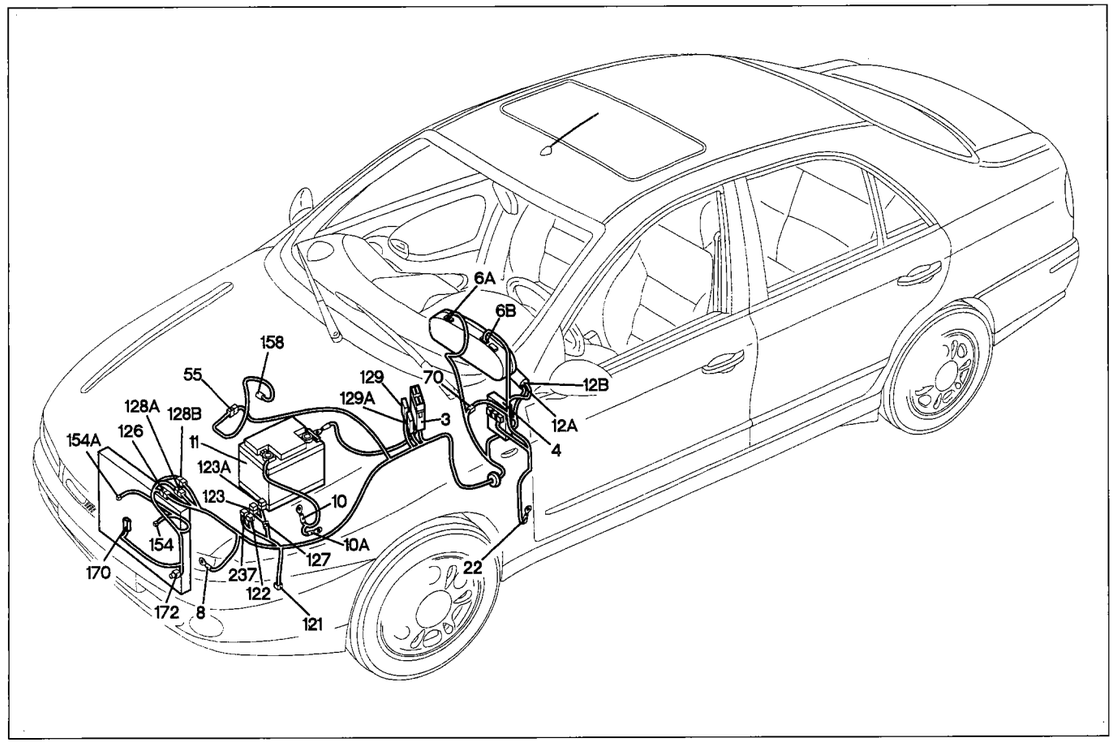

P4F179N01

Versions with air conditioner

Engine cooling system - Engine coolant temperature gauge (1910 engine)

Key to components

3 Power fuse box
4 Fuse and relay unit
6 Instrument panel
8 Front left earth
10 Battery earth on engine
10A Battery earth on body shell
11 Battery
12 Ignition switch
22 Left dashboard earth
55 Front left/engine cables connection
121 Three-stage pressure switch
122 Engine cooling fan low speed relay
123 Engine cooling fan high speed timer
123A Engine cooling fan high speed relay
126 Front/radiator cables connection
127 Front left cable/relay mounting bracket cable connection
128 Front/radiator cables connection
129 Engine cooling fan power fuse
129A 2nd engine cooling fan power fuse
154 Engine cooling fan
154A Engine cooling fan
158 Water temperature sensor for instrument
170 Resistor for engine cooling fan
237 FIAT CODE fuse
N.D. Ultrasound-soldered joint taped in wiring loom

4F231N

55 Front left/engine cables connection

1910

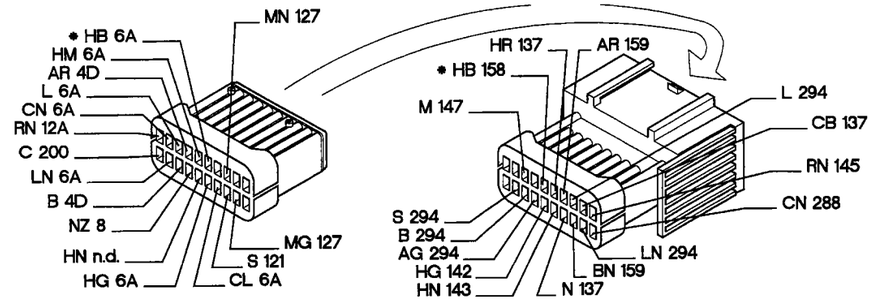

127 Front left cable/relay mounting bracket cable connection

1910

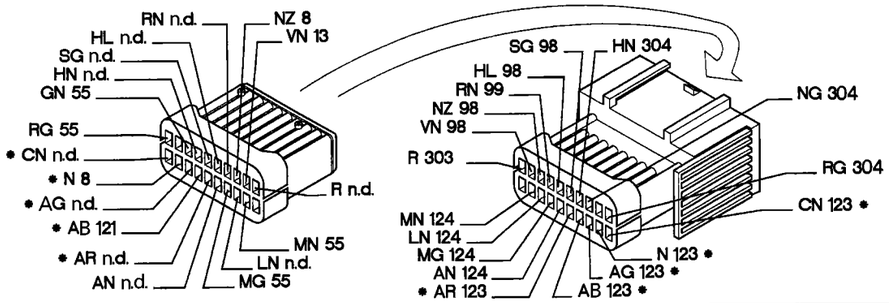

126 Front/radiator cables connection

1910

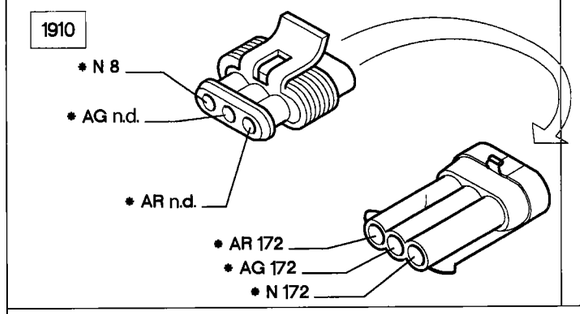

128A Front/radiator cables connection

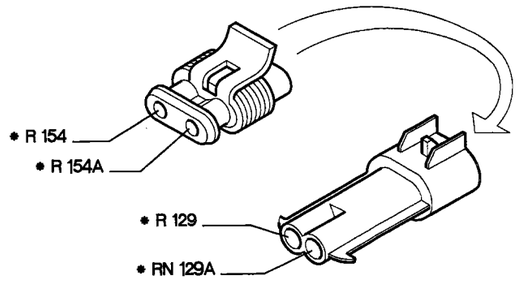

128B Front/radiator cables connection

1910

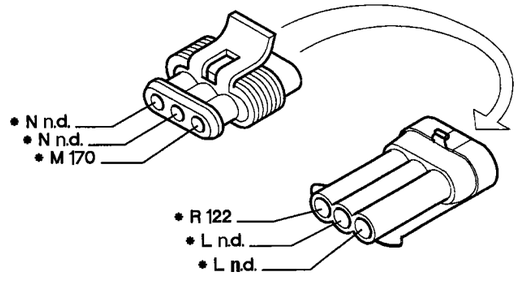

P4F180N01

* The cables involved in the wiring diagram are marked with an asterisk.

4F232N

Versions with air conditioner
Engine cooling system - Engine coolant temperature gauge (2387 engine)

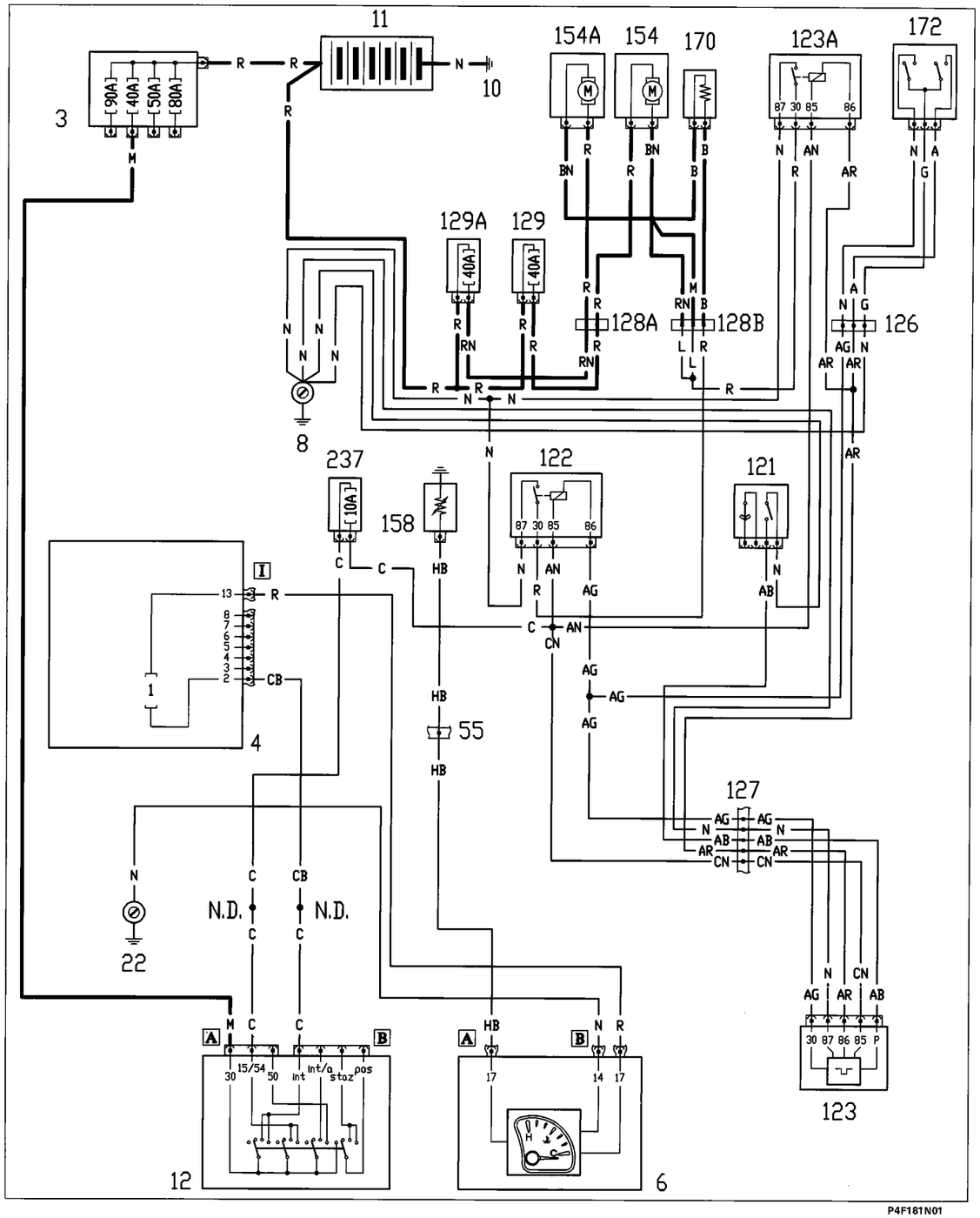

4F233N

Location of components

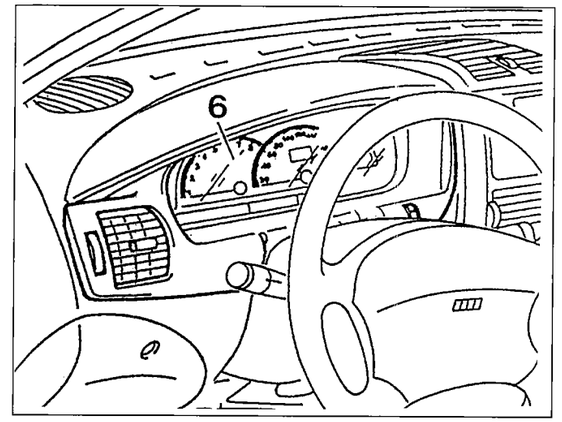

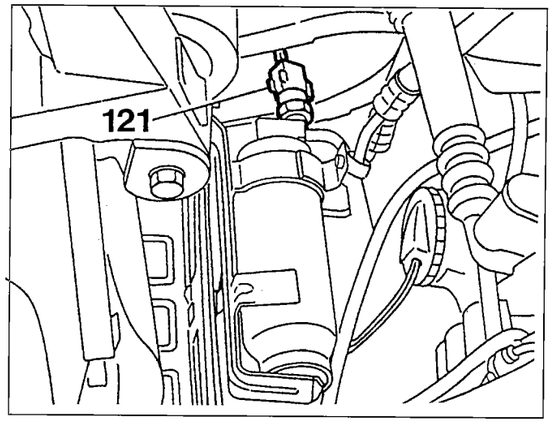

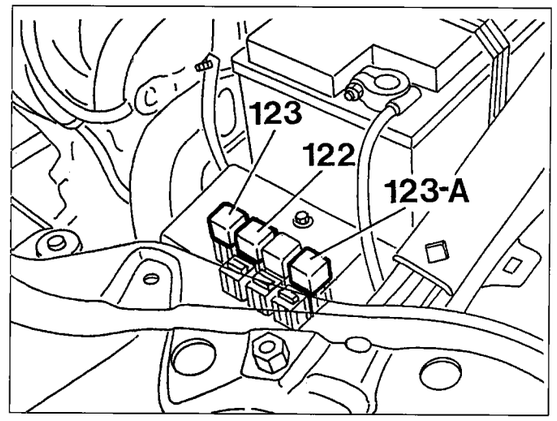

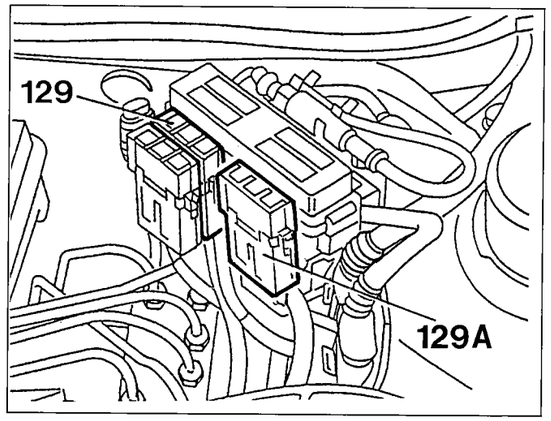

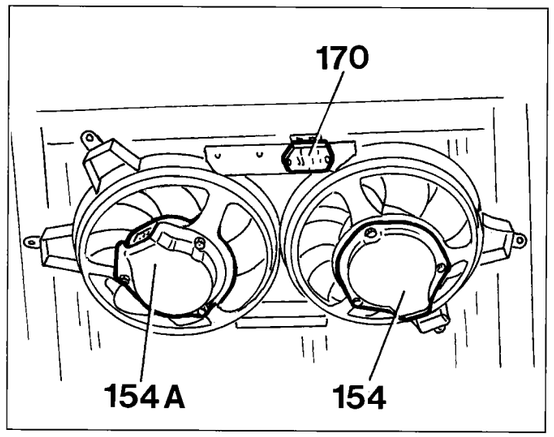

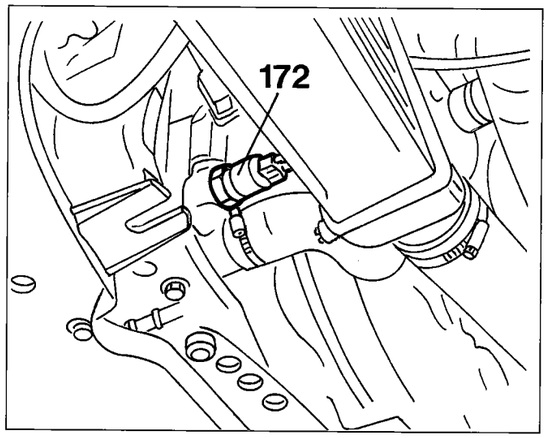

P4F178N01

4F234N

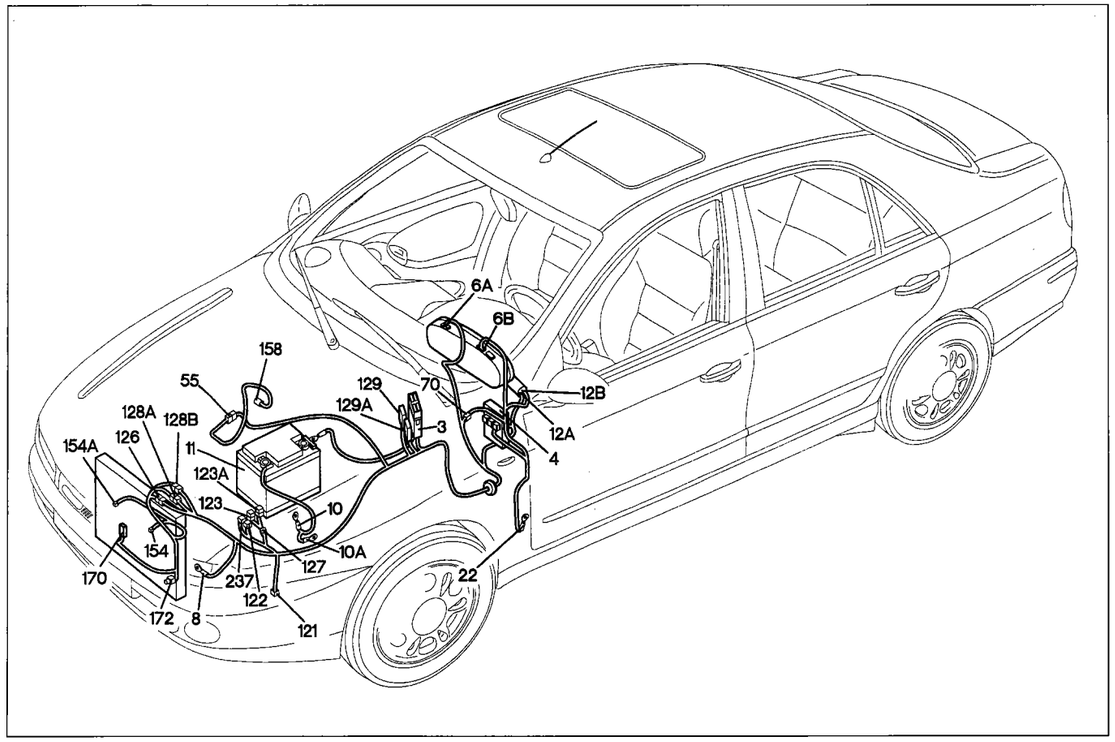

P4F183N01

Versions with air conditioner

Engine cooling system - Engine coolant temperature gauge (2387 engine)

Key to components

3 Power fuse box
4 Fuse and relay unit
6 Instrument panel
8 Front left earth
10 Battery earth on engine
10A Battery earth on body shell
11 Battery
12 Ignition switch
13 Front right/left cables connection
22 Left dashboard earth
55 Front left/engine cables connection
70 Dashboard/front cables connection
121 Three-stage pressure switch
122 Engine cooling fan low speed relay

123 Engine cooling fan high speed timer

123A Engine cooling fan high speed relay

126 Front/radiator cables connection
127 Front left cable/relay mounting bracket cable connection
128 Front/radiator cables connection
129 Engine cooling fan power fuse

129A 2nd engine cooling fan power fuse

154 Engine cooling fan

154A Engine cooling fan
158 Water temperature sensor for instrument
170 Resistor for engine cooling fan

237 Fiat CODE fuse

N.D. Ultrasound-soldered joint taped in wiring loom

4F235N

55 Front left/engine cables connection

2387

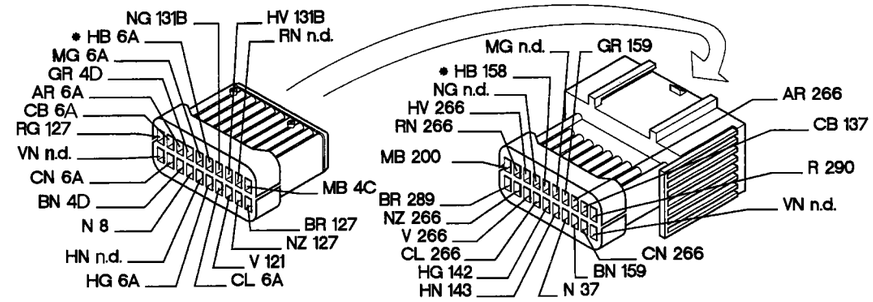

127 Front left cable/relay mounting bracket cable connection

2387

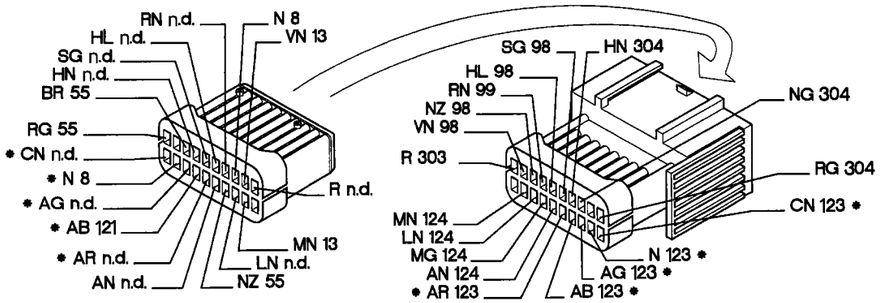

126 Front/radiator cables connection

2387

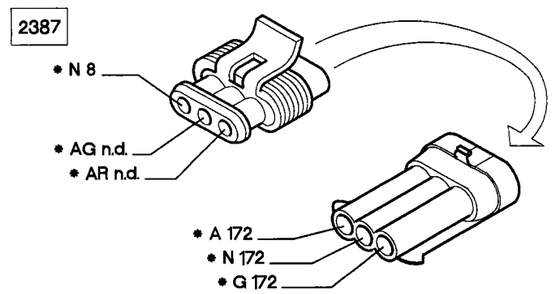

128A Front/radiator cables connection

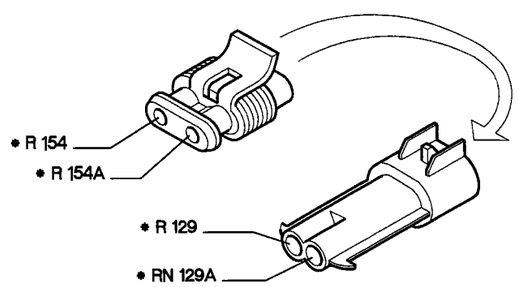

128B Front/radiator cables connection

2387

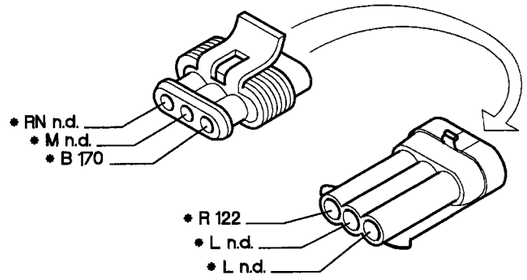

P4F184N01

* The cables involved in the wiring diagram are marked with an asterisk.

4F236N

Versions without air conditioner
Engine cooling system - Engine coolant temperature gauge - Manual heater: car interior ventilation (1910-75 engine)

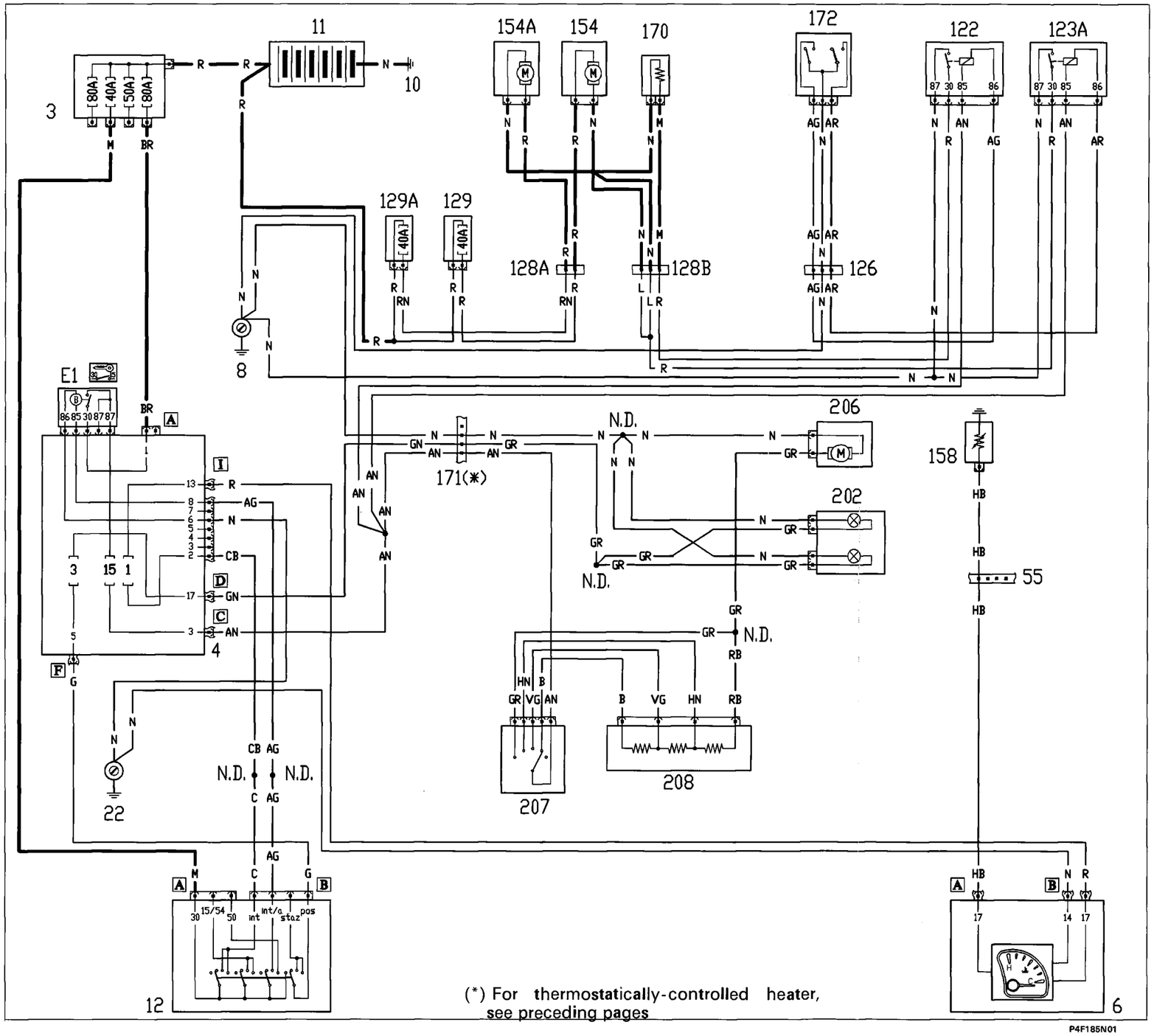

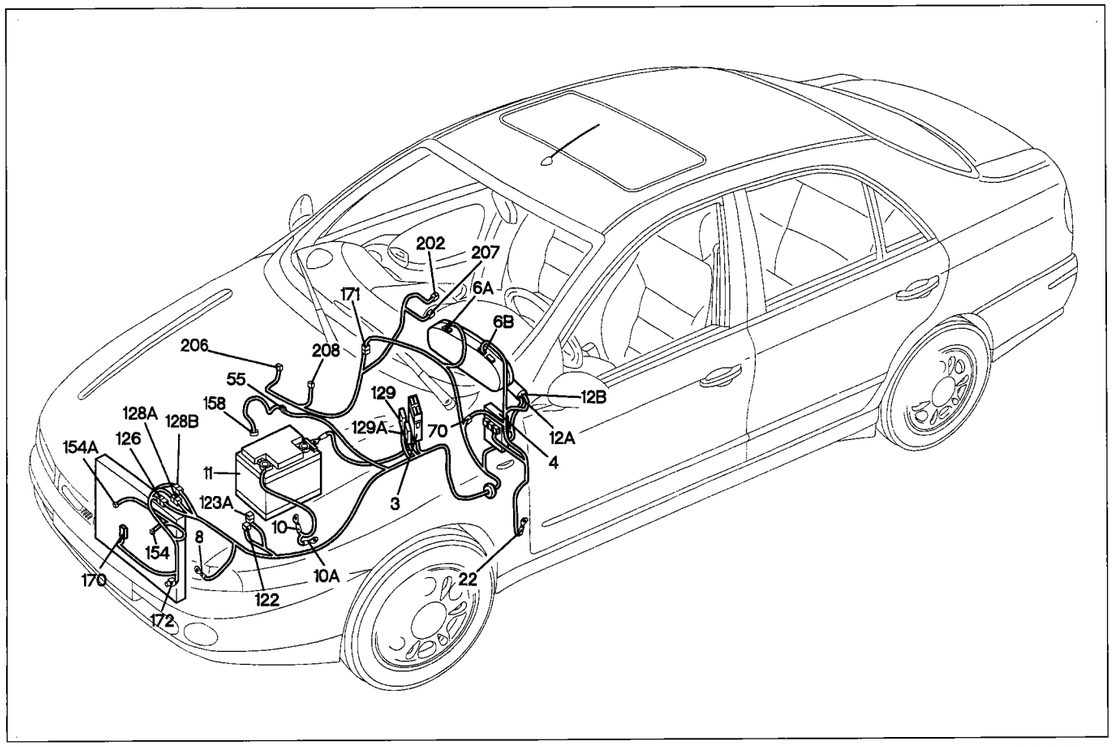

P4F187N01

Versions without air conditioner

Engine cooling system - Engine coolant temperature gauge - Manual heater: car interior ventilation (1910-75 engine)

Key to components

3 Power fuse box
4 Fuse and relay unit
6 Instrument panel
8 Front left earth
10 Battery earth on engine
10A Battery earth on body shell
11 Battery
12 Ignition switch
22 Left dashboard earth
55 Front left/engine cables connection
63 Thermostat on radiator
70 Dashboard/front cables connection
122 Engine cooling fan low speed relay

123A Engine cooling fan high speed relay

126 Front/radiator cables connection
128 Front/radiator cables connection
129 Engine cooing fan power fuse

129A 2nd engine cooling fan power fuse

154 Engine cooling fan
154A Engine cooling fan
158 Water temperature sensor for instrument
170 Resistor for engine cooling fan

171 Heater unit cables connections
172 Two-stage thermostat
202 Bulb for heater/air conditioner controls symbol illumination
206 Car interior climate control fan

207 Electric fan adjustment switch

208 Fan speed resistor

N.D. Ultrasound-soldered joint taped in wiring loom

4F238N

126 Front/radiator cables connection

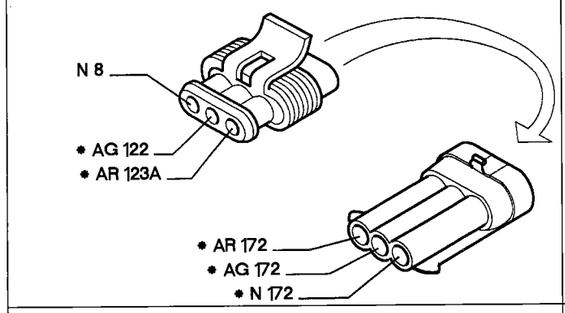

128A Front/radiator cables connection

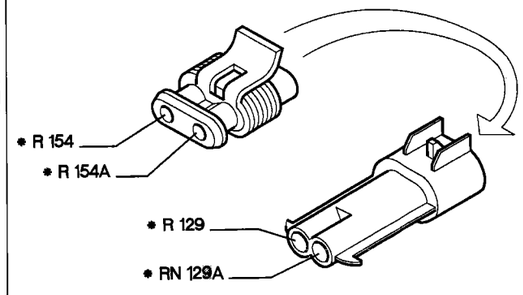

128B Front/radiator cables connection

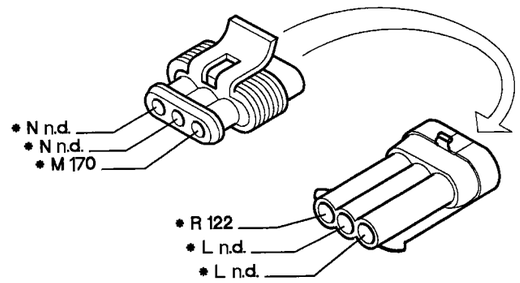

129 Engine cooling fan power fuse

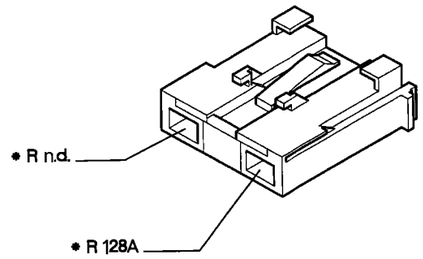

171 Heater unit cables connection

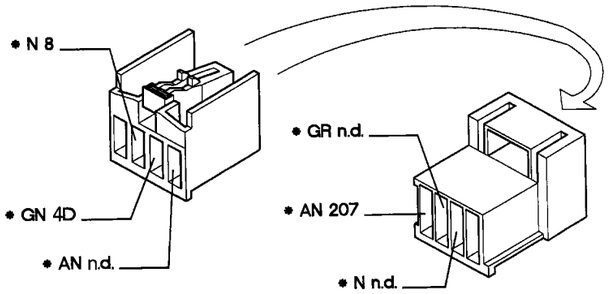

206 Car interior climate control fan

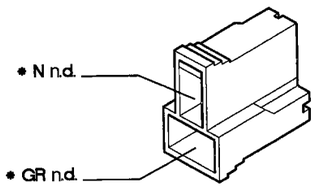

207 Electric fan speed adjustment switch

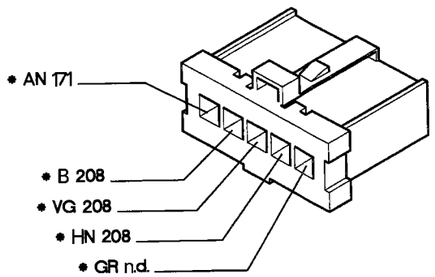

P4F188N01

* The cables involved in the wiring diagram are marked with an asterisk.

4F239N

Versions without air conditioner
Engine cooling system - Engine coolant temperature gauge - Manual heater: car interior ventilation (1910-100 engine)

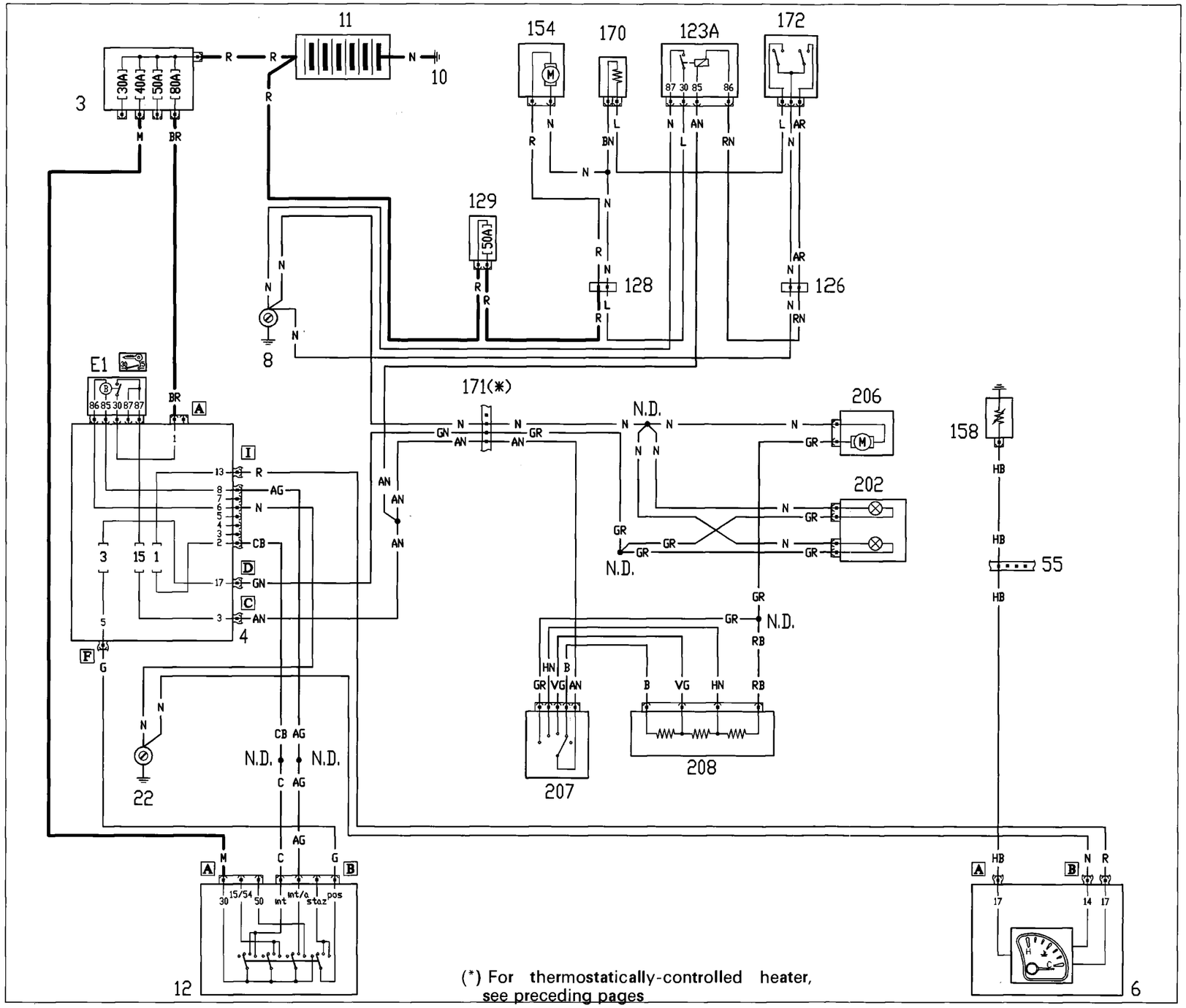

4F240N

P4F189N01

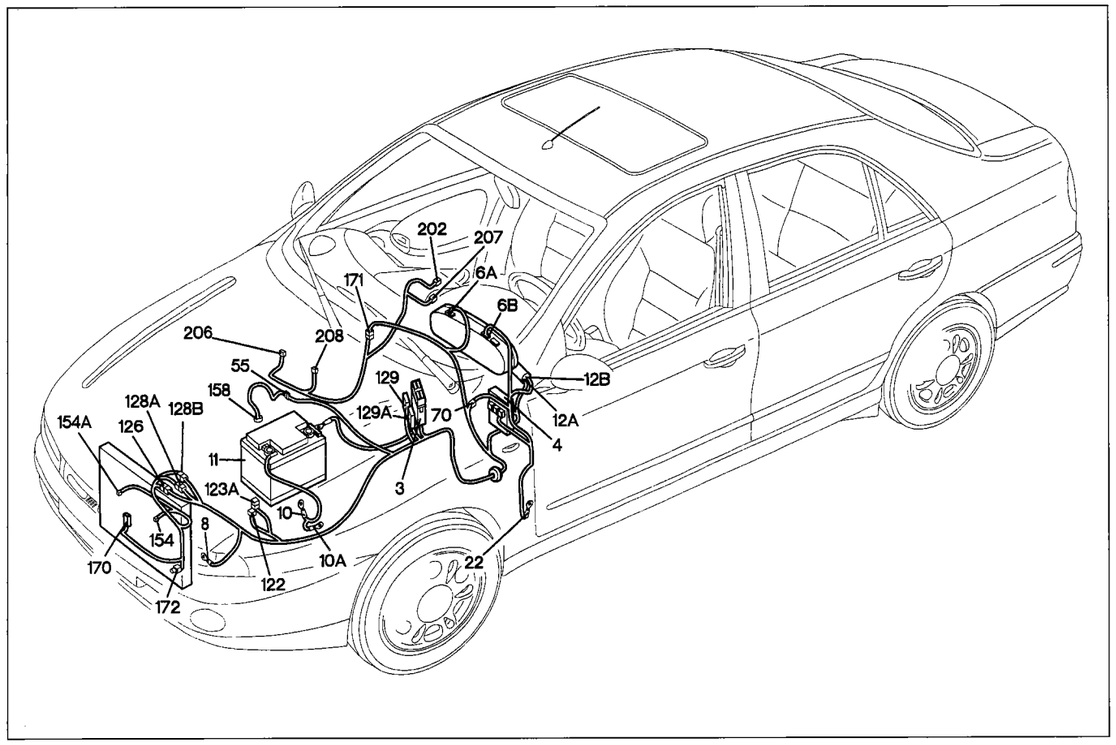

P4F191N01

Versions without air conditioner

Engine cooling system - Engine coolant temperatur coolant - Manual heater: car interior ventilation (1910-100 engine)

Key to components

3 Power fuse box
4 Fuse and relay unit
6 Instrument panel
8 Front left earth
10 Battery earth on engine
10A Battery earth on body shell
11 Battery
12 Ignition switch
22 Left dashboard earth
55 Front left/engine cables connection
63 Thermostat on radiator
70 Dashboard/front cables connection
123A Engine cooling fan high speed relay

126 Front/radiator cables connection
128 Front/radiator cables connection
129 Engine cooling fan power fuse

154 Engine cooling fan
158 Water temperature sensor for instrument
170 Resistor for engine cooling fan

171 Heater unit cables connections
172 Two-stage thermostat
202 Bulb for heater/air conditioner controls symbol illumination

206 Car interior climate control fan

207 Electric fan speed adjustment switch

208 Fan speed resistor

N.D. Ultrasound-soldered joint taped in wiring loom

4F241N

120 Front/radiator cables connection

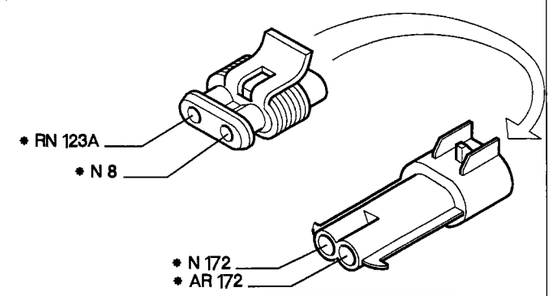

128 Front/radiator cables connection

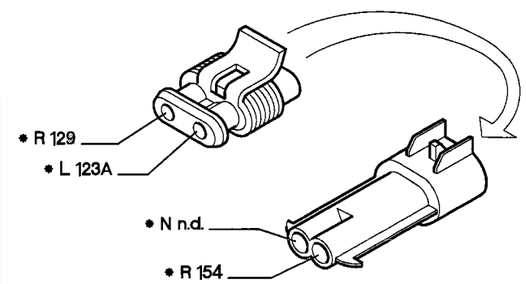

120 Engine cooling fan power fuse

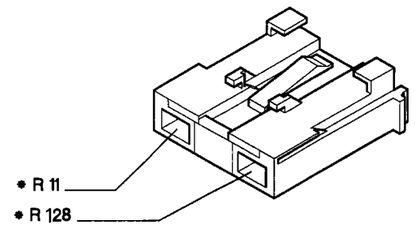

154 Engine cooling fan

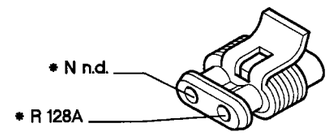

171 Heater cables connection

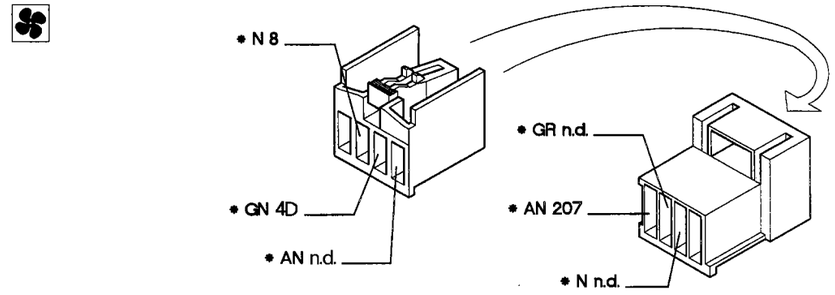

206 Car interior climate control fan

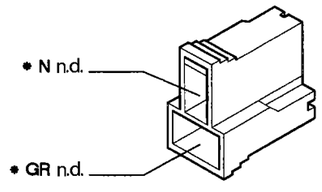

207 Electric fan speed adjustment switch

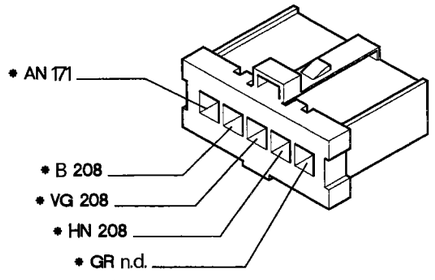

P4F192N01

* The cables involved in the wiring diagram are marked with an asterisk.

4F242N

Versions without air conditioner
Engine cooling system - Engine coolant temperature gauge - Manual heater: car interior ventilation (2387 engine)

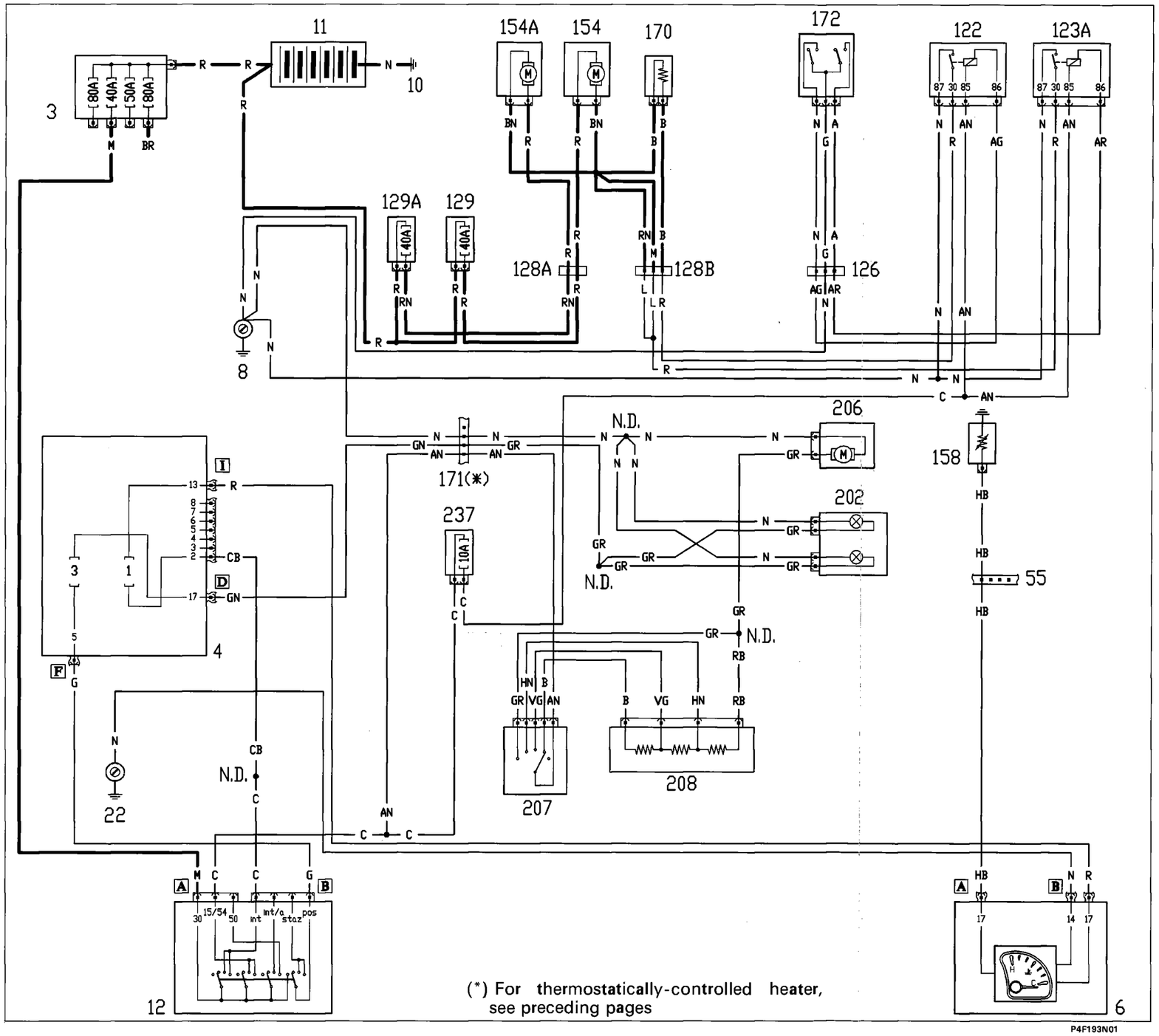

4F243N

55.

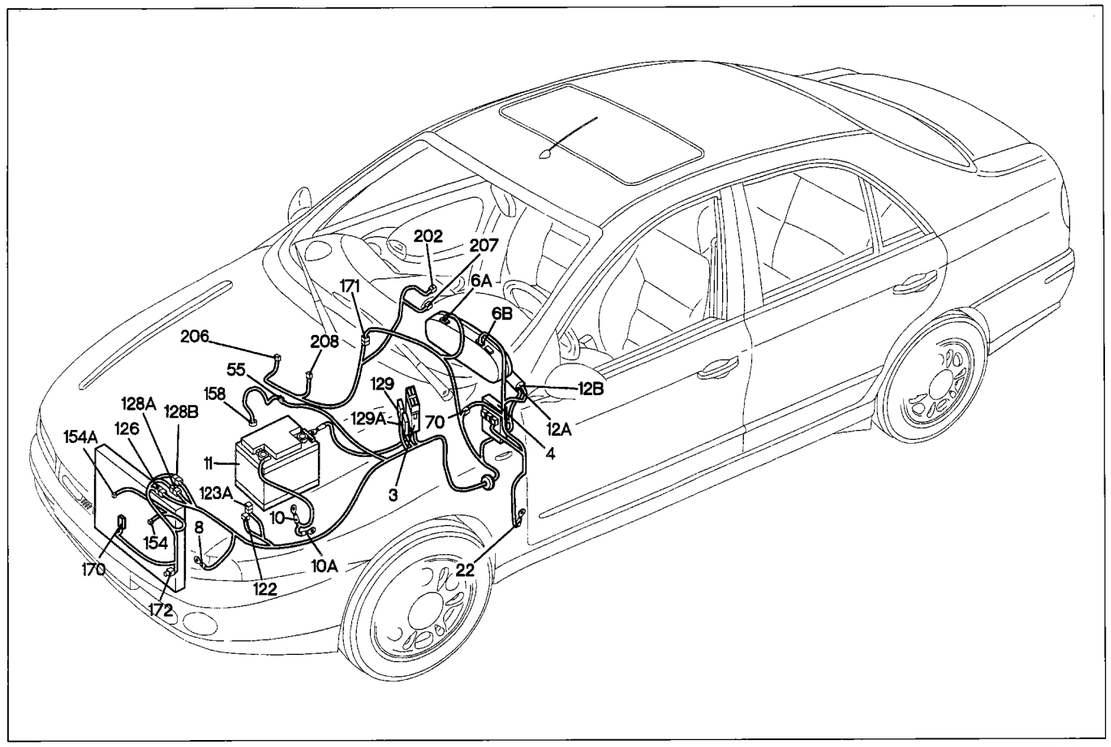

P4F195N01

Versions without air conditioner

Engine cooling system - Engine coolant temperature gauge - Manual heater: car interior ventilation (2387 engine)

Key to components

3 Power fuse box
4 Fuse and relay unit
6 Instrument panel
8 Front left earth
10 Battery earth on engine
10A Battery earth on body shell
11 Battery
12 Ignition switch
22 Left dashboard earth
55 Front left/engine cables connection
63 Thermostat on radiator
70 Dashboard/front cables connection
122 Engine cooling fan low speed relay

123A Engine cooling fan high speed relay

126 Front/radiator cables connection
128 Front/radiator cables connection
129 Engine cooling fan power fuse

129A 2nd engine cooling fan power fuse

154 Engine cooling fan
154A Engine cooling fan
158 Water temperature sensor for instrument
170 Resistor for engine cooling fan

171 Heater unit cables connections
172 Two-stage thermostat
202 Bulb for heater/air conditioner controls symbol illumination
206 Car interior climiate control fan

207 Electric fan speed adjustment switch

208 Fan speed resistor

N.D. Ultrasound-soldered joint taped in wiring loom

4F244N

126 Front/radiator cables connection

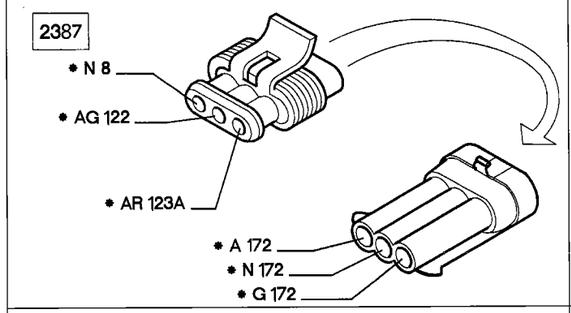

128A Front/radiator cables connection

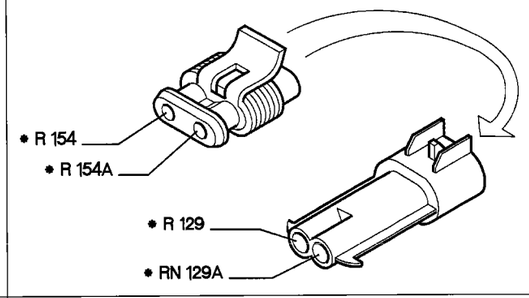

128B Front/radiator cables connection

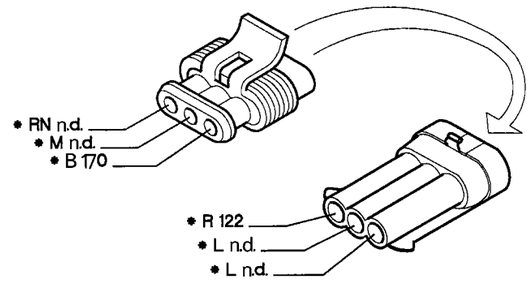

129 Engine cooling fan power fuse

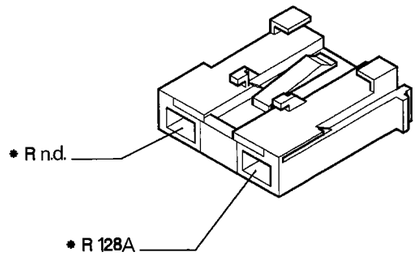

171 Heater unit cables connection

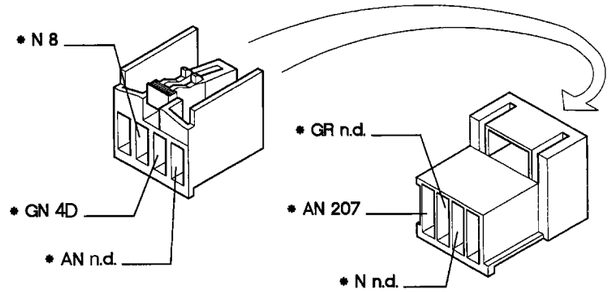

206 Car interior climate control fan

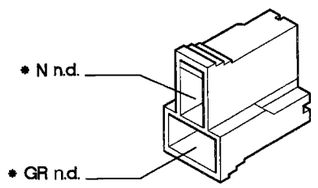

207 Electric fan speed adjustment switch

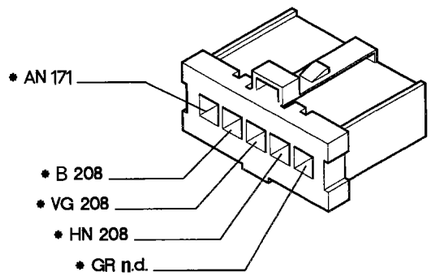

P4F196N01

* The cables involved in the wiring diagram are marked with an asterisk.

4F245N

Starting system - Electronic injection - Recharging system and warning light - Low engine oil pressure warning light - Heater plugs warning light - Fuel injection fault warning light - Fuel preheating (1910-100 engine)

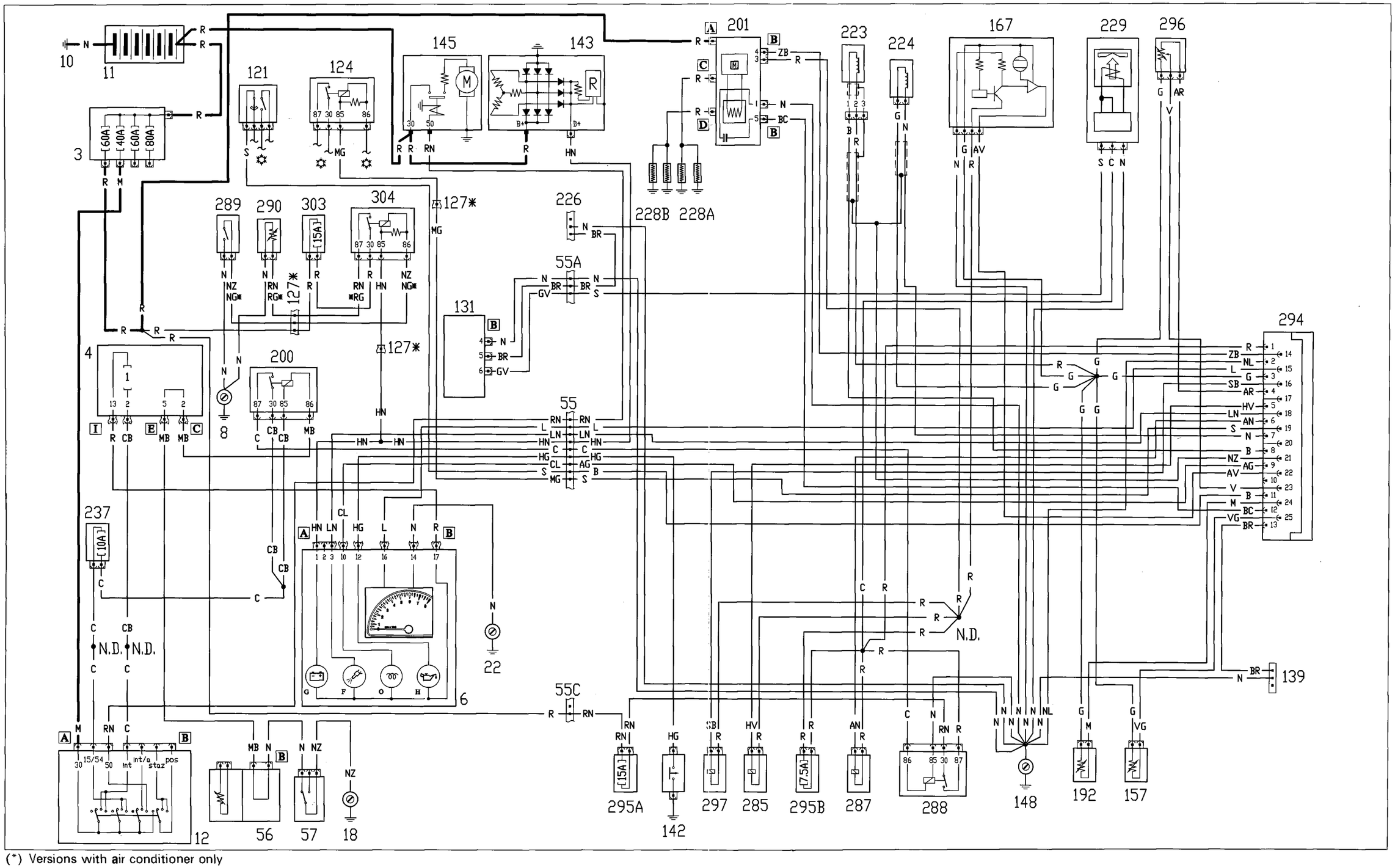

(*) Versions with air conditioner only

4F246N

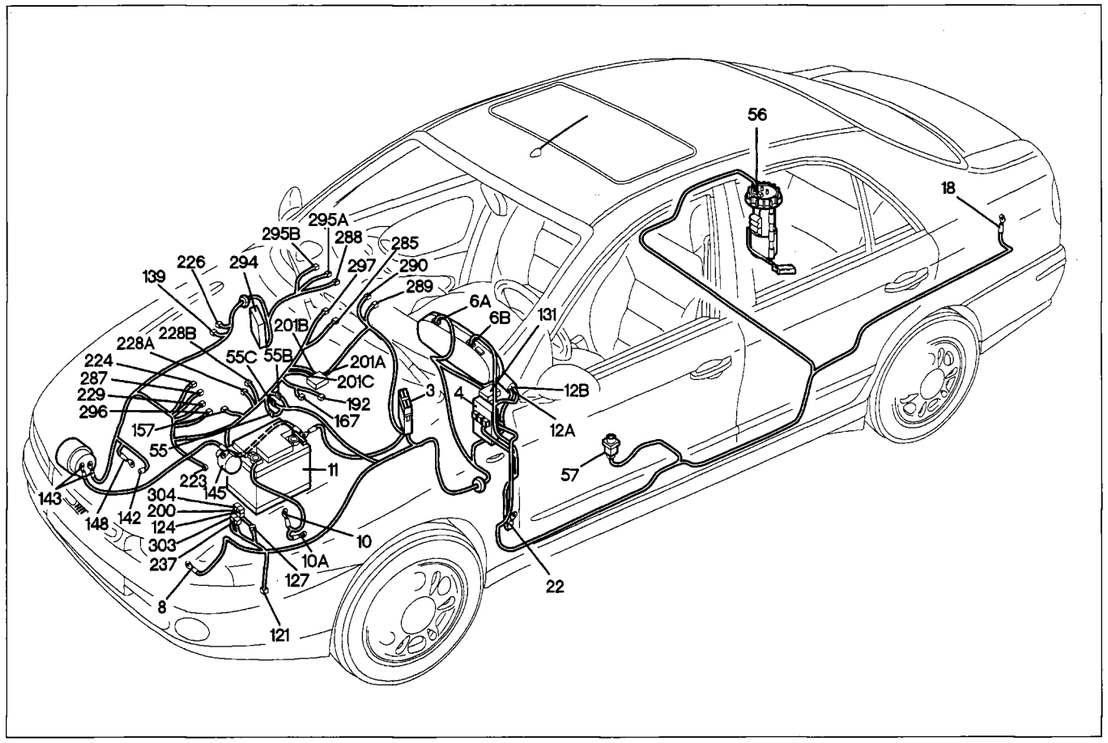

P4F199N01

Starting system - Electronic injection - Recharging system and warning light - Low engine oil pressure warning light - Heater plugs warning light - Fuel injection fault warning light - Fuel preheating (1910-100 engine)

Key to components

3 Power fuse box
4 Fuse and relay unit
6 Instrument panel
8 Front left earth
10 Battery earth on engine
10A Battery earth on body shell
11 Battery
12 Ignition switch
18 Rear left earth
55 Front left/engine cables connection
55A Front left/engine cables connection
55C Front left/engine cables connection
56 Fuel gauge sender unit
57 Inertial switch
121 Three-stage pressure switch
124 Air conditioner compressor relay
127 Front left cable/relay mounting bracket cable connection
131 Fiat CODE electronic control unit
137 Car speed sensor
139 Diagnostic socket for injection
142 Low oil pressure warning light switch

143 Alternator
145 Starter motor
148 Earth for electronic injection
157 Water temperature sensor for injection

167 Air flowmeter
168 Timing sensor
192 Air temperature sensor
200 Electrostop relay (TD)
201 Plug preheating control unit (TD)
223 Rpm sensor (TD)
224 Instrumented fuel injector (TD)
226 Diagnostic socket for FIAT CODE system
228 Heater plugs (TD)
229 Engine cut-out electrostop (TD)
237 Fiat CODE fuse
285 E.G.R. solenoid (TD)
287 Solenoid on diesel pump for advance (TD)

288 Electronic fuel injection relay (TD)
289 PCT thermal contact (TD)
290 PCT heater resistor (TD)
294 Electronic fuel injection control unit (1910T-D-100)
295A Fuel injection fuse (1910TD-100)
295B Fuel injection fuse (1910TD-100)
296 Potentiometer on throttle lever (1910TD)

297 Fast idle valve (1910TD)

N.D. Ultrasound-soldered joint taped in wiring loom

4F247N

55 Front left/engine cables connection

1910-100

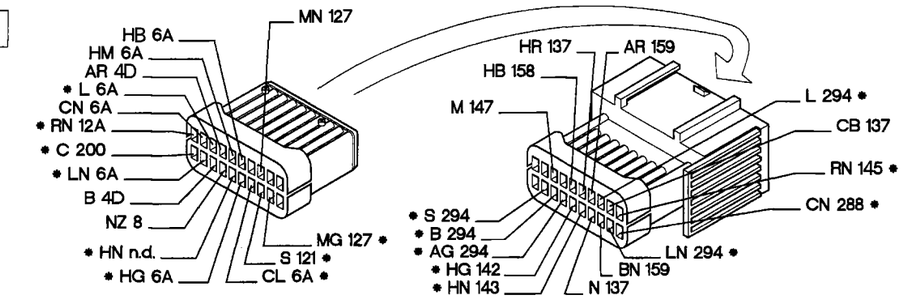

55A Front left/engine cables connection

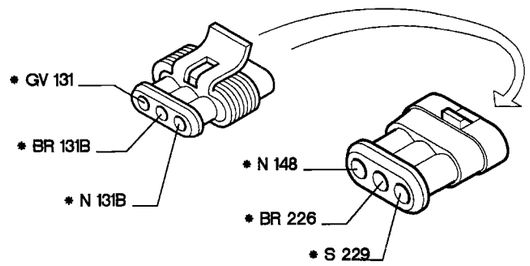

55C Front left/engine cables connection

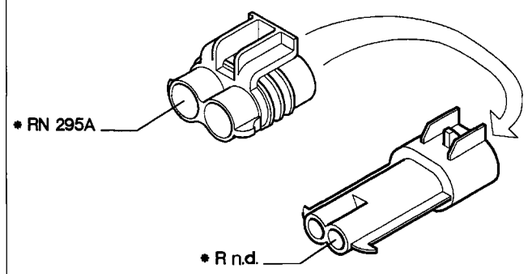

294 Electronic fuel injection control unit (1910TD-100)

1910-100

1	* R n.d.	9	* AG 55	19	* S 55
2	* NL 148	11	* B 55	21	* NZ n.d.
3	* G n.d.	12	* BC 201B	22	* AV 167
4	* AR 296	13	* BR 139	23	* V 296
5	* HV 285	14	* ZB 201B	24	* M 192
6	* AN 287	15	* L 55	25	* VG 157
7	* N 224	16	* SB 297		
8	* B 223	18	* LN 55		

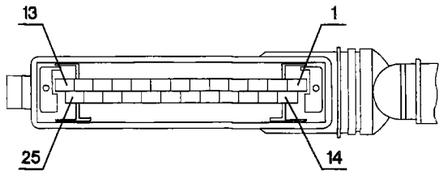

P4F200N01

* The cables involved in the wiring diagram are marked with an asterisk.

4F248N

55.

Starting system - Electronic injection - Recharging system and warning light - Low engine oil pressure warning light - Heater plugs warning light - Fuel injection fault warning light - Fuel preheating (2387 engine)

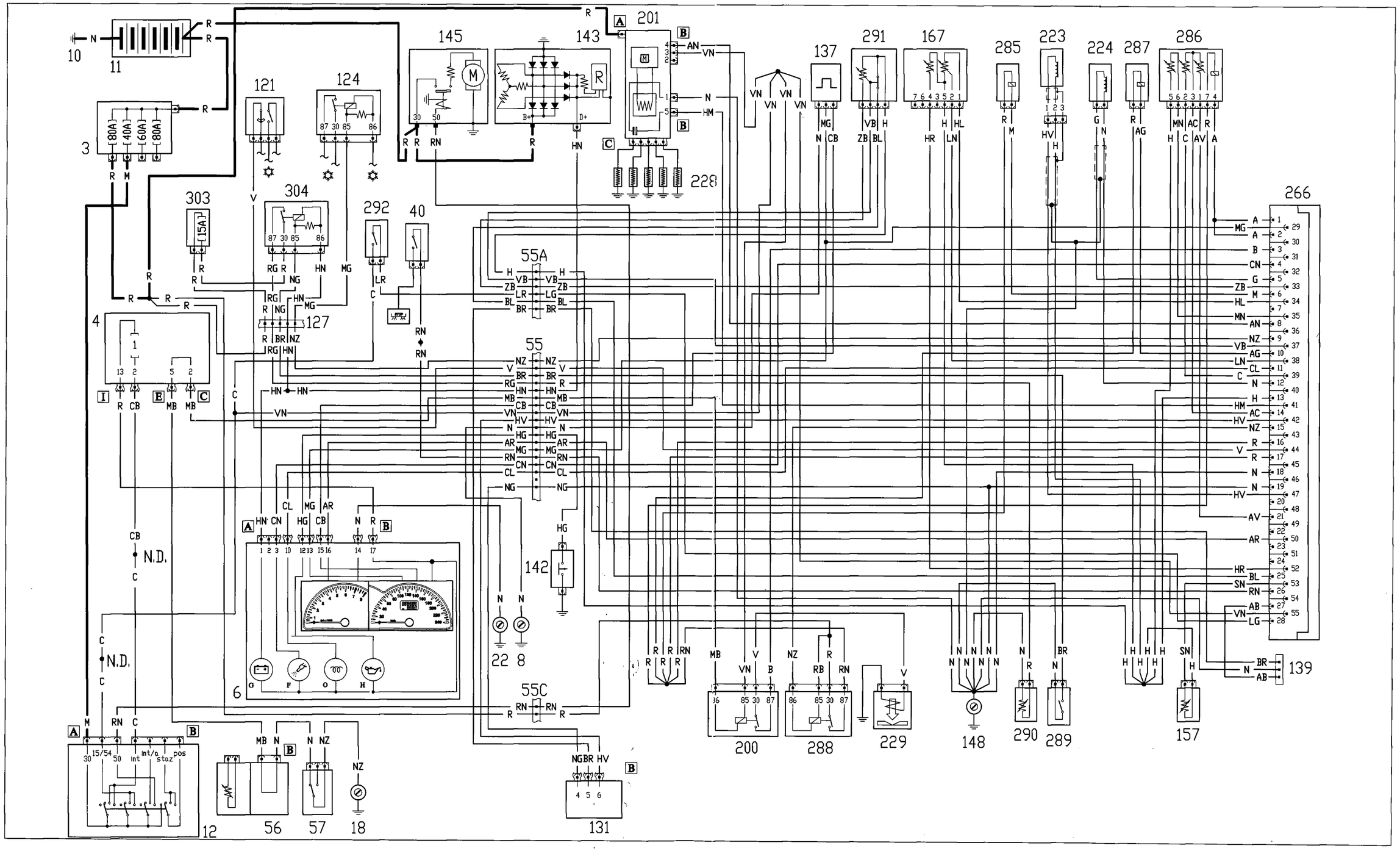

4F249N

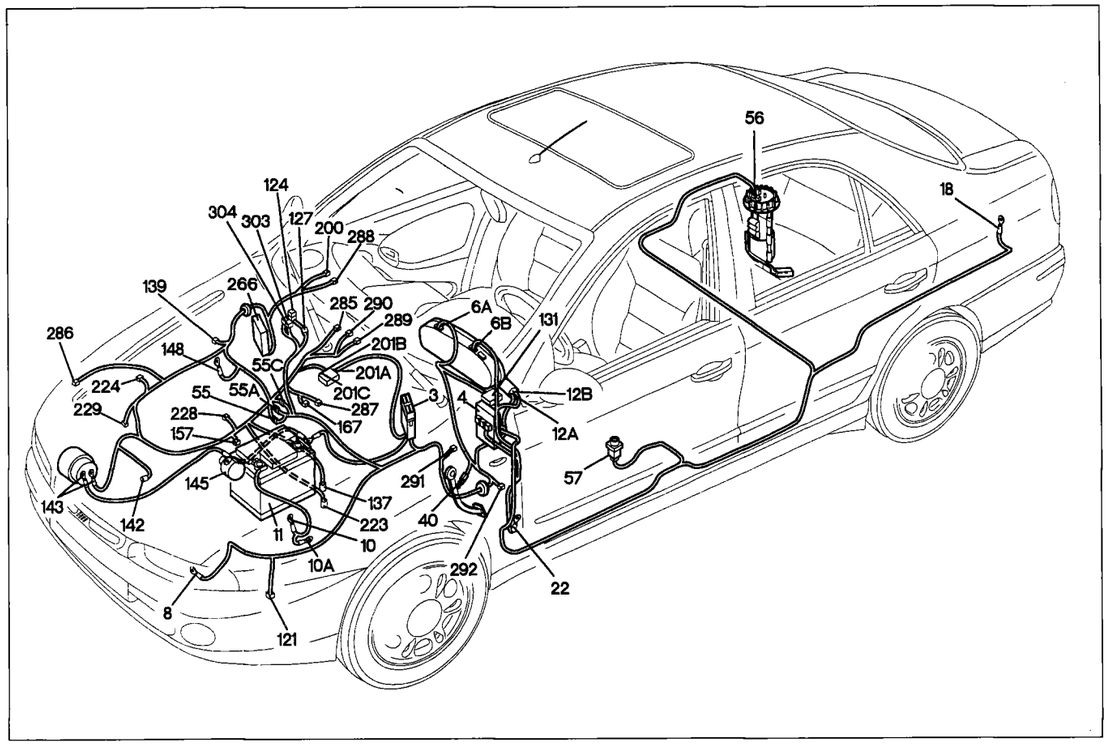

P4F203N01

Starting system - Electronic injection - Recharging system and warning light - Low engine oil pressure warning light - Heater plug warning light - Fuel injection fault warning light - Fuel preheating (2387 engine)

Key to components

3 Power fuse box
4 Fuse and relay unit
6 Instrument panel
8 Front left earth
10 Battery earth on engine
10A Battery earth on body shell
11 Battery
12 Ignition switch
18 Rear left earth
22 Left dashboard earth
40 Stop lights switch
55 Front left/engine cables connection
55A Front left/engine cables connection
55C Front left/engine cables connection
56 Fuel gauge sender unit
57 Inertial switch
121 Three-stage pressure switch
124 Air conditioner compressor relay

127 Front left cable/relay mounting bracket cable connection
131 Fiat CODE electronic control unit
137 Car speed sensor
139 Diagnostic socket for injection
142 Low oil pressure warning light switch

143 Alternator
145 Starter motor

148 Earth for electronic fuel injection
157 Water temperature sensor for injection

167 Air flowmeter
200 Electrostop relay (TD)
201 Heater plug control unit (TD)
223 Rpm sensor (TD)
224 Instrumented injector (TD)
228 Heater plugs (TD)
229 Engine cut-out electrostop (TD)
266 Electronic fuel injection control unit (2387TD)

285 E.G.R. solenoid (TD)
286 Diesel pump (2387TD)
287 Solenoid on diesel pump for advance (TD)

288 Electronic fuel injection relay (TD)
289 PCT thermal contact (TD)
290 PCT heater resistor (TD)
291 Accelerator pedal potentiometer (2387TD)
292 Clutch pedal switch (2387TD)
303 Diesel preheating fuse (TD)
304 Diesel preheating relay (TD)

N.D. Ultrasound-soldered joint taped in wiring loom

55 Front left/engine cables connection

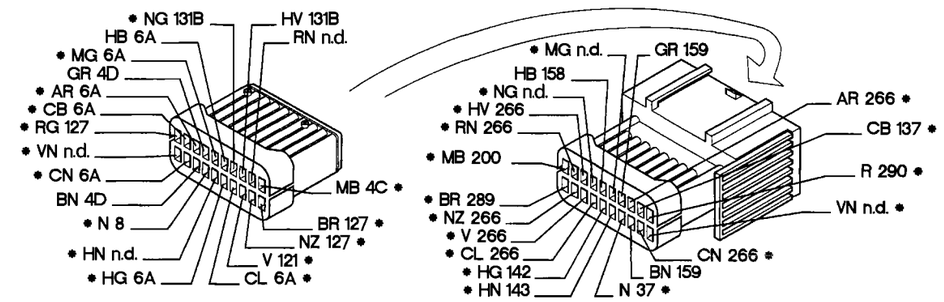

55A Front left/engine cables connection

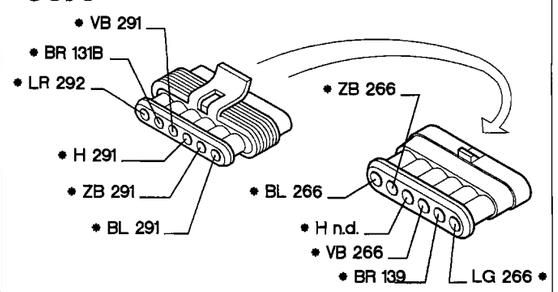

55C Front left/engine cables connection

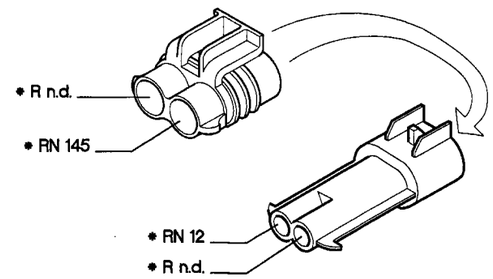

266 Electronic fuel injection control unit (2387)

1	• A n.d.	17	• R n.d.	41	• HM 201
2	• A n.d.	18	• N 148	42	• HV 55
3	• B 200	19	• N n.d.	44	• V 55
4	• CN 55	21	• AV 286	47	• HV 223
5	• G 224	25	• BL 55A	50	• AR 55
6	• M 285	26	• RN 55A	52	• HR 167
8	• AN 201	27	• AB 139	53	• SN 157
9	• NZ 55	28	• LG 55A	55	• VN n.d.
10	• AG 287	29	• MG n.d.		
11	• CL 55	33	• ZB 55A		
12	• N 224	34	• HL 167		
13	• H n.d.	35	• MN 286		
14	• AC 286	37	• VB 55A		
15	• NZ 288	38	• LN 167		
16	• R n.d.	39	• C 286		

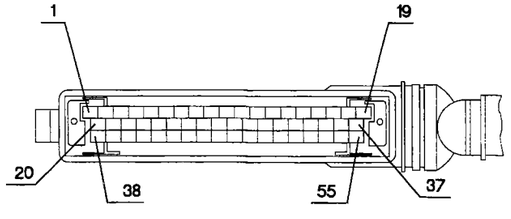

P4F204N01

* The cables involved in the wiring diagram are marked with an asterisk.

4F251N

Starting system - E.G.R. control - Fuel injection control - Heater plugs and warning light - Fuel preheating - Recharging system and warning light - Low engine oil pressure warning light (1910-75 engine)

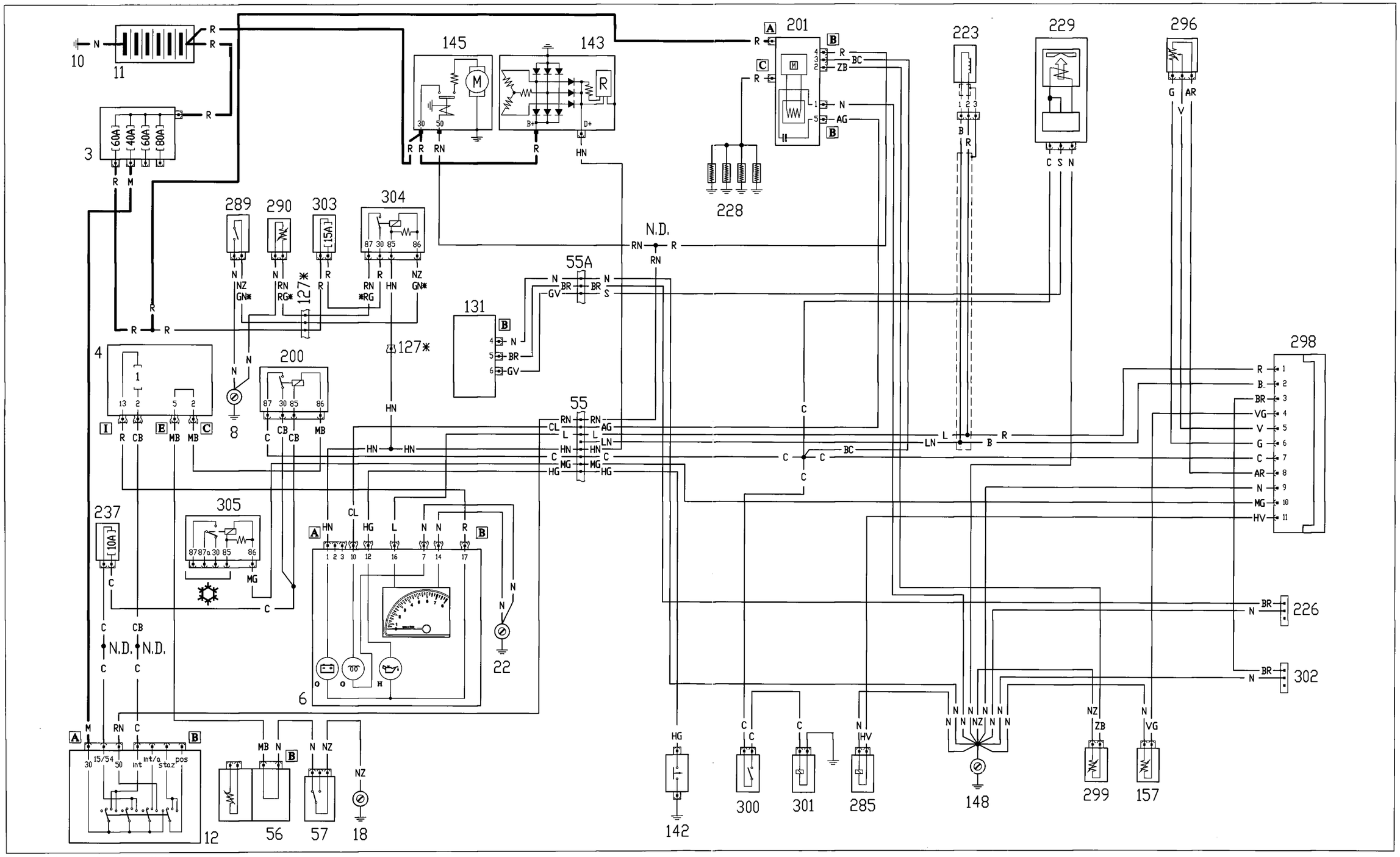

(*) Version with air conditioner only

4F252N

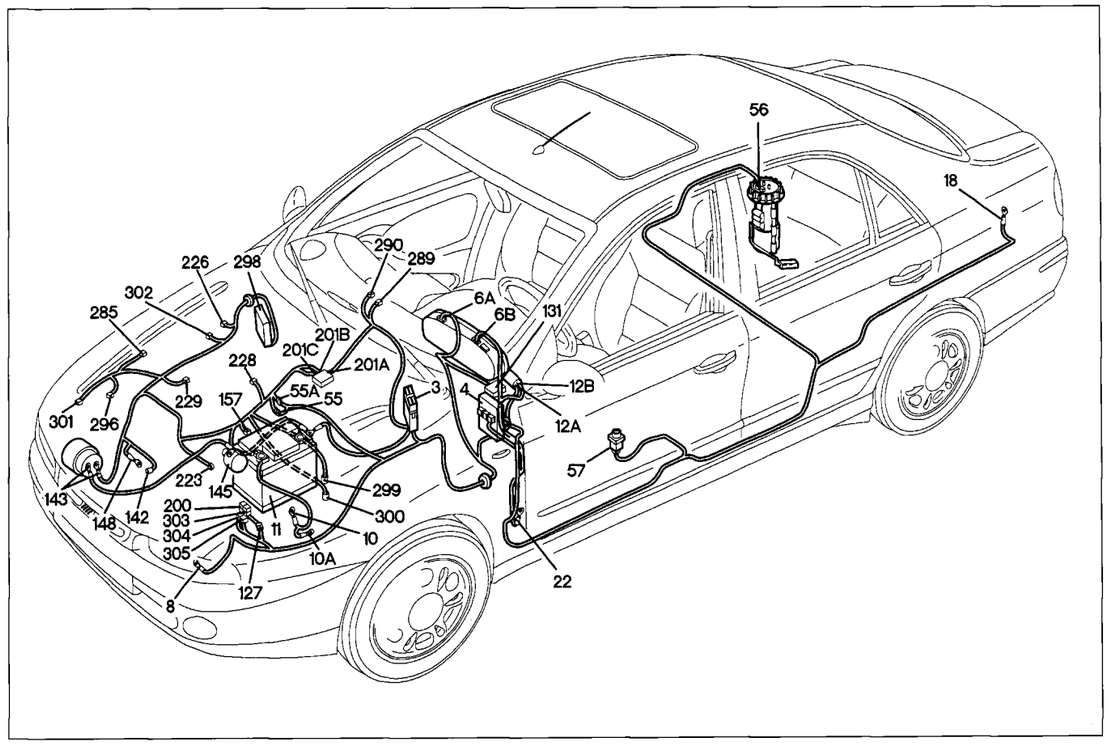

P4F207N01

Starting system - E.G.R. control - Fuel injection control - Heater plugs and warning light - Recharging system and warning light - Low engine oil pressure warning light (1910-75 engine)

Key to components

3 Power fuse box
4 Fuse and relay unit
6 Instrument panel
8 Front left earth
10 Battery earth on engine
10A Battery earth on body shell
11 Battery
12 Ignition switch
18 Rear left earth
55 Front left/engine cables connection
55A Front left/engine cables connection
55C Front left/engine cables connection
56 Fuel gauge sender unit
57 Inertial switch
127 Front left cable/relay mounting bracket cable connection
131 Fiat CODE electronic control unit
142 Low oil pressure warning light switch

143 Alternator
145 Starter motor
148 Earth for electronic injection
157 Water temperature sensor for injection

200 Electrostop relay (TD)
201 Heater plug control unit (TD)
223 Rpm sensor (TD)
226 Diagnostic socket for FIAT CODE system (1910TD)

229 Engine cut-out electrostop (TD)
237 Fiat CODE fuse
285 E.G.R. solenoid (TD)
289 PCT thermal contact (TD)
290 PCT heater resistor (TD)
296 Potentiometer on throttle lever (1910TD)

298 E.G.R. electronic control unit (1910TD-75)
299 Water temperature sensor (preheating) (1910T-D-75)
300 K.S.B. thermometric switch (1910TD-75)
301 K.S.B. device (1910TD-75)
302 Diagnostic socket for E.G.R. system (1910T-D-75)
303 Diesel preheating fuse (TD)
304 Diesel preheating fuse (TD)
305 Compressor disconnection relay (1910TD-75)

N.D. Ultrasound-soldered joint taped in wiring loom

4F253N

55 Front left/engine cables connection

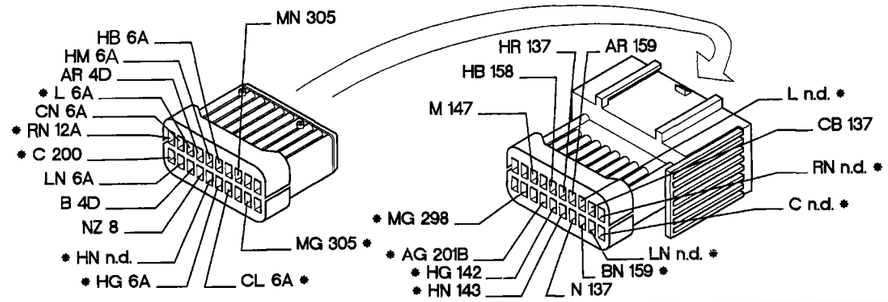

55A Front left/engine cables connection

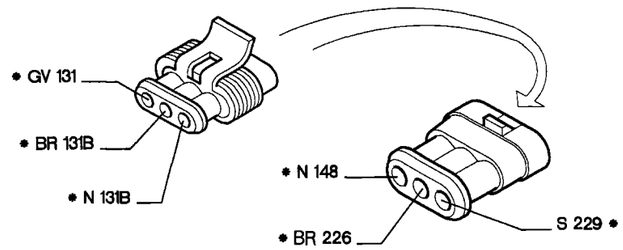

298 E.G.R. electronic control unit (1910TD-75)

1 * R n.d.
2 * B n.d.
3 * BR 229
4 * VG 157
5 * V 296
6 * G 296
7 * C n.d.
8 * AR 296
9 * N 148
10 * MG 55
11 * HV 285

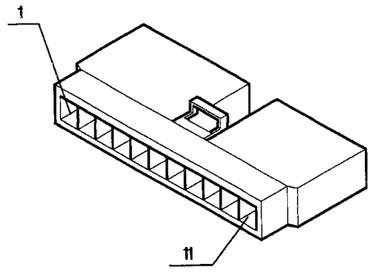

P4F208N01

* The cables involved in the wiring diagram are marked with an asterisk.

4F254N

Diagnostic socket connections (TD engines)

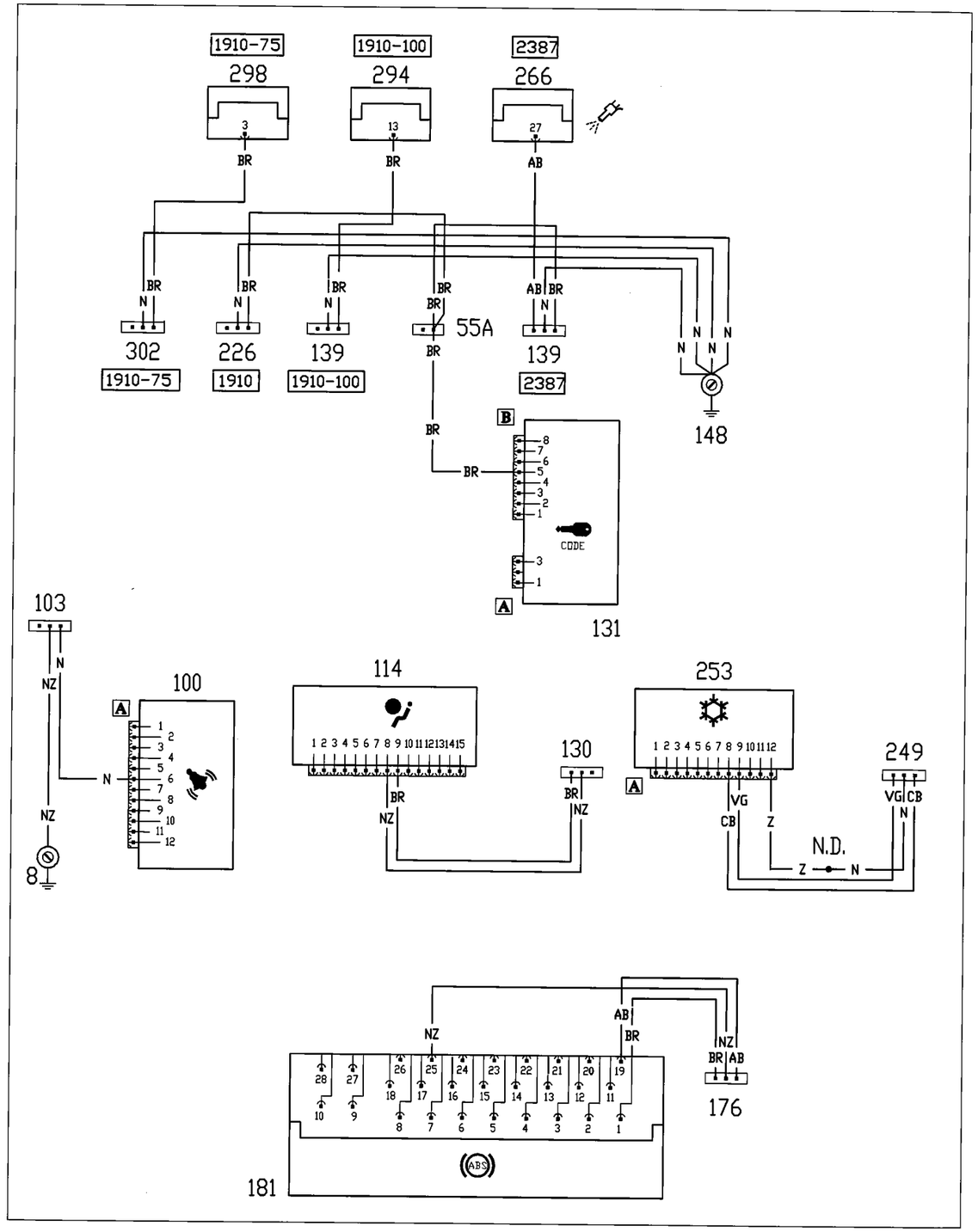

P4F209N01

4F255N

Location of components

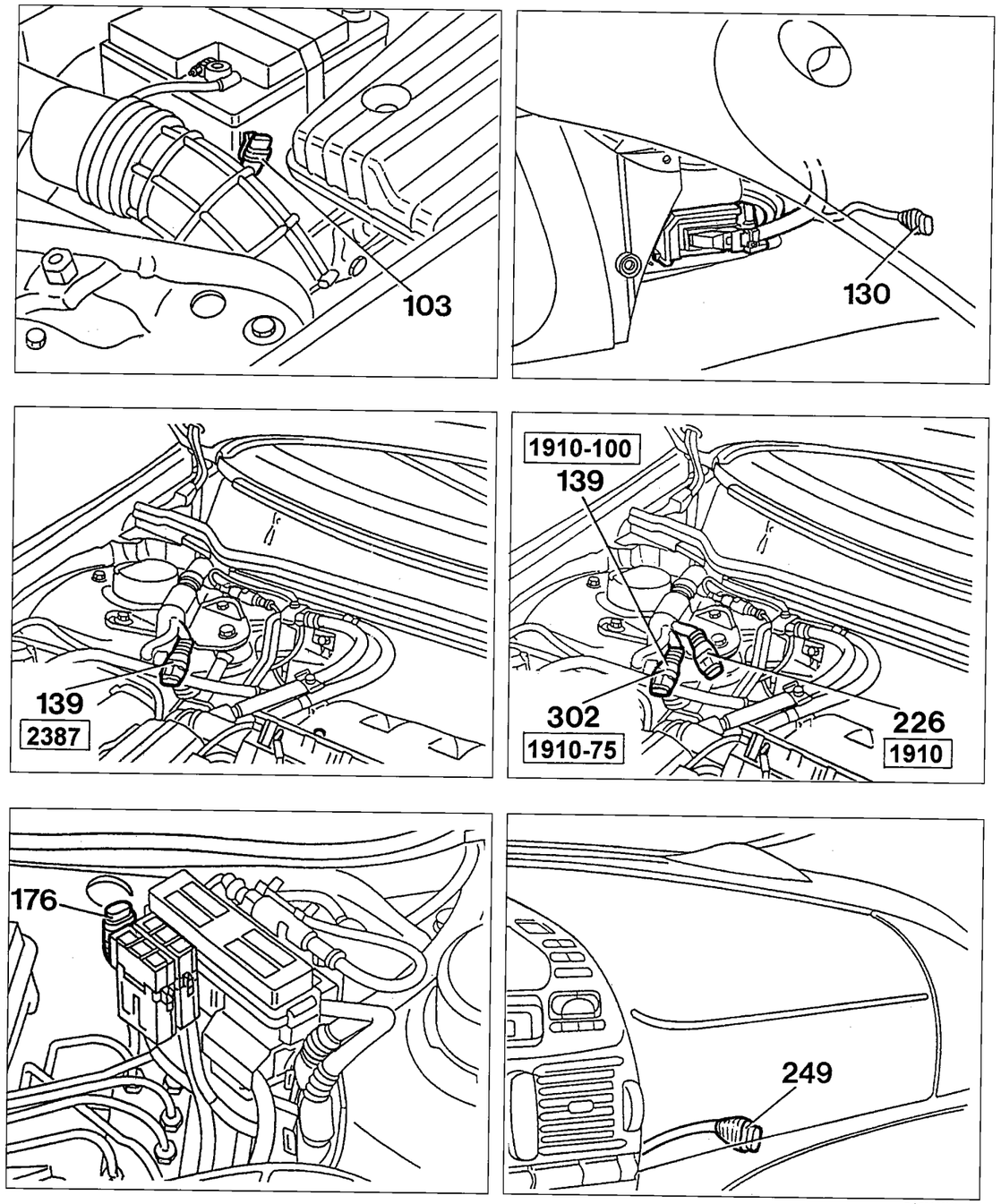

P4F210N01

4F266N

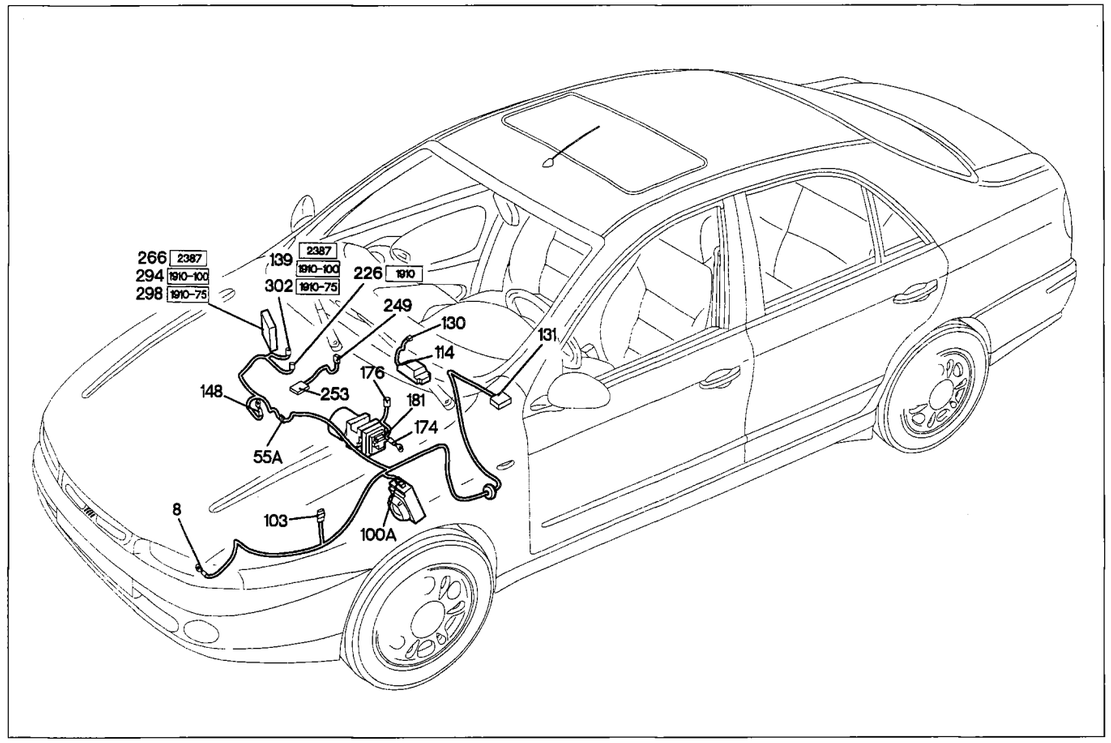

P4F211N01

Diagnostic socket connections (TD engine)

Key to components

8 Front left earth
55A Front/left engine cables connection
100 Alarm electronic control unit

103 Diagnostic socket for alarm
114 Air Bag electronic control unit
130 Air Bag diagnostic socket
131 Fiat CODE electronic control unit
139 Diagnostic socket for injection
148 Earth for electronic fuel injection
176 Diagnostic socket for anti-lock braking system (A.B.S.)
181 Electrohydraulic control unit for anti-lock braking system (A.B.S)
226 Diagnostic socket for Fiat CODE system (1910TD)
249 Diagnostic socket for climate control system
253 Climiate control system control unit
266 Electronic fuel injection control unit (2387)

294 Electronic fuel injection control unit (1910TD-100)
298 E.G.R. electronic control unit (1910TD-75)
302 Diagnostic socket for E.G.R. system (1910T-D-75)

N.D. Ultrasound-soldered joint taped in wiring loom

4F257N

103 Diagnostic socket for alarm

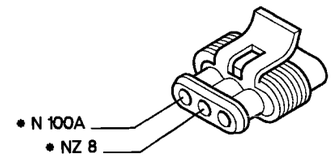

130 Diagnostic socket for Air Bag

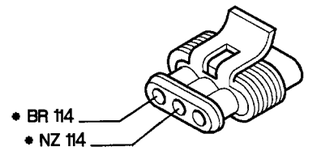

139 Diagnostic socket for injection

1910-100

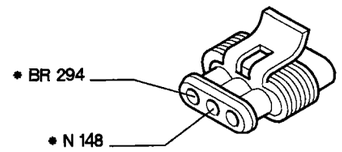

139 Diagnostic socket for injection

2387

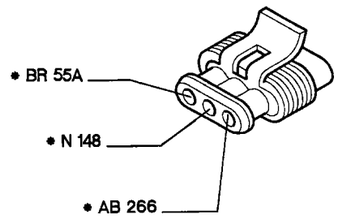

176 Diagnostic socket for anti-lock braking system (A.B.S.)

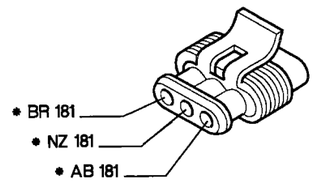

226 Diagnostic socket for FIAT CODE system

1910

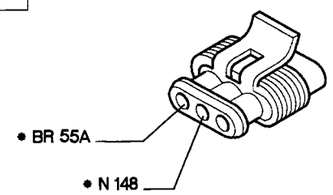

249 Diagnostic socket for climate control system

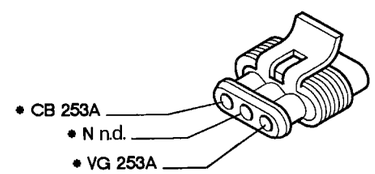

302 Diagnostic socket for E.G.R. system (1910TD-75)

1910-75

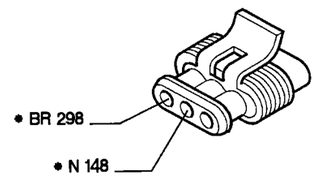

P4F212N01

* The cables involved in the wiring diagram are marked with an asterisk.

4F258N

Version: Foreign markets

Parking lights and warning lamp - Dipped beam headlamps - Main beam headlamps and warning light - Number plate lights - Heated front seats

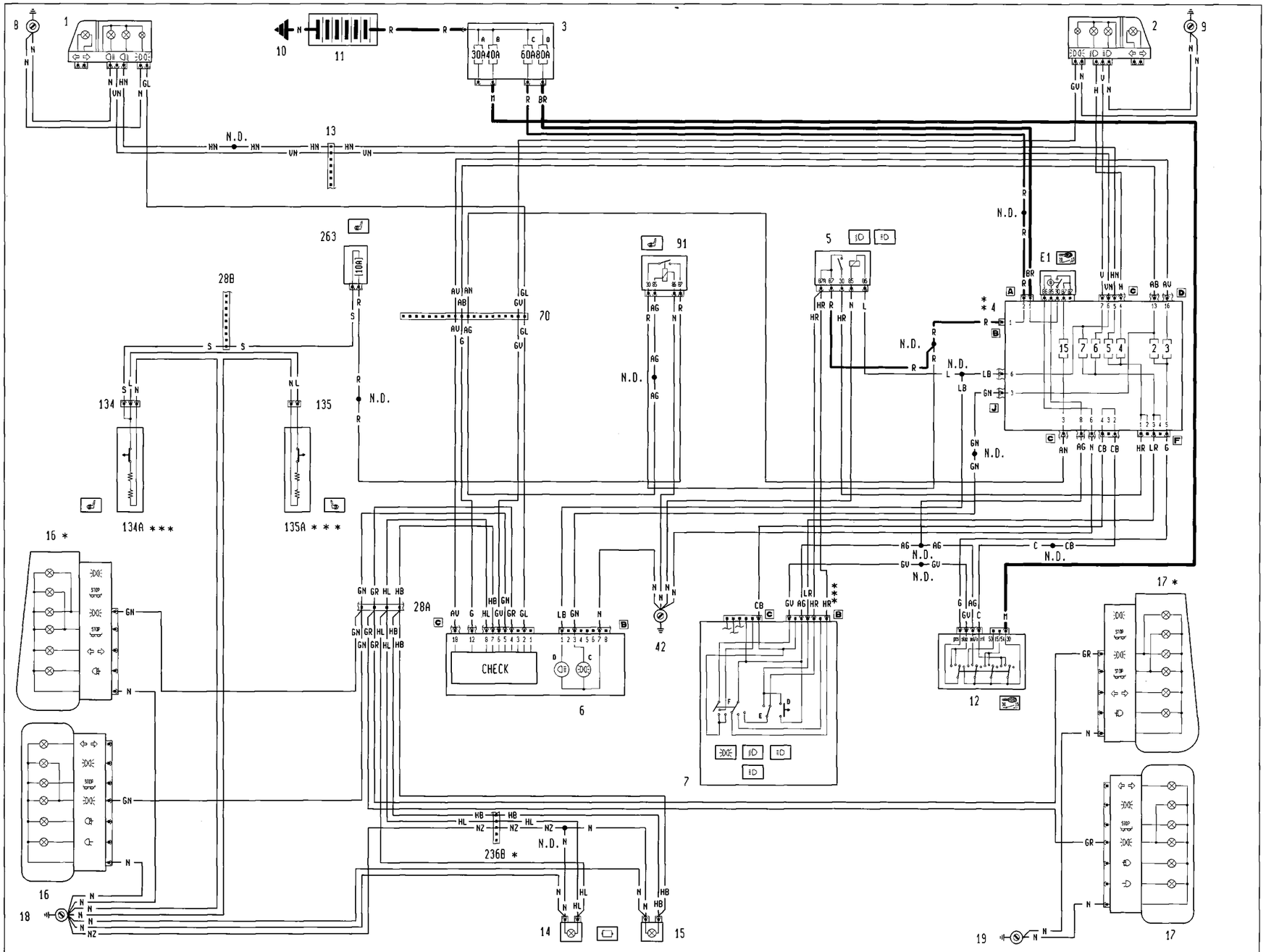

* Existing only for Weekend versions ** Variant only for UK/I versions *** Only on N.E. versions

P4F901N01

3N269N

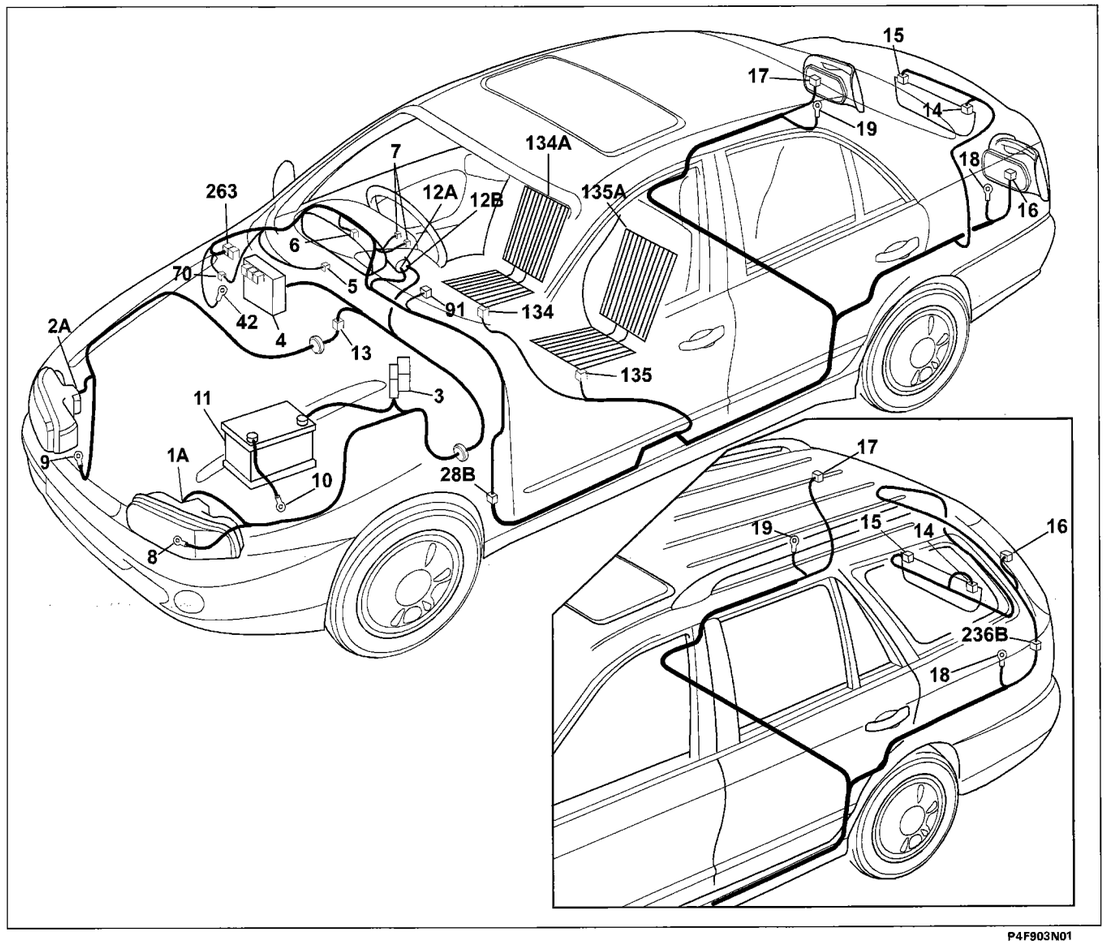

P4F903N01

Parking lights and warning lamp - Dipped beam headlamps - Main beam headlamps and warning light - Number plate lights - Heated front seats

Key to components:

1 Front left lights cluster
2 Front right lights cluster
3 Power fuse box:
  A 30A fuse protecting injection
  B 40A fuse protecting ignition system
  C 60A fuse protecting additional optional extras
  D 80A fuse protecting fuse and relay unit
4 Fuse and relay unit
5 Dipped beam relay
6 Instrument panel:
  C Parking lights warning light
  D Main beam headlamps warning light
7 Stalk unit:
  D Flasher button
  E Dipped beam/main beam headlamps stalk
  F Parking light stalk
8 Front left earth
9 Front right earth
10 Battery earth on body shell
11 Battery
12 Ignition switch
13 Front right/left cables connection
14 Left number plate light bulb
15 Right number plate light bulb
16 Rear left lights cluster
17 Rear right lights cluster
18 Rear left earth
19 Rear right earth
28 Dashboard/rear cables connection
42 Earth on right dashboard
70 Dashboard/front cables connection
91 Power relay
134 Rear cables/heated driver's seat cables connection
134A Driver's seat heating pad
135 Rear cables/heated passenger's seat cables connection

135A Passenger's seat heating pad
236 Rear cable/tailgate connection
263 10A fuse protecting heated seats
N.D. Ultrasound-soldered joint taped in wiring loom

4F260N

28B Dashboard/rear cables connection

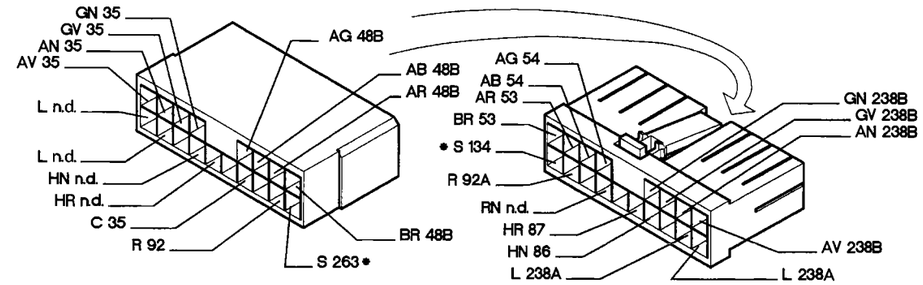

70 Dashboard/front cables connection

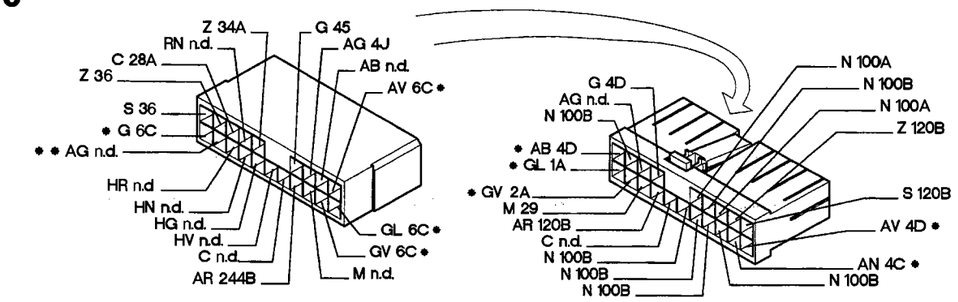

91 Power relay

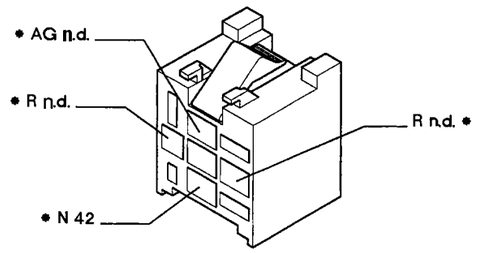

134 Rear cables/driver's heated seat connection

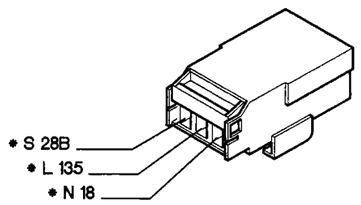

135 Rear cables/passenger's heated seat connection

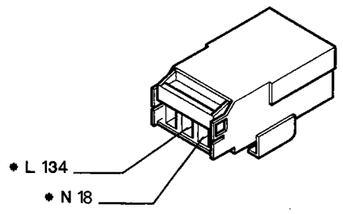

263 10A fuse protecting heated seats

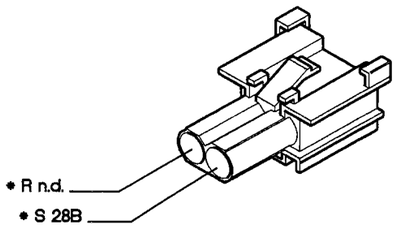

P4F904N01

* The cables shown on the wiring diagram are marked with an asterisk.

4F261N

CONTENTS - CONNECTOR BLOCKS

page

- Interpretation of the codes on the connector blocks 82
- Wiring colour code 82
- Connector blocks 83

4F132N

Copyright Fiat Auto

Interpretation of the codes on the connector blocks

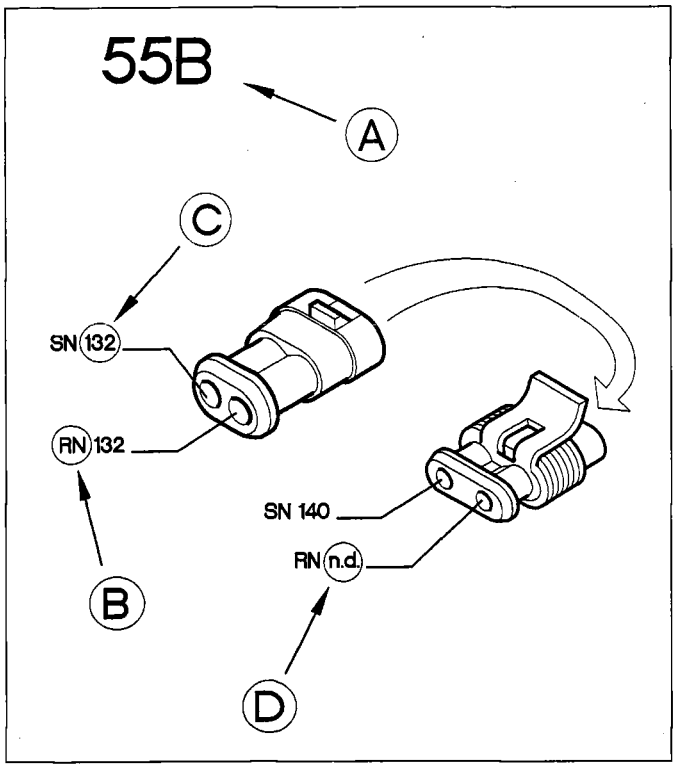

P4F382N01

A Identification no. of connector block referred to the wiring diagrams

B Cable colour identification code (see table at foot of page)

C Identification no. of destination block of cable marked with relevant code

D The code "n.d." identifies a connector block taped into the wiring loom

identification of engine type

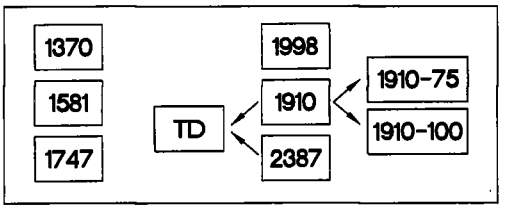

P4F382N05

Identification of climate control type

A manual heater
B automatic heater
C automatic air conditioner

Versions with auto transmission

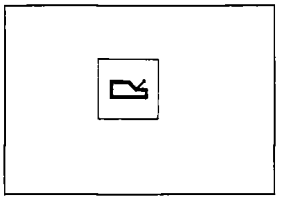

P4F382N04

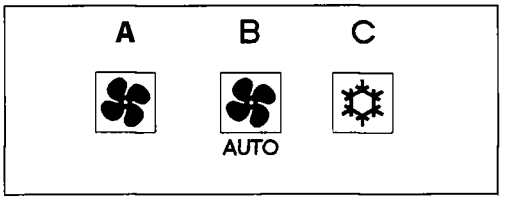

P4F382N03

WARNING All the connector blocks are shown with the cable input side in view.

Cable colour codes

A	Light blue	**BG**	White-Yellow	**LB**	Blue-White
B	White	**BL**	White-Blue	**LG**	Blue-Yellow
C	Orange	**BN**	White-Black	**LN**	Blue-Black
G	Yellow	**BR**	White-Red	**LR**	Blue-Red
H	Grey	**BV**	White-Green	**LV**	Blue-Green
L	Blue	**BZ**	White-Purple	**MB**	Brown-White
M	Brown	**CA**	Orange-Light blue	**MN**	Brown-Black
N	Black	**CB**	Orange-White	**NZ**	Black-Purple
R	Red	**CN**	Orange-Black	**RB**	Red-White
S	Pink	**GN**	Yellow-Black	**RG**	Red-Yellow
V	Green	**GL**	Yellow-Blue	**RN**	Red-Black
Z	Purple	**GR**	Yellow-Red	**RV**	Red-Green
AB	Light blue-White	**GV**	Yellow-Green	**SN**	Pink-Black
AG	Light blue-Yellow	**HG**	Grey-Yellow	**VB**	Green-White
AN	Light blue-Black	**HN**	Grey-Black	**VN**	Green-Black
AR	Light blue-Red	**HR**	Grey-Red	**VR**	Green-Red
AV	Light blue-Green	**HV**	Grey-Green	**ZB**	Purple-White

4F133N

1 Front left lights cluster

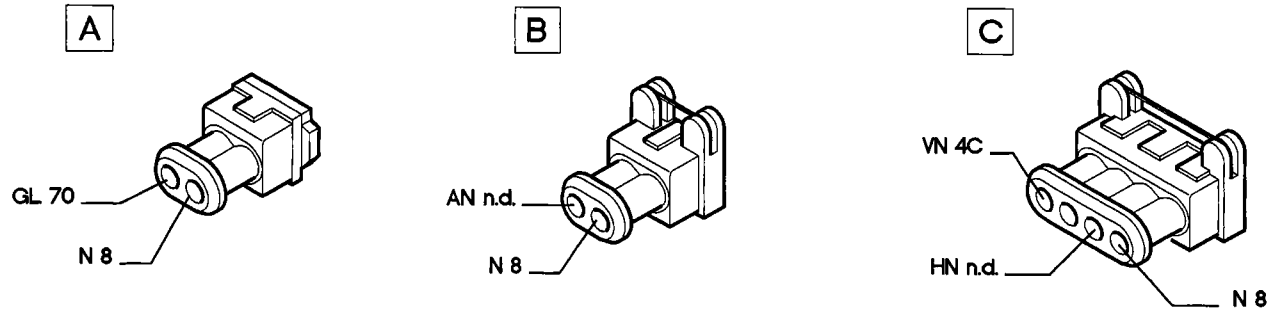

Polyelliptical headlamps

1 Front left lights cluster

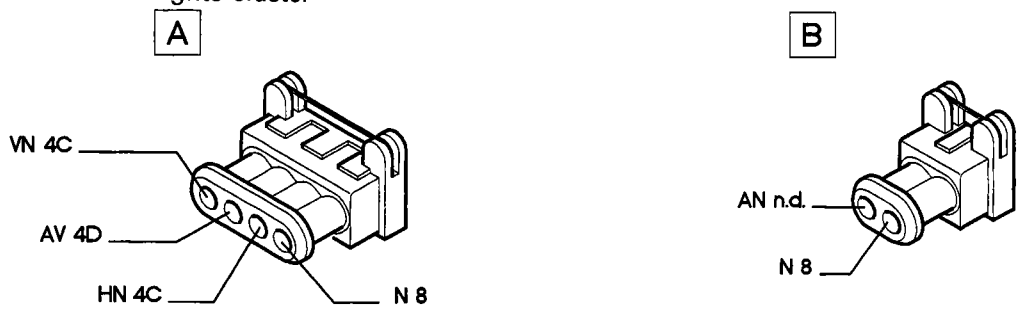

Non-polyelliptical headlamps

2 Front right lights cluster

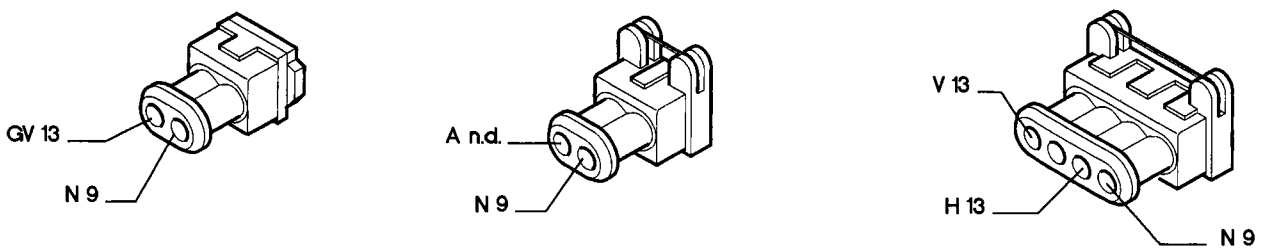

Polyelliptical headlamps

2 Front right lights cluster

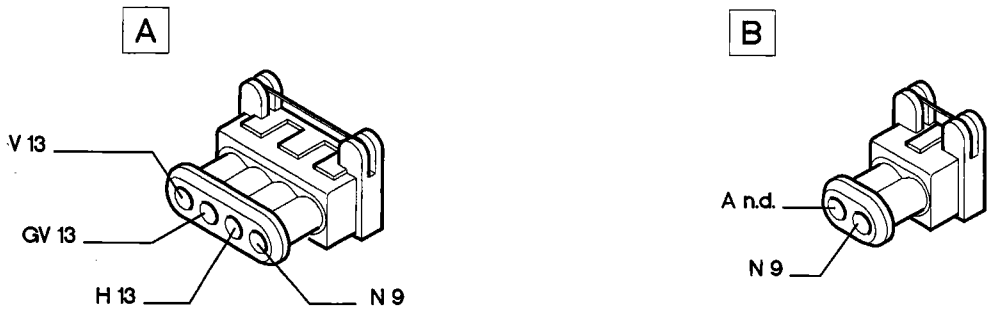

Non-polyelliptical headlamps

4F134N

P4F383N01

Copyright Fiat Auto

55.

3 Power fuse box

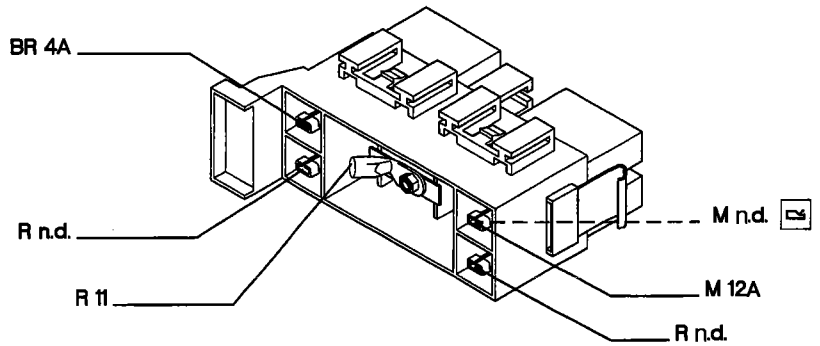

4A Fuse and relay unit

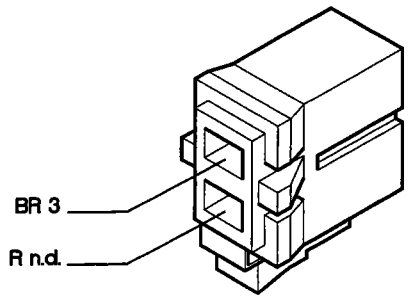

4B Fuse and relay unit

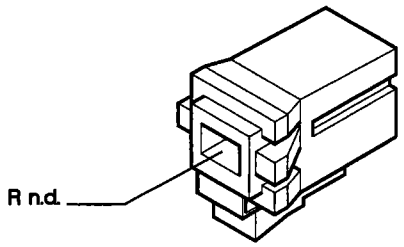

4C Fuse and relay unit

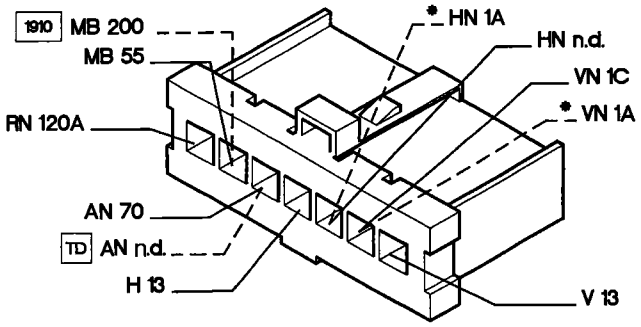

* Without polyellitpical headlamps

4D Fuse and relay unit

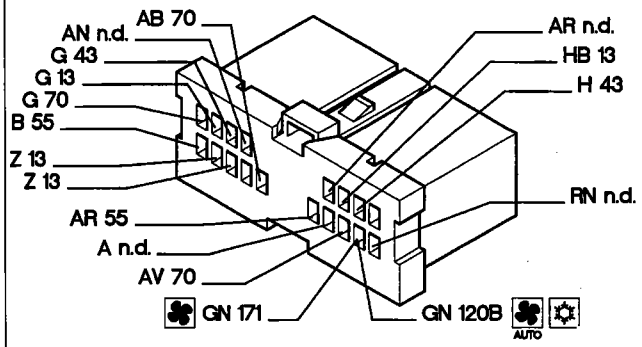

With Check Panel

4D Fuse and relay unit

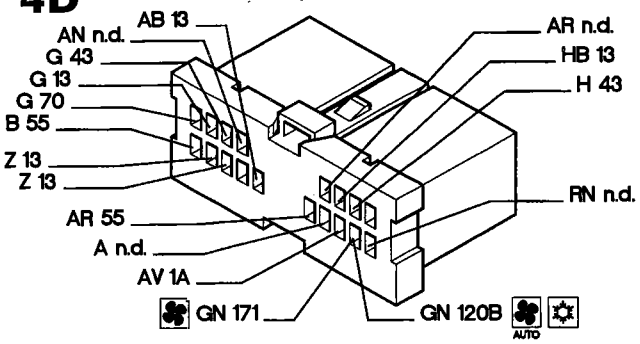

Without Check Panel

4E Fuse and relay unit

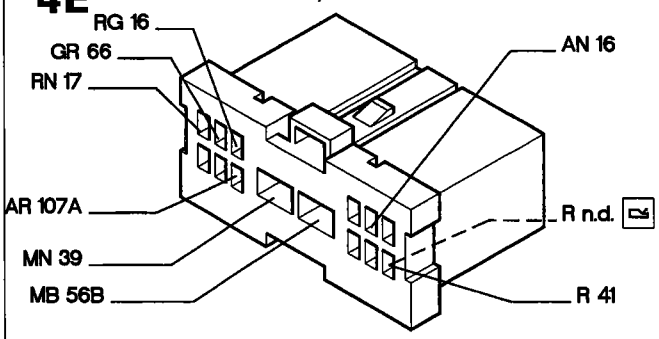

Marea with Check Panel

P4F384N02

4F135N

4E Fuse and relay unit

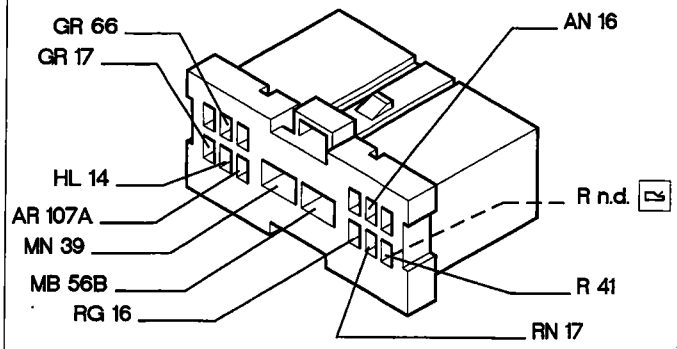

Marea without Check Panel

4E Fuse and relay unit

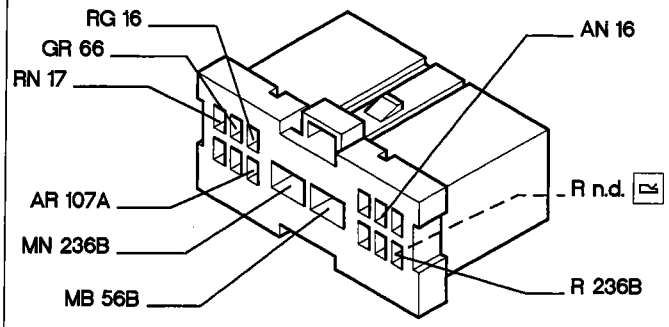

Marea Weekend with Check Panel

4E Fuse and relay unit

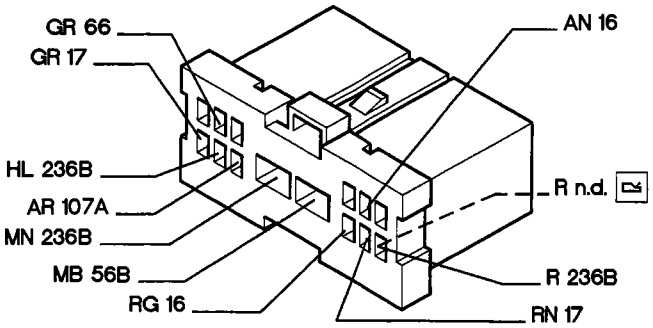

Marea Weekend without Check Panel

4F Fuse and relay unit

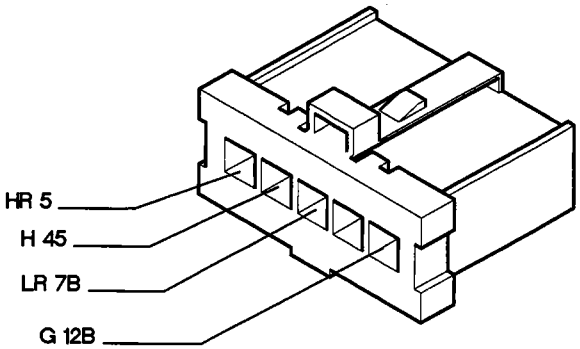

4G Fuse and relay unit

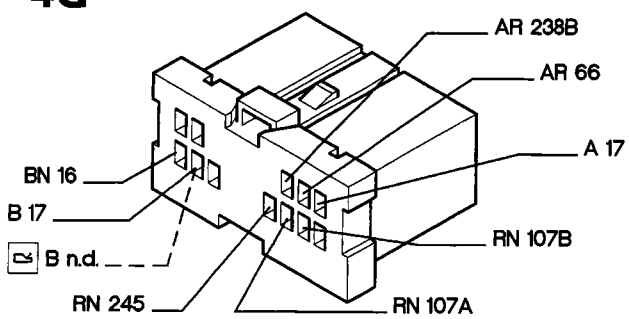

Marea with Check Panel

4G Fuse and relay unit

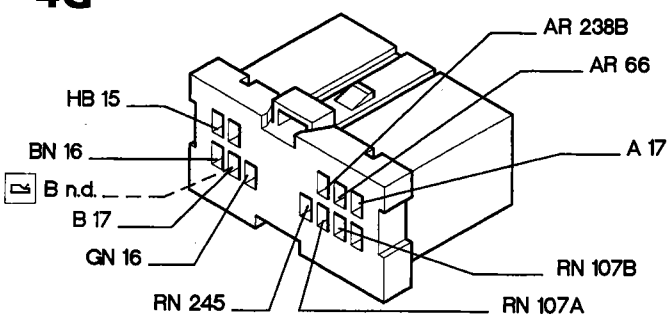

Marea without Check Panel

4G Fuse and relay unit

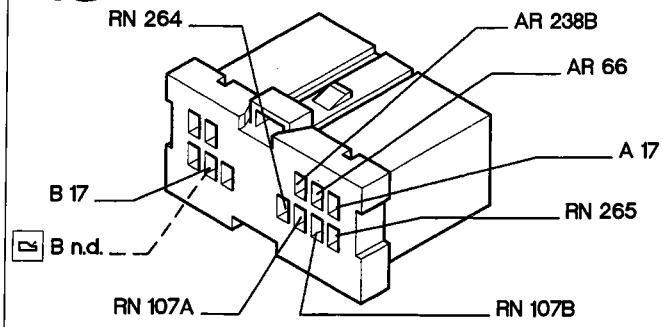

Marea Weekend with Check Panel

4G Fuse and relay unit

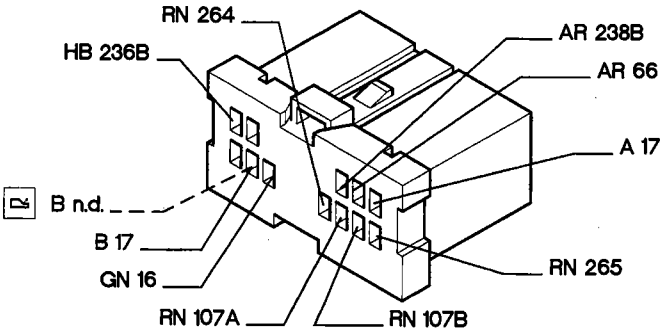

Marea Weekend without Check Panel

P4F385N01

4F136N

Copyright Fiat Auto

55.

4H Fuse and relay unit

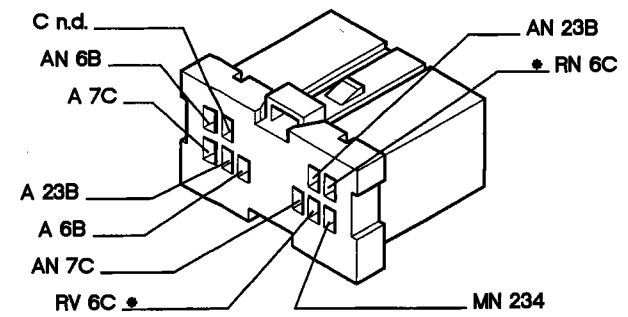

* With Check Panel

4I Fuse and relay unit

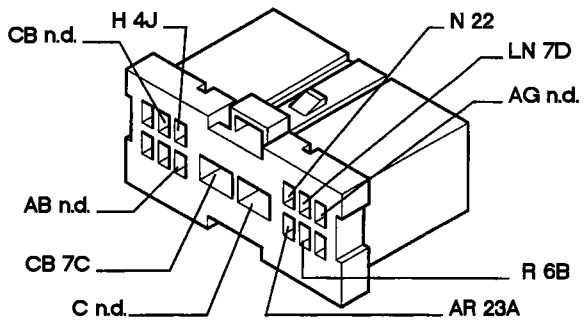

4J Fuse and relay unit

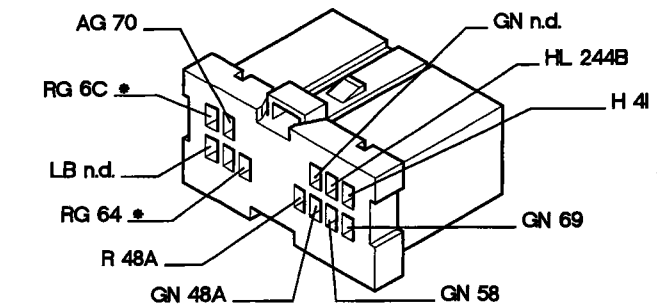

* With Check Panel

5 Dipped beam relay

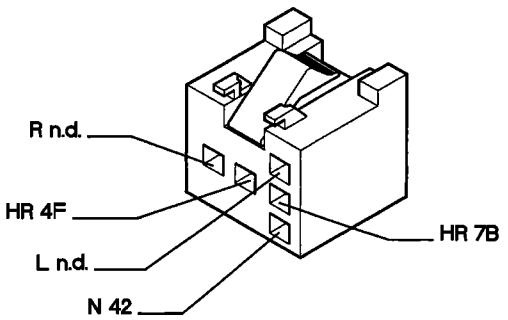

6A Instrument panel

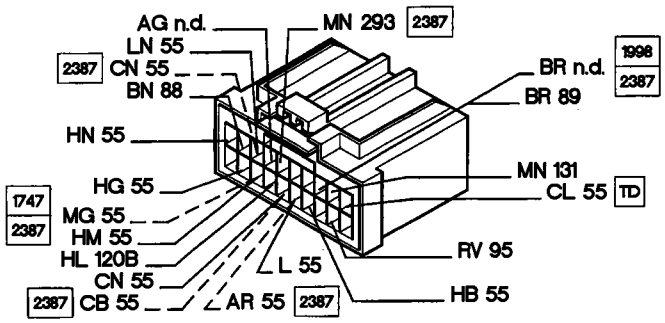

6B Instrument panel

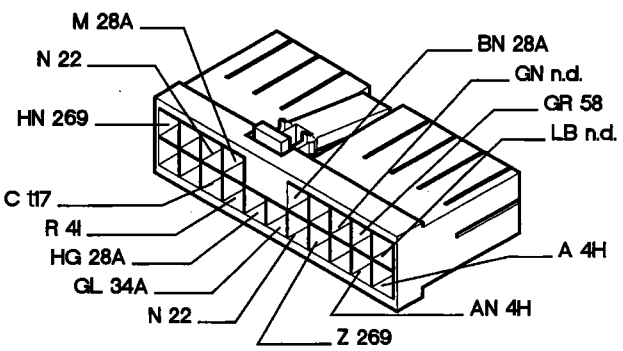

6C Instrument panel

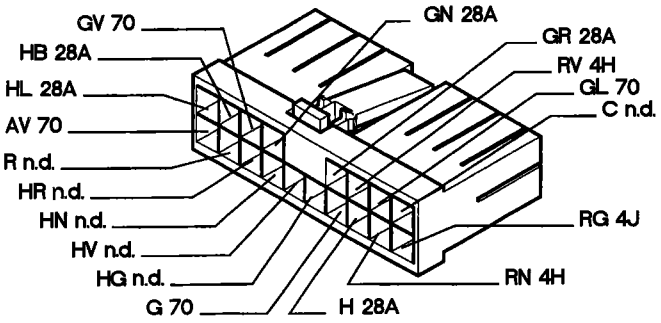

With Check Panel

7A Stalk unit

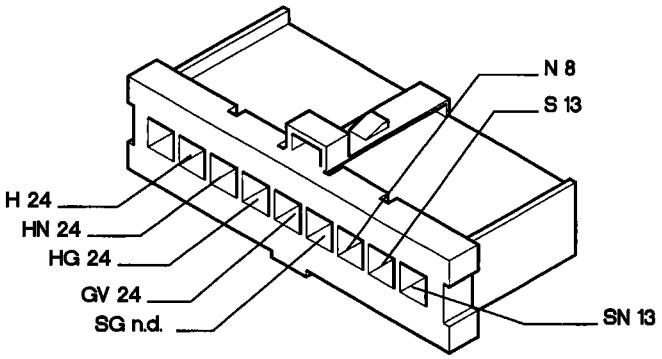

P4F386N02

4F137N

7B Stalk unit

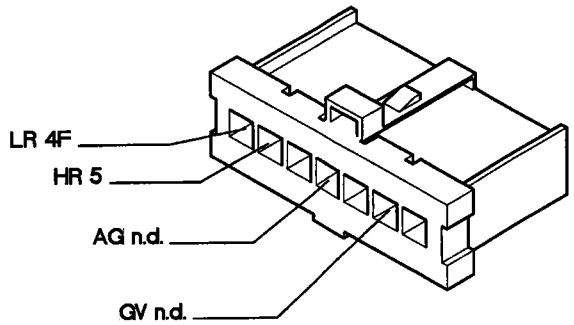

7C Stalk unit

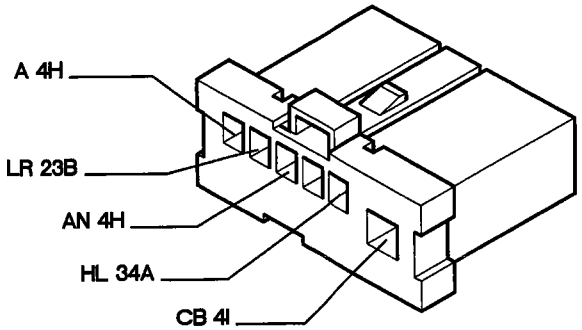

7D Stalk unit

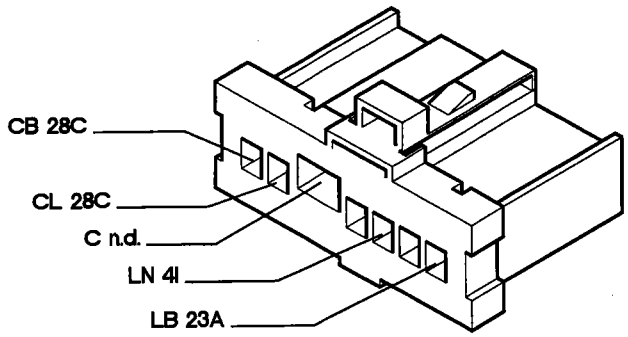

8 Front left earth

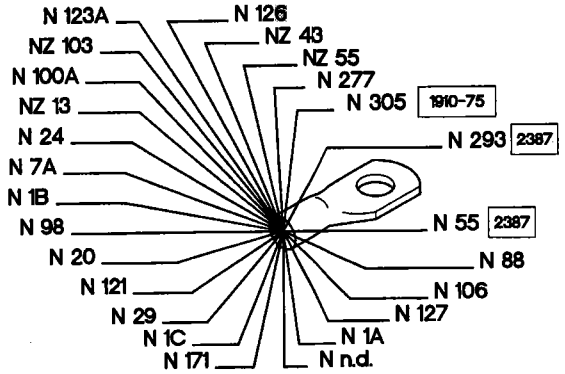

9 Front right earth

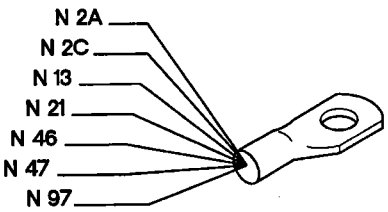

10 Battery earth

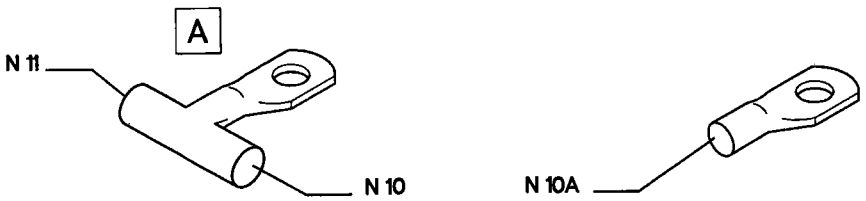

P4F387N02

4F138N

11 Battery

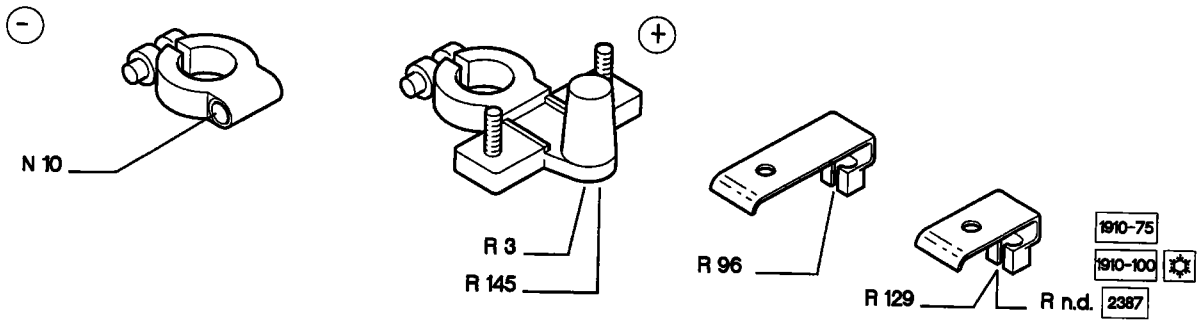

12A Ignition switch

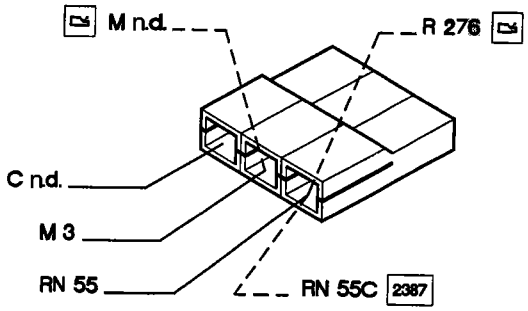

12B Ignition switch

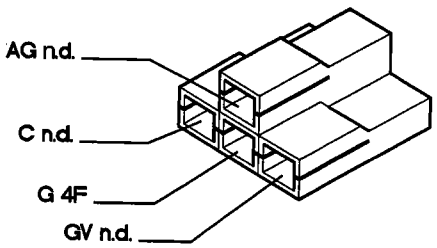

12 Front right/left cables connection

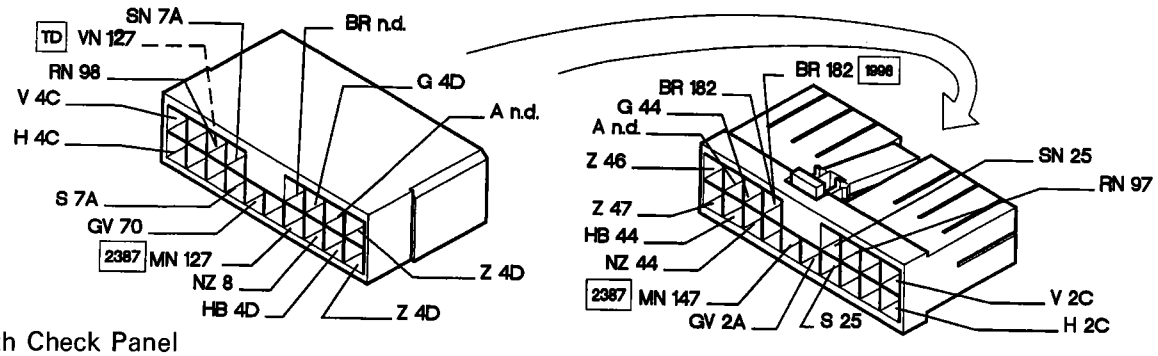

With Check Panel

13 Front right/left cables connection

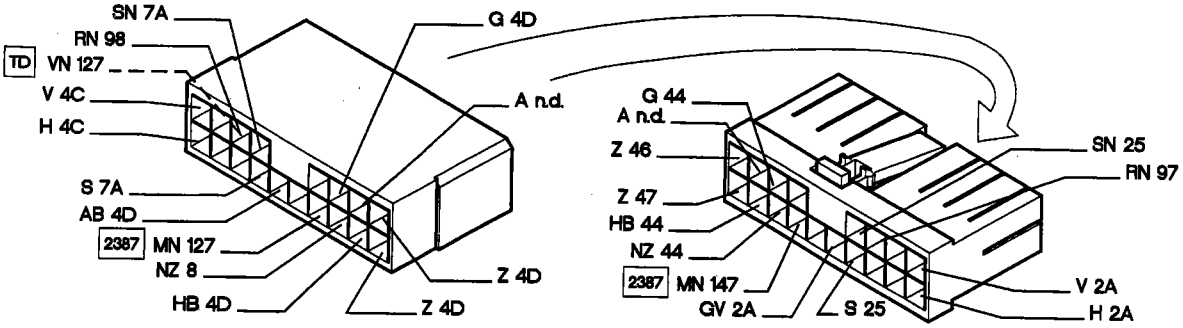

Without Check Panel

4F139N

P4F388N02

14 Left number plate light bulb

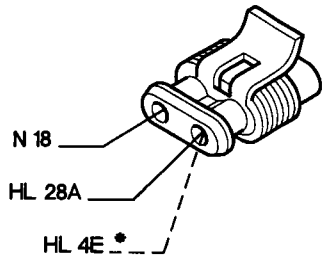

Marea * Without Check Panel

14 Left number plate light bulb

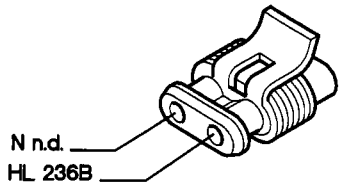

Marea Weekend

16 Right number plate light bulb

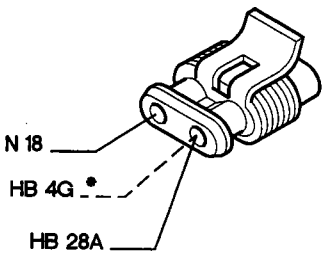

Marea * Without Check Panel

15 Right number plate light bulb

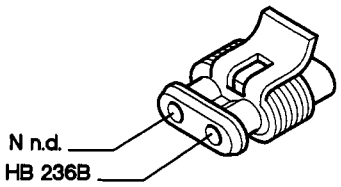

Marea Weekend

16 Rear left lights cluster

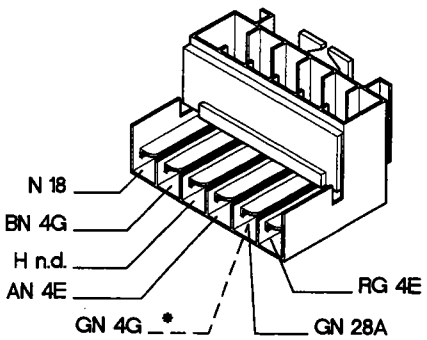

Marea * Without Check Panel

16 Rear left lights cluster

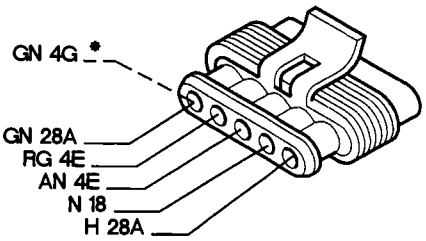

Marea Weekend * Without Check Panel

17 Rear right lights cluster

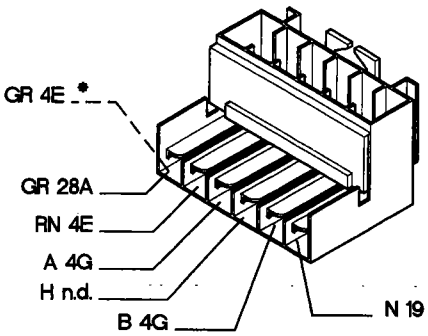

Marea * Without Check Panel

17 Rear right lights cluster

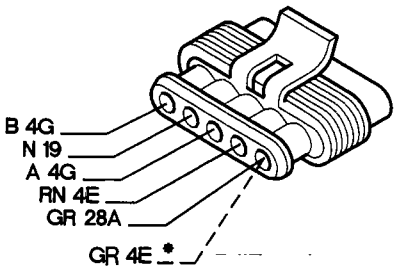

Marea Weekend * Without Check Panel

4F140N

P4F389N01

Copyright Fiat Auto

55.

18 Rear left earth

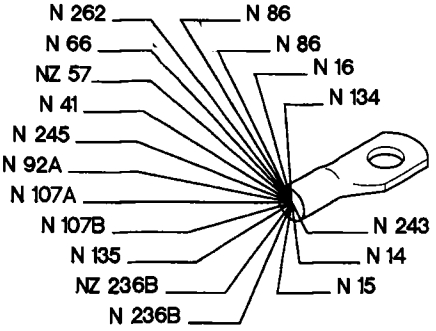

19 Rear right earth

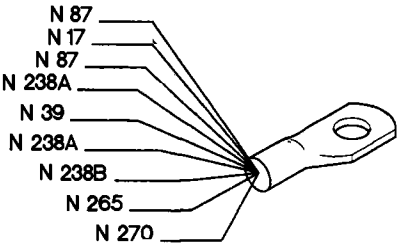

20 Front left side repeater

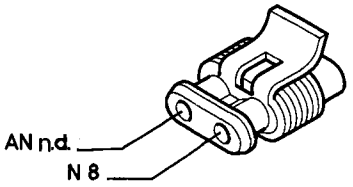

21 Front right side repeater

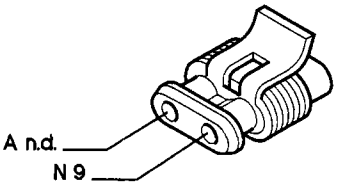

22 Left dashboard earth

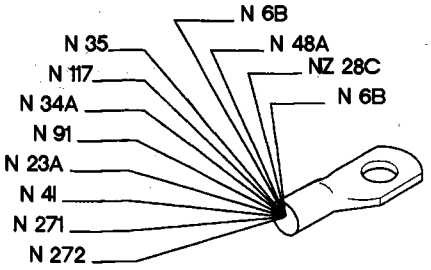

23A Hazard warning lights switch unit

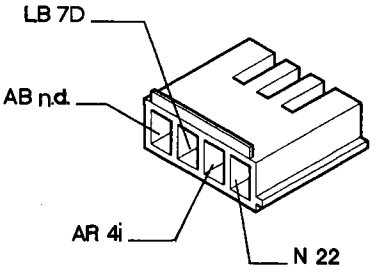

23B Hazard warning lights switch unit

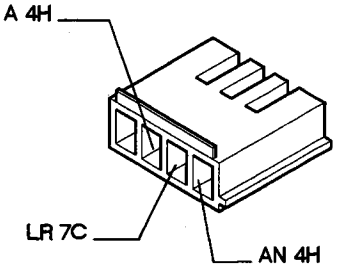

24 Windscreen wiper motor

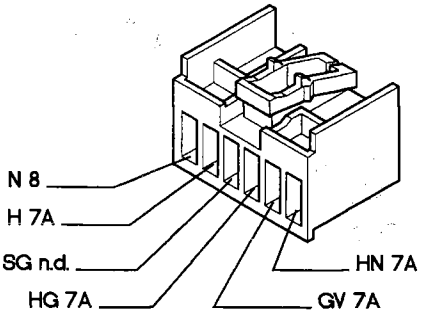

P4F390N01

4F141N

25 Windscreen/rear window washer pump

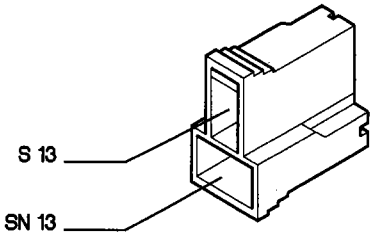

26 Rear window wiper motor

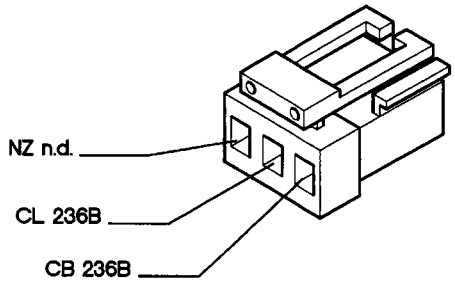

Marea Weekend

28A Dashboard/rear cables connection

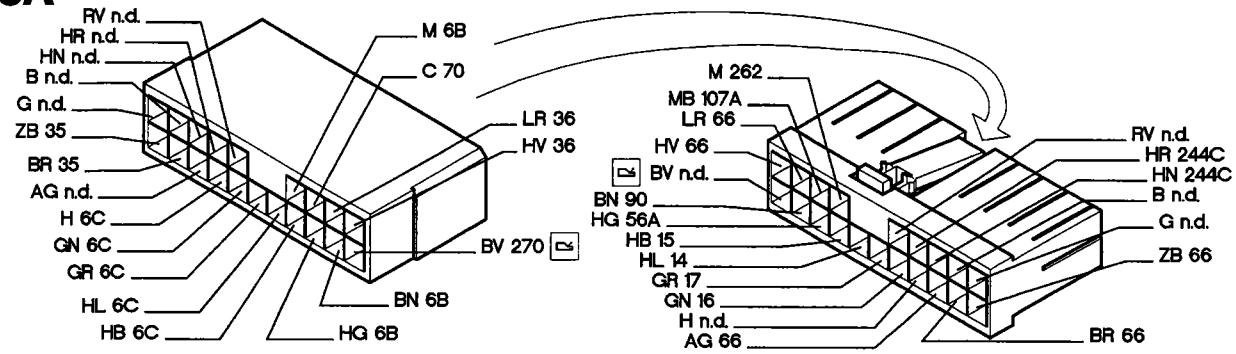

Marea - with Check Panel

28A Dashboard/rear cables connection

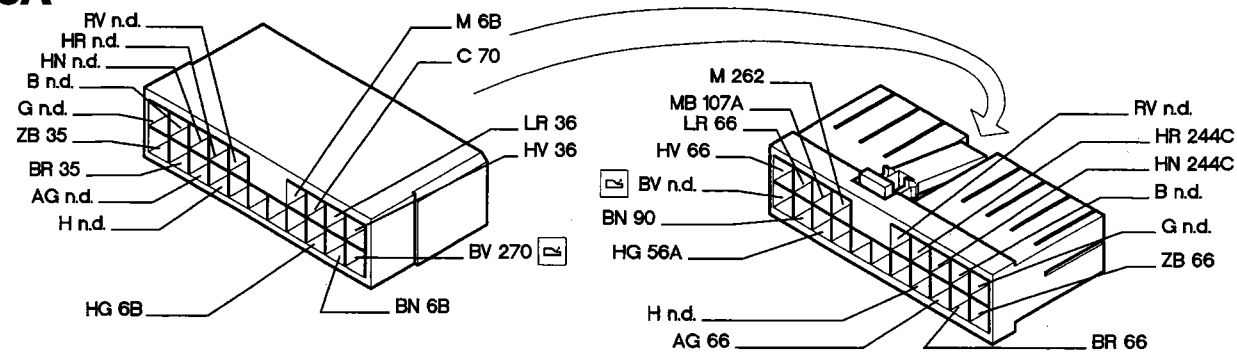

Marea - without Check Panel

28A Dashboard/rear cables connection

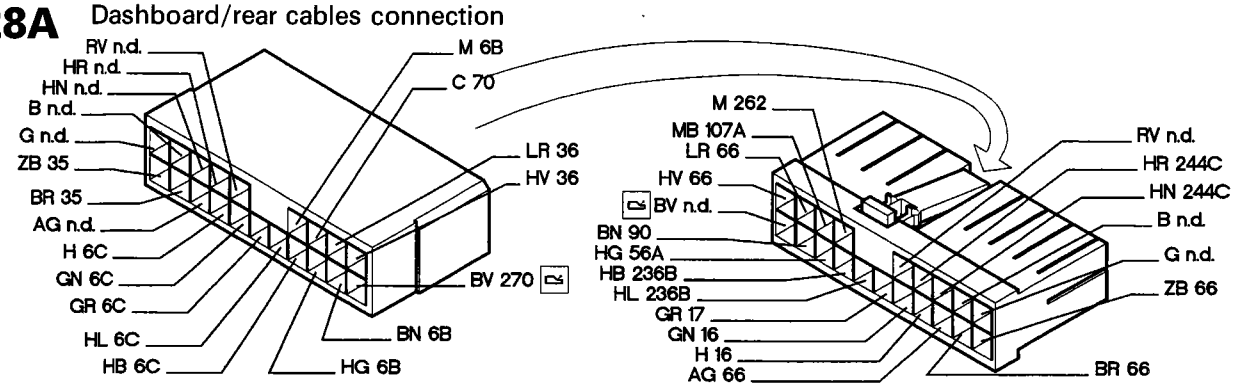

Marea Weekend - with Check Panel

4F142N

P4F391N01

55.

28A Dashboard/rear cables connection

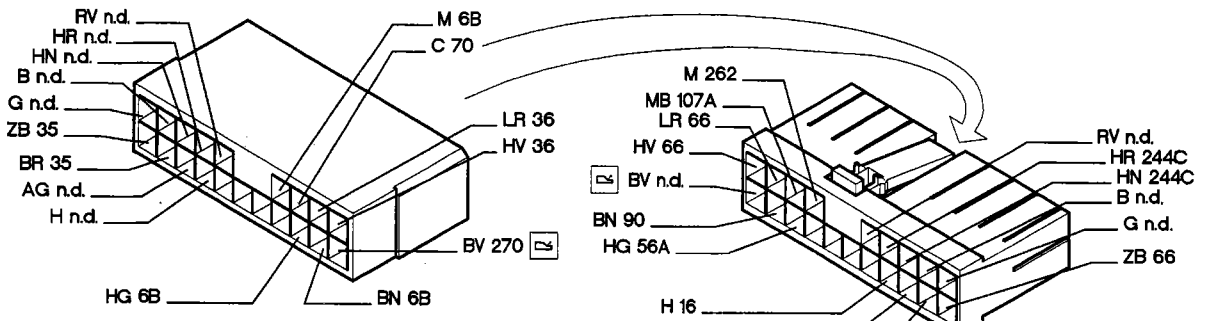

Marea Weekend - without Check Panel

28B Dashboard/rear cables connection

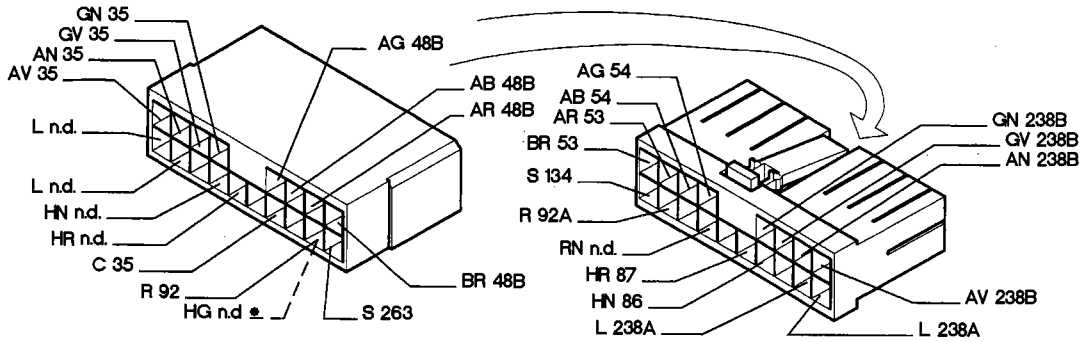

Marea

* Automatic window closure

28B Dashboard/rear cables connection

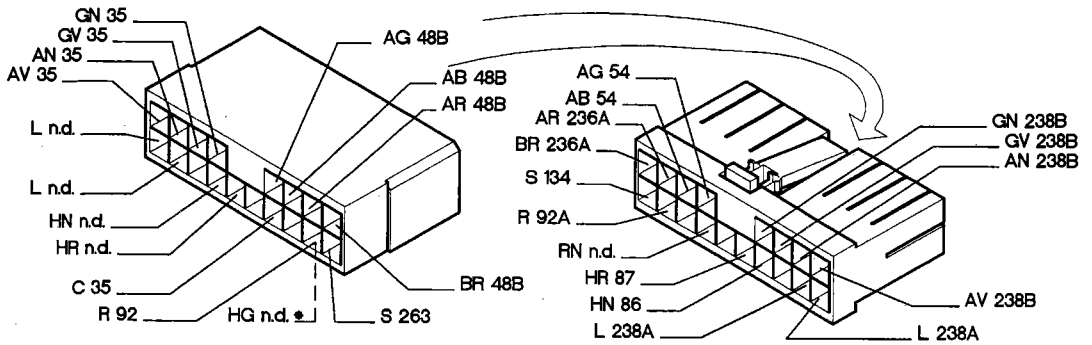

Marea Weekend

* Automatic window closure

28C Dashboard/rear cables connection

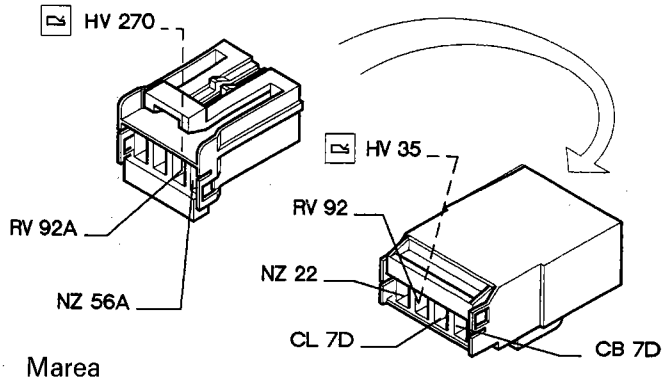

Marea

28C Dashboard/rear cables connection

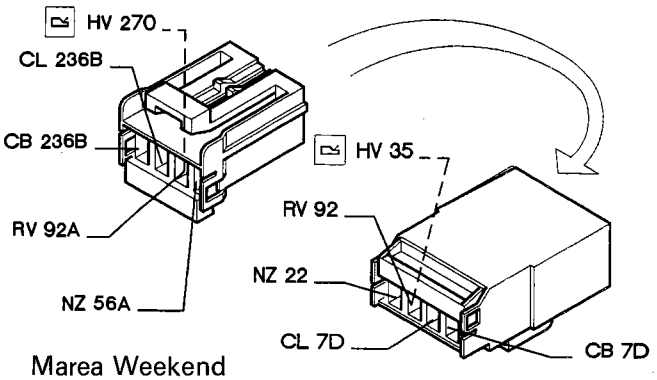

Marea Weekend

4F143N

P4F392N01

29 Front cables/front fog lamps connection

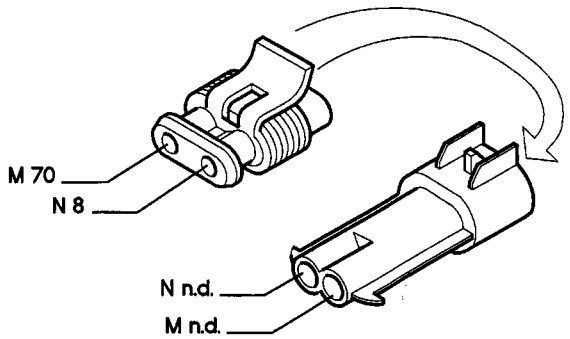

30 Front left fog lamp

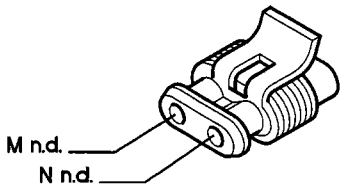

31 Front right fog lamp

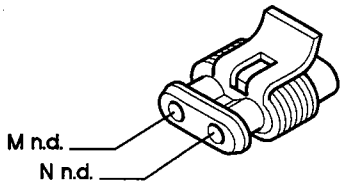

32 Front fog lamp relay

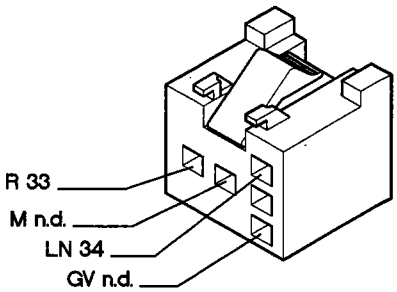

33 Front fog lamps fuse

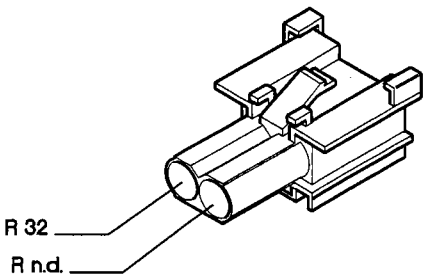

34A Switch control assembly

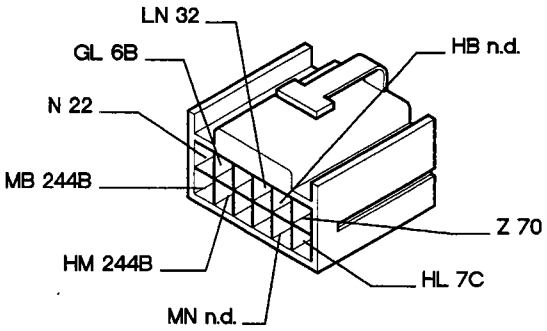

34B Switch control assembly

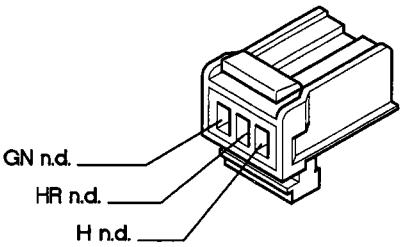

4F144N

P4F393N01

Copyright Fiat Auto

55.

35 Dashboard/front left door cables connection

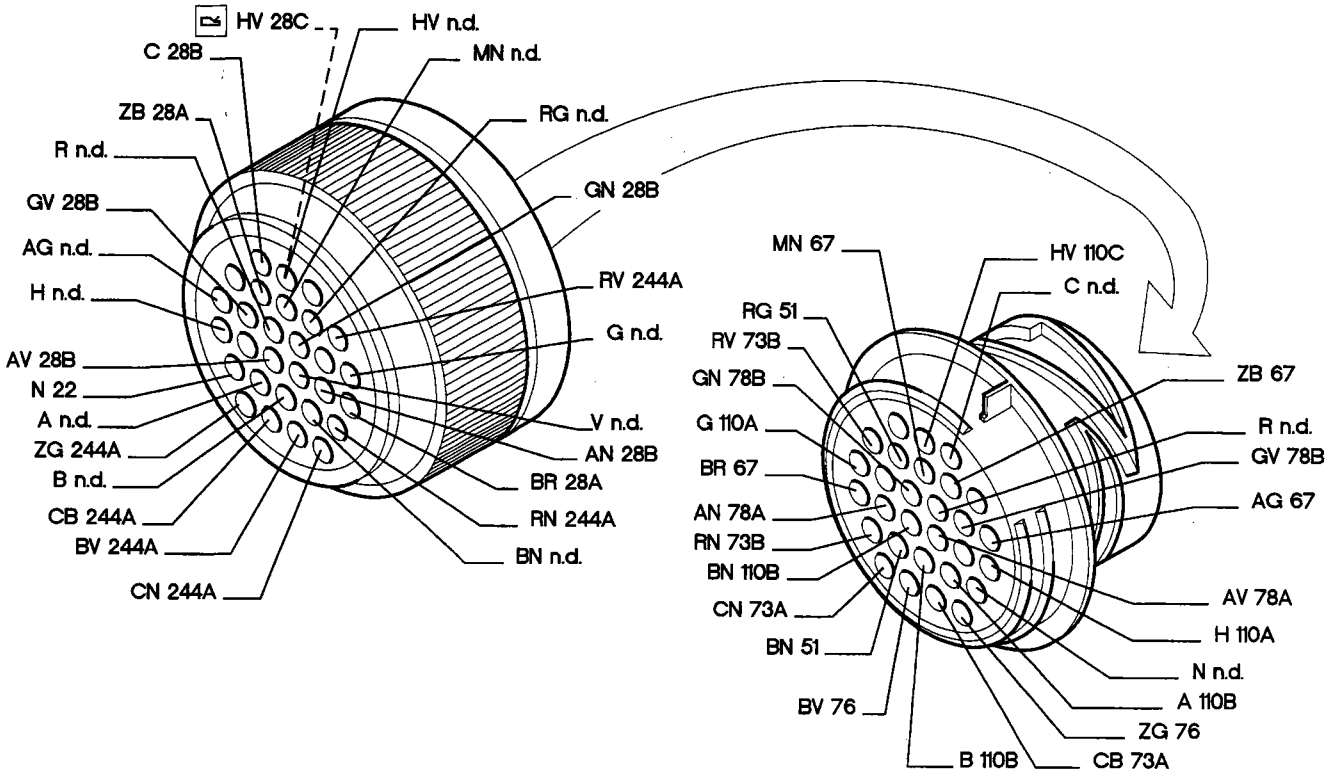

36 Dashboard/front right door cables connection

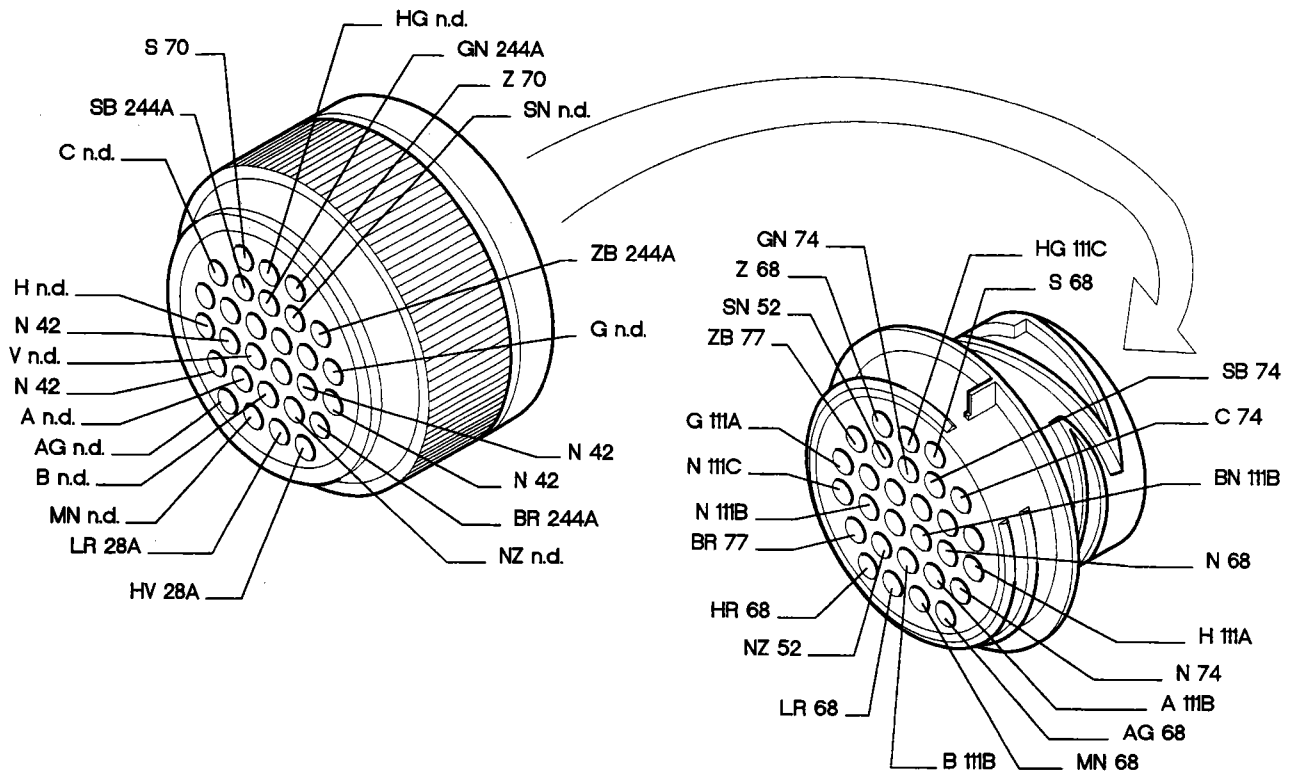

4F145N

P4F394N01

39 Heated rear window

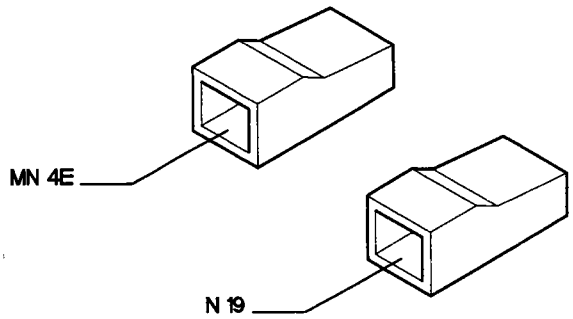

Marea

39 Heated rear window

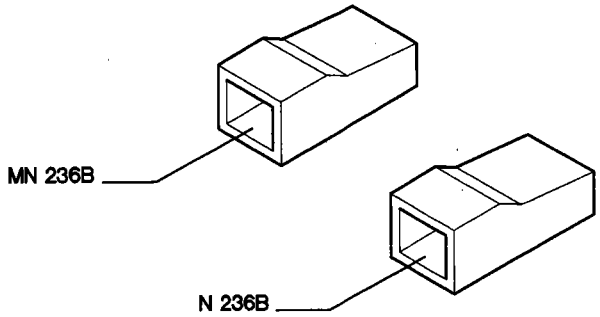

Marea Weekend

40 Stop lights switch

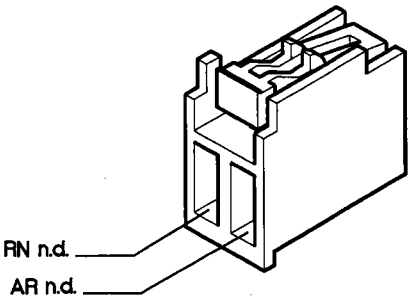

41 Additional stop light

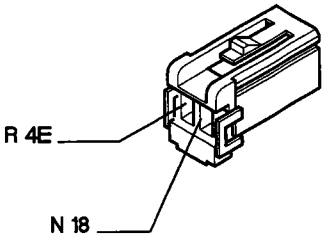

Marea

41 Additional stop light

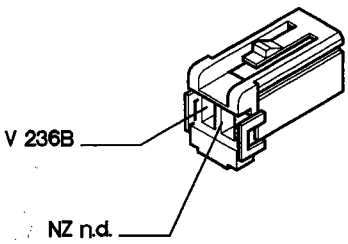

Marea Weekend

42 Right dashboard earth

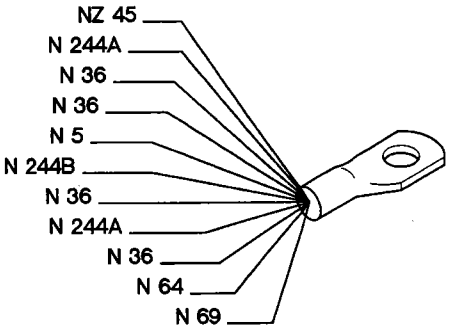

43 Left headlamp adjustment motor

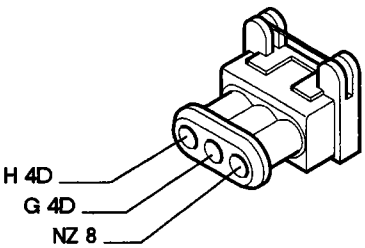

44 Right headlamp adjustment motor

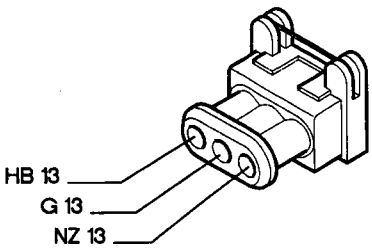

P4F395N01

4F146N

Copyright Fiat Auto

55.

45 Headlamp adjustment unit

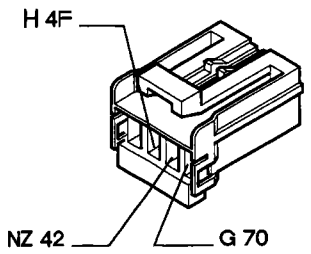

46 Low tone left horn

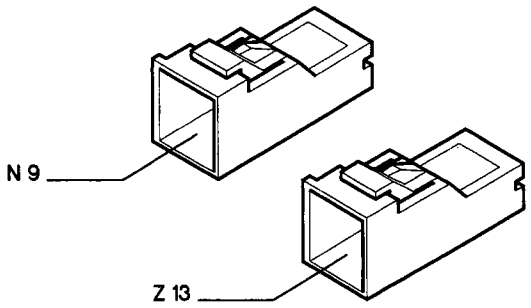

47 High tone right horn

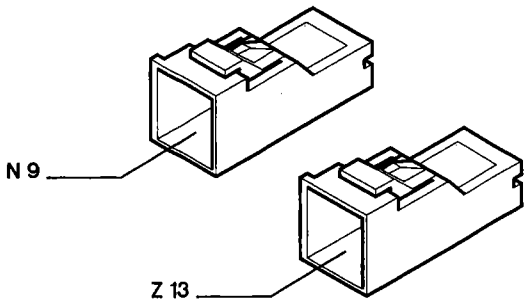

48A Radio with clock

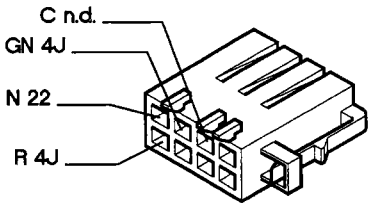

48B Radio with clock

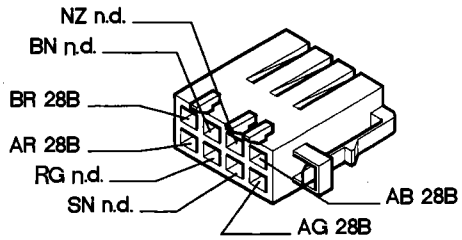

48C Radio with clock

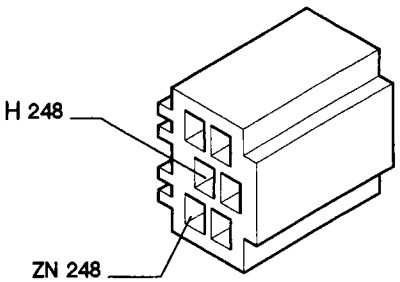

49 Front left loudspeaker (tweeter)

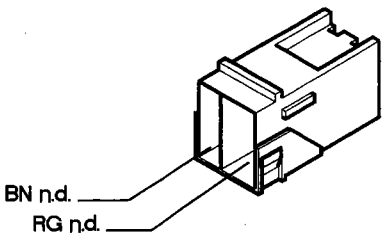

50 Front right speaker (tweeter)

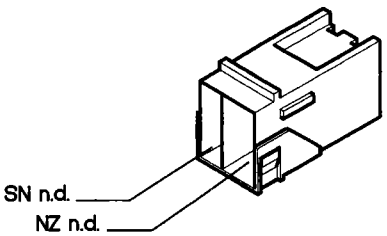

4F147N

P4F396N01

51 Loudspeaker on front left door

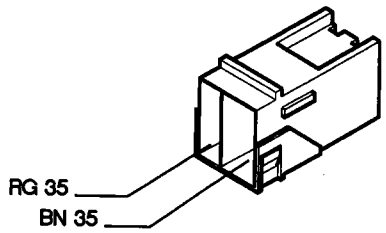

52 Loudspeaker on front right door

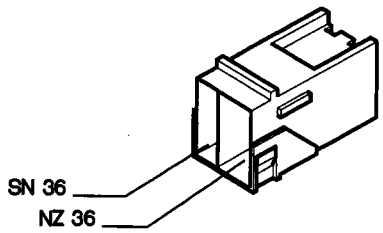

53 Rear left loudspeaker

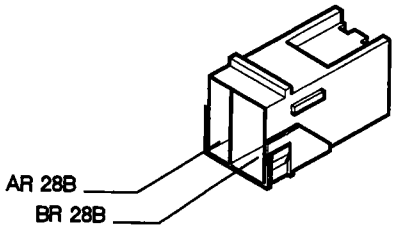

Marea

53 Rear left loudspeaker

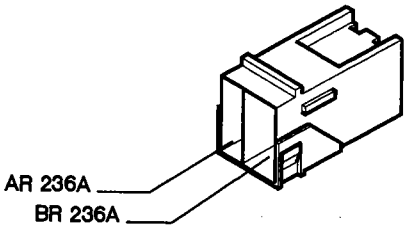

Marea Weekend

54 Rear right loudspeaker

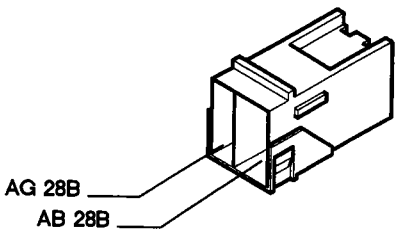

55 Front left/engine cables connection

1370

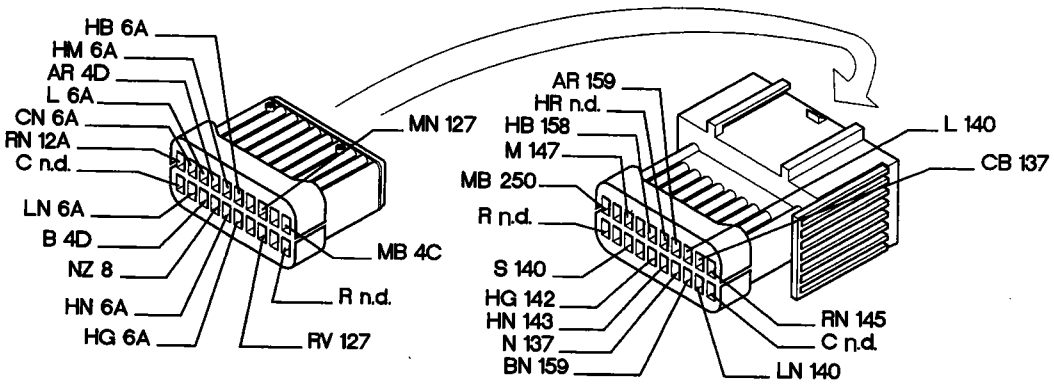

4F148N

P4F397N01

Copyright Fiat Auto

55.

55 Front left/engine cables connection

1581

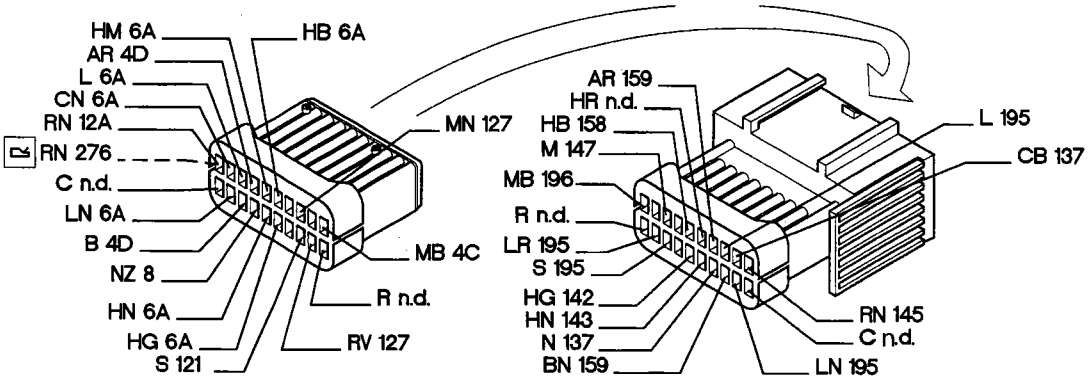

55 Front left/engine cables connection

1747

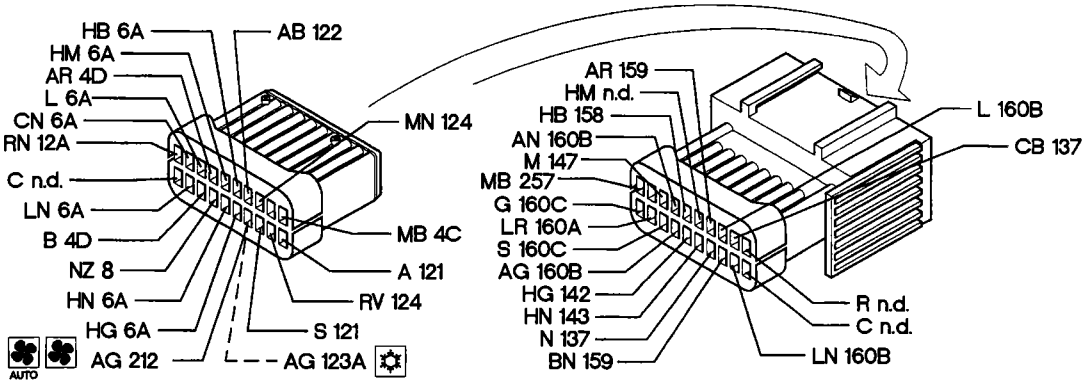

55 Front left/engine cables connection

1998

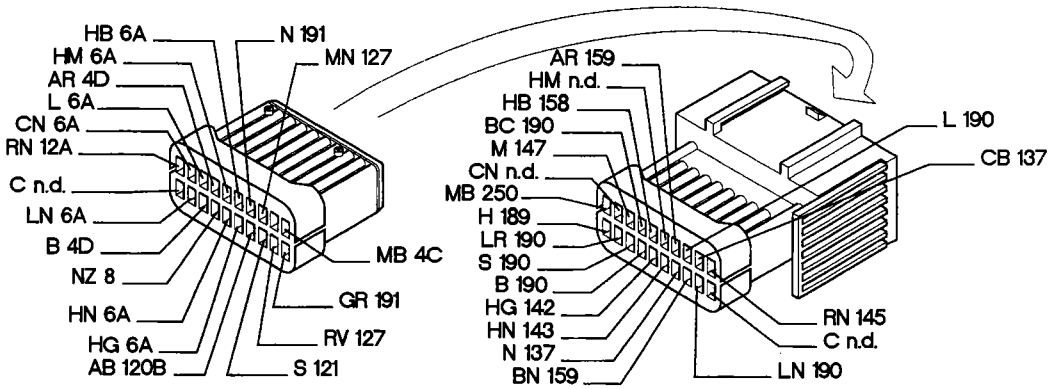

P4F398N01

4F149N

55 Front left/engine cables connection

1910-75

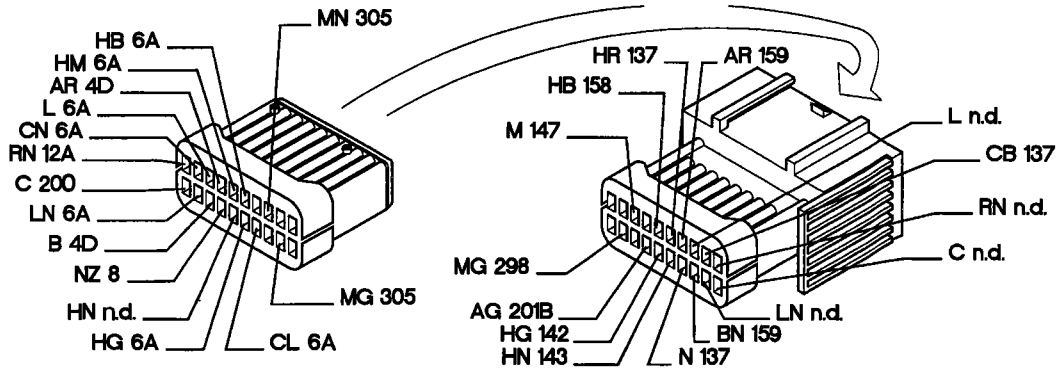

55 Front left/engine cables connection

1910-100

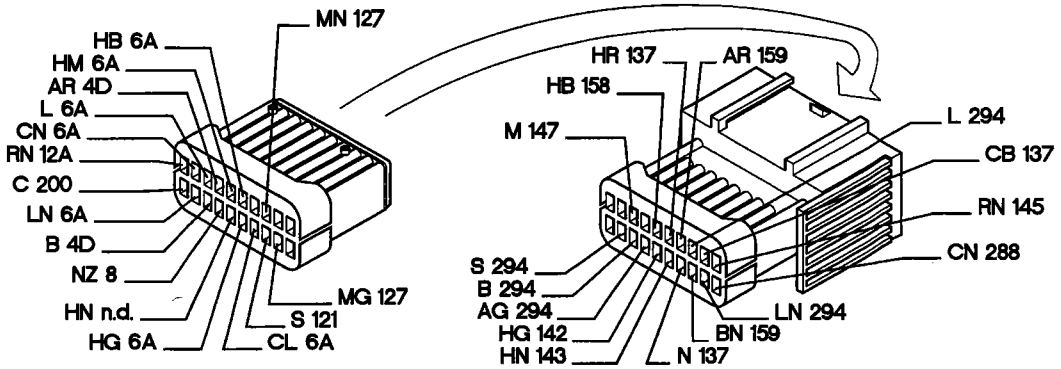

55 Front left/engine cables connection

2387

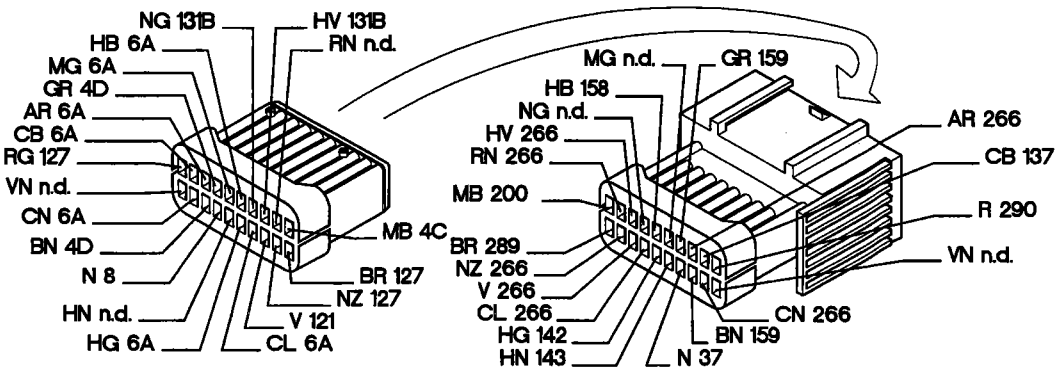

P4F445N01

4F200N

55.

55A Front left/engine cables connection

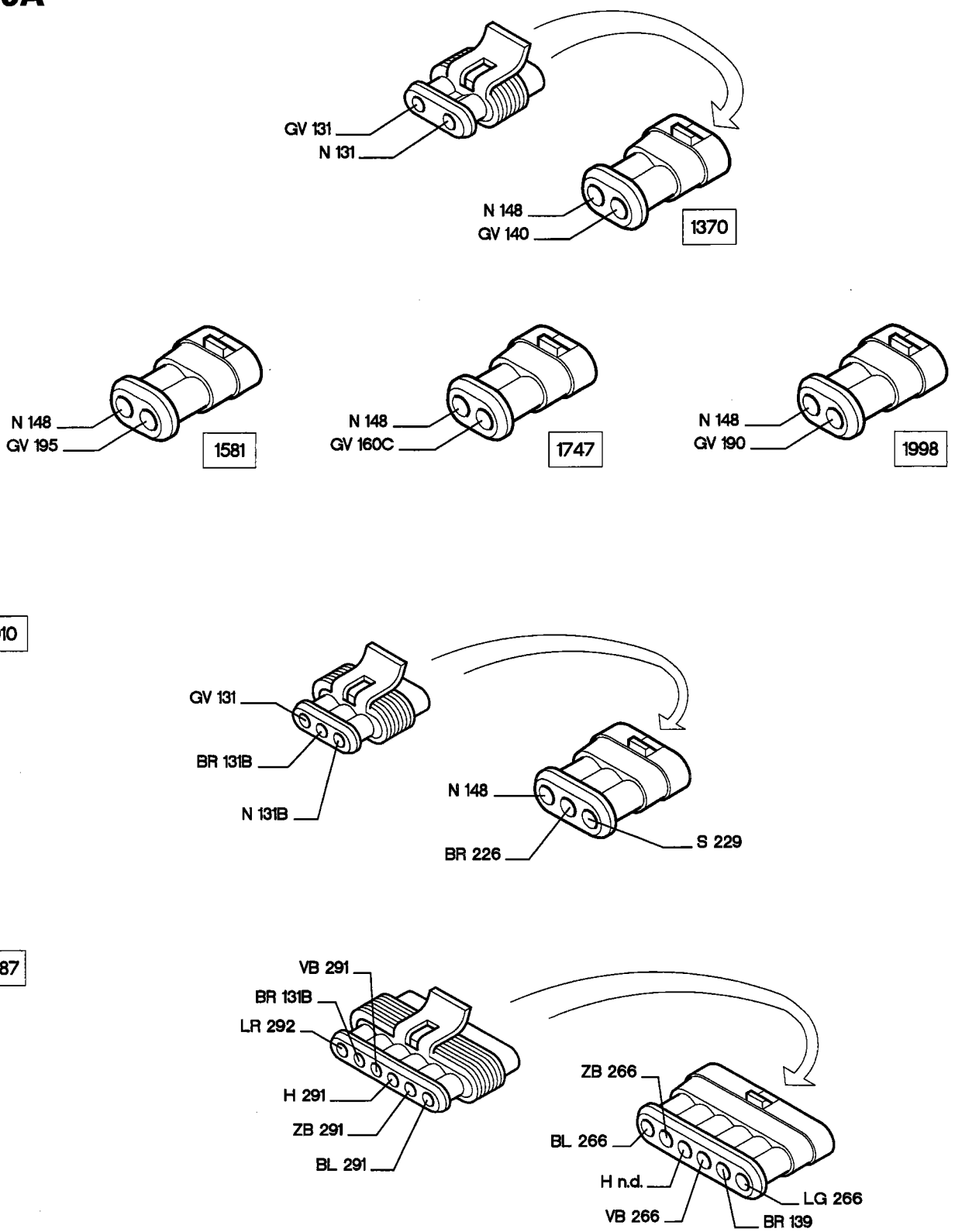

P4F446N01

4F201N

55B Front right/engine cables connection

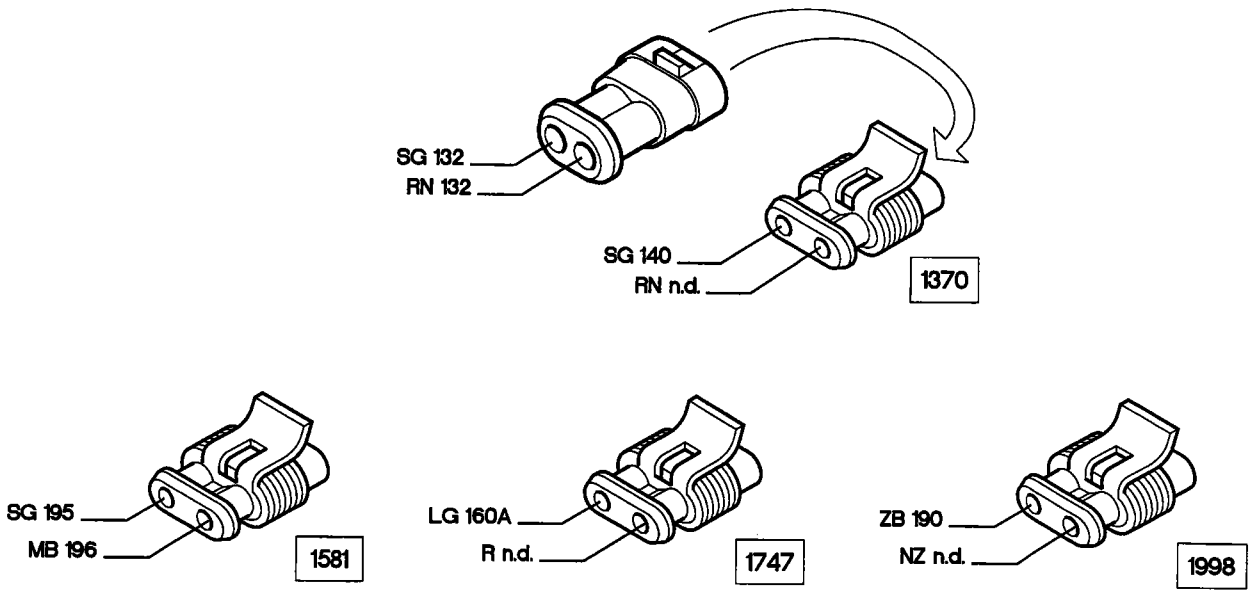

55C Front left/engine cables connection

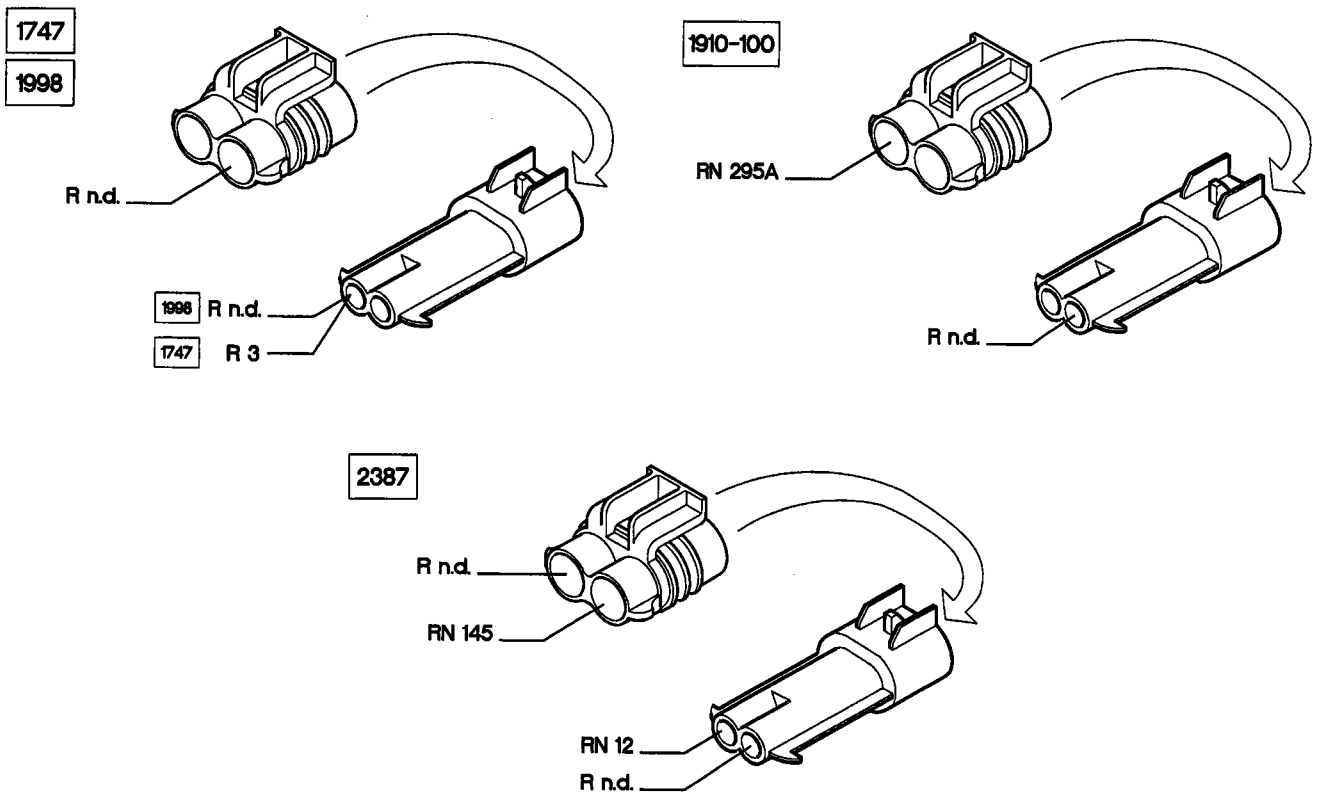

44160N

P4F399N02

55.

56A Fuel gauge sender unit

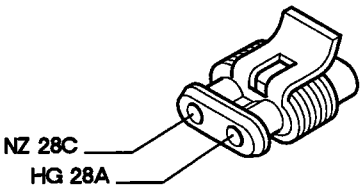

56B Fuel gauge sender unit

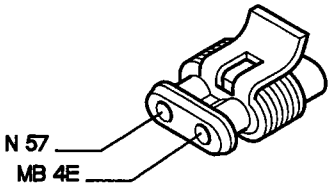

57 Inertial switch

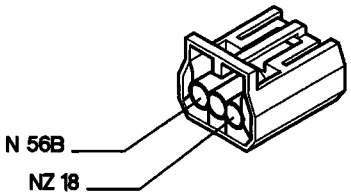

58 Instrument panel lighting brightness adjustment rheostat

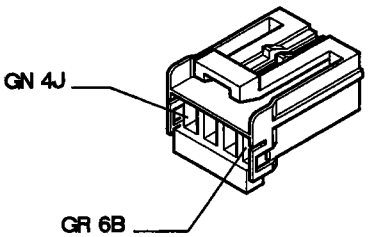

63 Thermostat on radiator

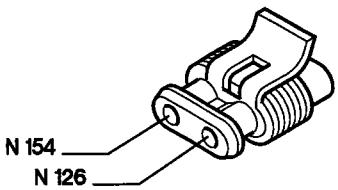

64 Glove compartment light bulb with built-in switch

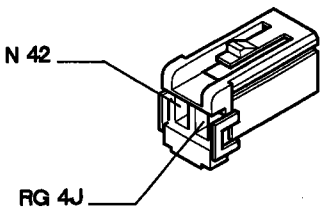

65 Luggage compartment light bulb

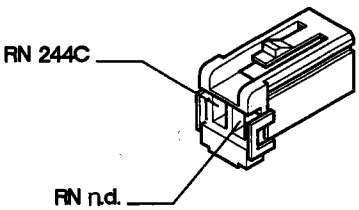

P4F400N02

4F151N

66 Luggage compartment light bulb

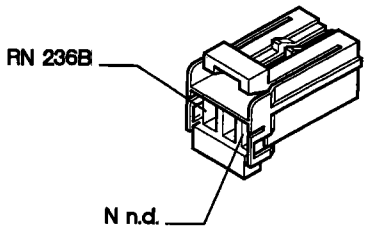

Marea Weekend

66 Pushbutton unit for electrically-adjustable door mirrors

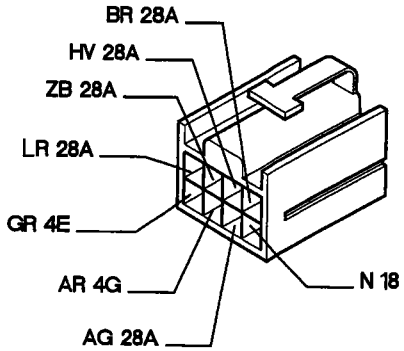

67 Left door mirror

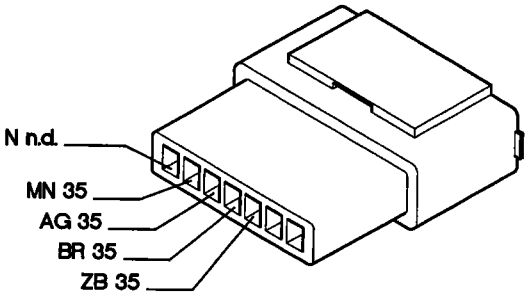

68 Right door mirror

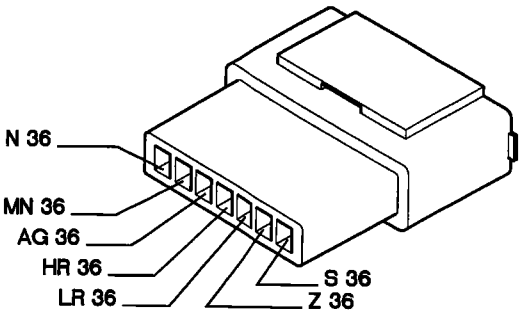

66 Cigarette lighter

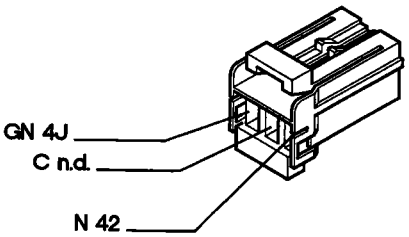

70 Dashboard/front cables connection

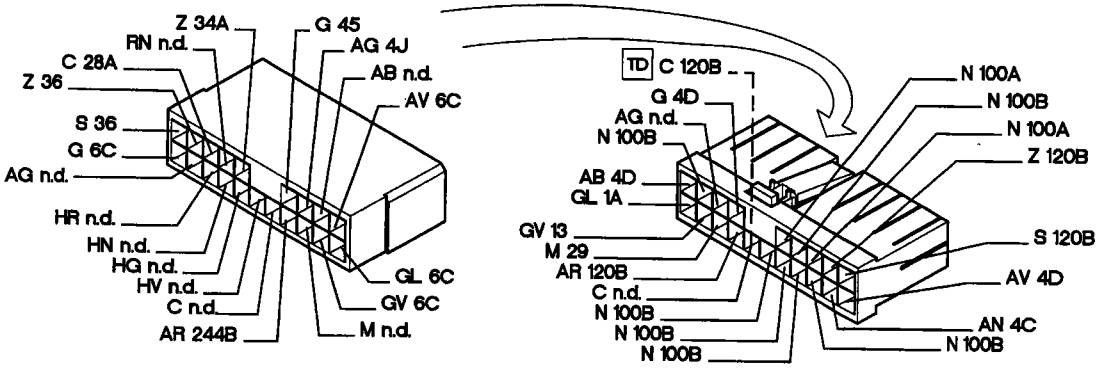

4F152N

P4F401N02

55.

72 Fuse protecting electric front windows

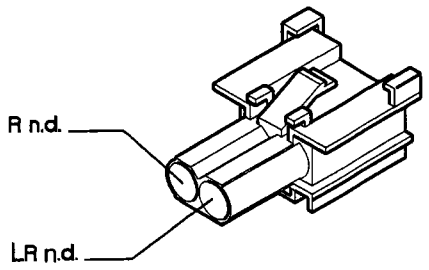

73A Electcric front windows pushbutton unit on left armrest

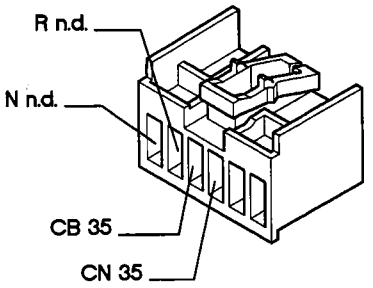

73B Electric front windows pushbutton unit on left armrest

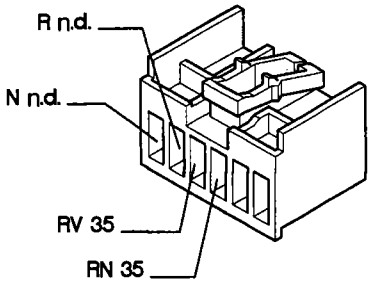

74 Front right electric window pushbutton unit on right armrest

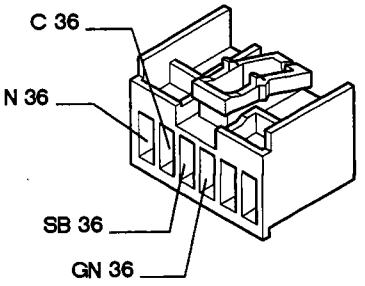

76 Left front window motor

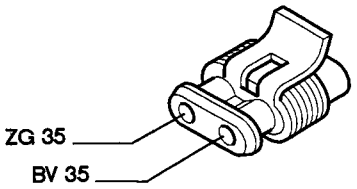

77 Front right electric window motor

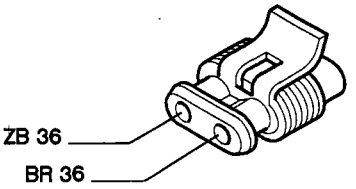

78A Electric rear windows pushbutton unit on front left door

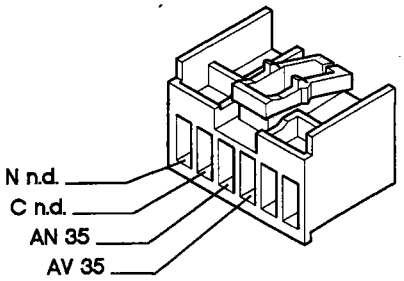

78B Electric rear windows pushbutton unit on front left door

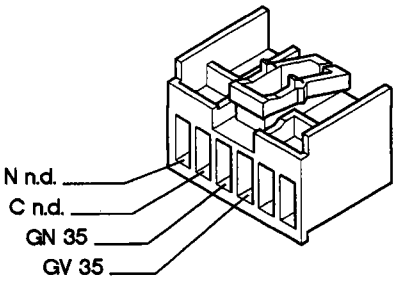

P4F402N01

4F163N

90 Handbrake on warning light switch

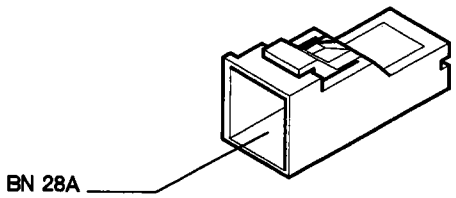

91 Key-dependent power relay

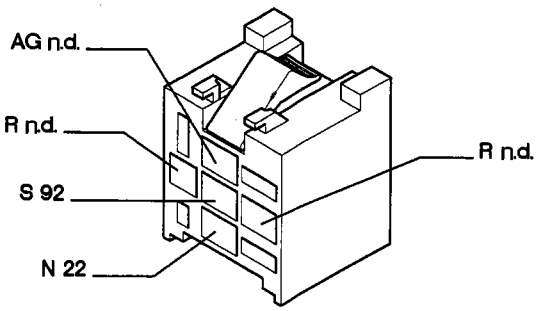

92 Electcric sunroof fuse

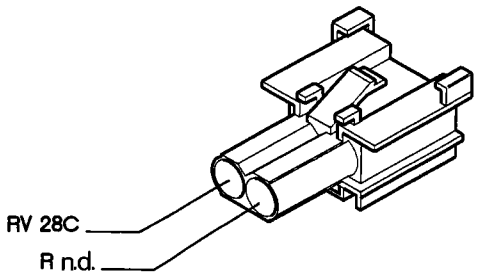

With automatic window closure

92 Electric sunroof fuse

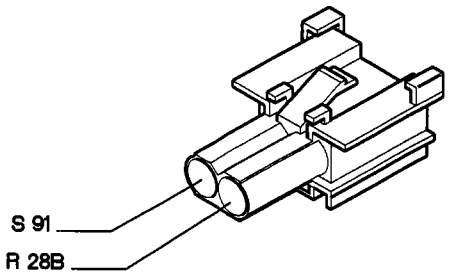

Without automatic window closure

92A Electric sunroof cables connection

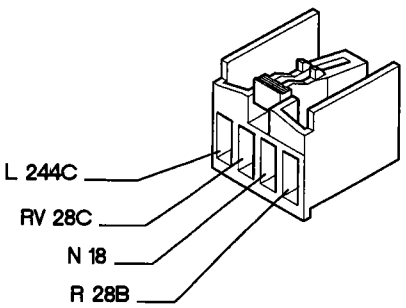

With automatic window closure

92A Electric sunroof cables connection

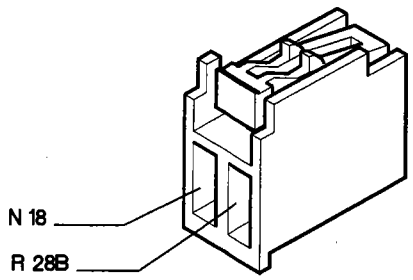

Without automatic window closure

94 A.B.S. fuse

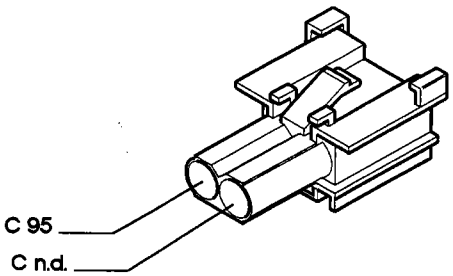

95 Front cables/A.B.S. cables connection

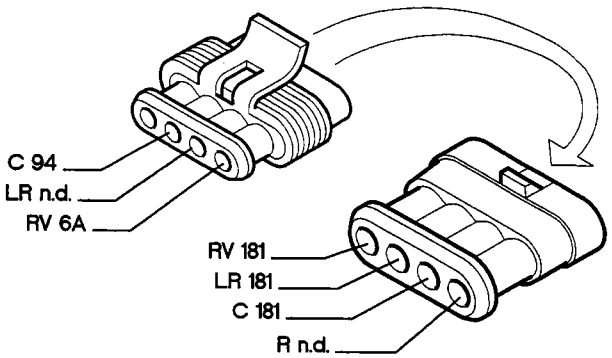

4F156N

P4F405N01

Copyright Fiat Auto

55.

00 A.B.S. power fuse

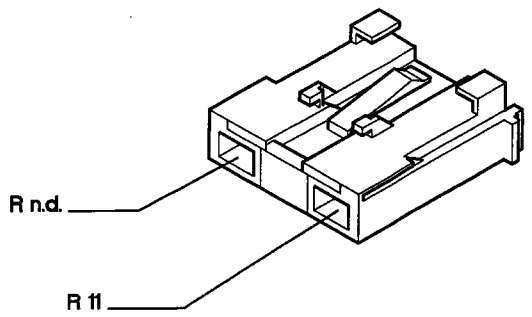

07 Headlamp washer pump

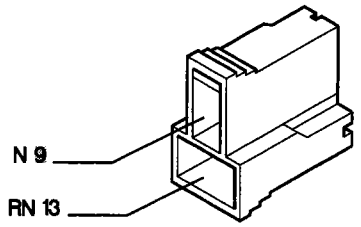

08 Headlamp washer intermittent switch

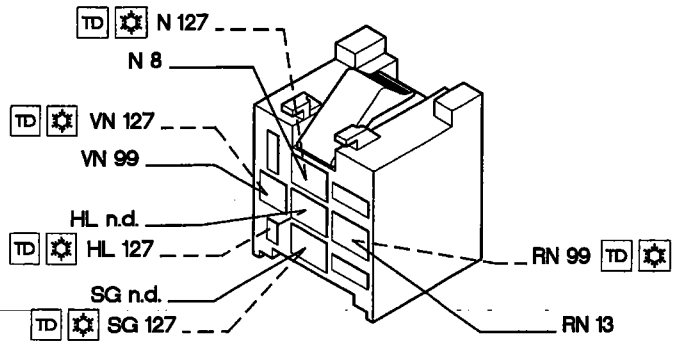

00 Headlamp washer fuse

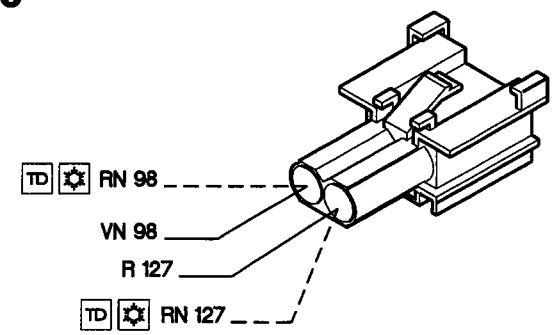

100A Alarm electronic control unit

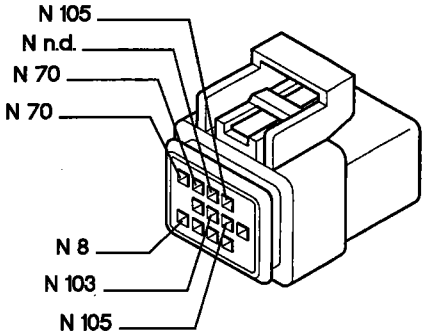

100B Alarm system electronic control unit

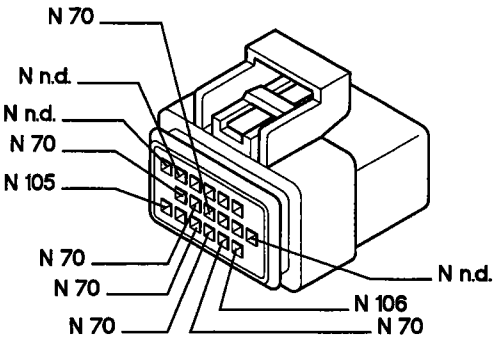

103 Diagnostic socket for alarm

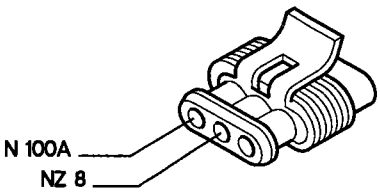

105 Switch for switching off alarm

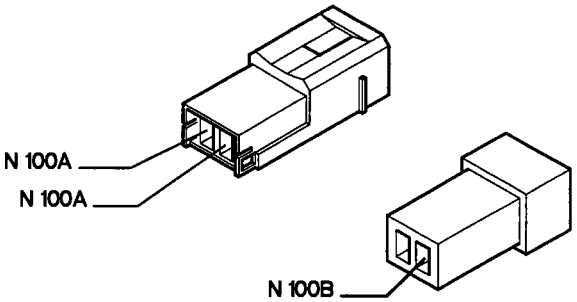

P4F406N02

4F167N

106 Alarm system switch on bonnet

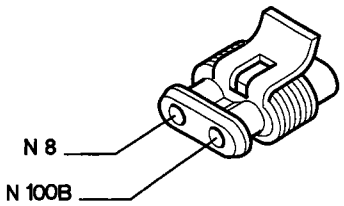

107A Door lock remote control receiver

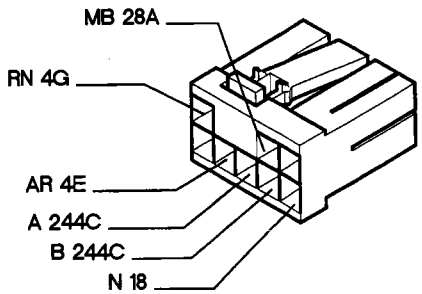

107B Front courtesy light

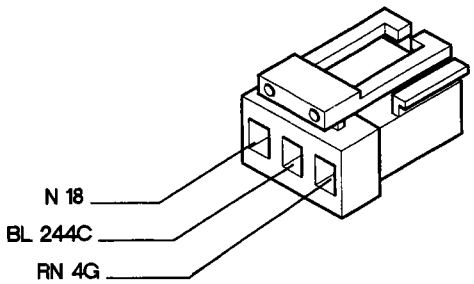

108A Rear left door lock

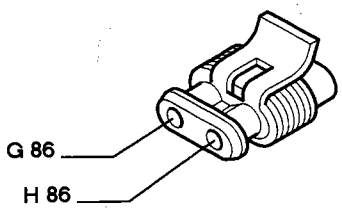

108C Rear left door lock

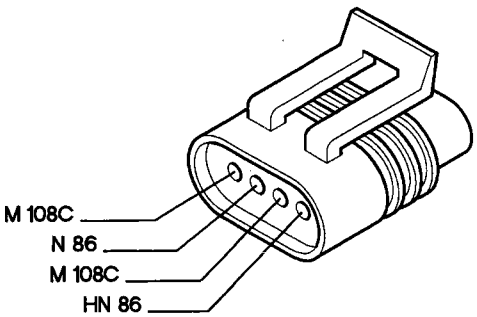

109A Rear right door lock

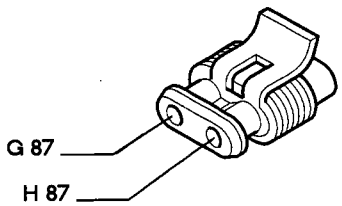

109C Rear right door lock

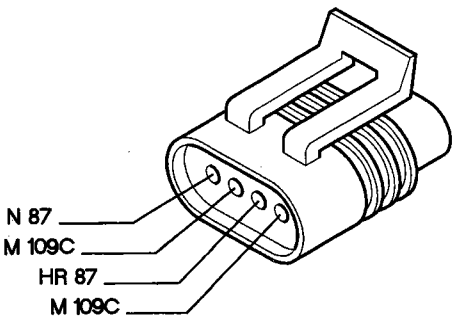

110A Front left door lock

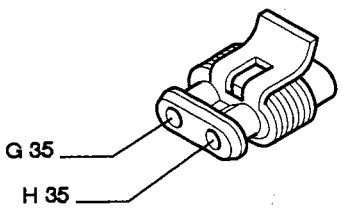

P4F407N01

4F158N

Copyright Fiat Auto

55.

110B Front left door lock

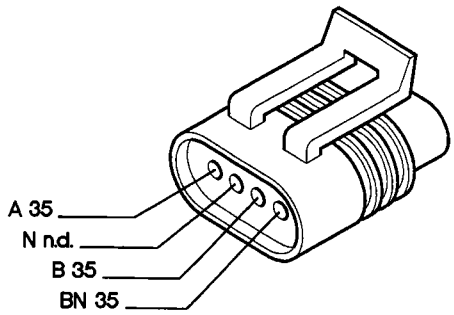

With automatic window closure

110B Front left door lock

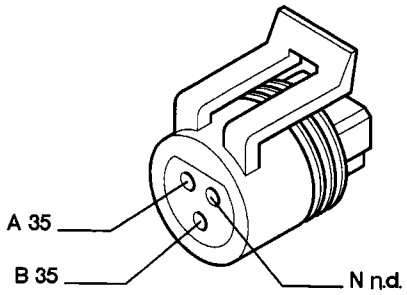

Without automatic window closure

110C Front left door lock

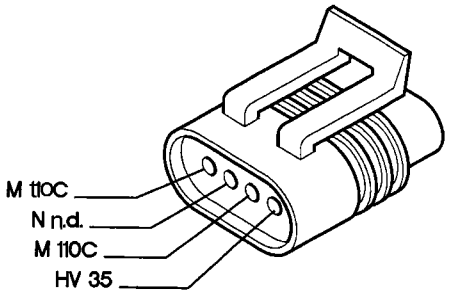

111A Front right door lock

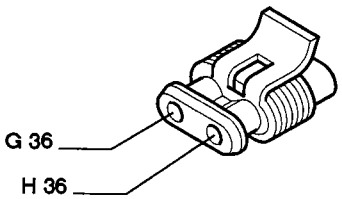

111B Front right door lock

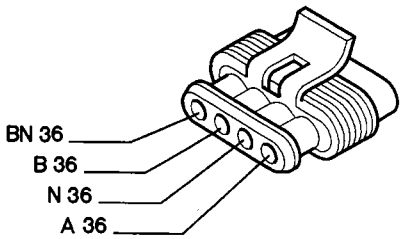

With automatic window closure

111B Front right door lock

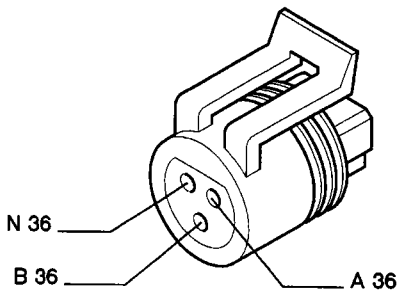

Without automatic window closure

111C Front right door lock

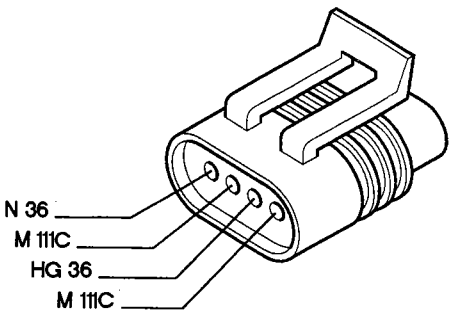

113 Door locking system fuse

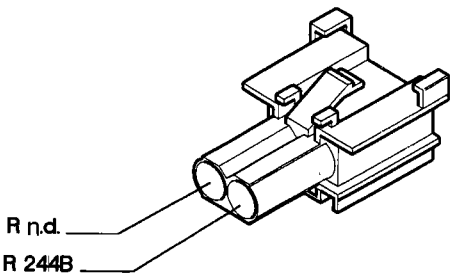

4F159N

P4F408N01

114 Air Bag electronic control unit

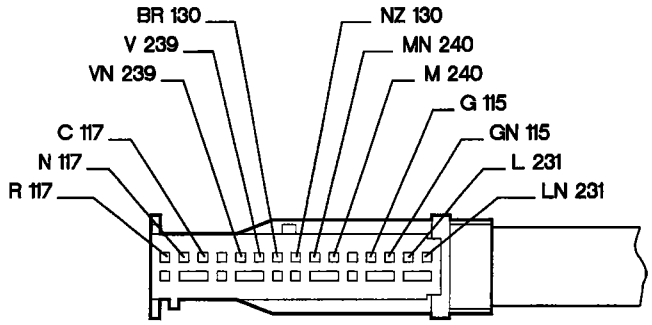

115 Passenger's Air Bag

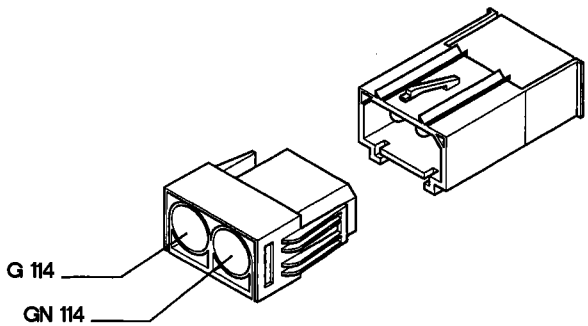

116 Driver's Air Bag

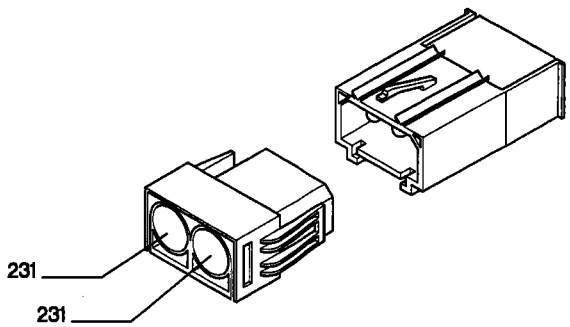

117 Air Bag/dashboard cables connection

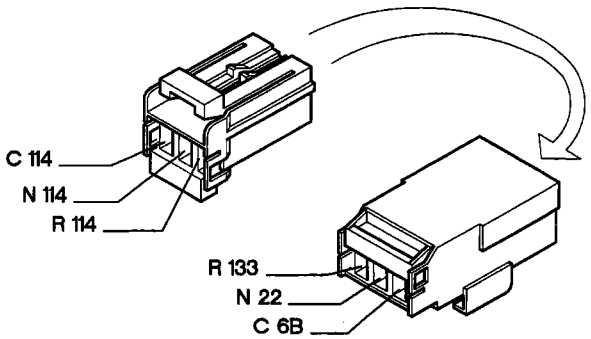

120A Air conditioner cables connection

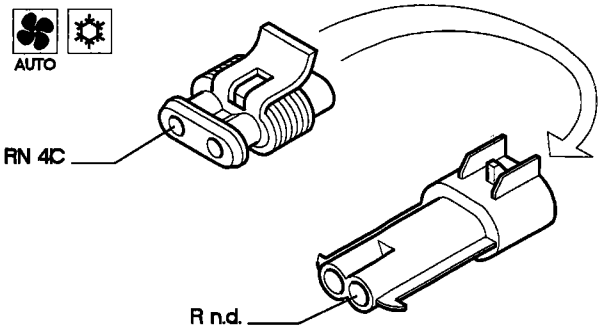

120B Air conditioner cables connection

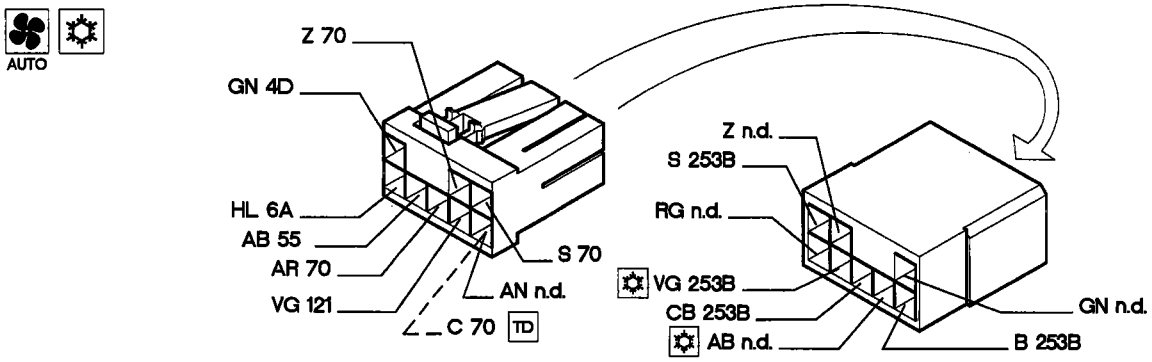

4F160N

P4F409N02

55.

121 Three-stage pressure switch

1370

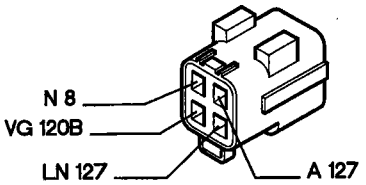

1581

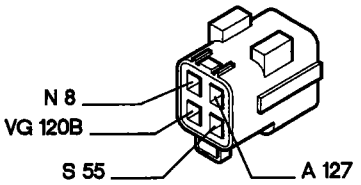

1747

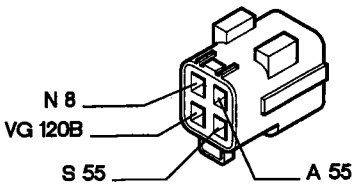

1998

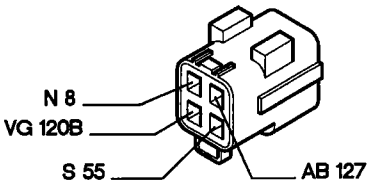

1910-75

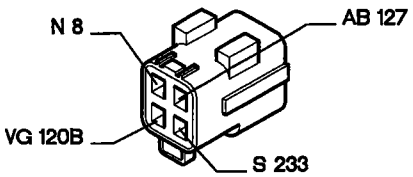

1910-100

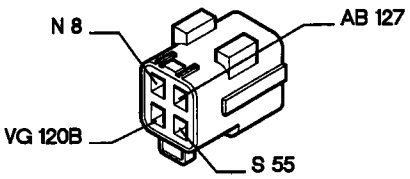

2387

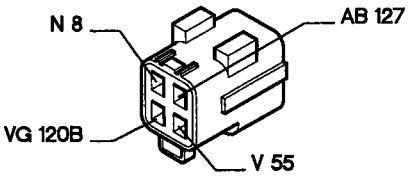

122 Engine cooling fan low speed relay

1370
1581
1998

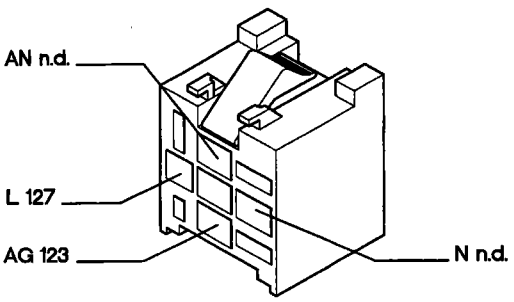

1747

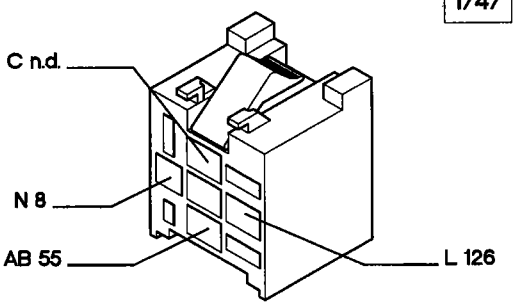

P4F410N02

4F161N

122 Engine cooling fan low speed relay

1910
2387

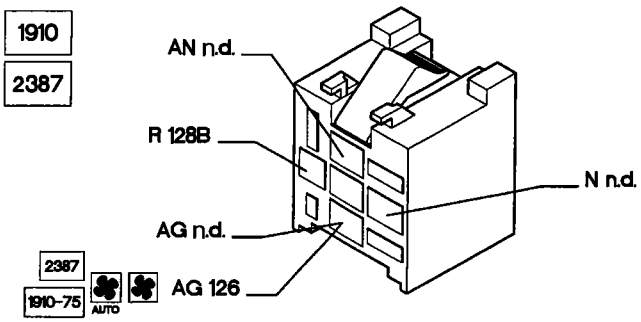

123 Engine cooing fan high speed timer

1370
1581
1998
TD

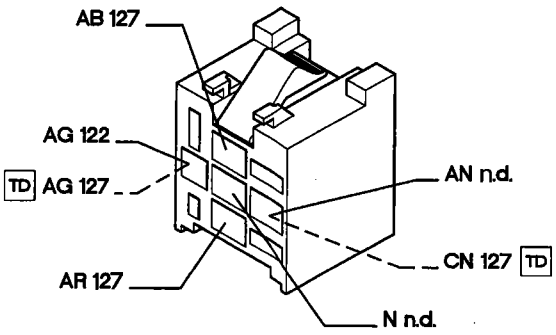

123A Engine cooling fan high speed relay

1370
1581

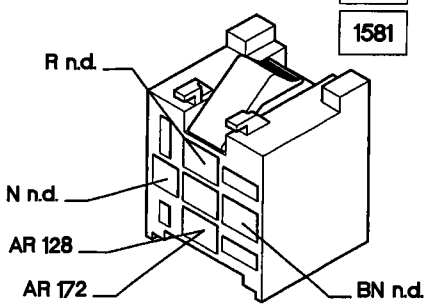

1747

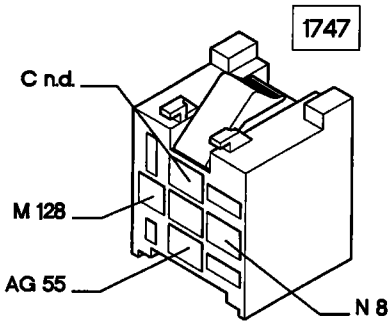

1998

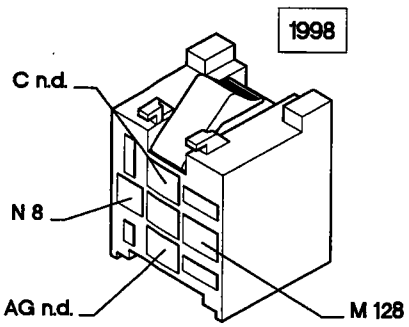

1910
2387

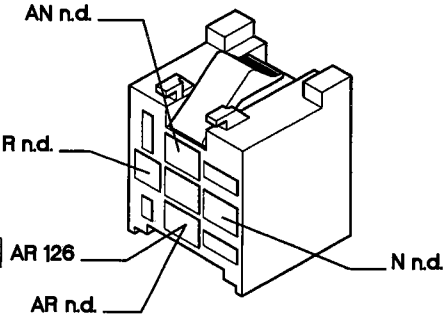

1910-75
2387
AUTO

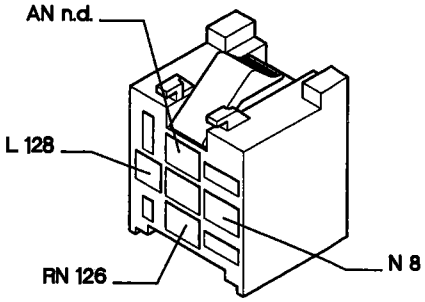

1910-100
AUTO

124 Air conditioner compressor relay

1370
1581
1998
TD

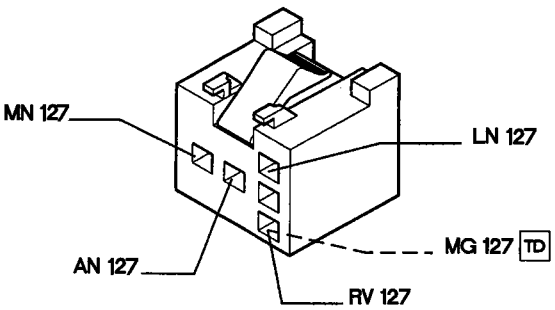

1747

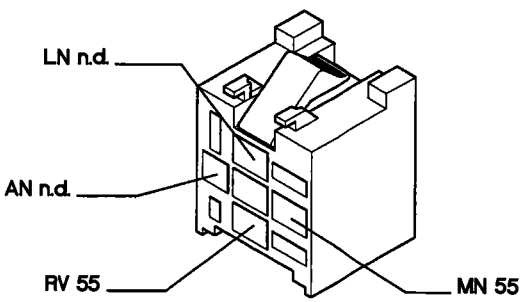

4F162N

P4F411N02

126 Front/radiator cables connection

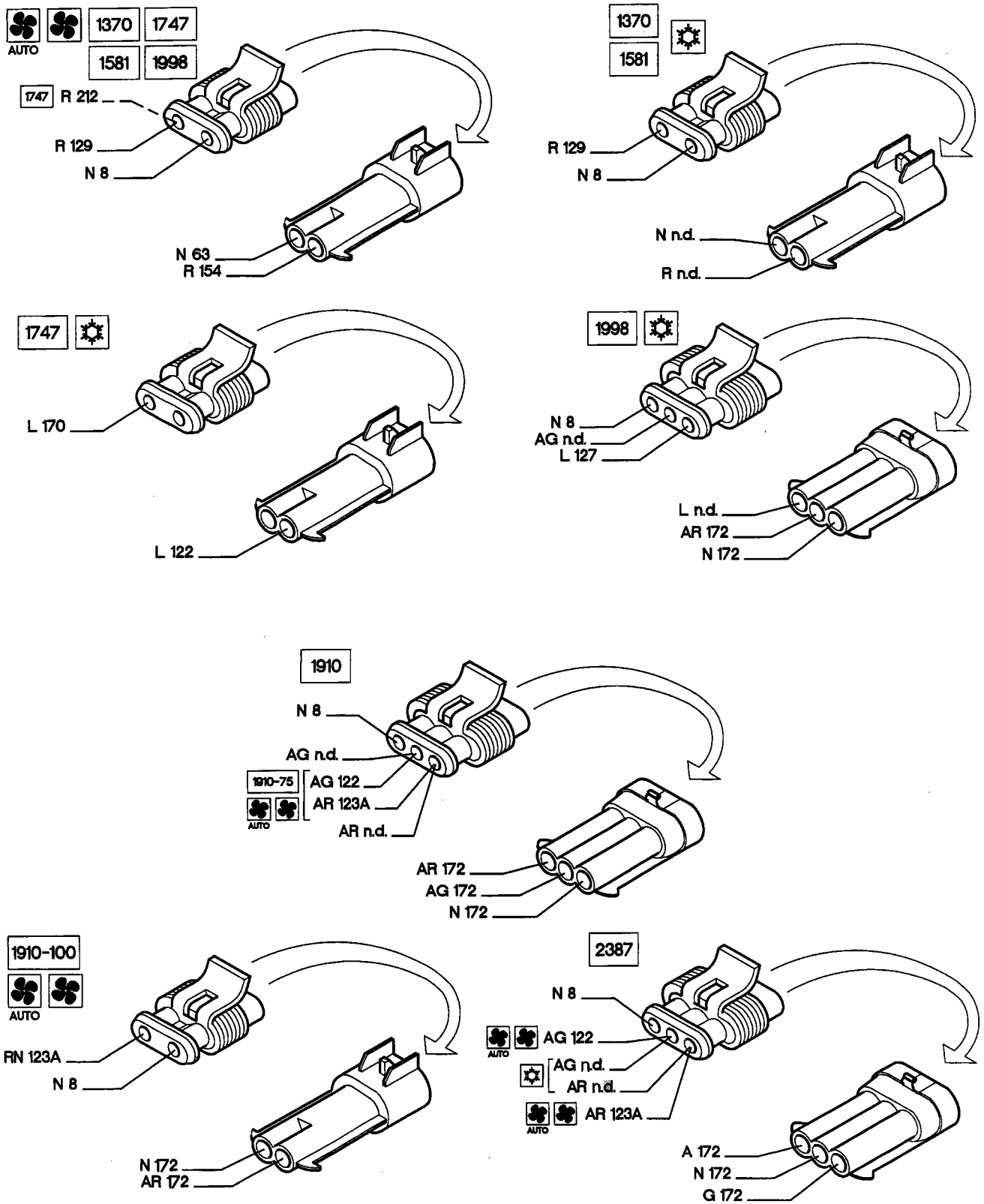

4F163N

P4F412N02

127 Front left cable/relay mounting bracket cable connection

1370
1581

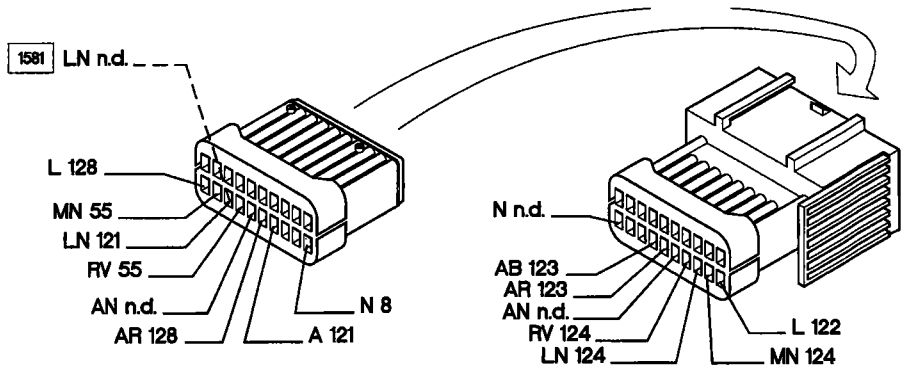

1998

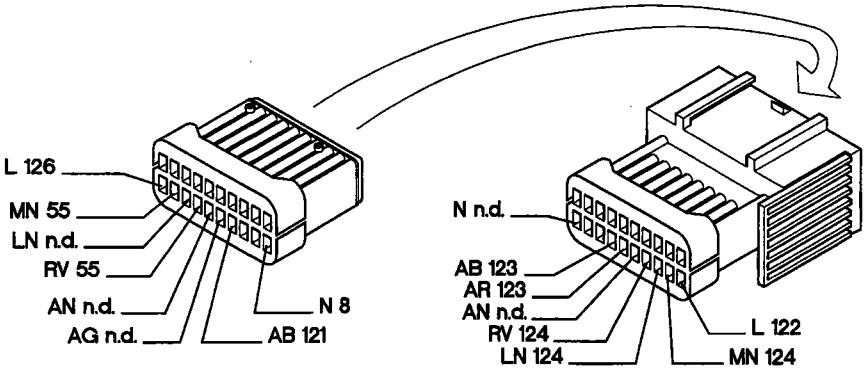

2387

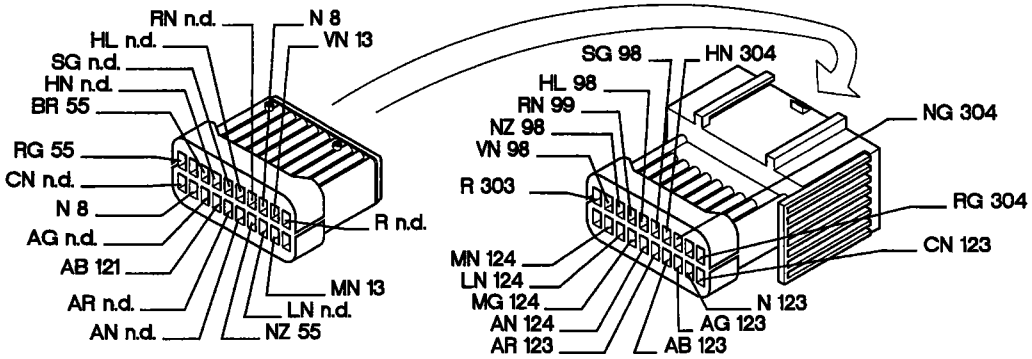

1910-75

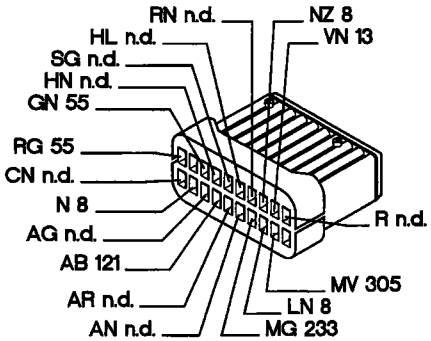

1910-100

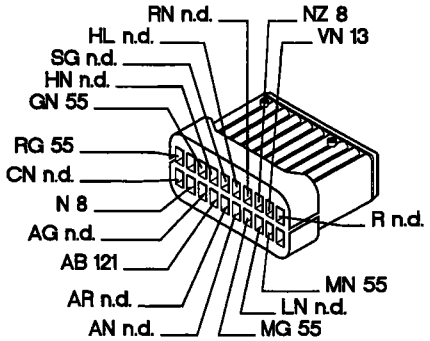

P4F413N02

4F164N

128 Front/radiator cables connection

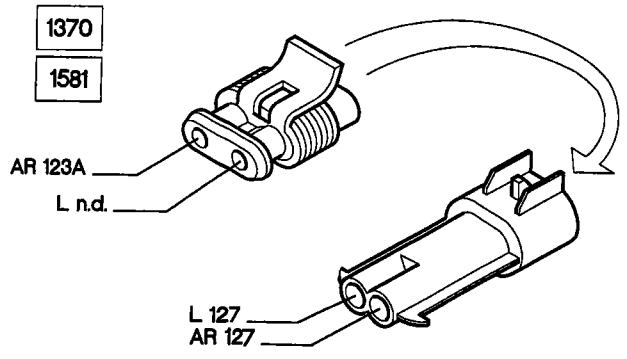

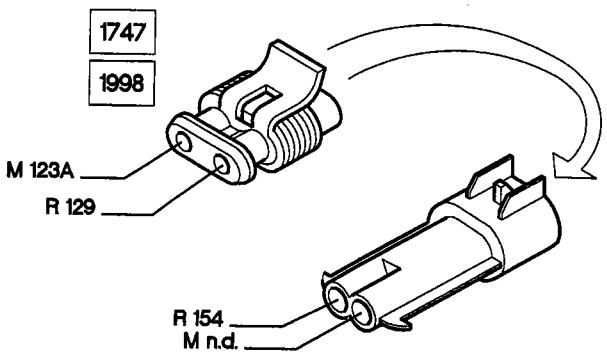

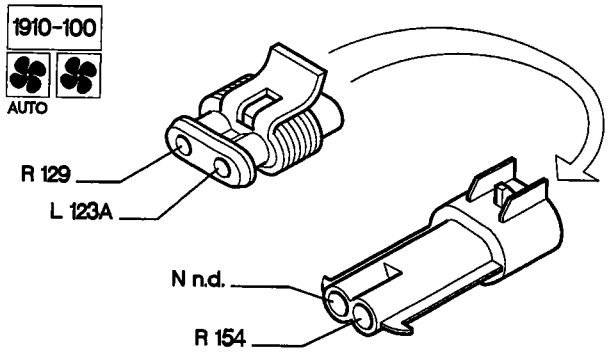

128A Front/radiator cables connection

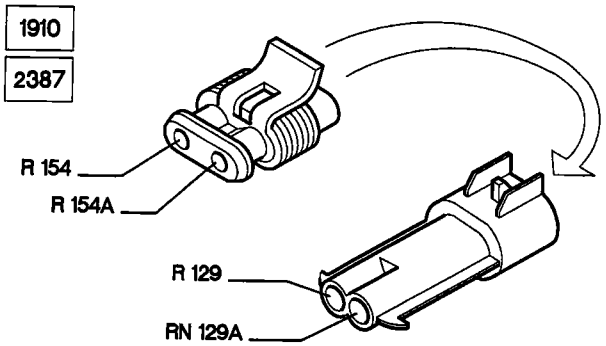

128B Front/radiator cables connection

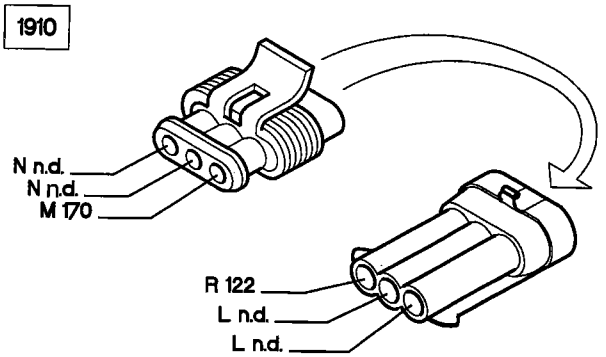

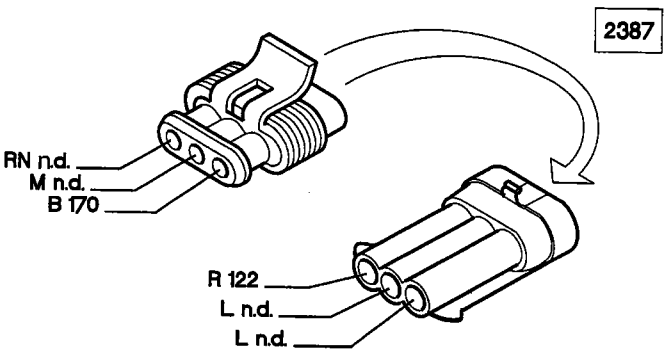

129 Engine cooling fan power fuse

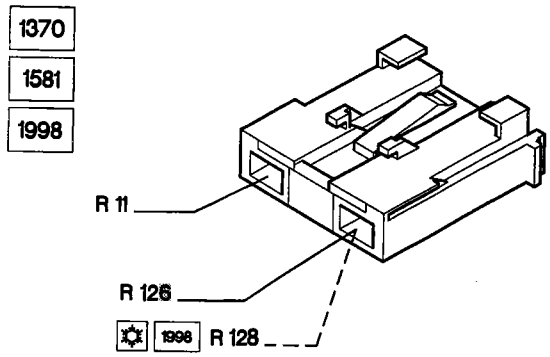

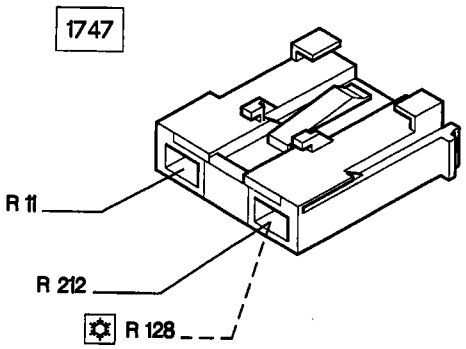

4F165N

P4F414N02

129 Engine cooling fan power fuse

1910
2387

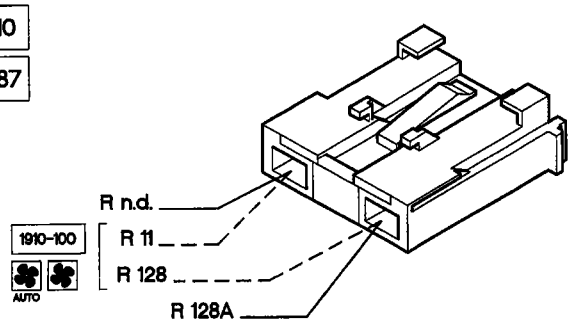

129A 2nd engine cooling fan power fuse

1910-75
1910-100
2387

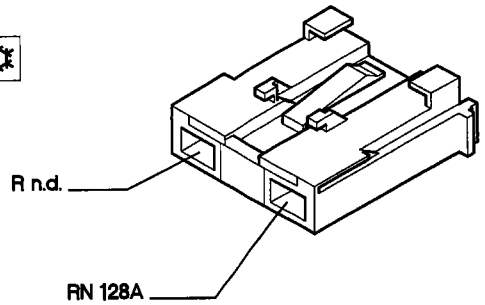

130 Diagnostic socket for Air Bag

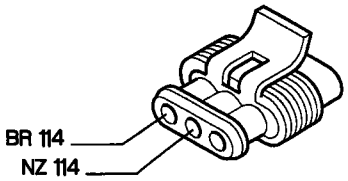

131 Fiat CODE fan control unit

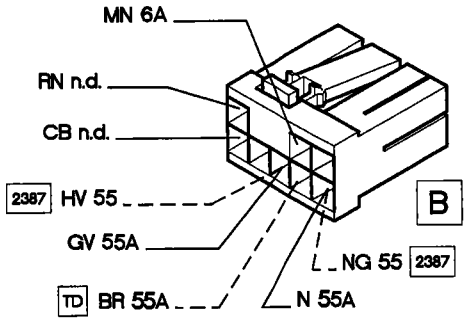

132 Petrol vapour cut-off solenoid (canister)

1370
1747
1998

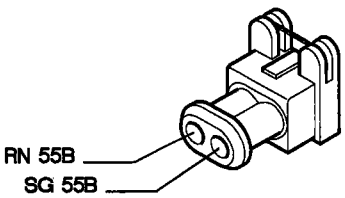

1581

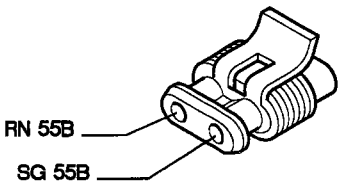

133 Air Bag fuse

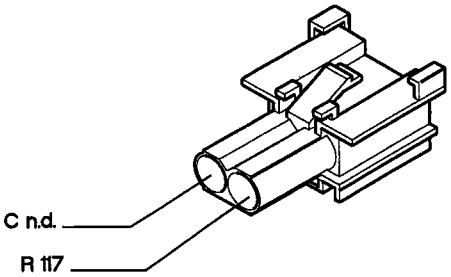

134 Rear cables/heated driver's seat connection

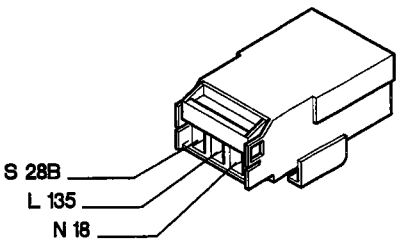

P4F415N02

4F166N

55.

135 Rear cables/passenger's heated seat connection

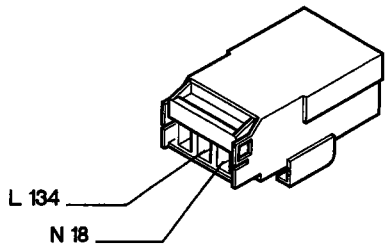

136A Knock sensor (1998)

1998

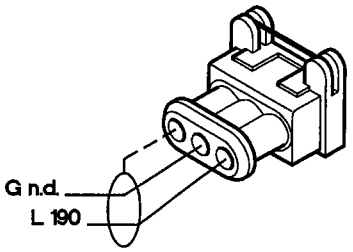

136 Knock sensor

1370

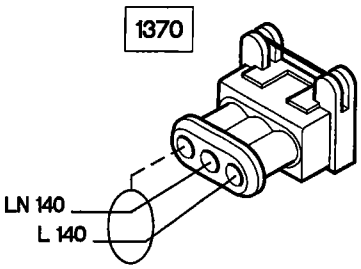

1747

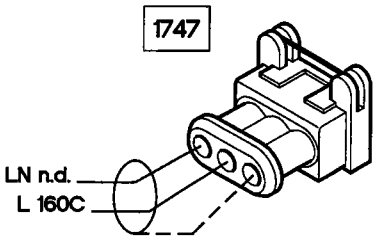

1998

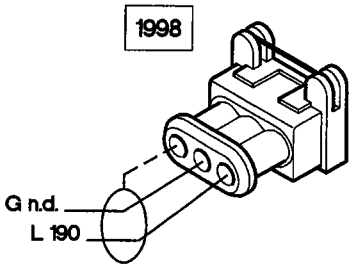

137 Car speed sensor

1370
1581
1998
1910
2387

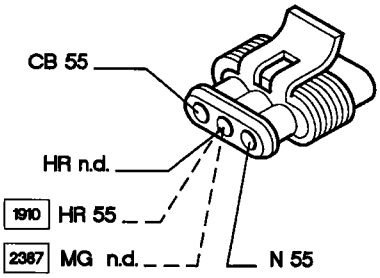

1747

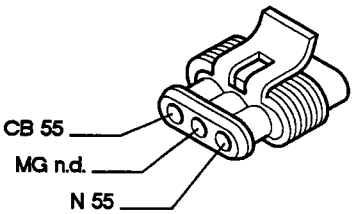

138 Idle adjustment motor (1370-1581)

1370

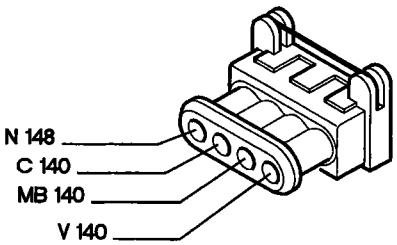

1581

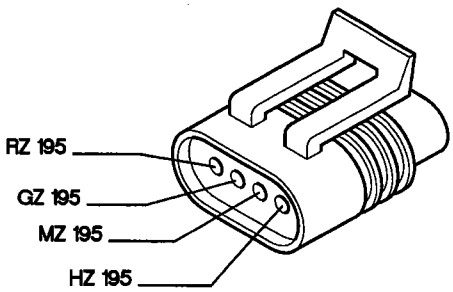

4F167N

P4F416N02

139 Diagnostic socket for fuel injection

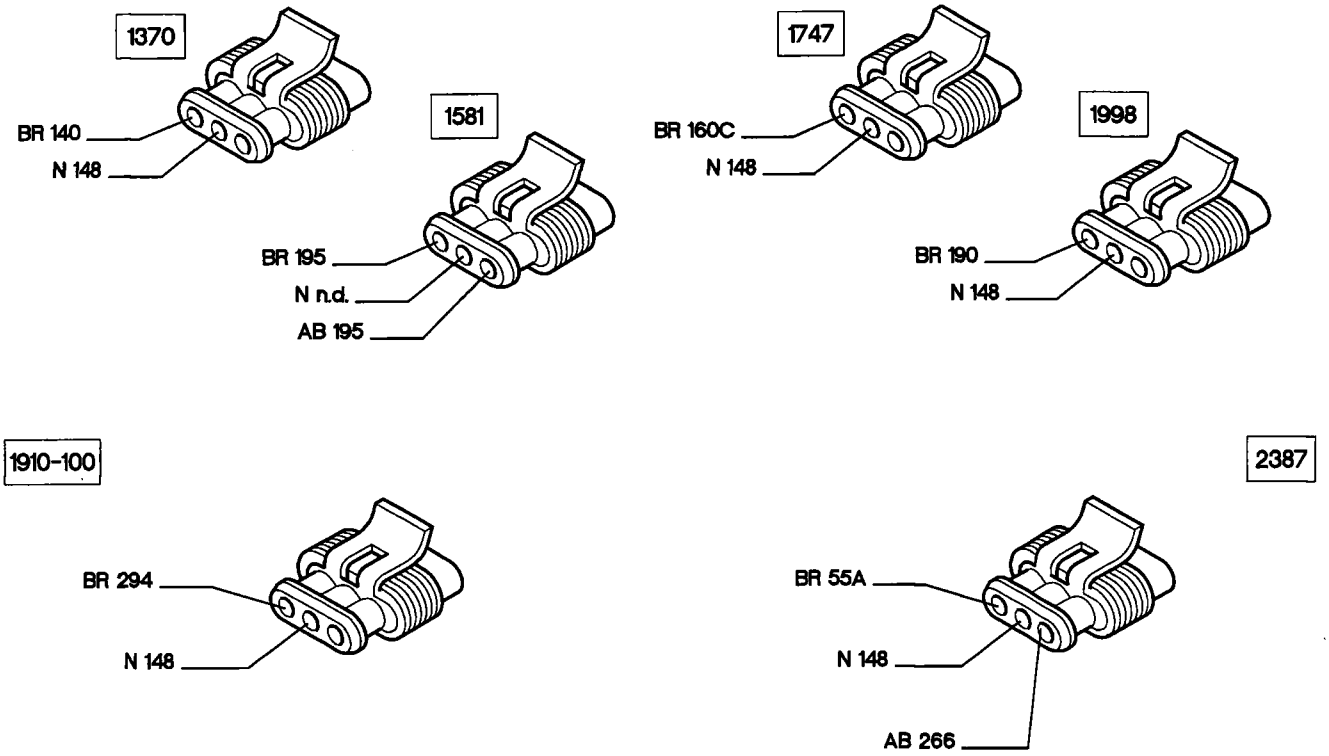

140 Fuel injection/ignition control unit (1370)

1370

1	RN n.d.	16	R 144	31	V 138
2	BR 55A	17	L 55	32	B 144
3	C 138	18	HR n.d.	33	N 148
6	GV 55A	19	R n.d.	34	V 155
7	BV 149	20	N 148	35	B 155
8	SN 157	21	BG 149		
9	VB 146	23	S 55		
10	HB 146	24	CB 146		
11	BN n.d.	25	NZ 151		
12	N 141	27	SG 55B		
13	G 141	28	LN 55		
14	L 136	29	MB 138		
15	LN 136	30	N 148		

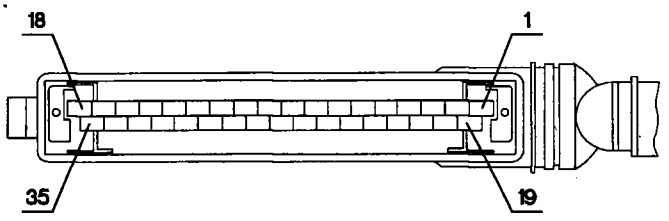

4F168N

P4F417N02

55.

141 Heated Lambda probe

1370

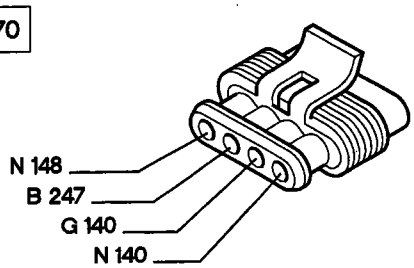

1581

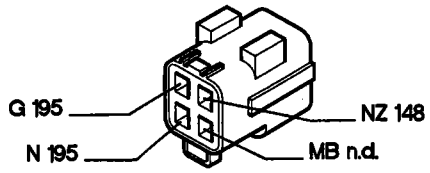

1747

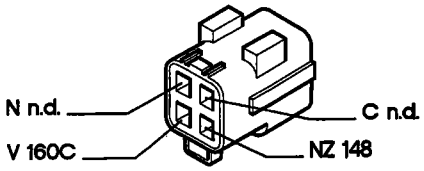

1998

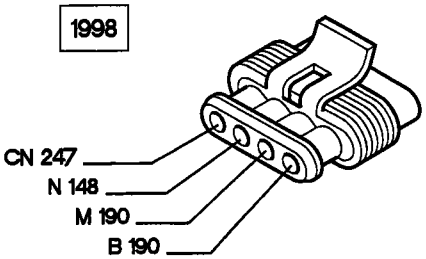

142 Low oil pressure warning light switch

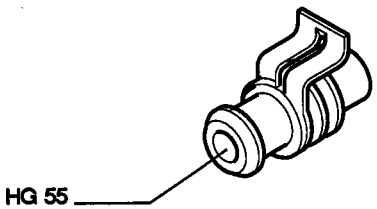

143 Alternator

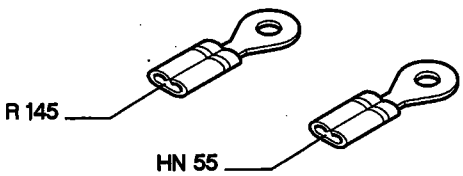

P4F418N02

4F169N

144 Rpm and TDC sensor

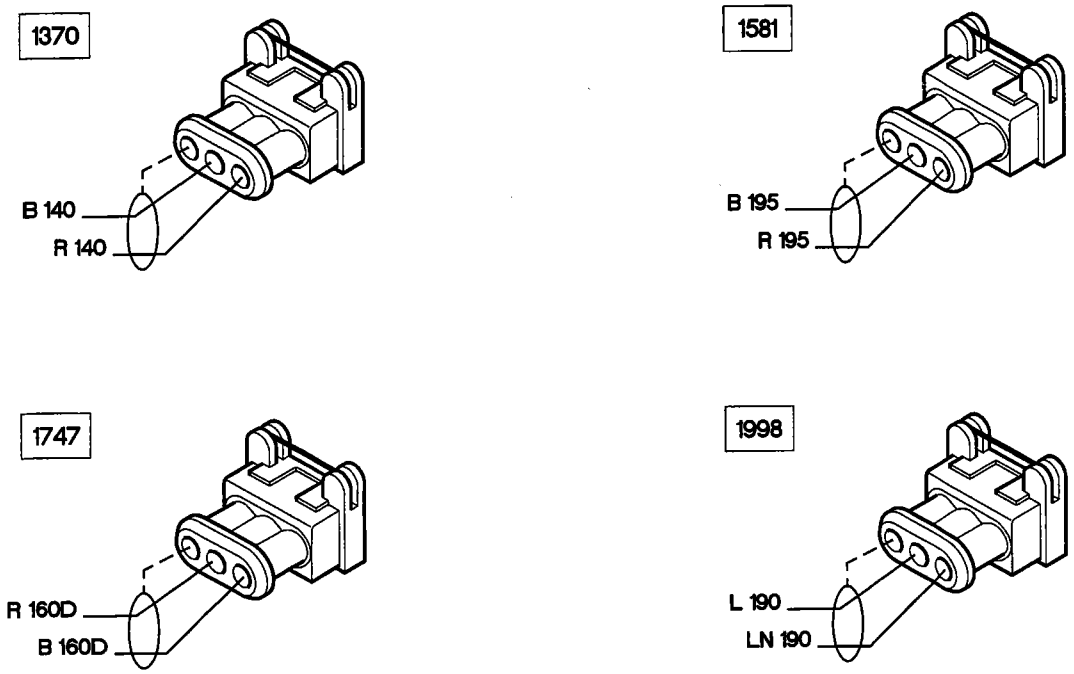

145 Starter motor

145A Starter motor

P4F419N02

4F170N

146 Potentiometer on throttle valve

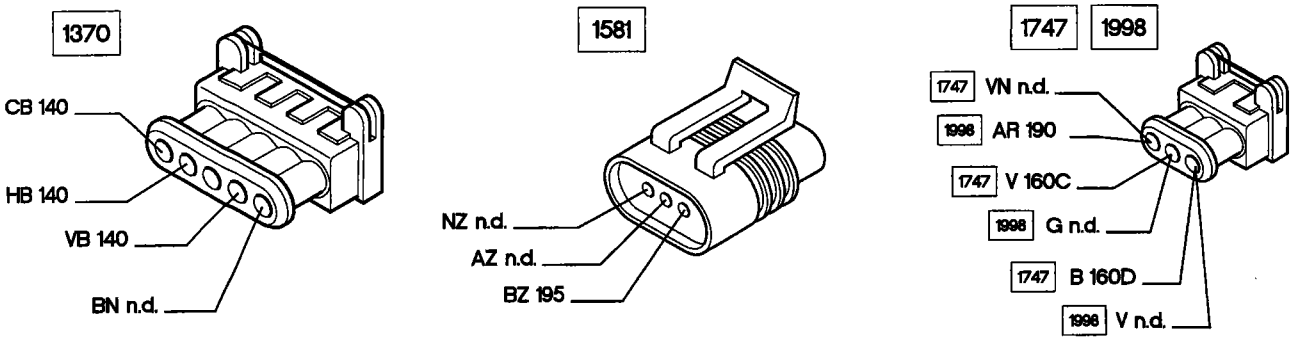

147 Compressor for air conditioner

148 Electronic fuel injection earth

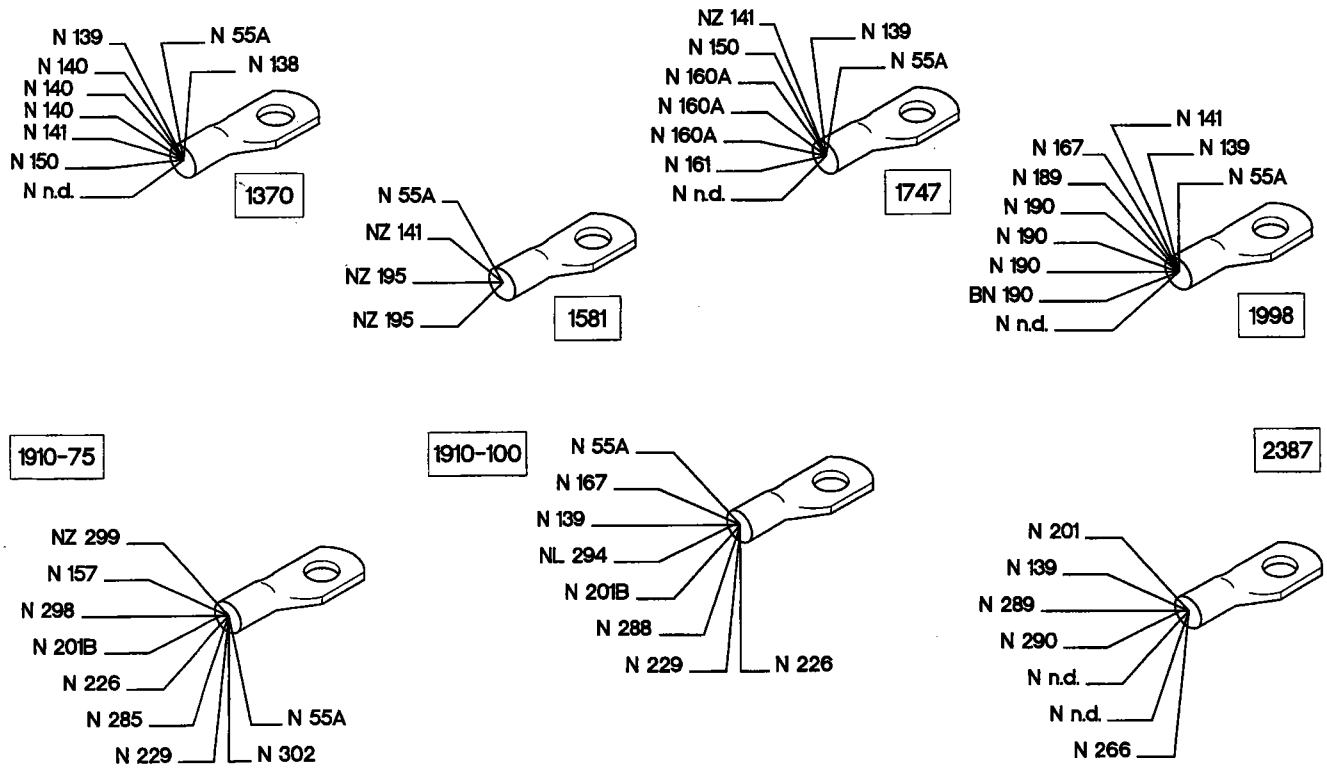

4F171N

P4F420N02

149 Instrumented injector (1370)

1370

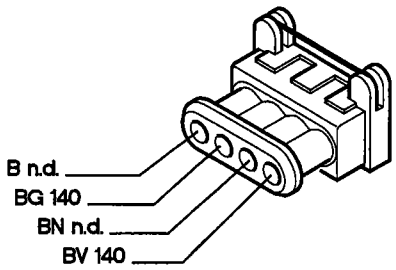

150 Fuel injection system relay (1370-1747-1998)

1370

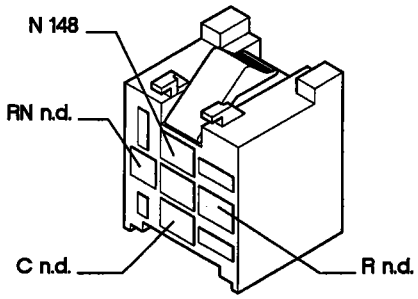

1747

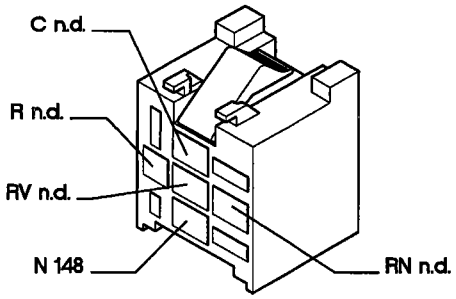

1998

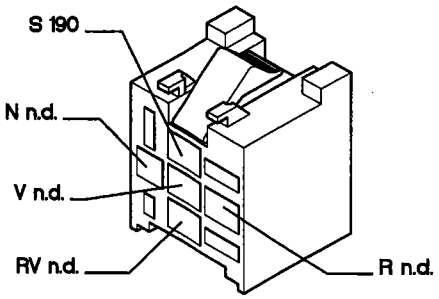

151 Relay for Lambda probe, fuel pump, fuel injectors (1370-1998)

1370

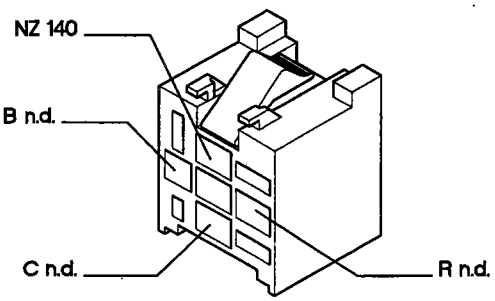

1998

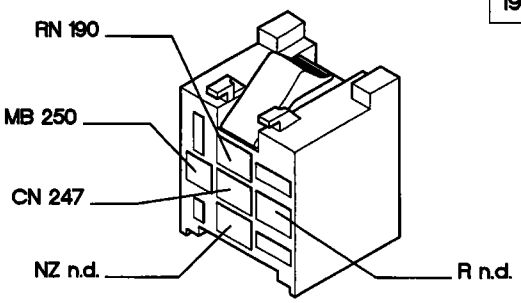

P4F447N01

4F202N

55.

152 Fuel injection system fuse (1581)(1747)

1581
1747

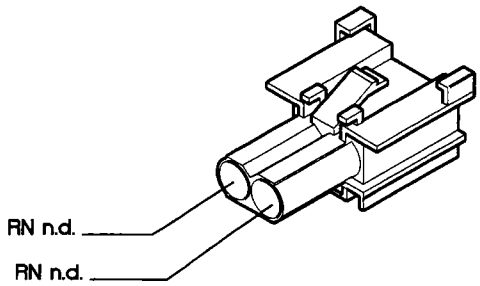

154 Engine cooling fan

AUTO

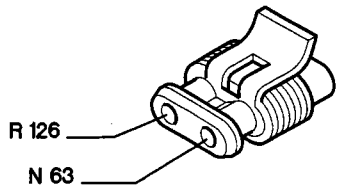

1747
1998

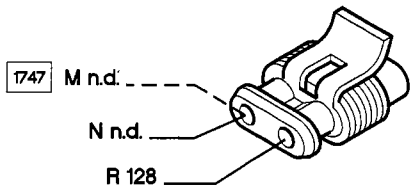

1370
1581

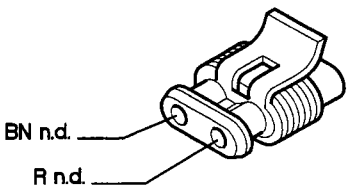

1910
2387

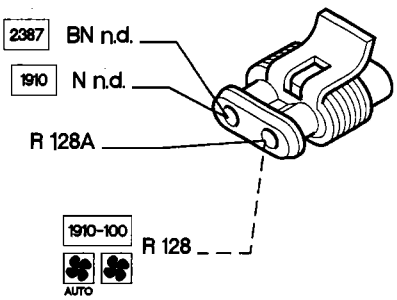

154A Engine cooling fan

1910
2387

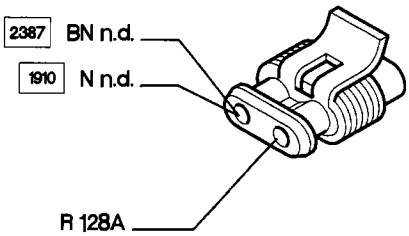

P4F448N01

4F203N

155 Ignition coils assembly

157 Water temperature sensor for fuel injection

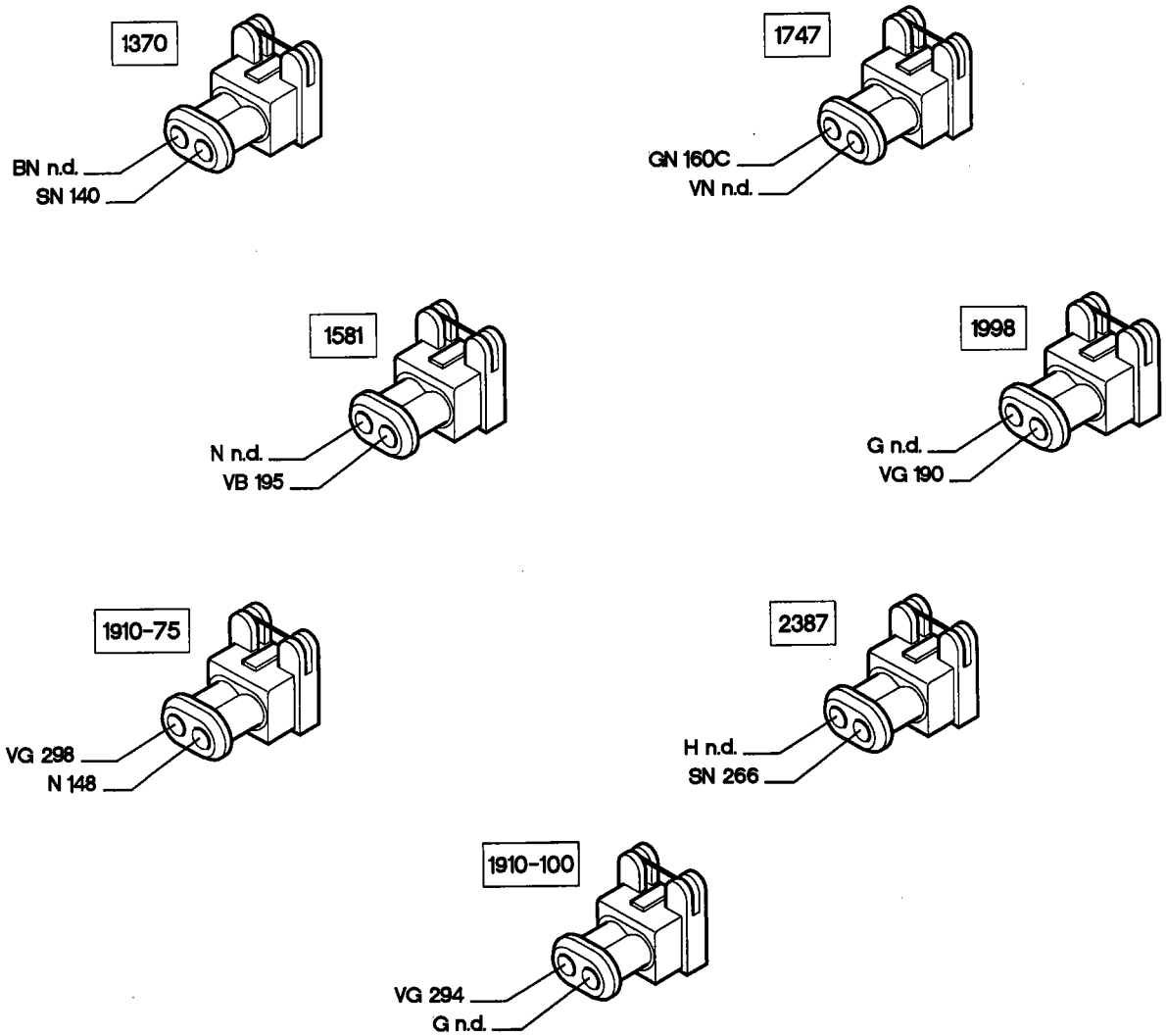

P4F449N01

158 Water temperature sensor for instrument

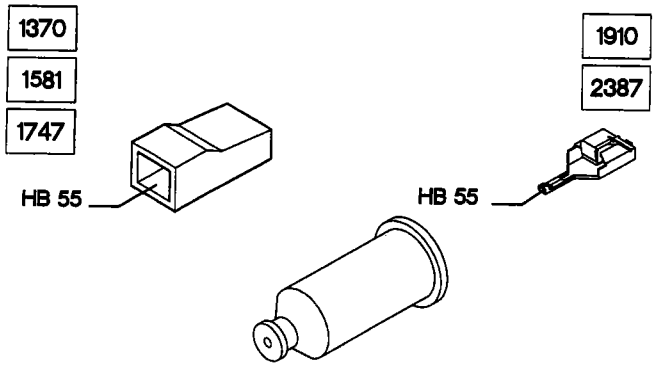

150 Reversing lights switch

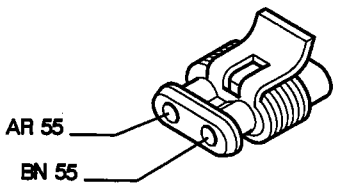

160 Electronic ignition/fuel injection control unit (1747)

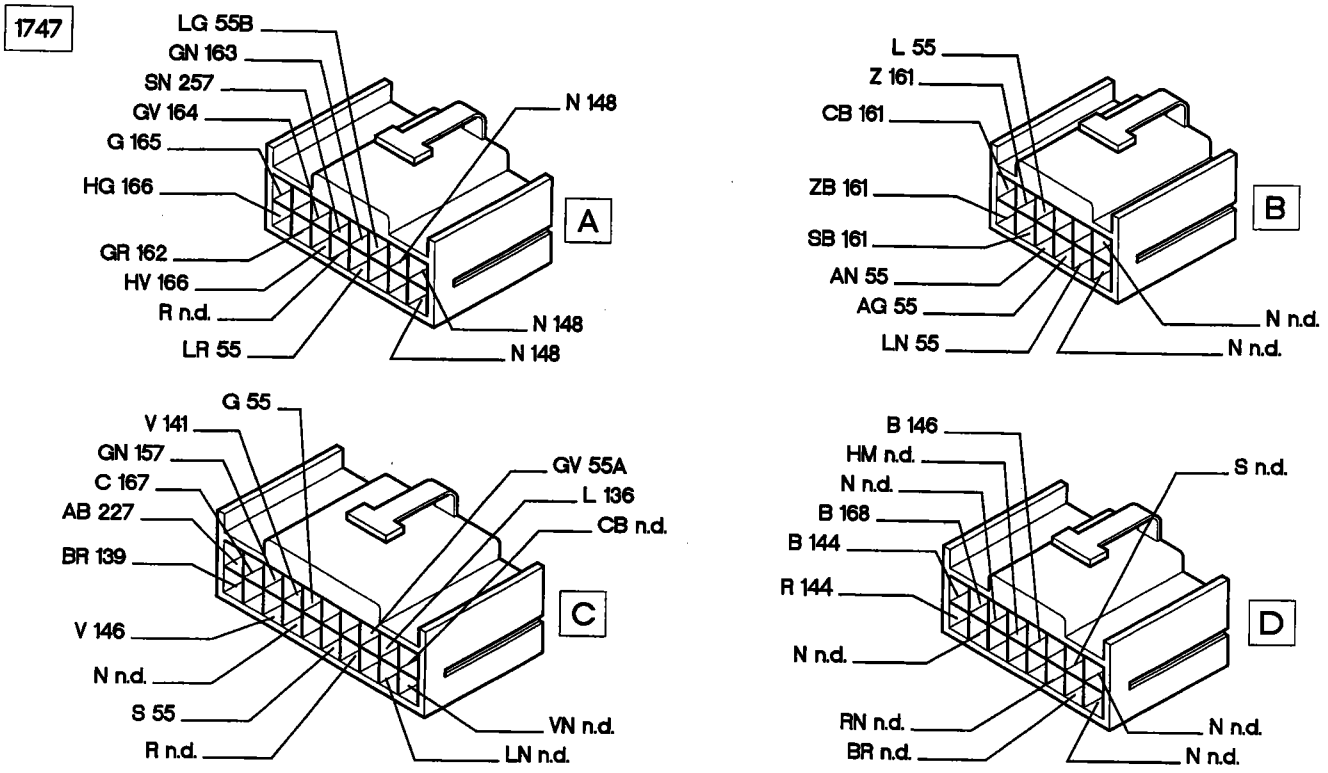

P4F450N01

4F205N

161 Ignition power module

1747

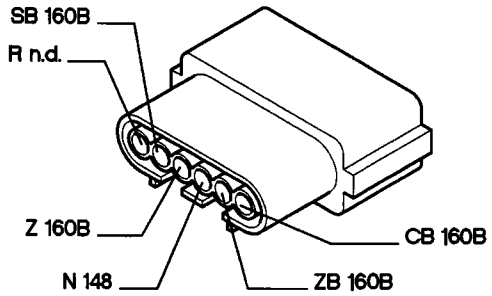

162 Fuel injector (1st)

1581

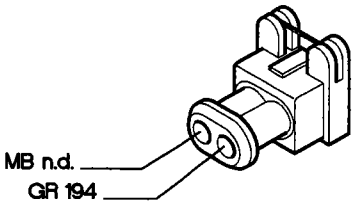

163 Fuel injector (2nd)

1581

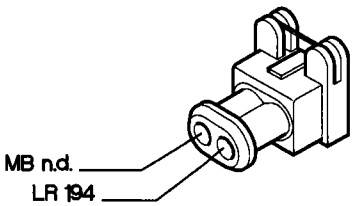

164 Fuel injector (3rd)

1581

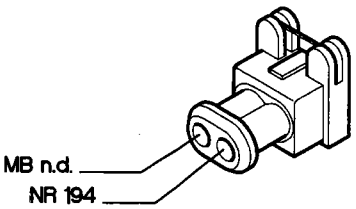

165 Fuel injector (4th)

1581

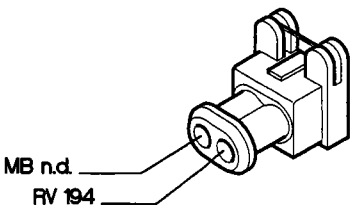

162 Fuel injector (1st)

1747

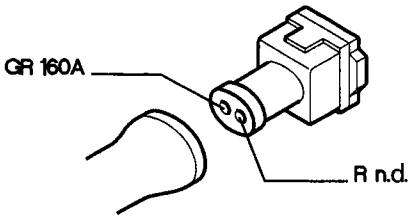

163 Fuel injector (2nd)

1747

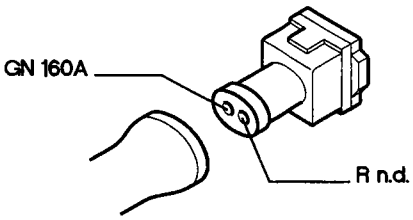

P4F421N01

4F172N

Copyright Fiat Auto

55.

164 Fuel injector (3rd)

1747

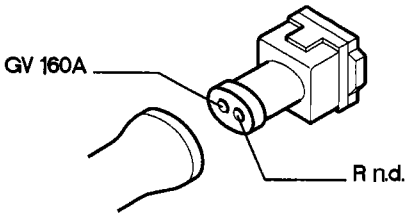

165 Fuel injector (4th)

1747

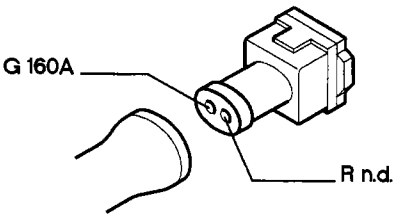

162 Fuel injector (1st)

1998

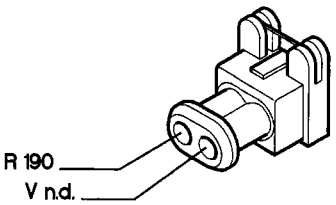

163 Fuel injector (2nd)

1998

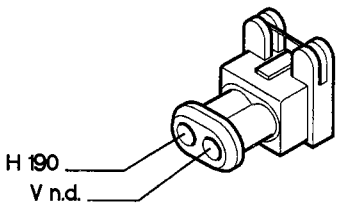

164 Fuel injector (3rd)

1998

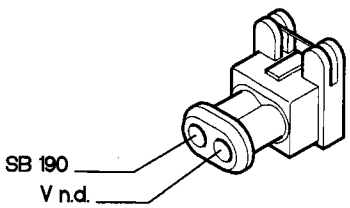

166 Fuel injector (4th)

1998

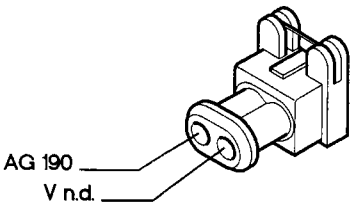

165A Fuel injector (5th)

1998

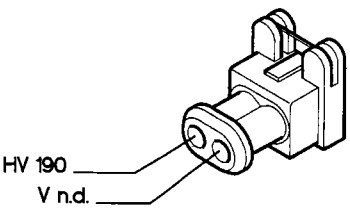

4F173N

P4F422N01

166 Idle adjustment motor

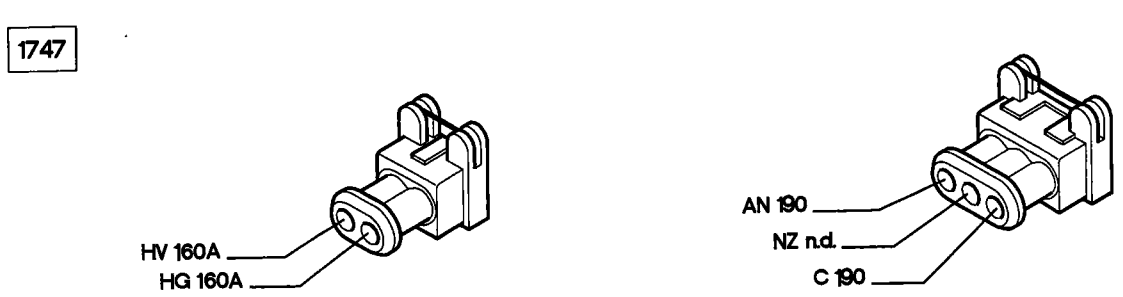

167 Air flowmeter

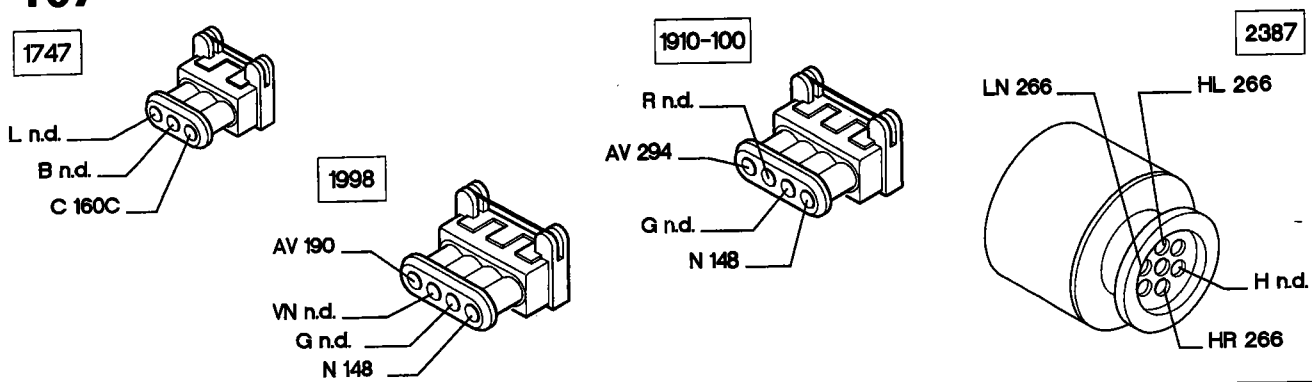

168 Timing sensor

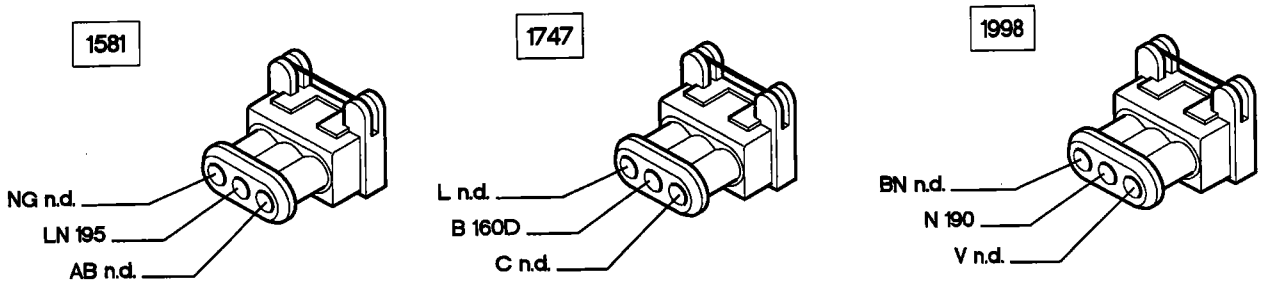

170 Resistor for engine cooling fan

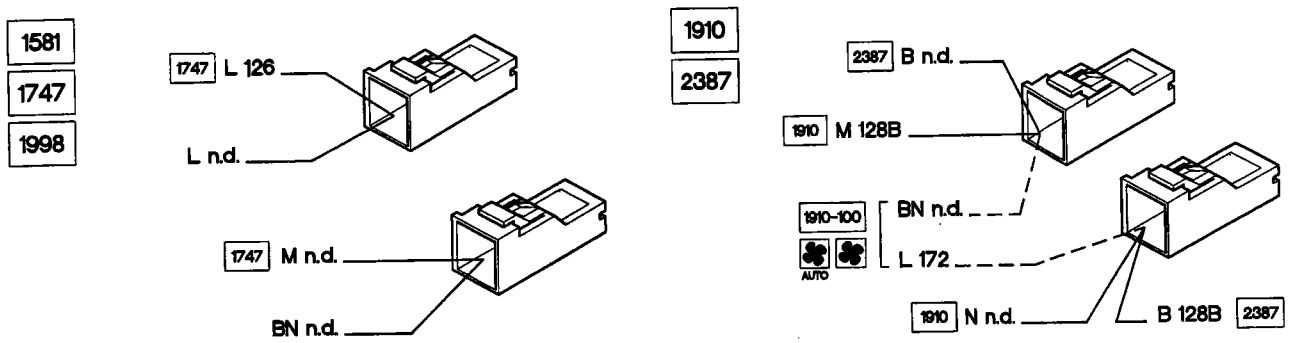

P4F423N02

4F174N

171 Heater cables connections

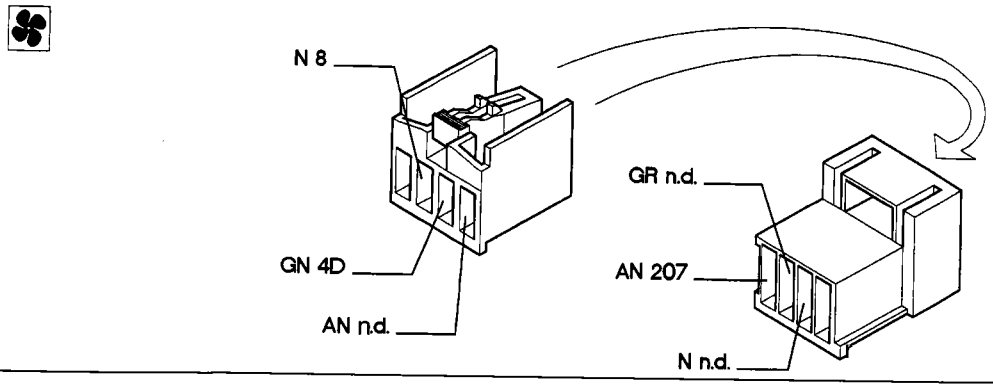

172 Two-stage thermostat

1370
1581
1998

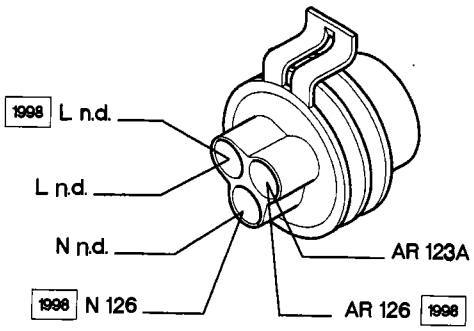

1910
2387

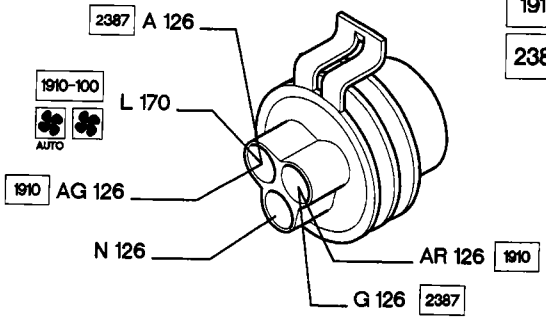

174 Power earth for anti-lock braking system (A.B.S.)

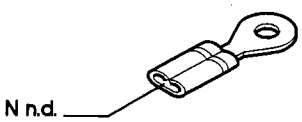

176 Diagnostic socket for anti-lock braking system (A.B.S.)

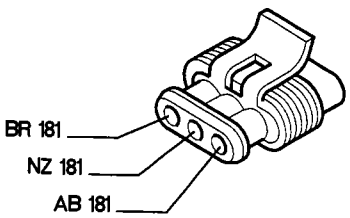

177 Sensor on front left wheel for anti-lock braking system (A.B.S.)

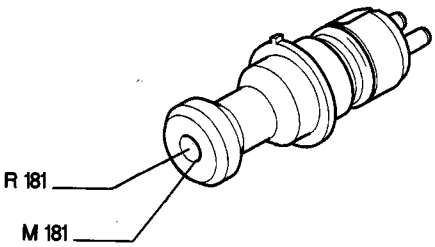

178 Sensor on rear left wheel for anti-lock braking system (A.B.S.)

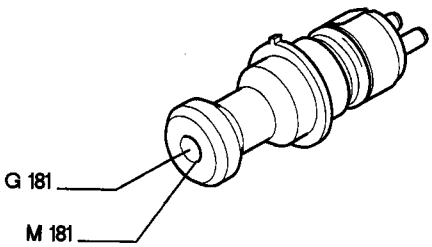

4F175N

P4F424N02

179 Sensor on front right wheel for anti-lock braking system (A.B.S.)

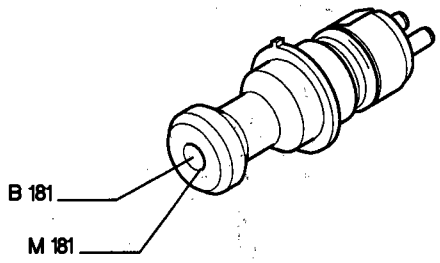

180 Sensor on rear right wheel for anti-lock braking system (A.B.S.)

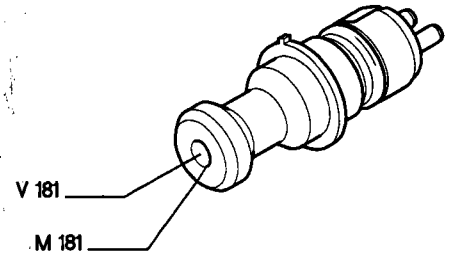

181 Electrohydraulic control unit for anti-lock braking system (A.B.S.)

1	BR 176	18	RV 95
6	M 177	19	AB 176
7	R 177	20	LR 95
8	M 179	23	G 178
9	N n.d.	24	M 180
10	R n.d.	25	NZ 176
11	C 95	26	M 178
16	B 179	27	N n.d.
17	V 180	28	R n.d.

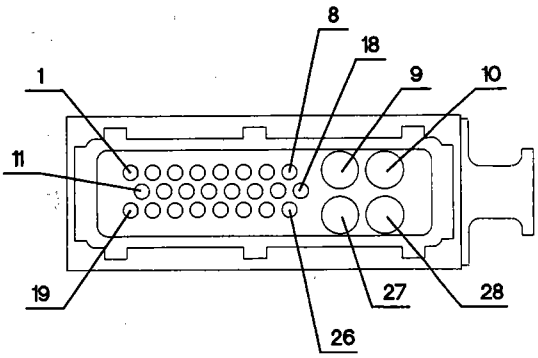

182A Right brake pad wear sensor cables connection

1998

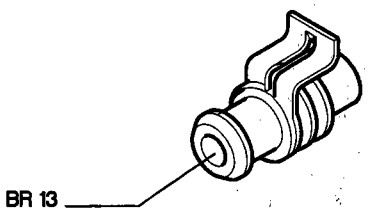

183 Ignition coil (1st)

1998

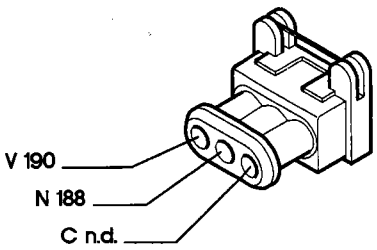

P4F425N01

4F176N

Copyright Fiat Auto

55.

184 Ignition coil (2nd)

1998

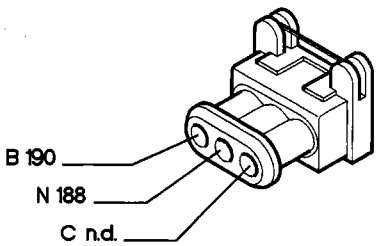

185 Ignition coil (3rd)

1998

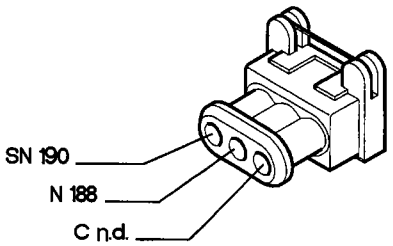

188 Ignition coil (4th)

1998

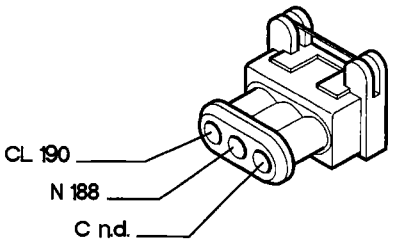

187 Ignition coil (5th)

1998

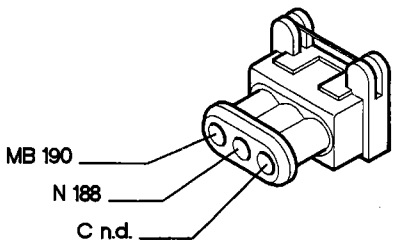

188 Ignition coil earth

1998

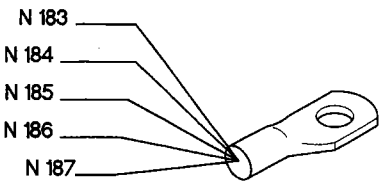

188 Timing variator

1998

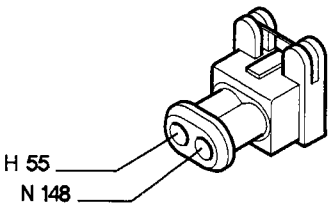

P4F426N01

4F177N

190 Electronic ignition/fuel injection control unit

1998

1	V 183	17	R 162	37	NZ n.d.
2	N 148	18	RV n.d.	38	MB 187
3	FIN 151	19	N n.d.	39	SN 185
4	AN 166	20	B 184	40	S 55
5	ZB 55B	21	CL 186	41	B 55
6	L 55	22	C 166	42	N 148
7	AV 167	24	BN 148	45	VG 157
8	N 168	27	C n.d.	47	GV 55A
9	MG n.d.	28	B 141	48	L 144
10	M 141	29	L 136A	49	LN 144
11	N 136	30	GR n.d.	51	LN 55
12	NB n.d.	32	LR 55	52	BC 55
14	N 148	34	HV 165A	53	AR 146
15	SB 164	35	AG 165	54	M 192
16	H 163	36	S 150	55	BR 139

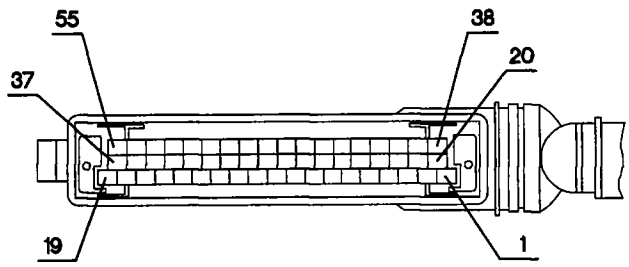

191 Timing variator relay

1998

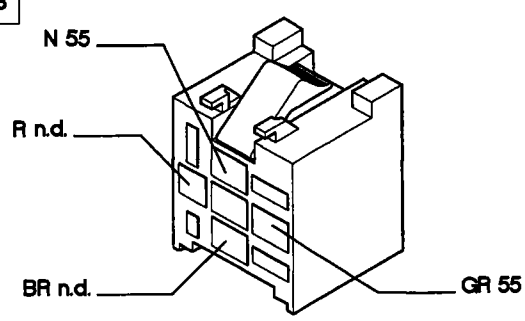

192 Air temperature sensor

1581
1998

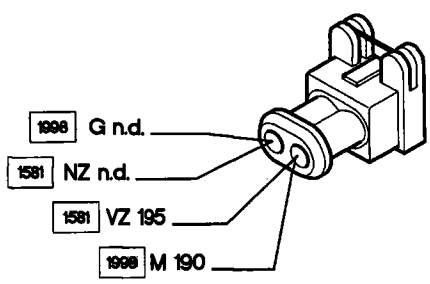

192 Air temperature sensor

1910-100

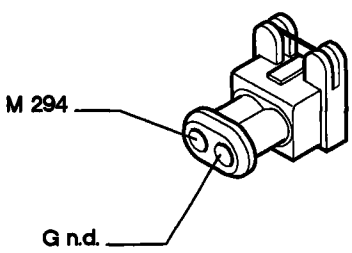

193 Earth for electronic injection

1581

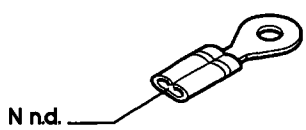

4F176N

P4F427N02

55.

194 Fuel injection/injector flange cables connection

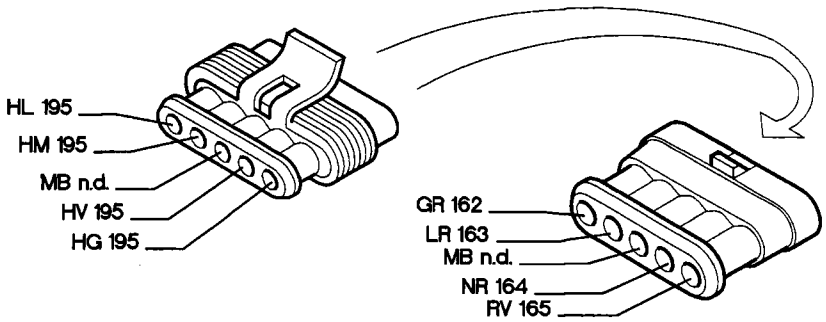

195 Electronic ignition/fuel injection control unit

1581

1	HM 194	21	HZ 138	39	HV 194
2	HG 194	22	N 141	40	GZ 138
3	MZ 138	23	BZ 146	42	L 55
4	G 141	24	SG 55B	44	BG 252
5	CN 252	26	LR 55	47	VB 157
7	ZB 196	28	HR n.d.	43	GV 55A
9	LN 55	29	VZ 192	49	R 144
10	S 55	30	B 144	50	LB 252
11	LN 168	31	BR 139	52	Z 196
12	AB 139	32	CB 252	53	NG n.d.
13	C n.d.	34	SN 197	54	NZ 148
14	AG 197	35	RB 196	55	BN 155
16	A n.d.	36	NZ 148		
17	N n.d.	37	BV 155		
20	RZ 138	38	HL 194		

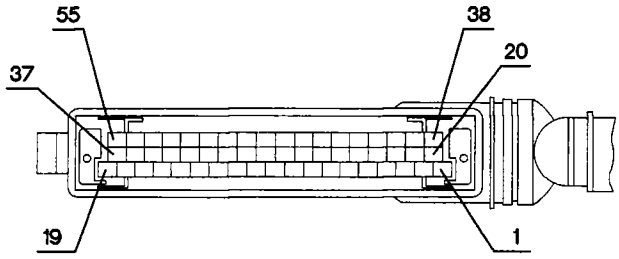

196 Multiple reiay

1581

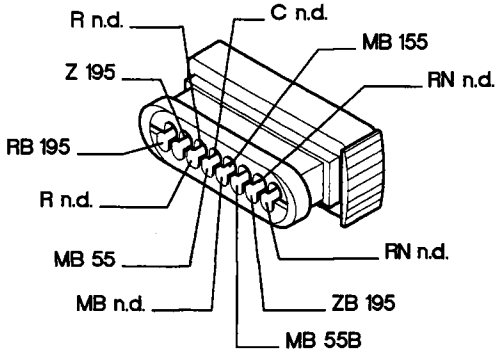

P4F428N01

4F179N

197 Absolute pressure sensor

1581

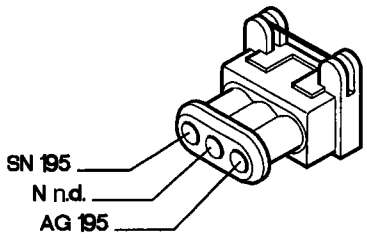

198 Ignition/fuel injection control unit fuse

1581

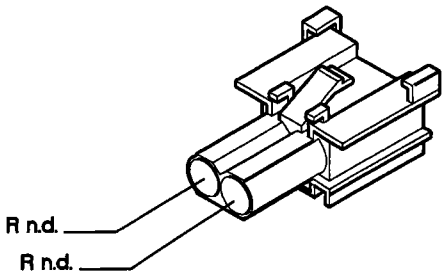

200 Electrostop relay (TD)

1910

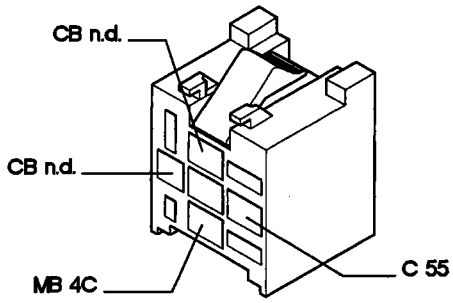

2387

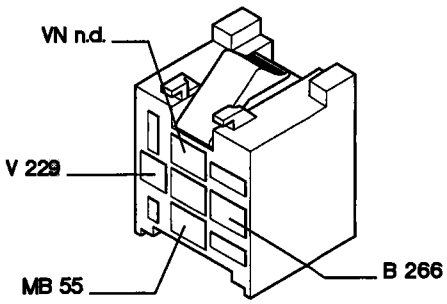

201 A Heater plug control unit (TD)

TD

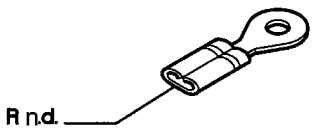

201 B Heater plug control unit (TD)

1910-75

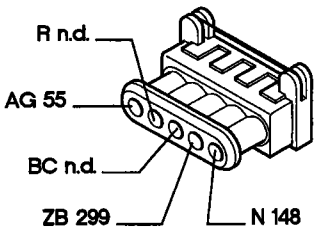

1910-100

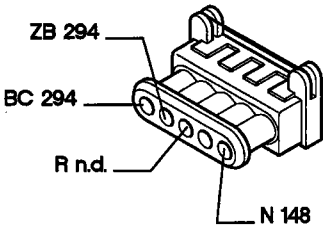

2387

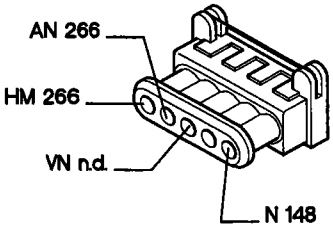

P4F429N02

4F180N

55.

201 C Heater plug control unit (TD)

1910-75
1910-100

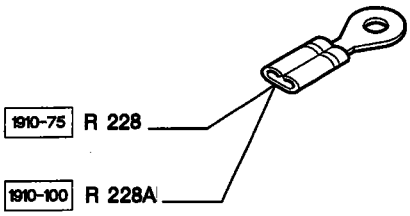

201 D Heater plug control unit (TD)

1910-100

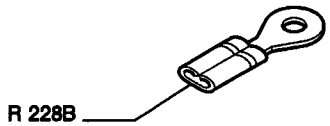

202 Heater/air conditioner symbol illumination bulb

AUTO

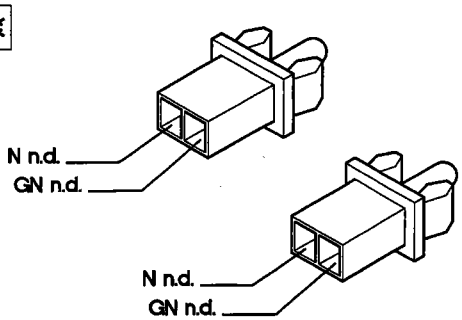

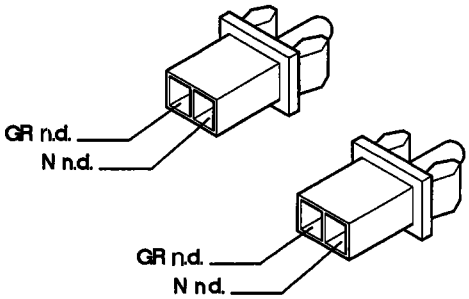

206 Car interior climate control fan

AUTO

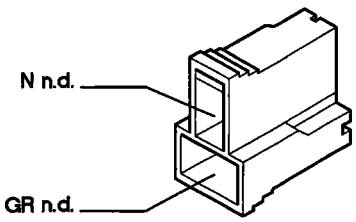

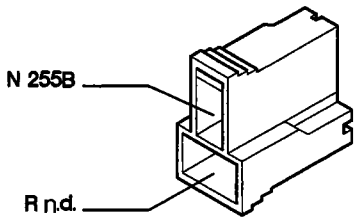

207 Electric fan speed adjustment switch

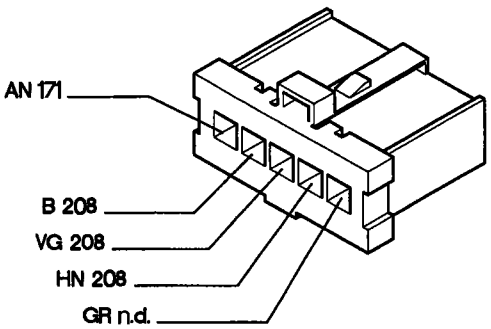

P4F430N02

4F181N

208 Fan speed resistor

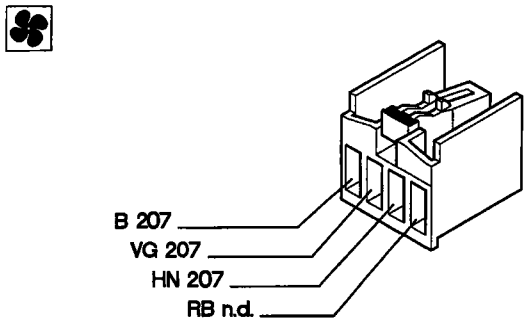

209 air intake flap actuator

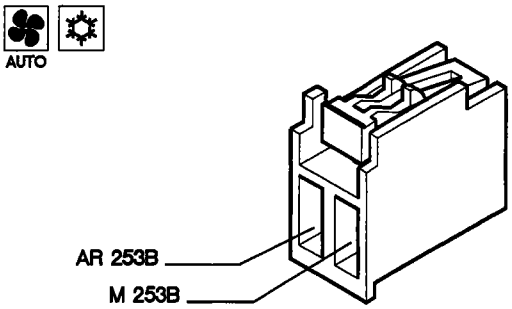

211 Anti-frost sensor

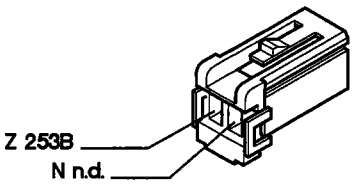

212 Engine cooling fan relay (1747)

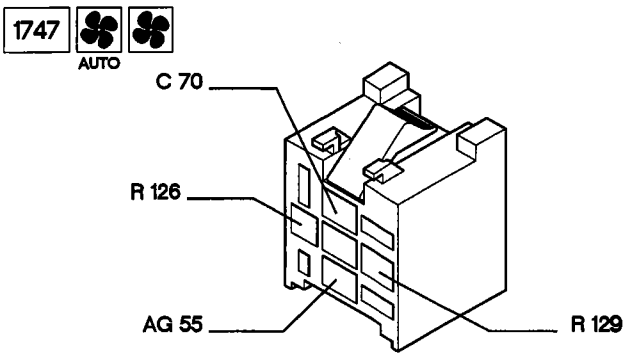

222 Earth for climate control system

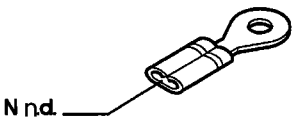

223 Rpm sensor (TD)

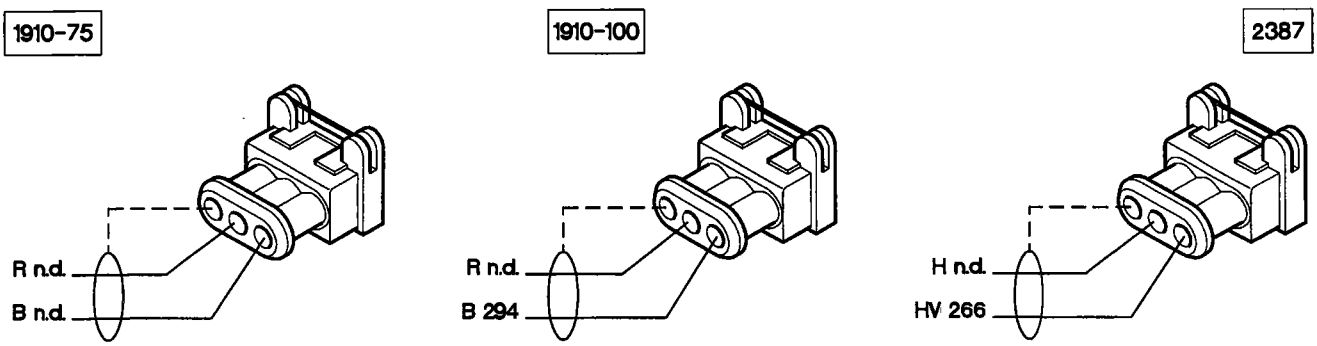

P4F451N01

4F206N

55.

224 Instrumented injector (TD)

1910-100
2387

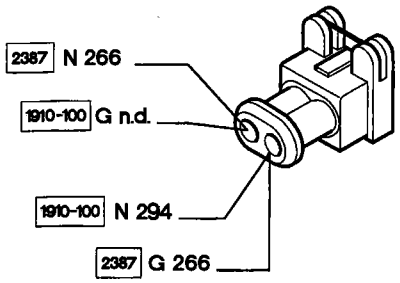

226 Diagnostic socket for Fiat CODE system (1910TD)

1910

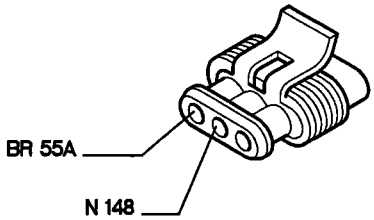

228 Heater plugs (TD)

1910-75
1910-100

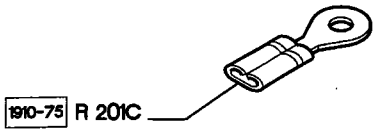

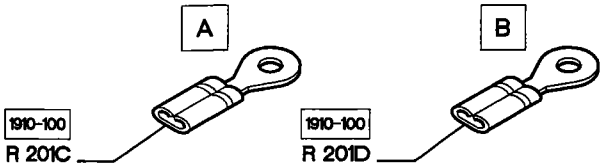

229 Engine cut-out electrostop (TD)

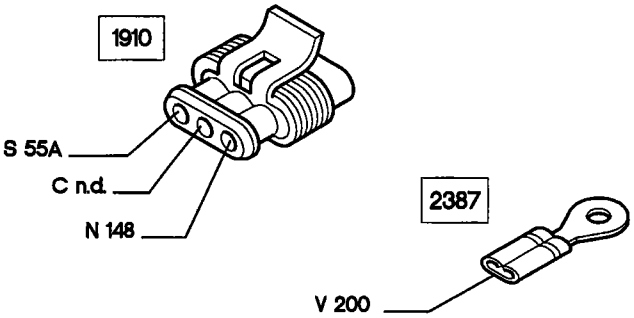

231 Clock spring connection

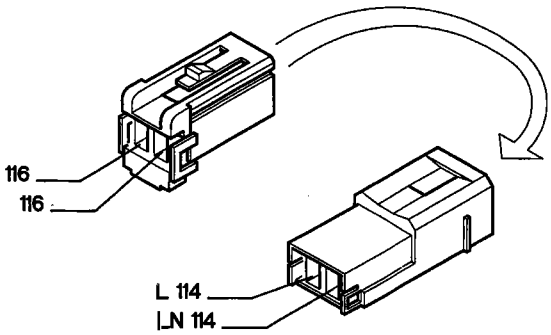

232 Compressor earth

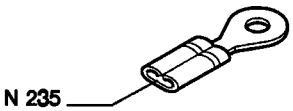

233 Thermostat on coolant pump (1910T-D-75)

1910-75

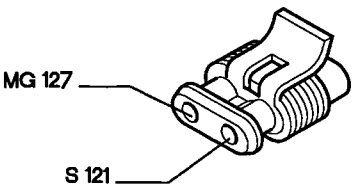

234 Door mirror defrost fuse

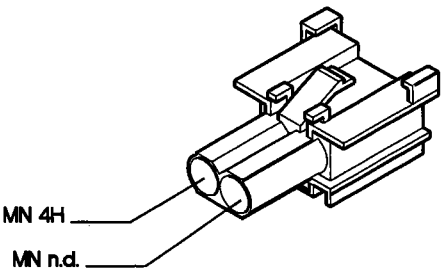

4F207N

P4F452N01

235 Air conditioner compressor cables connection

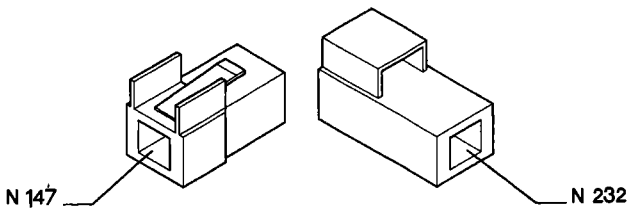

236A Rear cable/tailgate connection

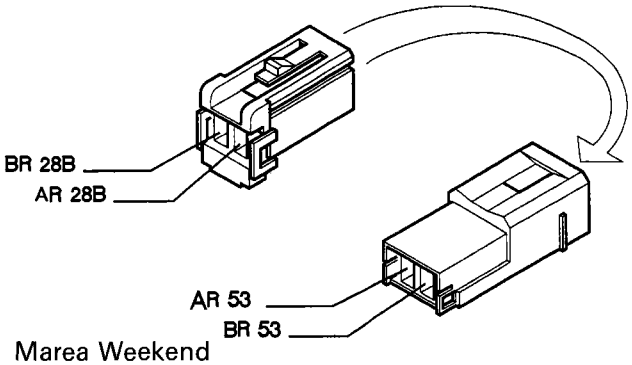

Marea Weekend

236B Rear cable/tailgate connection

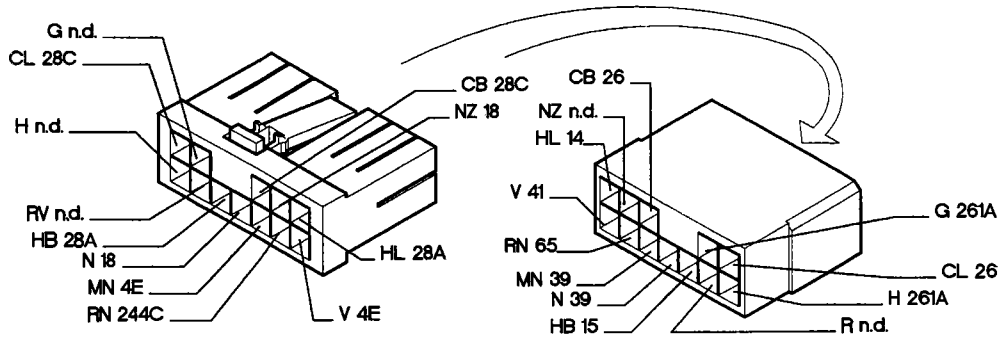

Marea Weekend - with Check Panel

236B Rear cable/tailgate connection

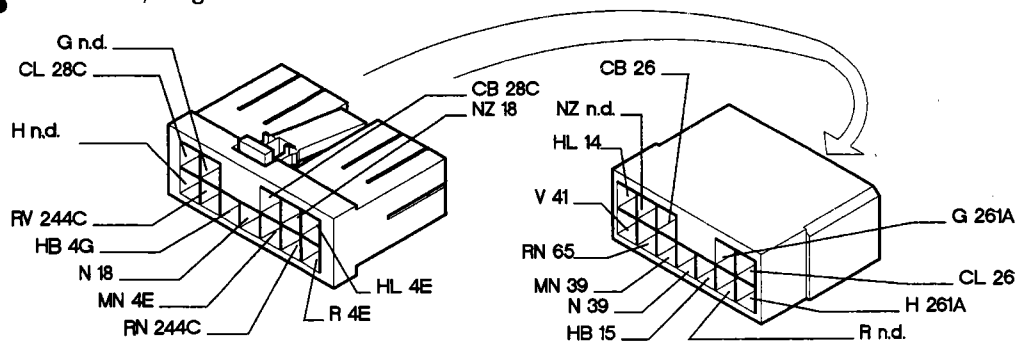

Marea Weekend - without Check Panel

237 Fiat CODE fuse

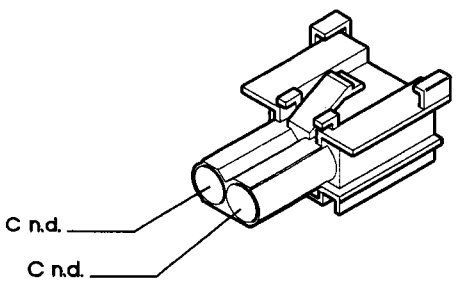

238A Electric rear windows control unit

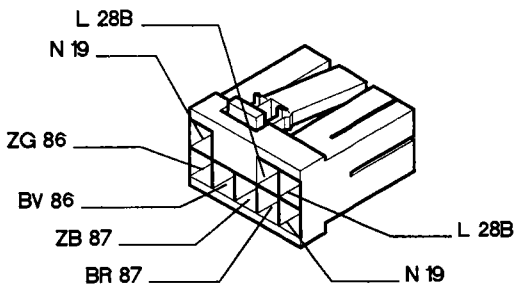

P4F431N01

4F182N

Copyright Fiat Auto

55.

238B Bear electric windows control unit

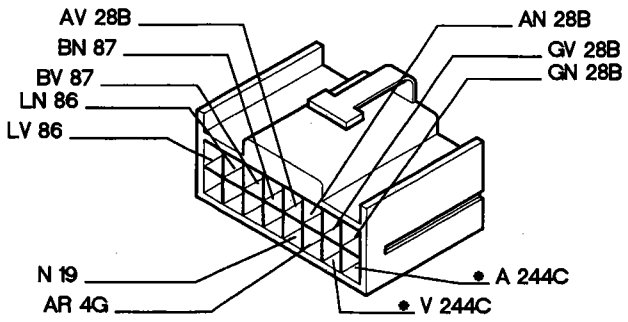

* With automatic window closure

239 Air Bag cable/left pretensioner cable connections

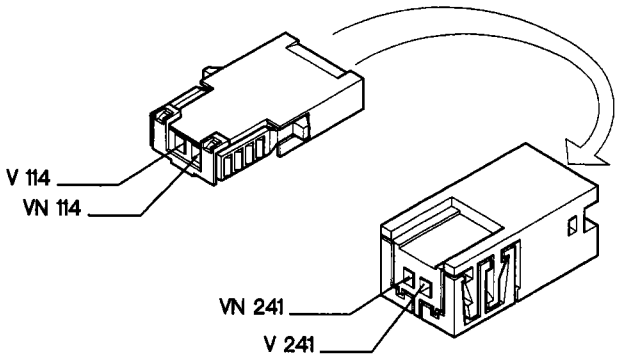

240 Air Bag cable/right pretensioner cable connection

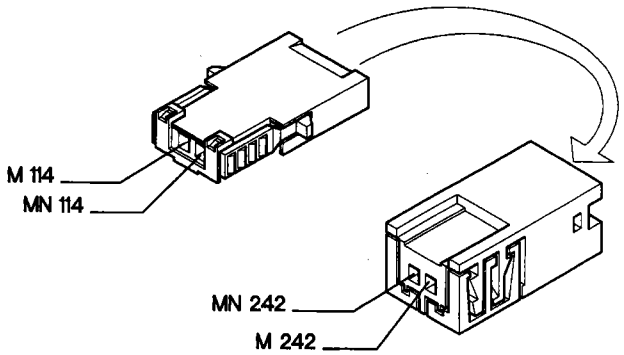

241 Left pretensioner

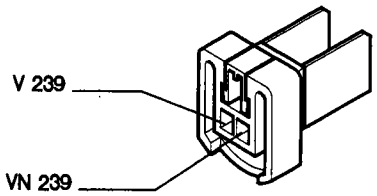

242 Right pretensioner

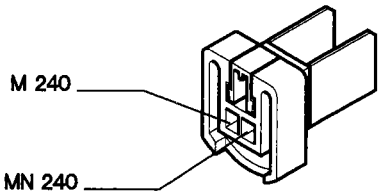

243 Luggage compartment light button

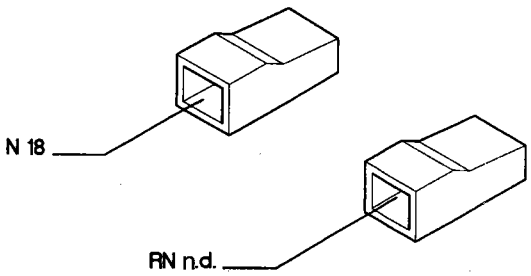

Marea

243 Luggage compartment light button

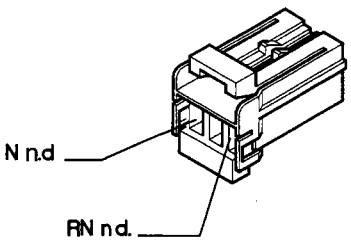

Marea Weekend

4F183N

P4F432N01

244A Integrated services electronic control unit

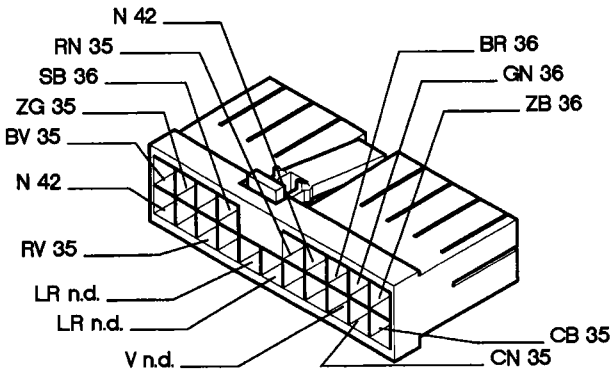

244B Integrated services electronic control unit

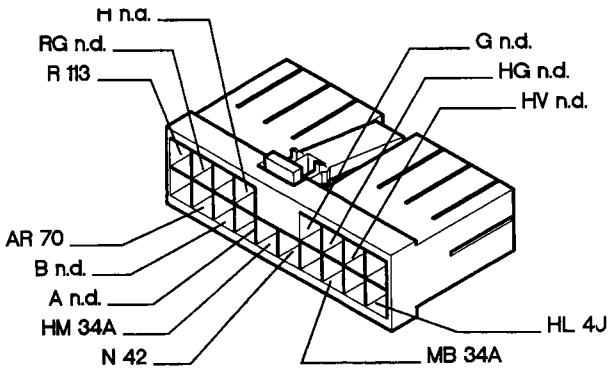

244C Integrated services electronic control unit

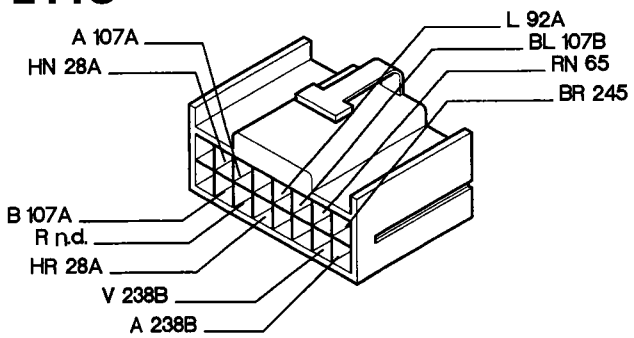

Marea - with Check Panel

244C Integrated services electronic control unit

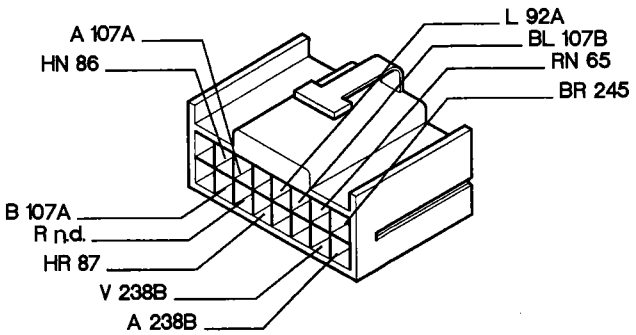

Marea - without Check Panel

244C Integrated services electronic control unit

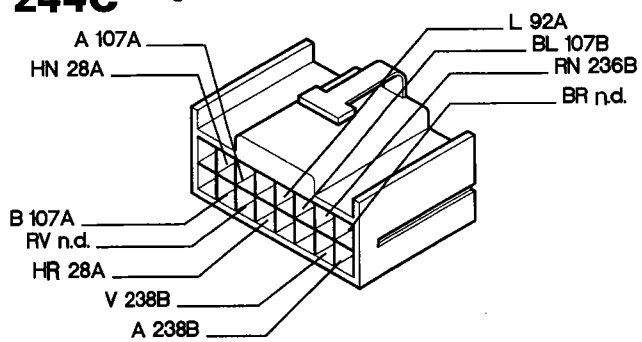

Marea Weekend - with Check Panel

244C Integrated services electronic control unit

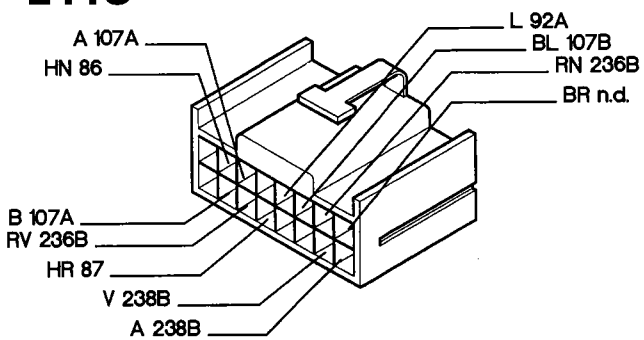

Marea Weekend - without Check Panel

245 Rear courtesy light

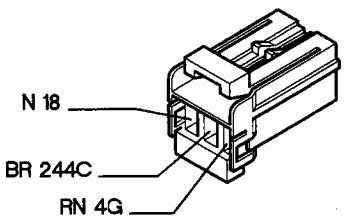

Marea

P4F433N01

4F184N

55.

247 Lambda probe fuse

1370

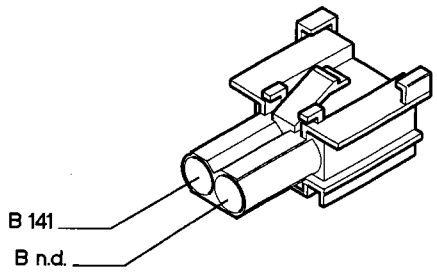

1998

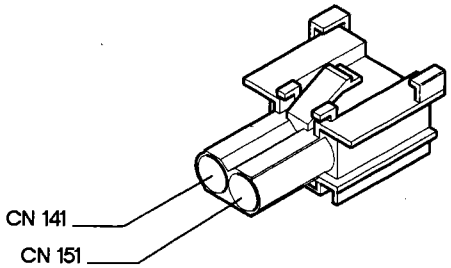

248 Radio controls on steering wheel

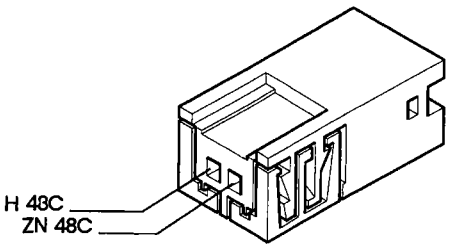

249 Diagnostic socket for climate control system

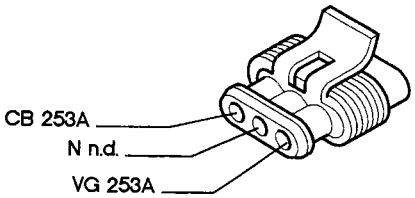

250 Fuel pump fuse

1370

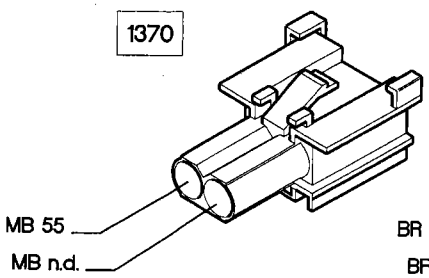

1747

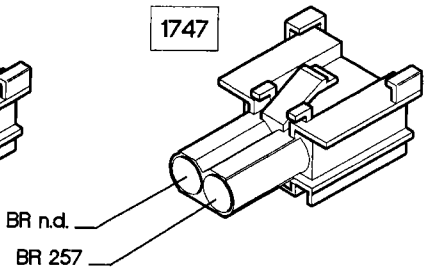

1998

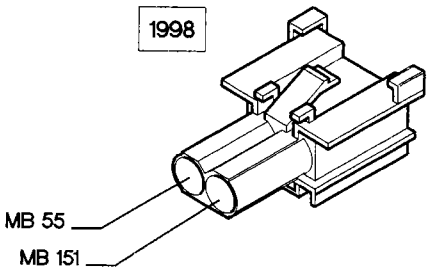

252 Auto transmission/engine cables connection

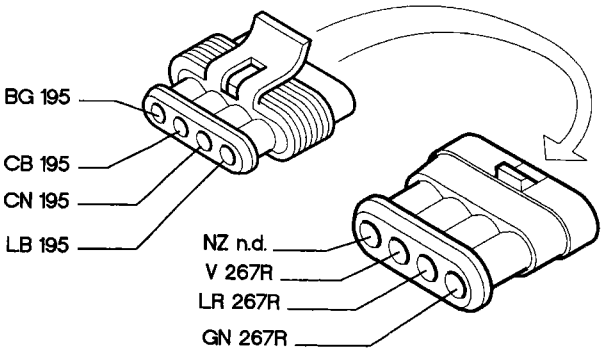

253A Climate control system control unit

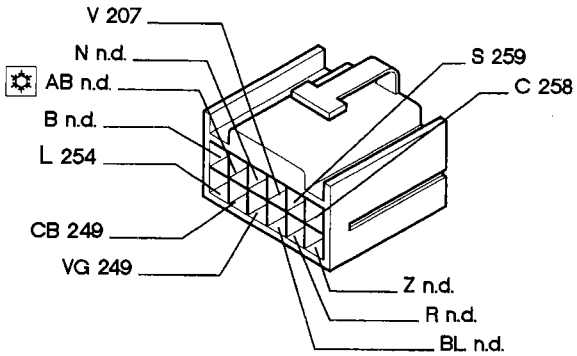

4F185N

P4F434N01

258B Climate control system control unit

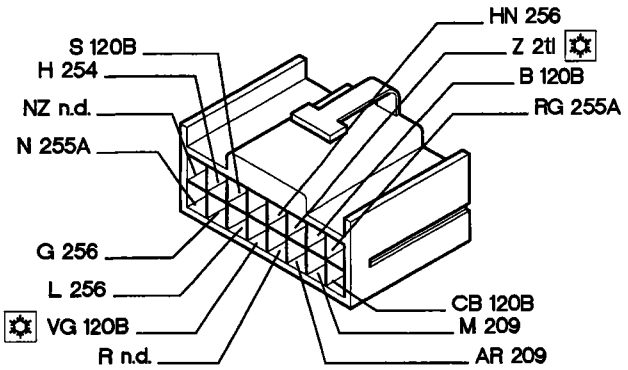

254 Climate system controls with car interior temperature sensor

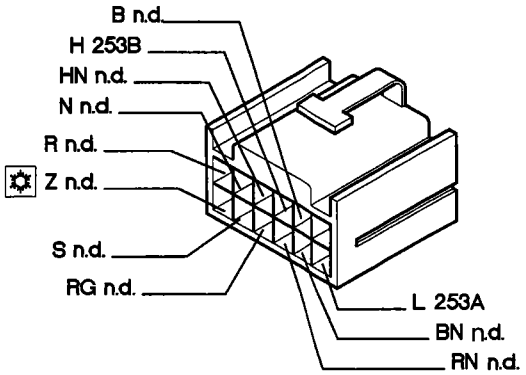

255 Electronic speed variator for climate control fan

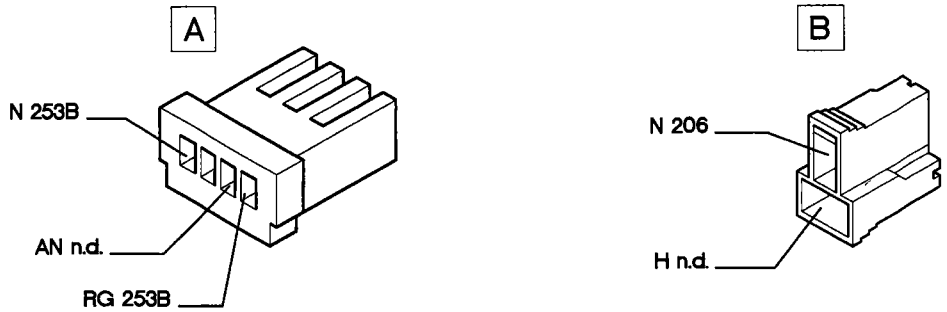

256 Air mixing control actuator

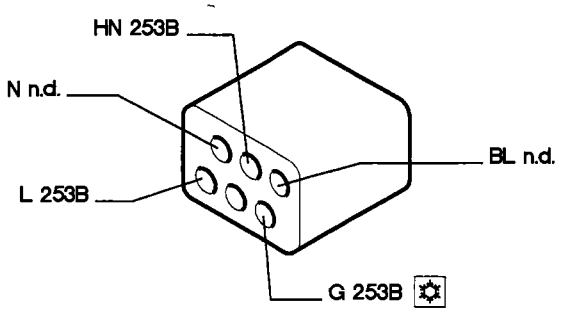

257 Fuel purnp relay

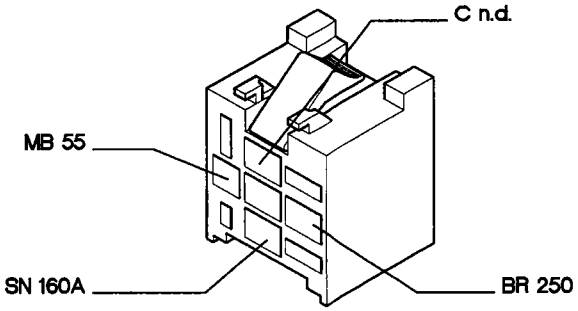

258 Treated air temperature sensor

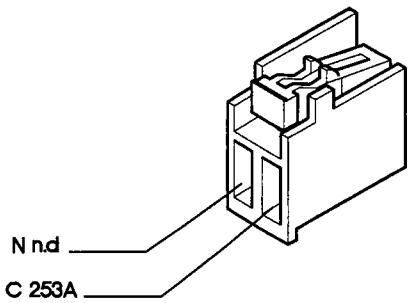

259 Required temperature adjustment switch

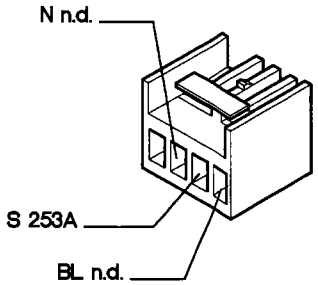

4F186N

P4F435N01

Copyright Fiat Auto

55.

260 "MAX-DEF" microswitch

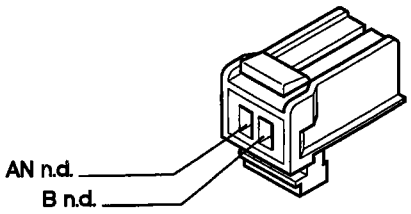

261 Tailgage lock-unlock actuator

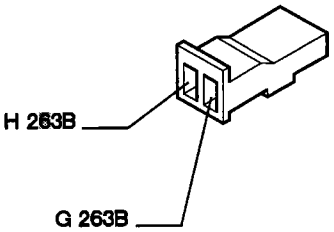

262 Seat belt warning light switch

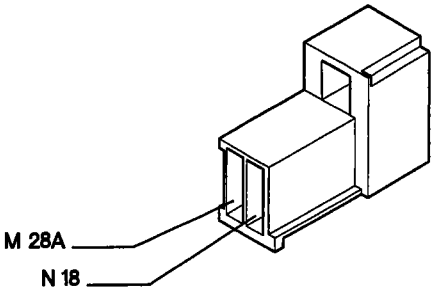

263 Heated seats fuse

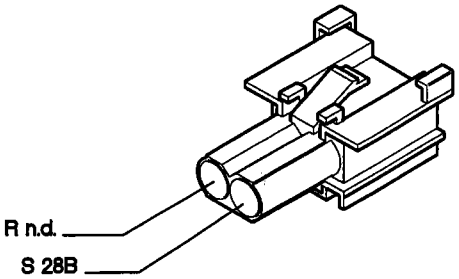

264 Rear left courtesy light

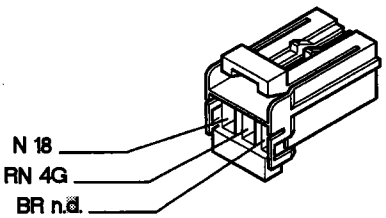

Marea Weekend

Marea Weekend

265 Rear right courtestsy light

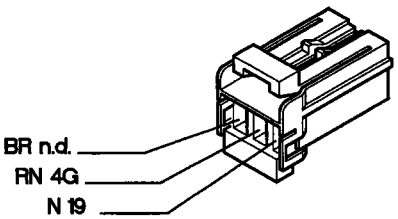

P4F436N02

4F187N

266 Fuel injection electronic control unit (2387TD)

2387

1	A n.d.	17	R n.d.	41	HM 201
2	A n.d.	18	N 148	42	HV 55
3	B 200	19	N n.d.	44	V 55
4	CN 55	21	AV 286	47	HV 223
5	G 224	25	BL 55A	50	AR 55
6	M 285	26	RN 55A	52	HR 167
8	AN 201	27	AB 139	53	SN 157
9	NZ 55	28	LG 55A	55	VN n.d.
10	AG 287	29	MG n.d.		
11	CL 55	33	ZB 55A		
12	N 224	34	HL 167		
13	H n.d.	35	MN 286		
14	AC 286	37	VB 55A		
15	NZ 288	38	LN 167		
16	R n.d.	39	C 286		

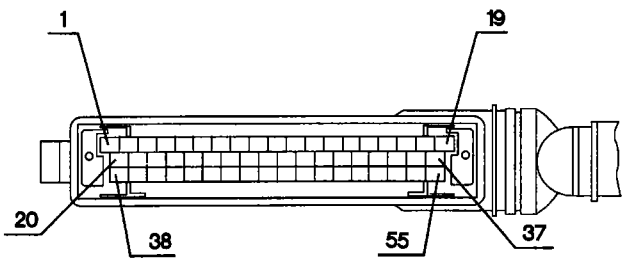

267L Automatic transmission control unit

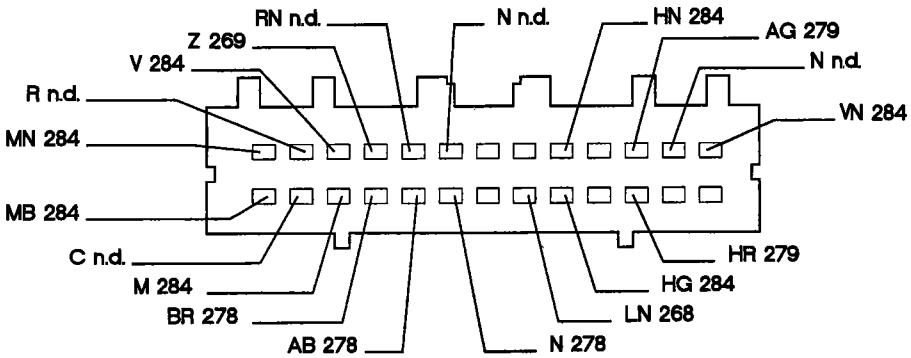

267R Automatic transmission control unit

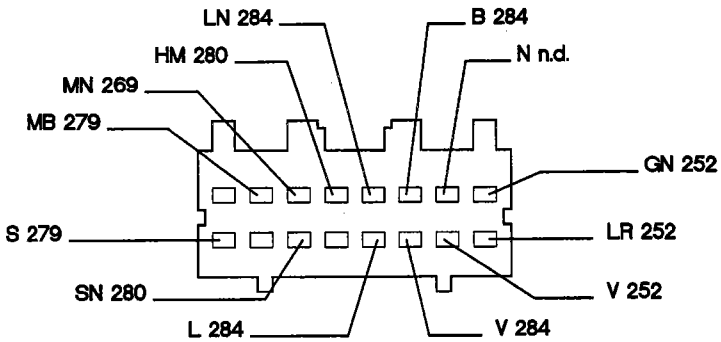

P4F437N01

4F188N

55.

268 Front/auto transmission cables connection

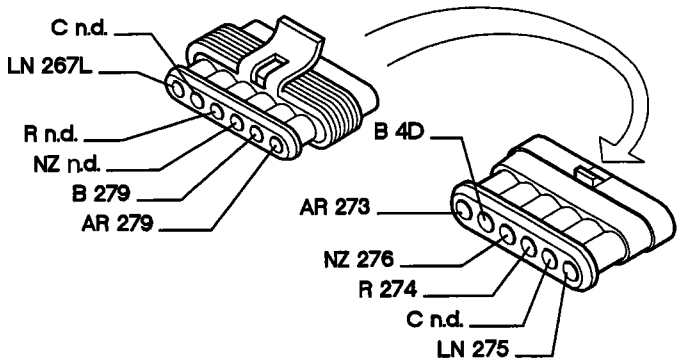

269 Dashboard/auto transmission cables connection

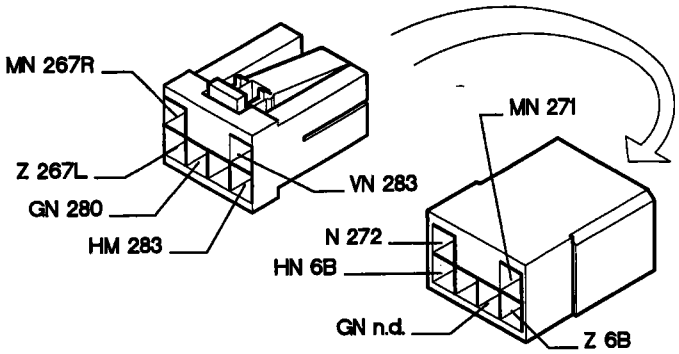

270 Rear/auto transmission cables connection

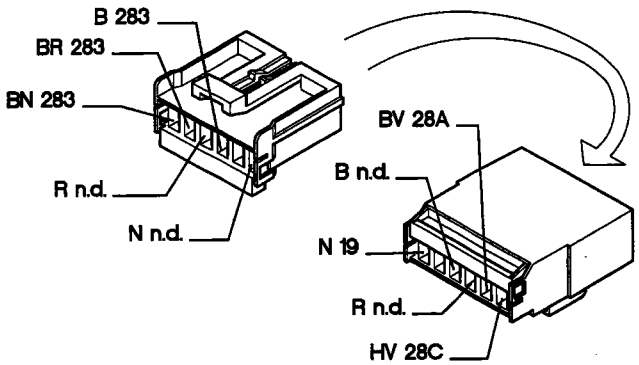

271 Kick-down switch

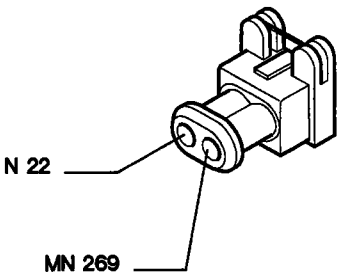

272 Ignition switch solenoid

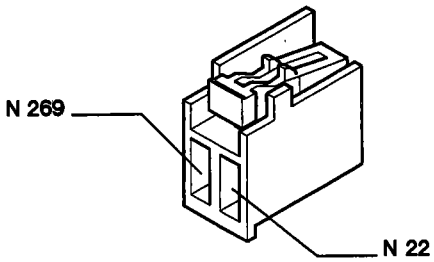

273 Auto transmission fuse

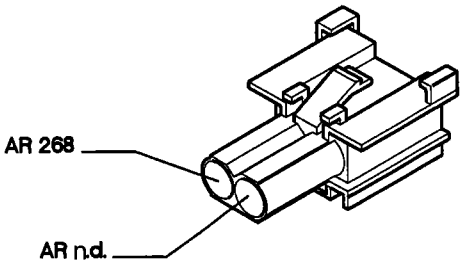

4F189N

P4F438N02

274 Auto transmission fuse

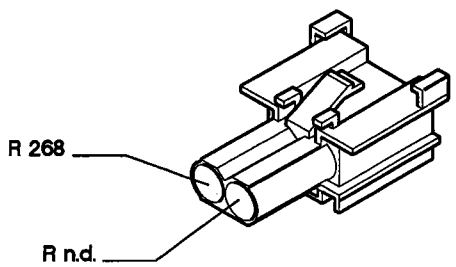

275 Auto transmission oil radiator fan relay

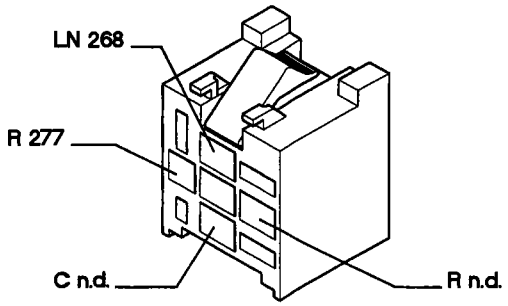

276 Starter enablement relay

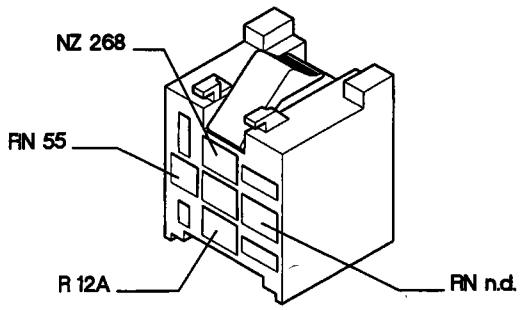

277 Auto transmission oil radiator fan

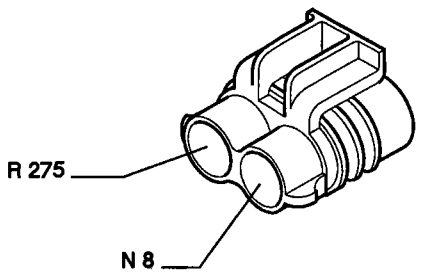

278 Diagnostic socket for auto transmission

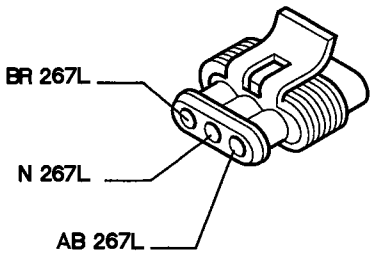

279 Auto transmission gear selector

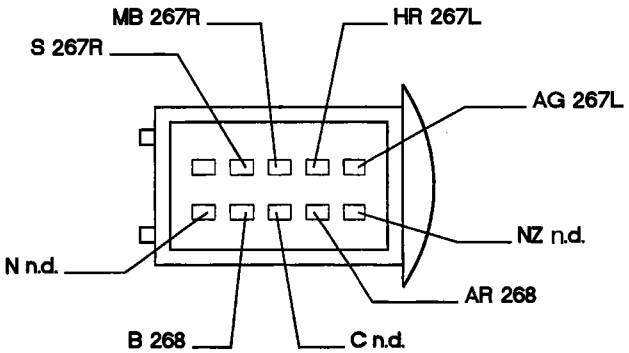

280 ICE/SPORT selector for auto transmission

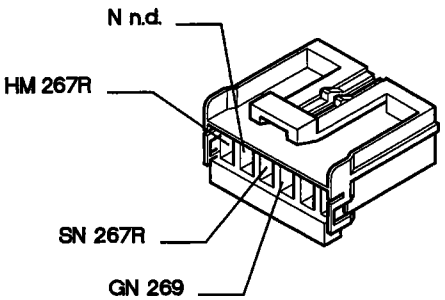

281 Shift Lock solenoid

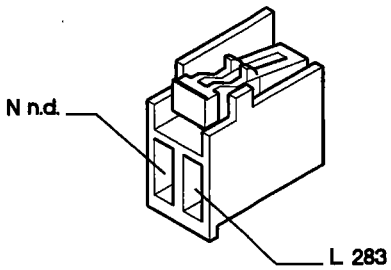

P4F439N02

55.

282 Additional PARK switch for automatic transmission

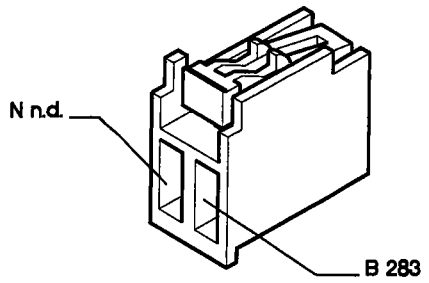

283 Auto transmission safety control unit

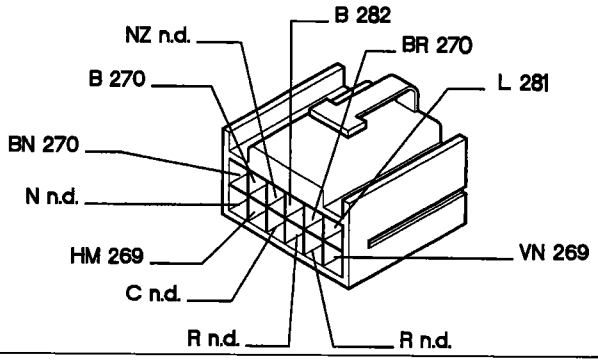

284 Auto transmission connection on gearbox

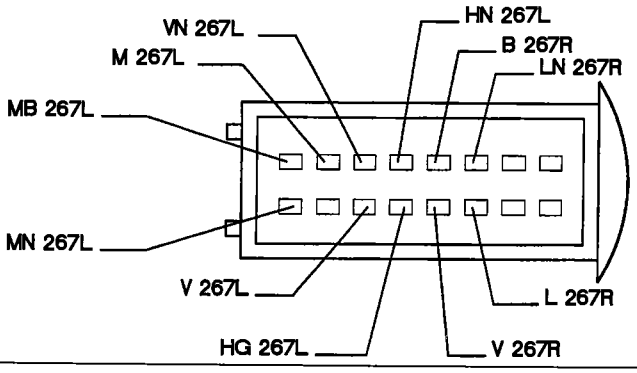

285 E.G.R. control solenoid (TD)

1910-75

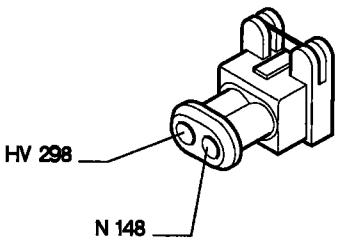

1910-100

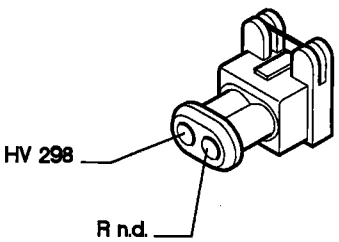

2387

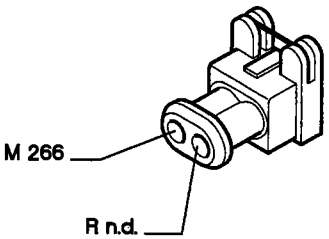

286 Diesel pump (2387TD)

2387

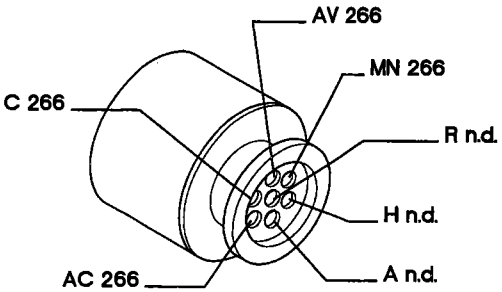

287 Solenoid on diesel pump for advance (TD)

1910-100

2387

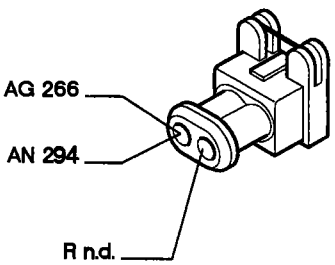

4F208N

P4F440N01

288 Electronic fuel injection relay (TD)

1910-100

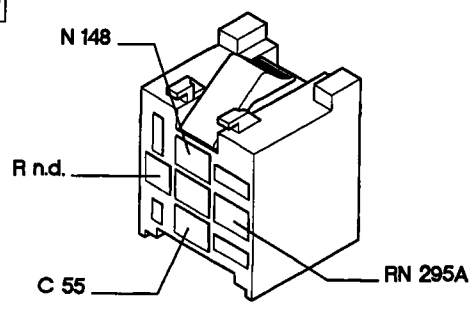

2387

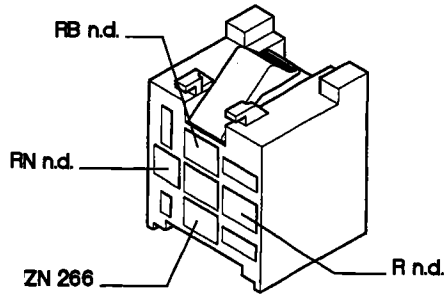

289 PCT thermal contact (TD)

1910

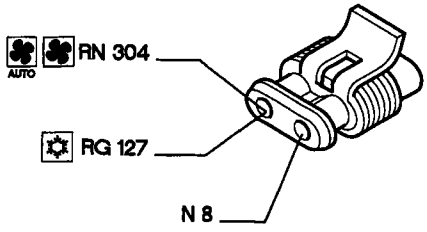

2387

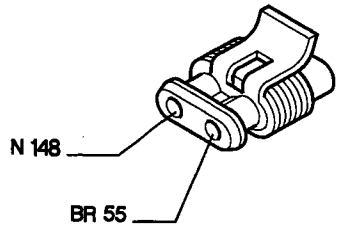

290 PCT heater resistor (TD)

1910

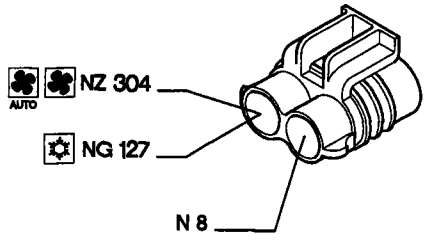

2387

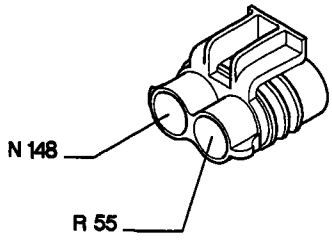

291 Potentiometer on accelerator pedal (2387TD)

2387

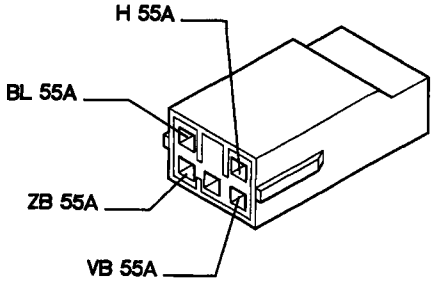

292 Clutch pedal switch (2387TD)

2387

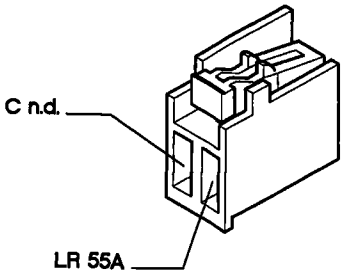

P4F441N01

4F209N

293 Air cleaner clogged indicator sensor (2387TD)

2387

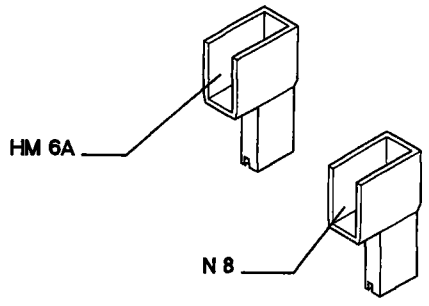

294 Electronic fuel injection control unit (1910TD-100)

1910-100

1	R n.d.	9	AG 55	19	S 55
2	NL 148	11	B 55	21	NZ n.d.
3	G n.d.	12	BC 201B	22	AV 167
4	AR 296	13	BR 139	23	V 296
5	HV 285	14	ZB 201B	24	M 192
6	AN 287	15	L 55	25	VG 157
7	N 224	16	SB 297		
8	B 223	18	LN 55		

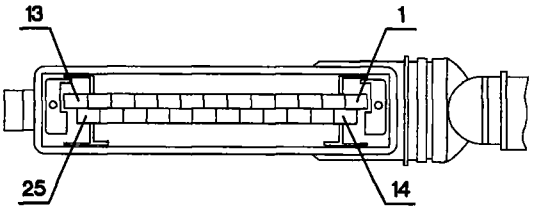

295A Fuel injection fuse (1910TD-100)

1910-100

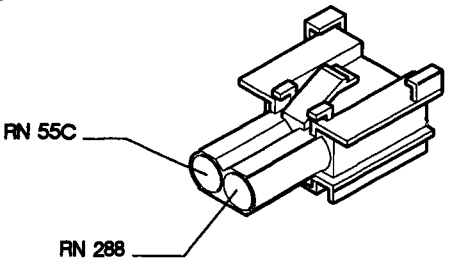

295B Fuel injection fuse (1910TD-100)

1910-100

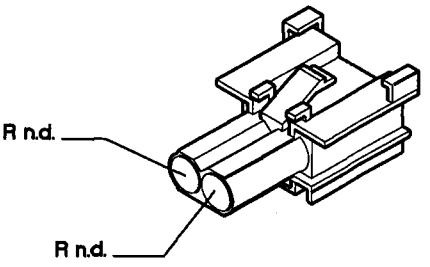

296 Throttle lever control potentiometer (1910TD)

1910-75

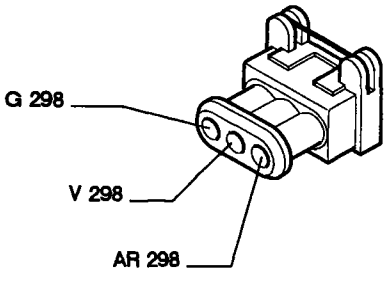

1910-100

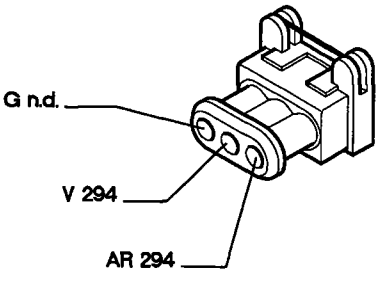

P4F442N01

4F210N

297 Fast idle solenoid (1910TD -100)

1910-100

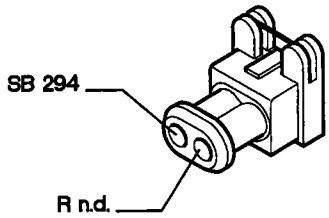

298 E.G.R. electronic control unit (1910TD-75)

1910-75

1	R n.d.	7	C n.d.
2	B n.d.	8	AR 296
3	BR 229	9	N 148
4	VG 157	10	MG 55
5	V 296	11	HV 285
6	G 296		

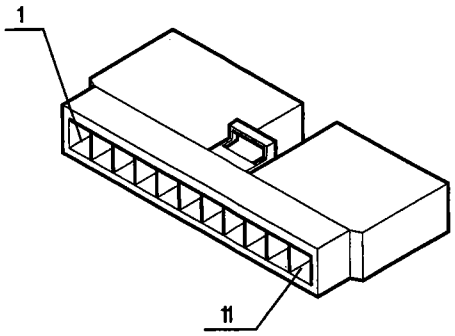

299 Water temperature sensor (preheating) (1910TD-75)

1910-75

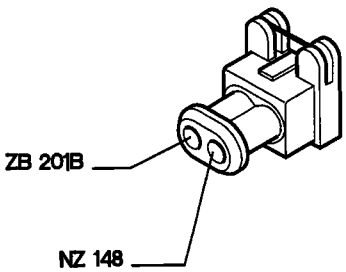

300 KSB thermal switch (1910TD-75)

1910-75

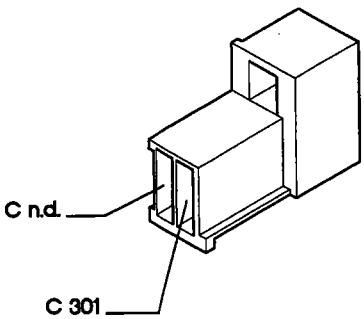

301 KSB device (1910TD-75)

1910-75

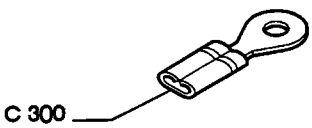

302 Diagnostic socket for E.G.R. system (1910TD-75)

1910-75

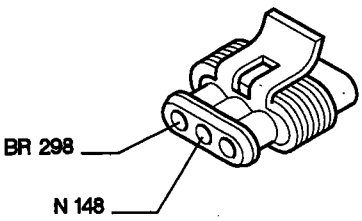

P4F443N01

4F211N

55.

303 Diesel preheating fuse (TD)

TD

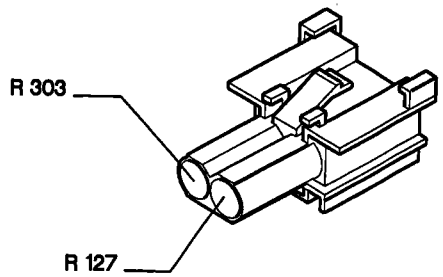

304 Diesel preheating relay (TD)

TD

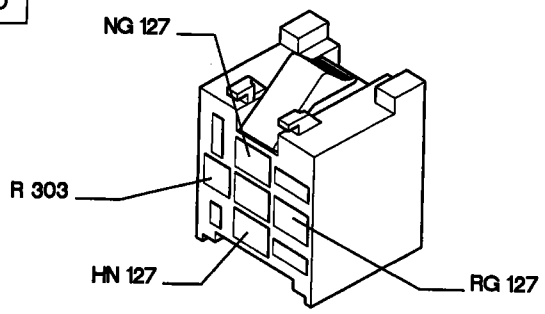

305 Compressor disconnection relay (1910TD-75)

1910-75

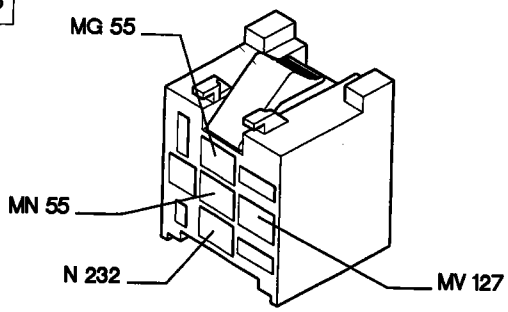

TD

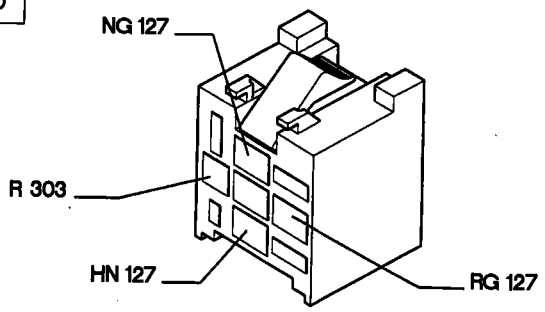

P4F444N01

4F191N

Key to components

1 Front left lights cluster
2 Front right lights cluster
3 Power fuse box
4 Fuse and relay unit:
E1 Ignition switch discharge relay
E2 Horn relay

E3 Heated rear window relay
5 Dipped beam relay
6 Instrument panel:
A Auto transmission fault warning light
B Air Bag fault warning light
C Side lights warning light
D Main beam headlamps warning light
E Air cleaner clogged warning light
F Fuel injection fault warning light
G Low generator recharging warning light

H Low engine oil pressure warning light

I Seat belt warning light
J Handbrake on/low brake fluid warning light

K Brake pad wear warning light
L Fiat CODE fault warning light
M ABS fault warning light (ABS)

N Maximum turbocharging pressure warning light
O Heater plug warning light
P Trailer lights warning light
7 Stalk unit:
A Windscreen wiper speed switch
B Windscreen/headlamps/rear window wash switch
C Rear window wiper switch
D Flasher button
E Dipped/main beam headlamps switch

F Side lights switch
G Indicators/hazard lights intermittent switch
H Direction indicators switch
I Horn button
8 Front left earth
9 Front right earth
10 Battery earth on engine
10A Battery earth on body shell
11 Battery
12 Ignition switch
13 Front right/left cables connection
14 Left number plate light bulb
15 Right number plate light bulb
16 Rear left lights cluster
17 Rear right lights cluster
18 Rear left earth
19 Rear right earth
20 Front left side repeater
21 Front right side repeater
22 Left dashboard earth
23 Hazard lights switch unit
A Hazard lights warning lamp
B Hazard lights switch
24 Windscreen wiper motor
25 Windscreen/rear window wash pump
26 Rear window wiper motor
28 Dashboard/rear cables connection
29 Front/fog lights cables connection
30 Front left fog lamp
31 Front right fog lamp
32 Front fog lamps relay
33 Front fog lamps fuse
34 Switch unit:
A Alarm on warning light
B Rear fog lamp switch
C Rear fog lamp relay
D Rear fog lamp warning light
E Heated rear window switch
F Heated rear window warning light
G Switch unit illumination symbol light

H Front fog lamps warning light
I Front fog lamps switch
35 Dashboard/front left door cables connection

36 Dashboard/front right door cables connection
39 Heated rear window
40 Stop lights switch
41 Additional stop light
42 Right dashboard earth
43 Left headlamp adjustment motor

44 Right headlamp adjustment motor

45 Headlamp adjustment device

46 Low tone left horn

47 High tone right horn
48 Radio with clock
49 Front left loudspeaker (tweeter)
50 Front right loudspeaker (tweeter)
51 Loudspeaker on front left door
52 Loudspeaker on front right door
53 Rear left loudspeaker
54 Rear right loudspeaker
55 Front left/engine cables connection
55A Front left/engine cables connection
55B Front right/engine cables connection
55C Front left/engine cables connection
56 Fuel gauge sender unit

A Fuel level sensor
B Electric fuel pump
57 Inertial switch
58 Instrument panel illumination brightness adjustment rheostat
63 Thermostat on radiator
64 Glove compartment light bulb with built-in switch
65 Luggage compartment light bulb
66 Pushbutton unit for electrically-adjustable door mirrors
67 Left door mirror

68 Right door mirror
69 Cigarette lighter
70 Dashboard/front cables connection
72 Electric front windows fuse

73 Pushbutton unit for electric front windows on left armrest
74 Pushbutton unit for front right electric window on right armrest
76 Front left window motor
77 Front right window motor
78 Pushbutton unit for electric rear windows on front left door
80 Electric rear windows inhibition switch

81 Fuse protecting electric rear windows

82 Pushbutton unit for rear left electric window on rear left door
83 Rear right window pushbutton unit on rear right door
84 Rear left window motor
85 Rear right window motor
86 Rear/rear left door cables connection

87 Rear/rear right door cables connection

88 Low brake fluid level sensor
89 Left brake pad wear sensor
89A Left brake pad wear sensor cables connection
90 Handbrake on warning light switch

91 Key-dependent power relay
92 Electric sunroof fuse
92A Electric sunroof cables connection
93A Electric sunroof control unit
94 A.B.S. fuse

95 Front/A.B.S. cables connection

96 A.B.S. power fuse

97 Headlamp washer pump
98 Headlamp washer intermittent switch
99 Headlamp washer fuse

100 Alarm electronic control unit

103 Diagnostic socket for alarm
105 Switch for switching off alarm

106 Alarm switch on bonnet

107A Door lock remote control receiver
107B Front courtesy light

108 Rear left door lock
109 Rear right door lock
110 Front left door lock
111 Front right door lock
113 Central door locking fuse
114 Air Bag electronic control unit
115 Passenger's Air Bag
116 Driver's Air Bag
117 Air Bag/dashboard cables connection
120 Air conditioner cables connection
121 Three-stage pressure switch
122 Engine cooling fan low speed relay

123 Engine cooling fan high speed timer

123A Engine cooling fan high speed relay

124 Air conditioner compressor relay

126 Front/radiator cables connection
127 Front left cable/relay bracket mounting cables connection
128 Front/radiator cables connection
129 Engine cooling fan power fuse

129A 2nd engine cooling fan power relay

130 Diagnostic socket for Air Bag
131 Fiat CODE electronic control unit
132 Petrol vapour cut-off solenoid (canister)

133 Air Bag fuse
134 Rear cables/driver's heated seat cables connection
134A Driver's seat heating pad
135 Rear cables/passenger's heated seat cables connection
135A Passenger's seat heating pad
136 Knock sensor
136A Knock sensor (1998)
137 Car speed sensor
138 Idle adjustment motor (1370-1581)

139 Diagnostic socket for fuel injection
140 Fuel injection/ignition control unit (1370)

141 Heated Lambda probe
142 Low oil pressure warning light switch

143 Alternator
144 Rpm and T.D.C. sensor
145 Starter motor
146 Potentiometer on throttle valve
147 Compressor for air conditioner
148 Earth for electronic injection
149 Instrumented injector (1370)
150 Fuel injection relay (1370-1747-1998)

151 Relay for Lambda probe, electric fuel pump, fuel injectors (1370-1998)

152 Fuel injection fuse (1581)(1747)

154 Engine cooling fan
154A Engine cooling fan
155 Ignition coils assembly (1370-1581)

156 Spark plugs
157 Water temperature sensor for fuel injection

158 Instrument water temperature sensor
159 Reversing lights switch
160 Electronic ignition/fuel injection control unit (1747)
161 Ignition power module (1747)
162 Fuel injector (1st)
163 Fuel injector (2nd)
164 Fuel injector (3rd)
165 Fuel injector (4th)
165A Fuel injector (5th) (1998)
166 Idle adjustment actuator (1747-1998)
167 Air flowmeter
168 Timing sensor
170 Engine cooling fan resistor

171 Heater cables connections
172 Two-stage thermostat
174 Power earth for anti-lock braking system (A.B.S.)
176 Diagnostic socket for anti-lock braking system (A.B.S.)
177 Sensor on front left wheel for anti-lock braking system (A.B.S.)
178 Sensor on rear left wheel for anti-lock braking system (A.B.S.)
179 Sensor on front right wheel for anti-lock braking system (A.B.S.)
180 Sensor on rear right wheel for anti-lock braking system (A.B.S.)
181 Electrohydraulic control unit for anti-lock braking system (A.B.S.)
182 Right brake pad wear sensor

182A Right brake pad wear sensor cables connection
183 Ignition coil (1st) (1998)
184 Ignition coil (2nd) (1998)
185 Ignition coil (3rd) (1998)
186 Ignition coil (4th) (1998)
187 Ignition coil (5th) (1998)
188 Ignition coil earth (1998)
189 Timing variator (1998)
190 Electronic ignition/fuel injection control unit (1998)
191 Timing variator relay (1998)

192 Air temperature sensor
193 Earth for electronic fuel injection (1581)
194 Fuel injection/injector flange cables connection (1581)
195 Electronic ignition/fuel injection control unit (1581)
196 Multiple relay (1581)
197 Absolute pressure sensor (1581)
198 Ignition/fuel injection control unit fuse (1581)
199 Fiat CODE aerial
200 Electrostop relay (TD)
201 Heater plug control unit (TD)
202 Heater/air conditioner symbol illumination bulbs
206 Car interior climiate control fan

207 Fan speed adjustment switch

208 Fan speed resistor
209 Air intake flap actuator
211 Anti-frost sensor
212 Engine cooling fan relay (1747)

222 Earth for climate control system
223 Rpm sensor (2387)
224 Instrumented fuel injector (2387)
226 Diagnostic socket for Fiat CODE system (1910 TD)
227 Diagnostic socket for fuel injectioni (1747)

228 Heater plugs (TD)
229 Engine cut-out electrostop (TD)
231 Clock spring connection
232 Earth for compressor
233 Thermostat on coolant pump (1910TD-75)

234 Door mirror anti-frost fuse

235 Air conditioner compressor cables connection
236 Rear cable connection with tailgate
237 FIAT CODE fuse
238 Electric rear windows control unit
239 Air Bag cable/left pretensioner cable connections
240 Air Bag cable/right pretensioner cable connections
241 Left pretensioner
242 Right pretensioner
243 Luggage compartment light button

244 Integrated services electronic control unit
245 Rear courtesy light
247 Lambda probe fuse (1370)(1998)

248 Radio controls on steering wheel
249 Diagnostic socket for climate control system
250 Fuel pump fuse (1370)(1747)(1998)

252 Auto transmission cables/engine connection

253 Climate control system control unit
254 Climate controls with car interior temperature sensor
255 Electronic speed variator for climate control fan
256 Air mixing actuator
257 Fuel pump relay (1747)

258 Treated air temperature sensor
259 Desired temperature adjustment switch

260 "MAX-DEF" microswitch
261 Tailgate lock/unlock actuator
262 Seat belts warning light switch
263 Heated seats fuse
264 Rear left courtesy light

265 Reear right courtesy light

266 Electronic fuel injection control unit (2387)

267 Auto transmission control unit
268 Auto transmission connection
269 Auto transmission cables connection with dashboard
270 Auto transmission cables connection with rear
271 Kick-down switch
272 Ignition switch solenoid
273 Auto transmission fuse

274 Auto transmission fuse

275 Auto transmission oil radiator fan relay

276 Starter enablement relay
277 Auto transmission oil radiator fan

278 Auto transmission diagnostic socket
279 Auto transmission gear selector
280 ICE/SPORT selector for auto transmission

281 Shift Lock solenoid
282 Additional PARK switch for auto transmission
283 Auto transmission safety control unit
284 Auto transmission connection on gearbox
285 E.G.R. solenoid (2387)

286 Diesel pump (2387)
287 Solenoid on diesel pump for advance (TD)
288 Electronic fuel injection relay (TD)
289 PCT thermal contact (TD)
290 PCT heater resistor (TD)
291 Potentiometer on accelerator pedal (2387 TD)
292 Clutch pedal switch (2387 TD)
293 Air cleaner clogged indicator sensor (2387TD)
294 Electronic fuel injection control unit (1910TD-100)
295 Fuel injection fuse (1910TD-100)

296 Potentiometer on accelerator lever (1910TD)
297 Fast idle valve (1910TD)
298 E.G.R. electronic control unit (1910TD-75)
299 Water temperature sensor (preheating) (1910TD-75)
00 K.S.B. thermal switch (1910TD-75)

301 KSB device (1910TD-75)
302 Diagnostic socket for EGR system (1910TD-75)
303 Diesel preheating fuse (TD)
304 Diesel preheating relay (TD)

305 Compressor disconnect relay (1910T-D-75)

N.D. Ultrasound-soldered joint taped in wiring loom

Cable colour codes

A	Light blue
B	White
C	Orange
G	Yellow
H	Grey
L	Blue
M	Brown
N	Black
R	Red
S	Pink
V	Green
Z	Purple
AB	Light blue-White
AG	Light blue-Yellow
AN	Light blue-Black
AR	Light blue-Red
AV	Light blue-Green
BG	White-Yellow
BL	White-Blue
BN	White-Black
BR	White-Red
BV	White-Green
BZ	White-Purple
CA	Orange-Light blue
CB	Orange-White
CN	Orange-Black
GN	Yellow-Black
GL	Yellow-Blue
GR	Yellow-Red
GV	Yellow-Green
HG	Grey-Yellow
HN	Grey-Black
HR	Grey-Red
HV	Grey-Green
LB	Blue-White
LG	Blue-Yellow
LN	Blue-Black
LR	Blue-Red
LV	Blue-Green
MB	Brown-White
MN	Brown-Black
NZ	Black-Purple
RB	Red-White
RG	Red-Yellow
RN	Red-Black
RV	Red-Green
SN	Pink-Black
VB	Green-White
VN	Green-Black
VR	Green-Red
ZB	Purple-White

Analytical charts

Fault diagnosis electrical system

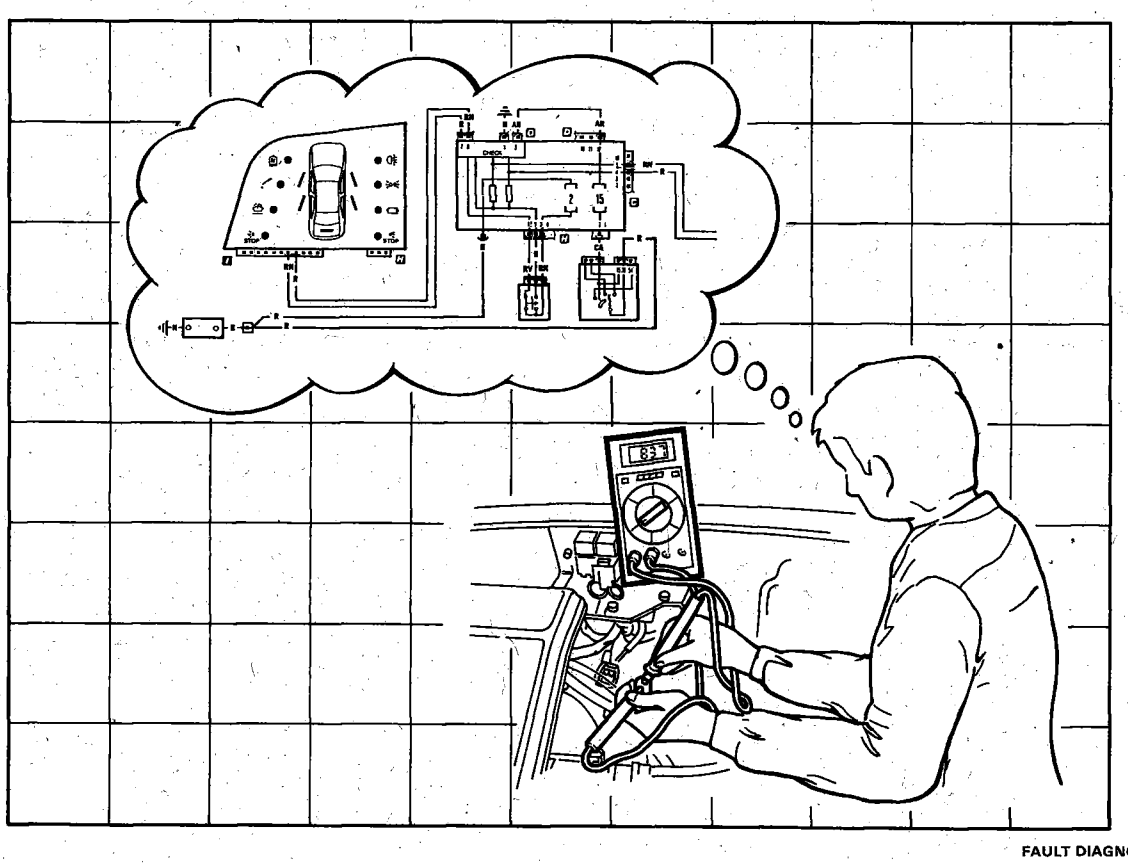

FAULT DIAGNOSIS

Chart N°	Functions involved
Chart 1 (page 1)	Side lights and warning light - Dipped beam headlamps - Main beam headlamps and warning light - Number plate lights
Chart 2 (page 19)	Electric front windows
Chart 3 (page 25)	Electric rear windows
Chart 4 (page 31)	Central locking
Chart 5 (page 43)	Direction indicators and warning light - Hazard warning lights - Braking lights - Reversing lights

Copyright by Fiat Auto

The exterior lights are not working

Check condition of steering column switch unit 7 ➡ Not OK ➡ Overhaul or replace steering column switch unit 7

⬇

OK

⬇

Check the condition of the ignition switch 12 ➡ Not OK ➡ Overhaul or replace the ignition switch 12

The side lights and the number plate lights are not working

In versions fitted with a Check Panel, the breaking inthe wiring or the failure of the bulb for one of the lights is signalled, but a general supply failure for the lights is not reported and should be analyzed as indicated.

Check the condition of fuses 2 and 3 in the junction unit 4 ➡ Not OK ➡ Check for a short circuit in the system and replace 2 and 3

⬇

OK

⬇

With the lights on, check for voltage at the G coloured cable at connector F pin 5 of the junction unit 4 ➡ OK ➡ Check the condition of the control unit 4, overhaul it or replace it

⬇

Not OK

⬇

With the lights on, check for voltage at the G coloured cable for connector B of the ignition switch 12 ➡ OK ➡ Restore the continuity for the G coloured cable between the ignition switch 12 and the junction unit 4

⬇

Not OK

⬇

4F301A

Copyright by Fiat Auto

55D.

↓

Ponticellare i cavi colore AG e GV sul connettore B del devioguida 7	➡	OK	➡	Verificare l'integrità del devioguida, revisionarlo o sostituirlo

↓

Non OK

↓

Con chiave su MAR, verificare la presenza di tensione sul cavo colore GV del commutatore di accensione 12	➡	OK	➡	Verificare l'integrità del commutatore di accensione 12, revisionarlo o sostituirlo

↓

Non OK

↓

Con chiave su MAR, verificare la presenza di tensione sul cavo colore GV connettore B devioguida 7	➡	OK	➡	Ripristinare la continuità del cavo colore GV tra il devioguida 7 e il commutatore di accensione 12

↓

Non OK

↓

Con chiave su MAR, verificare la presenza di tensione sul cavo colore AG del commutatore d'accensione 12	➡	OK	➡	Ripristinare la continuità del cavo colore AG tra il commutatore di accensione 12 e il devioguida 7

↓

Non OK

↓

Verificare l'integrità del commutatore d'accensione 12	➡	Non OK	➡	Revisionare o sostituire il commutatore 12

Le luci di posizione anteriore sinistra, posteriore destra e la luce targa sinistra non funzionano

Verificare l'integrità del fusibile 3 nella centralina di derivazione	➡	Non OK	➡	Verificare la presenza di un cortocircuito nell'impianto e sostituire il fusibile 3

↓

OK

↓

4F302A

Check the condition of the junction unit 4	➡	Not OK	➡	Overhaul or replace the junction unit 4

The right front, left rear side lights and the right no. plate lights are not working

Check the condition of the fuse 2 in the junction unit 4	➡	Not OK	➡	Check for a short circuit in the system and replace the fuse 2

OK

Check the condition of the junction unit 4	➡	Not OK	➡	Overhaul or replace the control unit 4

The left front side light is not working

Check the condition of the bulb	➡	Not OK	➡	Replace the bulb

OK

Check the condition of the bulb holder	➡	Not OK	➡	Replace the bulb holder

OK

With the lights on, check for voltage at the AV or GL coloured cable for the left front light cluster 1	➡	OK	➡	Overhaul or replace the light cluster 1

4F303A

Copyright by Fiat Auto

55D.

↓

Not OK

↓

With the lights on, check for voltage at the AV coloured cable connector D pin 16 of the junction unit 4 → OK → **Versions without Check Panel:** Restore the continuity for the AV coloured cable between the junction unit 4 and the light cluster 1 **Versioni con Check Panel:** Ripristinare la continuità del cavo colore AV/GL che "attraversa" il dispositivo Check Panel 6, connettore C pin 2

↓

Not OK

↓

Check the condition of the junction unit 4 → Not OK → Overhaul or replace the junction unit 4

↓

OK

↓

Versions with Check Panel: Check the condition of the Check Panel 6, connector C for the instrument panel → Not OK → Overhaul or replace the instrument panel 6

The right front side light is not working

Check the condition of the bulb → Not OK → Replace the bulb

↓

OK

↓

Check the condition of the bulb holder → Not OK → Replace the bulb holder

↓

OK

↓

With the lights on, check for voltage at the GV coloured cable for the right front light cluster 2 → OK → Overhaul or replace the light cluster 2

↓

Not OK

↓

4F304A

With the lights on, check for voltage at the AB coloured cable connector D pin 13 of the junction unit 4 → OK → **Versions without Check Panel:** Restore the continuity for the AB/GV coloured cable between the junction unit 4 and the light cluster 2 **Versioni con Check Panel:** Ripristinare la continuità del cavo colore AV/GV che "attraversa" il dispositivo Check Panel 6, connettore C pin 6

↓

Not OK

↓

Check the condition of the junction unit 4 → Not OK → Overhaul or replace the junction unit 4

↓

OK

↓

Versions with Check Panel: Check the condition of the Check Panel 6, connector C of the instrument panel → Not OK → Overhaul or replace the instrument panel 6

The left rear side light is not working

Check the condition of the bulb → Not OK → Replace the bulb

↓

OK

↓

Check the condition of the bulb holder → Not OK → Overhaul or replace the bulb holder

↓

OK

↓

With the lights on, check for voltage at the GN coloured cable for the left rear light cluster 16 → OK → Overhaul or replace the light cluster 16

↓

4F305A

55D.

↓

Not OK

↓

Versions without Check Panel:
With the lights on, check for voltage sul cavo colore GN connettore G pin 8 della centralina di derivazione 4
Versioni con Check Panel:
With the lights on, check for voltage at the GN coloured cable connector C pin 5 of the Check Panel 6

→ OK → Restore the continuity for the GN coloured cable between the junction unit 4 or the Check Panel 6 and the left rear light cluster 16

↓

Not OK

↓

Check the condition of the junction unit 4 → Not OK → Overhaul or replace the junction unit 4

↓

OK

↓

Versions with Check Panel:
Check the condition of the Check Panel 6, connector C of the instrument panel

→ Not OK → Overhaul or replace the instrument panel 6

4F306A

The right rear side light is not working

Check the condition of the bulb → Not OK → Replace the bulb

↓

OK

↓

Check the condition of the bulb holder → Not OK → Overhaul or replace the bulb holder

↓

OK

↓

With the lights on, check for voltage at the GR coloured cable for the right rear light cluster 17 → OK → Overhaul or replace the right rear light cluster 17

↓

Not OK

↓

Versions without Check Panel:
With the lights on, check for voltage at the GR coloured cable connector G pin 9 of the junction unit 4
Versions with Check Panel:
With the lights on, check for voltage at the GR coloured cable connector C pin 4 of the Check Panel 6 → OK → Restore the continuity of the GR coloured cable between the junction unit 4 or the Check Panel 6 and the right rear light cluster 17

↓

Not OK

↓

Check the condition of the junction unit 4 → Not OK → Overhaul or replace the junction unit 4

↓

OK

↓

Versions with Check Panel:
Check the condition of the Check Panel 6, connector C of the instrument panel → Not OK → Overhaul or replace the instrument panel 6

4F307A

Copyright by Fiat Auto

55D.

The side lights warning light is not working

With the lights on, check for voltage at the GN coloured cable, connector J pin 3 of the junction unit 4 → Not OK → Overhaul or replace the junction unit 4

↓

OK

↓

With the lights on, check for voltage at the GN coloured cable, connector B pin 3 of the instrument panel 6 → Not OK → Restore the continuity for the GN coloured cable between the instrument panel 6 and the control unit 4

↓

OK

↓

Check the condition of the warning light C in the instrument panel 6 → Not OK → Replace the warning light C in the instrument panel 6

↓

OK

↓

Check the condition of the instrument panel 6 → Not OK → Overhaul or replace the Instrument panel 6

Both the no. plate lights are not working

Check the condition of the junction unit 4 → Not OK → Overhaul or replace the junction unit 4

The left no. plate light is not working

Check the condition of the bulb → Not OK → Replace the bulb

↓

4F308N

OK

Check the condition of the bulb holder → Not OK → Overhaul or replace the bulb holder

OK

With the lights on, check for voltage at the HL coloured cable, for the left no. plate light 14 → OK → Overhaul or replace the no. plate light cluster 14

Not OK

Bridge the N coloured cable at the left no. plate light 14 with an earth → OK → Restore the continuity of the N coloured cable between the left no. plate light 14 and the left rear earth 18

Not OK

Versions without Check Panel:
With the lights on, check for voltage at the HL coloured cable, connector E pin 10 of the junction unit 4
Versions with Check Panel:
With the lights on, check for voltage at the HL coloured cable, connector C pin 8 of the Check Panel 6 → OK → Restore the continuity for the HL coloured cable between the junction unit 4 or the Check Panel 6 and the left no. plate light 14

Not OK

Check the condition of the junction unit 4 → Not OK → Overhaul or replace the junction unit 4

OK

Versions with Check Panel:
Check the condition of the Check Panel 6, connector C of the instrument panel → Not OK → Overhaul or replace the instrument panel 6

4F309A

Copyright by Fiat Auto

55D.

The right no. plate light is not working

Check the condition of the bulb	➡	Not OK	➡	Replace the bulb
⬇ OK				
Check the condition of the bulb holder	➡	Not OK	➡	Overhaul or replace the bulb holder
⬇ OK				
With the lights on, check for voltage at the HB coloured cable, for the right no. plate light 15	➡	OK	➡	Overhaul or replace the light cluster for the no. plate 15
⬇ Not OK				
Bridge the N coloured cable at the right no. plate light 15 with an earth	➡	OK	➡	Restore the continuity of the N coloured cable between the right no. plate light 15 and the left rear earth 18
⬇ Not OK				
Versions without Check Panel: With the lights on, check for voltage at the HB coloured cable, connector G pin 1 of the junction unit 4 **Versions with Check Panel:** With the lights on, check for voltage at the HB coloured cable, connector C pin 7 of the Check Panel	➡	OK	➡	Restore the continuity for the GN coloured cable between the junction unit 4 or the Check Panel 6 and the right no. plate light 15
⬇ Not OK				
Check the condition of the junction unit 4	➡	Not OK	➡	Overhaul or replace the junction unit 4
⬇ OK				
Versions with Check Panel: Check the condition of the Check Panel 6, connector C of the instrument panel	➡	Not OK	➡	Overhaul or replace the instrument panel 6

4F310A

Both the dipped headlamps are not working

Check the condition of the fuses 4 and 5 in the junction unit 4 → Not OK → Check for a short circuit in the system and replace the fuses 4 and 5

↓

OK

↓

Check the condition of the junction unit 4 → Not OK → Overhaul or replace the junction unit 4

Both the dipped headlamps are not working opreated by the steering column switch unit

Bridge HR & CB coloured cables at connector B of st. column switch unit 7 → OK → Overhaul or replace steering column switch unit 7

↓

Not OK

↓

With the lights on, check for voltage at the HR coloured cable, connector F pin 1 of the junction unit 4 → Not OK → Restore the continuity of the HR coloured cable between the junction unit 4 and the steering column switch unit 7 through the relay 5

↓

OK

↓

Check the condition of the junction unit 4 → Not OK → Overhaul or replace the junction unit 4

Both the dipped headlamps are not working with the main beam headlamps on

Bridge the R and HR coloured cables at the dipped headlamps relay 5 → OK → Overhaul or replace the relay 5

↓

Not OK

↓

Bridge the N coloured cable at relay 5 with an earth → OK → Restore the continuity of the N coloured cable between the relay 5 and the earth 42

↓

4F311A

Copyright by Fiat Auto

55D.

↓

Not OK

↓

Check for voltage at the R coloured cable at relay 5 → Not OK → Restore the continuity of the R coloured cable between the relay 5 and the junction unit 4, connector B

↓

OK

↓

With the main beam headlamps on, check for voltage at the L coloured cable for relay 5 → Not OK → Restore the continuity for the L/LB coloured cable between the relay 5 and the connector J, pin 6 of the junction unit 4 or overhaul the junction unit 4

↓

OK

↓

Check the condition of the relay 5 → Not OK → Replace the relay 5

↓

OK

↓

Check the condition of the junction unit 4 → Not OK → Overhaul or replace the junction unit 4

The left dipped headlamp is not working

Check the condition of the fuse 5 in the junction unit 4 → Not OK → Check for a short circuit in the system and replace the fuse 5

↓

OK

↓

Check the condition of the bulb → Not OK → Replace the bulb

↓

4F312A

↓

OK

↓

Check the condition of the bulb holder → Not OK → Overhaul or replace the bulb holder

↓

OK

↓

With the lights on, check for voltage at the HN of the left front light cluster 1 → OK → Overhaul or replace the left front light cluster 1

↓

Not OK

↓

With the lights on, check for voltage at the HN, connector C pin 5 of the junction unit 4 → OK → Restore the continuity of the HN coloured cable between the junction unit 4 and the left front light cluster 1

↓

Not OK

↓

Check the condition of the junction unit 4 → Not OK → Overhaul or replace the junction unit 4

The right dipped headlamp is not working

Check the condition of the fuse 4 in the junction unit 4 → Not OK → Check for a short circuit in the system and replace the fuse 4

↓

OK

↓

Check the condition of the bulb → Not OK → Replace the bulb

↓

4F313A

Copyright by Fiat Auto

55D.

↓

OK

↓

Check the condition of the bulb holder → Not OK → Overhaul or replace the bulb holder

↓

OK

↓

With the lights on, check for voltage at the H coloured cable for the right front light cluster 2 → OK → Overhaul or replace the right front light cluster 2

↓

Not OK

↓

With the lights on, check for voltage at the H coloured cable, connector C pin 4 of the junction unit 4 → OK → Restore continuity for H coloured cable between junction unit 4 and right front light cluster 2

↓

Not OK

↓

Check the condition of the junction unit 4 → Not OK → Overhaul or replace the junction unit 4

The left main beam headlamp and the warning light are not working

Check the condition of the fuse 7 in the junction unit 4 → Not OK → Check for a short circuit in the system and replace the fuse 7

↓

OK

↓

Check the condition of the junction unit 4 → Not OK → Overhaul or replace the junction unit 4

4F314A

The left main beam headlamp is not working

Check the condition of the bulb → Not OK → Replace the bulb

↓

OK

↓

Check the condition of the bulb holder → Not OK → Overhaul or replace the bulb holder

↓

OK

↓

With the lights on, check for voltage at the VN coloured cable of the left front light cluster 1 → OK → Overhaul or replace the left front light cluster 1

↓

Not OK

↓

With the lights on check for voltage at the VN coloured cable connector C pin 6 of the junction unit 4 → OK → Restore the continuity for the VN coloured cable between the junction unit 4 and the left front light cluster 1

↓

Not OK

↓

Check the condition of the junction unit 4 → Not OK → Overhaul or replace the junction unit 4

The right main beam headlamp is not working

Check the condition of the fuse 6 in the junction unit 4 → Not OK → Check for a short circuit in the system and replace the fuse 6

↓

4F315A

Copyright by Fiat Auto

55D.

↓

OK

↓

Check the condition of the bulb → Not OK → Replace the bulb

↓

OK

↓

Check the condition of the bulb holder → Not OK → Overhaul or replace the bulb holder

↓

OK

↓

With the lights on, check for voltage at the V coloured cable for the right front light cluster 2 → OK → Overhaul or replace the right front light cluster 2

↓

Not OK

↓

With the lights on, check for voltage at the V coloured cable connector C pin 7 of the junction unit 4 → OK → Restore the continuity for the V coloured cable between junction unit 4 and right front light cluster 2

↓

Not OK

↓

Check the condition of the junction unit 4 → Not OK → Overhaul or replace the junction unit 4

4F316A

The main beam headlamps warning light are not working

With the lights on, check for voltage at the LB coloured cable connector J pin 6 of the junction unit 4 → Not OK → Overhaul or replace the junction unit 4

↓

OK

↓

Check for voltage at the LB coloured cable, connector B pin 1 of the instrument panel 6 → Not OK → Restore the continuity for the LB coloured cable between the instrument panel 6 and the junction unit 4

↓

OK

↓

Check the condition of the warning light D in the instrument panel 6 → Not OK → Replace the warning light D in the instrument panel 6

↓

OK

↓

Check the condition of the instrument panel 6 → Not OK → Overhaul or replace the instrument panel 6

Copyright by Fiat Auto

55D.

The electric front windows are not working

Check the condition of the fuse 72 protecting the electric windows → Not OK → Check for a short circuit in the system and replace the fuse 72

↓

OK

↓

Bridge the N coloured cables at the control unit 244, connector A, pin 20 and 4 with an earth → OK → Restore the continuity for N coloured cables between control unit 244 & earth 42

↓

Not OK

↓

Check for voltage at the R coloured cable for fuse 72 → Not OK → Restore the continuity of the R coloured cable between the fuse 72 and the junction unit 4, connector B

↓

OK

↓

Check for voltage at the LR coloured cable for the control unit 244, connector A, pin 15 and 16 → Not OK → Restore the continuity of the LR coloured cable between the control unit 244 and the fuse 72 or check the condition of the fuse carrier

↓

OK

↓

Check the condition for the control unit 244 → Not OK → Replace the control unit 244

The left electric window is not working

Check the condition of the fuse 8 in the junction unit 4 → Not OK → Check for a short circuit in the system and replace the fuse 8

↓

OK

↓

With ignition ON, check for voltage at R coloured cable of electric windows control panel 73, connector A → Not OK → Restore the continuity of the R/C coloured cable between the push buttons 73 and the junction unit, connector H, pin 2

↓

4F319A

Copyright by Fiat Auto

55D.

OK

Bridge the N coloured cable for the push buttons 73, connector A with an earth → OK → Restore continuity of N coloured cable between push buttons 73 & earth 22

Not OK

Extract connector A for the push buttons 73 from its housing & bridge CB/R and N/CN coloured cables → OK → Overhaul or replace the electric windows control panel 73

Not OK

Extract connector A for the panel 73 from its housing, bridge the R/CN and N/CB coloured cables → OK → Overhaul or replace the electric windows control panel 73

Not OK

Extract connector A for panel 73 from its housing & connector A for control unit 244: bridge CN/CB coloured cables at control unit 244 (pin 10 & 11) and insert an ohmmeter between CN/CB coloured cables at connector for panel 73 → Not OK → Restore the continuity for the CN/CB coloured cables between panel 73 and control unit 244

OK

Extract con. for elec. windows motor 76 from its housing & connector A for ctrl unit 244: bridge BV/ZG coloured cables at control unit 244 (pin 8 & 9) and insert an ohmmeter btwn BV/ZG coloured cables at con. of elec. window motor 76 → Not OK → Restore cont. of BV/ZG coloured cable between motor 76 & control unit 244

OK

4F304A

Check the condition of the electric window motor 76	Not OK	Overhaul or replace the electric window motor 76

The right front electric window is not working operated by the driver's side panel

Check the condition of the fuse 8 in the junction unit 4	Not OK	Check for a short circuit in the system and replace the fuse 8
OK		
With the ignition on, check for voltage at the R coloured cable for the electric windows control panel 73, connector B	Not OK	Restore the continuity of the R/C coloured cable between the panel 73 and the junction unit, connector H pin 2
OK		
Bridge the N coloured cable for the panel 73 connector B with an earth	OK	Restore the continuity of the N coloured cable between the panel 73 & the earth 22
Not OK		
Extract connector B for the panel 73 from its housing and bridge the RV/R & N/RN coloured cables	OK	Overhaul or replace the electric windows control panel 73
Not OK		
Extract connector B for the panel 73 from its housing, bridge the R/RN and N/RV coloured cables	OK	Overhaul or replace the electric windows control panel 73
Not OK		
Extract connector B for the panel 73 from its housing and connector A in the control unit 244: bridge the RV/RN coloured cables at control unit 244 (pin 5 & 18) and insert an ohmmeter between the RV/RN coloured cables at connector for the panel 73	Not OK	Restore the continuity for the RV/RN coloured cables between the panel 73 and the control unit 244

4F321N

Copyright by Fiat Auto

55D.

The right front electric window is not working operated by the passenger side panel

Check the condition of the fuse 14 in the junction unit 4 → Not OK → Check for a short circuit in the system and replace the fuse 14

↓

OK

↓

With the ignition on, check for voltage at the C coloured cable at the electric window control panel 74 → Not OK → Restore continuity for C coloured cable between panel 74 and junction unit, connector I pin 5

↓

OK

↓

Bridge the N coloured cable for the panel 74 with an earth → OK → Restore continuity for N coloured cable between panel 74 and earth 42

↓

Not OK

↓

Extract the connector for the panel 74 from its housing and bridge the GN/C & N/SB coloured cables → OK → Overhaul or replace the electric windows control panel 74

↓

Not OK

↓

Extract the connector for the panel 74 from its housing, bridge the SB/C and N/GN coloured cables → OK → Overhaul or replace the electric windows control panel 74

↓

Not OK

↓

Extract the con. for the panel 74 from its housing & connector A for control unit 244: bridge the GN/SB coloured cables at the control unit 244 (pin 2 & 6) & insert an ohmmeter btwn the GN/SB coloured cables at connector for panel 74 → Not OK → Restore the continuity for the GN/SB coloured cable between the panel 74 & the control unit 244

4F322N

The right front electric window is not working

Bridge ZB coloured cable between control unit 244 (connector A pin 1) and electric window motor 77 → OK → Restore continuity for ZB coloured cable between control unit 244 and electric window motor 77

↓

Not OK

↓

Bridge the BR coloured cable between the control unit 244 (con. A pin 3) and the elec. window motor 77 → OK → Restore the continuity for the BR coloured cable between control unit 244 & electric window motor 77

↓

Not OK

↓

Check condition of the right electric window motor 77 → Not OK → Overhaul or replace the electric window motor 77

Copyright by Fiat Auto

55D.

The electric rear windows are not working

Check the condition of the fuse protecting the rear electric windows 81	Not OK	Check for a short circuit in the system and replace the fuse 81
OK		
Check for voltage at the R coloured cable for fuse 81	Not OK	Restore the continuity of the R coloured cable between the fuse 81 and the junction unit 4, connector B
OK		
Check for voltage at the L coloured cables for the rear electric windows control unit 238, connector A pin 1 & 2	Not OK	Restore continuity for L coloured cables btwn fuse 81 & control unit 238
OK		
Check the condition of the fuse 8 in the junction unit 4	Not OK	Check for a short circuit in the system and replace the fuse 8
OK		
With ignition on, check for voltage at the AR cable for the rear electric windows control unit 238, connector B pin 11	Not OK	Restore continuity for AR coloured cable between electric windows control unit 238 and junction unit 4 connector G pin 4, or check condition of junction unit 4
OK		
Bridge N coloured cables at electric windows control unit 238, connector A pin 3 & 4 & connector B pin 12	OK	Restore the continuity for the N coloured cables btwn the electric windows control unit 238 & the earth 19
Not OK		
With the ignition on, check for voltage at the R coloured cable for the rear electric windows inhibitor button 80	Not OK	Restore the continuity of the R/C coloured cable between the button 80 and the junction unit 4, connector H pin 2

4F325N

Copyright by Fiat Auto

55D.

OK

Extract the connector for the inhibitor button 80 from its housing, bridge the R coloured cable with the C coloured cable → OK → Overhaul or replace the button 80

Not OK

Check the condition of the electric rear windows control unit 238 → Not OK → Replace the control unit 238

The left rear electric window is not working operated by the left front panel

With the ignition on, check for voltage at the C coloured cable of the electric window control panel 78 A → Not OK → Restore continuity for C coloured cable between panel 78A and electric windows inhibitor button 80

OK

Check the condition of the electric window control panel 78A → Not OK → Overhaul or replace the panel 78A

OK

Bridge the N coloured cable for the panel 78A with an earth → OK → Restore continuity of the N coloured cable between the panel 78A & the earth 22

Not OK

Extract connector A for the panel 78 from its housing, bridge the AV/C & N/AN coloured cables → OK → Overhaul or replace the electric windows control panel 78A

Not OK

Extract connector A for the panel 78 from its housing, bridge the AN/C & N/AV coloured cables → OK → Overhaul or replace the electric windows control panel 78A

4F326N

Not OK

Extract connector A for the panel 78 from its housing and connector B for control unit 238, bridge the AN/AV coloured cables at control unit 238 (pin 3 & 4) and insert an ohmmeter between the AN/AV coloured cables at the panel 78 connector → Not OK → Restore the continuity for the AN/AV coloured cables between the panel 78A & the control unit 238

OK

Check the condition of the control unit 238 → Not OK → Replace the control unit 238

The left rear electric window is not working operated by the left rear panel

Check for voltage at the RN coloured cable at the electric window control panel 82 → Not OK → Restore continuity for RN/C coloured cable btwn panel 82 & electric windows inhibitor switch 80

OK

Check condition of electric window control panel 82 → Not OK → Overhaul or replace the panel 82

OK

Bridge the N coloured cable for the panel 82 with an earth → OK → Restore continuity for N coloured cable between panel 82 & earth 18

Not OK

Extract the connector for the panel 82 from its housing, bridge the LV/N & LN/RN coloured cables → OK → Overhaul or replace the electric windows panel 82

Not OK

Extract the connector for the panel 82 from its housing, bridge the LV/RN & LN/N coloured cables → OK → Overhaul or replace the electric windows panel 82

4F327N

Copyright by Fiat Auto

55D.

Not OK

Extract the con. for the panel from its housing and con. B for control unit 238, bridge the LV/LN coloured cables at the control unit 238 (pin 7 & 8) & insert an ohmmeter btwn the LV/LN coloured cables at the connector for the panel 82 → Not OK → Restore the continuity for the LV/LN coloured cables between the panel 82 & the control unit 238

OK

Check the condition of the control unit 238 → Not OK → Replace the control unit 238

The right rear electric window is not working operated by the left front panel

With the ignition on, check for voltage at the C coloured cable for the electric window control panel 78B → Not OK → Restore continuity for C coloured cable between panel 78B & electric windows inhibitor switch 80

OK

Check the condition of the electric window control panel 78B → Not OK → Overhaul or replace the panel 78B

OK

Bridge the N coloured cable for the panel 78B with an earth → OK → Restore continuity for N coloured cable between panel 78B & earth 22

Not OK

Extract connector B for the panel 78 from its housing, bridge the GV/C & N/GN coloured cables → OK → Overhaul or replace the electric windows panel 78B

Not OK

Extract connector B for the panel 78 from its housing, bridge the GN/C & N/GV coloured cables → OK → Overhaul or replace the electric windows panel 78B

4F328N

Not OK

Extract connector B for the panel 78 from its housing and connector B for control unit 238, bridge the GN/GV coloured cables at control unit 238 (pin 1 7 2) and insert an ohmmeter between the GN/GV coloured cables at connector for panel 78 → Not OK → Restore the continuity for the GN/GV coloured cables between panel 78B & control unit 238

OK

Check the condition of the control unit 238 → Not OK → Replace the control unit 238

The right rear electric window is not working operated by the right rear panel

Check for voltage at the RN coloured cable at the electric window control panel 83 → Not OK → Restore continuity for RN coloured cable between panel 83 & electric windows inhibitor switch 80

OK

Check the condition of the electric window control panel 83 → Not OK → Overhaul or replace the panel 83

OK

Bridge the N coloured cable for the panel 83 with an earth → OK → Restore the continuity for the N coloured cable btwn panel 83 & earth 19

Not OK

Extract the connector for panel 83 from its housing, bridge the BN/RN & BV/N coloured cables → OK → Overhaul or replace the electric windows panel 83

Not OK

Extract the connector for panel 83 from its housing, bridge the BN/N & BV/RN coloured cables → OK → Overhaul or replace the electric windows panel 83

4F329N

Copyright by Fiat Auto

55D.

Not OK

Extract the connector for panel 83 from its housing and connector B for control unit 238, bridge the BN/BV coloured cables at control unit 238 (pin 5 & 6) and insert an ohmmeter btwn the BN/BV coloured cables at the connector for panel 83 → Not OK → Restore the continuity for the BN/BV coloured cables between panel 83 & control unit 238

OK

Check the condition of the control unit 238 → Not OK → Replace the control unit 238

The left rear electric window is not working

Extract connector A for control unit 238 and motor 84 from its housing, bridge the ZG and BV coloured cables at the connector for motor 84 and insert an ohmmeter btwn the ZG & BV coloured cables at connector A for control unit 238 (pin 7 & 8) → Not OK → Restore the continuity for the ZG and BV coloured cables between motor 84 & control unit 238

OK

Check the condition of the electric window motor 84 → Not OK → Overhaul or replace the motor 84

The right rear electric window is not working

Extract con. A for control unit 238 and motor 85 from its housing, bridge the BR & ZB coloured cables at the connector for motor 85 & insert an ohmmeter btwn the BR & ZB coloured cables at connector A for control unit 238 (pin 5 & 6) → Not OK → Restore the continuity for the BR and ZB coloured cables between motor 85 & control unit 238

OK

Check the condition of the electric window motor 85 → Not OK → Overhaul or replace the motor 85

The central locking is not working

Check the condition of the fuse 113 protecting the central locking system → Not OK → Check for a short circuit in the system and replace the fuse 113

↓

OK

↓

Check the condition of the fuse 8 inside the junction unit 4 → Not OK → Check for a short circuit in the system and replace the fuse 8

↓

OK

↓

Check for voltage at one of the R coloured cables for fuse 113 → Not OK → Restore the continuity of the R coloured cable between fuse 113 & junction unit 4, connector B

↓

OK

↓

Check for voltage at the R coloured cable for the control unit 244, pin 8 connector B → Not OK → Restore the continuity of the R coloured cable between control unit 244 & fuse 113

↓

OK

↓

With the ignition on, check for voltage at the R coloured cable for the control unit 244, pin 7 connector B → Not OK → Restore the continuity for the RG/C coloured cable between control unit 244 & junction unit 4, connector H pin 2

↓

OK

↓

Bridge the N coloured cable at the control unit 244, pin 13 connector B with an earth → OK → Restore the continuity of the N coloured cable between control unit 244 & earth 42

↓

Not OK

↓

Extract connectors 35 & 244-B from their housings, bridge the H/G coloured cables at control unit 244 (pin 5 & 4) and insert an ohmmeter at the H/G coloured cables for connector 35 → Not OK → Restore the continuity for the H/G coloured cables between control unit 244 & connector 35

↓

4F331N

Copyright by Fiat Auto

55D.

↓

OK

↓

Check the condition of the control unit 244 → Not OK → Overhaul or replace the control unit 244

The central locking is not working operated by the receiver

Check the voltage of the accumulator inside the remote control/key → Not OK → Replace the accumulator

↓

OK

↓

Check the condition of the fuse 10 inside the junction unit 4 → Not OK → Check for a short circuit in the system and replace the fuse 10

↓

OK

↓

Check for voltage at the RN coloured cable for receiver 107A, pin 3 → Not OK → Restore the continuity for the RN coloured cable between the receiver 107A & the connector G, pin 10 of the junction unit 4

↓

OK

↓

With the ignition on, check for voltage at the AR coloured cable at receiver 107A, pin 7 → Not OK → Restore the continuity for the AR coloured cable between receiver 107A & connector E, pin 11 of the junction unit 4

↓

OK

↓

Bridge the N coloured cable at receiver 107A, pin 4 with an earth → OK → Restore the continuity of the N coloured cable between receiver 107A & earth 18

↓

Not OK

↓

4F332N

Check the condition of the central locking receiver 107A	Not OK	Overhaul or replace the receiver 107A
OK		
Check the condition of the central locking key/remote control	Not OK	Overhaul or replace the remote control/key

The central locking does not lock the doors operated by he receiver

Bridge the A coloured cable at the receiver 107A, pin 6, with an earth	Not OK	Restore continuity of A coloured cable between receiver 107A and control unit 244, connector C, pin 6
OK		
Check the condition of the receiver 107A	Not OK	Overhaul or replace the receiver 107A

The central locking does not unlock the doors operated by the receiver

Bridge the B coloured cable at receiver 107A, pin 5, with an earth	Not OK	Restore the continuity of the B coloured cable between receiver 107A & control unit 244, connector C pin 15
OK		
Check the condition of the receiver 107A	Not OK	Overhaul or replace the receiver 107A

Copyright by Fiat Auto

55D.

The central locking is not working operated by the alarm device control unit

Bridge C coloured cable btwn connectors 28 & 70 → OK → Restore the continuity for the C coloured cable btwn connectors 28 & 70

↓

Not OK

↓

Bridge the N coloured cable between the alarm control unit 100 connector A pin 2 and the receiver 107A, pin 2 → OK → Restore the continuity for the N/C/MB coloured cable btwn the alarm control unit 100 & the receiver 107A

↓

Not OK

↓

Check the condition of the receiver 107A → Not OK → Overhaul or replace the receiver 107A

↓

OK

↓

Check the condition of the alarm control unit 100 → Not OK → Overhaul or replace the control unit 100

The central locking does not lock the doors

Bridge the G coloured cable at the control unit 244, connector B, pin 4 with an earth → OK → Restore the continuity for the G coloured cable btwn the control unit 244 and the ultrasound welding

↓

Not OK

↓

Check the condition of the control unit 244 → Not OK → Overhaul or replace the control unit 244

The central locking does not lock the doors operated by the left front lock

Bridge the N coloured cable at the left front central locking 110 with an earth → OK → Restore the continuity of the N coloured cable btwn the central locking 110 & the earth 22

↓

Not OK

↓

Extract connectors 244-B & 35 from their housings, bridge A/B coloured cables at control unit connector 244 (pin 15 & 16) & insert an ohmmeter btwn A/B coloured cables for connector 35 → Not OK → Restore the continuity of the A coloured cable btwn control unit 244 & connector 35

↓

OK

↓

Extract connectors 244-B & 110 from their housings, bridge the A/B coloured cables at the control unit connector 244 (pin 15 & 16) & insert an ohmmeter btwn the A/B coloured cables of the lock assembly 110 → Not OK → Restore the continuity of the A coloured cable between connector 35 & the lock assembly 110

↓

OK

↓

Bridge the A/N coloured cables at the left front lock assembly 110 → OK → Overhaul or replace the lock assembly 110

↓

Not OK

↓

Check the condition of the left front lock assembly 110 → Not OK → Overhaul or replace the lock assembly 110

4F335N

Copyright by Fiat Auto

55D.

The central locking does not lock the doors operated by the right front lock

Bridge the N coloured cable at the right front central locking 111 with an earth → OK → Restore the continuity of the N coloured cable btwn the central locking 111 & the earth 42

↓

Not OK

↓

Extract connectors 244-B & 36 from their housings, bridge A/B coloured cables at control unit con. 244 (pin 15 & 16) & insert an ohmmeter btwn A/B coloured cables of connector 36 → Not OK → Restore continuity of A coloured cable btwn control unit 244 & connector 36

↓

OK

↓

Extract connectors 244-B & 111 from their housings, bridge the A/B coloured cables at the control unit con. 244 (pin 15 & 16) and insert an ohmmeter btwn the A/B coloured cables of the lock assembly 111 → Not OK → Restore the continuity of the A coloured cable btwn connector 36 & lock assembly 111

↓

OK

↓

Bridge the A/N coloured cables at the right front lock assembly 111 → OK → Overhaul or replace the lock assembly 111

↓

Not OK

↓

Check condition of right front lock assembly 111 → Not OK → Overhaul or replace the lock assembly 111

4F336N

The central locking does not unlock the doors

Bridge the H coloured cable at control unit 244, connector B pin 5 with an earth → OK → Restore the continuity for the H coloured cable btwn control unit 244 & the ultrasound welding

↓

Not OK

↓

Check the condition of the control unit 244 → Not OK → Overhaul or replace the control unit 244

The central locking does not unlock the doors operated by the left front lock

Bridge the N coloured cable at the left front central locking 110 with an earth → OK → Restore the continuity of the N coloured cable btwn the central locking 110 & the earth 22

↓

Not OK

↓

Extract connectors 244-B & 35 from their housings, bridge the A/B coloured cables at the control unit connector 244 (pin 15 & 16) and insert an ohmmeter btwn the A/B coloured cables for connector 35 → Not OK → Restore the continuity of the B coloured cable btwn control unit 244 & connector 35

↓

OK

↓

Extract connectors 244-B & 110 from their housings, bridge the A/B cables at the control unit connector 244 (pin 15 & 16) and insert an ohmmeter between the A/B coloured cables of the lock assembly 110 → Not OK → Restore the continuity of the B coloured cable btwn connector 35 & lock assembly 110

↓

OK

↓

4F337N

Copyright by Fiat Auto

55D.

↓

Bridge the B/N coloured cables at the left front lock assembly 110 → OK → Overhaul or replace the lock assembly 110

↓

Not OK

↓

Check the condition of the left front lock assembly 110 → Not OK → Overhaul or replace the lock assembly 110

The central locking does not unlock the doors operated by the right front lock

Bridge the N coloured cable at the right front central locking 111 with an earth → OK → Restore the continuity of the N coloured cable btwn the central locking 111 & the earth 42

↓

Not OK

↓

Extract connectors 244-B & 36 from their housings, bridge A/B coloured cables at control unit connector 244 (pin 15 & 16) & insert an ohmmeter between A/B coloured cables of con. 6 → Not OK → Restore the continuity of the B coloured cable btwn control unit 244 & connector 36

↓

OK

↓

Extract connectors 244-B & 111 from their housings, bridge the A/B cables at the control unit connector 244 (pin 15 & 16) and insert an ohmmeter btwn the A/B coloured cables of the lock assembly 111 → Not OK → Restore the continuity of the B coloured cable btwn connector 36 and the lock assembly 111

↓

4F338N

↓

OK

↓

Bridge the B/N coloured cables at the right front lock assembly 111 → OK → Overhaul or replace the lock assembly 111

↓

Not OK

↓

Check the condition of the right front lock assembly 111 → Not OK → Overhaul or replace the lock assembly 111

The left front central locking motor is not working

Extract connectors 244-B & 35 from their housings, bridge H/G coloured cables at control unit connector 244 (pin 5 & 4) and insert an ohmmeter btwn H/G coloured cables for con. 35 → Not OK → Restore the continuity for the H/G coloured cables btwn control unit 244 & connector 35

↓

OK

↓

Extract connectors 35 and 110 from their housings, bridge the H/G coloured cables at connector 35 & insert an ohmmeter btwn the H/G coloured cables at the lock assembly con. 110 → Not OK → Restore the continuity for the H/G coloured cables btwn connector 35 & the lock assembly 110

↓

OK

↓

Check the condition of the left front central locking motor 110 → Not OK → Overhaul or replace the central locking motor 110

Copyright by Fiat Auto

55D.

The right front central locking motor is not working

Extract connectors 244 & 36 from their housings, bridge H/G coloured cables at control unit connector 244 (pin 5 & 4) and insert an ohmmeter btwn H/G coloured cables for connector 36

➡ Not OK ➡ Restore the continuity for the H/G coloured cables btwn control unit 244 & connector 36

⬇

OK

⬇

Extract connectors 36 & 111 from their housings, bridge the H/G coloured cables at connector 36 & insert an ohmmeter btwn the H/G coloured cables at the lock assembly connector 111

➡ Not OK ➡ Restore the continuity for the H/G coloured cables btwn connector 36 & the lock assembly 111

⬇

OK

⬇

Check the condition of the right front central locking motor 111

➡ Not OK ➡ Overhaul or replace the central locking motor 111

The left rear central locking motor is not working

Extract connectors 244-B & 86 from their housings, bridge H/G coloured cables at control unit connector 244 (pin 5 & 4) & insert an ohmmeter btwn H/G coloured cables for con. 86

➡ Not OK ➡ Restore the continuity for the H/G coloured cables btwn control unit 244 & connector 86

⬇

OK

⬇

Extract connectors 86 & 108 from their housings, bridge H/G coloured cables at connector 86 & insert an ohmmeter btwn H/G coloured cables at lock assembly connector 108 → Not OK → Restore the continuity for the H/G coloured cables btwn connector 86 & lock assembly 108

↓

OK

↓

Check the condition of the left rear central locking motor 108 → Not OK → Overhaul or replace the central locking motor 108

The right rear central locking motor is not working

Extract connectors 244-B & 87 from their housings, bridge H/G coloured cables at control unit connector 244 (pin 5 & 4) & insert an ohmmeter btwn H/G coloured cables for con. 87 → Not OK → Restore the continuity for the H/G coloured cables btwn ultrasound welding & connector 87

↓

OK

↓

Extract connectors 87 & 109 from their housings, bridge H/G coloured cables at connector 87 & insert an ohmmeter btwn H/G coloured cables at lock assembly connector 109 → Not OK → Restore the continuity for the H/G coloured cables btwn connector 87 & lock assembly 109

↓

OK

↓

Check the condition of the right rear central locking motor 109 → Not OK → Overhaul or replace the central locking motor 109

4F341N

Copyright by Fiat Auto

55D.

The direction indicators/hazard warning lights are not working

Bridge the AB/LB coloured cables at hazard warning lights switch 23 → OK → Overhaul or replace hazard warning lights switch 23

↓

Not OK

↓

Bridge LB coloured cable btwn switch 23 & steering column switch unit 7 con. D → OK → Restore cont. for LB coloured cable btwn switch 23 & st. col. switch unit 7

↓

Not OK

↓

Bridge LB coloured cable with AN/A coloured cables at st. col. switch unit 7 → OK → Replace direction indicataors/hazard w/lights intermittent device G in st. col. switch unit 7, or overhaul steering col. switch unit 7

The direction indicators are not working

Check the condition of the fuse 1 in the junction unit 4 → Not OK → Check for a short circuit in the system and replace the fuse 1

↓

OK

↓

Bridge LR coloured cable with A/AN coloured cables at connector C of steering column switch unit 7 → OK → Overhaul or replace the switch for direction indicators H in steering column switch unit 7, or overhaul steering col. switch unit 7

↓

Not OK

↓

Bridge the AR/LB coloured cables at hazard w/lights switch 23 → OK → Overhaul or replace hazard warning lights switch 23

↓

Not OK

↓

4F343N

Copyright by Fiat Auto

55D.

With the ignition on, check for voltage at the AR cable at connector A of the hazard warning lights control switch 23 → OK → Overhaul or replace the hazard warning lights switch 23

↓

Not OK

↓

With the ignition on, check for voltage at the AR cable connector I pin 12 of the junction unit 4 → Not OK → Overhaul or replace the junction unit 4

The hazard warning lights are not working

Check the condition of the fuse 9 in the junction unit 4 → Not OK → Check for a short circuit in the system and replace the fuse 9

↓

OK

↓

Bridge the AB/LB coloured cables at connector A of the hazard warning lights switch 23 → OK → Overhaul or replace the hazard warning lights switch 23

↓

Not OK

↓

Check for voltage at the AB coloured cable connector A of the hazard warning lights switch 23 → Not OK → Restore the continuity of the AB coloured cable btwn switch 23 and junction unit 4, connector I pin 11

↓

OK

↓

Bridge LB/LR coloured cables at st. col. switch unit 7 → OK → Replace intermittent device G in st. col. switch unit 7

↓

Not OK

Bridge the AB/LR coloured cables at the hazard warning lights switch 23	OK	Restore continuity of LR coloured cable btwn switch 23 & st. col. switch unit 7
Not OK		
Bridge LR coloured cable with A/AN coloured cables at connector B of hazard warning lights switch 23	OK	Overhaul or replace the hazard warning lights switch 23

Left branch of direction indicators/hazard w/lights not working operated by st. col. switch unit

Bridge the LR/A coloured cables at connector C of st. col. switch unit 7	OK	Overhaul or replace direction indicators switch H or overhaul and replace st. col. switch unit 7
Not OK		
With the lights on, check for intermittent voltage at the A coloured cable at connector C of the st. col. switch unit 7	OK	Restore the continuity of the A coloured cable btwn st. col. switch unit 7 & junction unit 4, connector H pin 5

Right branch of direction indicators/hazard w/lights not working operated by st. col. switch unit

Bridge LR/AN coloured cables at connector C of st. col. switch unit 7	OK	Overhaul or replace direction indicators switch H or overhaul or replace st. col. switch unit 7
Not OK		
With the lights on, check for intermittent voltage at the AN coloured cable at connector C of st. col. switch unit 7	OK	Restore the continuity of the AN coloured cable btwn st. col. switch unit 7 & junction unit 4, connector H pin 8

4F345N

Copyright by Fiat Auto

55D.

Left branch of direction indicators/hazard w/lights not working operated by hazard w/lights switch

Bridge the LR/A coloured cables at connector B of the hazard warning lights switch 23 → OK → Overhaul or replace the hazard warning lights switch 23

↓

Not OK

↓

With the lights on, check for intermittent voltage at the A coloured cable at connector B of the hazard warning lights switch 23 → OK → Restore the continuity of the A coloured cable btwn switch 23 & junction unit 4, connector H pin 6

Right branch of direction indicators/hazard w/lights not working operated by the hazard w/lights switch

Bridge the LR/AN coloured cables at connector B of the hazard warning lights switch 23 → OK → Overhaul or replace the hazard warning lights switch 23

↓

Not OK

↓

With the lights on, check for intermittent voltage at the AN coloured cable at connector B of the hazard warning lights switch 23 → OK → Restore the continuity of the AN coloured cable btwn switch 23 & junction unit 4, connector H pin 3

The left front and side direction indicators are not working

With the lights on, check for intermittent voltage at the AN coloured cable connector D pin 4 of the junction unit 4 → Not OK → Overhaul the junction unit 4

↓

OK

↓

4F346N

With the lights on, check for intermittent voltage at the AN coloured cable of the left front light cluster 1	Not OK	Restore the continuity of the AN coloured cable btwn junction unit 4 & light cluster 1

The right front and side direction indicators are not working

With the lights on, check for intermittent voltage at the A coloured cable connector D pin 15 of the junction unit	Not OK	Overhaul the junction unit 4

OK

With the lights on, check for intermittent voltage at the A coloured cable of the right front light cluster 2	Not OK	Restore the continuity of the A coloured cable btwn junction unit 4 & right front light cluster 2

The left front direction indicator is not working

Check the condition of the bulb	Not OK	Replace the bulb

OK

Check the condition of the bulb holder	Not OK	Overhaul or replace the bulb holder

OK

Copyright by Fiat Auto

55D.

↓

Bridge the N coloured cable at the left front light cluster 1, connector B with an earth	➡	OK	➡	Restore the continuity of the N coloured cable btwn left front light cluster 1 & left front earth 8

↓

Not OK

↓

With the lights on, check for intermittent voltage at the AN coloured cable for the left front light cluster 1, connector B	➡	Not OK	➡	Restore the continuity of the AN coloured cable btwn light cluster 1 & junction unit 4, connector D pin 4

The right front direction indicator is not working

Check the condition of the bulb	➡	Not OK	➡	Replace the bulb

↓

OK

↓

Check the condition of the bulb holder	➡	Not OK	➡	Overhaul or replace the bulb holder

↓

OK

↓

Bridge the N coloured cable at right front light cluster 2, connector B with an earth	➡	OK	➡	Restore the continuity of the N coloured cable btwn right front light cluster 2 & right front earth 9

↓

Not OK

With the lights on, check for intermittent voltage at the A coloured cable for right front light cluster 2, connector B → Not OK → Restore the continuity of the A coloured cable btwn light cluster 2 & junction unit 4, connector D pin 15

The left front side direction repeater is not working

Check the condition of the bulb → Not OK → Replace the bulb

OK

Check the condition of the bulb holder → Not OK → Overhaul or replace the bulb holder

OK

Bridge the N coloured cable at left front repeater 20 with an earth → OK → Restore the continuity of the N coloured cable btwn repeater 20 & left front earth 8

Not OK

With the lights on, check for intermittent voltage at the AN coloured cable at the left front repeater 20 → Not OK → Restore the continuity of the AN coloured cable btwn repeater 20 & junction unit 4, connector D pin 4

The right front side direction repeater is not working

Check the condition of the bulb → Not OK → Replace the bulb

4F349N

Copyright by Fiat Auto

55D.

↓

OK

↓

Check the condition of the bulb holder → Not OK → Overhaul or replace the bulb holder

↓

OK

↓

Bridge the N coloured cable at the right front repeater 21 with an earth → OK → Restore the continuity of the N coloured cable between repeater 21 & right front earth 9

↓

Not OK

↓

With the lights on, check for intermittent voltage at the A coloured cable at the right front repeater 21 → Not OK → Restore the continuity of the A coloured cable btwn repeater 21 & junction unit 4, connector D pin 15

The left rear direction indicator is not working

Check the condition of the bulb → Not OK → Replace the bulb

↓

OK

↓

Check the condition of the bulb holder → Not OK → Overhaul or replace the bulb holder

↓

OK

↓

With the lights on, check for intermittent voltage at the AN coloured cable of the left rear light cluster 16 → OK → Overhaul or replace the light cluster 16

↓

4F350N

Not OK

With the lights on, check for intermittent voltage at the AN coloured cable connector E pin 7 of the junction unit 4 → OK → Restore the continuity of the AN coloured cable btwn junction unit 4 connector E & light cluster 16

Not OK

Check the condition of the junction unit 4 → Not OK → Overhaul or replace the control unit 4

The right rear direction indicator is not working

Check the condition of the bulb → Not OK → Replace the bulb

OK

Check the condition of the bulb holder → Not OK → Overhaul or replace the bulb holder

OK

With the lights on, check for intermittent voltage at the A coloured cable of the right rear light cluster 17 → OK → Overhaul or replace the light cluster 17

Not OK

Copyright by Fiat Auto

55D.

With the lights on, check for intermittent voltage at the A coloured cable connector G pin 5 of the junction unit 4 → OK → Restore the continuity of the A coloured cable btwn junction unit 4 connector G & light cluster 17

↓

Not OK

↓

Check the condition of the junction unit 4 → Not OK → Overhaul or replace the junction unit 4

The left direction indicators warning light is not working

With the lights on, check for intermittent voltage at the AN coloured cable at connector B pin 11 of the instrument panel 6 → OK → Replace the warning light in question in the instrument panel 6, or overhaul the instrument panel 6

↓

Not OK

↓

With the lights on, check for intermittent voltage at the AN coloured cable of connector H pin 1 of the junction unit 4 → OK → Restore the continuity of the AN coloured cable btwn control unit 4 connector H & instrument panel 6 connector B

↓

Not OK

↓

Check the condition of the junction unit 4 → Not OK → Overhaul the junction unit 4

The right direction indicators warning light is not working

With the lights on, check for intermittent voltage at the A coloured cable at connector B pin 10 of the instrument panel 6 → OK → Replace the warning light in question in the instrument panel 6, or overhaul the instrument panel 6

↓

4F352N

Not OK

With the lights on, check for intermittent voltage at the A coloured cable of connector H pin 7 of the junction unit 4 → OK → Restore the continuity of the A coloured cable btwn control unit 4 connector H & instrument panel 6 con. B

Not OK

Check the condition of the junction unit 4 → Not OK → Overhaul the junction unit 4

The hazard warning lights warning light is not working

Bridge the N coloured cable at connector A of the hazard warning lights switch 23 → OK → Restore the continuity of the N coloured cable btwn hazard warning lights switch 23 & earth 22

Not OK

Check the condition of the hazard warning lights w/-light A in the hazard w/light switch 23 → Not OK → Replace the warning light A

Not OK

Check the condition of the hazard w/light switch 23 → Not OK → Overhaul or replace the switch 23

Copyright by Fiat Auto

55D.

Both the reversing lights are not working

Check the condition of the fuse 1 in the junction unit 4 → Not OK → Check for a short circuit in the system and replace the fuse 1

↓

OK

↓

Bridge the AR/BN coloured cables at connector 55 → OK → Restore the continuity for oneof the AR/BN coloured cables btwn connector 55 & reversing switch 159, or replace reversing lights switch 159

↓

Not OK

↓

Bridge the AR/B coloured cables for connector D pin 14 & 9 of the junction unit 4 → OK → Restore the continuity for one of the AR/B coloured cables btwn junction unit 4 connector D & connector 55

↓

Not OK

↓

With the ignition on, check for voltage at the AR cable connector A pin 14 of the junction unit 4 → Not OK → Overhaul the junction unit 4

↓

OK

↓

Bridge pin 9 connector D with pin 6 (7) connector G of the junction unit 4 with a cable → OK → Overhaul the junction unit 4

The left reversing light is not working (Marea only)

Check the condition of the bulb → Not OK → Replace the bulb

↓

OK

4F354N

Check the condition of the bulb holder	Not OK	Overhaul or replace the bulb holder

OK

With reverse engaged, check for voltage at the BN coloured cable for the left rear light cluster 16	OK	Overhaul or replace the light cluster 16

Not OK

With reverse engaged, check for voltage at the BN coloured cable connector G pin 6 of the junction unit 4	OK	Restore the continuity for the BN coloured cable btwn junctino unit 4 connector G and light cluster 16

Not OK

Check the condition of the junction unit 4	Not OK	Overhaul the junction unit 4

The right reversing light is not working

Check the condition of the bulb	Not OK	Replace the bulb

OK

Check the condition of the bulb holder	Not OK	Overhaul or replace the bulb holder

4F355N

Copyright by Fiat Auto

55D.

OK

With reverse engaged, check for voltage at the B coloured cable of the right rear light cluster 17 → OK → Overhaul or replace the light cluster 17

Not OK

With reverse engaged, check for voltage at the B coloured cable connector G pin 7 of the junction unit 4 → OK → Restore the continuity of the B coloured cable btwn junction unit 4 connector G & light cluster 17

Not OK

Check the condition of the junction unit 4 → Not OK → Overhaul the junction unit 4

The braking lights are not working

On versions equipped with a Check Panel, the break in the wiring or the failure of the bulb for one of the two side brake lights - NOT the additional one is signalled but a general supply failure, analyzed later, is not identified

Check the condition of the fuse 1 in the junction unit 4 → Not OK → Check for a short circuit in the system and replace the fuse 1

OK

Bridge the AR/RN coloured cables at brake lights control switch 40 → OK → Overhaul or replace the switch 40

Not OK

Bridge the AR/RN coloured cables at connectors D pin 5 & 18 of the junction unit 4 → OK → Restore the continuity for the AR/RN coloured cables btwn junction unit 4, connector D & brake lights switch 40

Not OK

4F356N

With the ignition on, check for voltage at the AR cable connector D pin 5 of the junction unit 4	Not OK	Overhaul the junction unit 4
OK		
Using a cable, bridge pin 18 connector D and pins 12, 13 e 14 - versions without Check Panel - or pins 1, 3, 14 - versions with Check Panel - connector E of the junction unit 4	OK	Overhaul the junction unit 4
Not OK		
Only versions with Check Panel: Using a cable bridge pin 18 connector D & pin 9 connector H of the junction unit 4	OK	Overhaul the junction unit 4
Not OK		
With the pedal pressed, check for voltage at pin 3, connector C of the Check Panel in the instrument panel 6	Not OK	Restore the continuity for the RV coloured cable between connector C of panel 6 & junction unit 4, connector H pin 9

The left brake light is not working

Check the condition of the bulb	Not OK	Replace the bulb
OK		
Check the condition of the bulb holder	Not OK	Overhaul or replace the bulb holder
OK		

4F357N

Copyright by Fiat Auto

55D.

With the pedal pressed, check for voltage at the RG coloured cable of the left rear light cluster 16 → OK → Overhaul or replace the light cluster 16

↓

Not OK

↓

With the pedal pressed, check for voltage at the RG coloured cable connector E pin 12 - versions without Check Panel - or pin 3 - versions with Check Panel - of the junction unit 4 → OK → Restore the continuity of the RG coloured cable btwn junction unit 4, connector E & light cluster 16

↓

Not OK

↓

Only versions with Check Panel
With the pedal pressed, check for voltage at pin 9, connector C of the Check Panel in the instrument panel 6 → Not OK → Restore the continuity of the RG coloured cable btwn connector C of panel 6 & junction unit 4, connector J pin 1

The right brake light is not working

Check the condition of the bulb → Not OK → Replace the bulb

↓

OK

↓

Check the condition of the bulb holder → Not OK → Overhaul or replace the bulb holder

↓

OK

↓

With the pedal pressed, check for voltage at the RN coloured cable of the right rear light cluster 17	➡	OK	➡	Overhaul or replace the light cluster 17

Not OK

With the pedal pressed, check for voltage at the RN coloured cable connector E pin 13 - versions without Check Panel - or pin 1 - versions with Check Panel - of the junction unit 4	➡	OK	➡	Restore the continuity for the RN coloured cable btwn junction unit 4, connector E & light cluster 17

Not OK

Only Versions with Check Panel With the pedal pressed, check for voltage at pin 10, connector C of the Check Panel in the instrument panel 6	➡	Not OK	➡	Restore the continuity for the RN coloured cable btwn connector C of the instrument panel 6 & junction unit 4, connector H pin 4

Copyright by Fiat Auto

page

INTRODUCTION
- Introduction 1

SAFETY
- Passive safety 2
- Seats 6
- Protection against fire 8

ECOLOGY AND THE ENVIRONMENT
- Recyclability of materials 9
- Thermoplastic and thermosetting materials 11

BODYSHELL
- Protective treatments 12
- Painting 14
- Sound-proofing 15
- Impact diagnosis 18
- Diagram for checking underbody 19
- Typical measurements 20

REPLACING BODY PANELS
- Graphic index for external panels 28
- Graphic index for structural panels 29
- Warnings for operators 30
- Accident prevention measures 30
- Warnings for replacements 31
- Warnings for welding 31
- General instructions for repairs 32
- Symbols 37
- Front wing 38
- Rear wing (Weekend) 40
- Rear wing and wheel arch (Saloon) 49
- Side member and underdoor reinforcement 56
- Roof 63
- Rear light cluster housing (Saloon) 67
- Rear light cluster housing (Weekend) 71
- Rear cross member cover (Saloon) 75
- Rear cross member cover (Weekend) 79
  Partial rear cross member cover 82/1
- Rear floor and side members 83
- Front cross member 91
- Complete front panel 95
- Partial front panel 101
- Front pillar 106
- Centre pillar 110

Copyright by Fiat Auto

INTRODUCTION

This collection of technical information is designed to support the FIAT training programme for the new models - the Marea (4 door) and the Marea Weekend (5 door). On the basis of company expectations, the new vehicle will consolidate the goals (comfort, practicalness, robustness) already achieved by the Bravo and Brava models.
The subjects, above all, deal with the technical innovations, giving priority to descriptions and training.

The profile of the vehicle has an optimum "CX" (drag) factor which multiplied by the surface area gives the results indicated in the table.

	Marea	Marea Weekend
AERODYNAMIC COEFFICIENT (CX)	0,33	0,32
AREA AERODYNAMIC COEFFICIENT (CX x S)	0,67	0,65

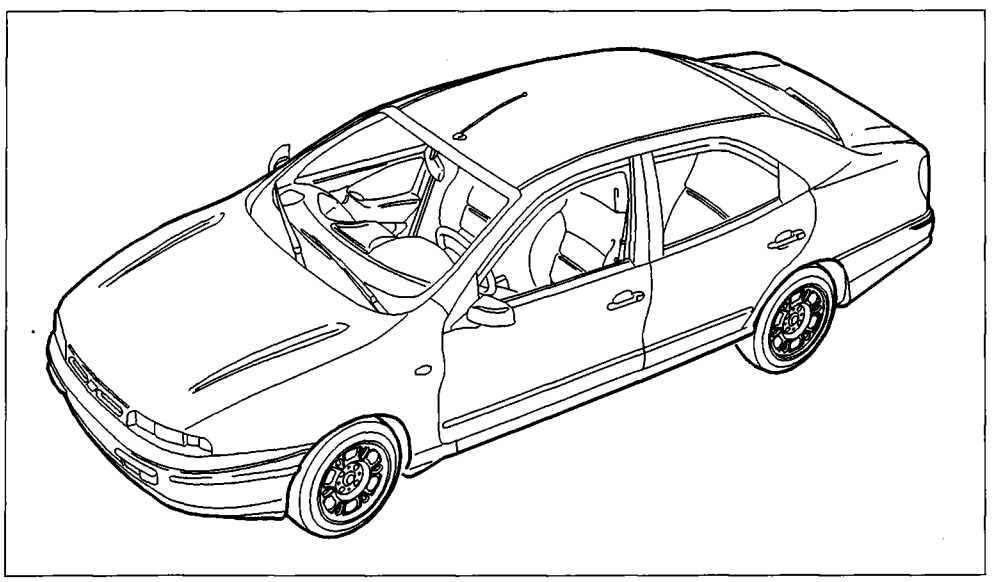

P4F01BM01

Marea

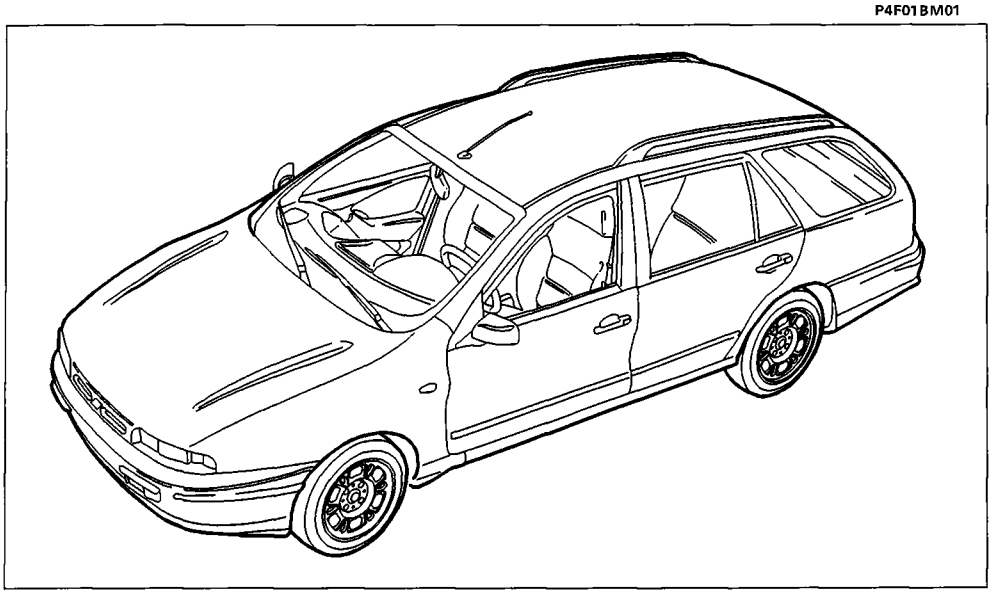

P4F01BM02

Marea Weekend

Copyright by Fiat Auto

PASSIVE SAFETY

The outstanding achievements in the design of the product have led to exceptional results, above all, in the area of passive safety. The bodyshell has been design to crumple in a controlled manner in the case of front, side or rear impacts and absorb the energy produced by the impact without affect the vital space of the passenger compartment, where a survival chamber will remain intact. This structure allows good resistance against the forces and distortions deriving from the difficult situations in which the vehicle may find itself.
The bending and torsional rigidity of the Marea bodyshell, in addition to guaranteeing the vehicle exceptional passive resistance qualities, create a sensation of solidness and, more generally, comfort, maintaining the correct suspension angles and offering precise driving. If we subject the bodyshell to a torsional force (A) of 1035 kgm, it only tends to bend a degree. Likewise, it tends to yield 1 mm when a bending force (B) of 500 kg is applied.
These are high rigidity values which translate into multiple advantages:
- less vibrations
- less noise
- better driveability
- improved resistance to the breakages caused by the use of the vehicle on unmade roads.
- sensation of compactness of the vehicle
- improved maintenance in time of the overall qualities of the vehicle.

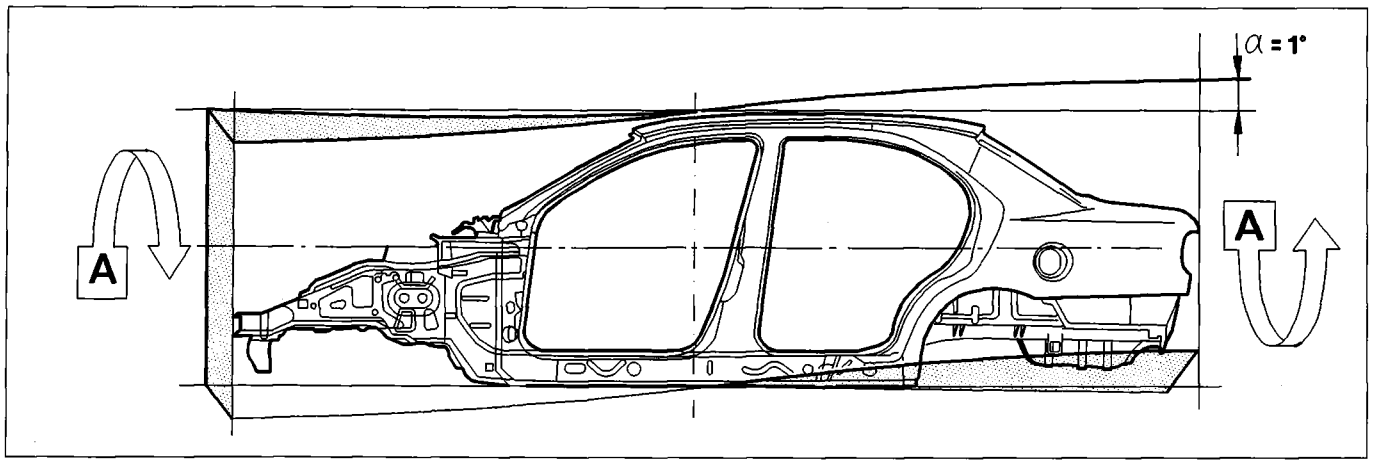

P4F02BM01

Torsional rigidity

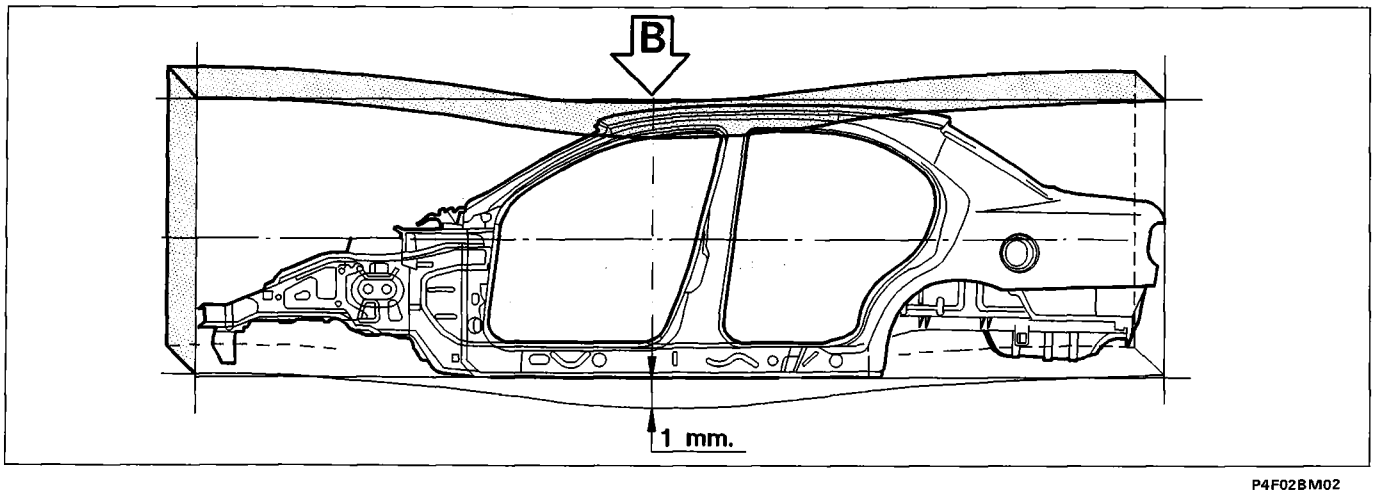

P4F02BM02

Bending rigidity

		Marea	Marea Weekend
TORSIONAL RIGIDITY (kgm/degree)	Stripped bodyshell	1035	-
	Bodyshell complete with moveable parts	1744	1308
BENDING RIGIDITY (kg/mm)	Stripped bodyshell	550	545
	Bodyshell complete with moveable parts	660	-

The table contains the torsional and bending rigidity figures for the bodyshell both stripped and complete with moveable parts.

Main passive safety system features

In order to pass the various legislative tests (EEVC '96), the passive safety features of the model ensure that the damage is limited and the consequent repair times are therefore reduced.

The regulations involve impact resistance in its widest forms:

- Resistance to offset frontal impacts at high speed with the standard model without an Air Bag (ECE/EEVC '98) and with an Air Bag (test AMUS/ADAC and USA 208 standard).
- Resistance to reinforced dynamic side impacts (ECE/EEVC '96).
- Resistance to rollover (USA 216).
- Rear load intrusion resistance (ECE 34).
- Protection against fire.

Copyright by Fiat Auto

70.

Resistance to frontal impacts

The bodyshell has reinforcements at the key points for resistance to frontal impact - left side (A.M.U.S. regulation USA 208):
- bonnet retaining hooks (detail A)
- high rigidity dashboard cross member (2)
- reinforcements to the floor panel (3), side members (4) and front pillar (5)

In the 15 km/h test against a fixed barrier at zero degress (Allianz-German Insurers tests), the design ensures that there are no distortions to the roof panel and that the bonnet lid and the front wings do not cause damage to the windscreen.

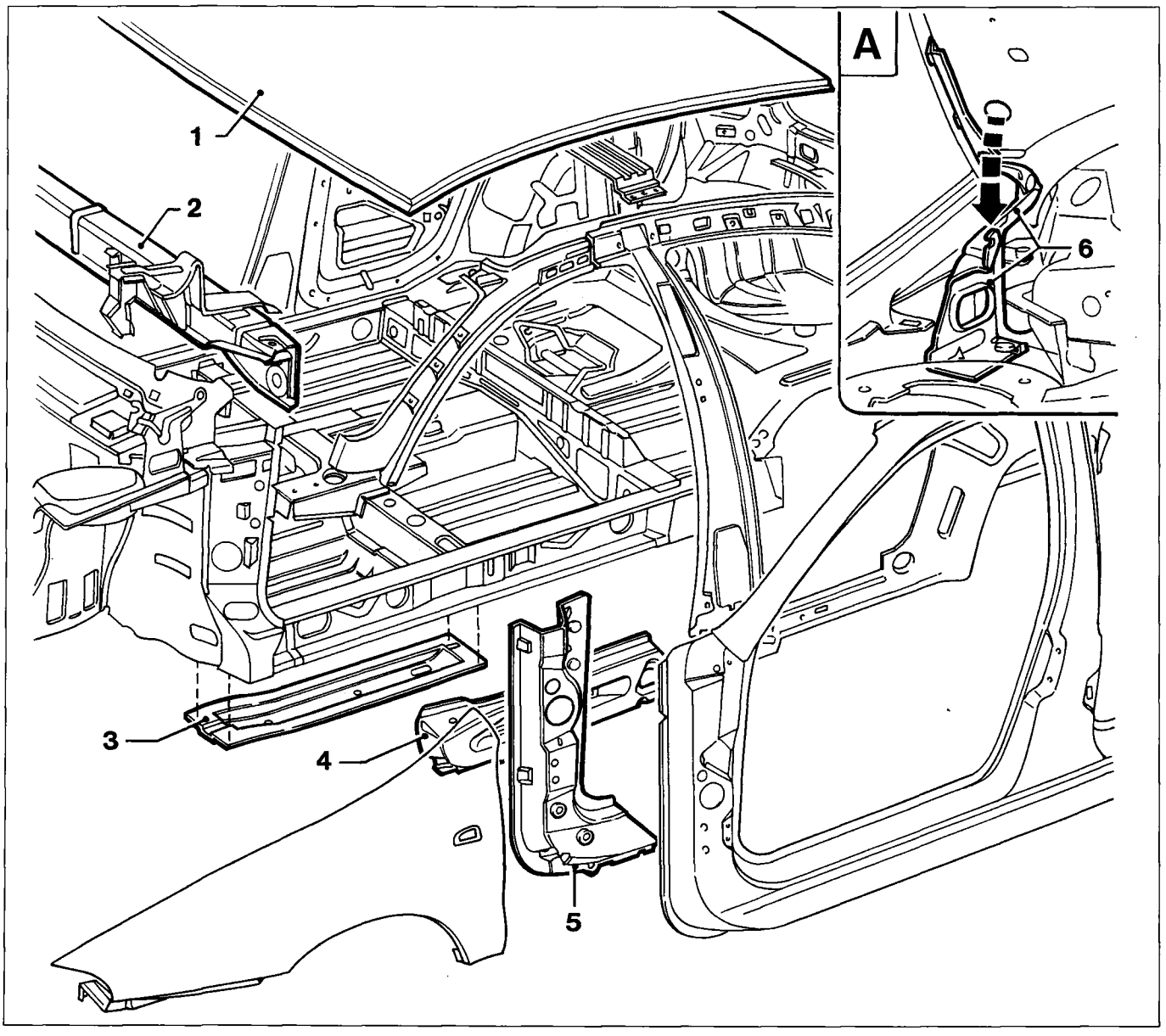

P4F04BM01

1. Roof
2. Dashboard cross member
3. Floor panel reinforcement
4. Side member reinforcement
5. Front pillar reinforcement
6. Bonnet hinges

NOTE *In the case of operations to the bodyshell, if distorted, the structural reinforcements shown in the diagram, are always replaced.*

Resistance to side impacts

The centre pillar is laterally reinforced in several places: along its ensire development (1), at the seat belt mountings (2) and the lock (3). In addition, in the case of the vehicle overturning, the safety is guaranteed by the structure of the roof panel with its high resistance and, in the five door version, the central cross member (4) which joins the two side pillars.

The doors are fitted with high resistance tubular reinforcements (5) and upper side members (6) which act in conjunction with an already particularly rigid structure and are firmly secured to the bodyshell by high resistance hinges and anti-tamper locks.

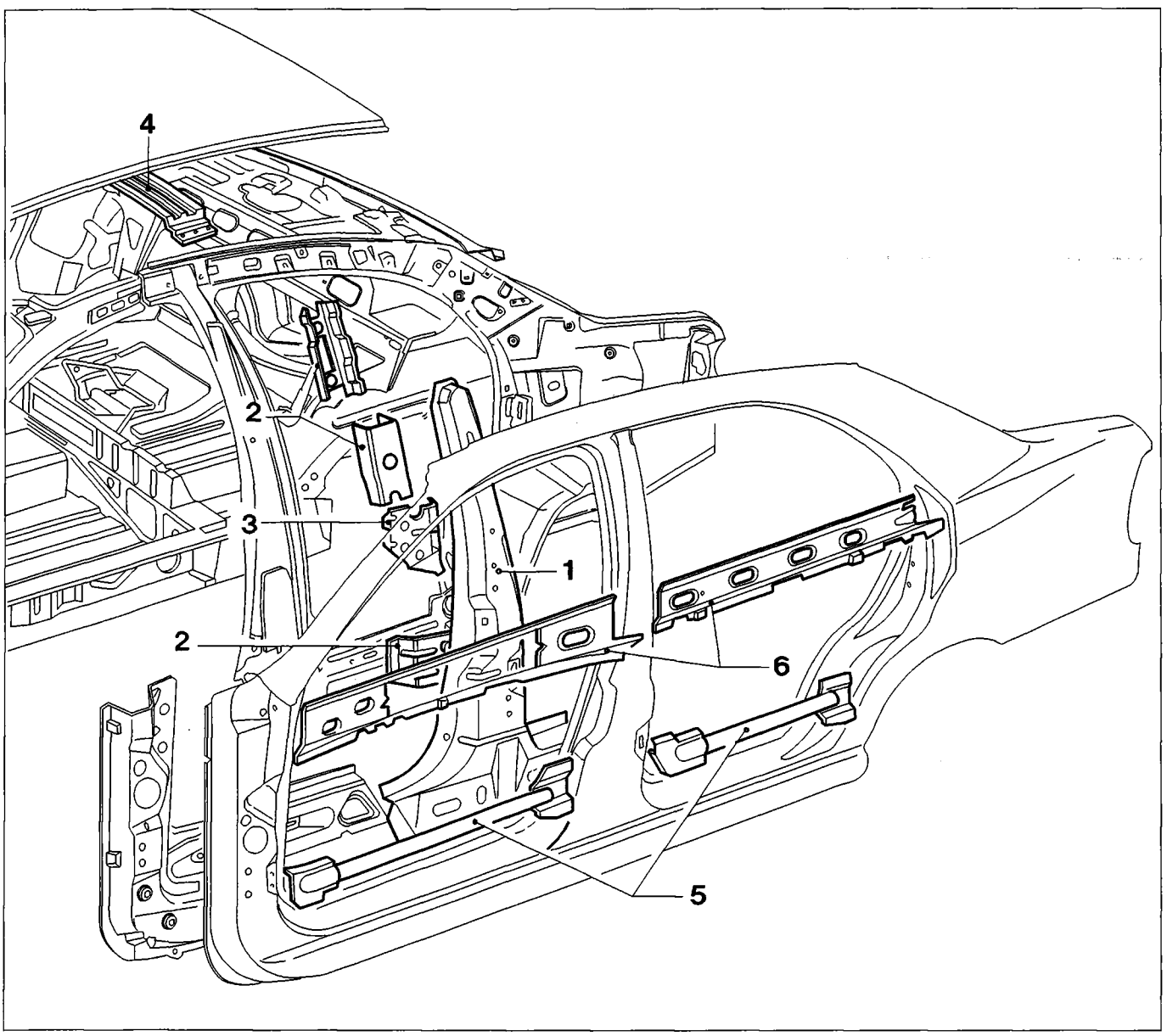

P4F05BM01

1. Centre pillar reinforcement
2. Seat belt mounting reinforcements
3. Lock reinforcement
4. Roof panel cross member
5. Rear door tubular reinforcements
6. Door structure reinforcements

NOTE *In the case of operations to the bodyshell, if distorted, the structural reinforcements indicated in the drawing, are always replaced.*

Copyright by Fiat Auto

SEATS

To safeguard the integrity of the passenger compartment and consequently that of the passengers, safety devices have been adopted for the front and rear seats. The structure of all the seat cushions is equipped with an anti-submarining effect. In addition, the shape of the head restraints ensure they are fully effective. The parts with the greatest innovative safety features are to be found in the backrest.

Front seats

In the case of a rear impact at 50 km/h, the rear seats are designed to yield structurally (see fig. A). Thanks to the presence of a slot (1), the frame tends to bend backwards and absorb part of the impact, without causing damage to the rear passengers.

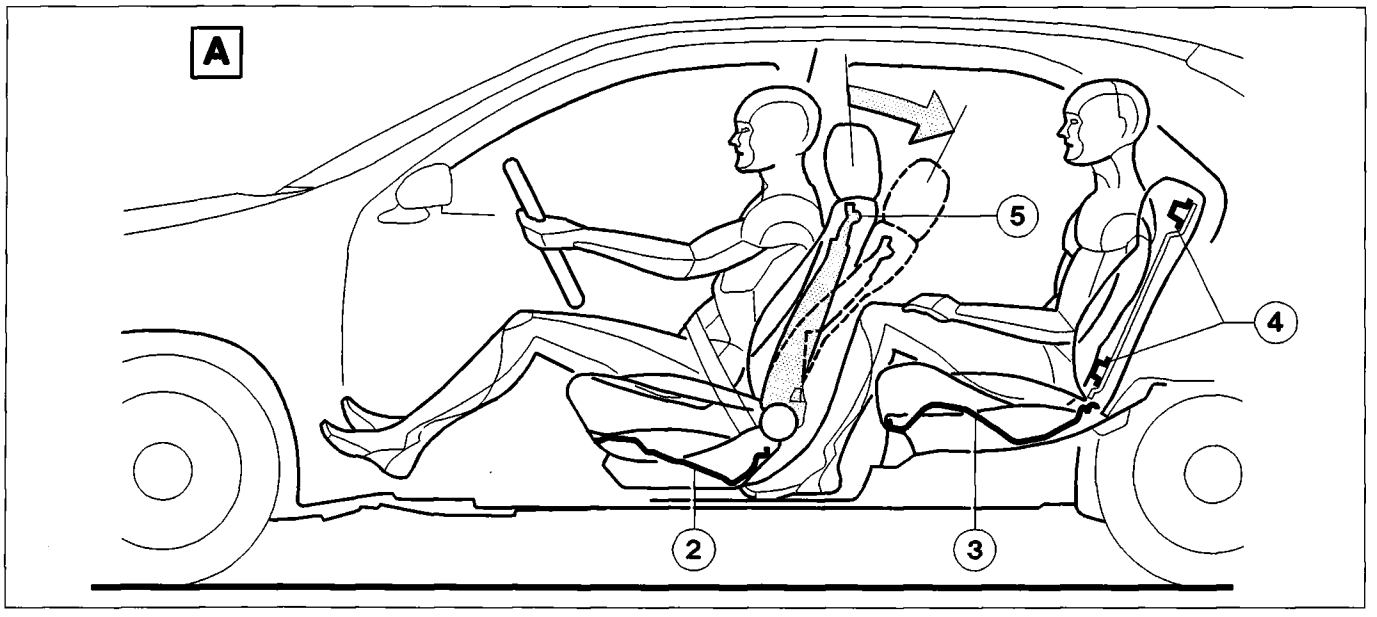

P4F06BM01

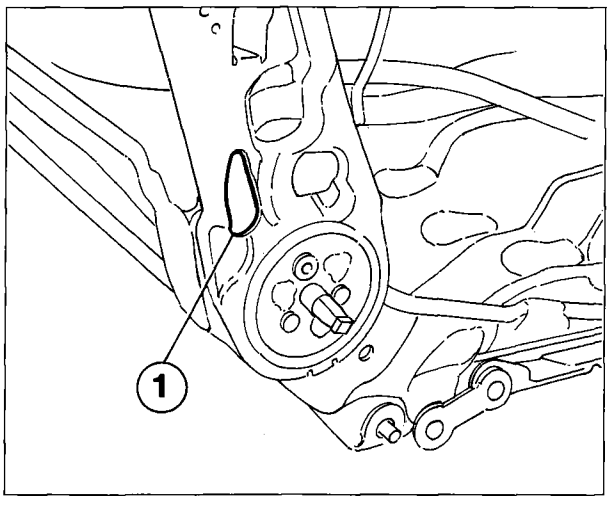

P4F06BM02

1. Slot for backrest yielding;
2. Front anti-submarining cushion;
3. Rear anti-submarining cushion;
4. Anti-intrusion bars;
5. Collapsible backrest.

Rear seats

The backrests for the rear seats are made from sheet metal and are reinforced by two high resistance cross members (1). Regulation ECE 2 provides for a structural resistance with deformation of below 30 cm at an impact of 36 km/h with a load of two suitcases weighing 18 kg.
The Marea's reinforcements meet these conditions with a load of 25 kg at a speed of 50 km/h.

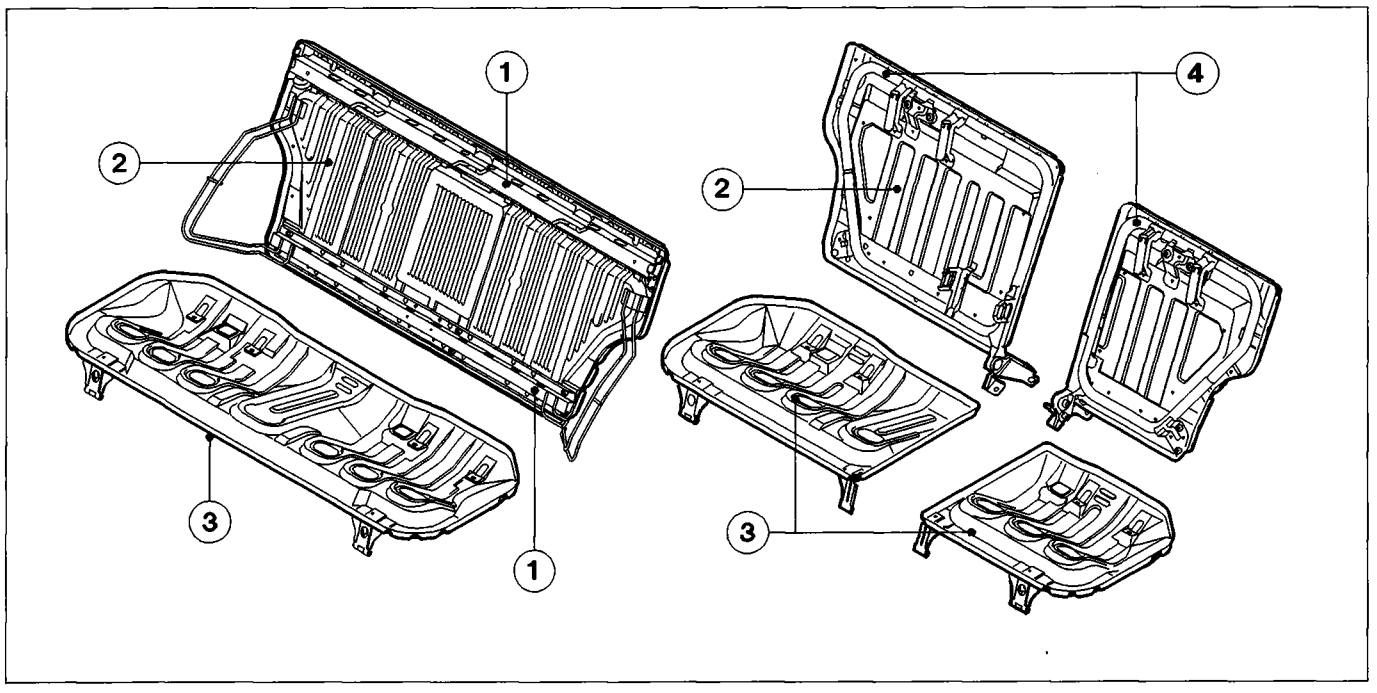

P4F07BM01

Marea rear seat

1. Anti-intrusion bars
2. Sheet metal backrest
3. Anti-submarining cushion
4. Reinforcement tubes

Marea Weekend rear seat

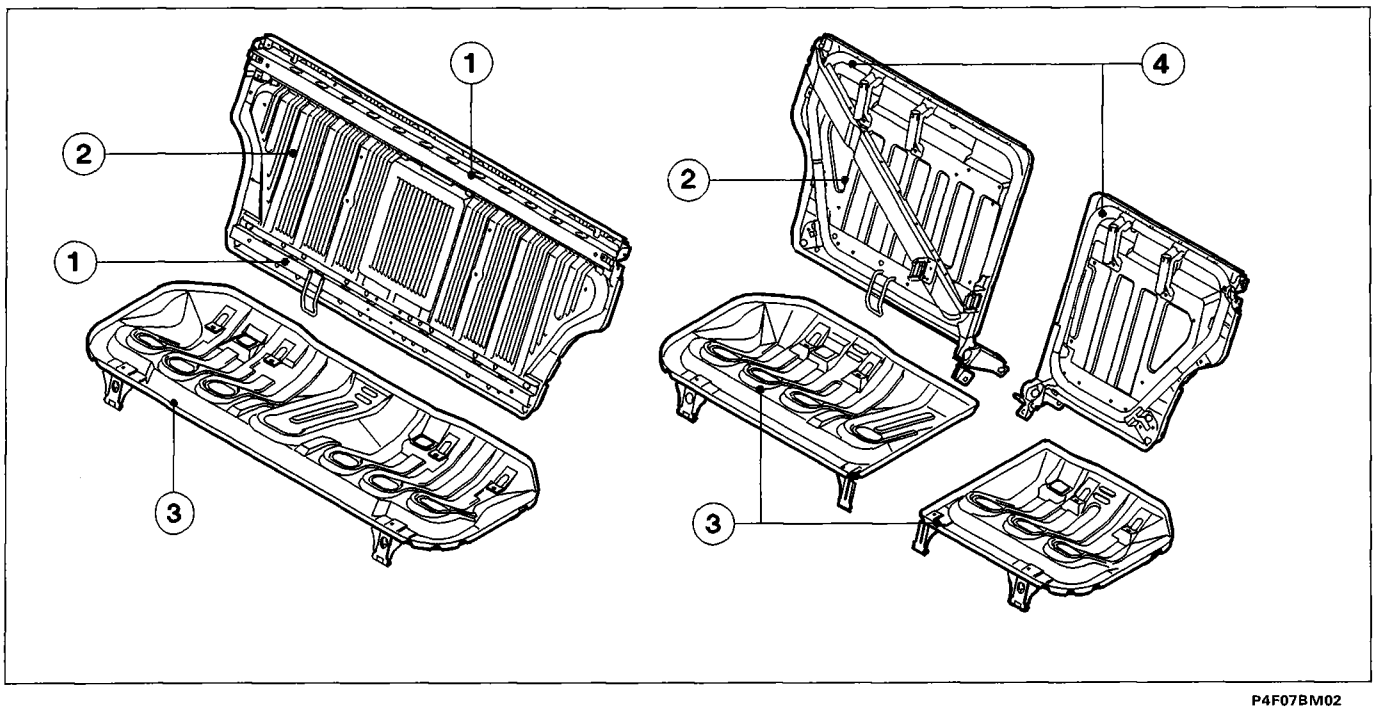

P4F07BM02

PROTECTION AGAINST FIRE

The collection of measures designed to protect the vehicle against fire (FPS) after an impact consist of:

- the adoption of metal fuel pipes behind the engine exhaust;
- the fitting of an inertia switch (detail A) to cut off the flow of fuel. The system includes the fuel pump cut off and the single-acting valve on the appropriate pipe;
- the introduction of an automatic release system for the doors in the case of an impact, for all versions fitted with central locking;
- screened electric cables fitted with protective fuses;
- anti-misfiring shields (1) on the exhaust system;
- fire-proof interior fittings.

In addition, in order to reduce the risk of damage to the fuel tank (in accordance with regulation ECE 2) with the consequent escape of inflammable liquid, in the case of an impact the design makes provision for the partial release of the tank from the underbody.

The anchorage tabs (2) have a more restrained section (see drawing) designed to break in the case of a collision. In this way the tank (3) remains suspended from the vehicle by means of the anchorage bands (4), but is free from any compressions or breakage due to the impact.

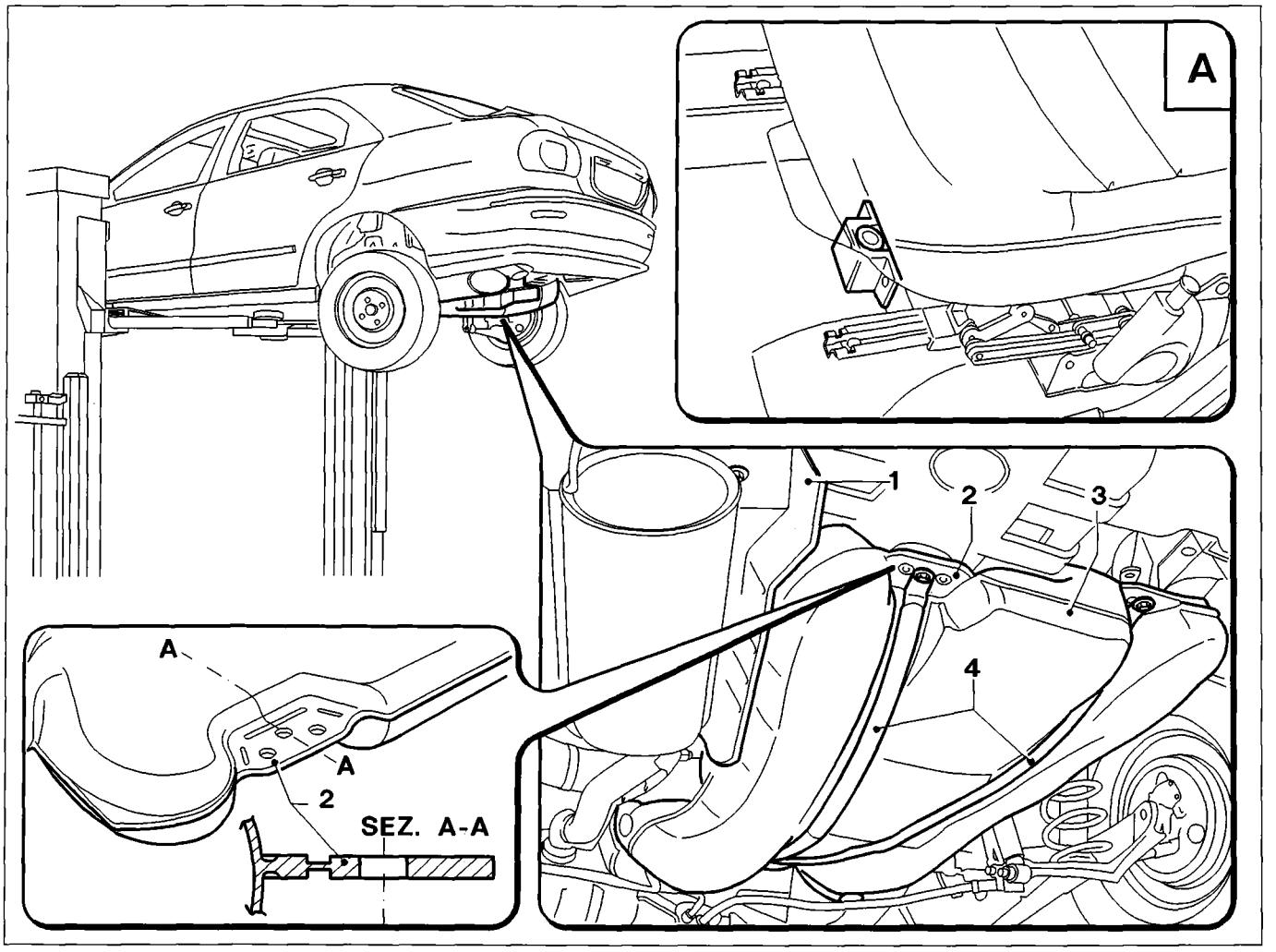

P4F08BM01

NOTE *In the case of a collision, always check the condition of the tank achorage tabs (2).*

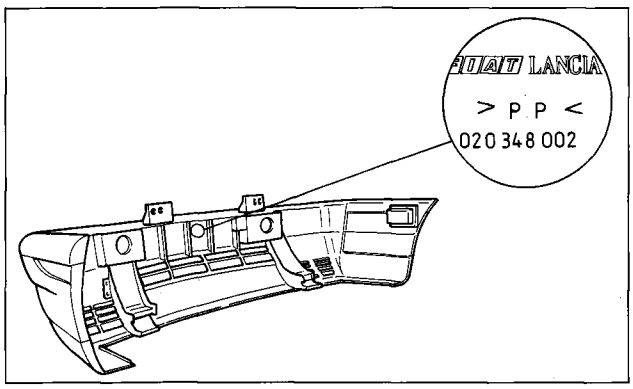

P4F09BM01

RECYCLABILITY OF MATERIALS

Solving the problem of recycling plastic materials is born in the design stage. During this state the possibility of reusing the material for future components should be evaluated.

Currently only the metal parts of vehicles which reach "the end of their life" are recovered to produce new steel and new aluminimum castings.
All of the remaining parts of vehicle, which correspond to around 25% of the weight, are abandonned or eliminated.
This means that an enormous amount of materials and energy are wasted as well as contributing to increasing the size of the problem of the disposal of solid waste.

This model has been designed so that all of its plastic and elastomer (rubber) components weighing more than 50 grams are marked with coded symbols thereby allowing the material to be recognized during the recycling stage and ensuring that all components are recyclable.

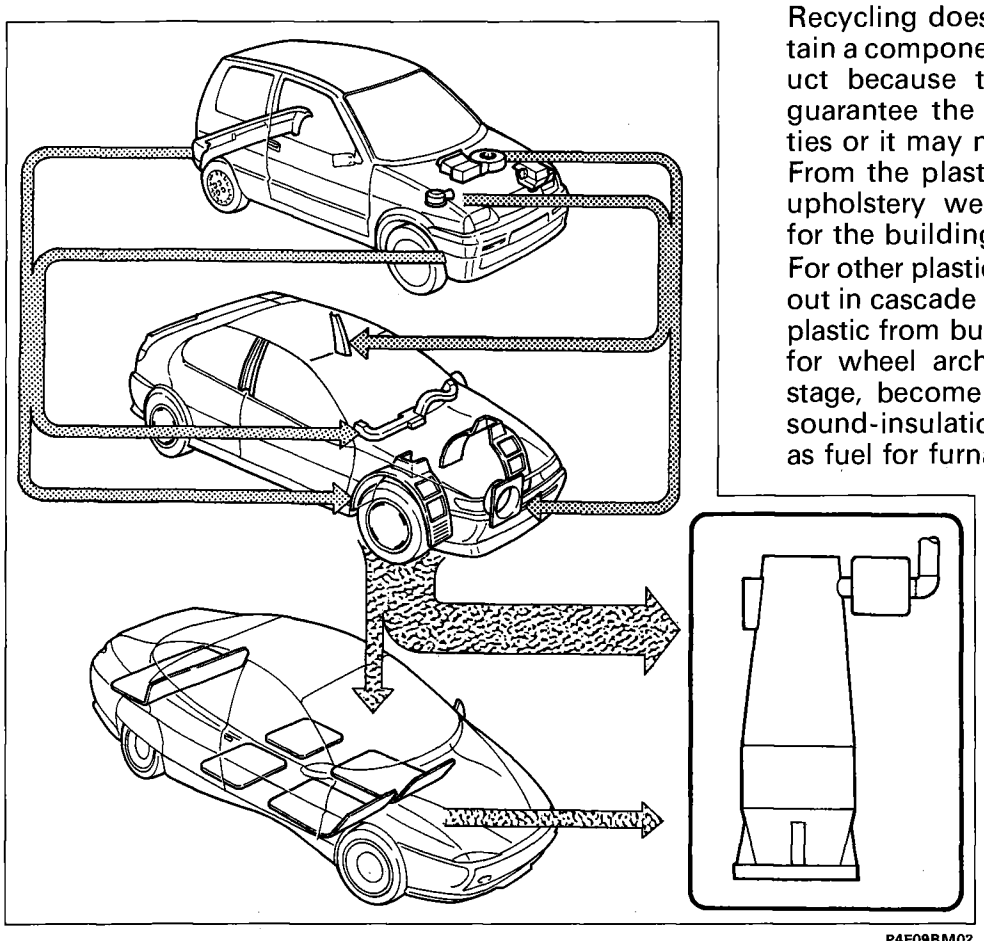

P4F09BM02

Recycling does not make it possible to obtain a component equal to the starting product because the material can no longer guarantee the necessary reliability properties or it may no longer be suitable.
From the plastics which make up the seat upholstery we obtain insulating materials for the building industry.
For other plastic materials recycling is carried out in cascade fashion: for example from the plastic from bumpers we obtain the material for wheel arch linders which, in the next stage, become the elements for producing sound-insulation panels and finally end up as fuel for furnaces.

Recycling therefore involves three successive generations of vehicles, making a contribution to savings in raw materials.

Copyright by Fiat Auto

Bodyshell with recyclable materials

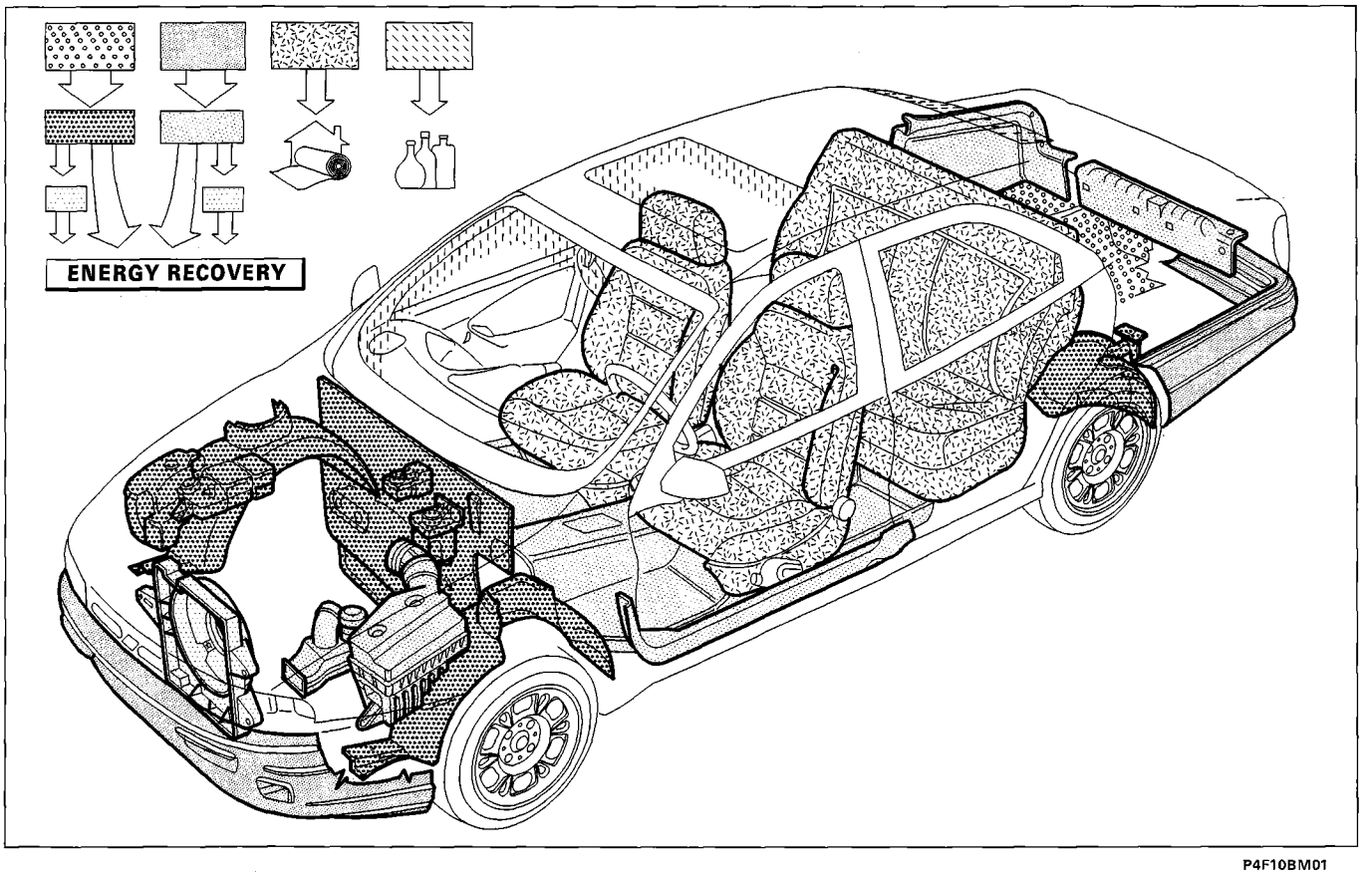

P4F10BM01

Harmful materials

In accordance with recent regulations, the following materials have been eliminated from the design of the Marea:

MATERIAL	APPLICATIONS	MAREA OBJECTIVE
Cadmium	- Coverings of nuts and bolts - Plastics and paints	Absent
CFC (chlorofluorocarbons)	- Seat upholstery - Plastic elements - Air conditioners	Absent
HCFC (hydrochlorofluorocarbons)	- Steering wheel - Gear lever knob	Absent
Asbestos	- Brake and clutch linings - Engine gaskets	Absent
Formaldehyde	- Porous sound-proofing, carpets, roof lining	⩽ 70 ppm
Beryllium oxide	- Electronic control units	Absent
Brominated fire-proof substances	- Additives for plastics/fabrics	Absent

THERMOPLASTIC AND THERMOSETTING MATERIALS

Below is a table with symbols and descriptions to allow the identification of materials.

This is designed to help the selection and use, in a service situation, of the most suitable products from those available on the market, for washing the interior, painting plastic materials, repairs, sticking, etc. The aim is to avoid possible damage from the use of products which are incompatible with one another.

	ISO SYMBOL	FAMILY NAME	
THERMOPLASTICS	AOS	ACRYLONITRYL -BUTADENE - STYRENE	
	CA	CELLULOSES	
	PA 6	POLYAMMIDES WITH;	6 atoms of C in a monomer structure
	PA 66		two monomer structures each with 6 atoms of C
	PA 11		11 atoms of C in a monomer structure
	PA 12		12 atoms of C in a monomer structure
	POTP	POLYESTERS	polybutylene
	PETP		polybutylene
	PC	POLYCARBONATES	
	PC + ABS	ALLOYS OF POLYCARBONATE/ABS	
	PE	POLYTHENES	
	PMMA	METACRYLICS	
	POM	ACETALS	
	PP	POLYPROPYLENES	
	PPOX	MODIFIED POLYPHENOL - OXIDES	
	PPOX + PA	THERMOPLASTIC ALLOYS (POLYPHENOL OXIDES/POLYAMMIDES)	
	PSE	POLYSTYRENES (EXPANDED)	
	PVC-P	FLEXIBLE VINYLS	
	PVC	RIGID VINYLS	
	SAN	STYRENES	Copolymer styrene - acrylonitryl
	SMA		Copolymer styrene - maleic anhydride
THRMHRD. MAT.	MF	MELAMMINES	
	PF	PHENOLS	
	PUR	POLYURETHANES	
	UF	URICS	
	UP	POLYESTERS UNSATURATES	for compression moulding (SMC)
		THERMOHARDNING MATERIALS	for injection moulding (BMC)

LOADS & REINFORCEMENTS

ISO SYMBOL	DESCRIPTION
GB	Balls of glass
GF	Glassfibre
GH	Glass matting
M	Minerals
T	Talc
WD	Wood chippings
SF	Textile fibres (synthetic or natural)

ELASTOMER MATERIALS

ISO SYMBOL	TYPE OF RUBBER
ACM	CHLOROETHYL-VINYL-ETHER-ACRYLATE
AU	POLYURETHANE
CSH	CHLOROSULPHANATE POLYTHENE
CR	CHLOROPRENE
EPDM	MONOMER ETHYLENE PROPYLENE DIENE
ECO	EPIHYDROCHLORINE
PM	CARBON FLUORIDE
MVQ	SILICON
NBR	ACRYLNITRYLBUTADIENE
NR	NATURAL ISOPRENE
IR	SYNTHETIC ISOPRENE
SBR	BUTADIENE STYRENE
IIR	ISOBUTYLENE/ISOPRENE

Copyright by Fiat Auto

PROTECTIVE TREATMENTS

Protective treatment

The choice of materials which make up the bodyshell is designed to achive an excellent standard of quality in order to offer a high quality product which is long lasting.
60% of the weight of the bodyshell is produced from galvanized steel panels. Of this 60%, 75% of it is twin galvanized.
As far as the outside panels are concerned, the figure for galvanized panels reaches 90%.
The galvanizing effect is produced by different technological processes:
- deposition through a galvanizing process; the panel is immersed or comes into contact with a bath, according to whether it is a twin or single galvanizing process, resulting in a high standard surface finish;
- fire deposition; the melted zinc is deposited thermally on the panel. This process, which is used mainly for structural elements of the bodyshell, produces thicknesses of up to 20 microns, compared with the 7 microns obtained with the galvanizing process.

The synthetic wheel arch liners also have anti-corrosion functions.

The protection of all the box sections is achived by using galvanized panels which, after painting, are sprayed internally with wax based oil to prevent internal oxidation.

The following areas of the bodyshell, felt to be the most critical, are also subject to treatment:
- Suspension mountings
- Tank mounting
- Exposed seat belt mounting
- Bodyshell/mechanical components connecting area

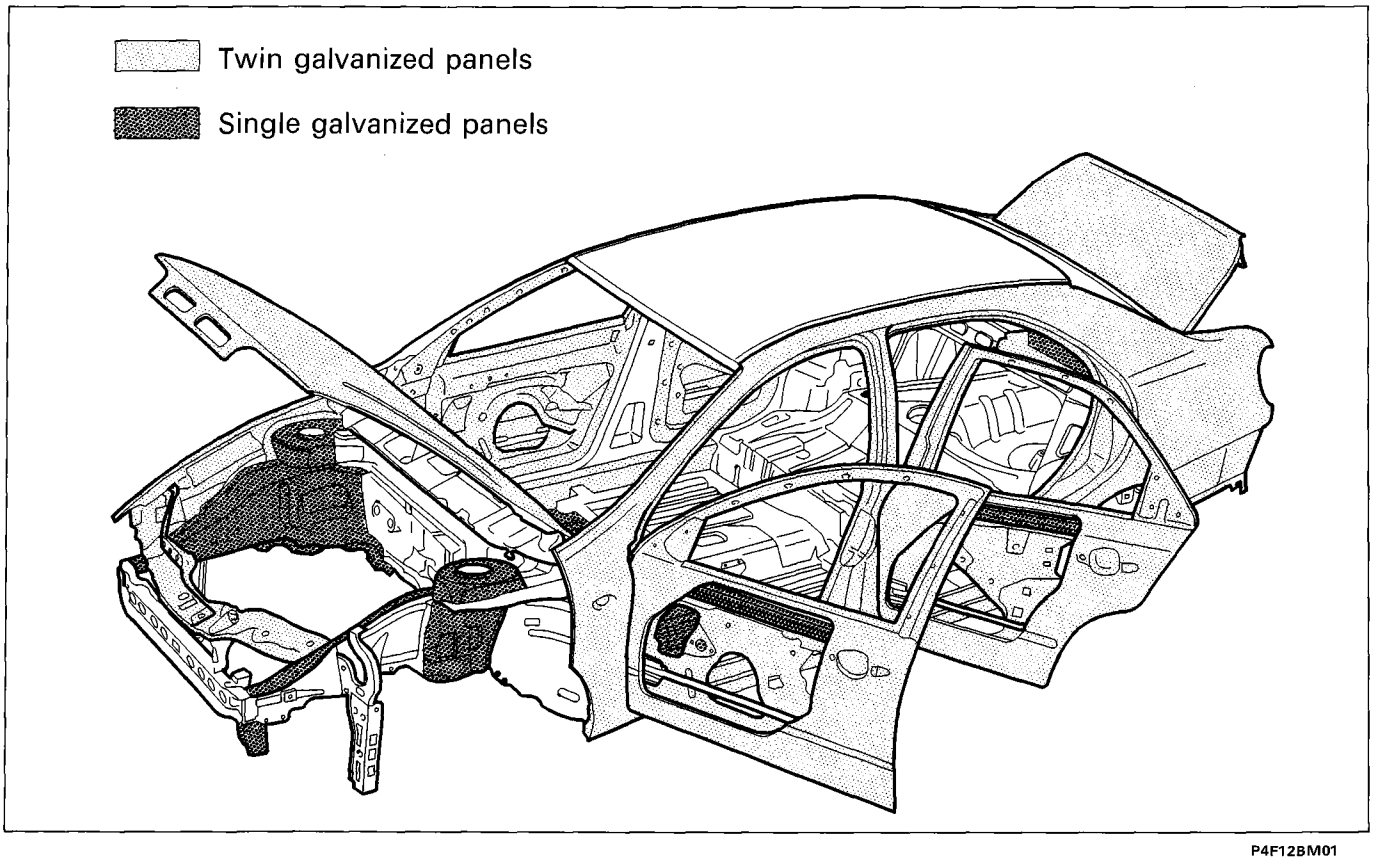

P4F12BM01

Panel preparation treatment (bonderization)

After assembly, the bodyshell undergoes a series of treatments which are designed to remove the greases and oxidation and preserve it from corrosion.
The cycle is made up of the following stages:

- Pre-degreasing: washing with an acid solution (de-oxidizing) to remove oily substances present on the panel.
- Degreasing: washing with a water-surface acting agents solution; this solution is sprayed at a temperature of around 60°C.
- Rinsing: industrial water is used to remove alkaline residues.
- Activation: washing at ambient temperature with a solution of titanium salts (highlighting "pickling" crystals).
- Phosphating: washing with zinc phosphates at a temperature of about 55°C; the electrolytic depositionof these metals constitutes and multiplies the crystalline centres creating an even and protective micro-crystalline layer on the bodyshell (hardening and tempering).
- Passivation: washing with a chrome based solution which affords a further protective layer and levelling of the crystals.
- Rinsing: using deionized water to remove the residues of the previous solutions.
- Drying: this takes place in an oven at a temperature of about 110°C.

Application of the protective paint (cataphoresis)

The cataphoretic treatment is carried out by immersing the bodyshell in a bath of electro-conductive solution into which particles of paint in suspension have been introduced.

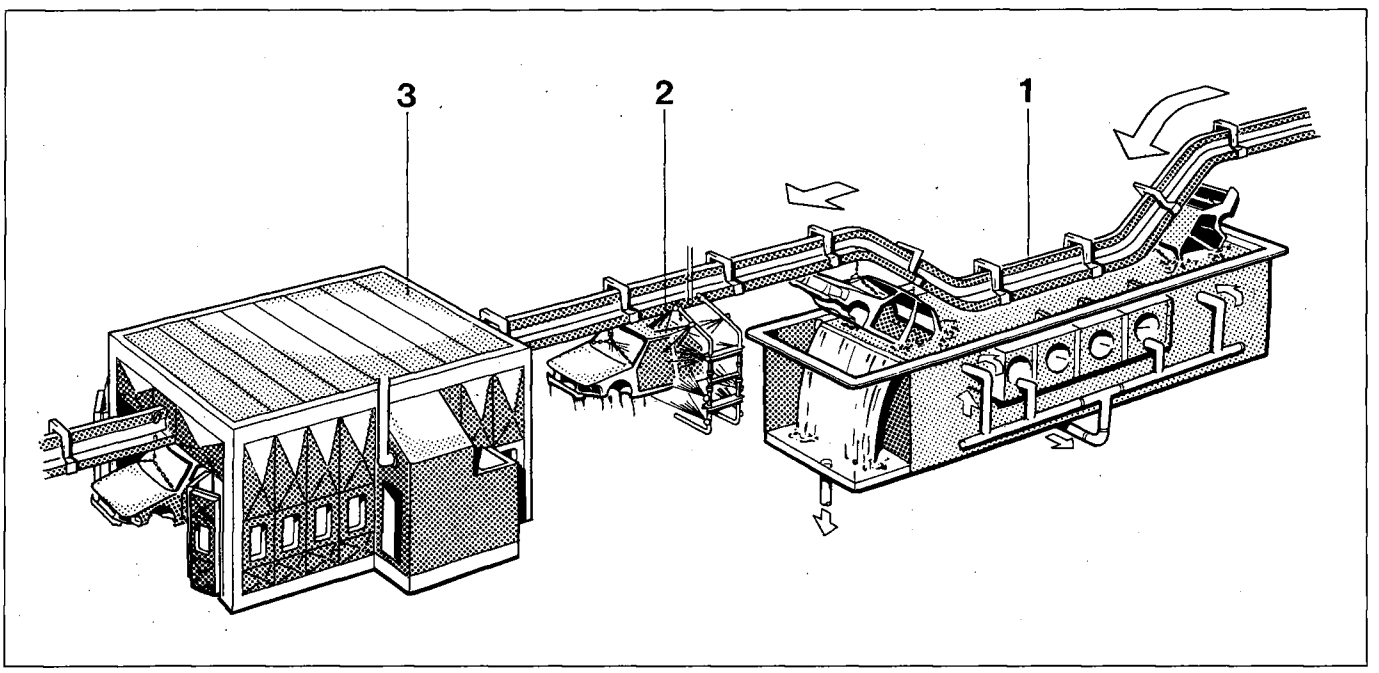

Application line of cataphoretic treatment in production

P4F13BM01

1. Cataphoretic application through immersion
2. Bodyshell washing
3. Paint baking

All the join lines are sealed to prevent penetration of the corrosive agents.
In a service situation it is advisable to use polyurethane sealants to renew the seal lines.
These products dry in depth even if they are applied very thickly and can be painted shortly afterwards (about 20 minutes later).

Copyright by Fiat Auto

70.

PAINTING

Painting the bodyshell is now known to have two basic objectives: protection of the body panel against environmental attacks and producing a shiny, rich colour in terms of aesthetics.

The type of colour and its characteristics are indicated on the identification plate which also contains the following information:
- paint product supplier;
- colour and type of enamel;
- code;
- type of product to be used for retouches and painting in service operations.

The range of pastel colours, excluding white, has two layers.

The table below indicates the range of pastel and metallic colours for the two models of the Marea:

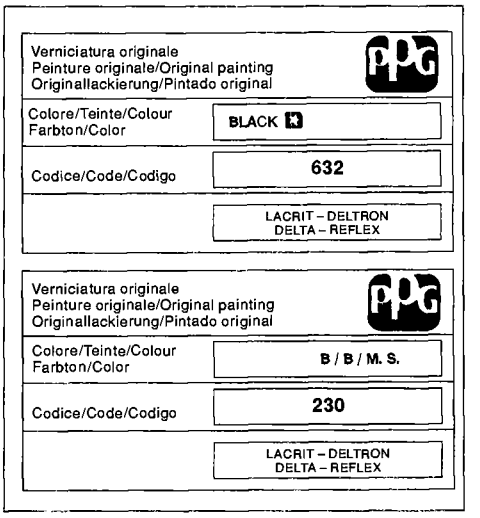

P4F14BM01

Pastel	Type	Code	Code PPG	Marea	Marea Weekend
White	Single layer	VR 249	577.022	●	●
Enamel Red	B/B	VR 169/A	259.121	●	●
Lord Blue	B/B	VR 438	259.800	●	
Bolsena Blue	B/B	VR 493/A	259.812		●

Metallic	Type	Code	Code PPG	Marea	Marea Weekend
Siena Red	M.S.	VR 106/A	237.172	●	
Pompei Red	M.S.	VR 107/A	237.179		●
Tivoli Green	M.S.	VR 333/A	237.392	●	●
Dark Green	M.S.	VR 336	237.325		●
Ice Blue	M.S.	VR 410/A	237.901		●
Leader Blue	M.S.	VR 488	237.860	●	●
River Grey	M.S.	VR 605/A	237.686	●	
Vinci Grey	M.S.	VR 606/A	237.685	●	●
Steel Grey	M.S.	VR 647	237.630	●	●
Luxor Beige	M.S.	VR 702	237.515	●	
Silk Black	M.S.	VR 803/A	237.521	●	●

SOUND-INSULATION

The EEC regulations imposed an external noise level of below 74 decibels for the Marea whilst, in effect, at an average speed of 100 kph in fifth gear the noise level inside the passenger compartment reaches 70 decibels.

The improvement of driving comfort, understood as quietness and quality of life inside the passenger compartment, has been achieved mainly by working on the following three areas of noise production:
- engine,
- rolling,
- aerodynamics.

All the engine types fitted on the Marea belong to a new generation with technological features also designed to improve the aspect of acoustics/vibrations.
This same concept is also valid for the components which transmit the drive, the suspension and the bodyshell anchorages.

The aerodynamics are also safeguarded by the favourable shape of the vehicle; the care taken over these components often have adverse effects on the acoustics:
- door handles,
- external rear view mirrors,
- bumpers,
- various profiles.

Diagram showing interior noise values

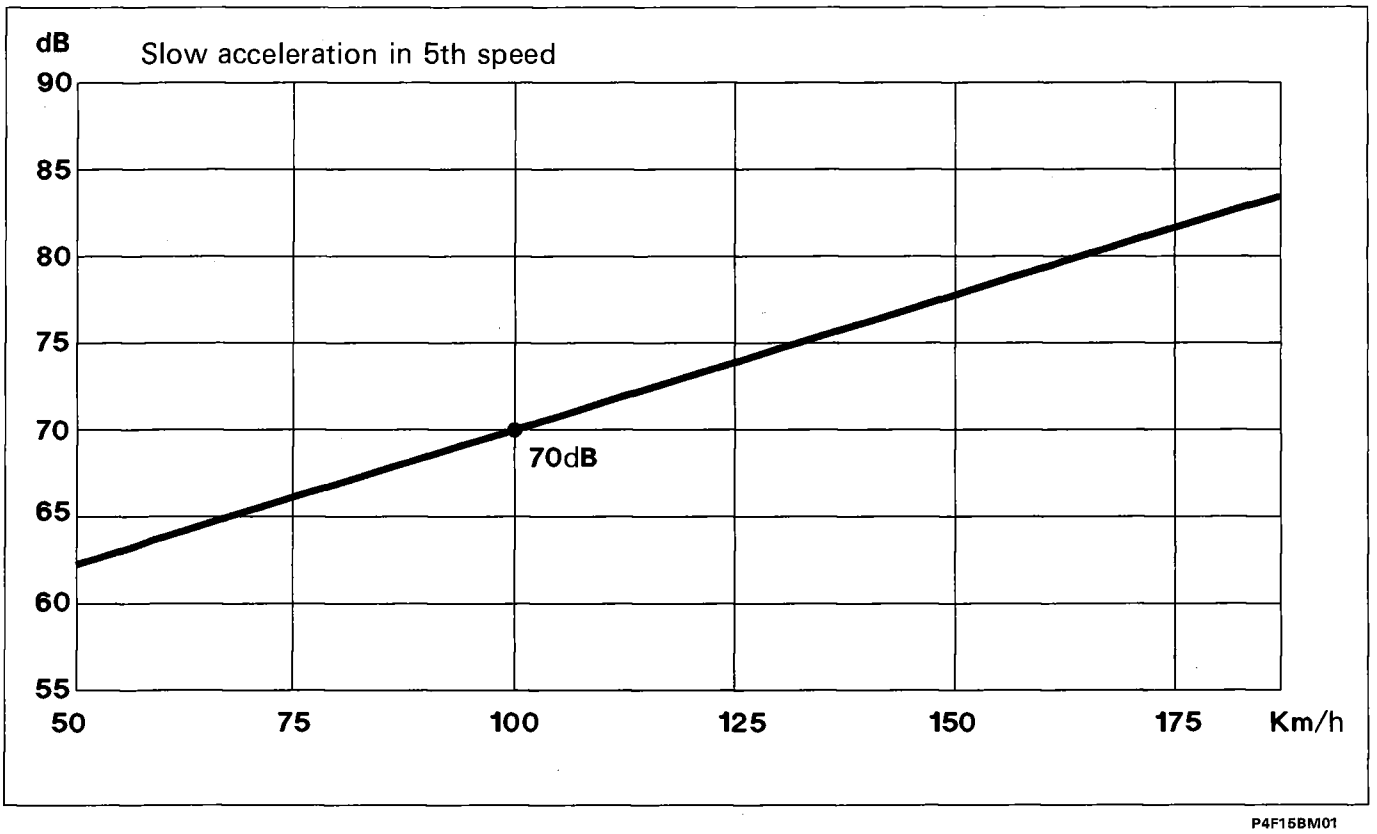

P4F15BM01

The most effective operations are:

- inserting blocks of pre-formed synthetic materials (URL) in the side member box sections to prevent the vibrations from being transmitted inside the passenger compartment;
- seals made from thermo-expandable material have been fitted in the struts, windscreen pillars and rearscreen pillars; during the cataphoretic process for the bodyshell, their reduced volume increases about tenfold to fill the box section perfectly;
- improving the bodyshell with careful research into all the components and fixings which creak, such as, for example the dashboard and seats; the rigidity of these components has been increased, the mounting points have been reinforced and great care has been taken over the selection of contact materials;
- sound-proofing of the panels with thermo-meltable materials applied before painting;
- sound-insulation of the dashboard front panel, the front and rear running boards, the wheel arches in the boot and the luggage compartment side panels with pre-formed, composite panels;
- extremely thick sound-deadening lining for the roof panele stuck to give better sound insulation;
- the use of apertures for passing the cables between the engine compartment and the passenger compartment with twin rubber seals »= 5 mm thick, both on the panel and the sound-proofing material, to reduce the transmission of the noise from the engine compartment to the passenger compartment;
- thorough check of the seals.

Diagram showing application of thermo-expandable products

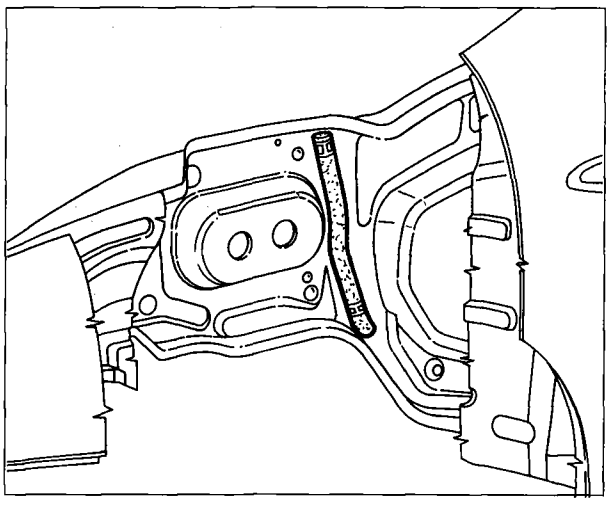

P4F16BM01

View of thermo-expandable product before treatment (< 60°).

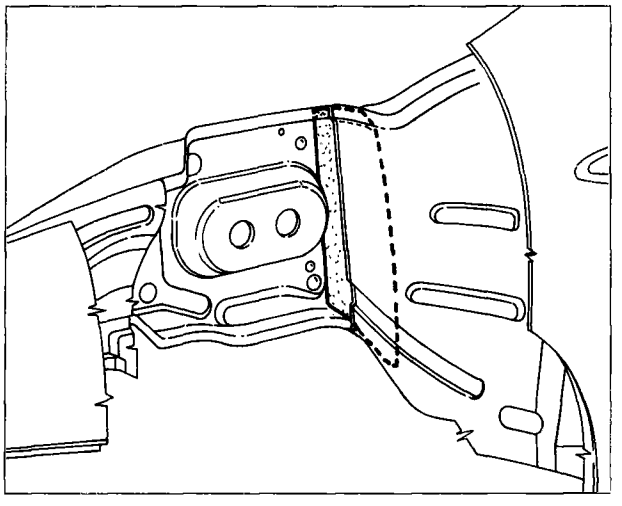

P4F16BM02

View of thermo-expandable product after treatment (> 60°).

Diagram showing application of products

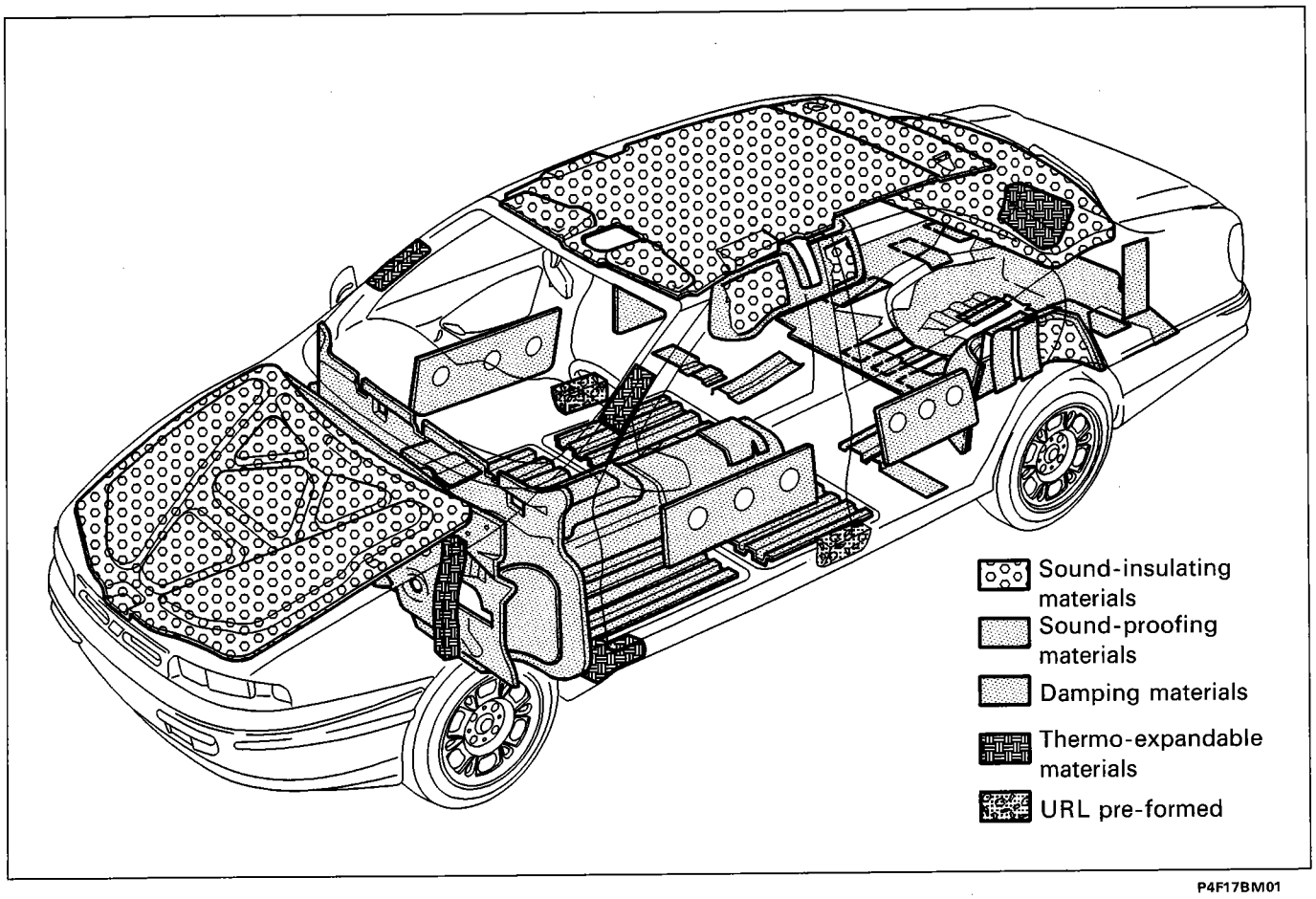

P4F17BM01

NOTE *Taking into consideration the excellent level of acoustic comfort achieved, in the case of repair operations it is necessary to guarantee that the same levels are achieved as during construction.*

Copyright by Fiat Auto

IMPACT DIAGNOSIS

This chapter is designed to highlight the most practical and appropriate way to work in order to allow body fitters to achieve the best possible results.
Before starting to repair a vehicle, even if it is only slightly damaged, a series of checks should be carried out.

Check with a template

These checks make it possible, amongst other things, to check that the infrastructure elements are not very distorted in relation ot the original geometry, whichwould involve the removal of the mechanical components and the repair of the vehicle at the repair bench.
The comparative measurements can be subject to appreciabledifferences (± 3 mm approx) which the experience of the repairer will allow him to establish whether they are due to possible impacts or whether they are due to manufacturing tolerances.
Start the check in a part of the vehicle not affected by the impact. For example, in the case of a vehicle which has suffered a collision at the front, in order to check whether the structure has been distorted, check points C-E = B-F; if there are not considerable differences in the length, move on to checking points B-D = A-E. It is possible in this way to establish a more exact diagnosis before the repair.

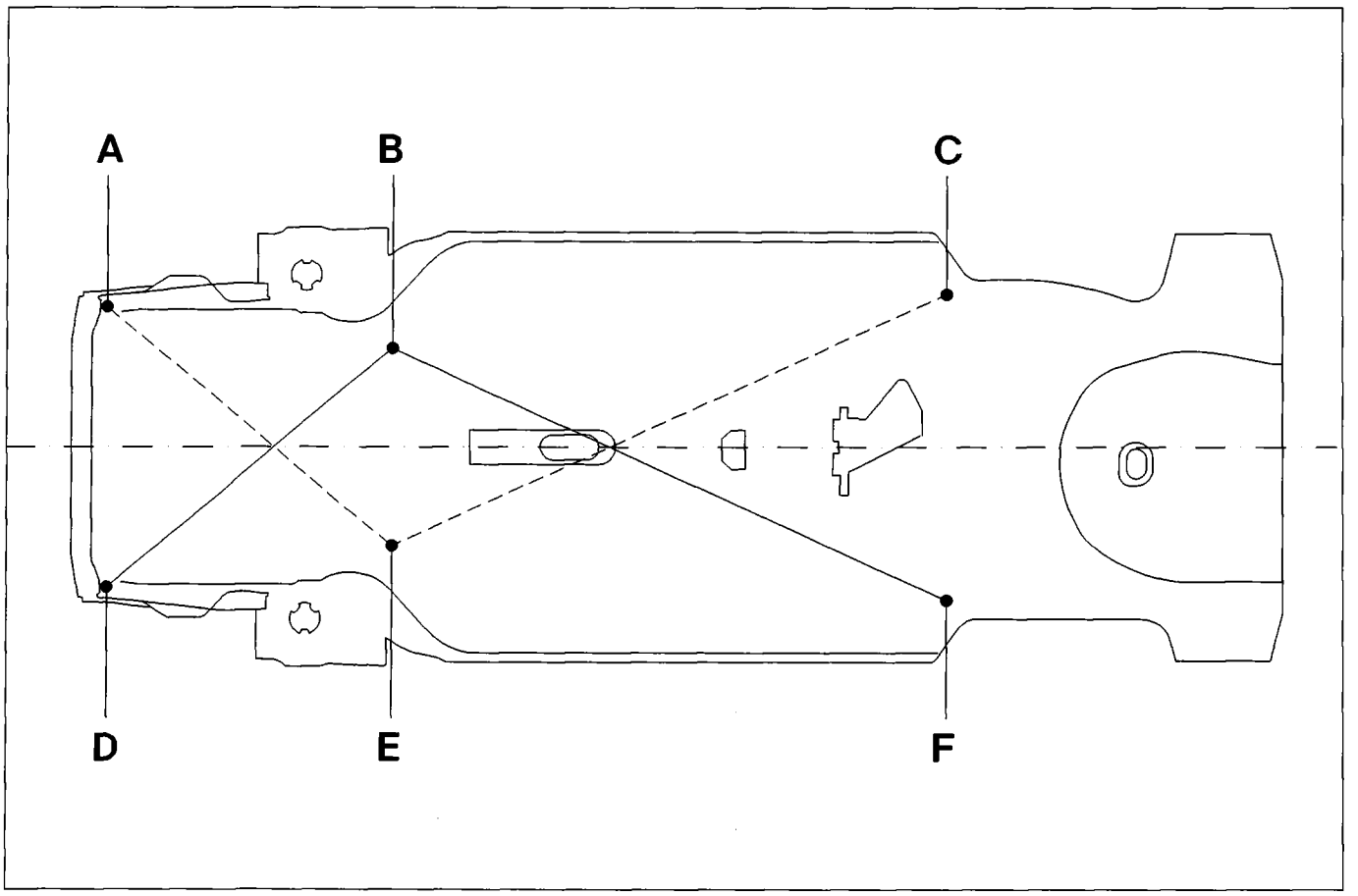

P4F18BM01

Checking points

Do not neglect checking the mechanical components which could have suffered damage.

DIAGRAM FOR CHECKING UNDERBODY

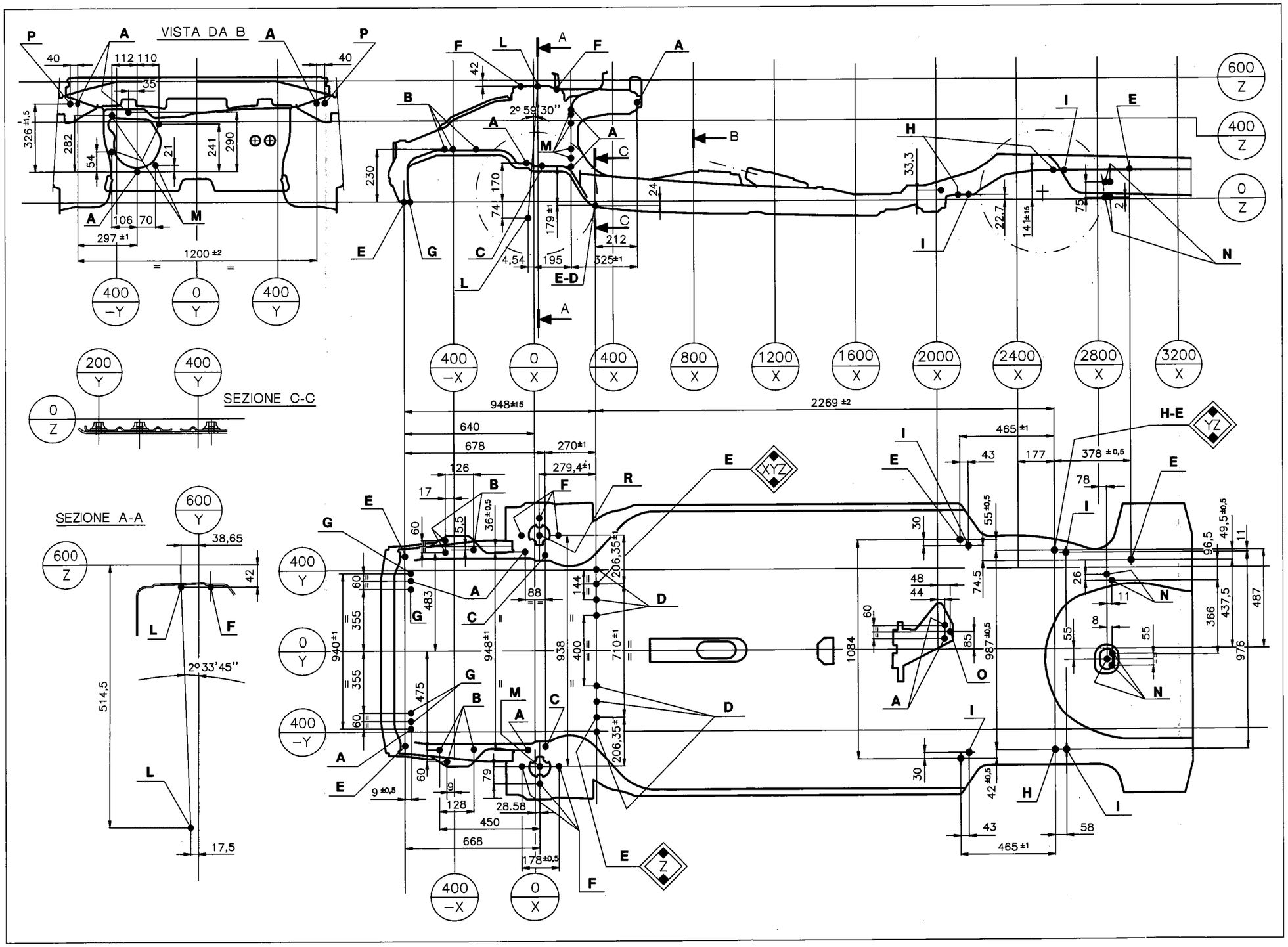

A. Automatic choke reference aperture
B. Engine fixings
C. Suspension cross member front fixing
D. Suspension cross member rear fixing
E. Main aperture
F. Shock absorber attachment mounting fixing
G. Lower radiator fixing
H. Suspension centering openings in pallet
I. Rear suspension fixing
L. Front suspension fixing
M. Brake servo fixing
N. Tank fixing
O. Silencer fixing
P. Dashboard cross member and steering column fixing

Copyright by Fiat Auto

TYPICAL MEASUREMENTS

Measuring windscreen housing and engine compartment dimensions

The dimensions of the housings, given below, are taken from the technical design drawings and tolerances of around ± 2 mm must be allowed for.

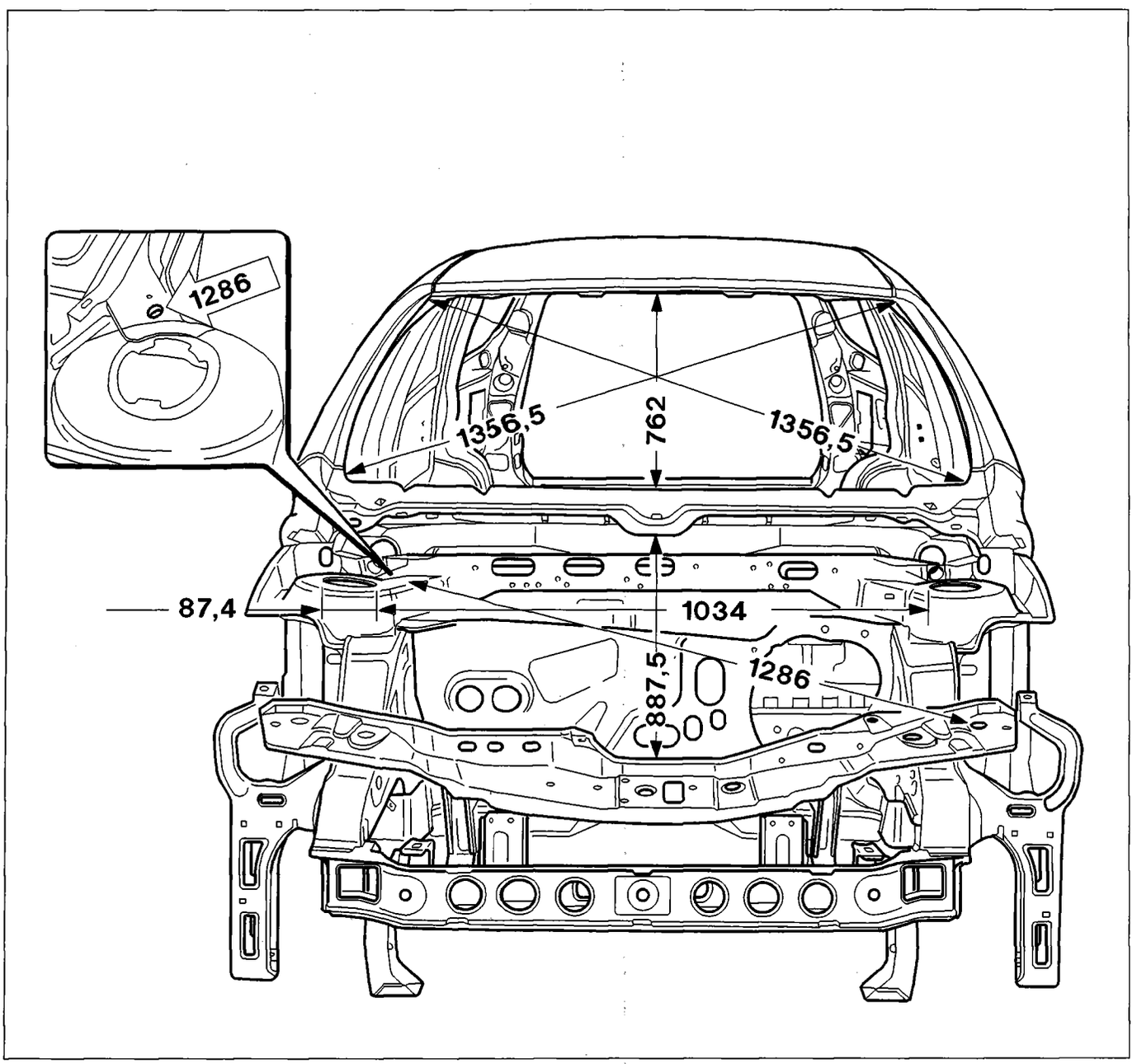

P4F20BM01

Measurements for checking windscreen housing, engine compartment and distance of front shock absorber mounting turrets

Measuring rear tailgate housing dimensions (Marea)

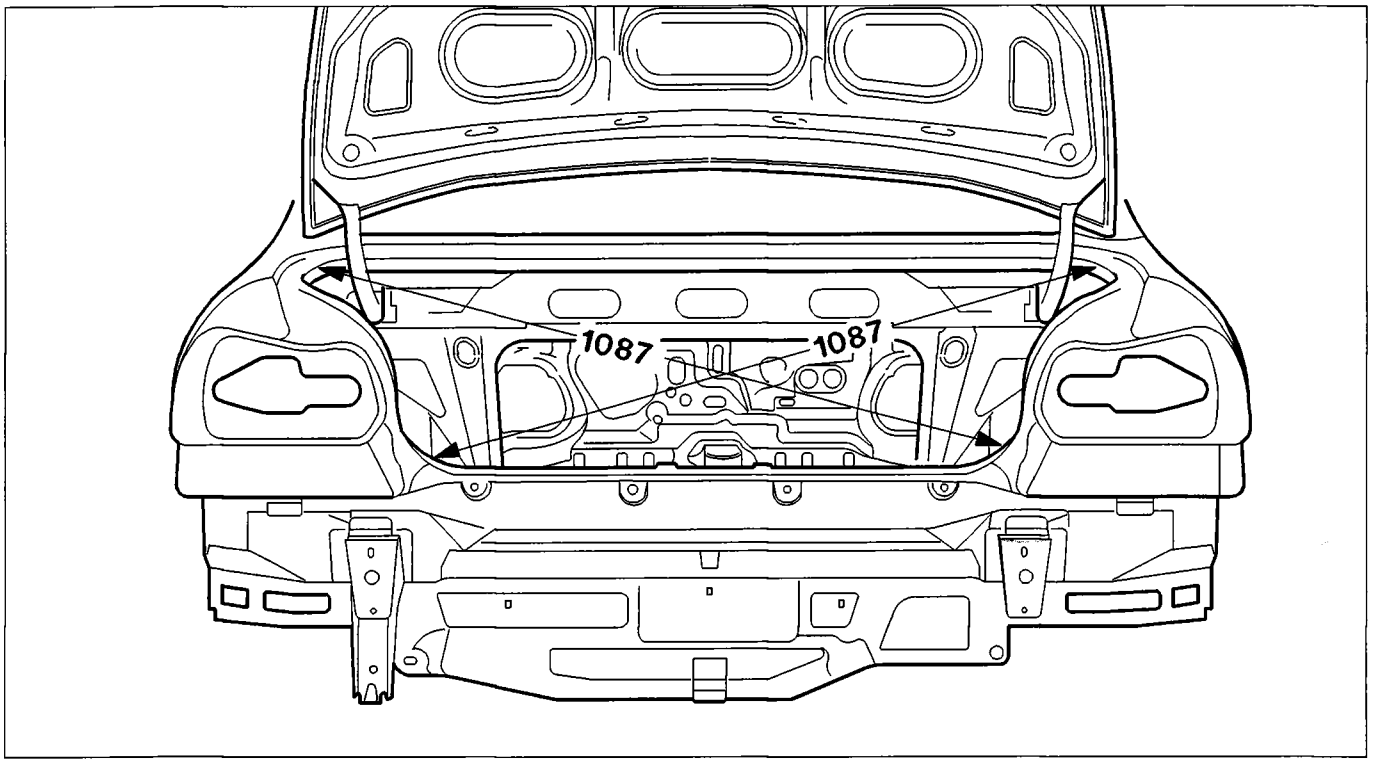

P4F21BM01

Measuring rear tailgate housing dimensions (Marea Weekend)

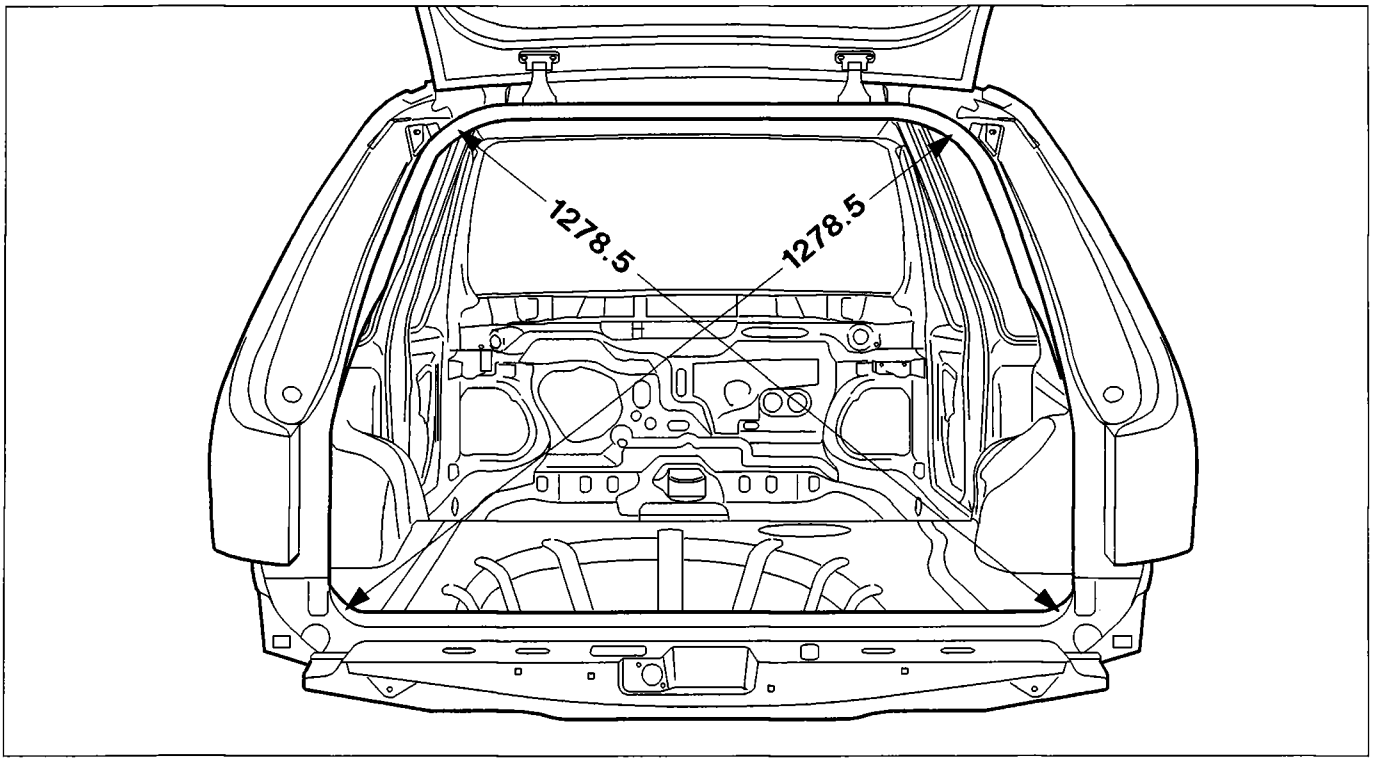

P4F21BM02

Copyright by Fiat Auto

Measuring centre and rear pillar housing dimensions (Marea)

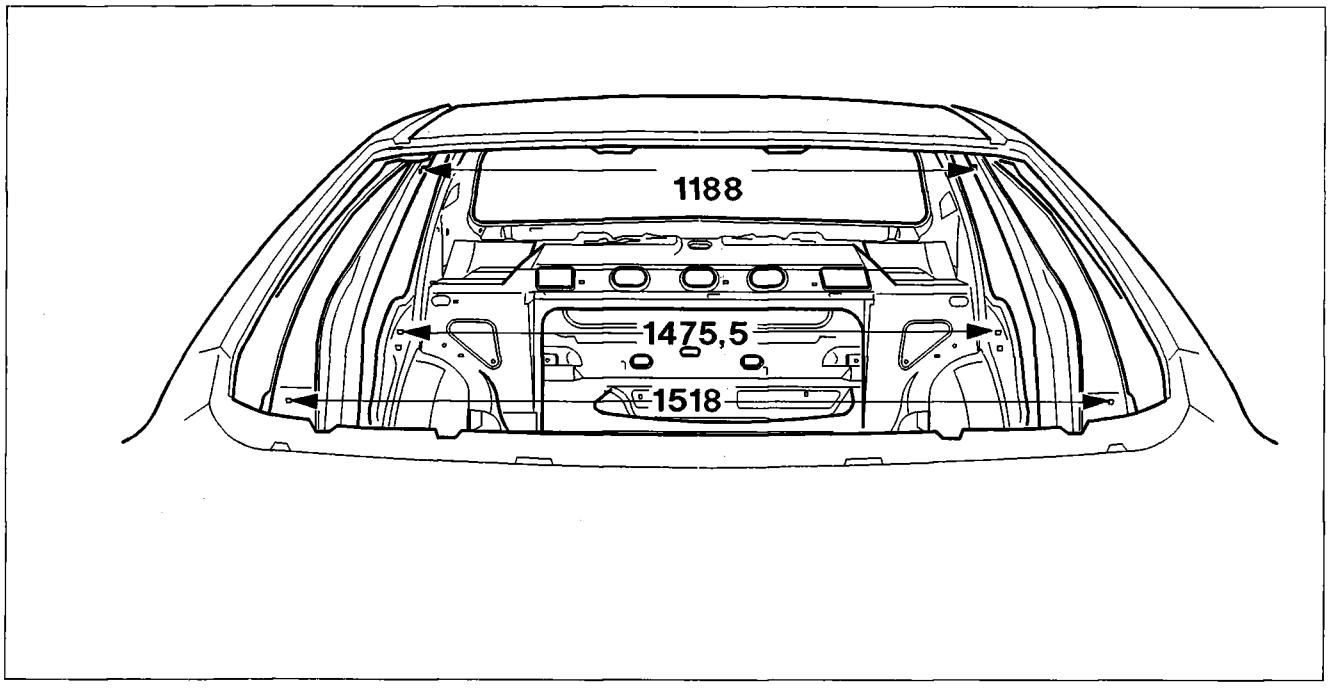

P4F22BM01

*1518 : Centre pillar
*1475,5: Rear pillar

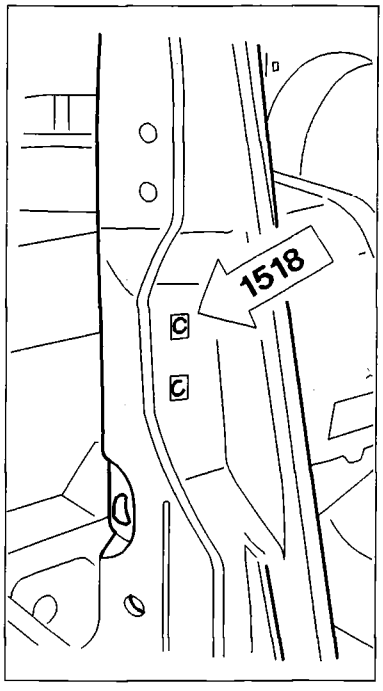

P4F22BM02

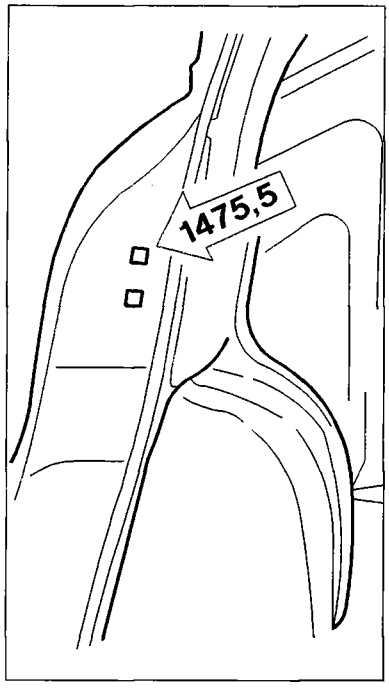

P4F22BM03

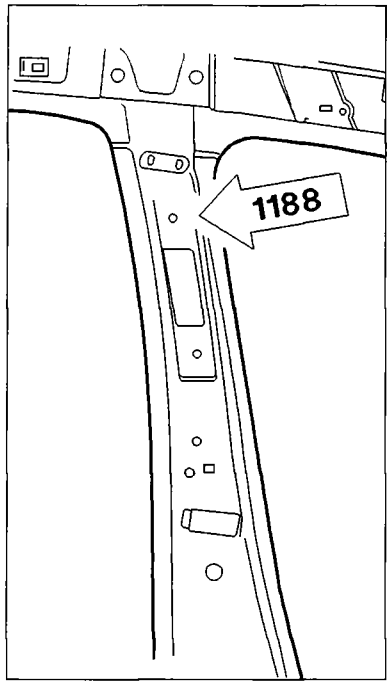

P4F22BM04

Measurements for checking distance between centre pillars for doors measured by the seat belt mounting nuts and between the lock strikers (Marea)

Measuring door housing dimensions

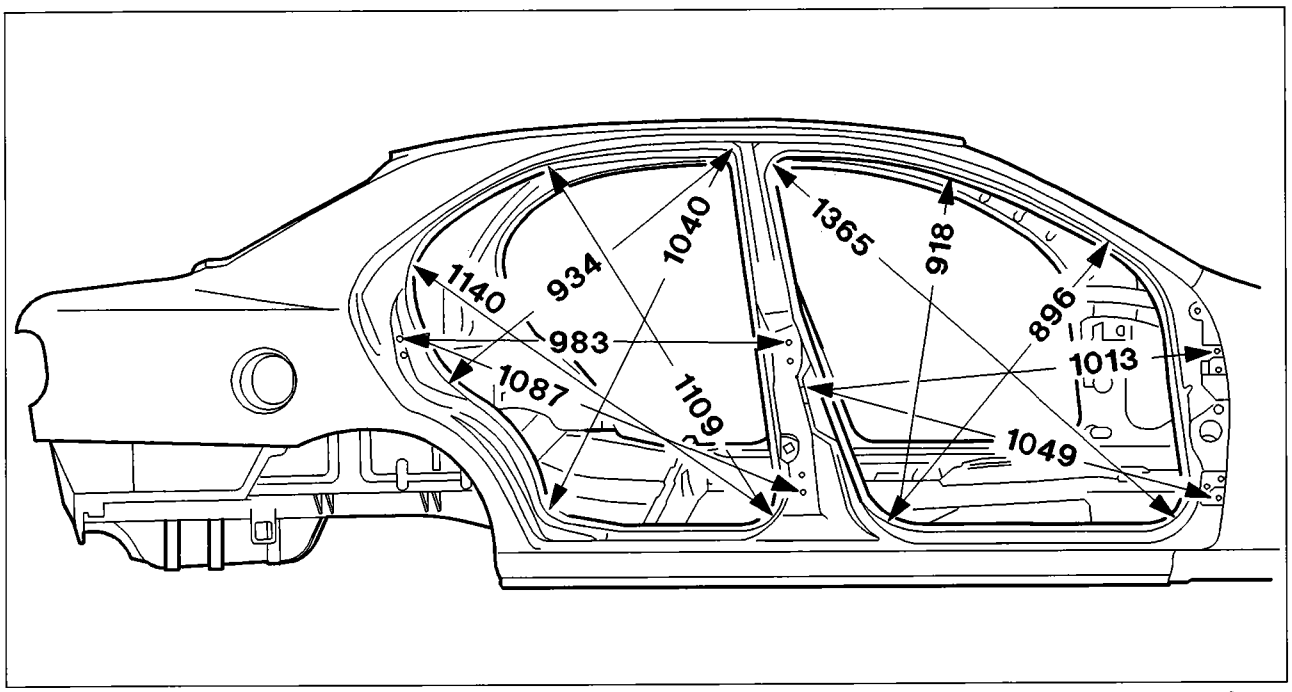

P4F23BM01

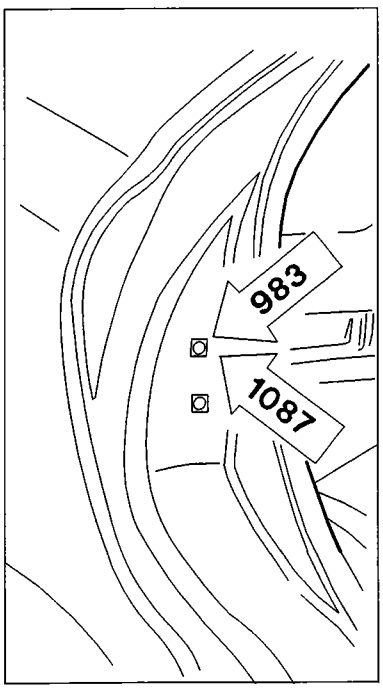

P4F23BM02

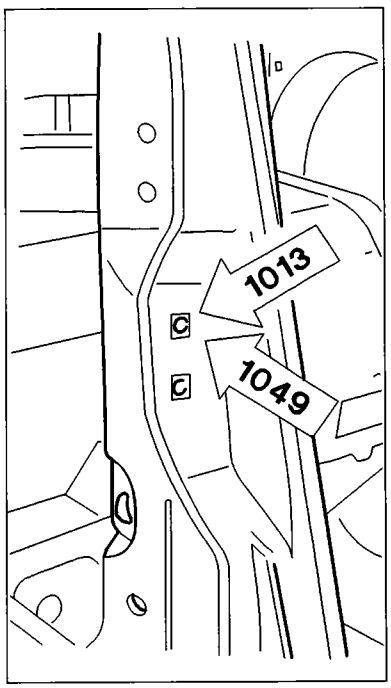

P4F23BM03

Measurements for checking door housings (Marea)

Measuring centre pillar housing and door housing dimensions (Marea Weekend)

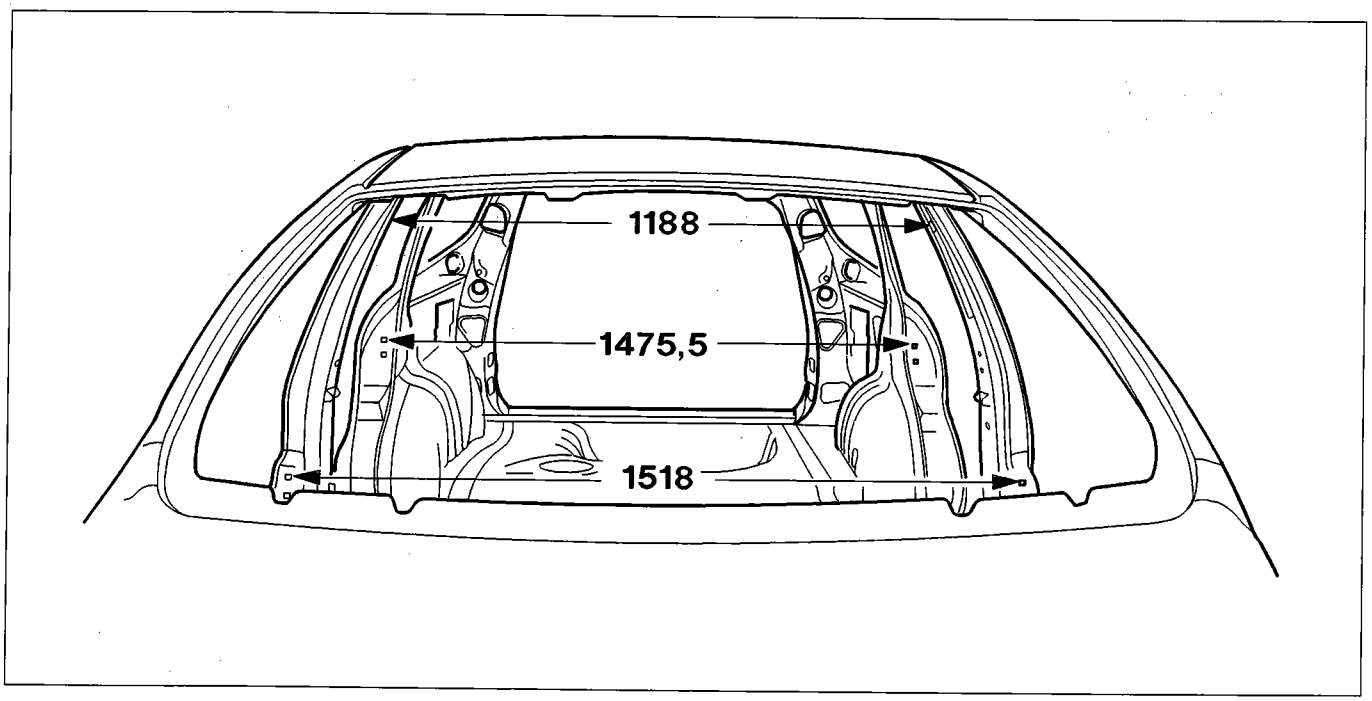

P4F24BM01

Measurements for checking distance between centre pillars for doors measured by the seat belt mounting nuts and between the lock strikers (Marea Weekend)

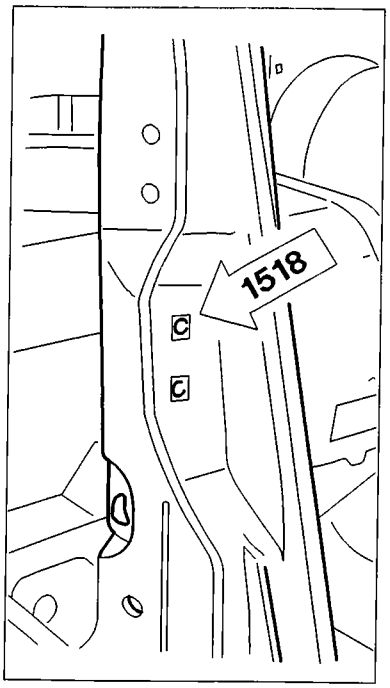

P4F22BM02

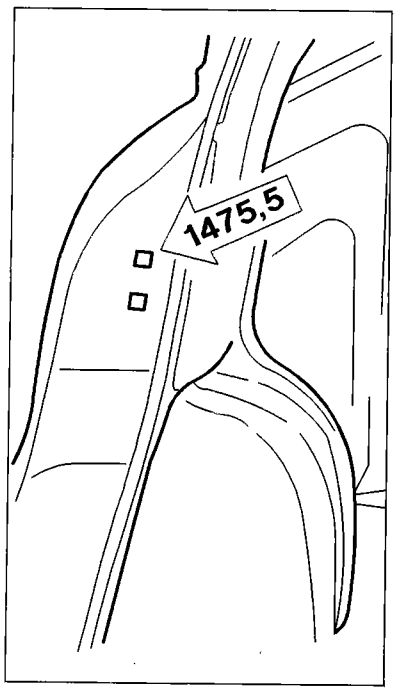

P4F22BM03

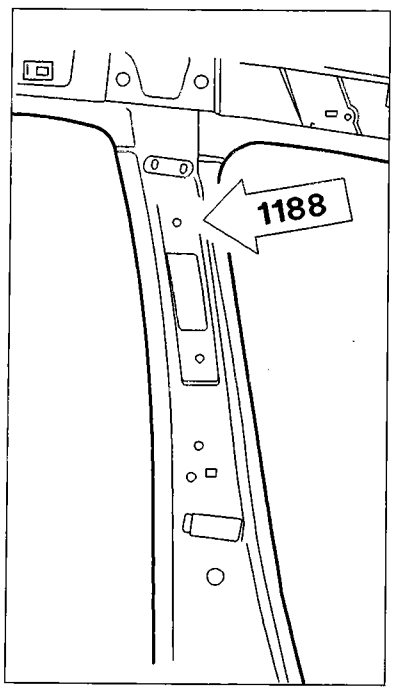

P4F22BM04

Measuring door housing dimensions

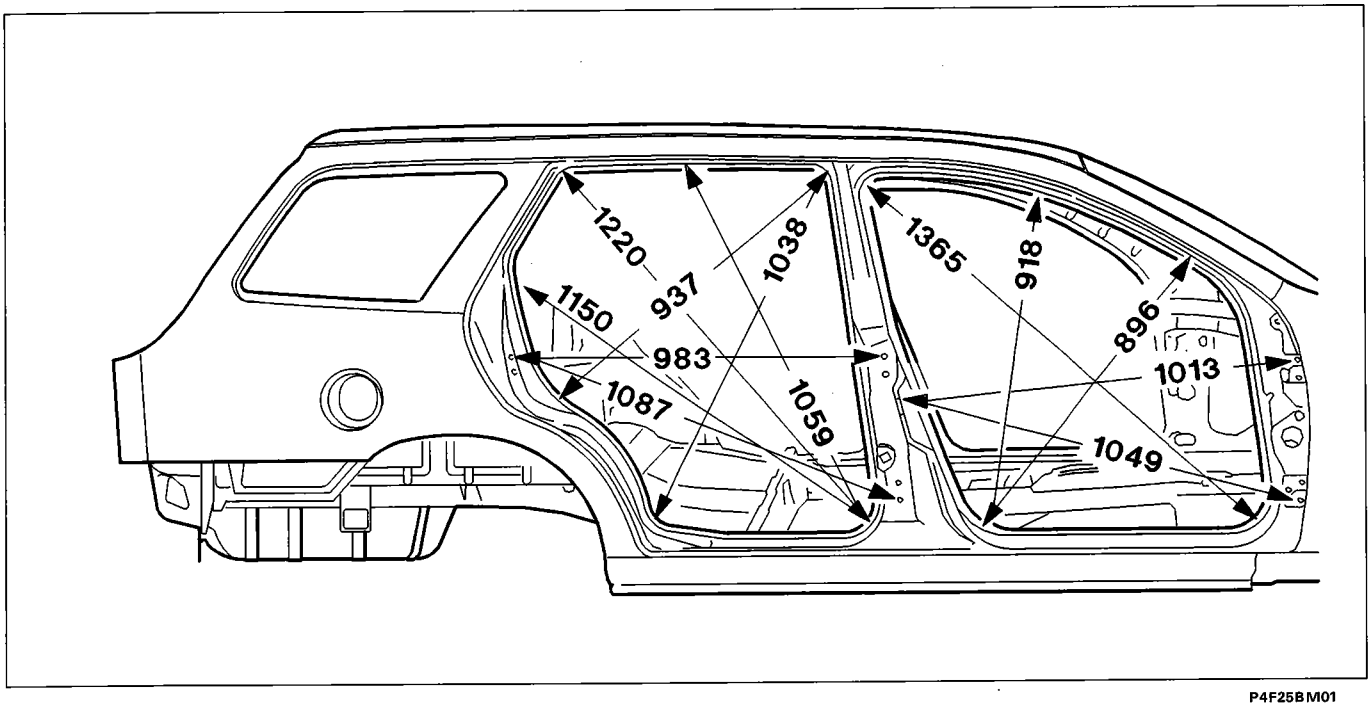

P4F25BM01

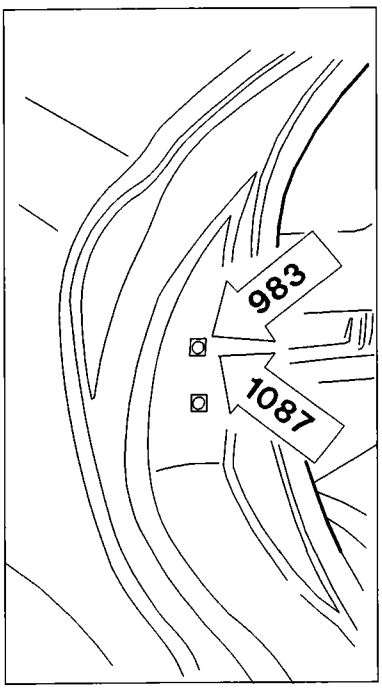

P4F23BM02

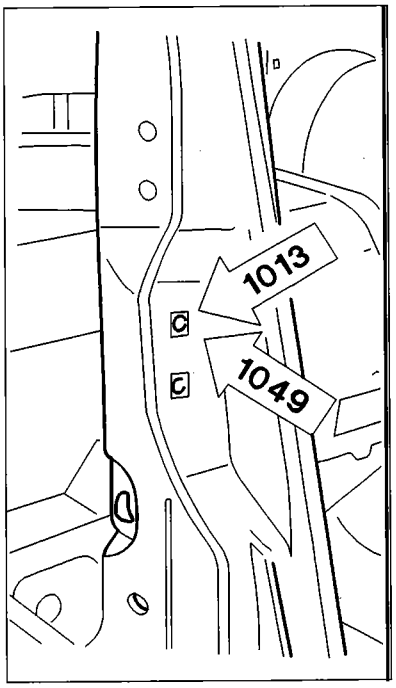

P4F23BM03

Measurements for checking door housings (Marea Weekend)

Copyright by Fiat Auto

Figures for adjusting moveable parts (Marea)

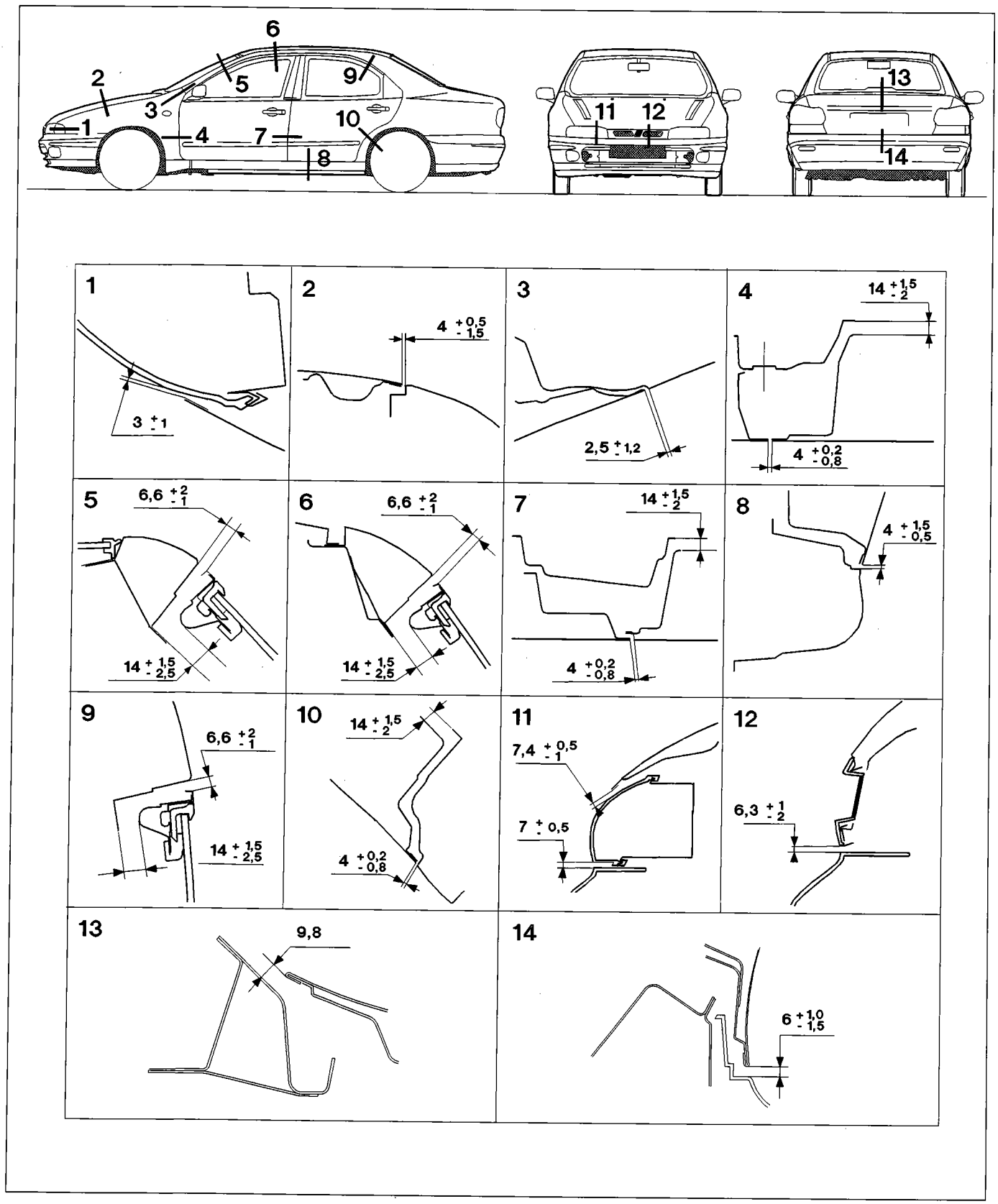

P4F26BM01

Figures for adjusting moveable parts (Marea Weekend)

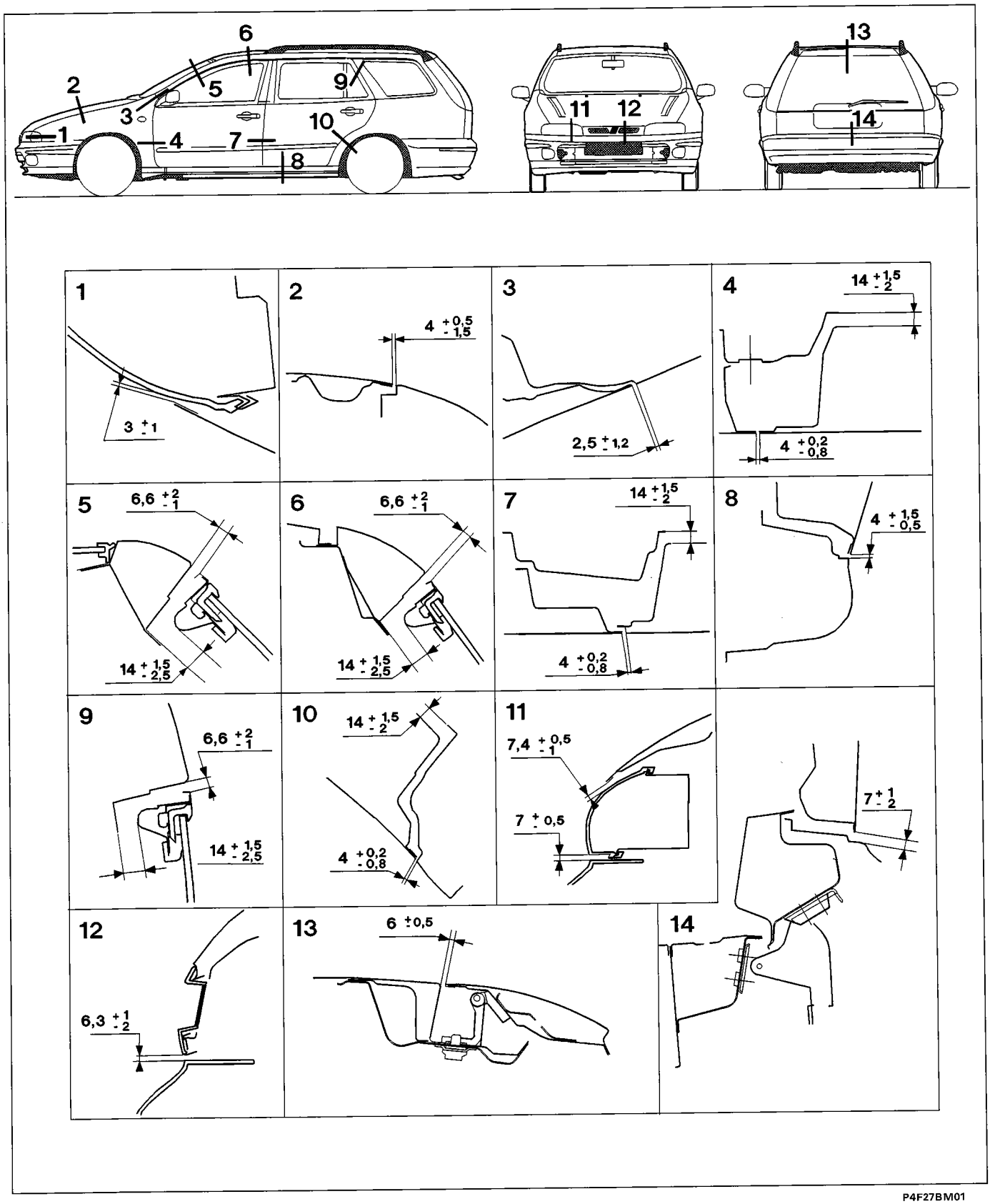

P4F27BM01

GRAPHIC INDEX OF EXTERNAL BODY PANELS

Replacement operation

Front wing	Rear wing	Rear wing and wheel arch
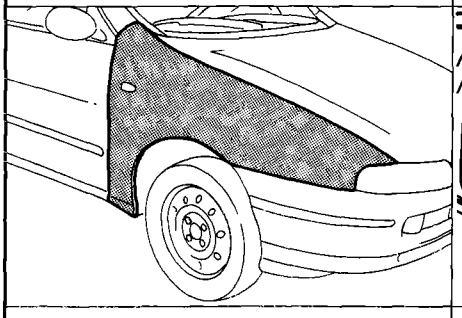	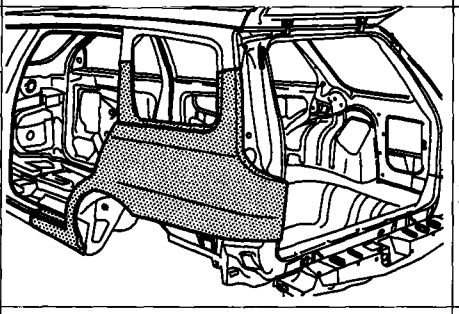	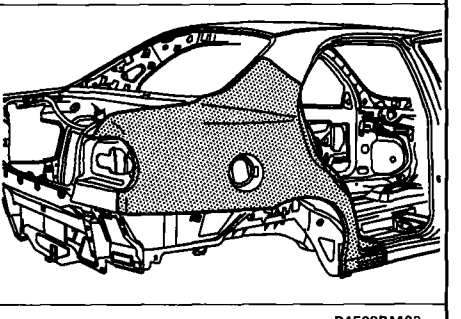
P4F28BM01	P4F28BM02	P4F28BM03
page 38	Marea Weekend: page 40	Marea: page 49
Side member and underdoor reinforcement	**Roof**	**Rear light cluster housing**
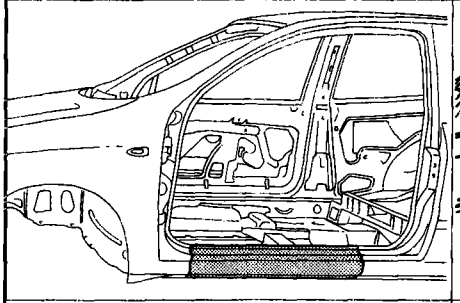	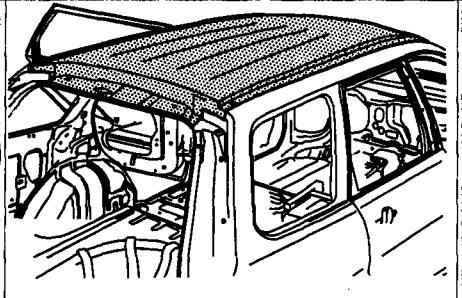	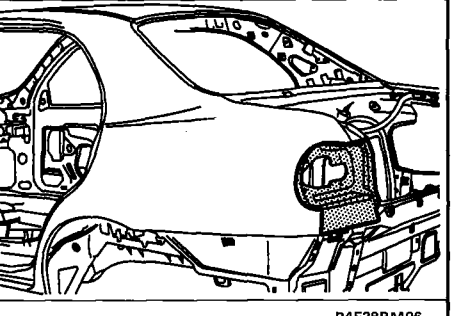
P4F28BM04	P4F28BM05	P4F28BM06
page 56	page 63	Marea: page 67
Rear light cluster housing	**Rear cross member lining**	**Rear cross member lining**
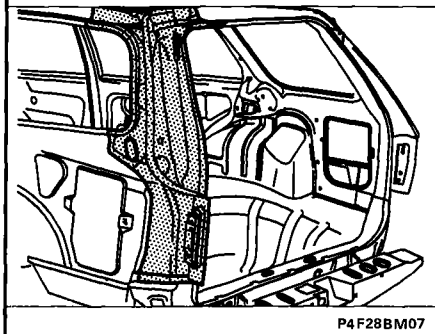	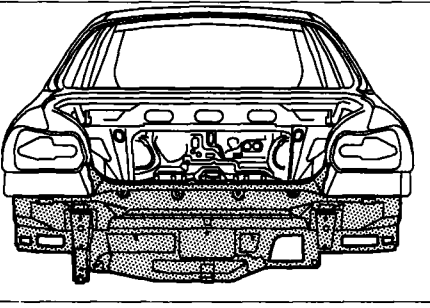	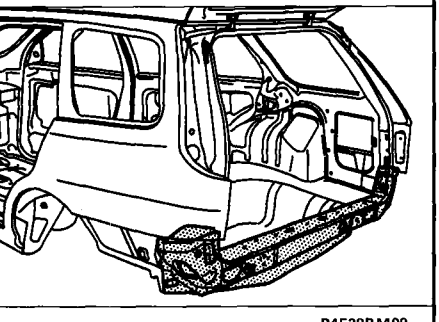
P4F28BM07	P4F28BM08	P4F28BM09
Marea Weekend: page 71	Marea: page 75	Marea Weekend: page 79

Partial rear cross member cover		
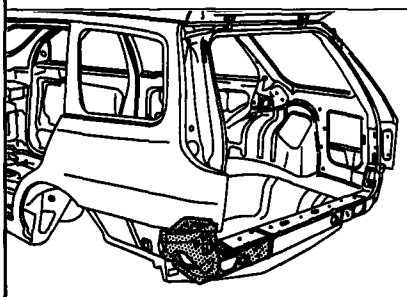		
P4F29BM07 Marea Weekend: page 82/I		

GRAPHIC INDEX OF STRUCTUAL PANELS

Replacement operation		
Rear floor and side members	**Front cross member**	**Complete front panel**
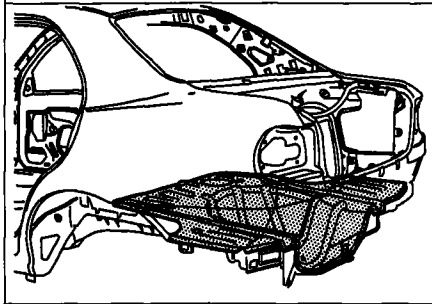	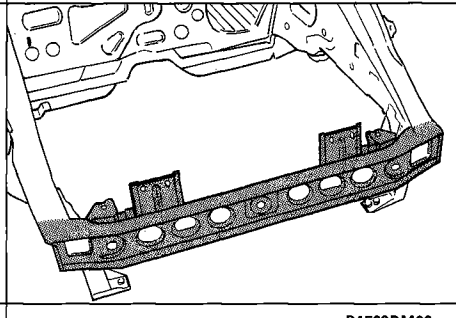	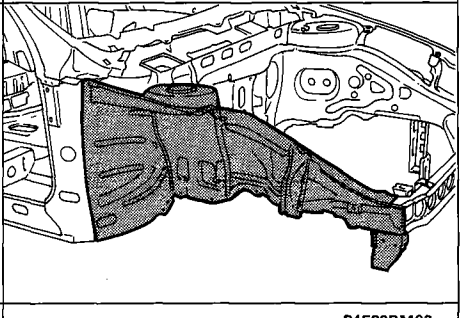
P4F29BM01 page 83	P4F29BM02 page 91	P4F29BM03 page 95
Partial front panel	**Front pillar**	**Centre pillar**
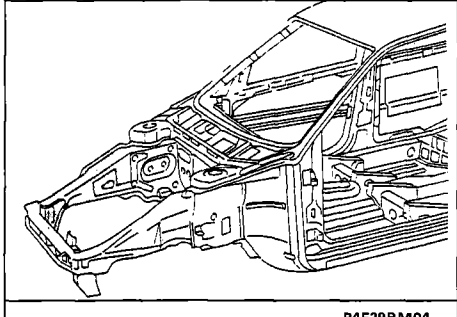	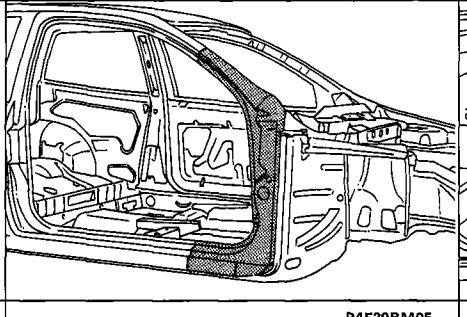	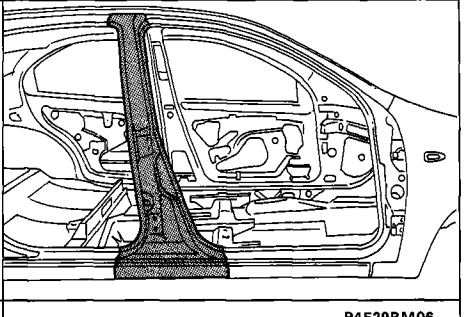
P4F29BM04 page 101	P4F29BM05 page 106	P4F29BM06 page 110

WARNINGS FOR OPERATORS

General instructions

Given the high level of design of vehicles, it is vital, in order to achieve a good repair, not to leave anything to chance and to refit the components and parts exactly as they were originally (for example: thermal shields, wiring, pipes, in particular in the area of the exhaust).

In order to ensure a good repair:
- protect the delicate parts of the vehicle (seats, steering wheel, wings, etc.);
- use professional products and tools;
- adhere to the tightening torques;
- carry out a final check before handing the vehicle over to the Customer (adjust the clock, check the operation of the anti-theft system, check the lighting and signalling devices, etc.).

Safety

The handling of certain devices (for example: spring/shock absorber assembly, automatic transmission, etc.) and certain components (braking system, A.B.S., air-bag, etc.) requires special attention as regards safety, cleanliness and, above all, care.

The symbol ⚠ (warning) used in this manual warns that it is necessary to take special care whilst carrying out a procedure and that failure to observe this care can result in danger for the safety of the operator or the safety of the vehicle.

ACCIDENT PREVENTION MEASURES

Protective clothing

Make sure that, depending on the operations to be carried out, protective goggles, ear--muffs, dust masks are worn. As a rule, protective overalls, gloves, shoes and headgear should be worn.

Safety supports

After having raised the vehicle, positionon suitable safety supports, such as chocks or stands.
To identify the support points, refer to the paragraph "VEHICLE SUPPORT POINTS".

Inflammable materials

⚠ *Make sure that the earth lead for the battery has been removed before starting any repair procedure (this is to prevent short circuits or accidental starting).*

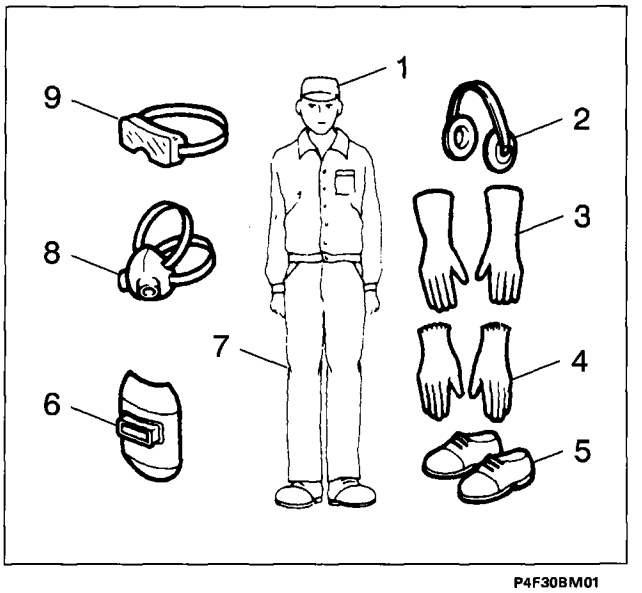

P4F30BM01

1. Protective headgear
2. Ear-muffs
3. Welding gloves
4. Gloves
5. Protective shoes
6. Protective shield
7. Overalls
8. Dust mask
9. Protective goggles

If welding has to be carried out near the tank, the petrol vapour separator or the active charcoal filter, then theymust be removed from their housing.
Always seal the free connections of the fuel pipes, the petrol vapour pipes and the brake fluid pipes, each time the connectors are removed.
Do not smoke whilst carrying out repair procedures on the vehicle.
Do not use inflammable products to clean components.

Working environment

The working environment should be well ventilated and well lit to ensure the safety of the operators.
Since paint and sealant products can give off toxic gases if heated, when cutting and removing damaged panels it is preferable to use a power saw or chisel instead of an oxyhydrogen flame.
Use suction to contain the dust created.
Use exhaust fans for harmful gases (fumes produced by welding, exhaust gases, etc.).
Make sure that the straightener is used correctly according to the procedures in the Manufacturer's Manual.

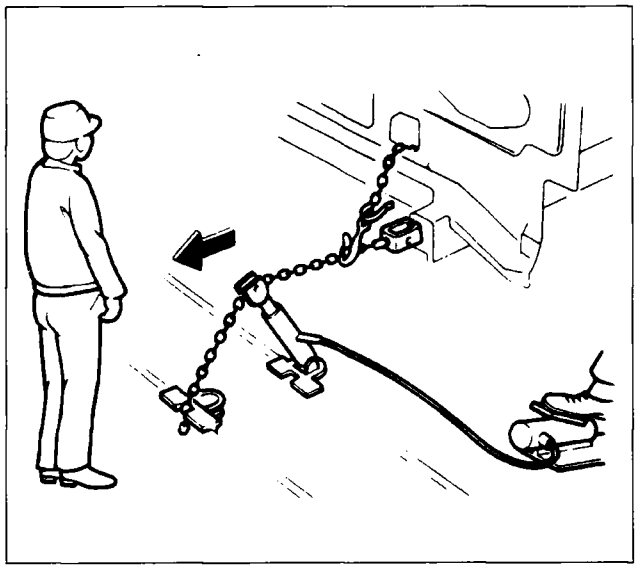

P4F31BM01

During the operation of straightening the damaged bodyshell, never pause in front of the straightener in the same direction as the traction force is being exerted.

Carrying out procedures

Make sure that the procedure to be carried out is not dangerous and, as a general rule, follow the recommended safety instructions for the actual operation.
Use the equipment recommended and make sure that it is in good condition.
Take up a comfortable position before exerting force or lifting a load and do not exert excessive force, rather enlist the help of another person.

Protecting the environment

Do not discharge the fluid contents of the vehicle (engine oil, brake fluid, etc.) into the sewage system; they should be disposed of in accordance with the regulations in force.
Do not discharge the fluid from the air conditioning system into the atmosphere.
Avoid burning used products (tyres, etc.).

WARNINGS FOR REPLACEMENTS

It is always advisable to use genuine spares. This ensures the perfect outcome of the repair and restores the original operating standards of the vehicle.

WARNINGS FOR WELDING

Before carrying out electrical welding on the vehicle, remove the electronic control units to avoid them from being damaged (excess voltage, high temperatures, etc.).

Copyright by Fiat Auto

GENERAL INSTRUCTIONS FOR REPAIRS

Introduction

For safety reasons and to improve the quality of repairs, it is forbidden to:

- replace a side member, semi bloc or bloc, without using a repair bench; the use of the bench makes it possible to guarantee the restructuring of the vehicle with the original manufacturing measurements, ensuring the correct position of the elements of both the forecarriage and the rear part of the vehicle;
- cut and weld any element of the bodywork and its internal reinforcement along the same line (see figure 1); carried out correctly, the operation involves a gap of several centimetres between the two cutting lines in order to distribute the meltable points created by the welding (see figure 2);
- heat side members for straightening.

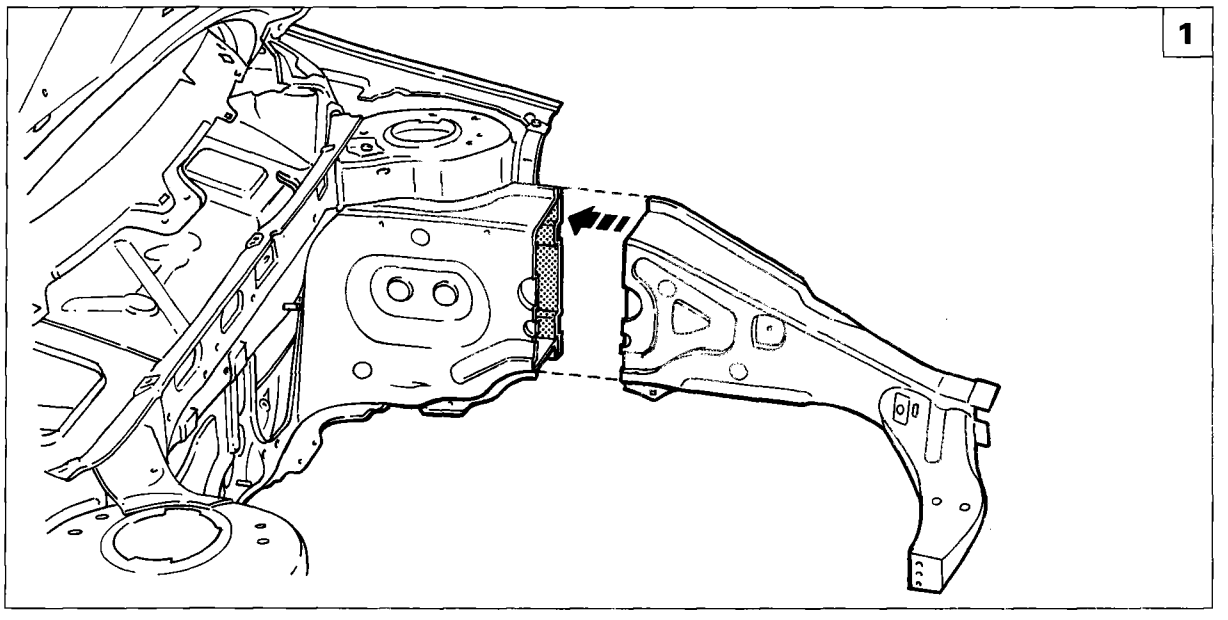

P4F32BM01

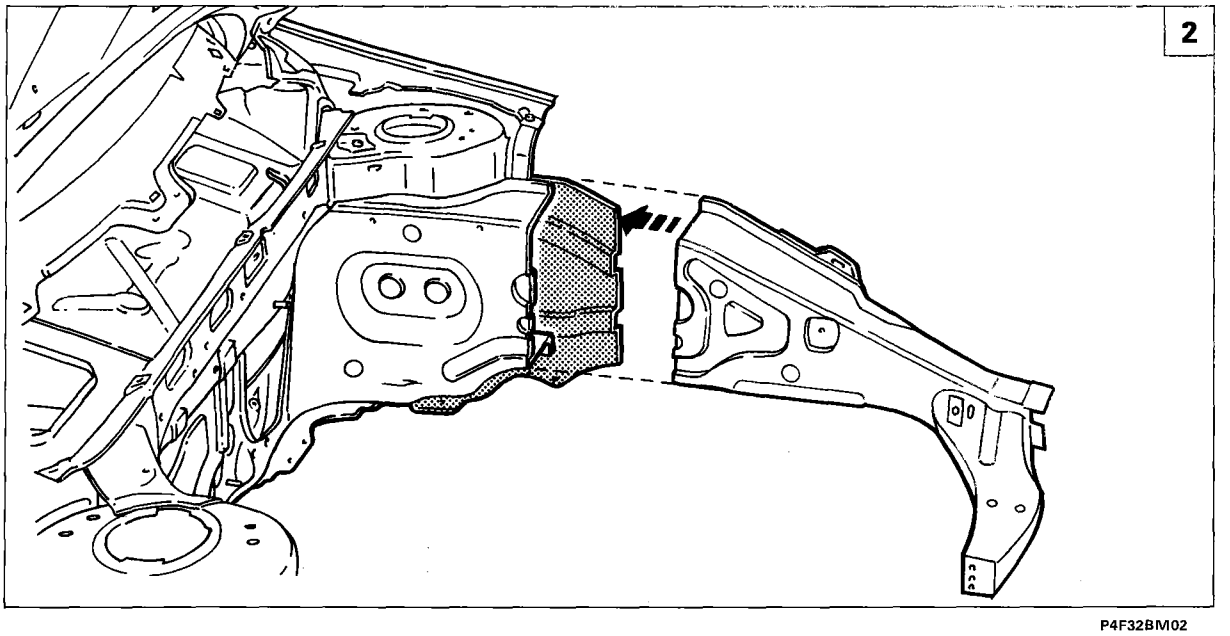

P4F32BM02

Preliminary procedures

Establish the extent of the damage, check that there is no distortion to the connected components, by checking the bodyshell alignment figures.

Carry out any straightening operations to the bodyshell using suitable methods (jigs, templates or gauges), before cutting the component.
After this operation check that the components not being replaced are in tact.

Precautions/comments and preliminary dismantling

Protect the seats and the parts which could be damaged using cloths.

Remove the fuel tank and disconnect the battery and all the electrical and electronic components because the currents produced during the welding operations could cause them serious damage.

Operating cycle of removing and refitting

The replacement of the panels can be "total or "partial"; this second solution is preferable when trying to avoid damage to another panel to which it is welded.
Remove the component concerned, preferably using a chamfering machine or, where this is not possible, a hack sawing machine.

In the diagram showing the cutting of the component concerned, the sections of the panel at the cutting points are illustrated to allow the operator to adjust the position and the depth of the cutting.

When replacing the components indicated in the graphic index, follow the special procedure detailed in the pages which follow.

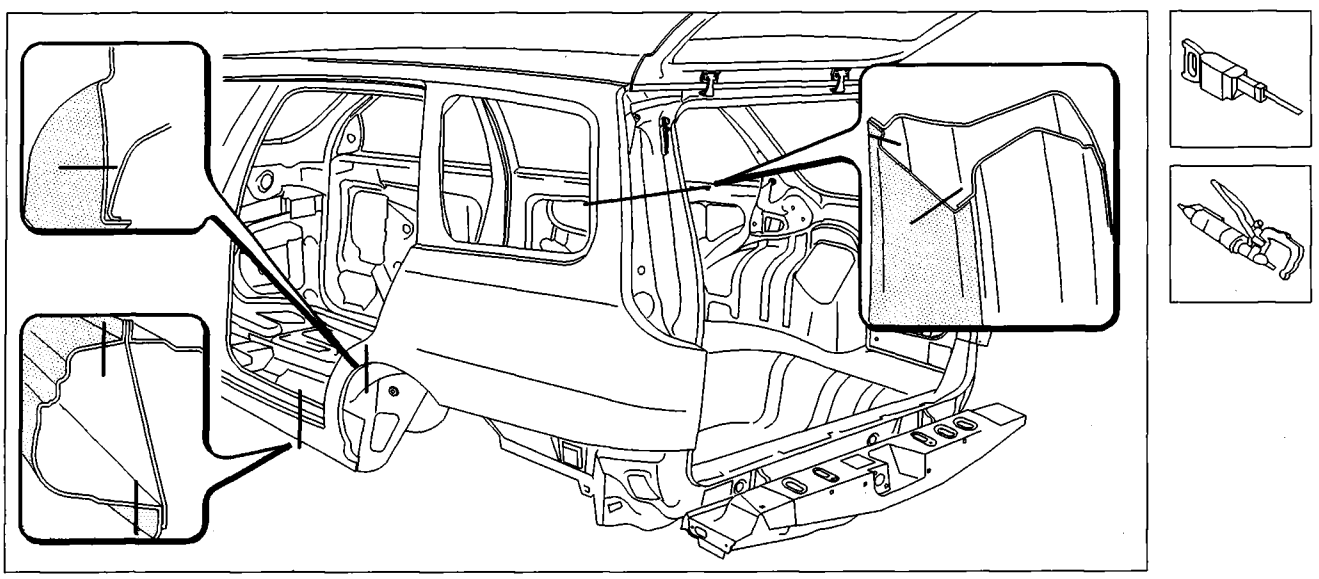

P4F33BM01

Accident prevention instructions

When carrying out the operations described, adhere strictly to the safety procedures.
Protective shoes, ear-muffs and gloves should be worn during the cutting operations, goggles or a visor and gloves during the welding operations and a mask and gloves during painting operations.

Preparing the edges of the bodyshell

1. Remove the spot welds along the entire perimeter of the edge of the bodyshell, using a special cutter.
2. Remove the metal off cuts using pliers.
3. Straighten the edges with a hammer and dolly block.
4. Remove the weld residues using a disc grinder.
5. Apply the IVI Epox epoxide type primer or an electro-weldable galvanized paint or an equivalent product, to the areas previously ground.

Protecting the parts repaired

To avoid any problems in the future it is important, after replacing or repairing an element of the bodywork, to restore the correct protection, both internal and external, so that the original properties are restored and to ensure the quality of the repair and guarantee it against corrosion.
The replacement components are subject to the same cycle as the bodyshell.
In order to preserve the original anti-corrosion properties, these elements should only be ground when strictly necessary.

Preparation and painting procedure

1. Preparing the areas welded or repaied with P100 abrasive paper.
   This operation is designed to simultaneously remove any layers of paint which no longer adhere perfectly to the panel and to level any imperfections in the thickness or "steps".
2. Dry sanding the part replaced and the surrounding paintwork with P320 abrasive paper.
   Simply make the replacement part opaque or smooth out any imperfections, drips, lumps or scratches, avoiding, as far as possible, removing the original treatment.
3. Blow through with an air jet and wash with diluent because the dust could seriously affect the adhesion of the products to be applied.
4. Phosphating: apply a phosphating anti-rust product to the stripped parts, using a brush when necessary; in addition to preventing corrosion, this product also improves the adhesion of the subsequent products.
5. Finish off with metal filler to remove any uneveness and/or depressions in the panels which have been welded or repaired.
   The application, with blades, of a suitable thickness of polyester filler, is carried o ut in one or more goes.
   Take care to ensure that the catalysis is not excessive which will show up later in the form of yellow stains due to the peroxide.
6. Dry sanding with P 80-100 paper.
   It is possible to remove the excess filler applied previously either manually with the aid of rubber or wooden buffers or with mechanical sanding machines. The sanding should be carried out skillfully, particularly in the areas close to the surrounding paintwork to avoid large scratches. Any uneveness, grooves, pourousness, etc. should be dealt with now using the same filler to avoid future operations.
   Finish off with a finer grade paper (P320).
   Blow through with compressed air and degrease very thoroughly.
7. Finishing primer (twin component).
   Protect the parts not involved with the application of the primer. The application of the finishing primer should be carried out scrupuloulsy following the manufacturers' recommendations. A very thin layer of black paint, atomized, applied to the primer, will highlight any imperfections, during sanding, which can then be eliminated.

8. Dry or wet sanding with P500-P600 abrasive paper.

9. Blowing with compressed air/degreasing.
   (Dust and dampness can seriously affect the adhesion of paint products).

10. Sealing. Protect the joins of the superimposed components, the lower part of the wheel arch and the underdoor area with a twin component sealant, applied either with a brush or by spraying.

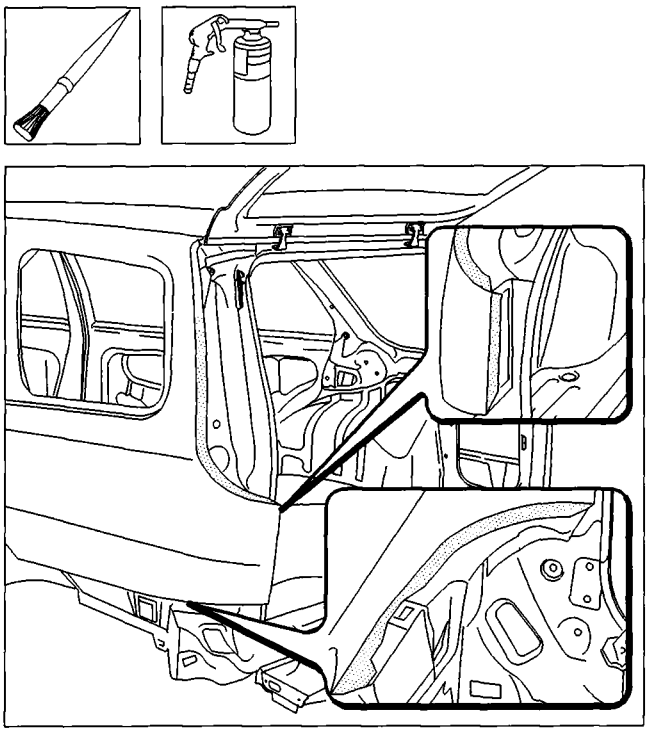

P4F35BM01

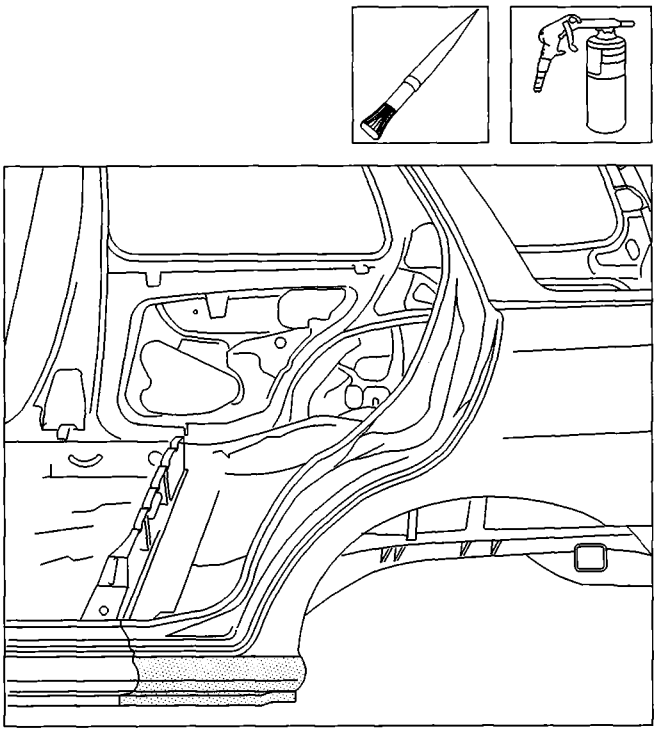

P4F35BM02

Using a spray gun, apply a layer of sealant to the contact edge between the wheel arch and the rear wing.

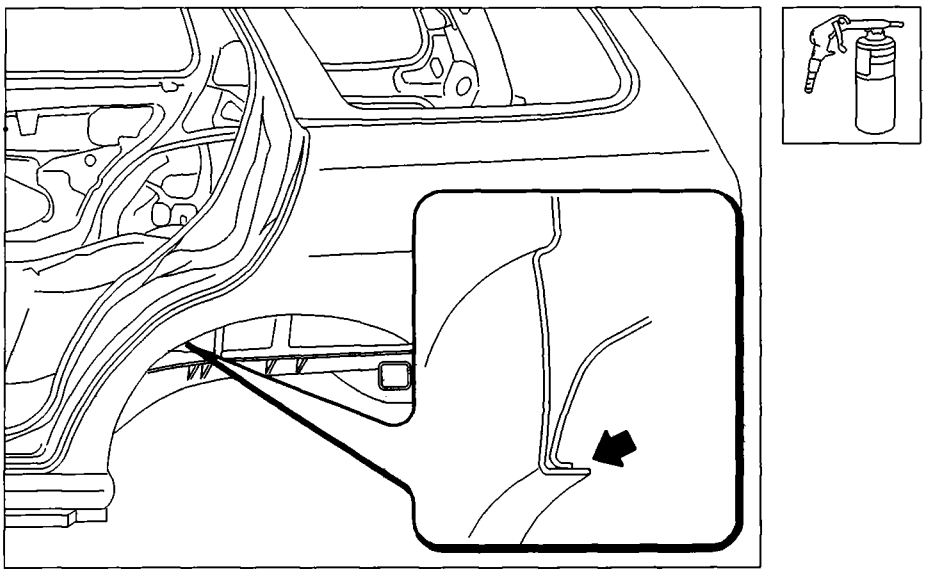

P4F35BM03

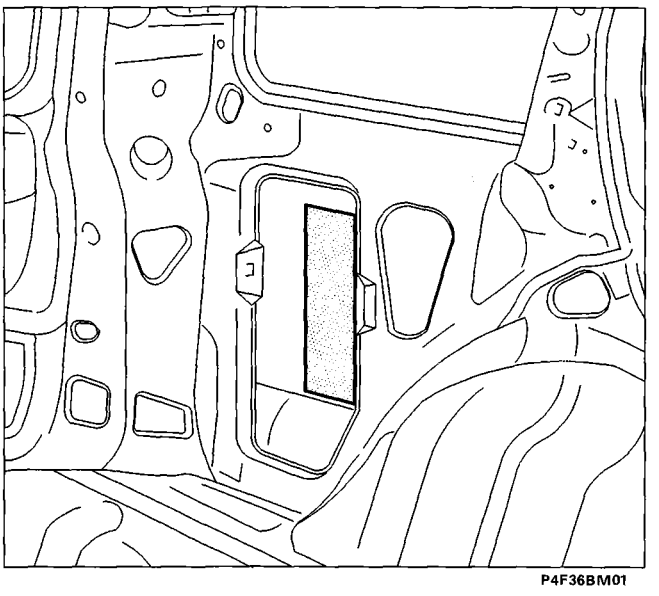
P4F36BM01

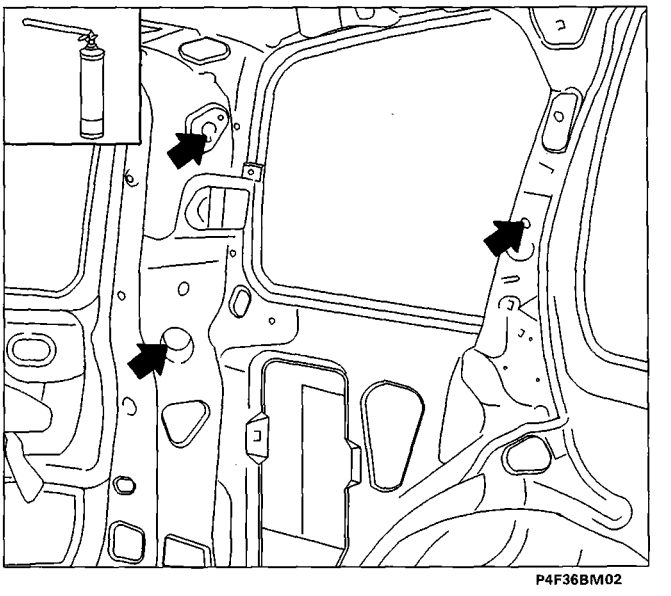
P4F36BM02

11. Damping panels. Fit the damping panels to the inside of the wing.

12. Foam. Apply the foam through the openings shown.

13. Preparing any connections to be shaded off and/or preparing the adjacent elements for shading off and wet sanding with P1200 abrasive paper or abrasive polish.

14. Protection (after checking the tint).
Use industrial paper which does not release volatile impurities.

15. Blowing with compressed air and preparing for painting.
Wash with anti-silicon diluent and dry, then clean with a chemical buffer.

16. Painting. Follow the technical specifications and the instructions for applying enamels, recommended in the technical charts from the manufacturer of the product used.

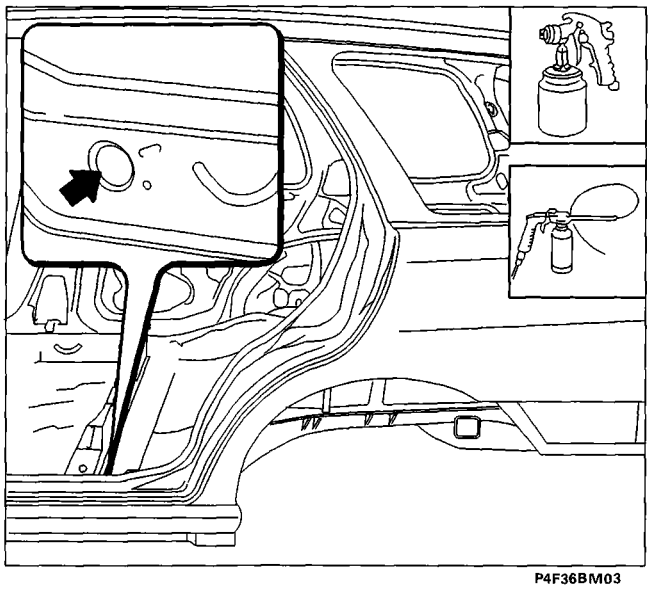
P4F36BM03

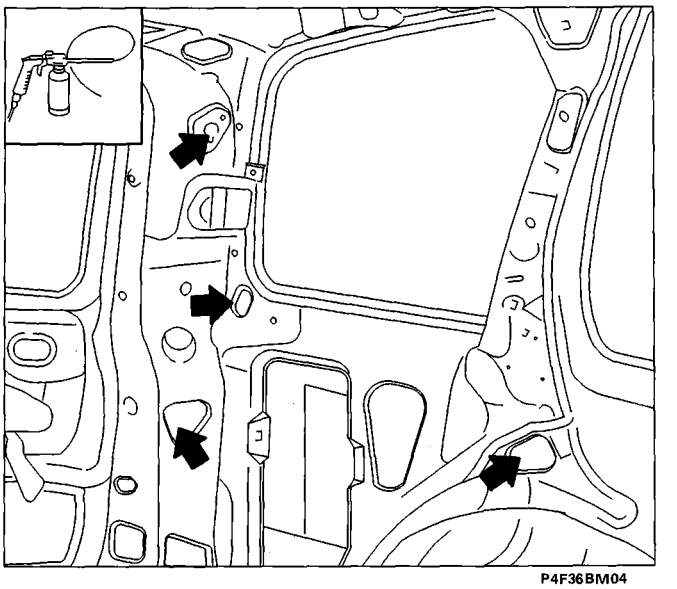
P4F36BM04

17. After painting, spray the product (wax based oil) into the parts which are not accessible, especially the continuous weld seams.

SYMBOLS

CUTTING WITH HACK SAWING MACHINE	
CUTTING WITH CIRCULAR BLADE SAW	
CLEANING WITH ROTARY BRUSH	
REMOVING SPOT WELDS WITH CHAMFERING MACHINE	
REMOVING SPOT WELDS WITH DRILL DRILLING FOR MIG WELDING	
REMOVING PANEL WITH CHISEL DRILLING FOR MIG WELDING	
APPLICATION OF ELECTRO-WELDABLE PROTECTIVES	
APPLICATION OF HIGH THICKNESS ELECTRO-WELDABLE PROTECTIVES	
CENTERING COMPONENTS	
MEASURING	
FIXING COMPONENTS	
FIXING THREADED RIVETS	

CHECKING GAPS AND ALIGNMENTS	
SPOT WELDING	
MIG WELDING	
WELDING WITH OXYACETY-LENE CANISTER	
GRINDING	
APPLYING ANTI-OXIDANT PROTECTIVES	
APPLYING SEALANTS	
APPLYING UNDERBODY PROTECTIVES	
APPLYING PAINTS	
APPLYING WAX PROTEC-TIVES	
APPLYING FOAM PRODUCTS	

STRAIGHTENING EDGES	
TRACING FOR IDENTIFYING PARTS TO BE REMOVED	
REMOVING COMPONENTS	
REMOVING EXCESS OFFCUTS	
APPLYING SEALANT	
HEATING SEALANT AND/OR FOAM TO FACILITATE RE-MOVAL OF COMPONENTS	

SYMBOLS IN ILLUSTRATIONS

- - - - CUTTING LINE
● ● ● ● SPOT WELDING
▪▪▪▪ MIG WELDING FOR FILLING
UUUUUU CONTINUOUS MIG WELDING
XXXXXXXX BRAZING

Copyright by Fiat Auto

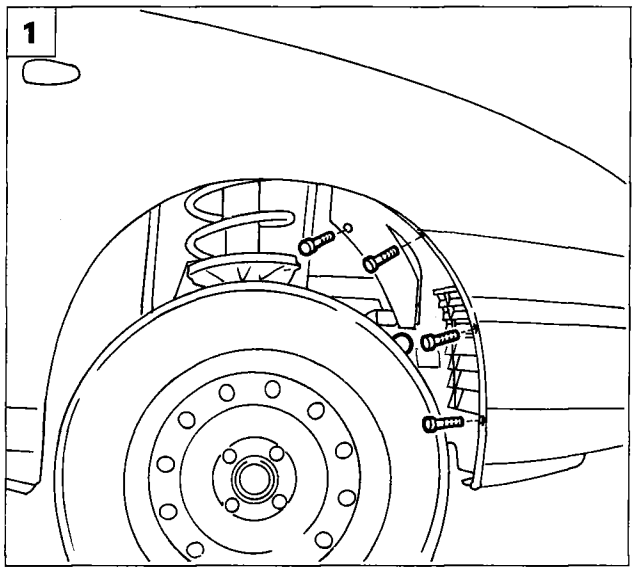

P4F38BM01

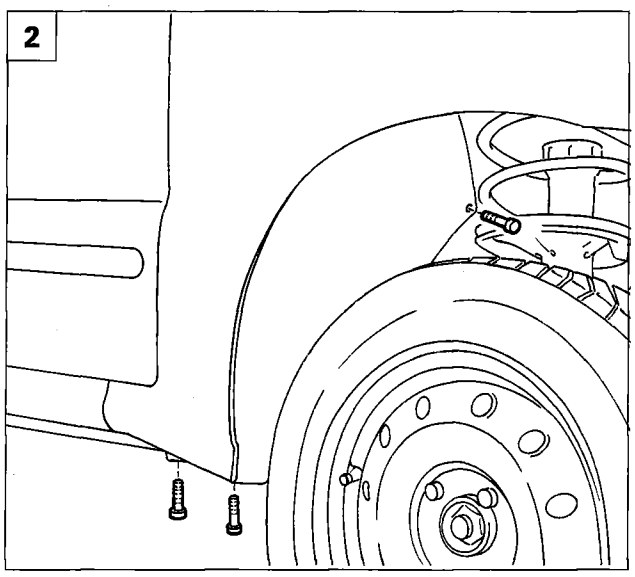

P4F38BM02

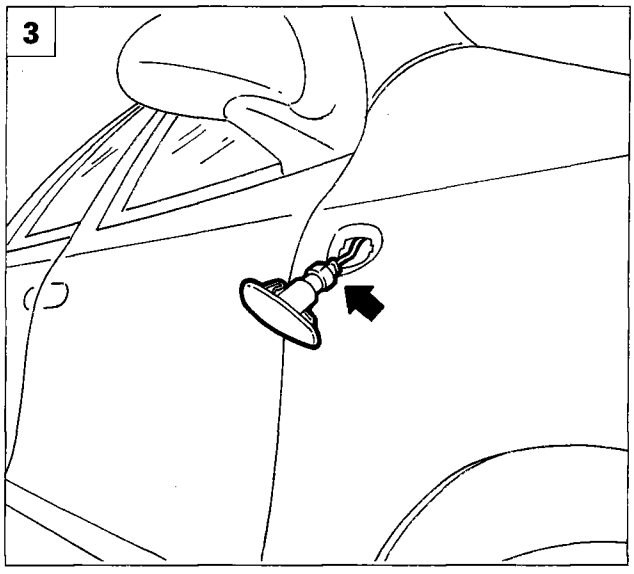

P4F38BM03

FRONT WING

Removing

Remove the front light cluster as illustrated in Section 55 - Electrical equipment.

1. Undo the fixing bolts and the button using tool 1878077000 for the front wheel arch liner.
2. Remove the front wheel arch liner, undoing the fixing bolts.
3. Remove the side direction indicator acting on the retaining tabs and disconnecting the connection.
4. Undo the bolts fixing the bumper to the front wing and the bolts fixing the wing to the front panel.
5. Undo the bolts fixing the wing to the underdoor lining.

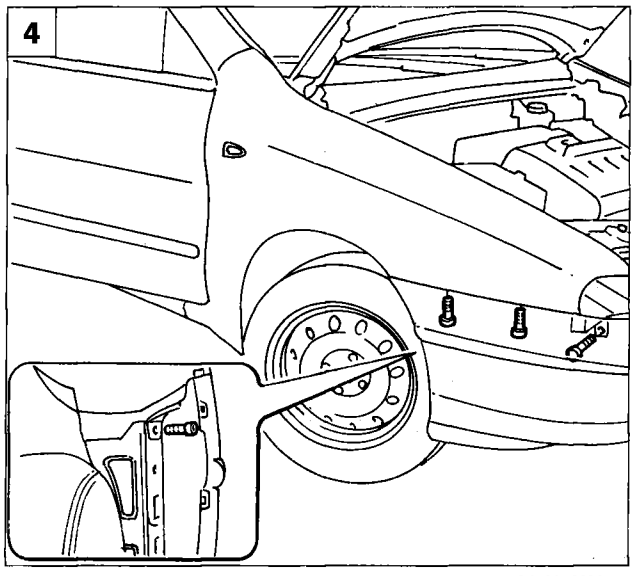

P4F38BM04

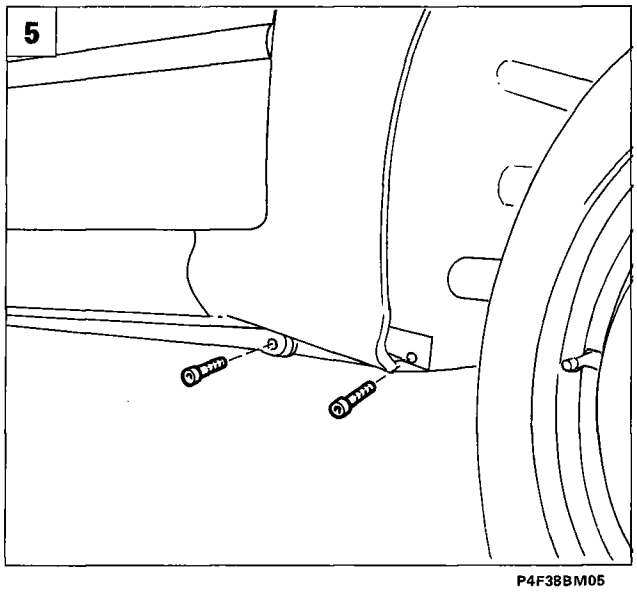

P4F38BM05

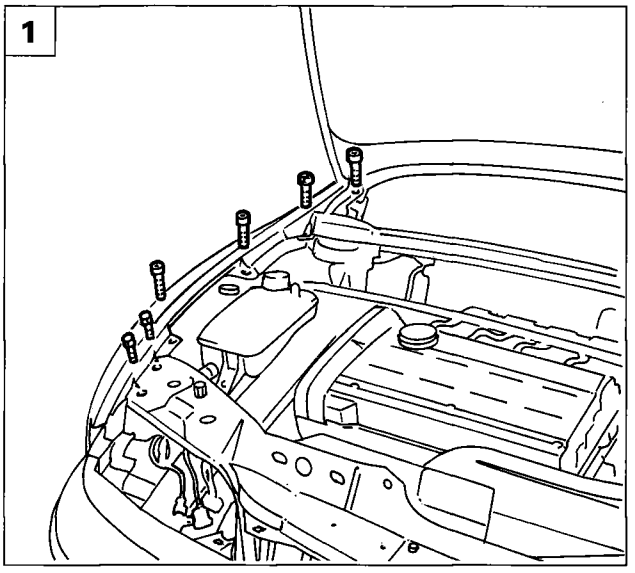

P4F39BM01

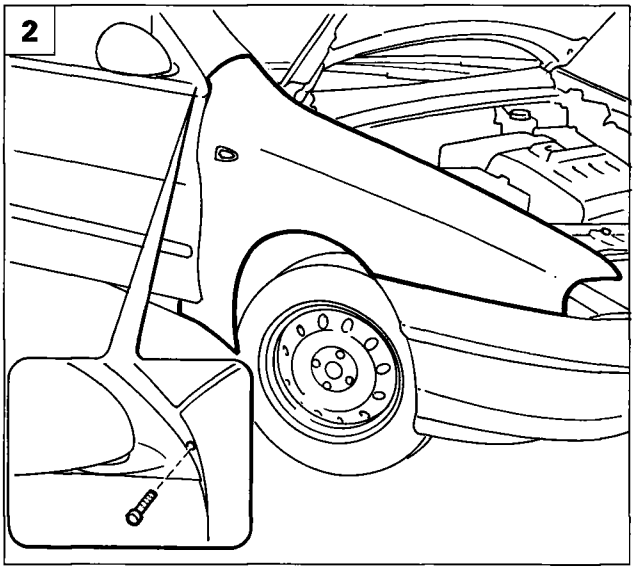

P4F39BM02

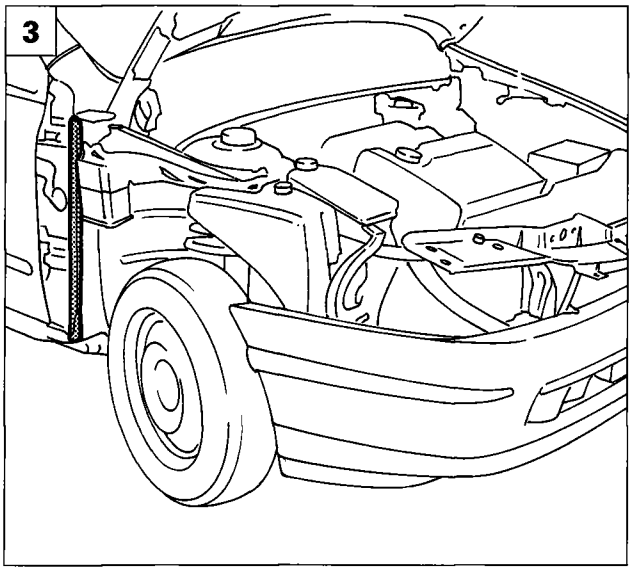

P4F39BM03

1. Undo the upper bolts fixing the wing to the vehicle and the lower cover for the window.
2. Undo the bolt fixing the wing to the front pillar cover, then separate the wing from the adhesive sealant.

Refitting

3. Remove the old sealant from the contact area with the vehicle.
4. Apply sealant to the contact area between the wing and the vehicle.
5. Place the replacement part in position, tighten the bolts fixing the wing to the vehicle, then refit all the components removed.

NOTE *Use sealant which hardens at ambient temperature such as SIKAFLEX 221 (manufactured by SIKA) or an equivalent product.*

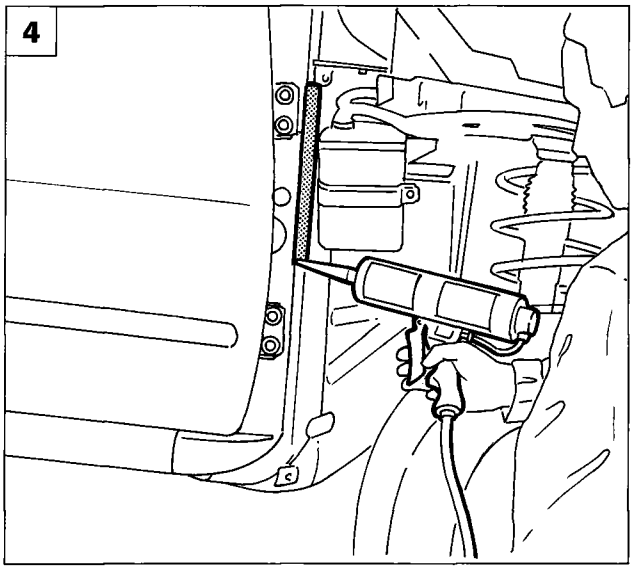

P4F39BM04

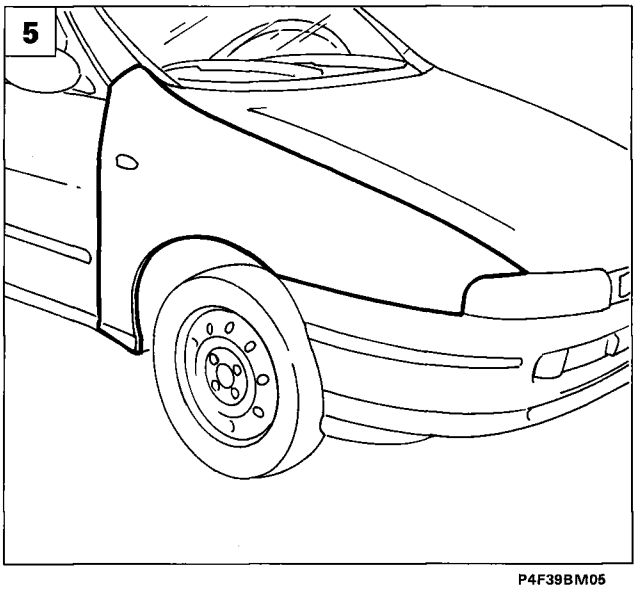

P4F39BM05

Copyright by Fiat Auto

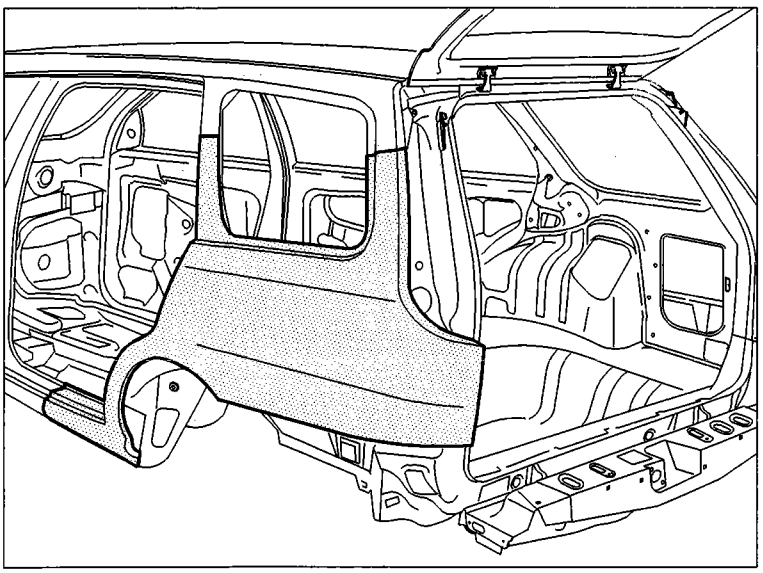

P4F40BM01

REAR WING (7090A 54)*

Replacement

(*) This number indicates the operation code given in the Flat rate manual.

The component for which the replacement procedure is given is highlighted in the diagram at the side.

Preliminary procedures and safety instructions

Refer to the description on page 33.

Preliminary dismantling

Remove the moving parts of the bodywork and interior fittings, which could impede the repair operations or be damaged during them.

Removing

Cut the part to be replaced and remove it from the vehicle.

The most important sections of the body panel are shown in order to allow the operator to adjust the position and the depth of the cutting so as not to damage the panels underneath.

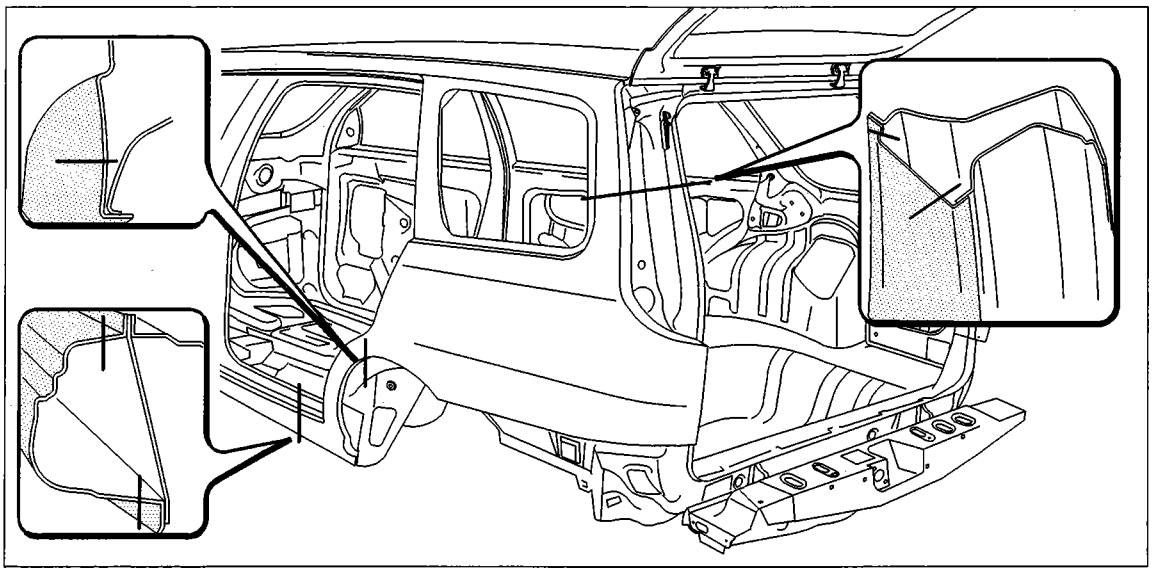

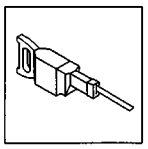

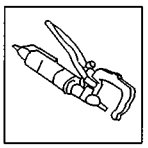

P4F33BM01

Using a saw, cut the underdoor side member and the centre and rear pillars; these parts should then be welded "edge to edge" using the continuous welding machine.

It is advisable to cut the wing using a hand saw in order not to affect the reinforcements underneath.

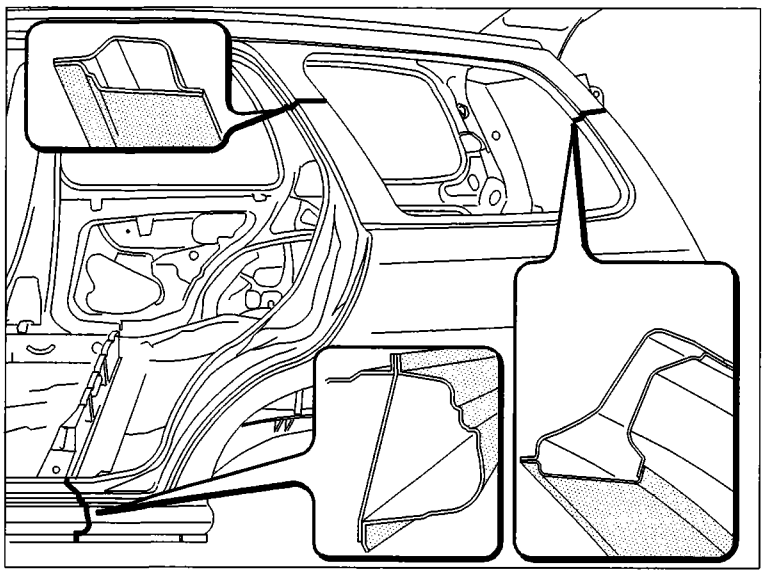

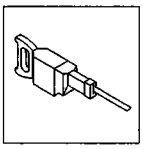

P4F41BM01

Remove the spot welds using a chamfering machine.
The cutter for removing the spot welds works on the panel which constitutes the element to be replaced as far as the panel underneath thereby removing the spot weld as shown in the right inset.

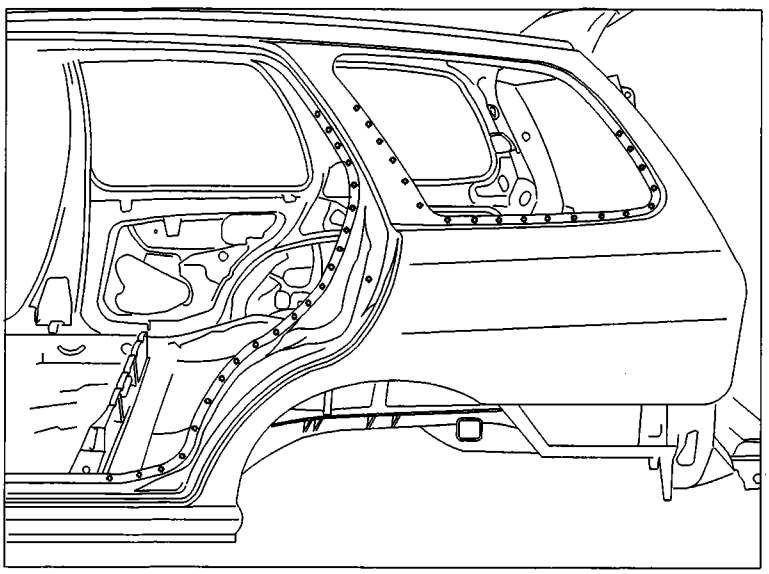

P4F41BM02

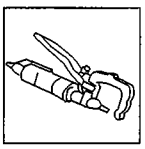

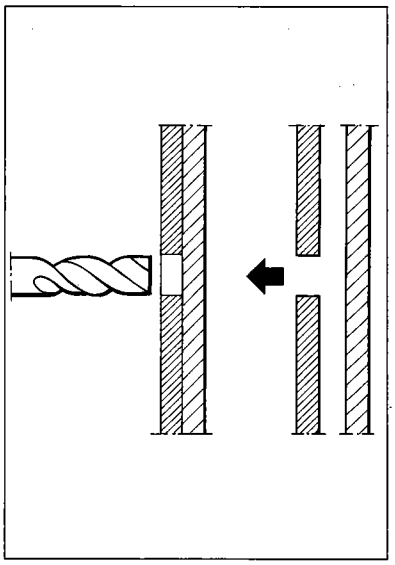

P4F41BM03

70.

Where it is not possible to use a chamfering machine, use a special cutter with an ordinary drill (it is also possible to use an ordinary drill modified as shown in the diagram below.

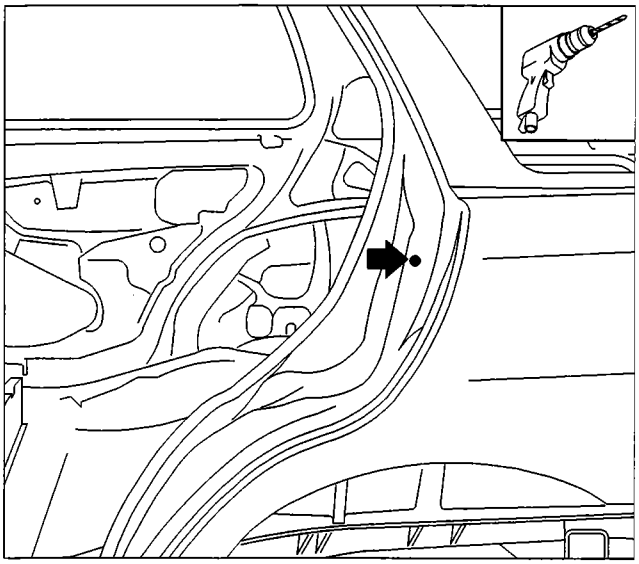

P4F42BM01

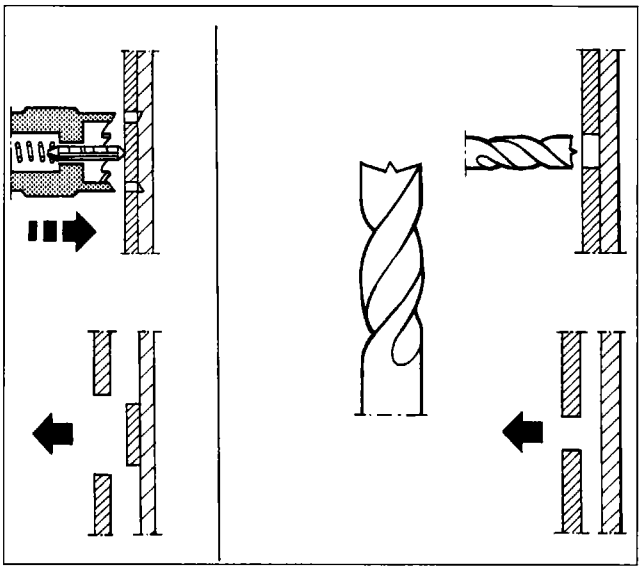

P4F42BM02

Remove the rear wing taking care not to distort the internal frames.

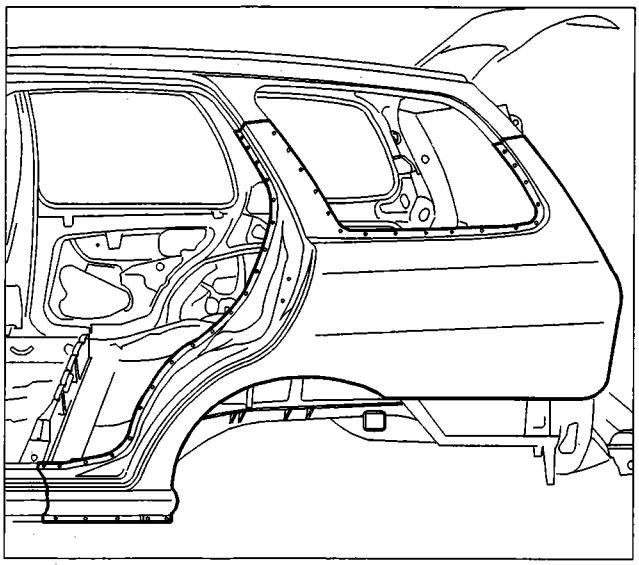

P4F42BM03

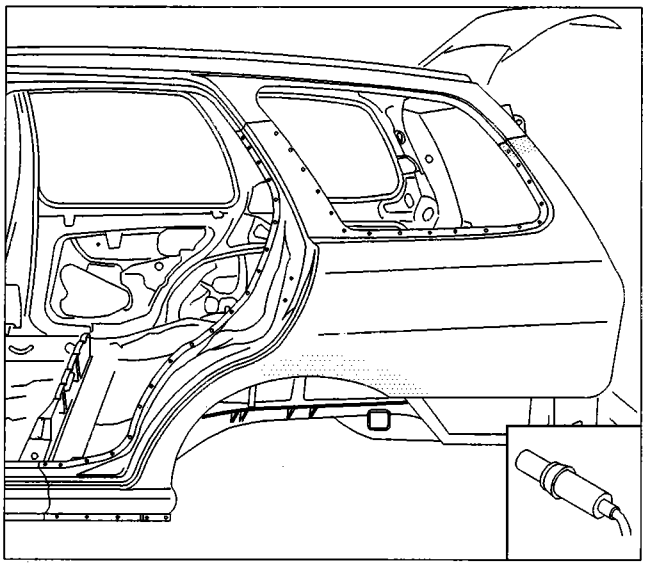

P4F42BM04

If the removal of the wing is difficult, it is advisable to heat the sealant in the area of the wheel arch or the foam in the upper part of the rear pillar using a hot air blower.

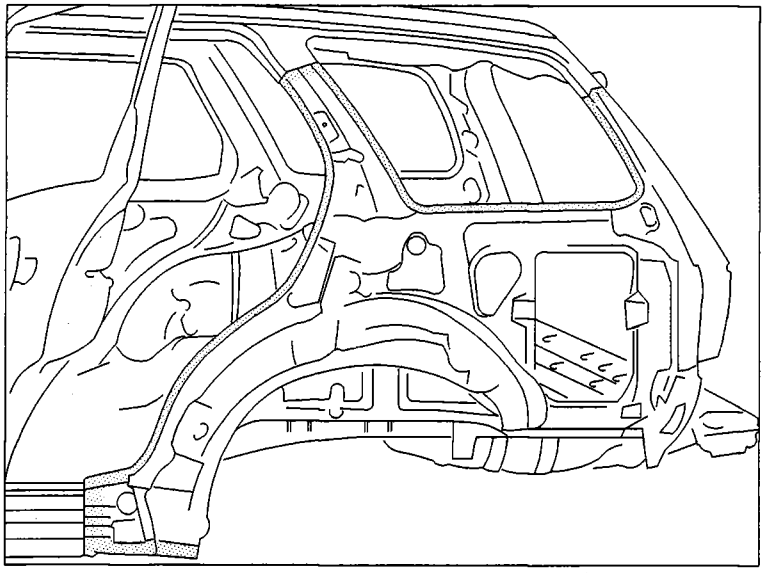

P4F43BM01

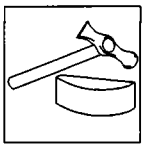

Preparing the edges of the bodyshell and the wing

- Using a hammer and dolly block, straighten the edges on the vehicle.

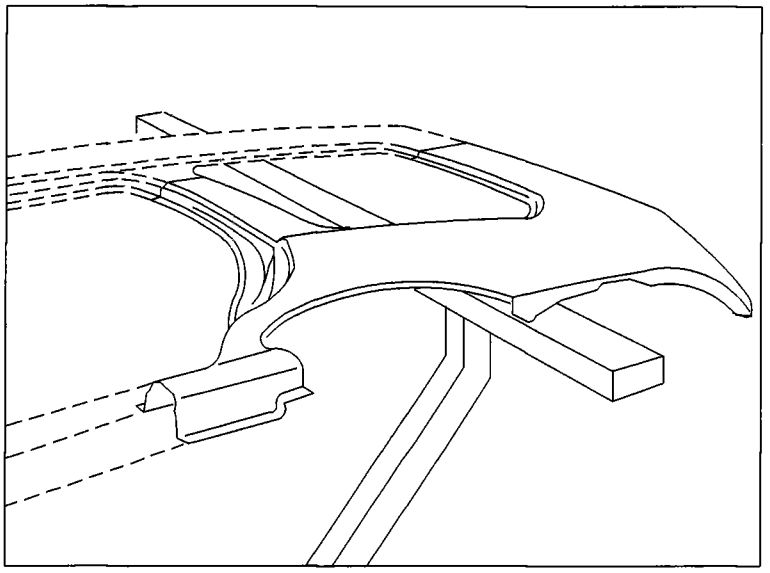

P4F43BM02

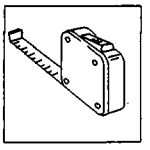

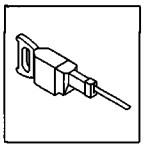

- Remove the excess parts from the replacement part so that the pillars of the replacement part are about 50 mm longer than the part removed from the vehicle.

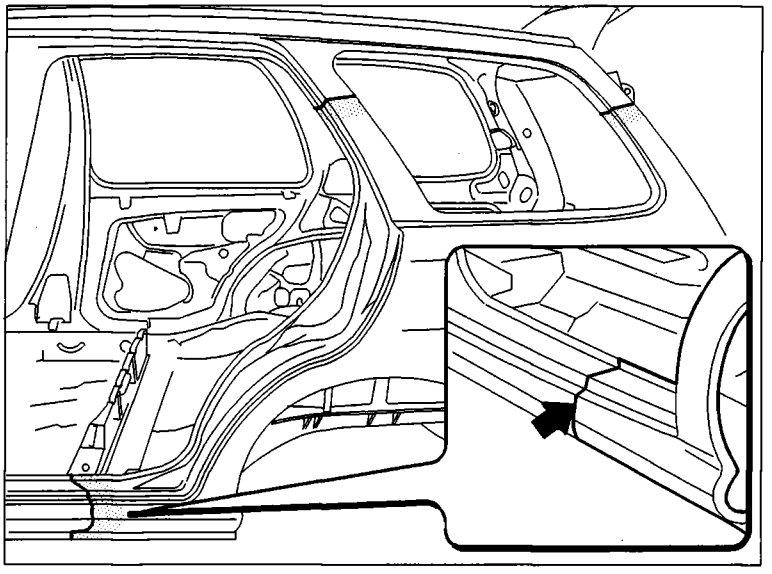

P4F43BM03

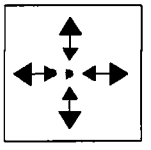

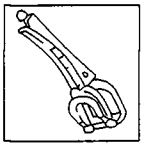

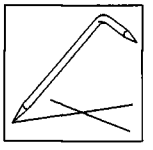

- Position the replacement part on the vehicle and check the alignment with the adjacent elements, then fix it using the special self-locking clamps;
- after having made sure that it is perfectly superimposed (pillars and underdoor), makr the parts to be removed on the bodyshell.

70.

Remove the replacement part from the vehicle and remove the offcuts from the pillars and the underdoor panel.

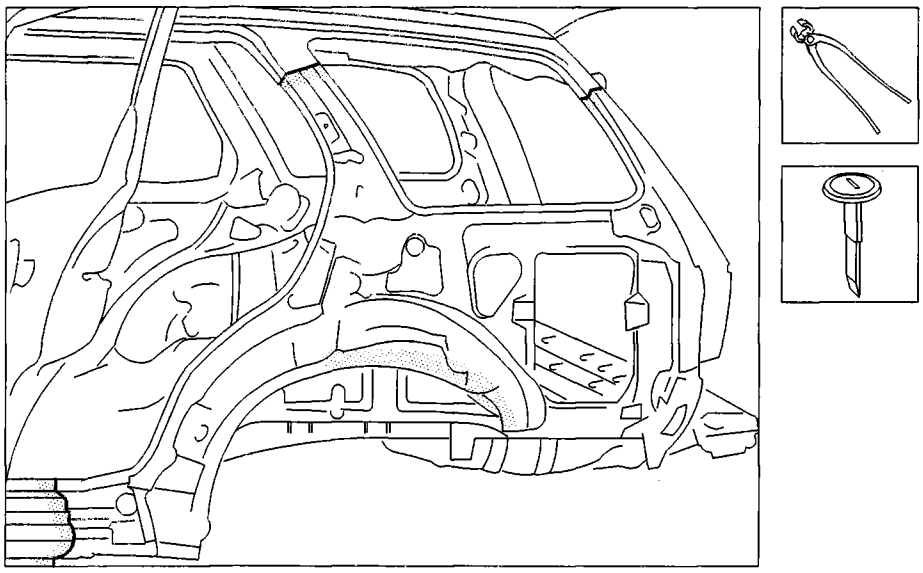

P4F44BM01

1. Drill the replacement part where the rivets will be applied with the continuous welding machine.
2. Grind the residues of the spot welding and strip all the internal and external surfaces in the areas to be welded (avoid the paint in the box sections getting burnt and not adhering properly to the panels as this will adversely affect the subsequent protection operations).
3. Apply electro-weldable anti-rust protection to the internal edges to be welded.

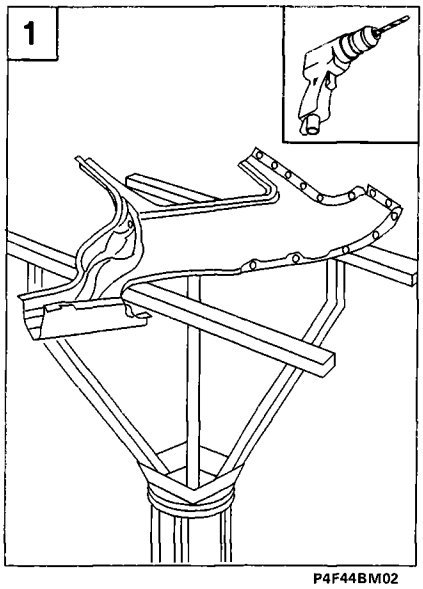

P4F44BM02

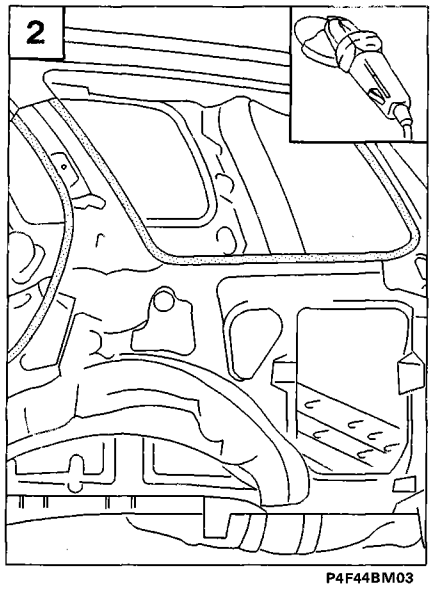

P4F44BM03

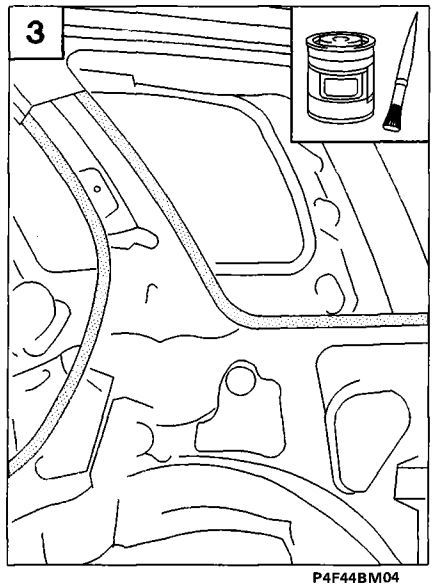

P4F44BM04

Apply sealant between the wheel arch and the wing along the section shown in the diagram.

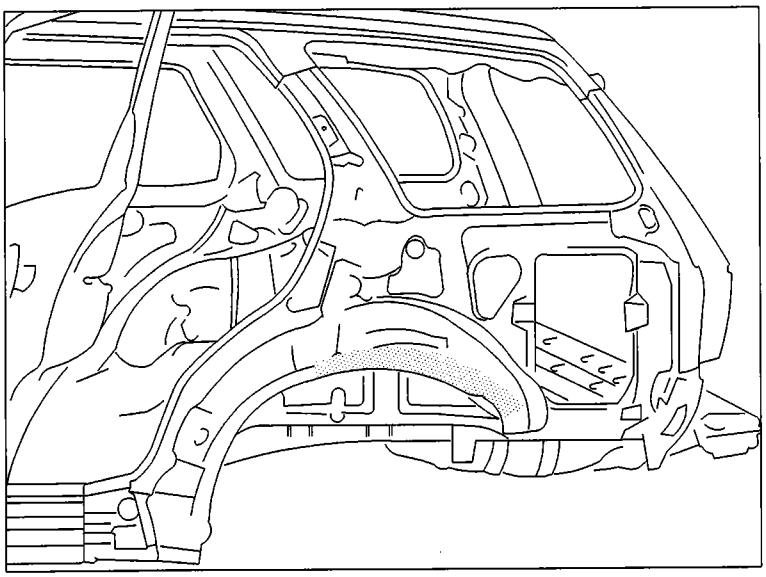

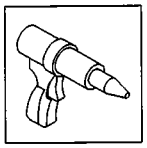

P4F45BM01

Positioning the wing

Position the replacement part on the vehicle, checking the alignment with the adjacent elements and checking that it is perfectly aligned with the components to be welded edge to edge.

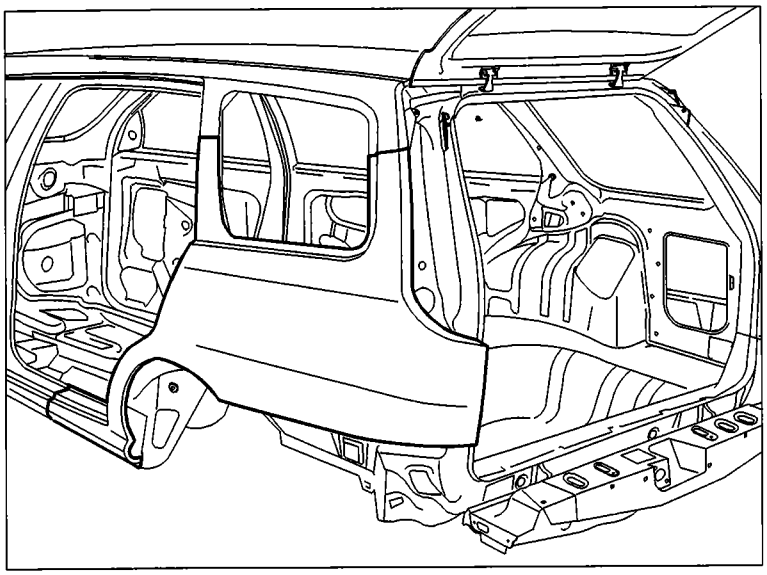

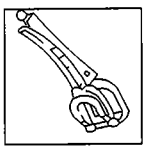

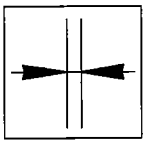

P4F45BM02

Welding the wing

Start the welding operations using the continuous welding maching and tack the corners of the pillars and the underdoor panel.

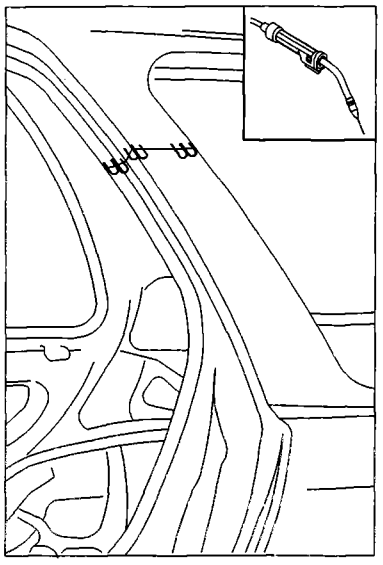
P4F46BM01

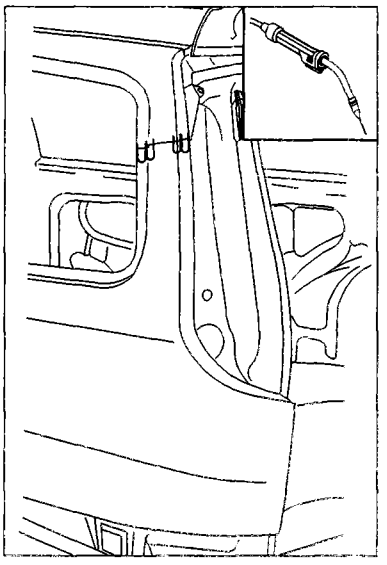
P4F46BM02

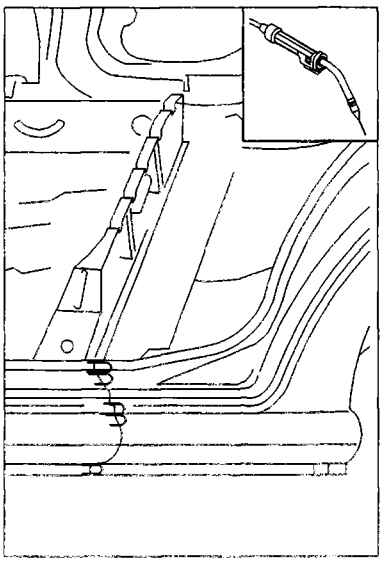
P4F46BM03

Carry out the electrical spot welding in the areas shown.

During the electrical spot welding, it is necessary for the panels to be welded to match perfectly and be extremely clean in order to prevent excessive resistance which leads to burning and consequent fragility of the weld.

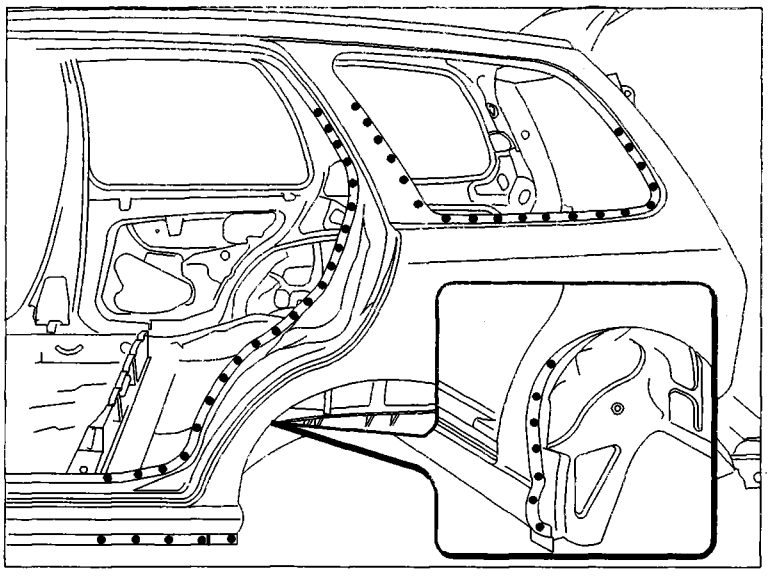
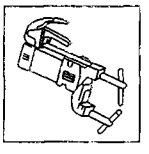
P4F46BM04

Using the continuous welding machine, weld the pillars and the underdoor panel, proceeding in chain-stitch style in order not to distort the panels.

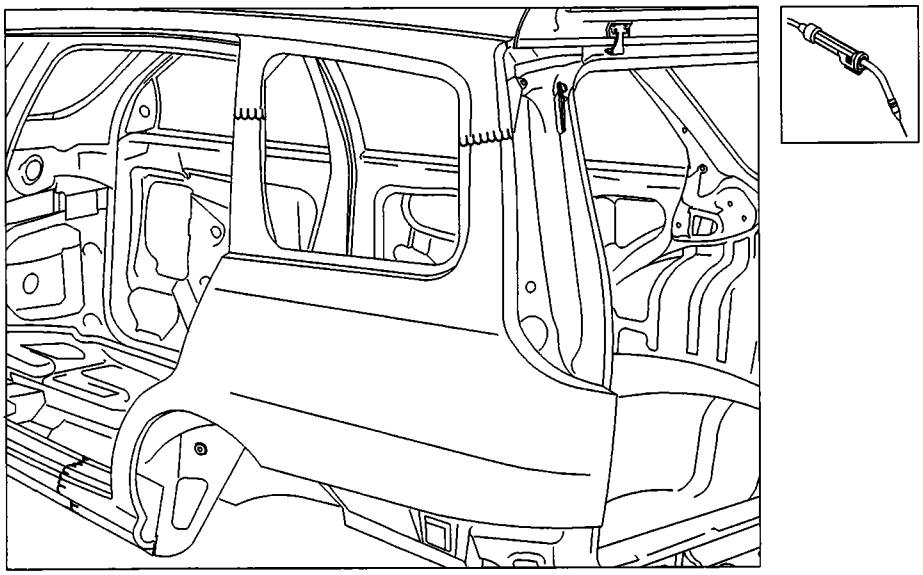

P4F47BM01

Fill the openings made previously in the replacement part.

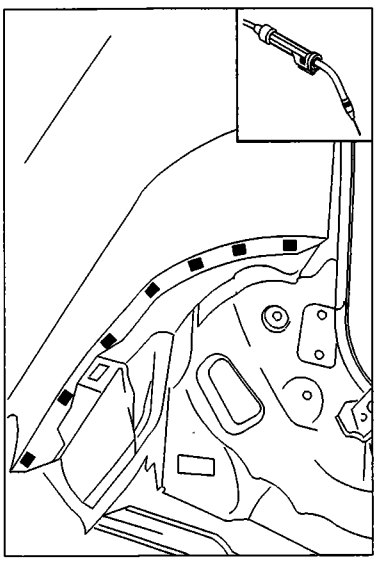

P4F47BM02

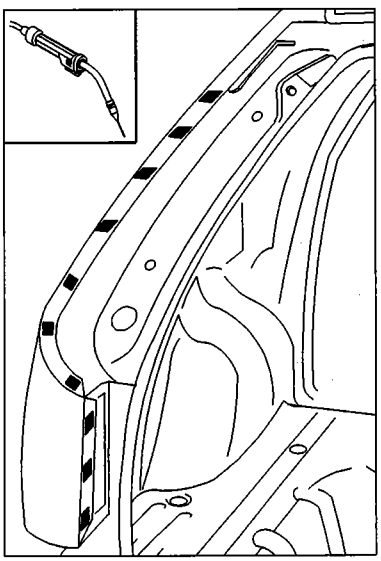

P4F47BM03

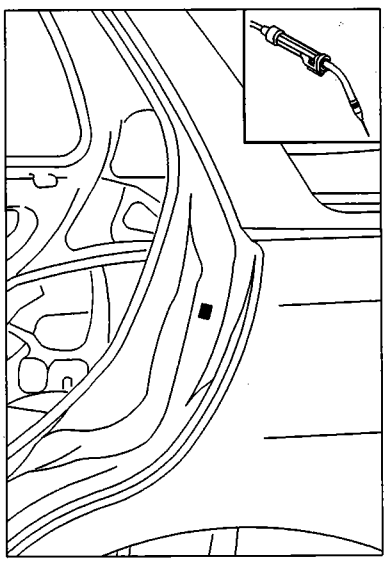

P4F47BM04

Finishing operations

Using a disc grinder, level the welds made on the pillars and the underdoor panel with the continuous welding machine.

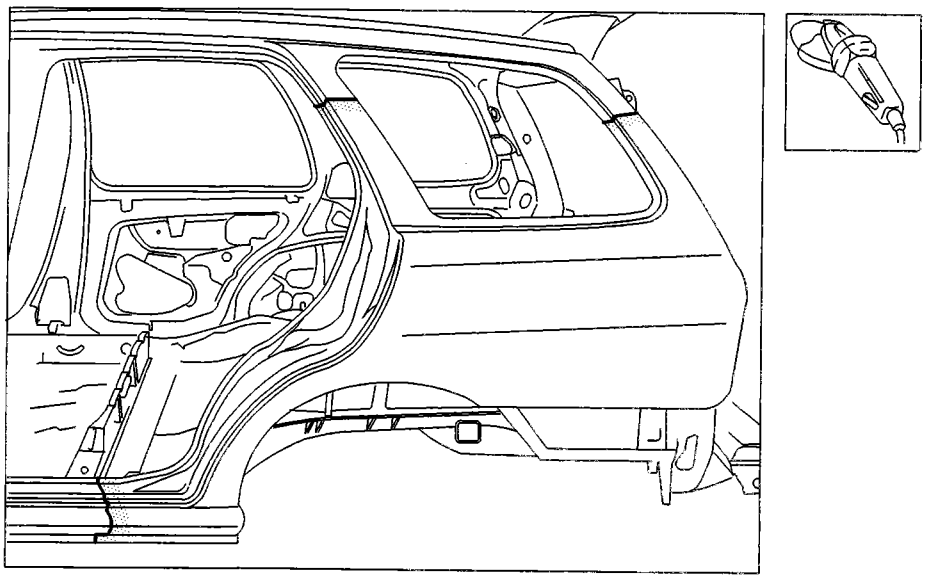

P4F48BM01

Level the areas where the filling was carried out.

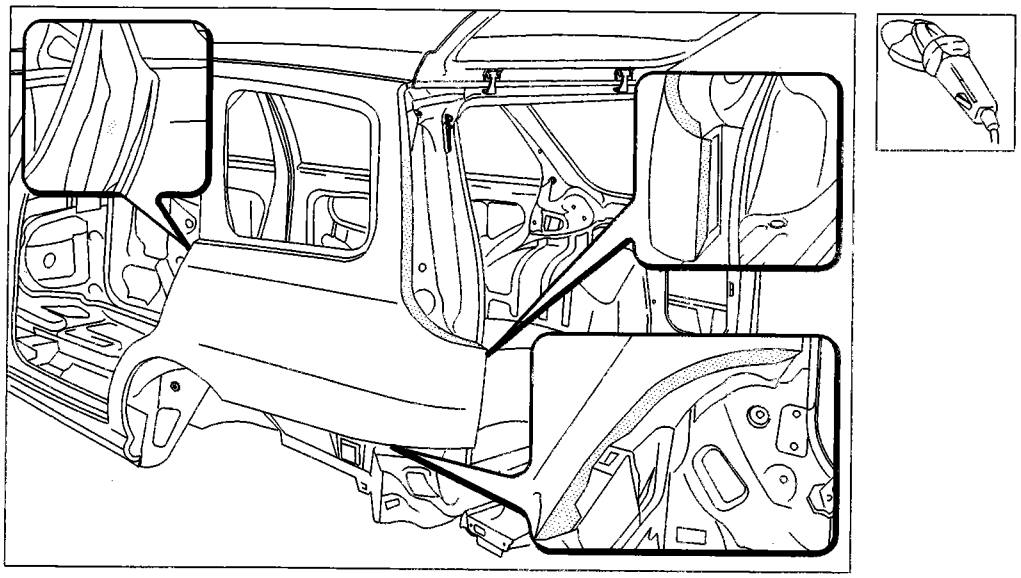

P4F48BM02

Protections

Refer to the instructions on pages 34 - 36.

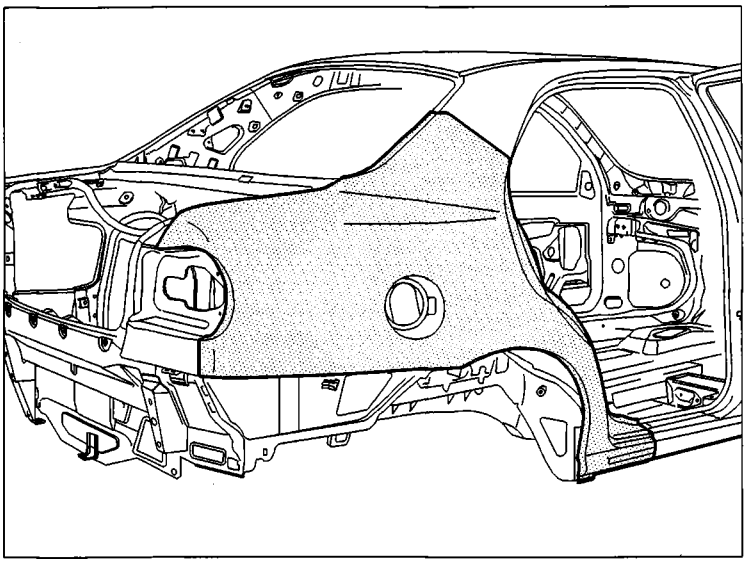

P4F49BM01

REAR WING AND WHEEL ARCH (with luggage compartment side lining and lock barrel) (7090A 54)*

Replace

(*) This number indicates the operation code given in the Flat rate manual.

The component for which the replacement procedure is given is highlighed in the diagram at the side.

Preliminary procedures and accident prevention instructions

Refer to the description on page 33.

Preliminary dismantling

Remove the moving parts of the bodywork and interior fittings, which could impede the repair operations or be damaged during them.

Removing wing

Cut the component to be replaced and remove it from the vehicle.

The most important sections of the body panel are shown in order to allow the operator to adjust the position and the depth of the cutting so as not to damage the panels underneath.

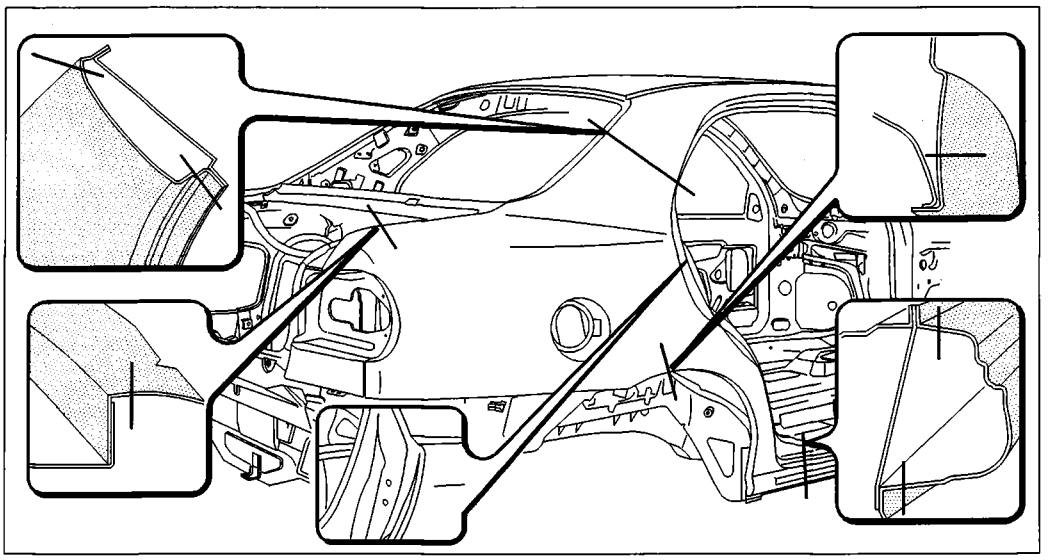

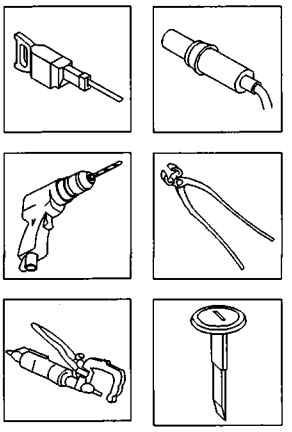

P4F49BM02

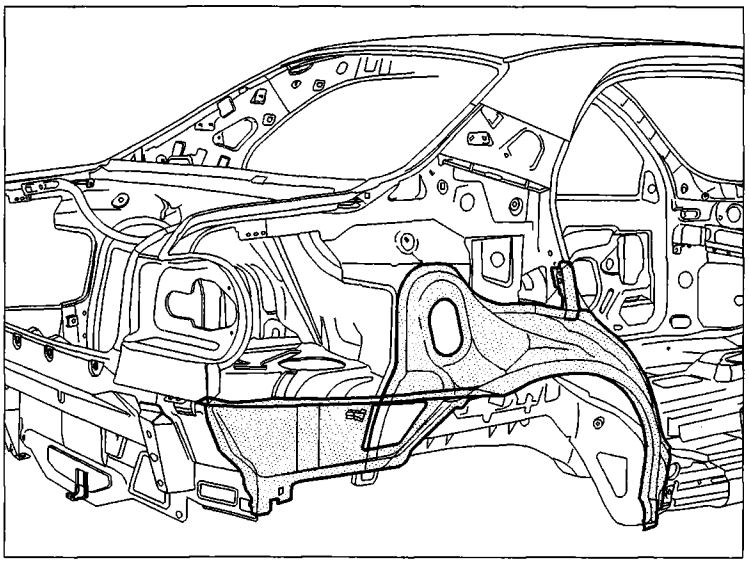

P4F50BM01

Replacing wheel arch, luggage compartment side lining and lock barrel (7090G72)*

(*) This number indicates the operation code given in the Flat rate manual.

The components for which the replacement procedure is given are highlighted in the diagram at the side.

Removing wheel arch, luggage compartment side lining and lock barrel

Cut the components to be replaced and remove them from the vehicle.

The most important sections of the body panel are shown in order to allow the operator to adjust the position and the depth of the cutting so as not to damage the panels underneath.

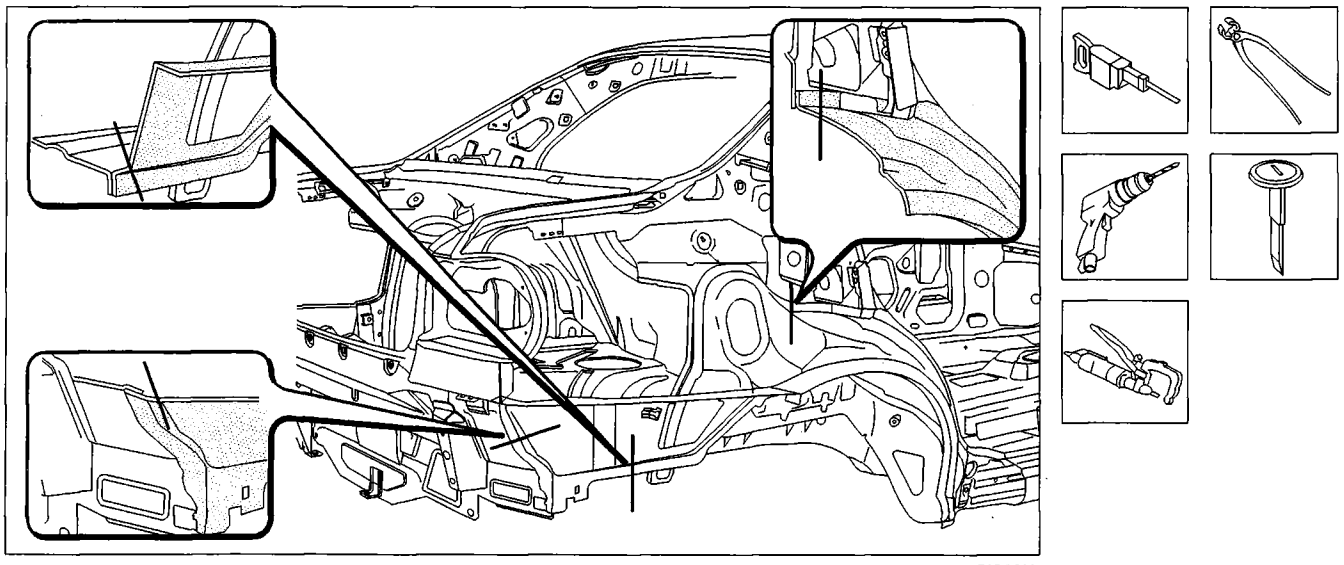

P4F50BM02

Preparing the edges of the bodyshell

Straighten any distortions to the vehicle and prepare it as described on page 34.

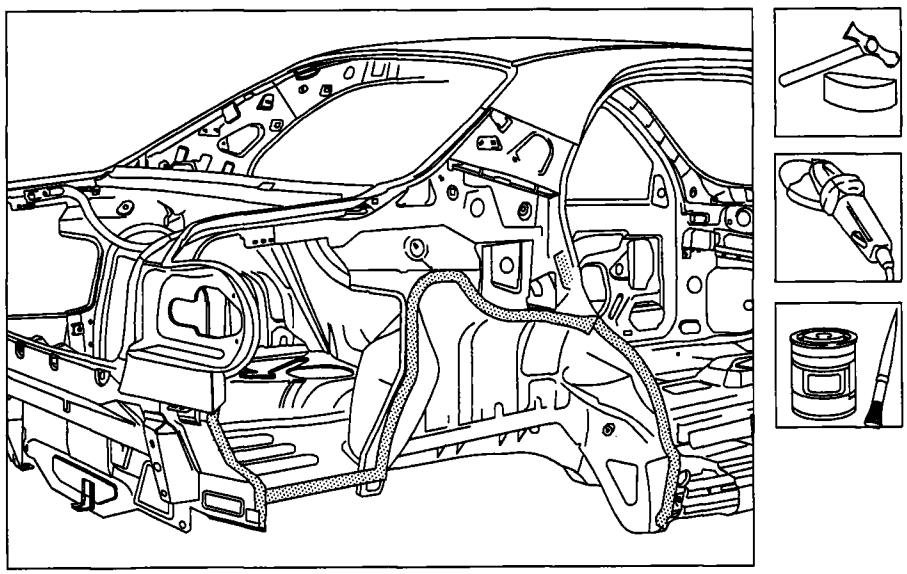

P4F51BM01

Preparing the wheel arch, luggage compartment side lining and lock barrel

1. Grind the internal and external edges.
2. Make equidistant holes in the front edge of the wheel arch.
3. Apply an electro-weldable anti-rust protective to the internal edges to be welded.

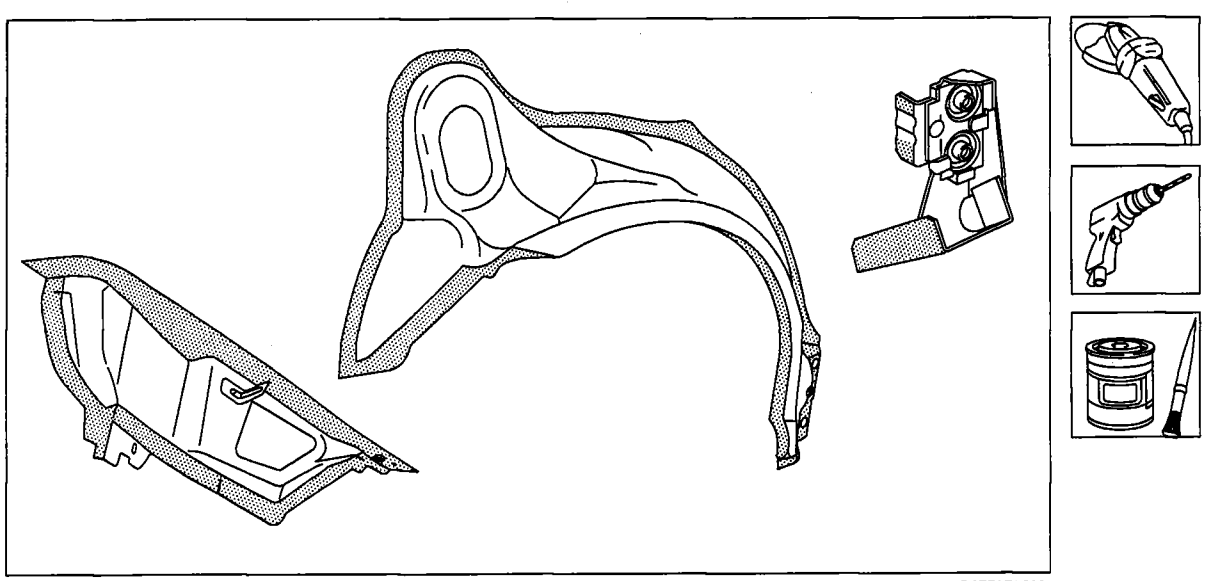

P4F51BM02

Positioning the wheel arch

Position the replacement part on the vehicle and check that it is perfectly aligned with the adjacent elements.

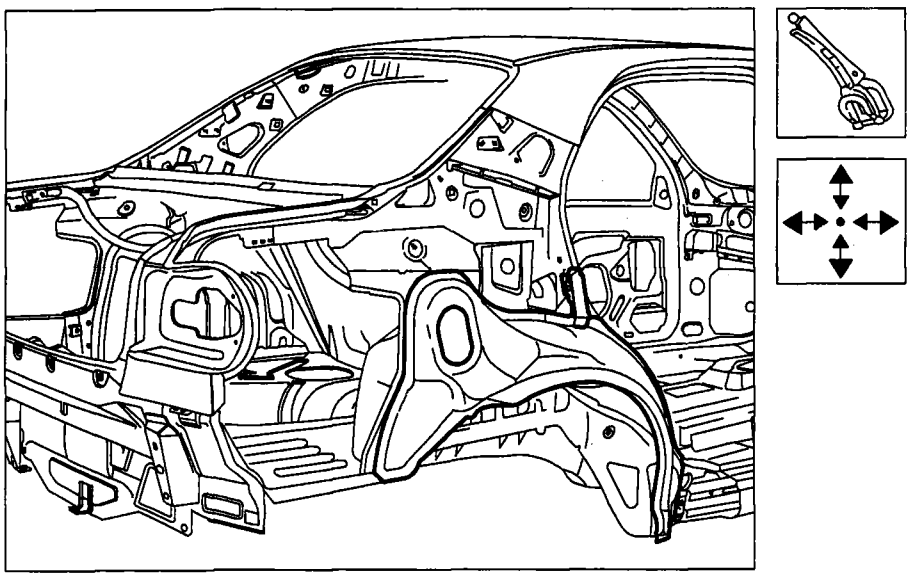

P4F52BM01

Welding the wheel arch, luggage compartment side lining and lock barrel

1. Carry out the MIG welding to fill the holes made previously in the replacement part.
2. Carry out the electrical spot welding.

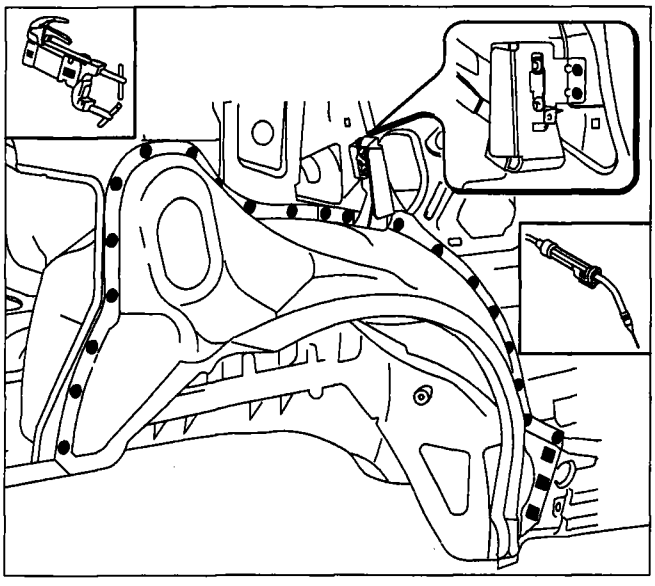

P4F52BM02

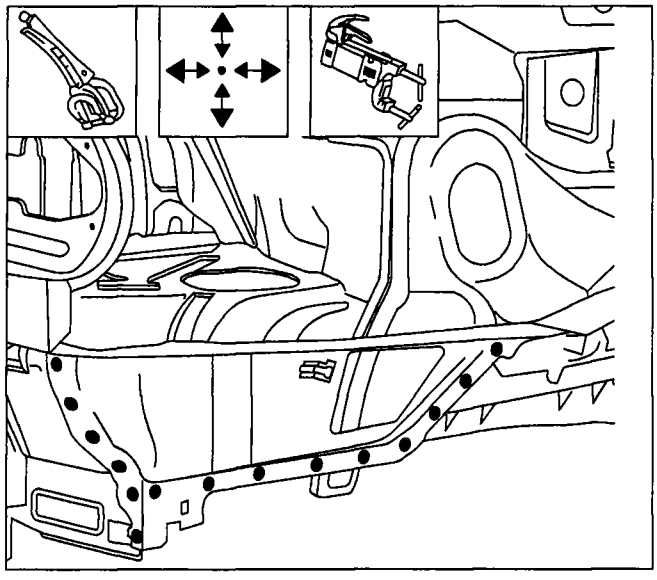

P4F52BM03

Proceed with fitting the rear wing.

Preparing the edges of the bodyshell

Straighten any distortions to the bodyshell and prepare it as described on page 34.

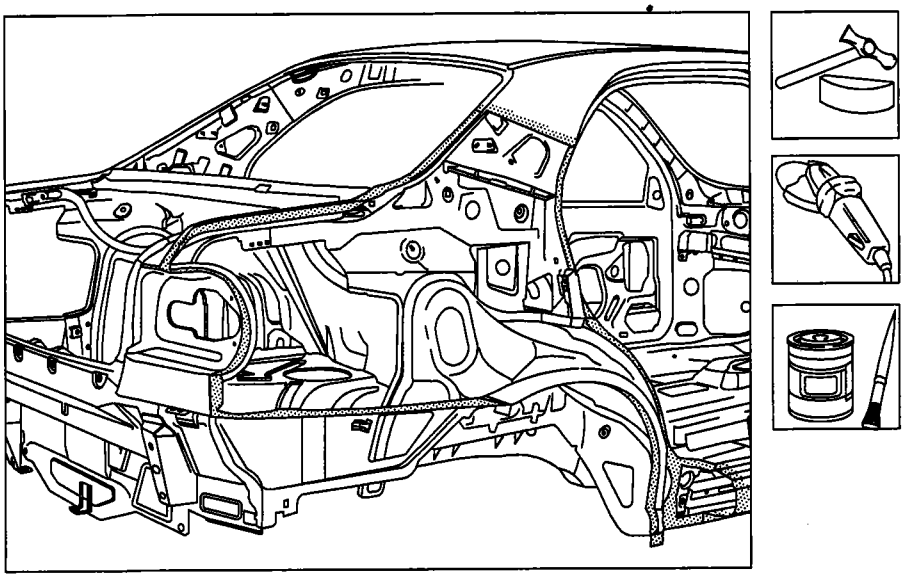

P4F53BM01

Adjusting the wing

1. Remove the excess from the replacement part so that it is 20 mm longer than the part removed from the vehicle.
2. Position the replacement part on the vehicle, check that it is perfectly superimposed and mark it.
3. Remove the excess part from the vehicle.

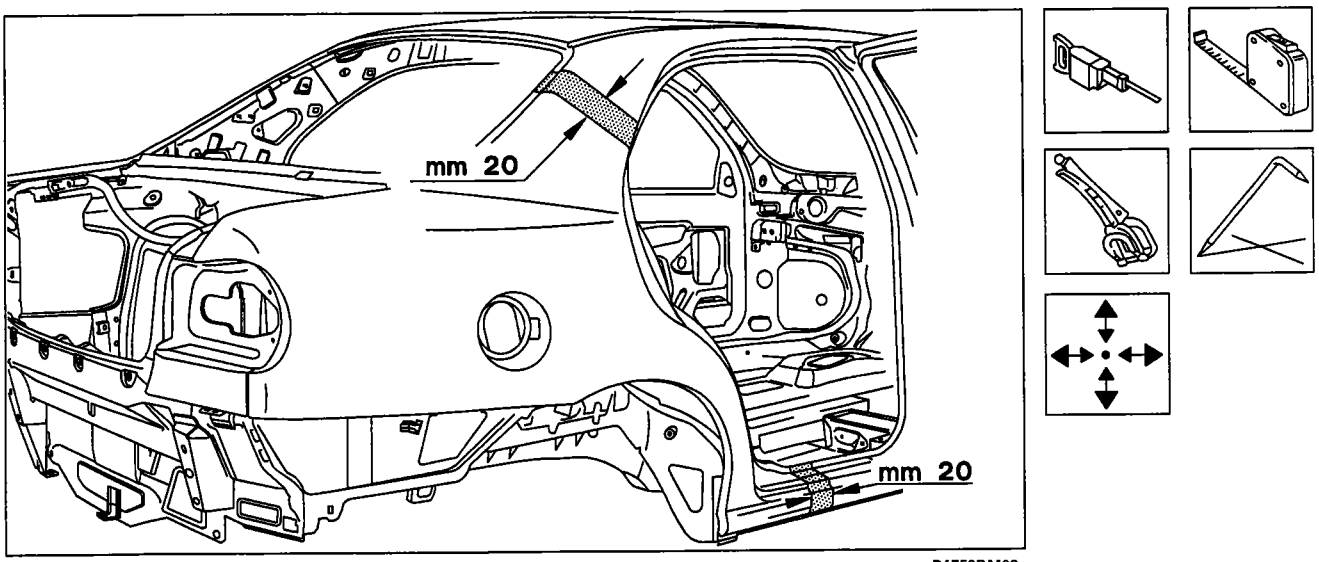

P4F53BM02

70.

Preparing the wing and positioning it on the bodyshell

1. Make equidistant holes in the edges of the part as shown in the diagram.
2. Grind the internal and external edges.
3. Apply an electro-weldable anti-rust protective to the internal edges to be welded.
4. Using the spot welder, weld the fuel filler.
5. Reposition the replacement part on the vehicle and check that it is perfectly aligned with the adjacent elements.

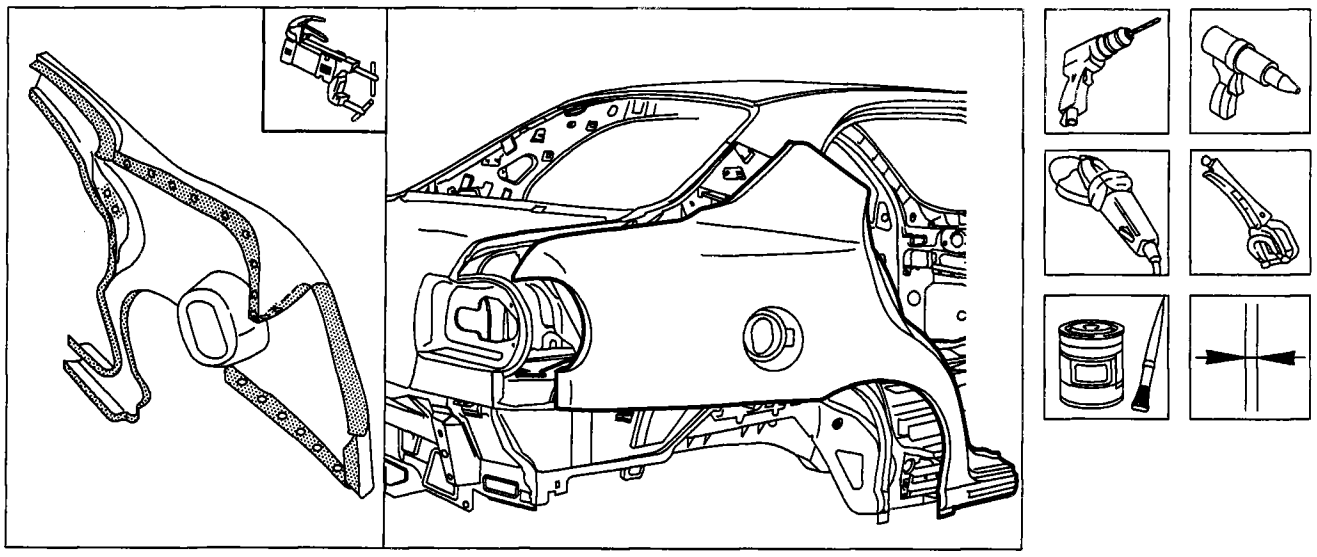

P4F54BM01

Welding the wing

1. Tack the corners with the MIG welder.
2. Carry out the electrical spot welding.
3. Weld the pillar and the underdoor panel using chain welding in order not to distort the panels.

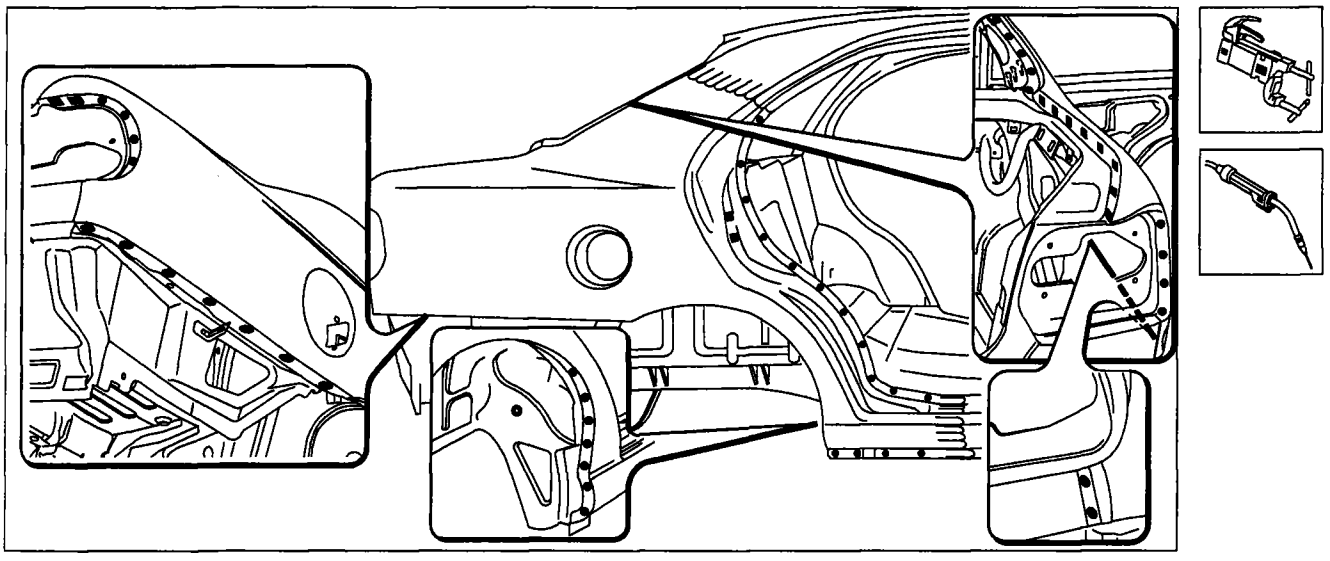

P4F54BM02

Finishing operations

Level the welds made using the MIG welder.

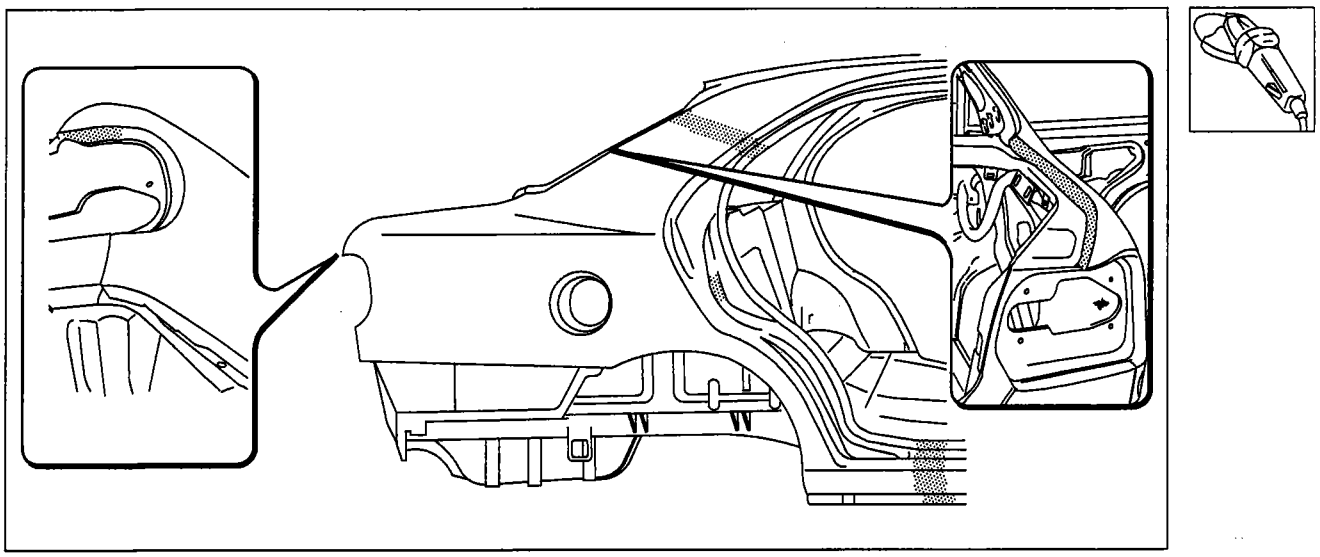

P4F55BM01

Protections

Refer to the instructions given previously on pages 34-36.

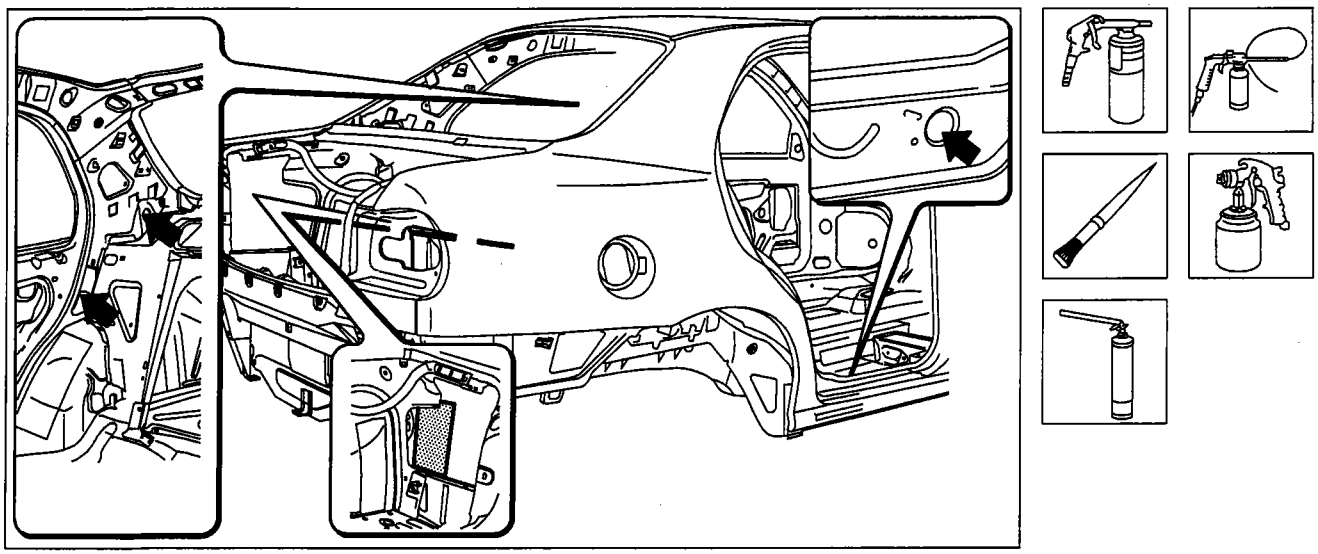

P4F55BM02

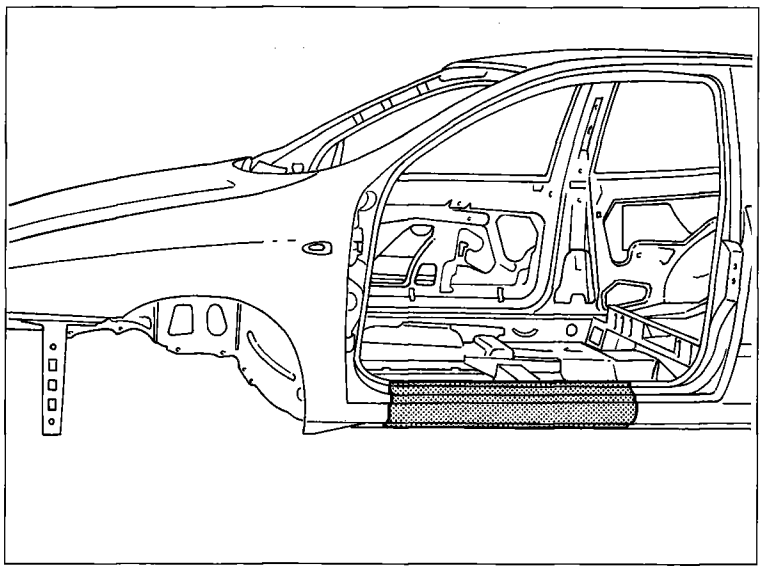

P4F56BM01

SIDE MEMBER AND UNDERDOOR REINFORCEMENT (7090G 62)*

Replacing

(*) This number indicates the operation code given in the Flat rate manual.

The component for which the replacement procedure is given is highlighed in the diagram at the side.

Preliminary procedures and accident prevention instructions

Refer to the description on page 33.

Preliminary dismantling

Remove the moving parts of the bodywork and interior fittings, which could impede the repair operations or be damaged during them.

Removing external side member

Cut the component to be replaced and remove it from the vehicle.

The most important sections of the body panel are shown in order to allow the operator to adjust the position and the depth of the cutting so as not to damage the panels underneath.

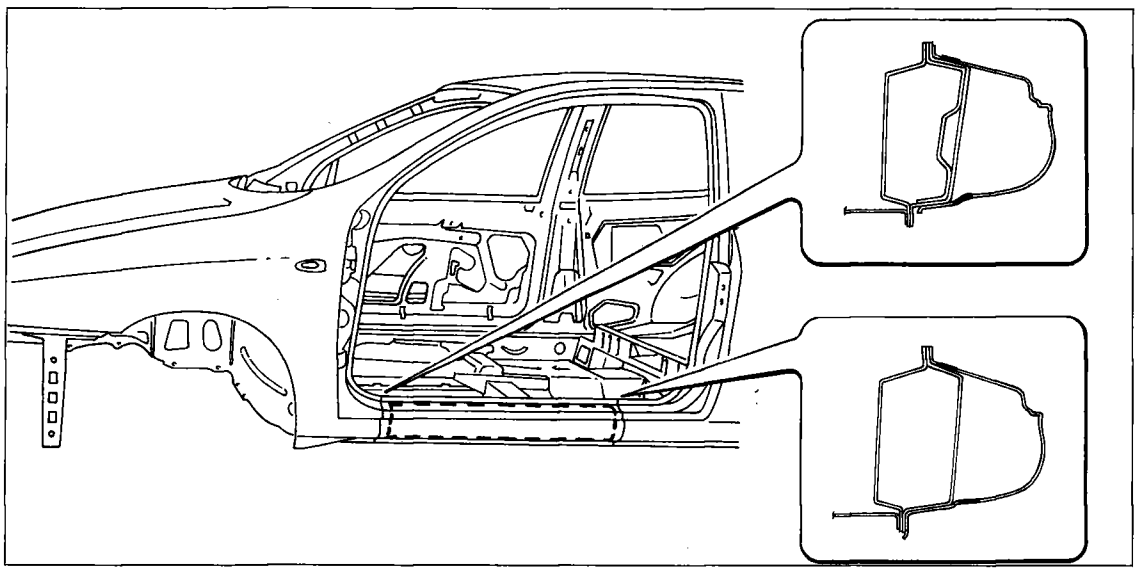

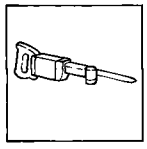

P4F56BM02

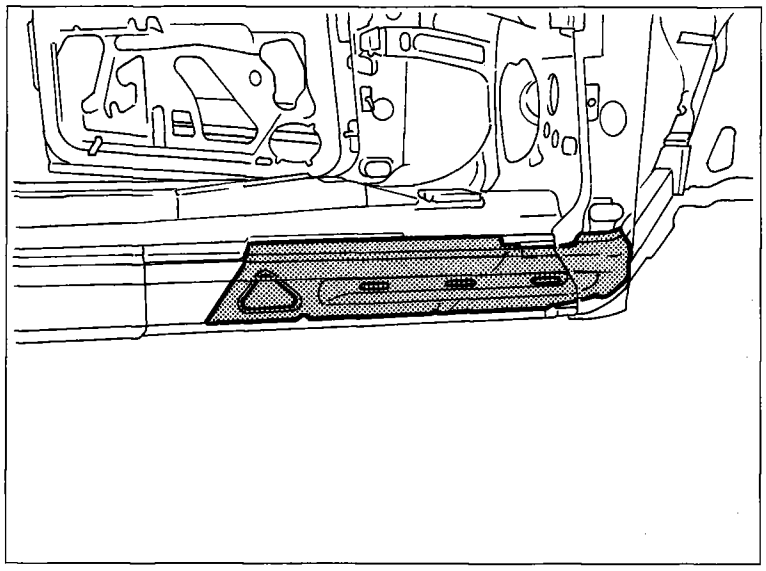

P4F57BM01

Replacing underdoor reinforcement (7090G 30)*

(*) This number indicates the operation code given in the Flat rate manual.

The component for which the replacement procedure is given is highlighed in the diagram at the side.

Removing underdoor reinforcement

Cut the component to be replaced and remove it from the vehicle.

The most important sections of the body panel are shown in order to allow the operator to adjust the position and the depth of the cutting so as not to damage the panels underneath.

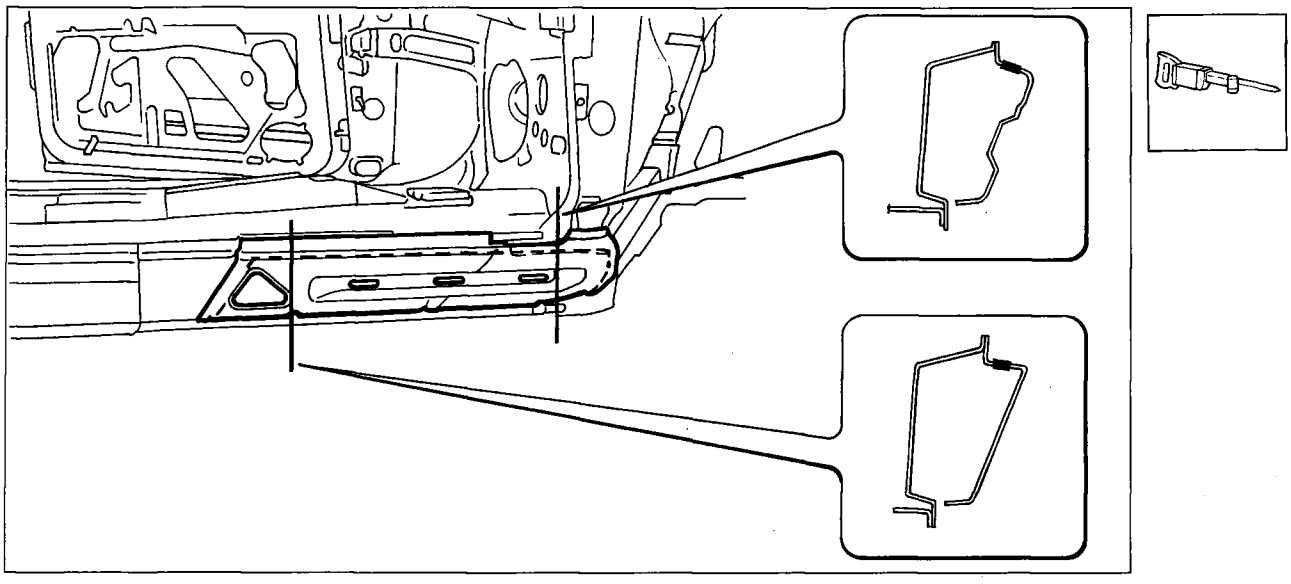

P4F57BM02

70.

Preparing the edges of the bodyshell

Straighten any distortions to the bodyshell and prepare it as described on page 34.

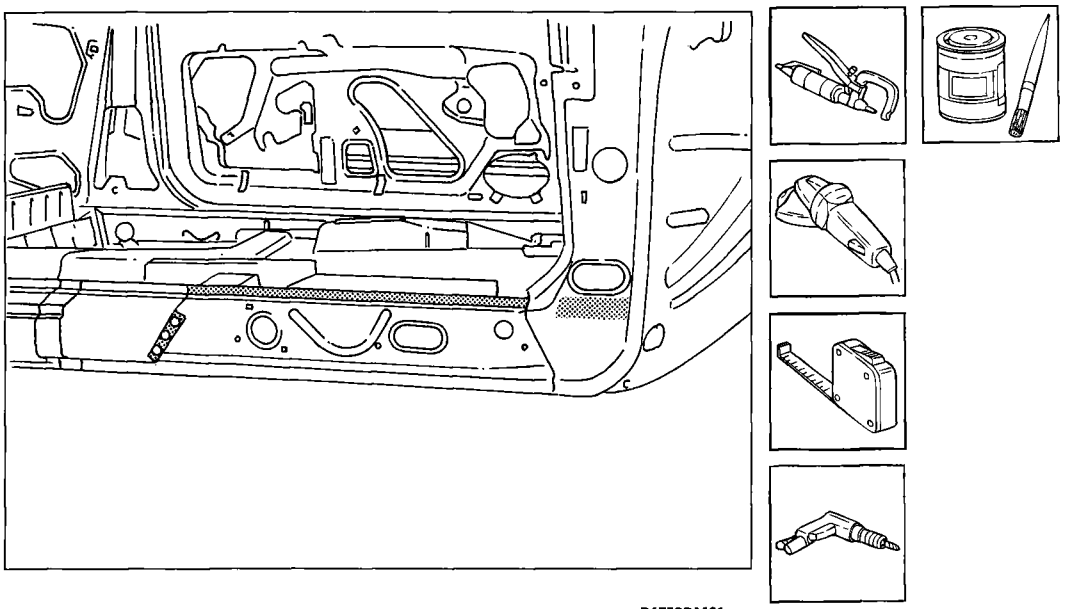

P4F58BM01

Preparing the underdoor inner reinforcement

1. Grind the internal and external edges.
2. Apply an electro-weldable anti-rust protective to the internal edges to be welded.

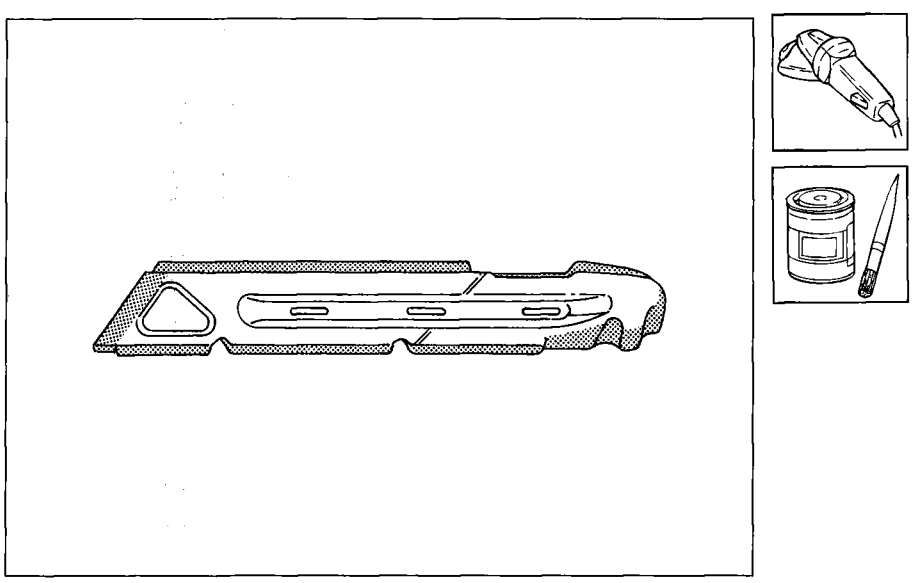

P4F58BM02

Positioning the underdoor inner reinforcement

Position the replacement part on the vehicle and check that it is perfectly aligned with the adjacent elements.

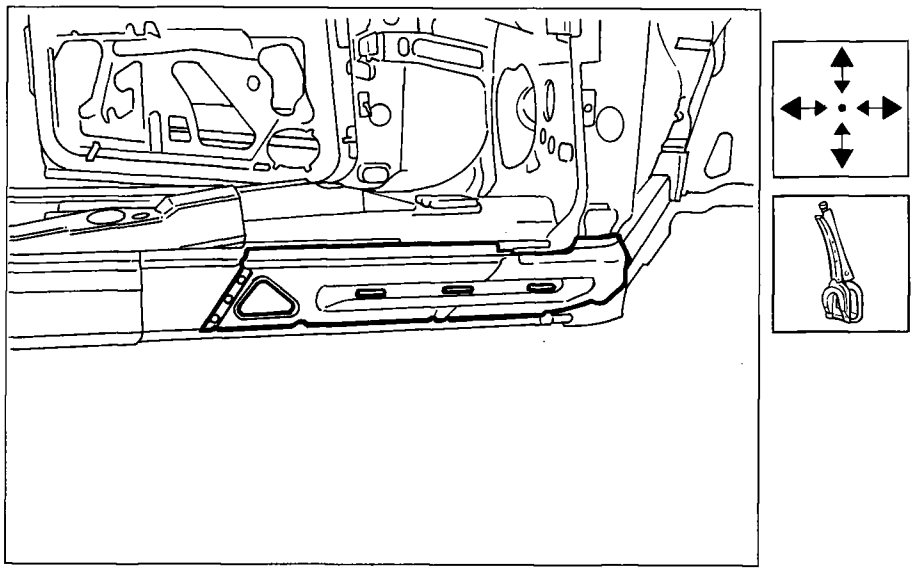

P4F59BM01

Welding the underdoor inner reinforcement

Carry out the electrical spot welding and, using the MIG welder, fill the holes made previously.

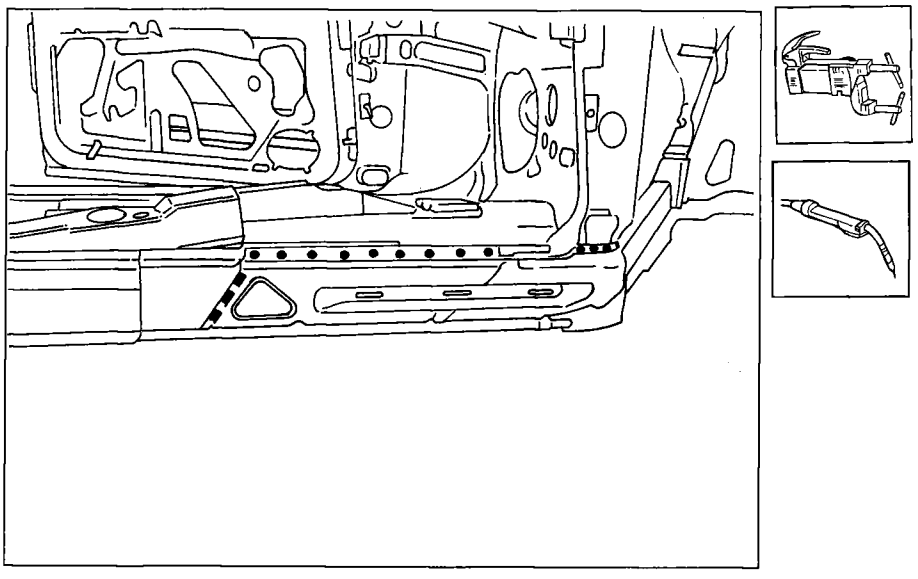

P4F59BM02

Proceed with fitting the external side member.

Copyright by Fiat Auto

70.

Preparing the edges of the bodyshell

1. Remove the weld residues using a disc grinder.
2. Straighten any distortions to the bodyshell and prepare it as described on page 34.

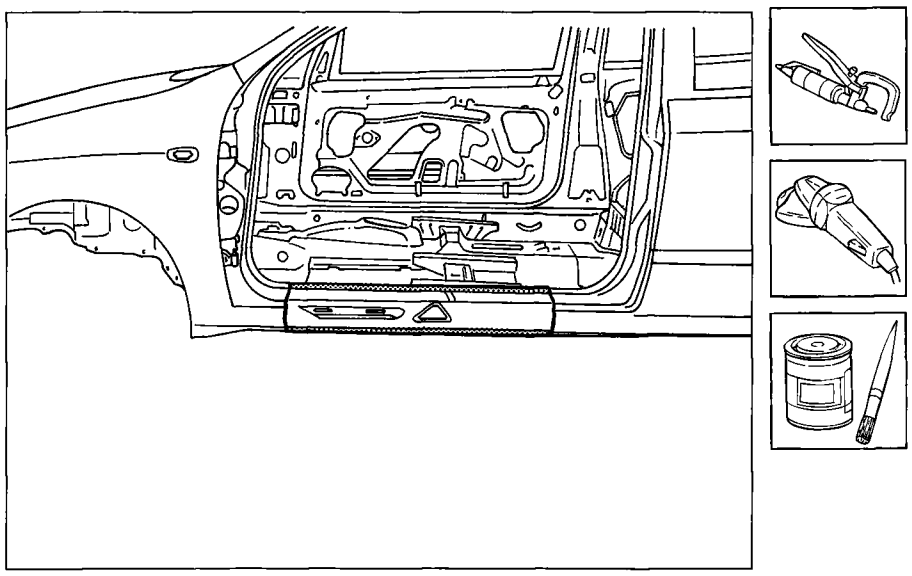

P4F60BM01

Adjusting the external side member

1. Position the replacement part on the vehicle, check that it is perfectly superimposed and mark it.
2. Remove the excess part from the vehicle.

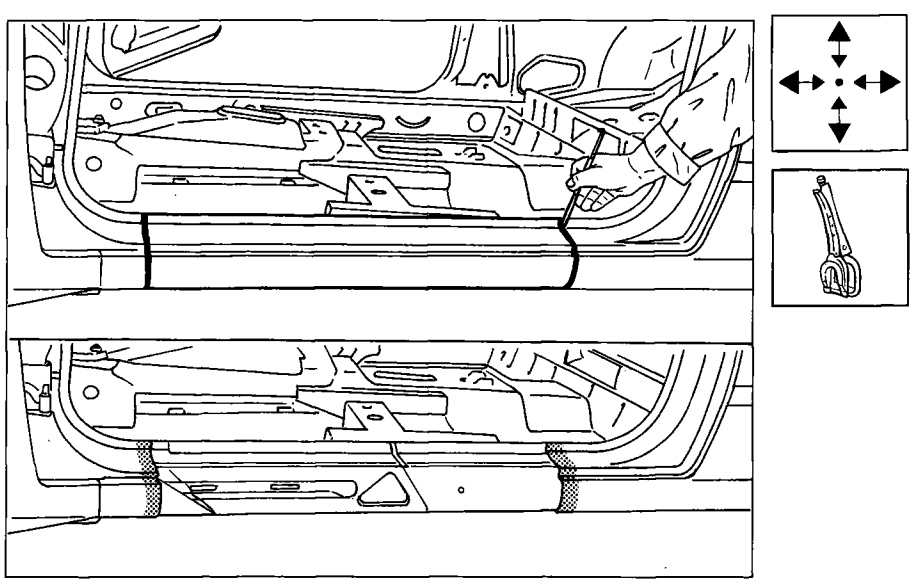

P4F60BM02

Preparing the external side member and positioning it on the bodyshell

1. Make equidistant holes along the entire lower edge of the replacement part.
2. Grind the internal and external edges.
3. Apply an electro-weldable anti-rust protective to the internal edges to be welded.
4. Reposition the replacement part on the vehicle and check that it is perfectly aligned with the adjacent elements.

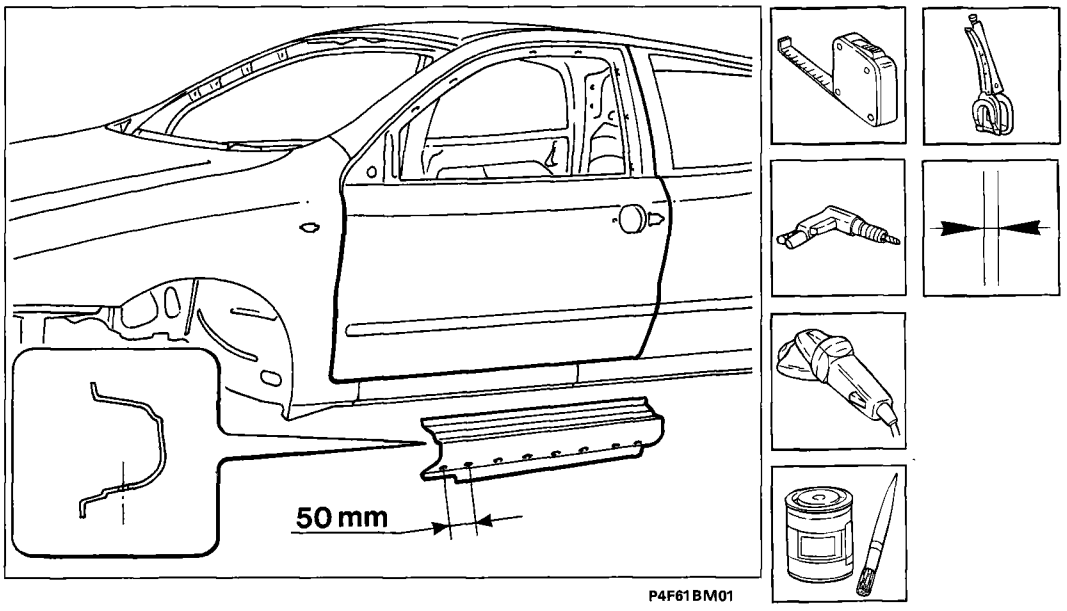

P4F61BM01

Welding the external side member

1. Tack the corners of the under door with the MIG welder.
2. Carry out spot welding on the upper and lower edges of the underdoor side member on the bodyshell.
3. Use the MIG welder to fill the holes made previously in the replacement part and weld it at the sides using chain welding in order not to distort the panels.

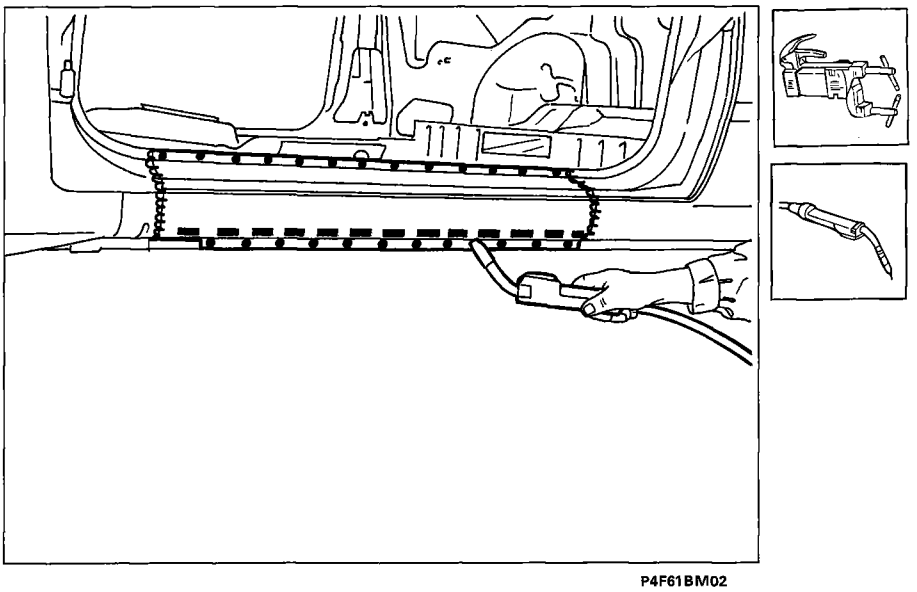

P4F61BM02

Finishing operations

Smooth the welds made using the MIG welder.

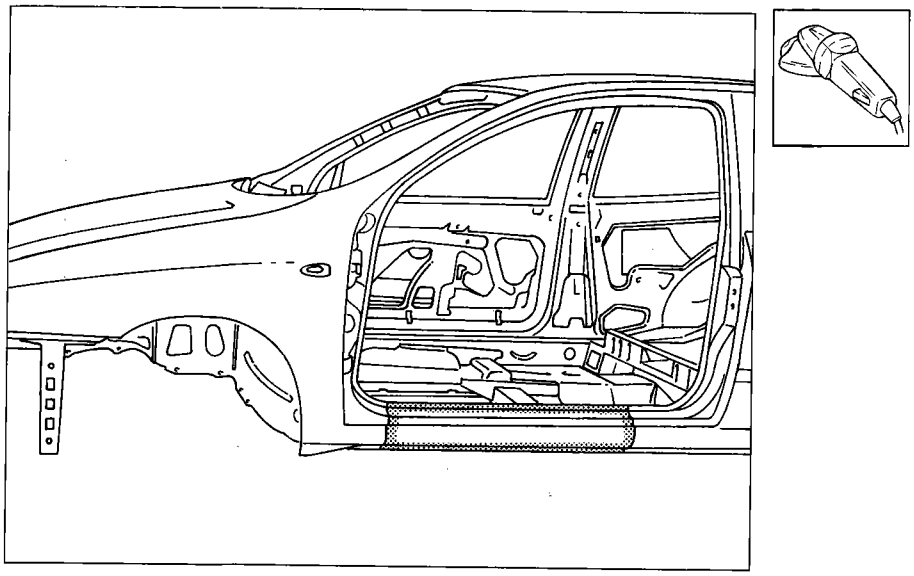

P4F62BM01

Protections

Refer to the previous description on pages 34-36.

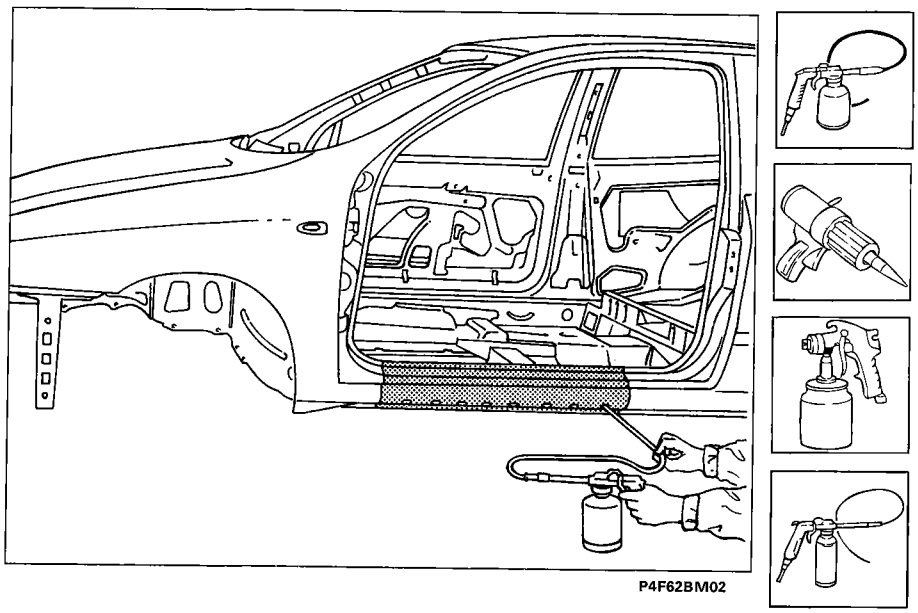

P4F62BM02

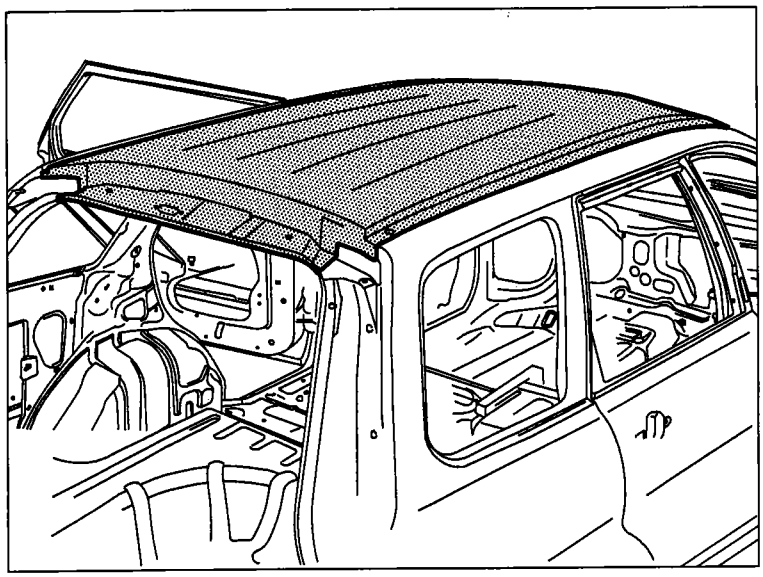

P4F63BM01

ROOF (7090A 58)*

Replacing

(*) This number indicates the operation code given in the Flat rate manual.

The component for which the replacement procedure is given is highlighed in the diagram at the side.

Preliminary procedures and accident prevention instructions

Refer to the description on page 33.

Preliminary dismantling

Remove the moving parts of the bodywork and interior fittings, which could impede the repair operations or be damaged during them.

Removing

Cut the component to be replaced and remove it from the vehicle.

The most important sections of the body panel are shown in order to allow the operator to adjust the position and the depth of the cutting so as not to damage the panels underneath.

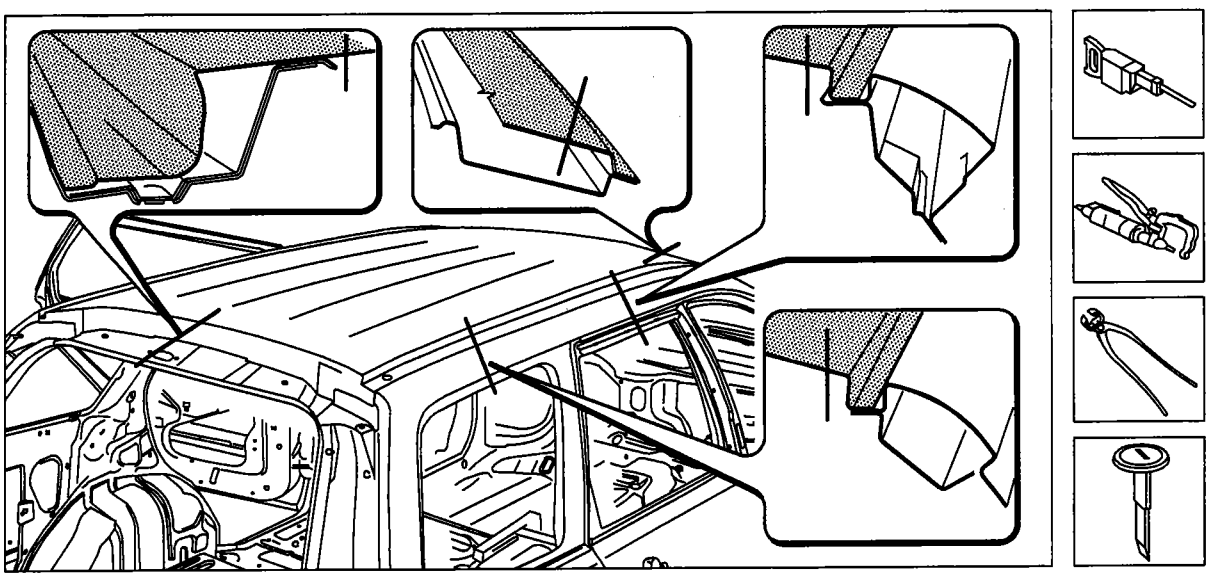

P4F63BM02

Preparing the edges of the bodyshell

1. Straighten any distortions to the bodyshell and prepare it as described on page 34.
2. Remove the centre rib undoing the fixing bolts.

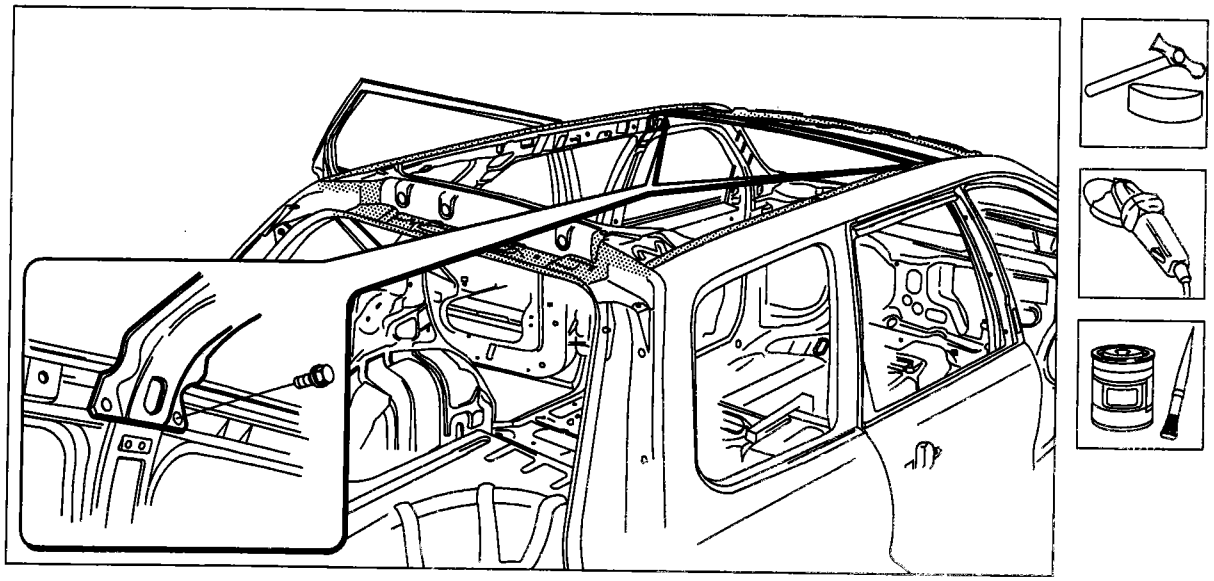

P4F64BM01

Preparing the spare part

1. Grind the internal and external edges.
2. Apply an electro-weldable anti-rust protective to the internal edges to be welded.

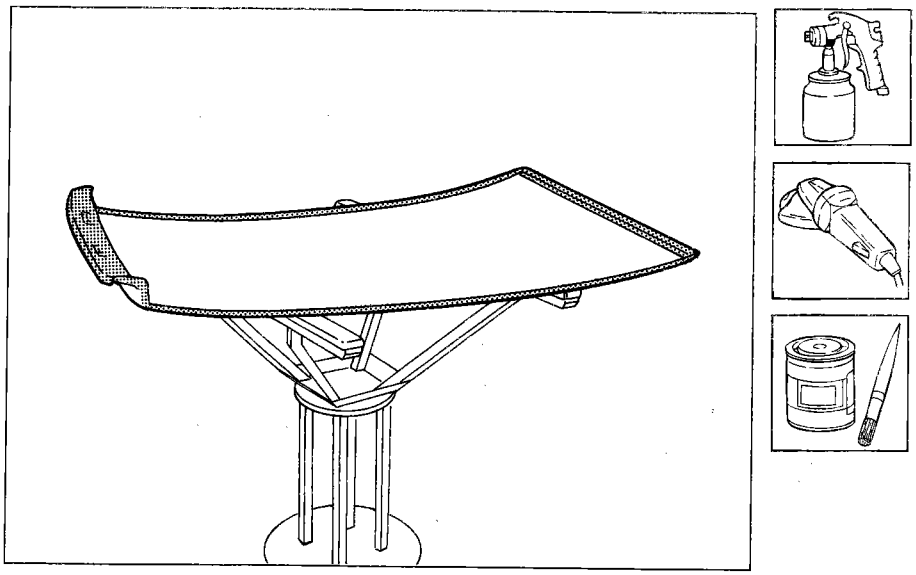

P4F64BM02

Positioning the replacement part

1. Renew the sealant on the vehicle ribs.
2. Position the replacement part on the vehicle and check that it is perfectly aligned with the adjacent elements.

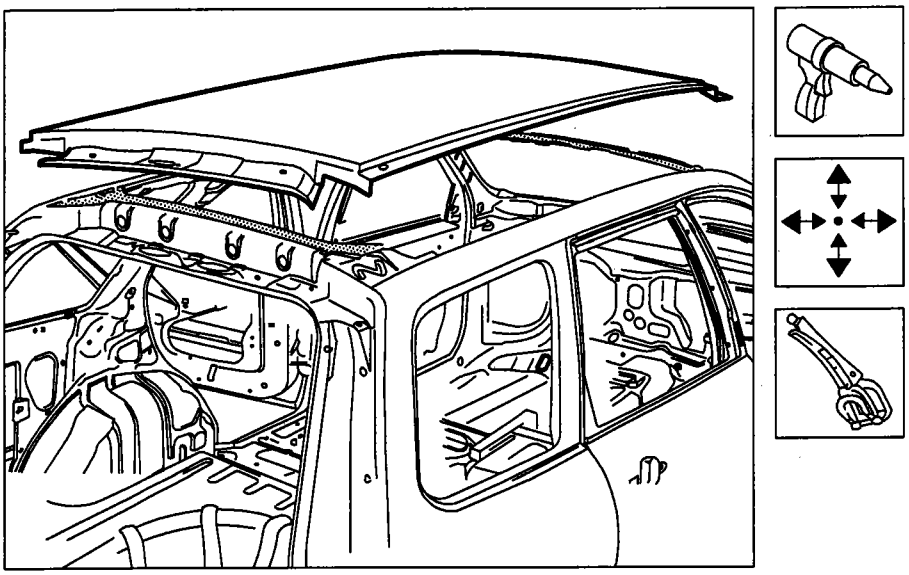

P4F65BM01

Welding the spare part

1. Carry out electrical spot welding along the entire perimeter of the roof.
2. Carry out brazing by the corners of the front and rear roof pillars.

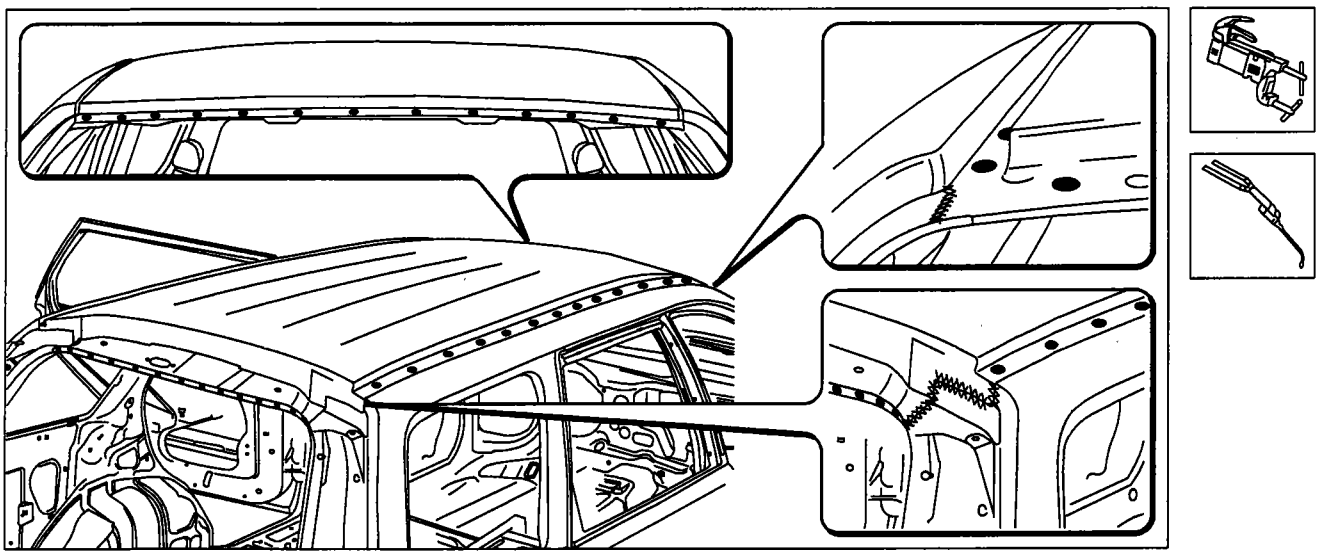

P4F65BM02

70.

Finishing operations

1. Smooth the brazing carried out at the corners of the roof.
2. Renew the sealant on the rib removed previously, then refit it on the bodyshell making sure that it adheres perfectly to the roof.

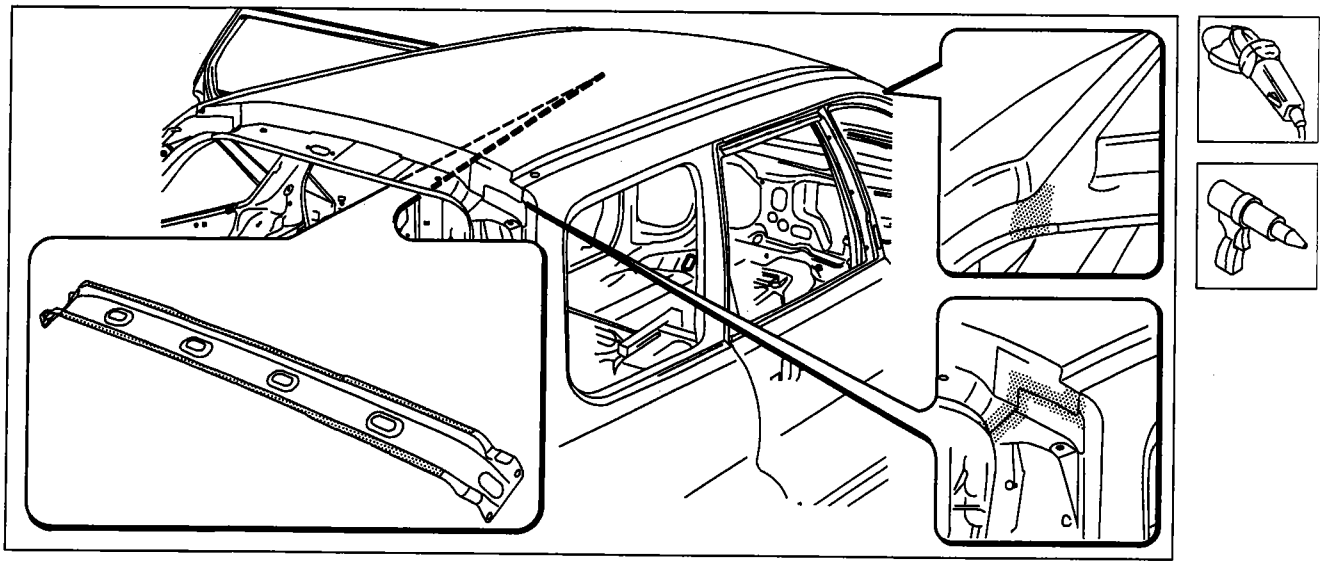

P4F66BM01

Protections

Refer to the previous description on pages 34-36.

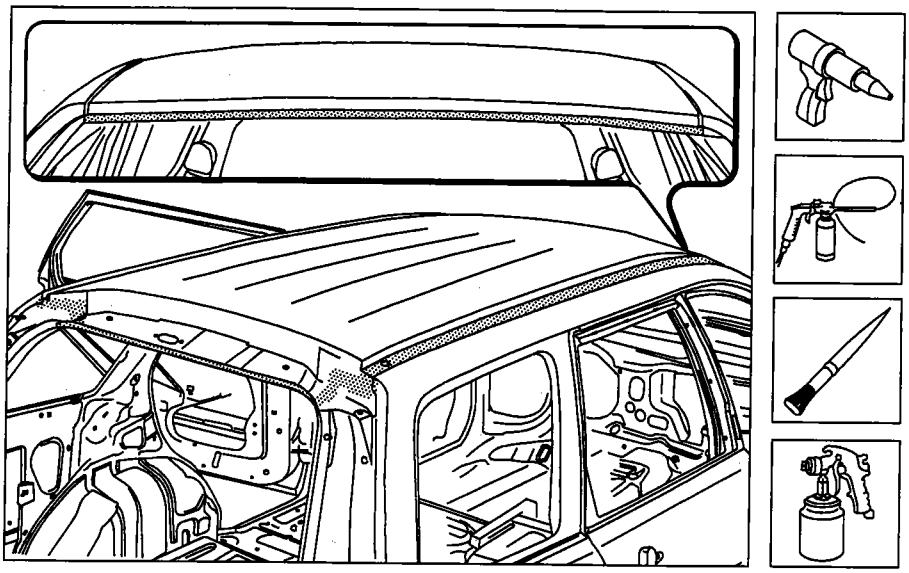

P4F66BM02

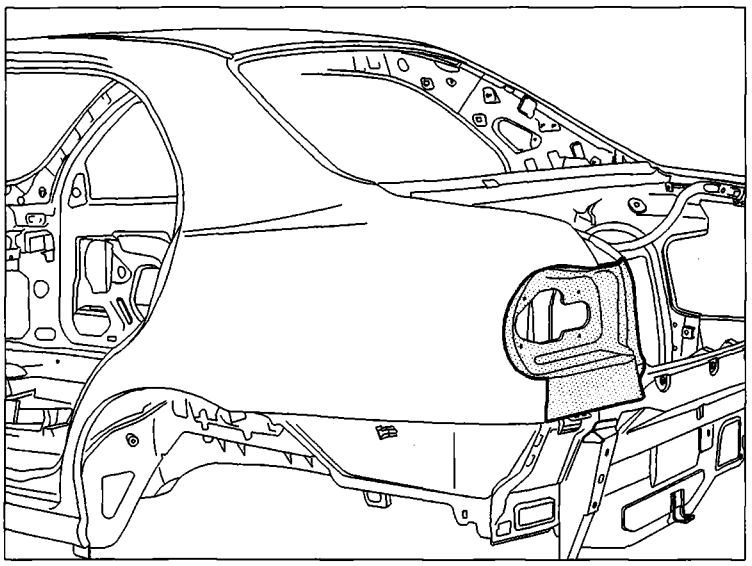

P4F67BM01

REAR LIGHT CLUSTER HOUSING (7090G 86)*

Replacing

(*) This number indicates the operation code given in the Flat rate manual.

The component for which the replacement procedure is given is highlighted in the diagram at the side.

Preliminary procedures and accident prevention instructions

Refer to the description on page 33.

Preliminary dismantling

Remove the moving parts of the bodywork and interior fittings, which could impede the repair operations or be damaged during them.

Removing

Cut the component to be replaced and remove it from the vehicle.

The most important sections of the body panel are shown in order to allow the operator to adjust the position and the depth of the cutting so as not to damage the panels underneath.

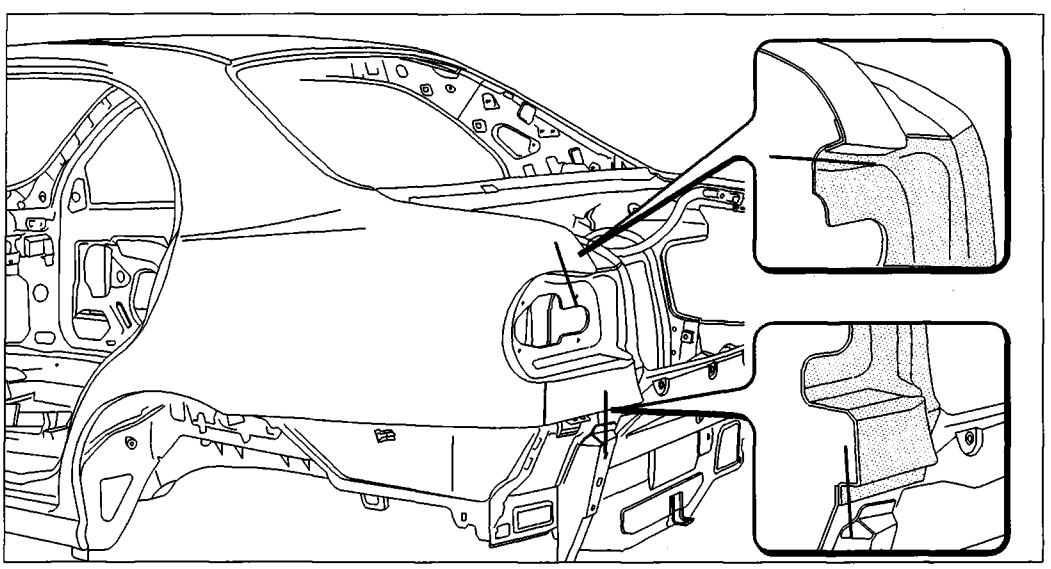

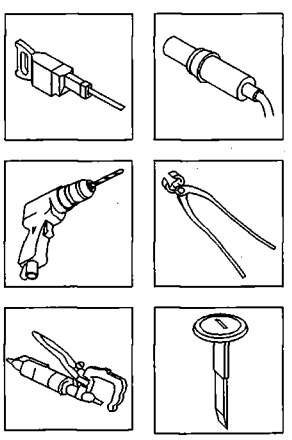

P4F67BM02

Preparing the edges of the bodyshell

1. Straighten any distortions to the bodyshell and prepare it as described on page 34.
2. Make equidistant holes in the edge of the rear wing as shown in the diagram.
3. Apply an electro-weldable anti-rust protective to the edges to be welded.

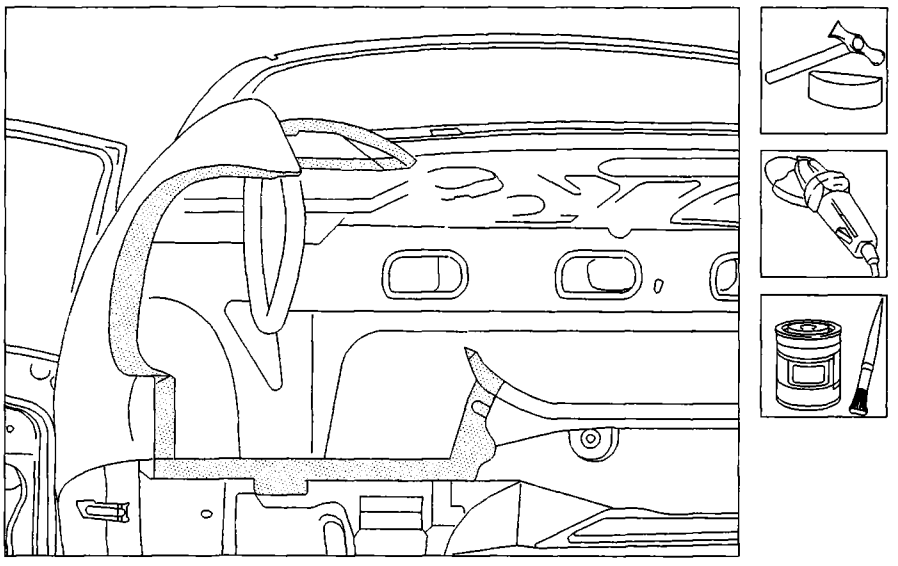

P4F68BM01

Preparing the spare part

1. Make equidistant holes in the edges of the part as shown in the diagram.
2. Grind the internal and external edges.
3. Apply an electro-weldable anti-rust protective to the internal edges to be welded.

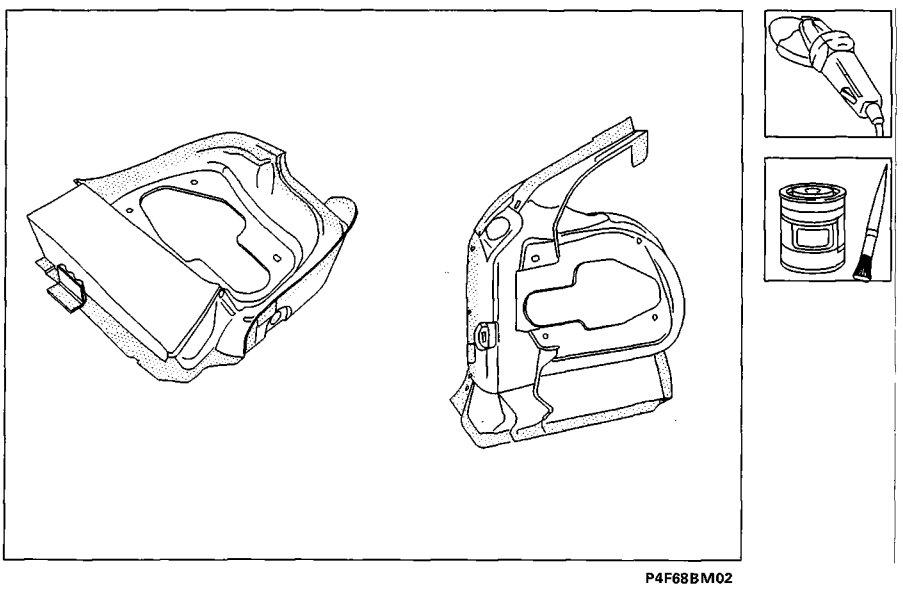

P4F68BM02

Positioning the replacement part

Position the replacement part on the vehicle and check that it is perfectly aligned with the adjacent elements.

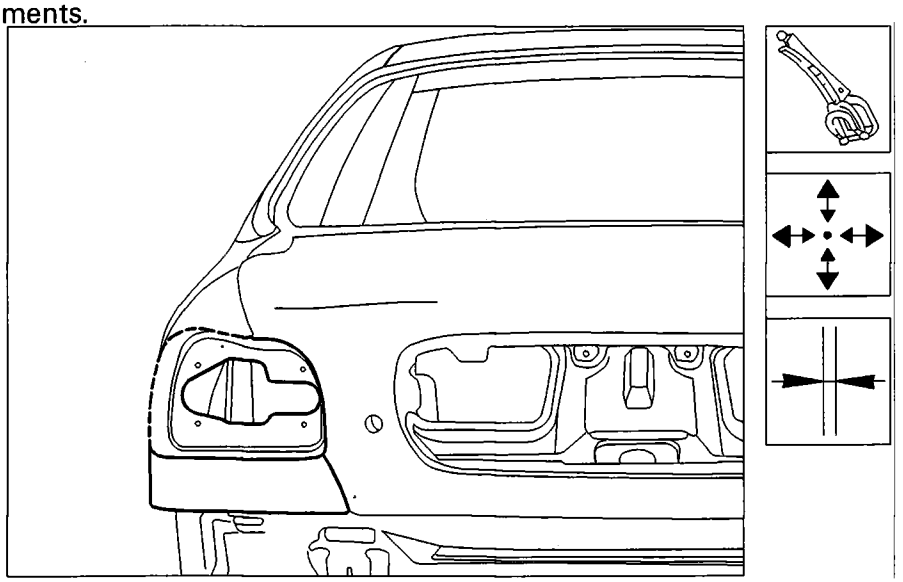

P4F69BM01

Welding the spare part

1. Carry out electrical spot welding as shown in the diagram.
2. Carry out MIG welding to fill the holes made previously in the replacement part.

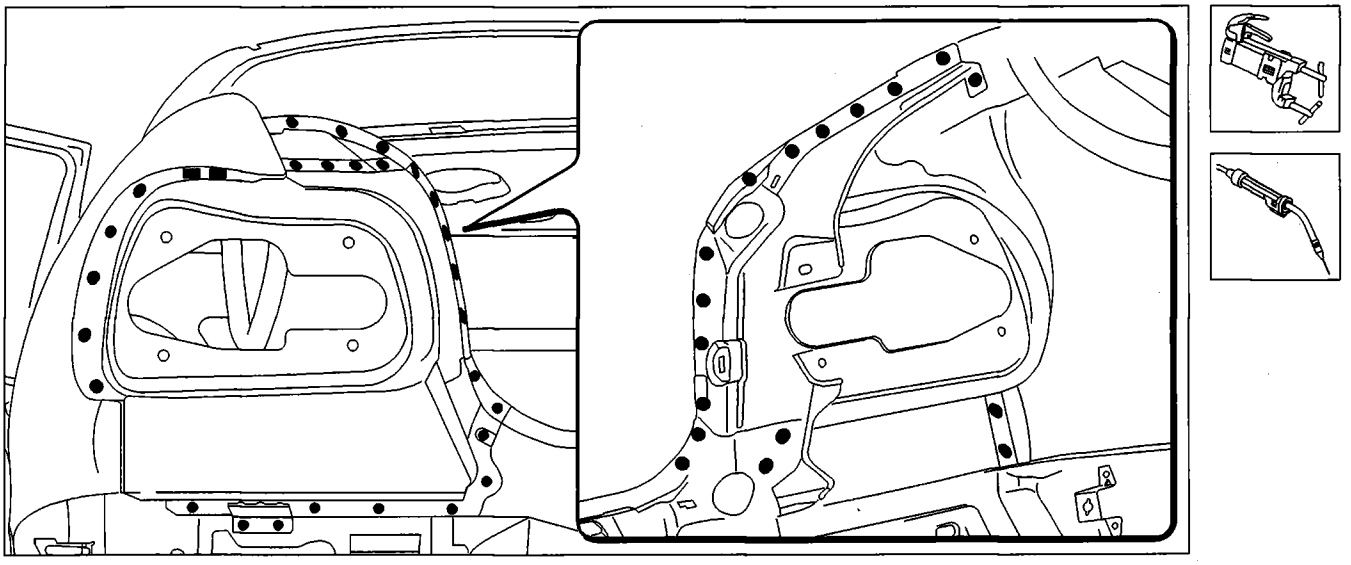

P4F69BM02

Finishing operations

Smooth the welds made with the MIG welder.

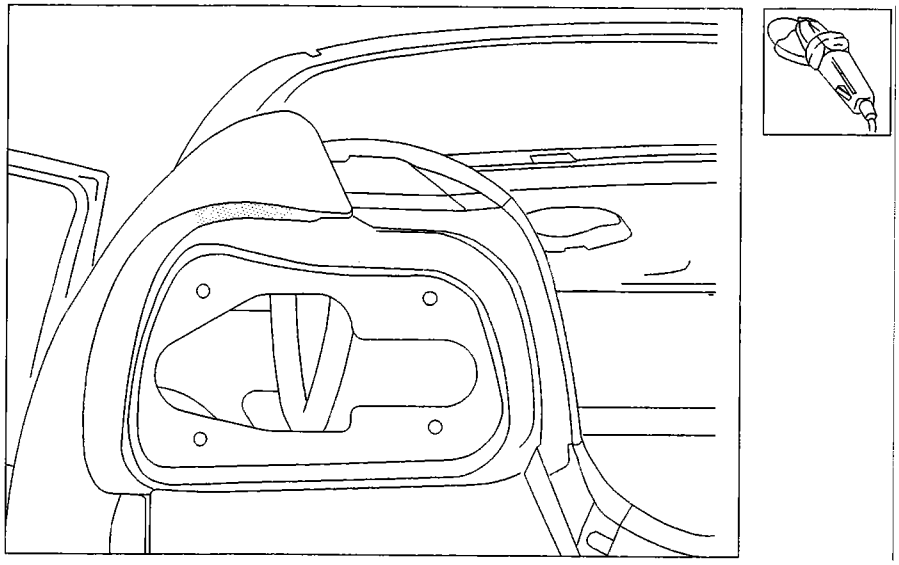

P4F70BM01

Protections

Refer to the previous description on pages 34-36.

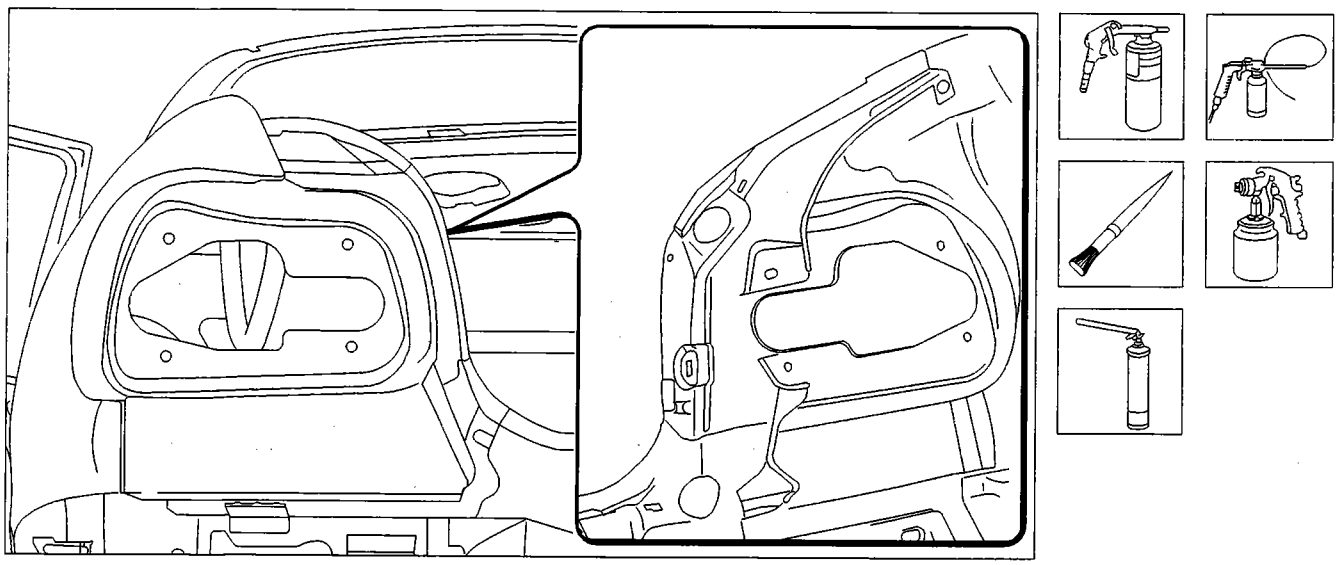

P4F70BM02

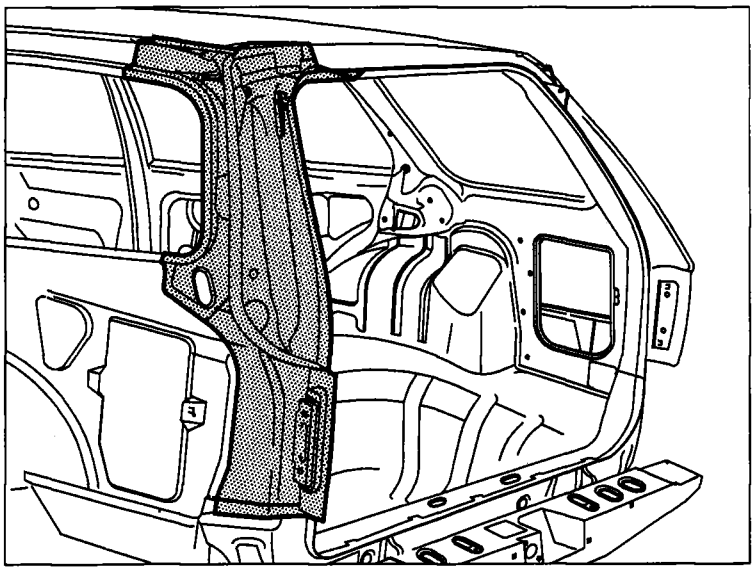

P4F71BM01

REAR LIGHT CLUSTER HOUSING (7090G 86)*

Replacing

(*) This number indicates the operation code given in the Flat rate manual.

The component for which the replacement procedure is given is highlighed in the diagram at the side.

Preliminary procedures and accident prevention instructions

Refer to the description on page 33.

Preliminary dismantling

Remove the moving parts of the bodywork and interior fittings, which could impede the repair operations or be damaged during them.

Removing

Cut the component to be replaced and remove it from the vehicle.

The most important sections of the body panel are shown in order to allow the operator to adjust the position and the depth of the cutting so as not to damage the panels underneath.

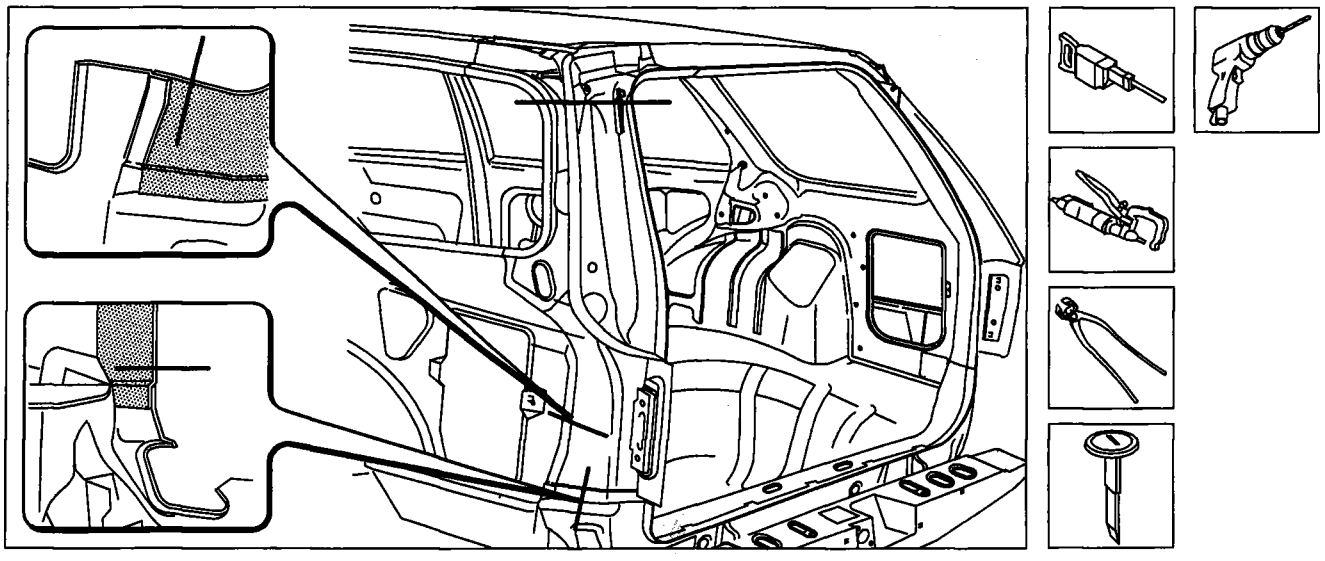

P4F71BM02

Preparing the edges of the bodyshell

1. Straighten any distortions to the bodyshell and prepare it as described on page 34.
2. Make equidistant holes in the edge of the rear wing as shown in the diagram.
3. Apply an electro-weldable anti-rust protective to the edges to be welded.

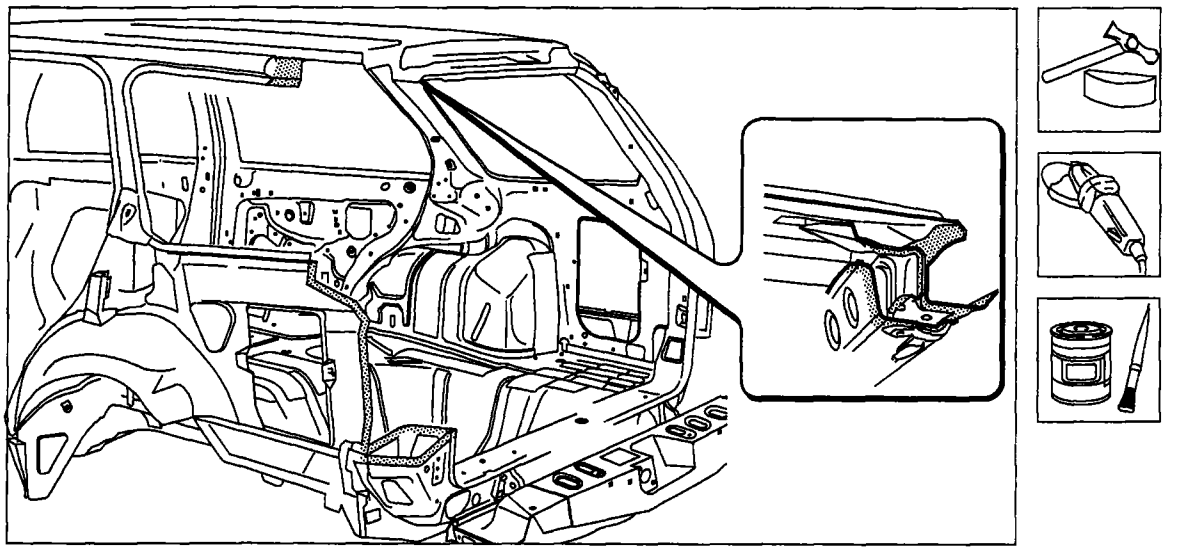

P4F72BM01

Preparing the spare part

1. Make equidistant holes in the edges of the replacement part as shown in the diagram.
2. Grind the internal and external edges.
3. Apply an electro-weldable anti-rust protective to the internal edges to be welded.

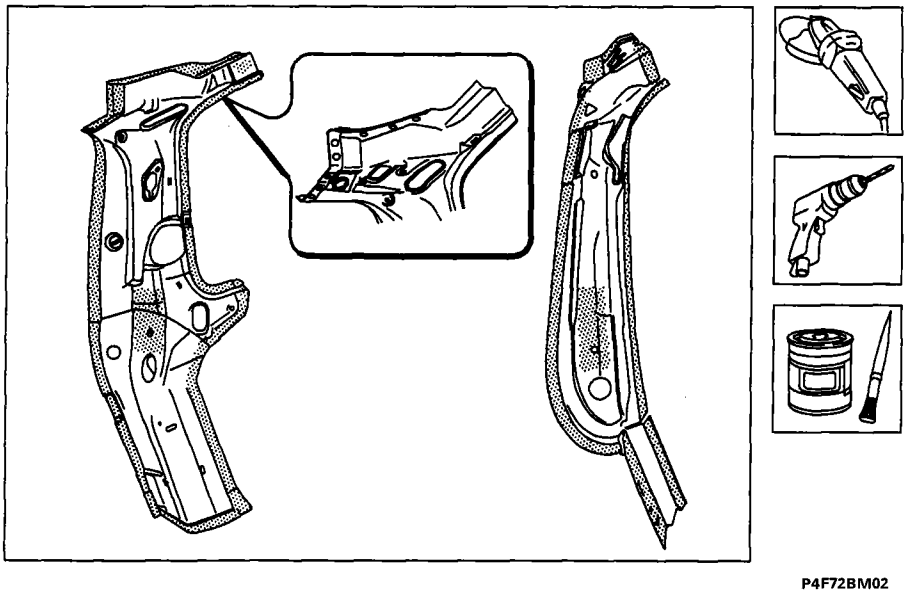

P4F72BM02

Positioning the replacement part

Position the replacement part on the vehicle and check that it is perfectly aligned with the adjacent elements.

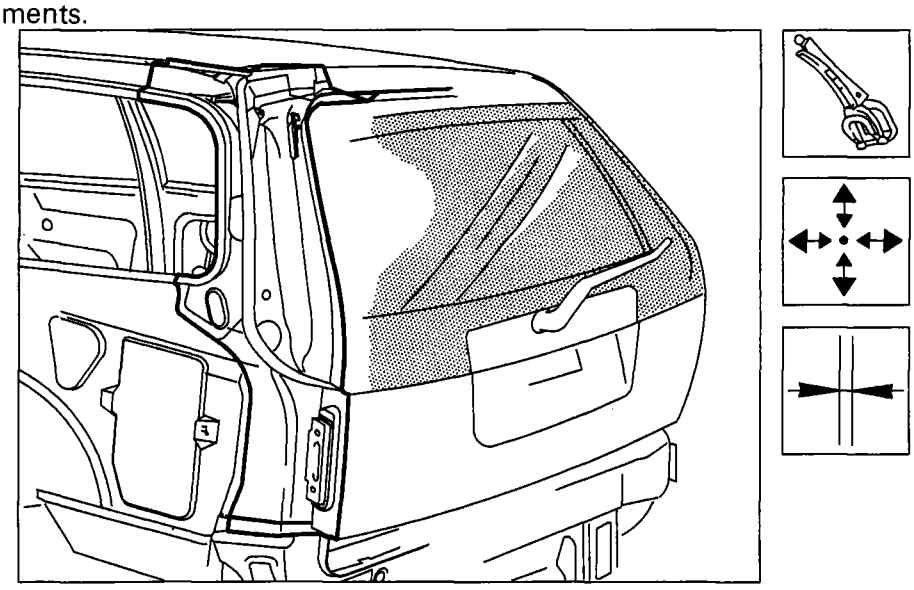

P4F73BM01

Welding the spare part

1. Carry out electrical spot welding as shown in the diagram.
2. Carry out MIG welding to fill the holes made previously in the replacement part.
3. Carry out the brazing of the pillar with the roof.

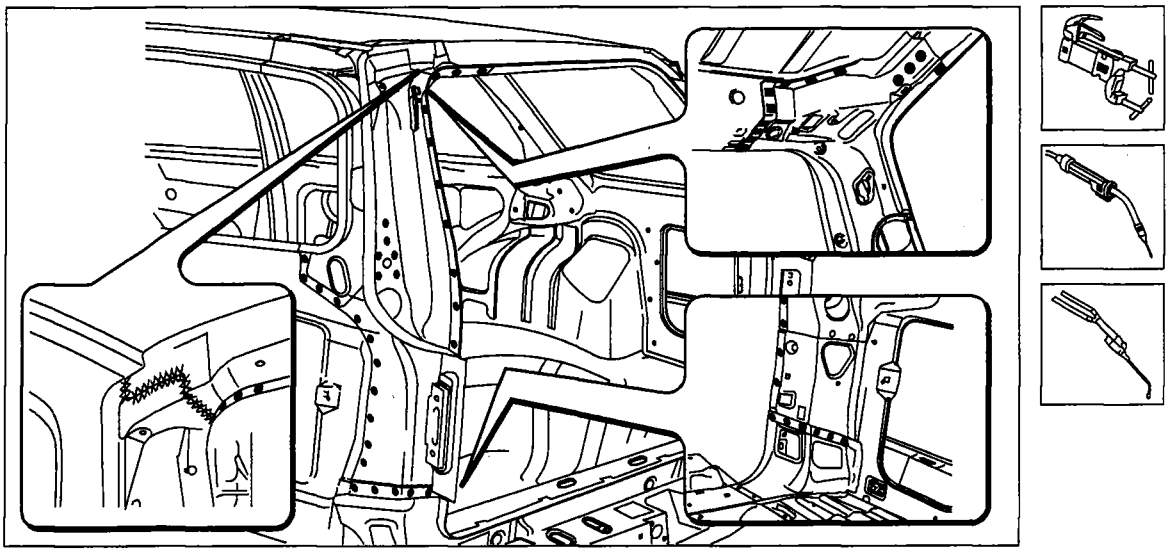

P4F73BM02

Copyright by Fiat Auto

Finishing operations

Smooth the welds made using the MIG welder.

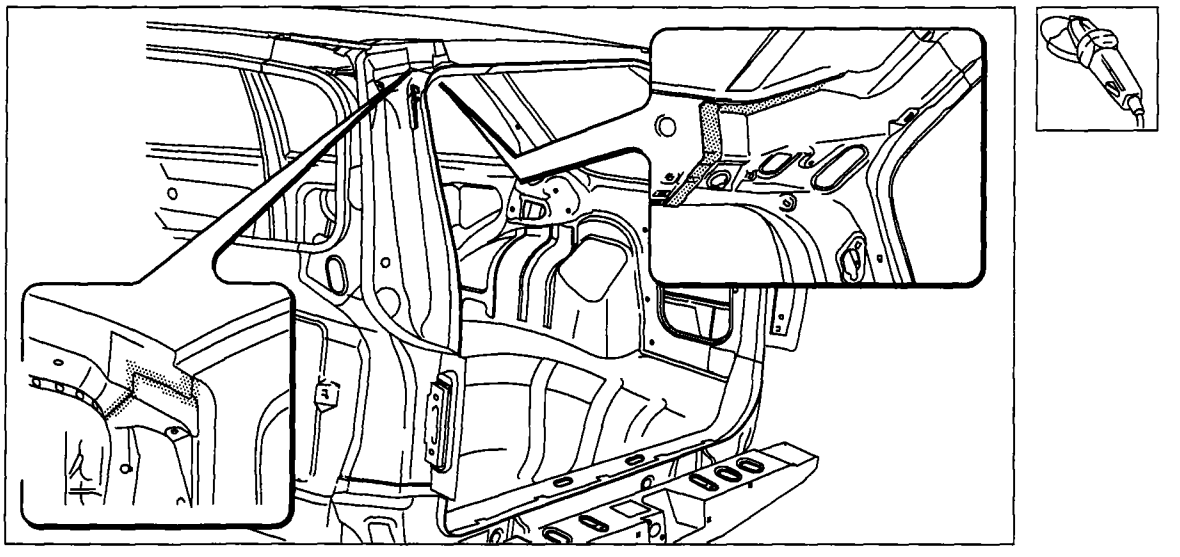

P4F74BM01

Proceed with fitting the rear wing.

Protections

Refer to the previous description on pages 34-36.

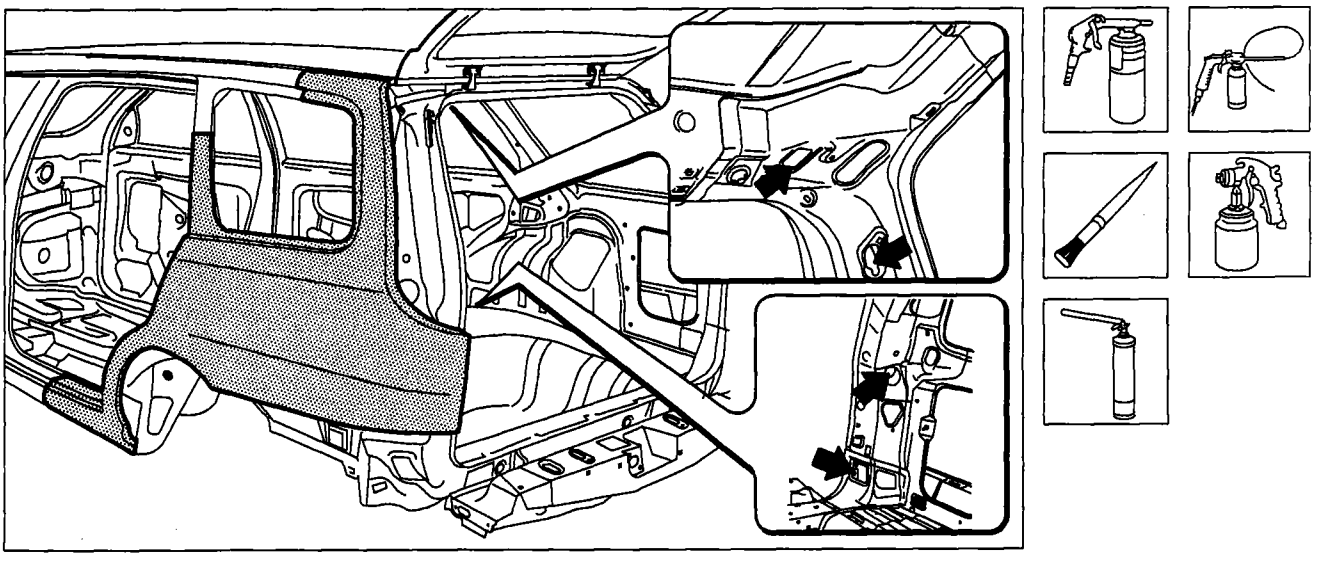

P4F74BM02

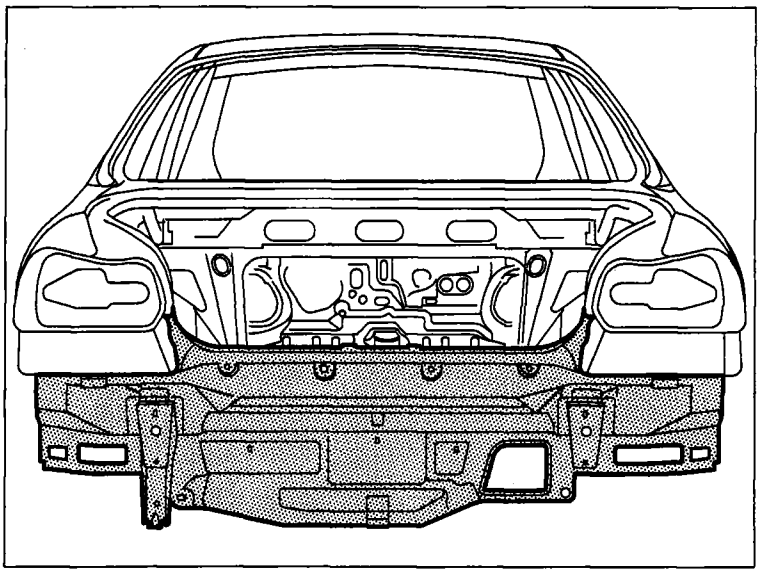

P4F75BM01

REAR CROSS MEMBER LINING (7090A 46)*

Replacing

(*) This number indicates the operation code given in the Flat rate manual.

The component for which the replacement procedure is given is highlighed in the diagram at the side.

Preliminary procedures and accident prevention instructions

Refer to the description on page 33.

Preliminary dismantling

Remove the moving parts of the bodywork and interior fittings, which could impede the repair operations or be damaged during them.

Removing

Cut the component to be replaced and remove it from the vehicle.

The most important sections of the body panel are shown in order to allow the operator to adjust the position and the depth of the cutting so as not to damage the panels underneath.

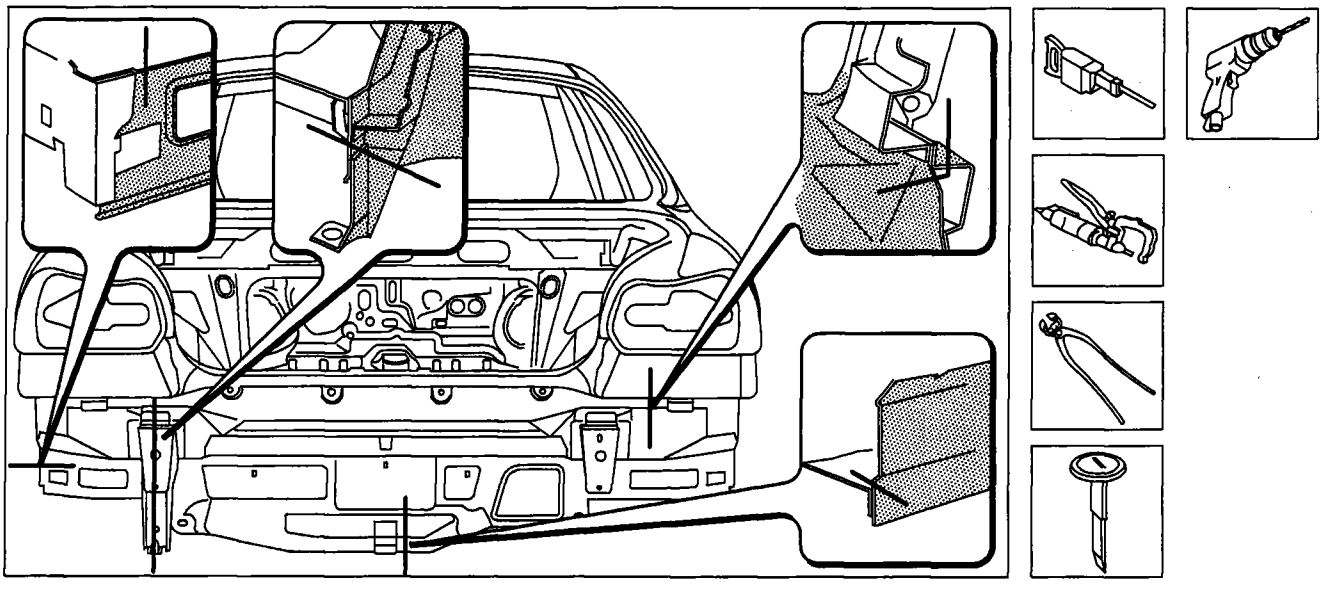

P4F75BM02

Preparing the edges of the bodyshell

1. Straighten any distortions to the bodyshell and prepare it as described on page 34.
2. Make equidistant holes in the edge of the rear wing as shown in the diagram.
3. Apply an electro-weldable anti-rust protective to the edges to be welded.

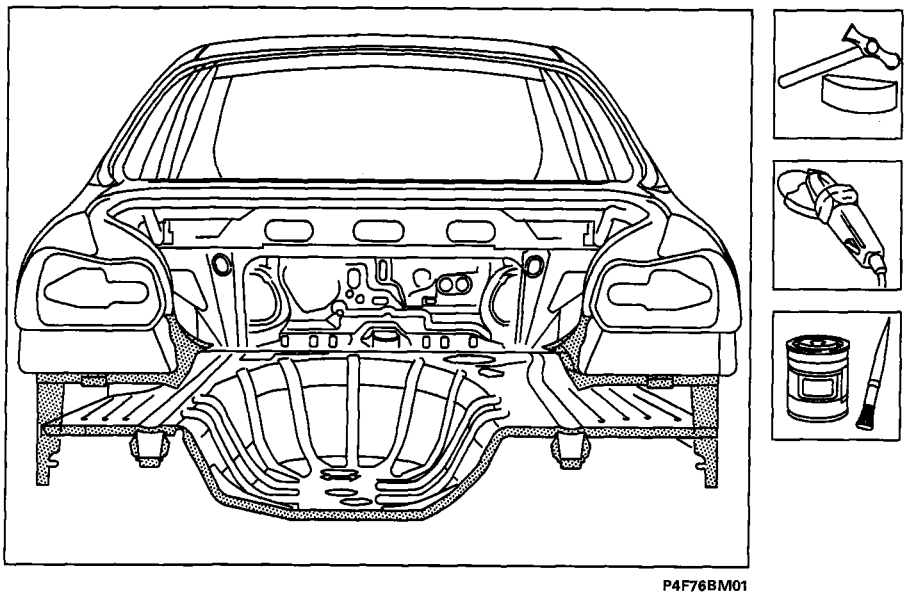

P4F76BM01

Preparing the spare part

1. Make equidistant holes in the edges of the replacement part as shown in the diagram.
2. Grind the internal and external edges.
3. Apply an electro-weldable anti-rust protective to the internal edges to be welded.

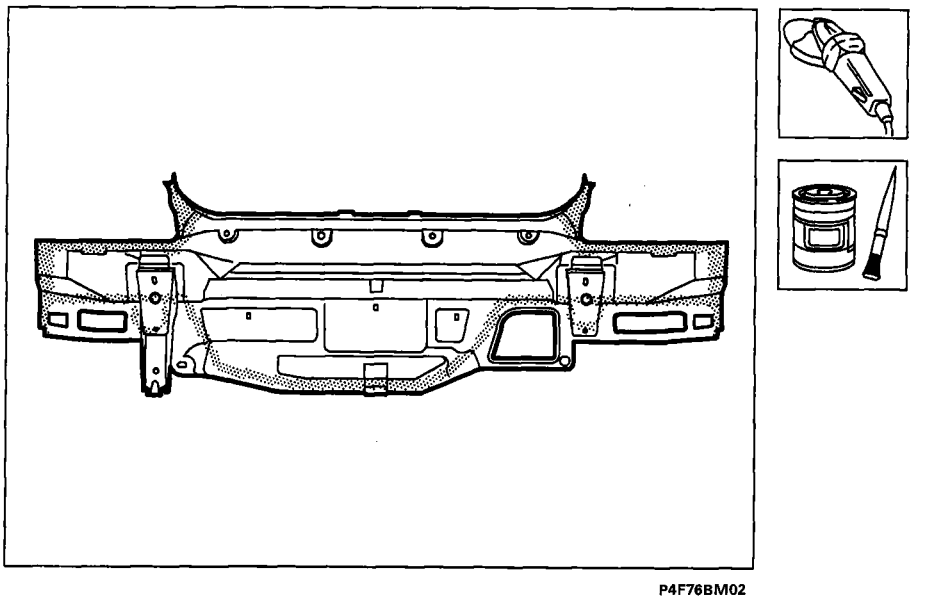

P4F76BM02

Positioning the replacement part

Position the replacement part on the vehicle and check that it is perfectly aligned with the adjacent elements.

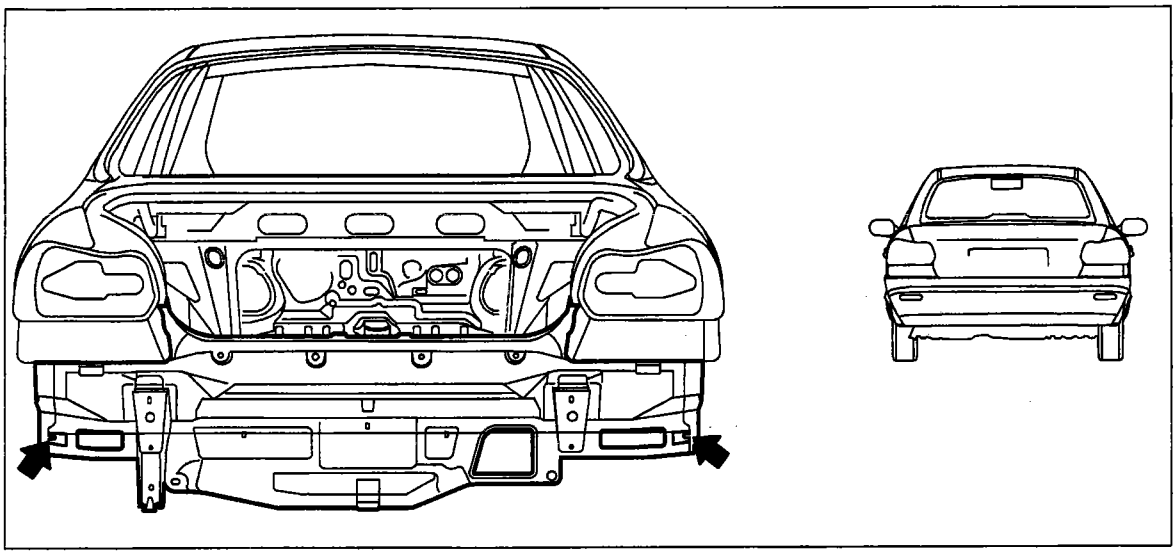

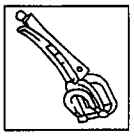

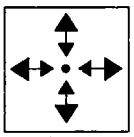

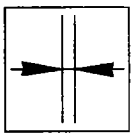

P4F77BM01

Welding the spare part

1. Carry out electrical spot welding as shown in the diagram.
2. Carry out MIG welding to fill the holes made previously in the replacement part.

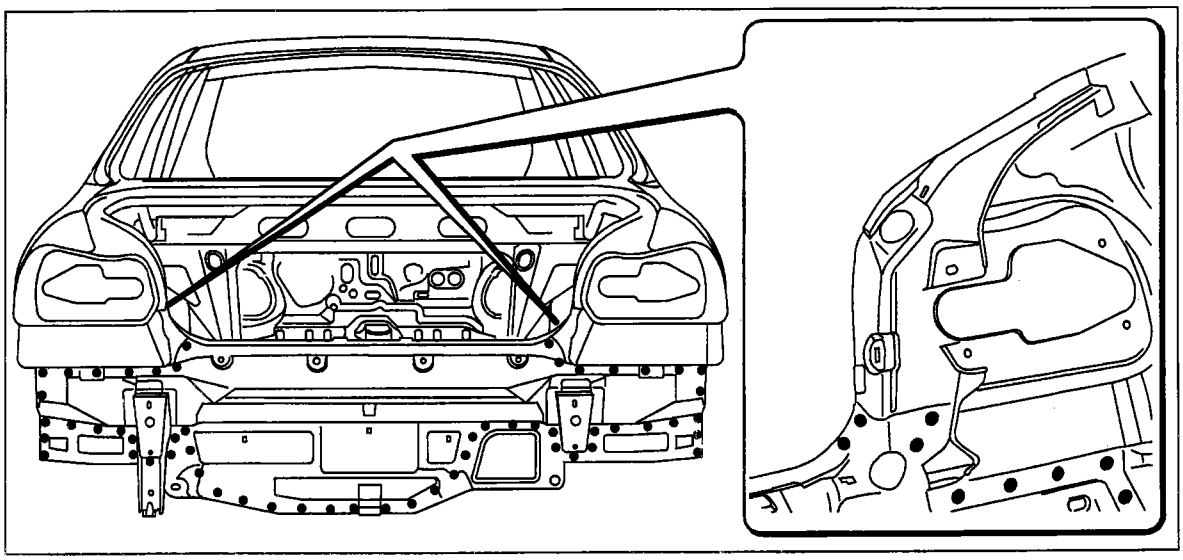

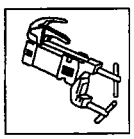

P4F77BM02

Finishing operations

Smooth the welds made using the MIG welder.

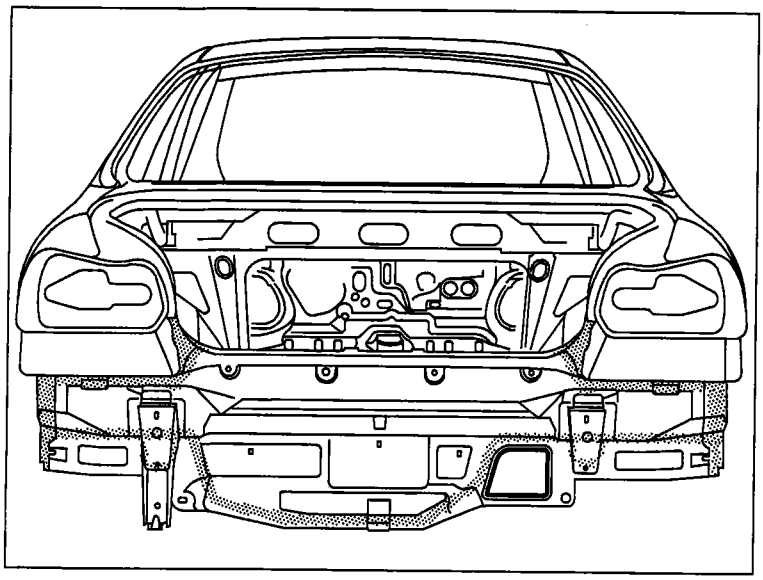

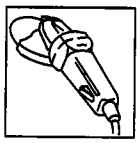

P4F78BM01

Protections

Refer to the previous description on pages 34-36.

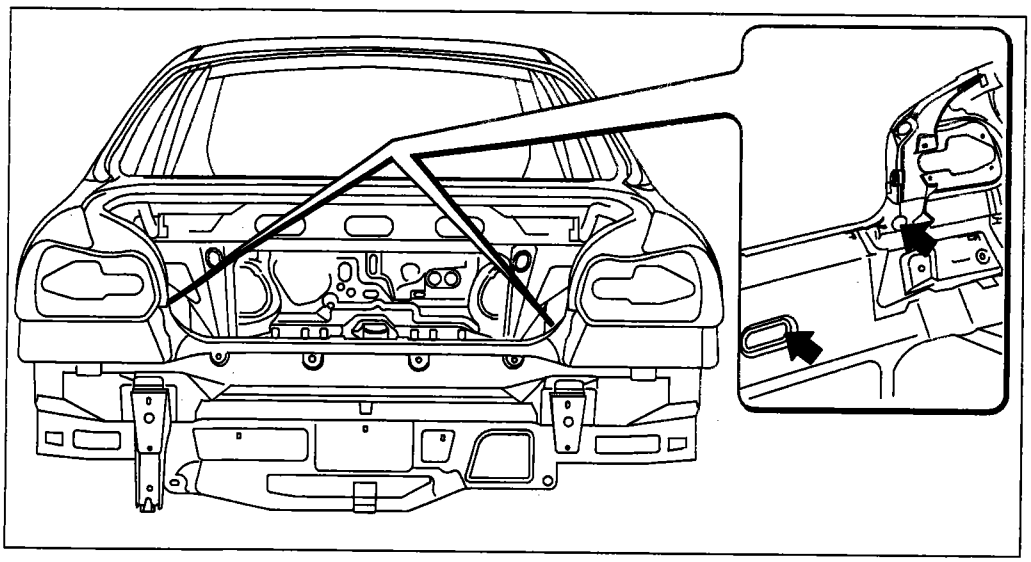

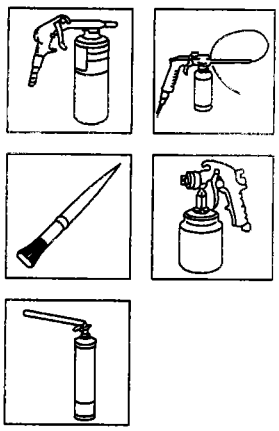

P4F78BM02

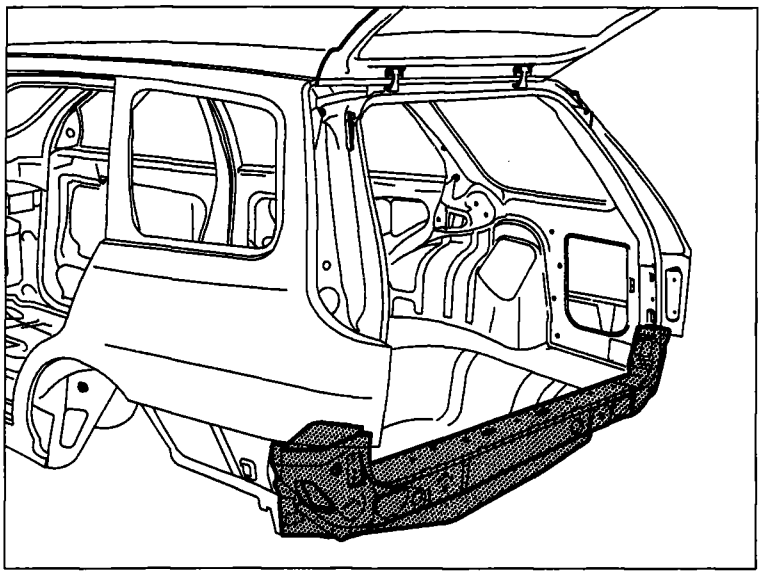

P4F79BM01

REAR CROSS MEMBER LINING (7090A 46)*

Replacing

(*) This number indicates the operation code given in the Flat rate manual.

The component for which the replacement procedure is given is highlighed in the diagram at the side.

Preliminary procedures and accident prevention instructions

Refer to the description on page 33.

Preliminary dismantling

Remove the moving parts of the bodywork and interior fittings, which could impede the repair operations or be damaged during them.

Removing

Cut the component to be replaced and remove it from the vehicle.

The most important sections of the body panel are shown in order to allow the operator to adjust the position and the depth of the cutting so as not to damage the panels underneath.

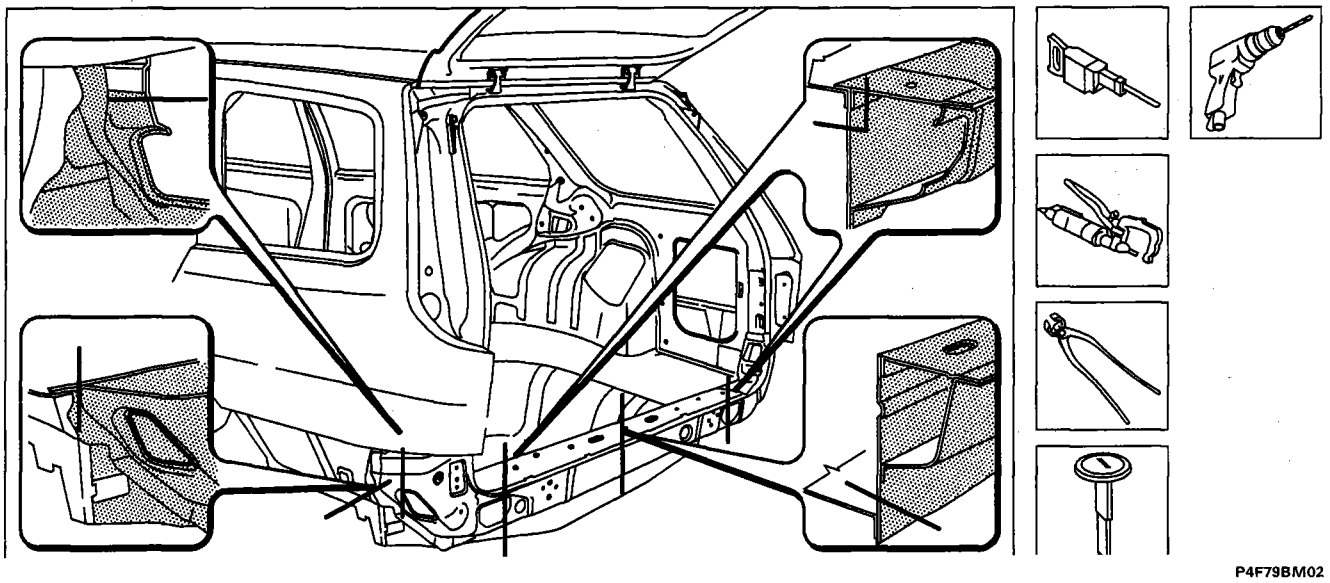

P4F79BM02

70.

Preparing the edges of the bodyshell

1. Straighten any distortions to the bodyshell and prepare it as described on page 34.
2. Make equidistant holes in the edge of the rear wing as shown in the diagram.
3. Apply an electro-weldable anti-rust protective to the edges to be welded.

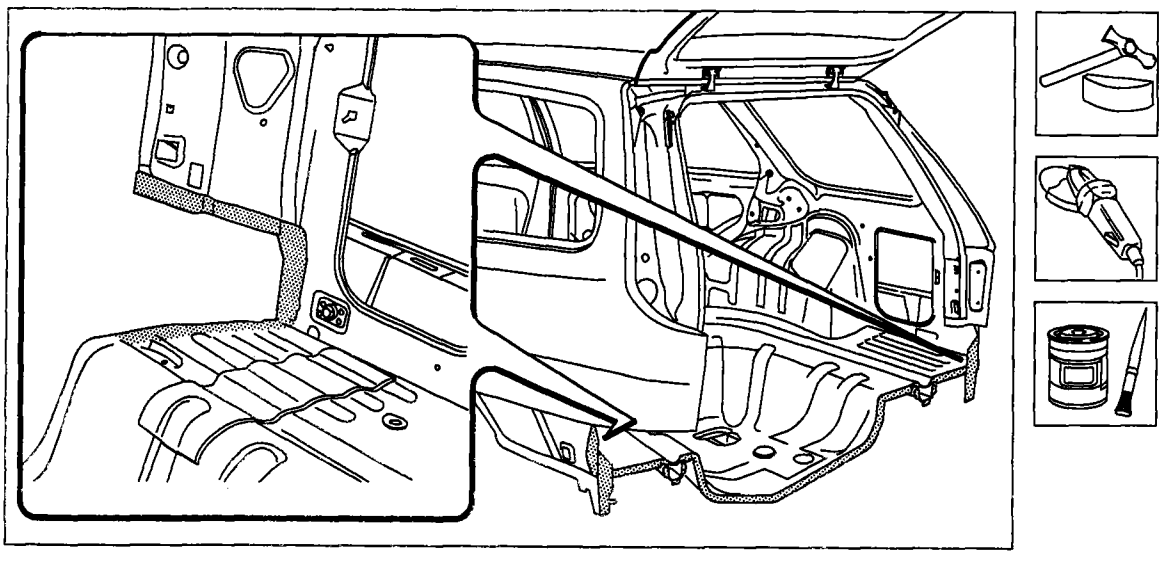

P4F80BM01

Preparing the spare part

1. Make equidistant holes in the edges of the replacement part as shown in the diagram.
2. Grind the internal and external edges.
3. Apply an electro-weldable anti-rust protective to the internal edges to be welded.

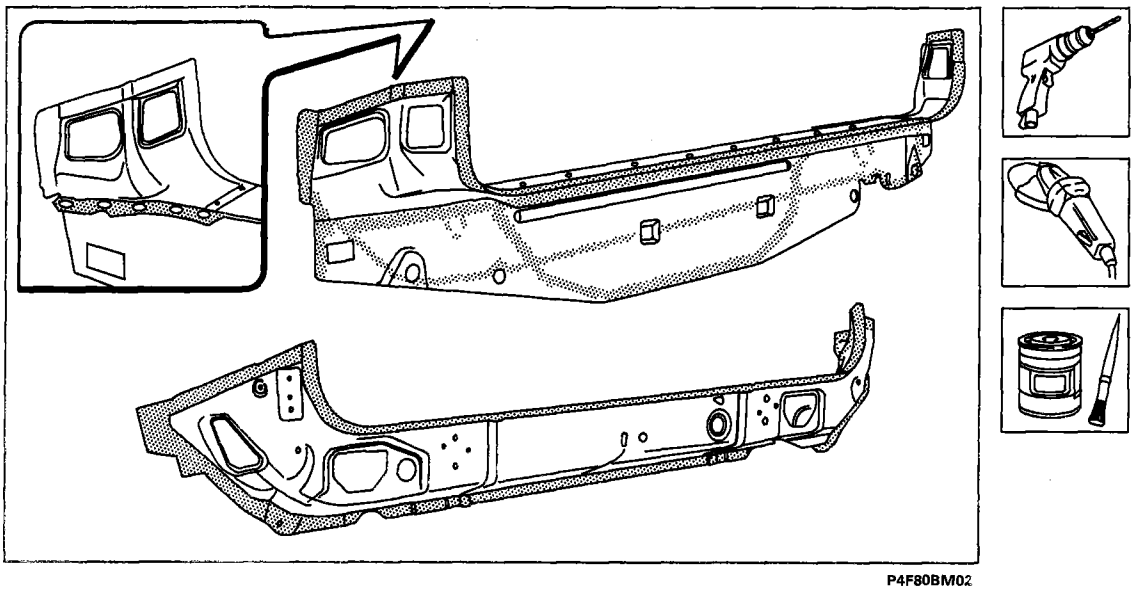

P4F80BM02

Positioning the replacement part

Position the replacement part on the vehicle and check that it is perfectly aligned with the adjacent elements.

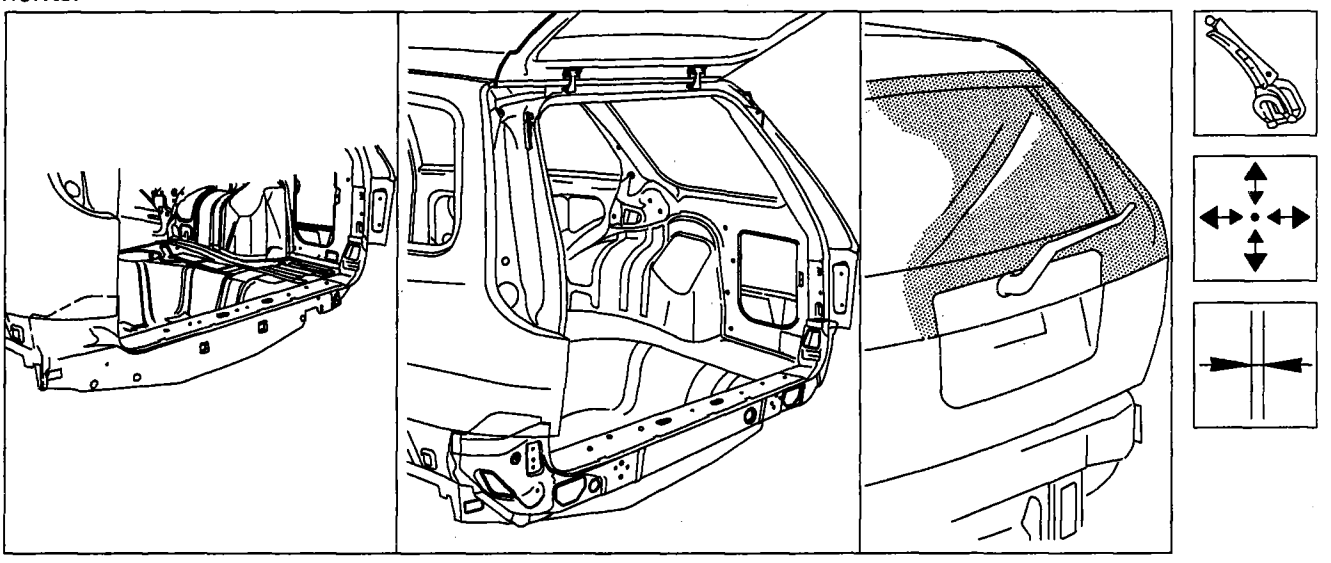

P4F81BM01

Welding the spare part

1. Carry out the electrical spot welding as shown in the diagram.
2. Carry out MIG welding to fill the holes made previously in the replacement part.

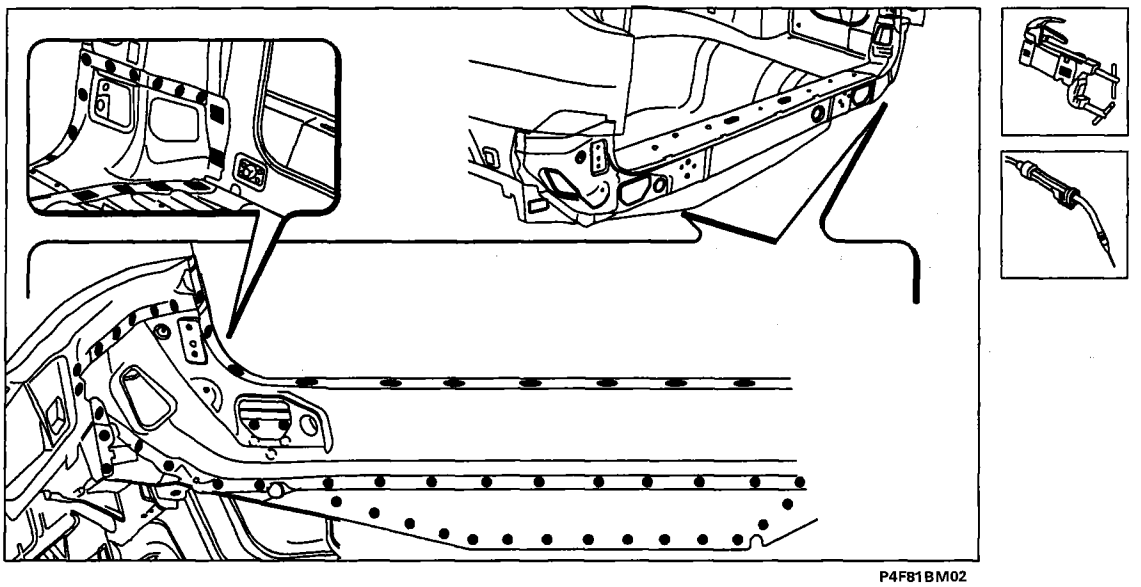

P4F81BM02

Finishing operations

Smooth the welds made using the MIG welder.

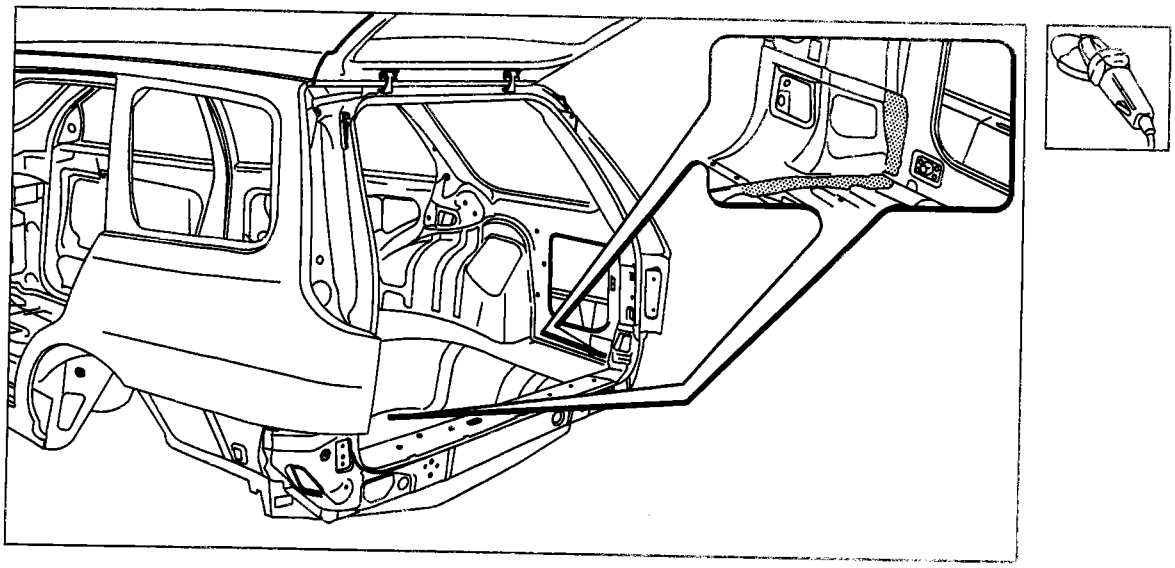

P4F82BM01

Protections

Refer to the previous description on pages 34-36.

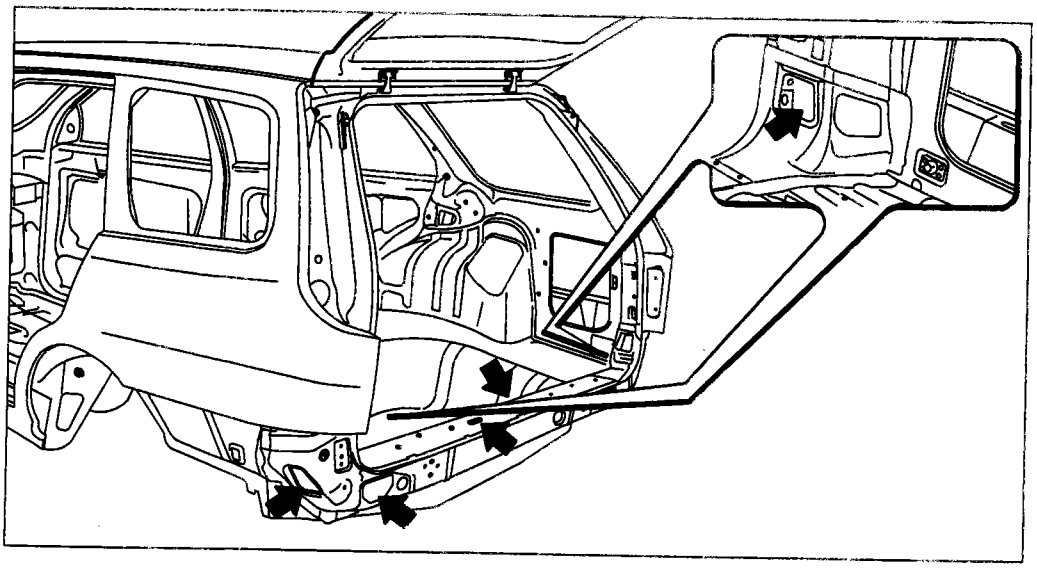

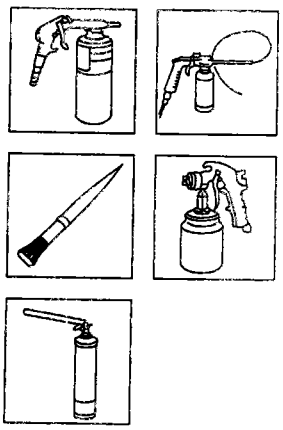

P4F82BM02

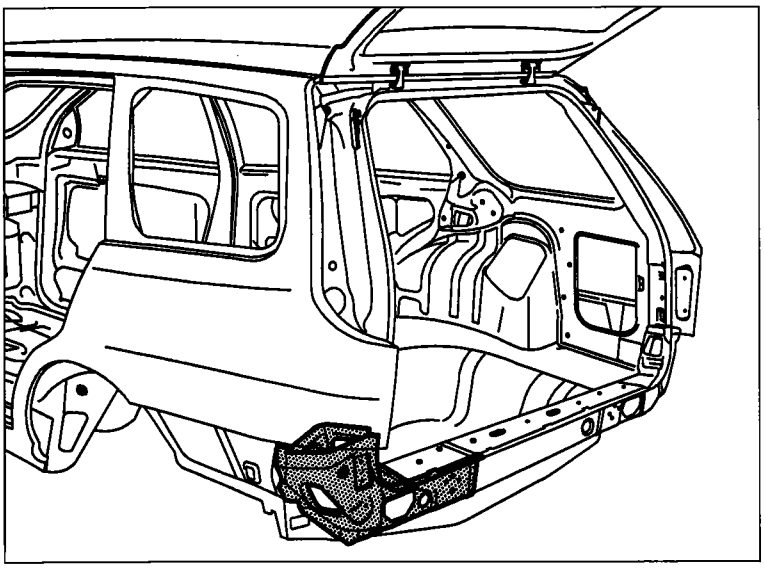

P4F15CM01

PARTIAL REAR CROSS MEMBER COVER (7090A 46)*

Replacing

(*) This number indicates the operation code given in the Flat rate manual.

The component for which the replacement procedure is given is highlighed in the diagram at the side.

Preliminary procedures and accident prevention instructions

Refer to the description on page 33.

Preliminary dismantling

Remove the moving parts of the bodywork and interior fittings, which could impede the repair operations or be damaged during them.

Removing

Cut the component to be replaced and remove it from the vehicle.

The most important sections of the body panel are shown in order to allow the operator to adjust the position and the depth of the cutting so as not to damage the panels underneath.

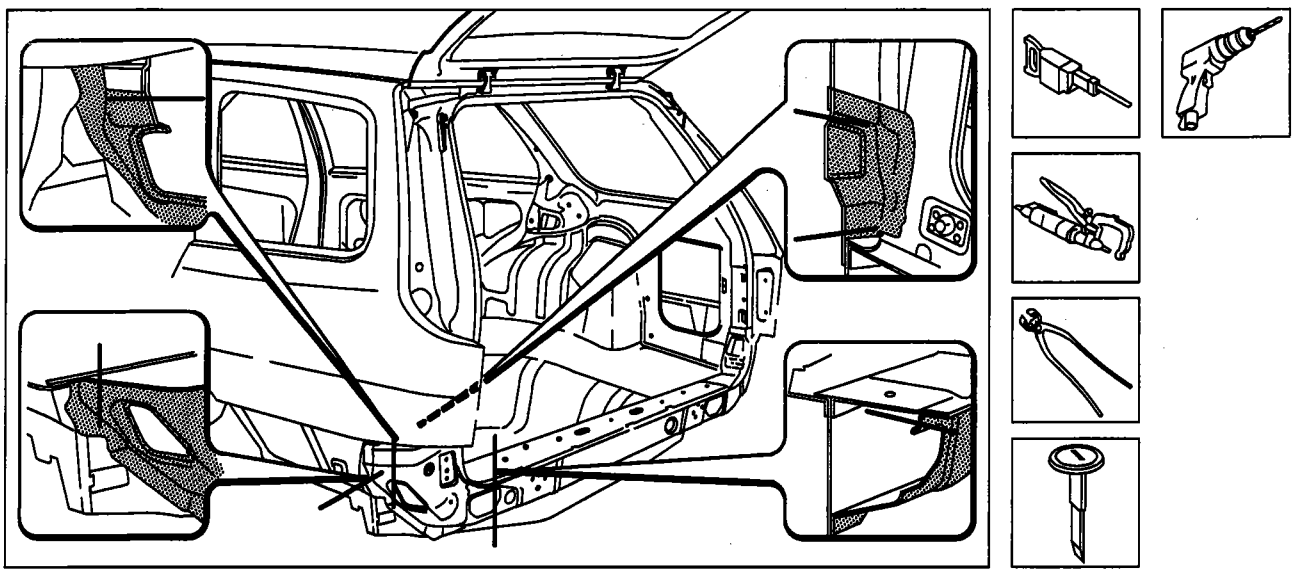

P4F15CM02

70.

Preparing the edges of the bodyshell

1. Straighten any distortions to the bodyshell and prepare it as described on page 34.
2. Grind the internal and external edges.
3. Apply an electro-weldable anti-rust protection to the edges to be welded.

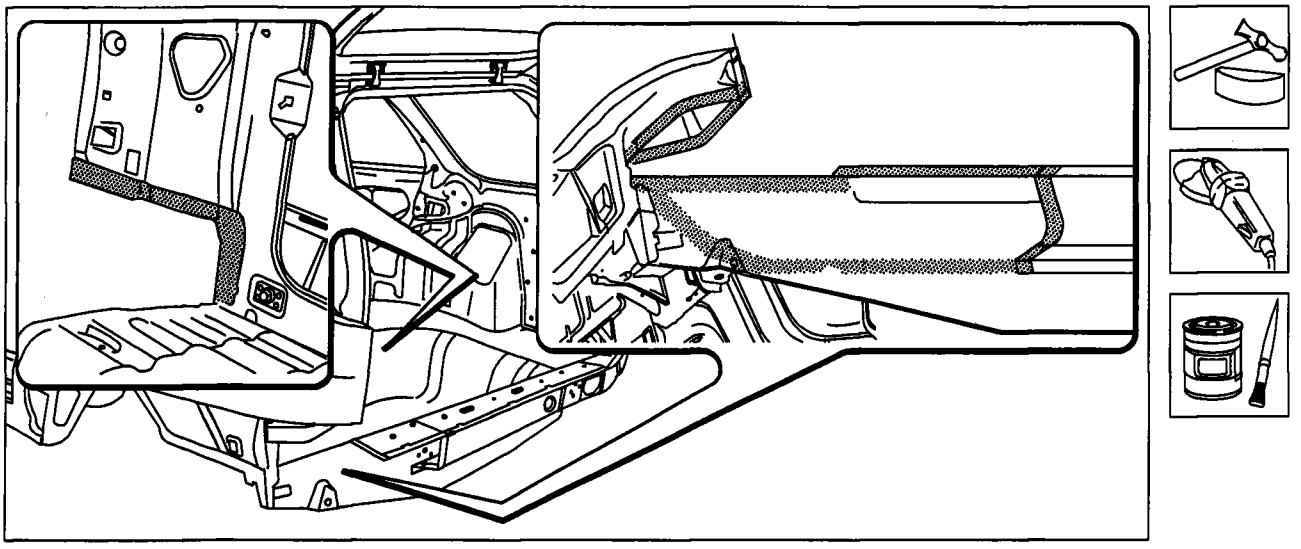

P4F16CM01

Preparing the spare part

1. Make equidistant holes in the edges of the replacement part as shown in the diagram.
2. Grind the internal and external edges.
3. Apply an electro-weldable anti-rust protection to the internal edges to be welded.
4. Weld the hinge reinforcement on the side support using a spot welder.

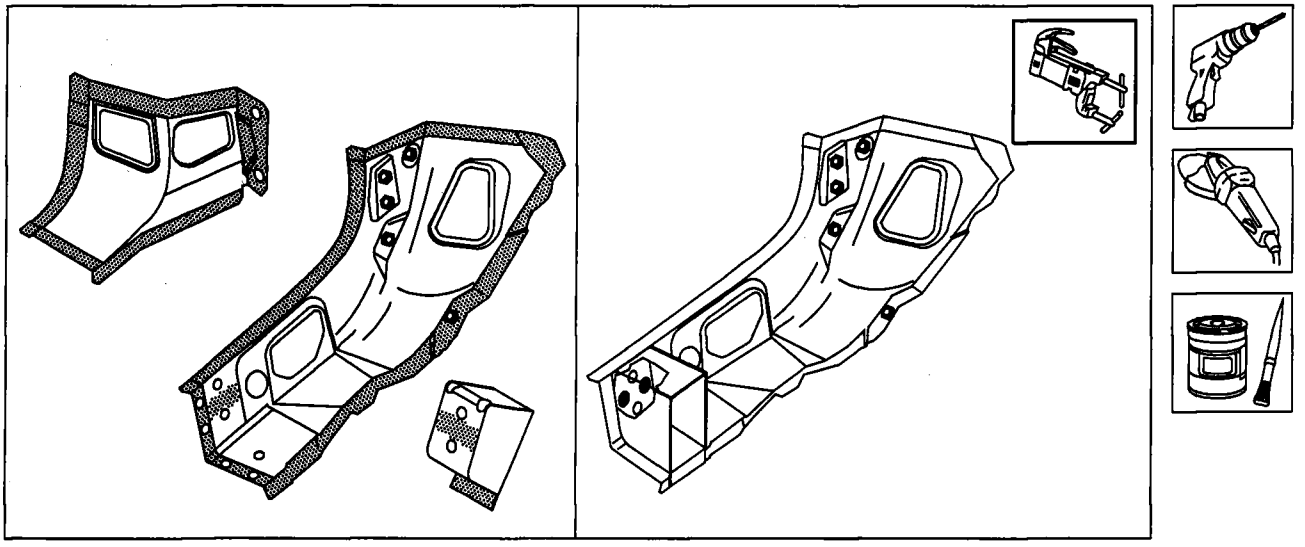

P4F16CM02

Positioning and welding the spare part

1. Position the reinforcement on the vehicle and check that it is perfectly aligned with the adjacent elements.
2. Carry out electrical spot welding as shown in the diagram.
3. Carry out MIG welding to fill the holes made previously in the replacement part.

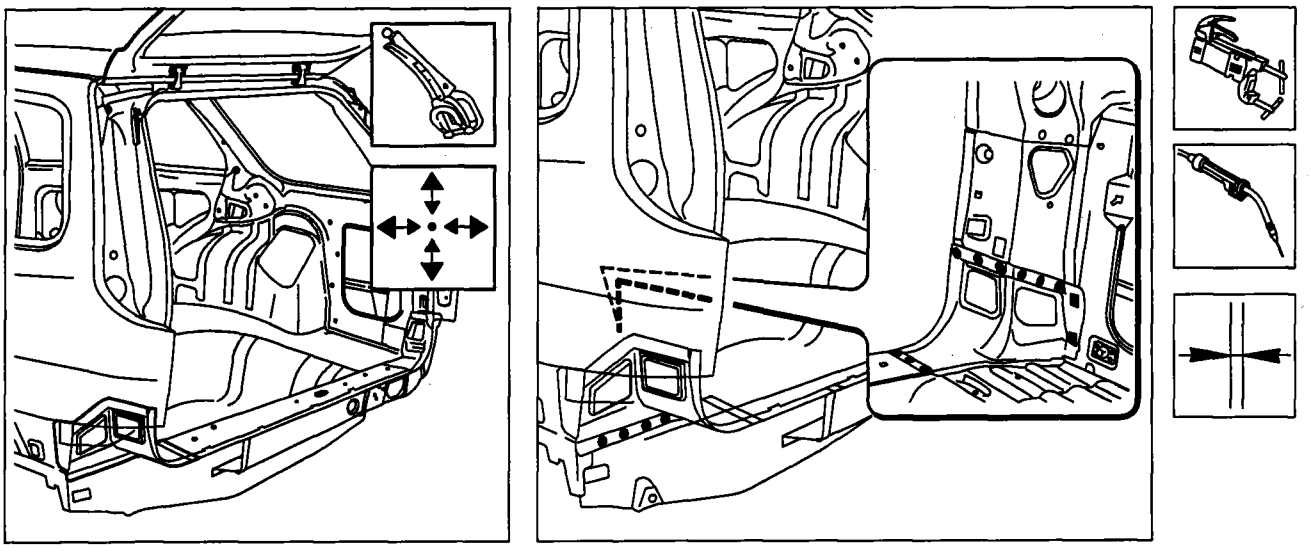

P4F17CM01

1. Position the side filler and check that it is perfectly aligned with the adjacent elements.
2. Carry out electrical spot welding as shown in the diagram.
3. Carry out MIG welding to fill the holes made previously in the replacement part.

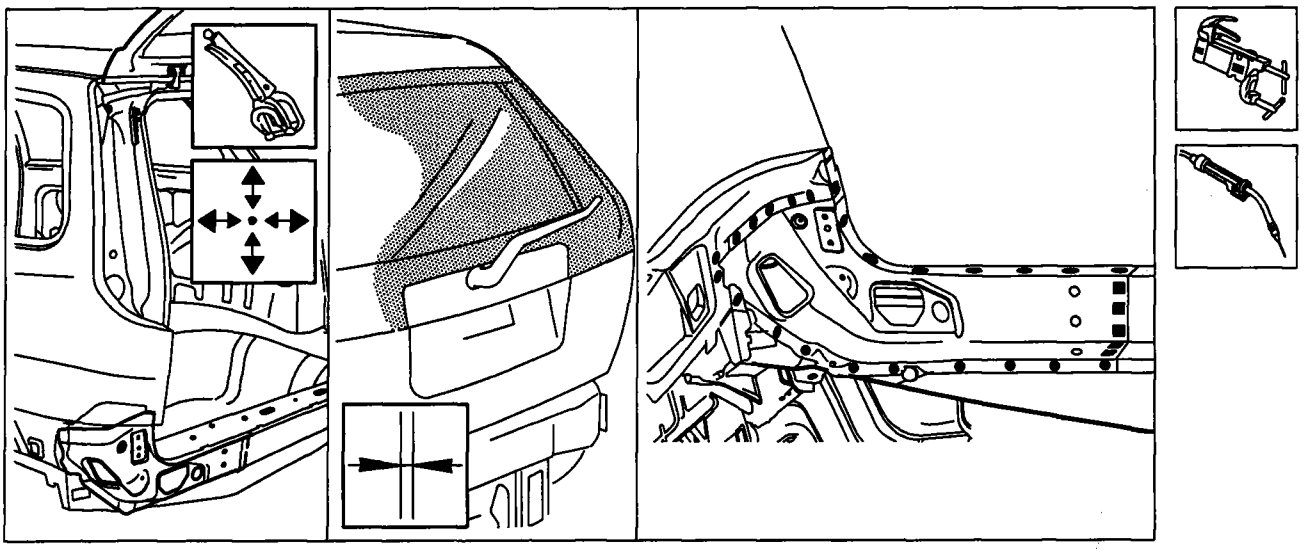

P4F17CM02

Finishing operations

Smooth the welds made using the MIG welder.

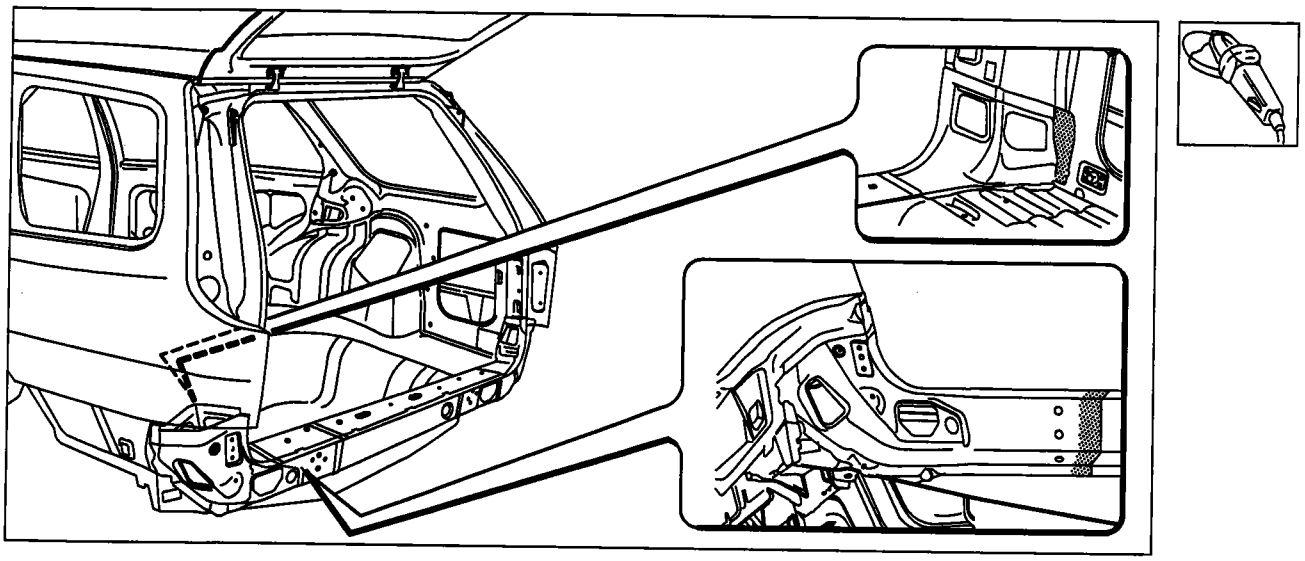

P4F18CM01

Protections

Refer to the instructions given previously on pages 34-36.

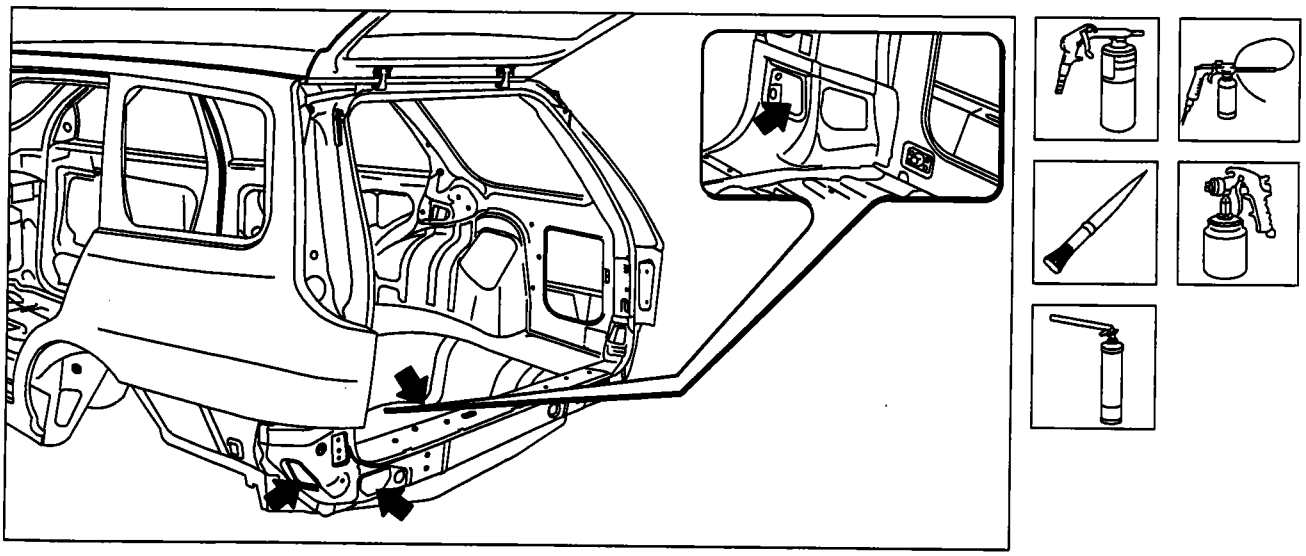

P4F18CM02

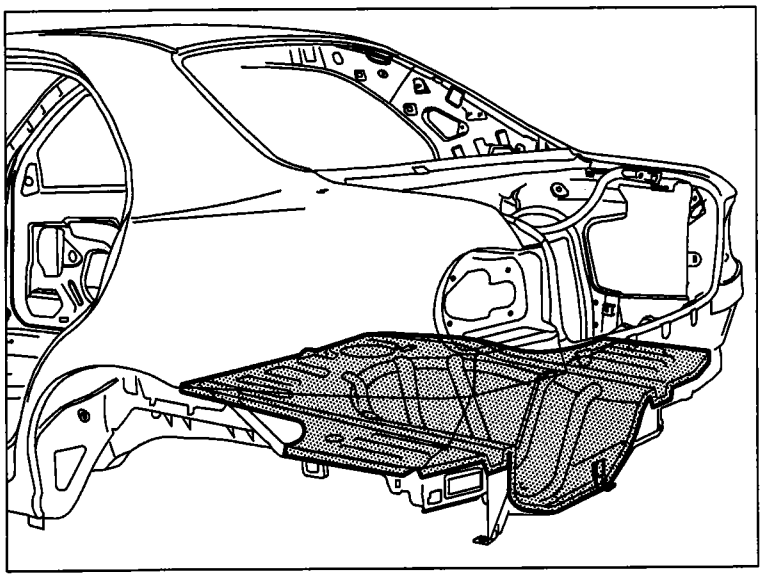

P4F83BM01

REAR FLOOR AND SiDE MEMBERS

Replacing

The component for which the replacement procedure is given is highlighted in the diagram at the side.

Preliminary procedures and accident prevention instructions

- Refer to the previous descriptions for other components.

Preliminary dismantling

- Remove the rear cross member (see: "Replacing body panels - Rear Cross Member)

Removing

- Using a power saw, cut along the dotted lines illustrated below.

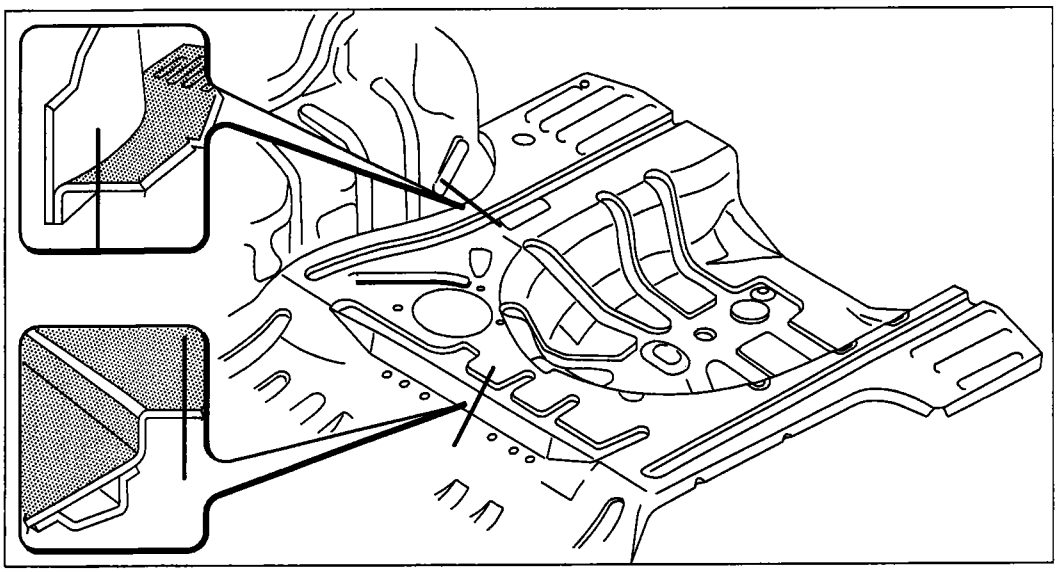

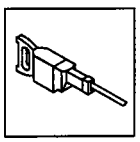

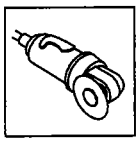

P4F83BM02

70.

Removing off cuts, preparing the edges of the bodyshell

Remove the spot welds along the wheel arches.

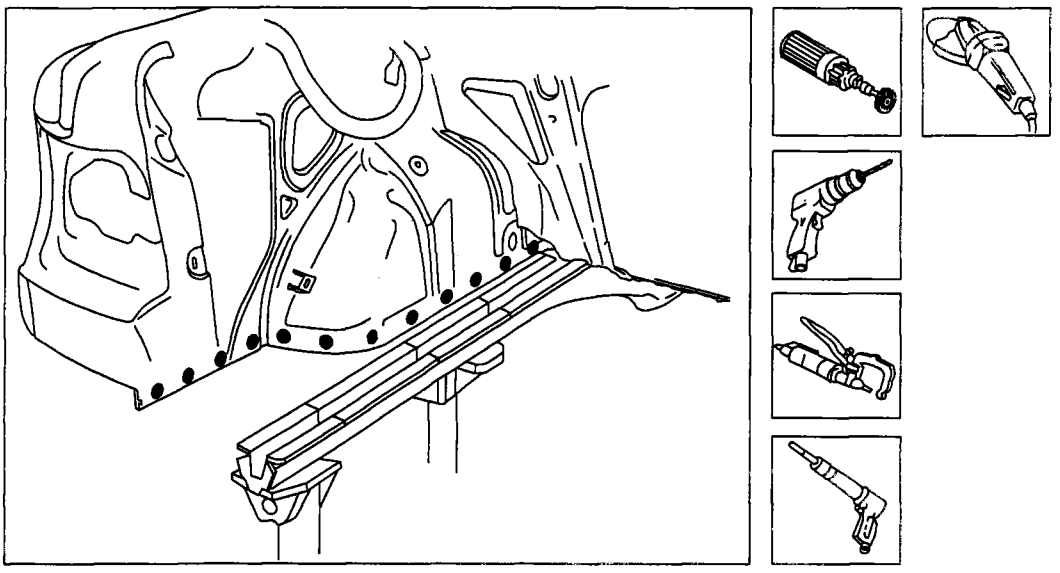

P4F84BM01

Complete replacement of a side member

1. Remove the upper and lower spot welds on the side member.
2. Open the clip tab and remove the side member offcut.
3. Straighten the edges of the bodyshell.
4. Remove the weld residues.

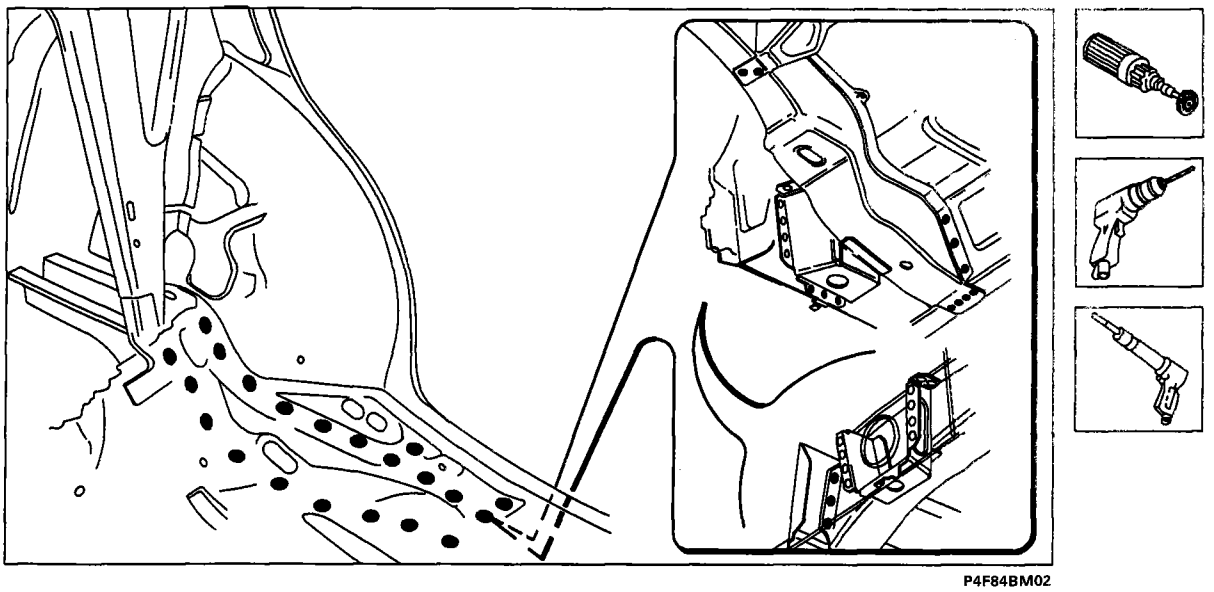

P4F84BM02

Preparing the side member

1. Trace and drill the new side member with a 5 mm drill, as shown in the diagram.
2. Clean the areas involved in the welding.

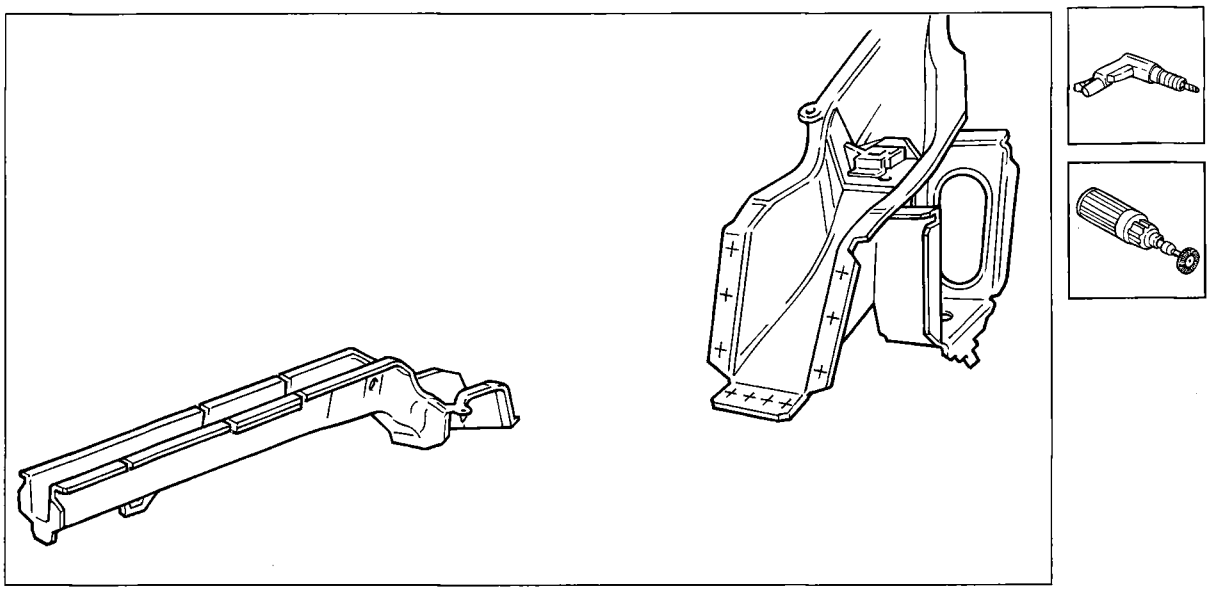

P4F85BM01

Positioning the side member

Correctly position the replacement part using the templates; match and secure the components to be welded using self-locking clamps.

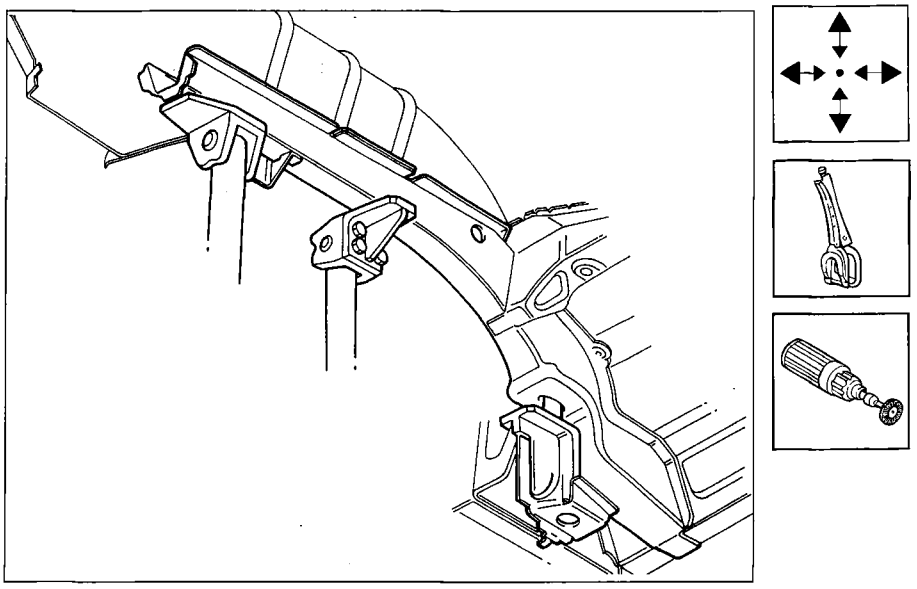

P4F85BM02

70.

Welding the side member

1. Carry out the specific welds as shown in the diagram.

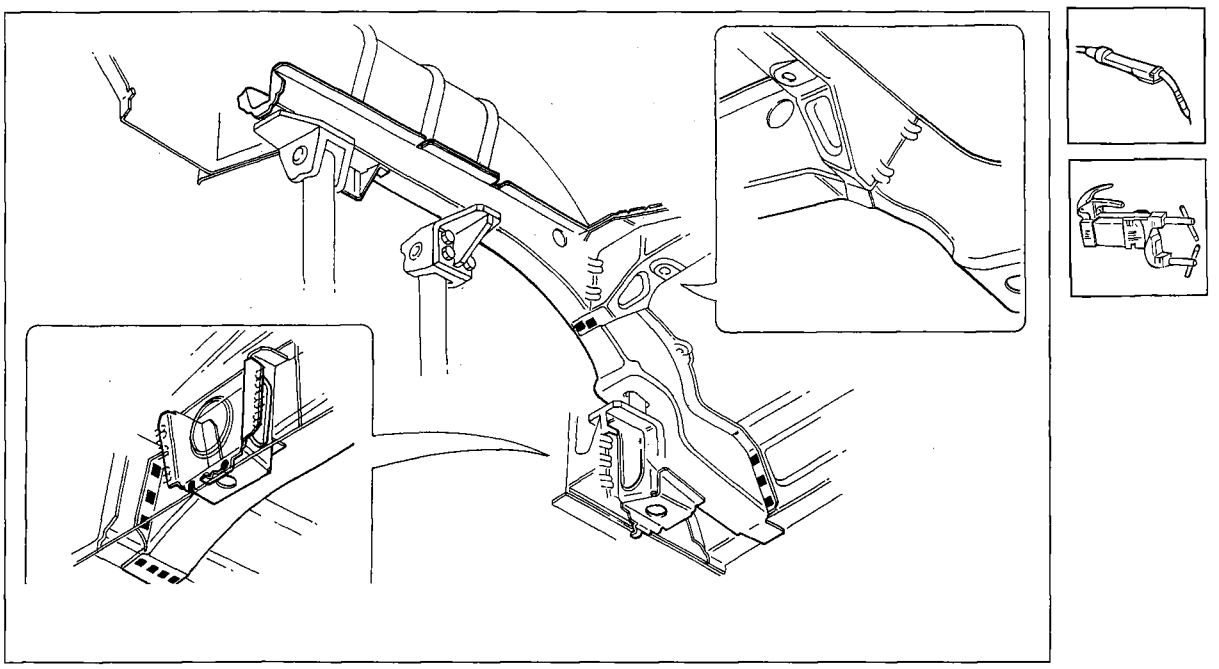

P4F86BM01

2. Carry out the welding for filling.

3. Remove and level the weld residues, using an abrasive grinder.

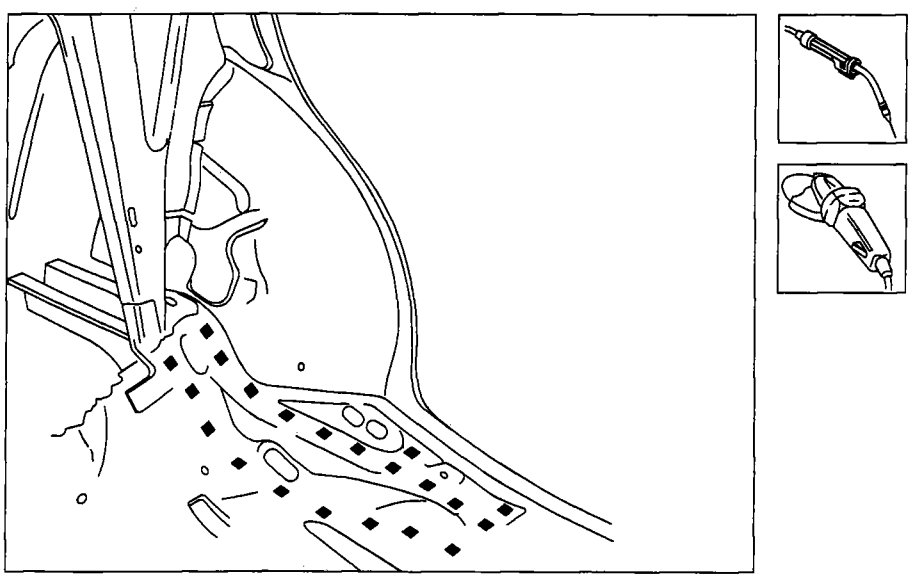

P4F86BM02

Proceed with fitting the rear floor.

Partial replacement of a side member

Preparing the side member

Remove the excess part from the replacement part so that it is 20 mm longer than the part removed from the vehicle.

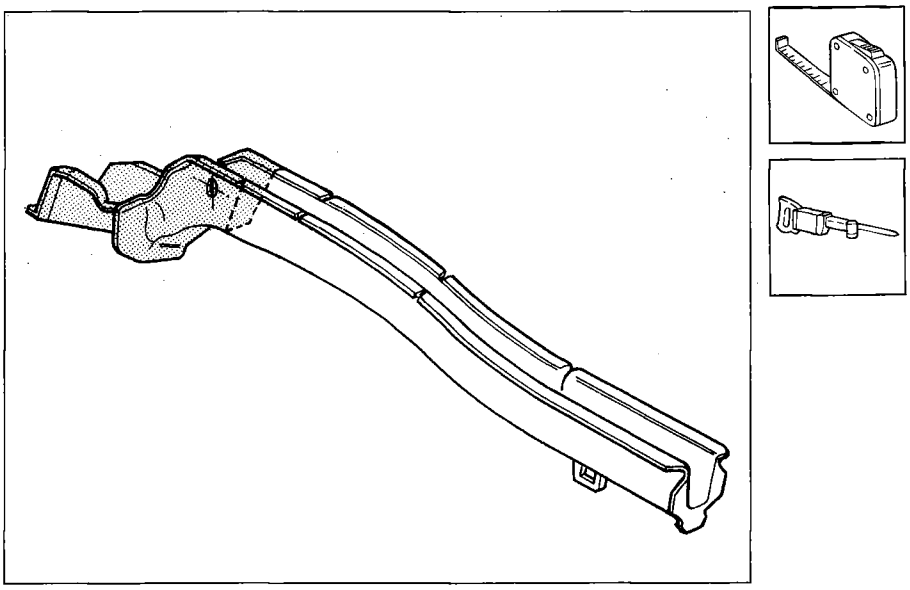

P4F87BM01

Positioning the side member

1. Correctly position the side member using the templates, superimpose it, secure it and trace it.
2. Trim it removing the excess parts.
3. Clean the areas involved with the welding.

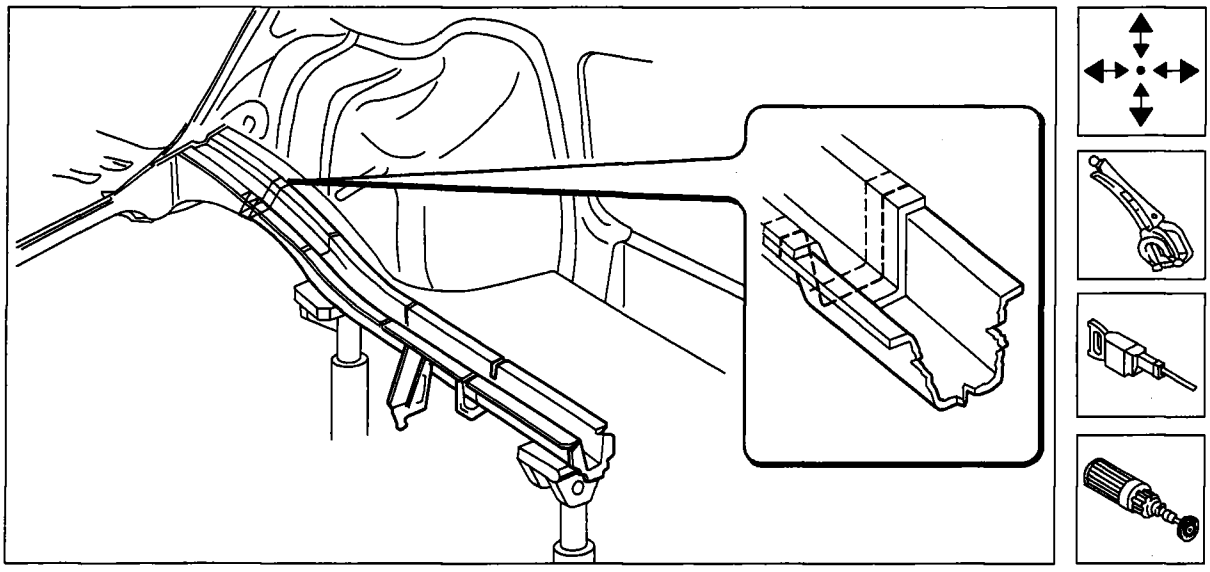

P4F87BM02

70.

Welding the side member and finishing off

1. Proceed with the continuous Mig welding.
2. Remove and level the weld residues.

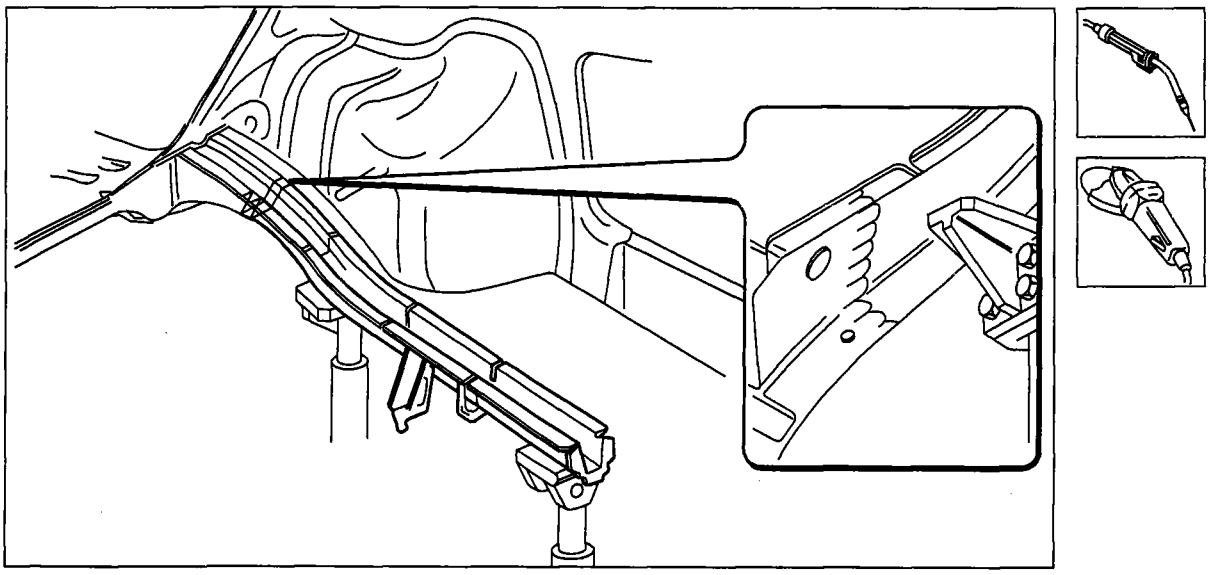

P4F88BM01

Proceed with fitting the rear floor.

Preparing the floor

Remove the excess part from the replacement part so that it is 20 mm longer than the part removed from the vehicle.

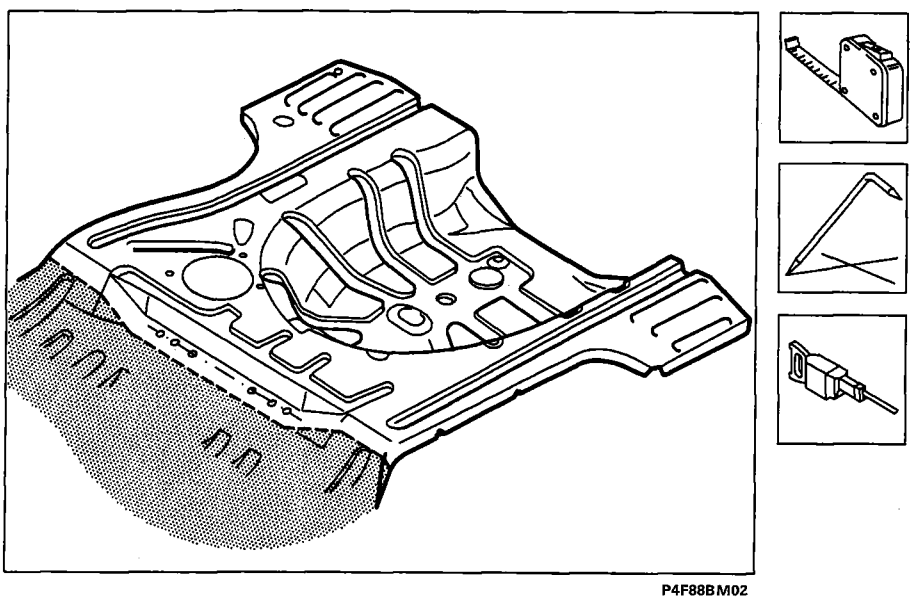

P4F88BM02

Positioning the floor

1. Position the rear floor.
2. Check that the panels are correctly superimposed over the join area.
3. Mark the part to be removed on the bodyshell.
4. Trace the points to be drilled along the contact area with the side members underneath and the wheel arches in order to be able to carry out the MIG welding for filling.
5. Remove the replacement part, remove the excess part from the bodyshell and drill the replacement part. Also drill the sides of the replacement part which will be welded later to the wheel arches.

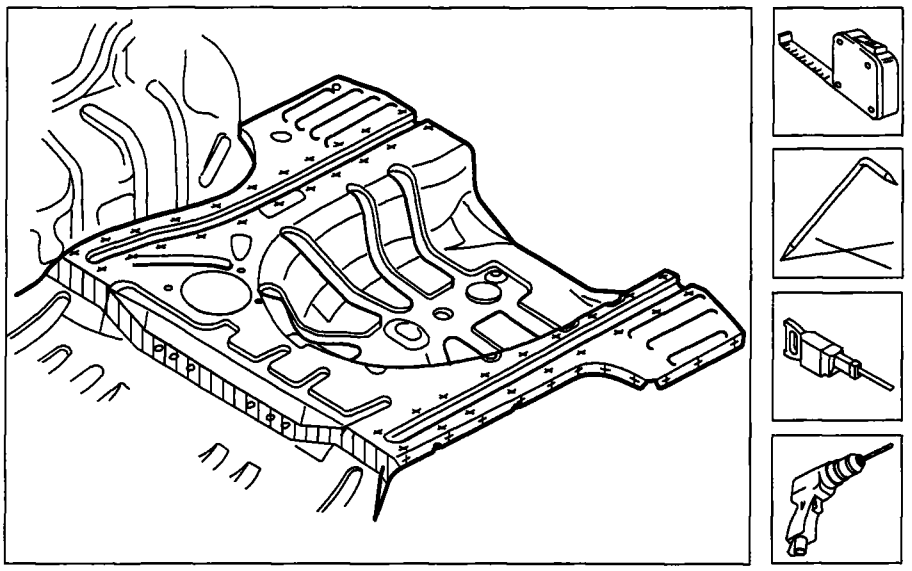

P4F89BM01

Welding the floor

1. Correctly reposition the replacement part and secure it with self-locking clamps.
2. Fix the replacement part to the bodyshell tacking it edge to edge to the parts to be welded
3. Weld and fill the holes made previously in the replacement part.
4. Finish off the welding edge to edge.

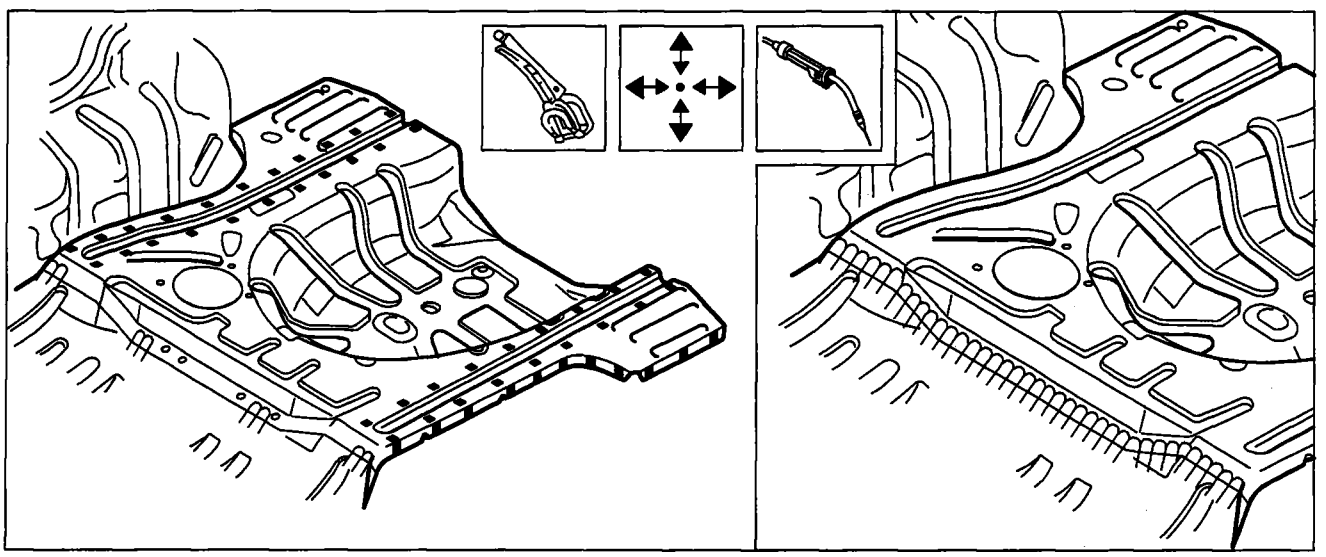

P4F89BM02

70.

Finishing operations

Remove and level the weld residues.

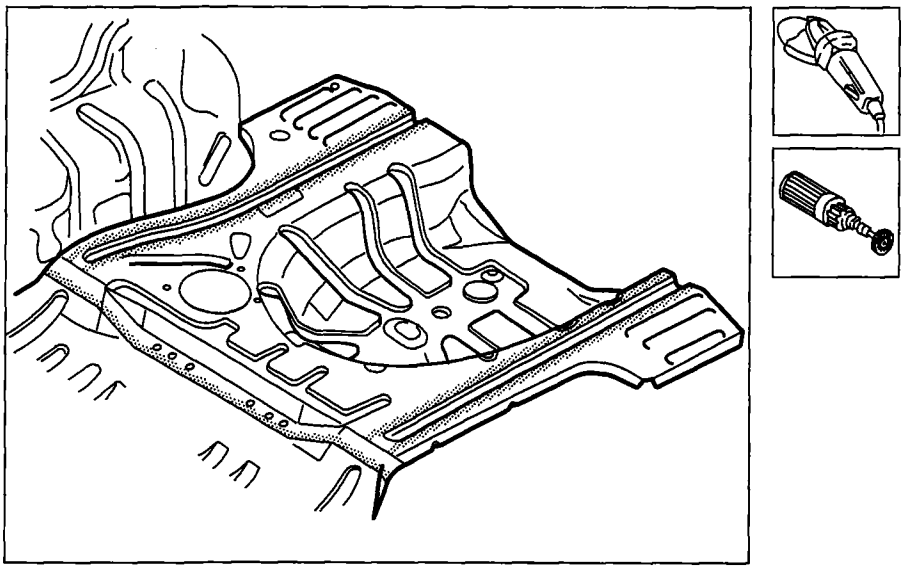

P4F90BM01

Proceed with fitting the rear cross member (see:: "Rear Cross Member")

Protections

Refer to the previous description on pages 34-36.

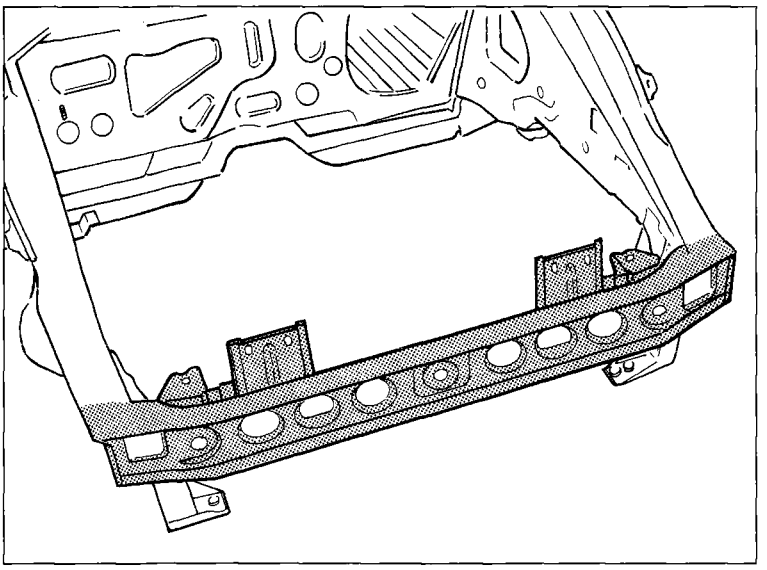

P4F91BM01

FRONT CROSS MEMBER AND LINING (7090G 07)*

Replacing

(*) This number indicates the operation code given in the Flat rate manual.

The component for which the replacement procedure is given is highlighed in the diagram at the side.

Preliminary procedures and accident prevention instructions

Refer to the description on page 33.

Preliminary dismantling

Remove the moving parts of the bodywork and interior fittings, which could impede the repair operations or be damaged during them.

Removing

Cut the component to be replaced and remove it from the vehicle.

The most important sections of the body panel are shown in order to allow the operator to adjust the position and the depth of the cutting so as not to damage the panels underneath.

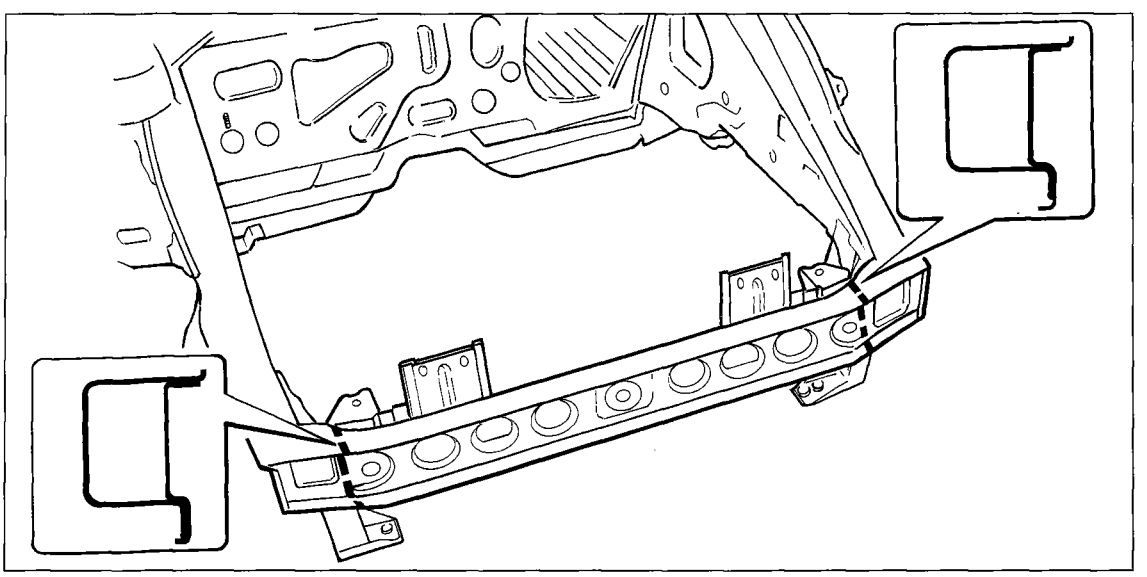

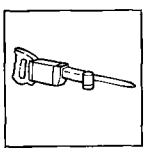

P4F91BM02

70.

Preparing the edges of the bodyshell

1. Straighten any distortions to the bodyshell and prepare it as described on page 34.
2. Apply an electro-weldable anti-rust protective to the edges to be welded.

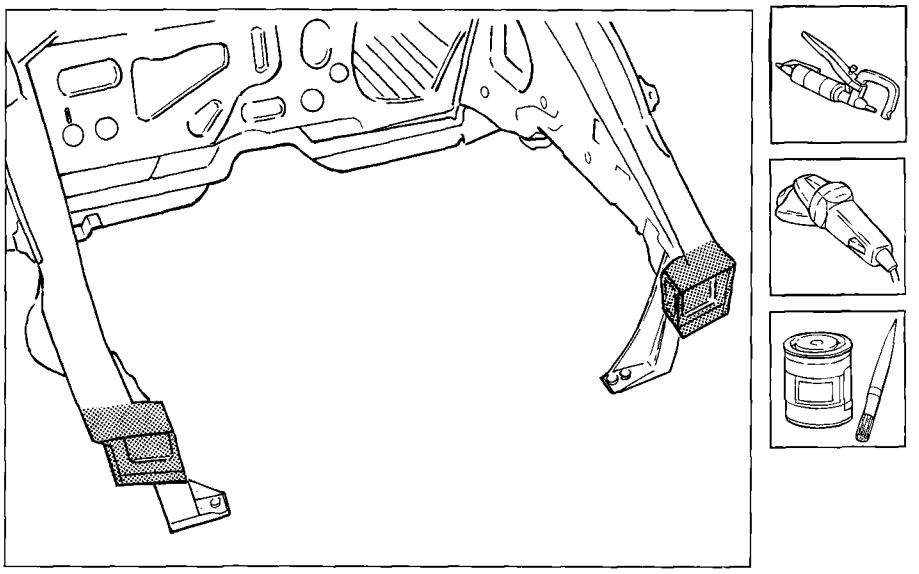

P4F92BM01

Preparing the front cross member and lining

1. Grind the internal and external edges of the front cross member (1) and lining (2).
2. Apply an electro-weldable anti-rust protective to the internal edges to be welded.

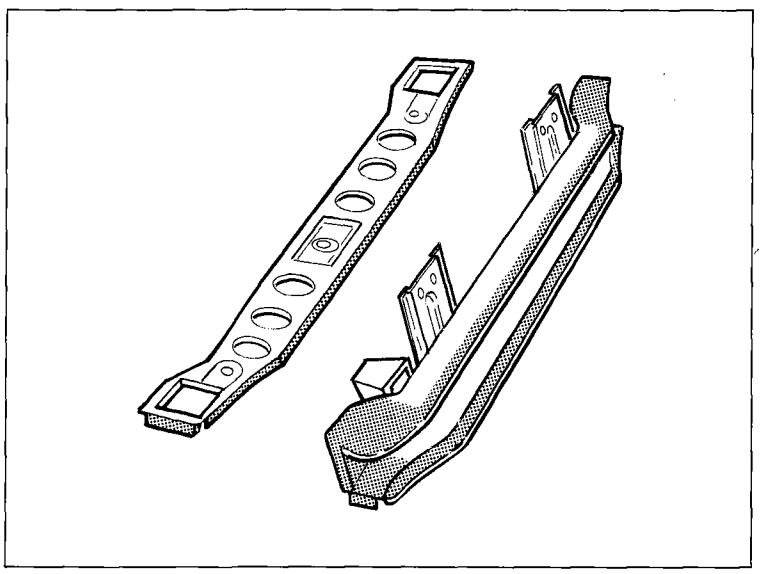

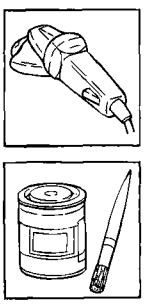

P4F92BM02

Positioning and welding the front cross member

1. Position the front cross member on the vehicle and check that it is perfectly aligned with the adjacent elements.
2. Carry out electrical spot welding as shown in the diagram.

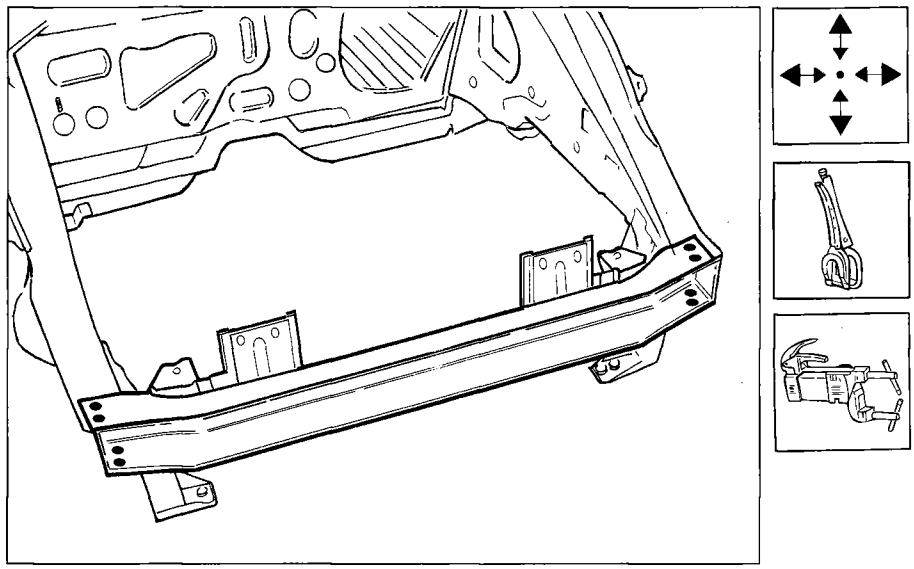

P4F93BM01

Positioning and welding the lining

1. Position the lining on the vehicle and check that it isperfectly aligned with the adjacent elements.
2. Carry out the electrical spot welding as shown in the diagram.

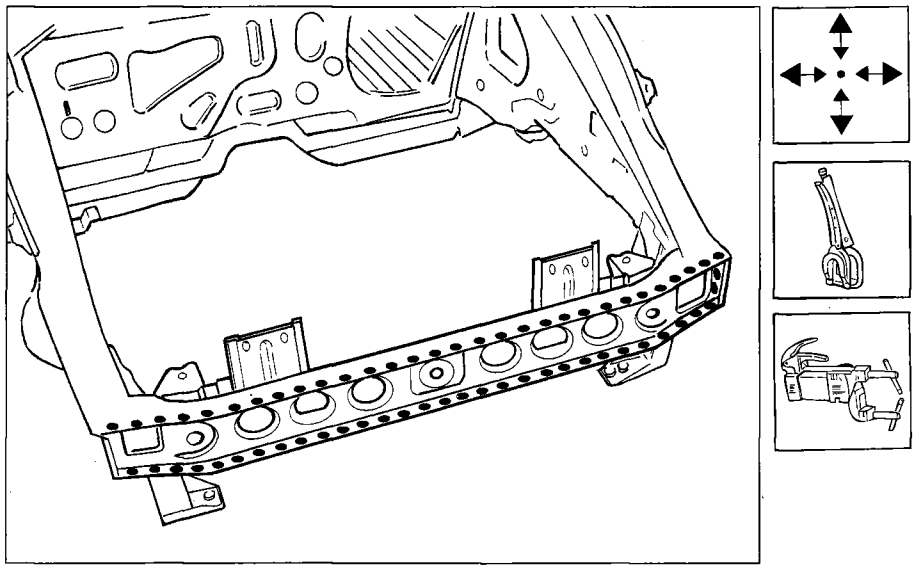

P4F93BM02

70.

Finishing operations

Remove and level the weld residues using a disc grinder.

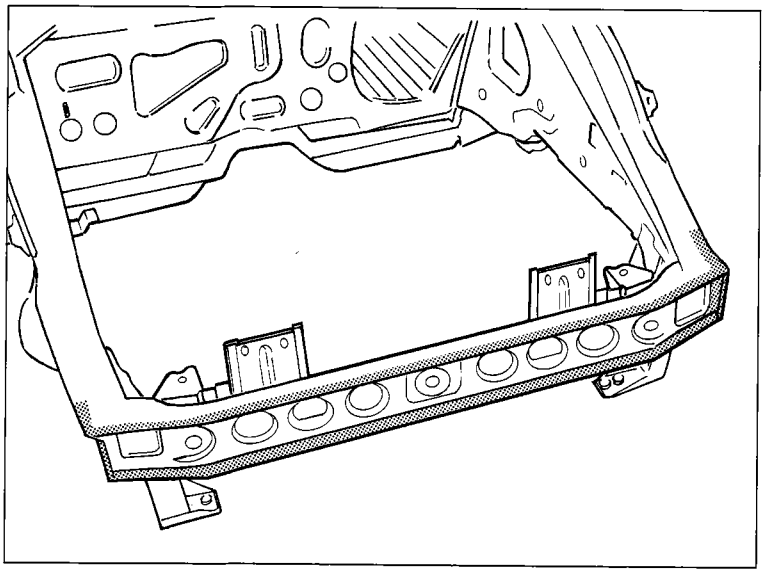

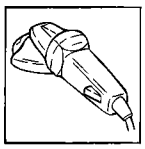

P4F94BM01

Protections

Refer to the previous description on pages 34-36.

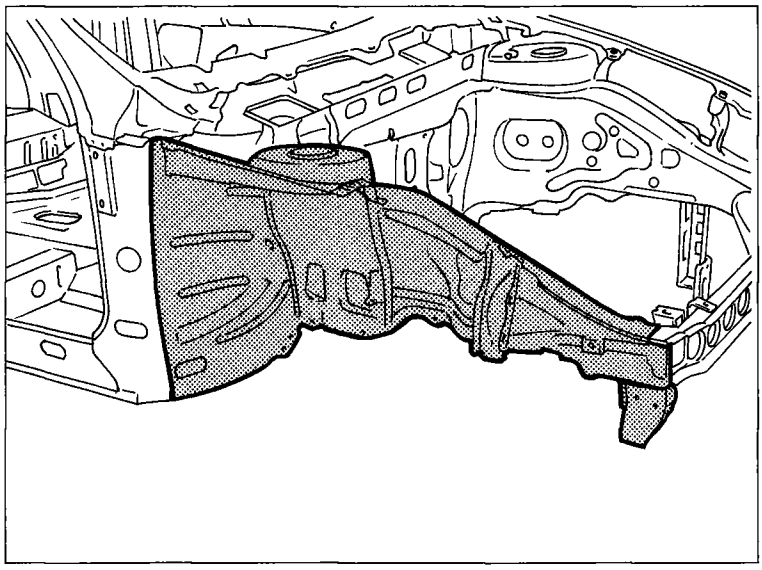

P4F95BM01

COMPLETE FRONT PANEL (7090G 10)*

Replacing

(*) This number indicates the operation code given in the Flat rate manual.

The component for which the replacement procedure is given is highlighted in the diagram at the side.

Preliminary procedures and accident prevention instructions

Refer to the description on page 33.

Preliminary dismantling

Remove the moving parts of the bodywork and interior fittings, which could impede the repair operations or be damaged during them.

Removing

Cut the component to be replaced and remove it from the vehicle, also remove the brackets inside the engine compartment removing the spot welds using a drill.
The most important sections of the body panel are shown in order to allow the operator to adjust the position and the depth of the cutting so as not to damage the panels underneath.

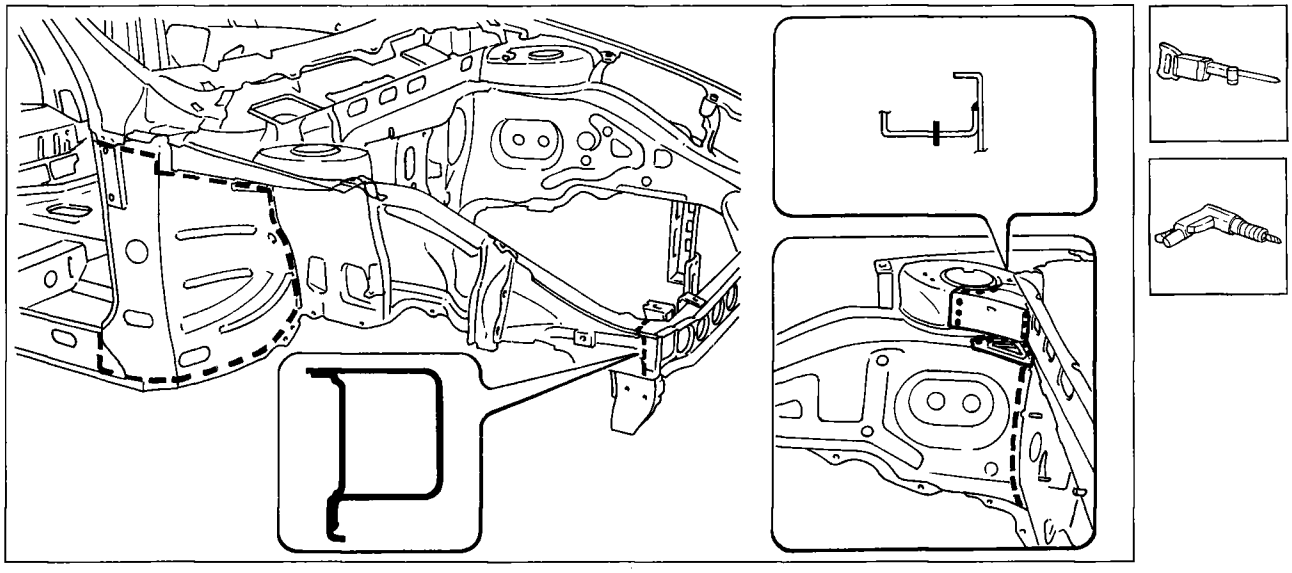

P4F95BM02

Preparing the edges of the bodyshell

1. Straighten any distortions to the bodyshell and prepare it as described on page 34.
2. Apply an electro-weldable anti-rust protective to the edges to be welded.

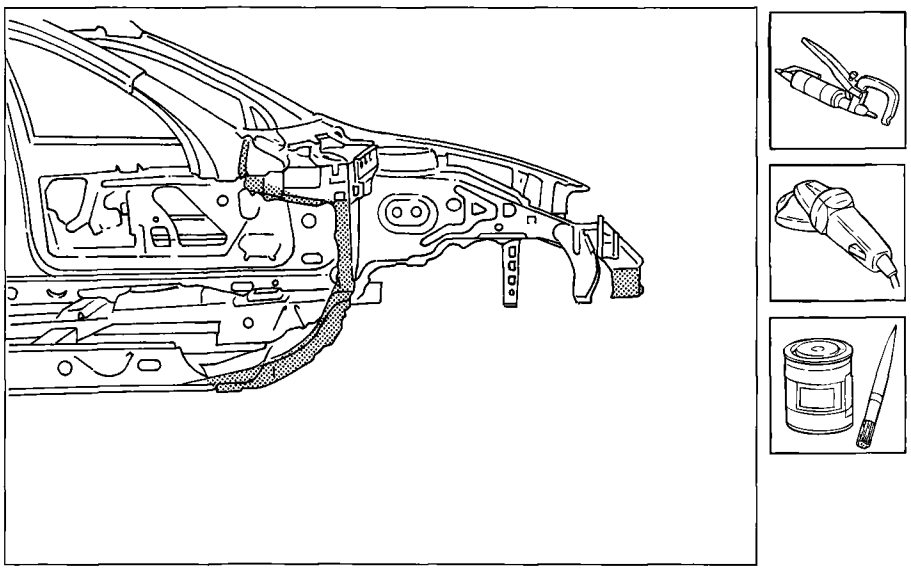

P4F96BM01

Preparing the inner panel

1. Grind the internal and external edges.
2. Apply an electro-weldable anti-rust protective to the internal edges to be welded.

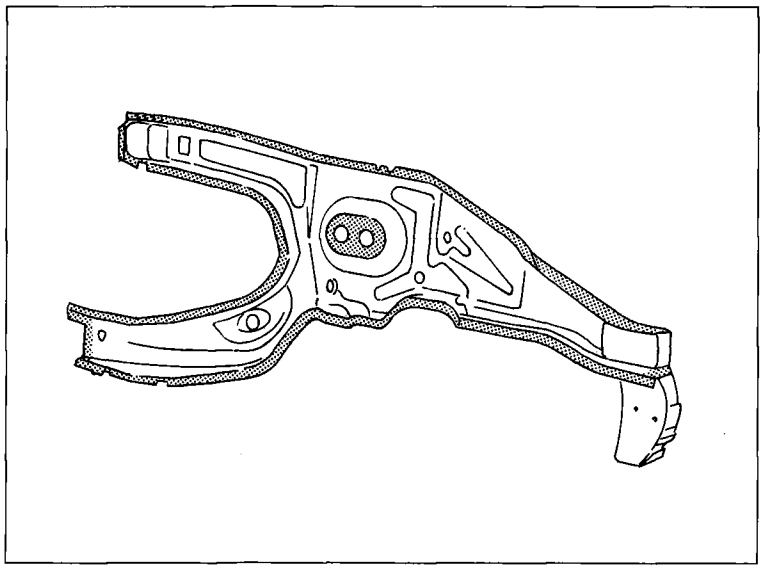
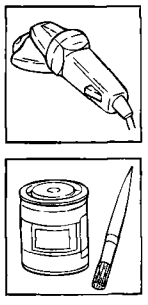

P4F96BM02

Positioning the inner panel

Position the replacement part on the vehicle and check that it is perfectly aligned with the adjacent elements.

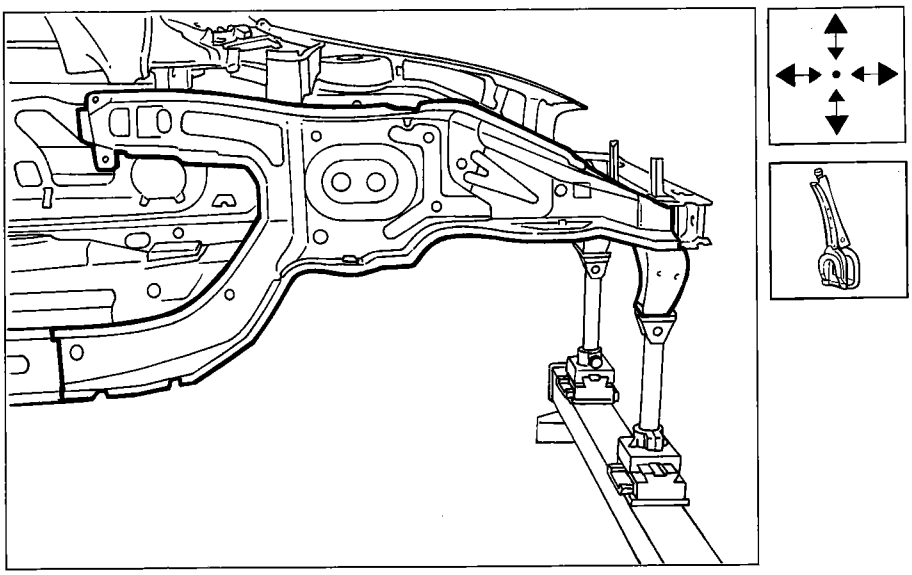

P4F97BM01

Welding the inner panel

Carry out the electrical spot welding as shown in the diagram.

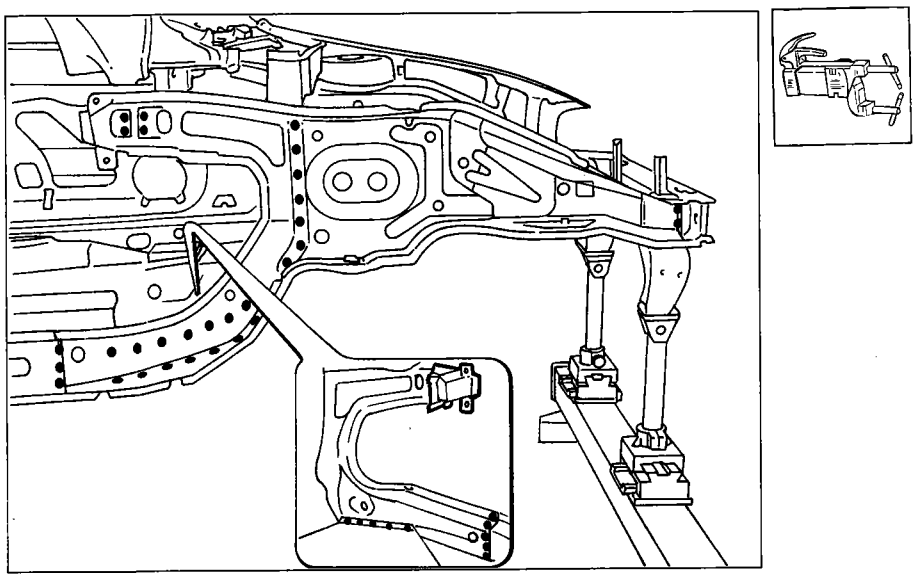

P4F97BM02

Copyright by Fiat Auto

70.

Preparing the outer panel

Grind the internal and external edges.

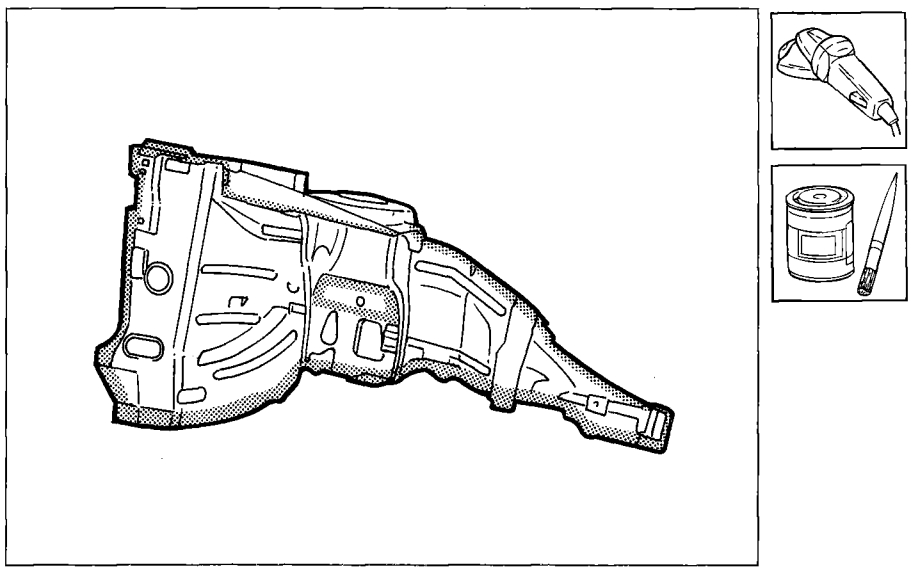

P4F98BM01

Positioning the outer panel

Position the replacement part on the vehicle and check that it is perfectly aligned with the adjacent elements.

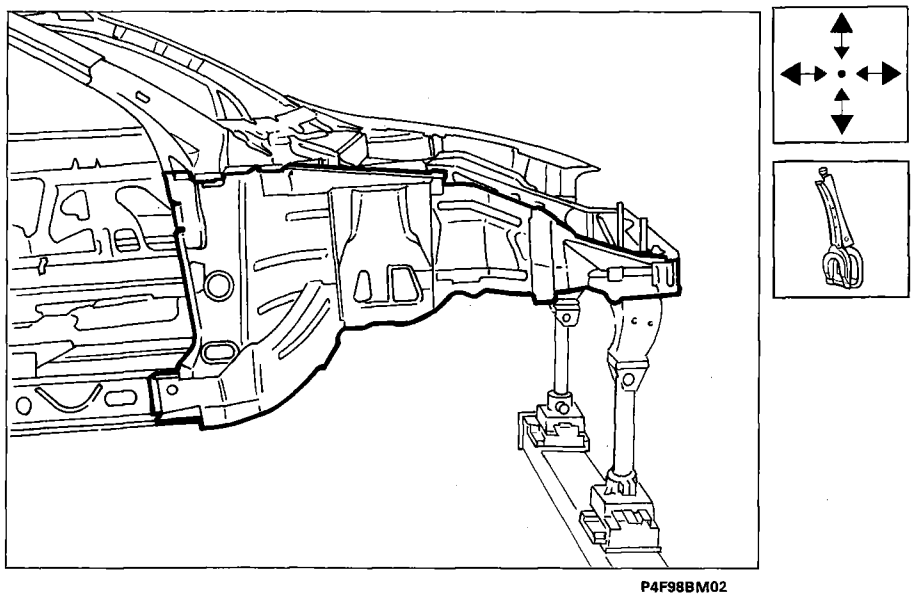

P4F98BM02

Welding the outer panel

Carry out electrical spot welding as shown in the diagram.

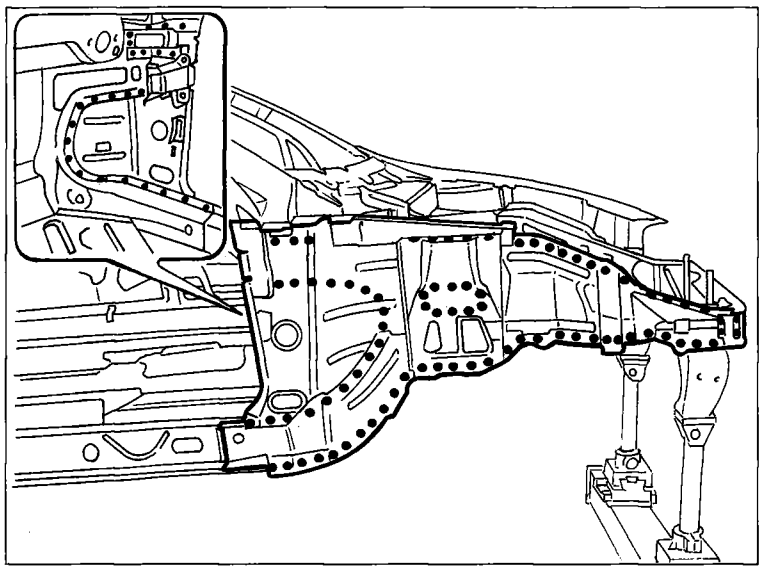

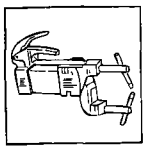

P4F99BM01

Preparing and welding the brackets

1. Make equidistant holes in the edges of the brackets.
2. Position the replacement part on the vehicle and check that it is perfectly aligned with the adjacent elements.
3. Using the MIG welder carry out welding for filling in the holes made previously.

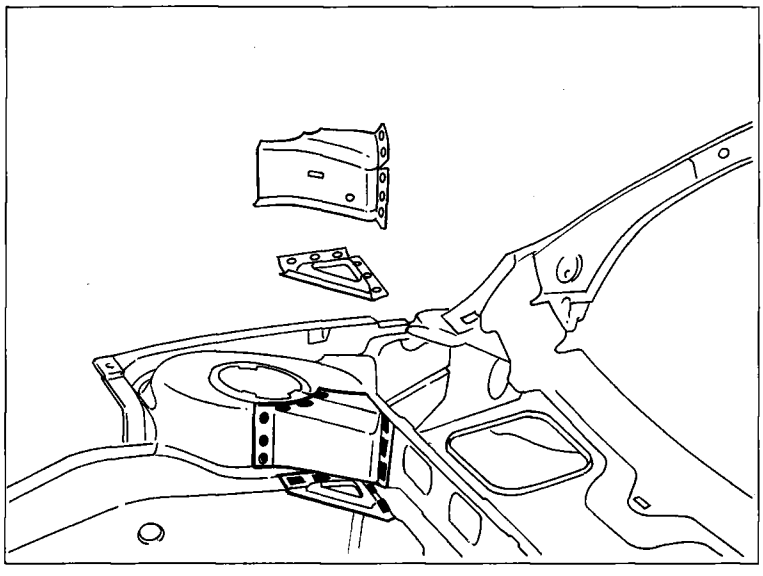

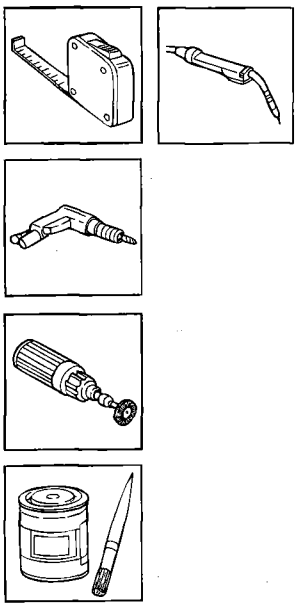

P4F99BM02

Finishing operations

Smooth the welds made using the MIG welder.

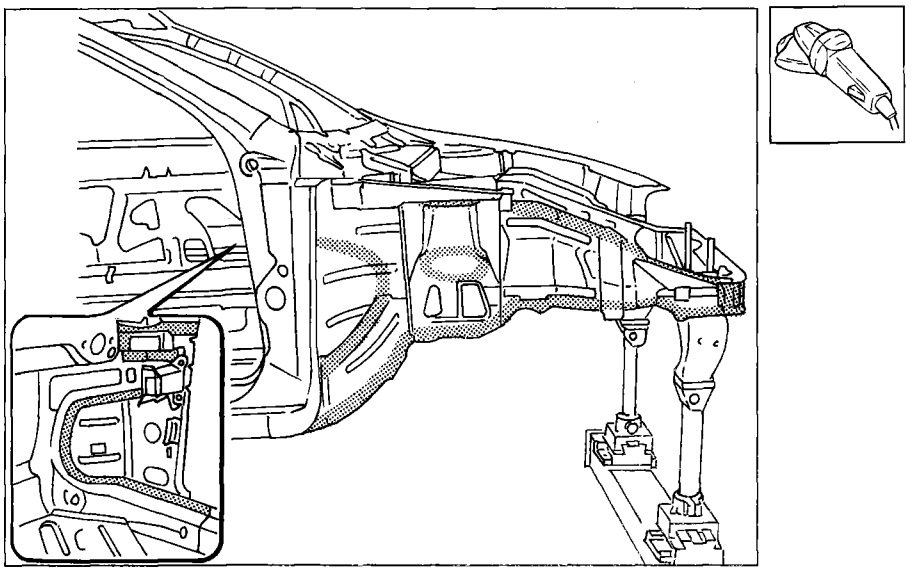

P4F00CM01

Protections

Refer to the previous description on pages 34-36.

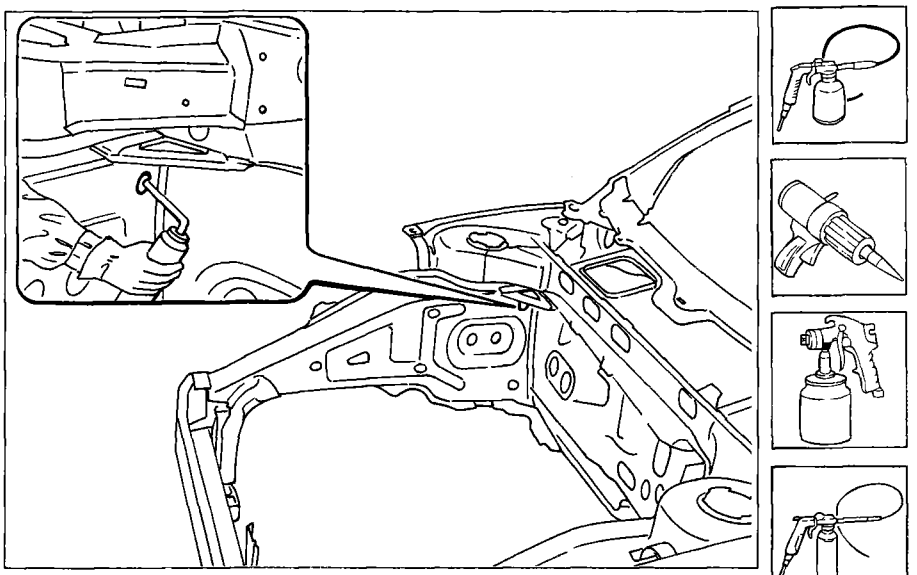

P4F00CM02

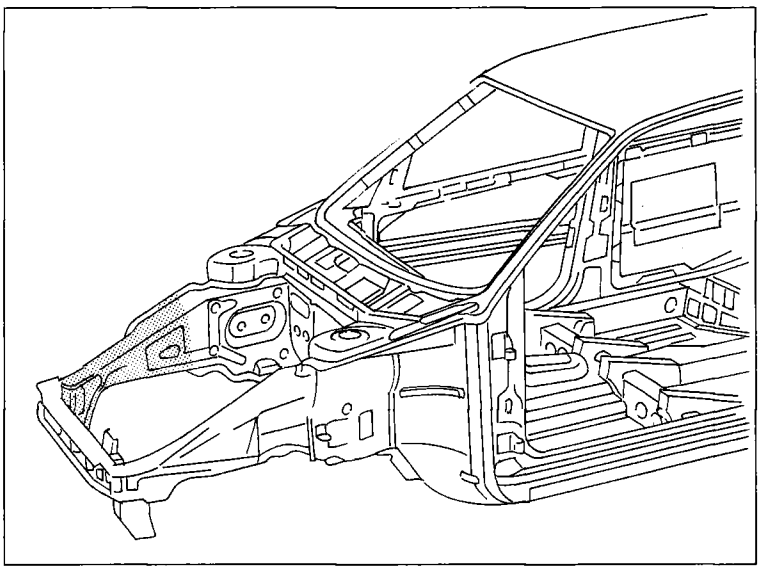

P4F29BM04

PARTIAL FRONT PANEL

Replacing

The component for which the replacement procedure is given is highlighted in the diagram at the side.

Preliminary procedures and accident prevention instructions

- Refer to the previous description on page 33.

Preliminary dismantling

- Remove the front cross member (see: "Replacing body panels - Front cross member)

Removing

- Cut the part to be replaced and remove it from the vehicle.

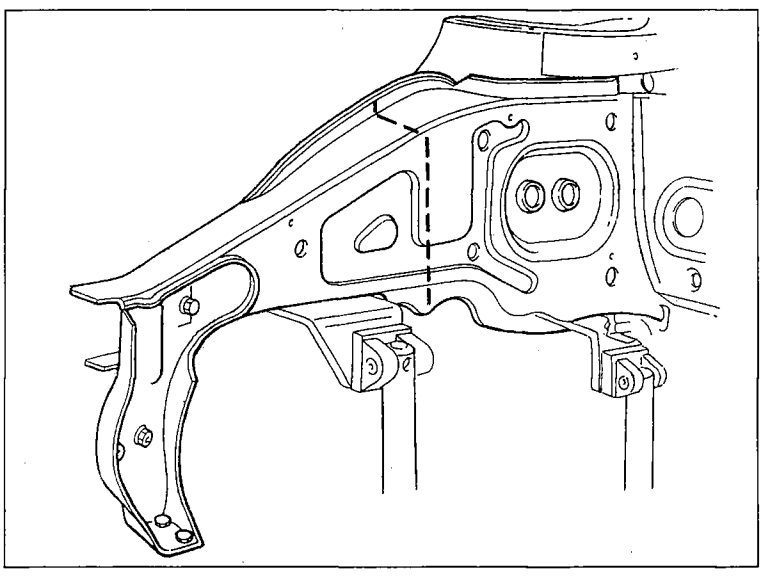

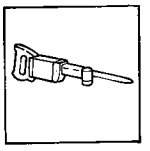

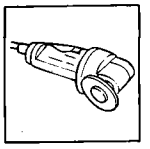

P4F01CM01

4F01CM

70.

Removing off cuts and preparing edges of bodyshell

Straighten any distortions to the bodyshell and prepare it as described on page 34.

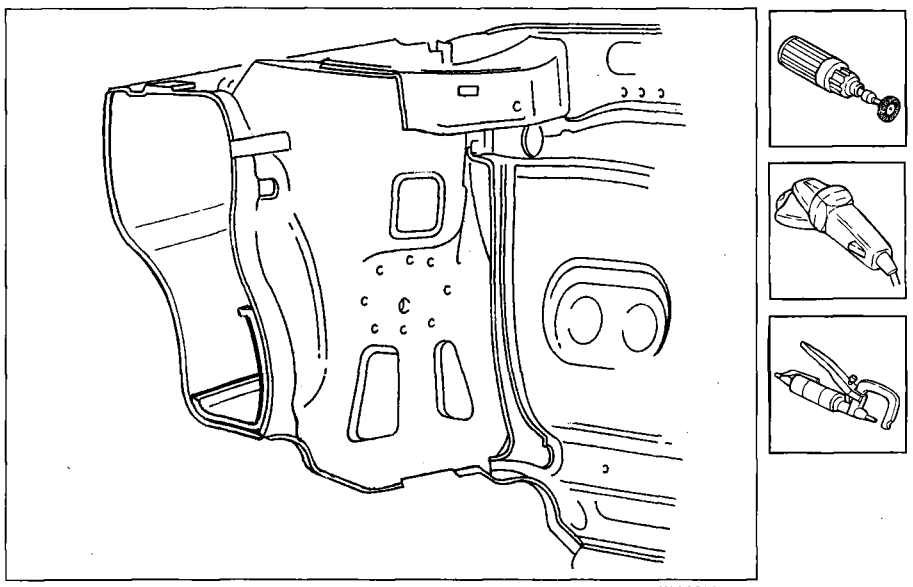

P4F02CM01

Preparing the inner panel

Remove the excess part from the replacement part so that it is 20 mm longer than the part previously removed from the vehicle.

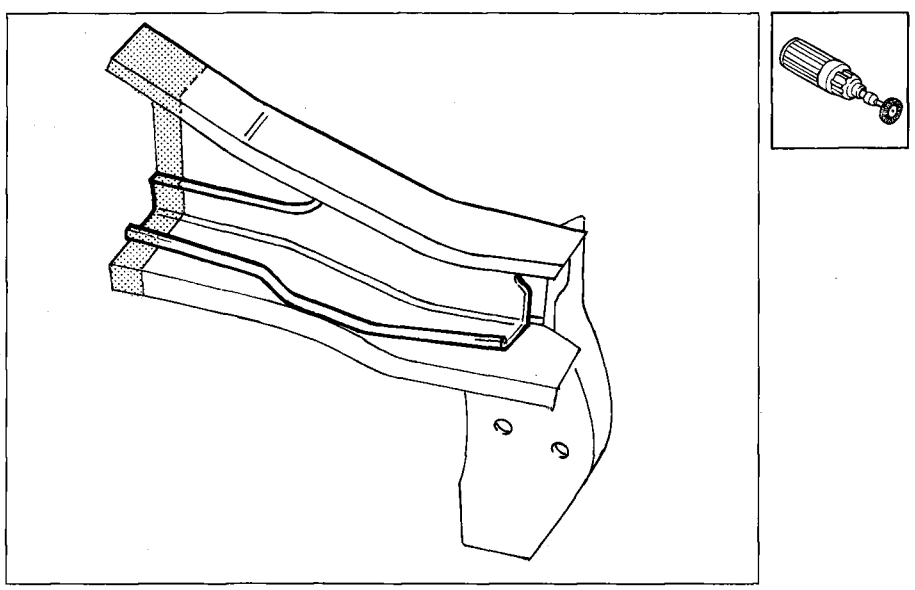

P4F02CM02

4F02CM

Positioning the replacement part

1. Position the replacement part on the vehicle and on the template, and after having checked that it is perfectly superimposed, mark the parts to be removed on the vehicle (1) and on the replacement part reinforcement (2).

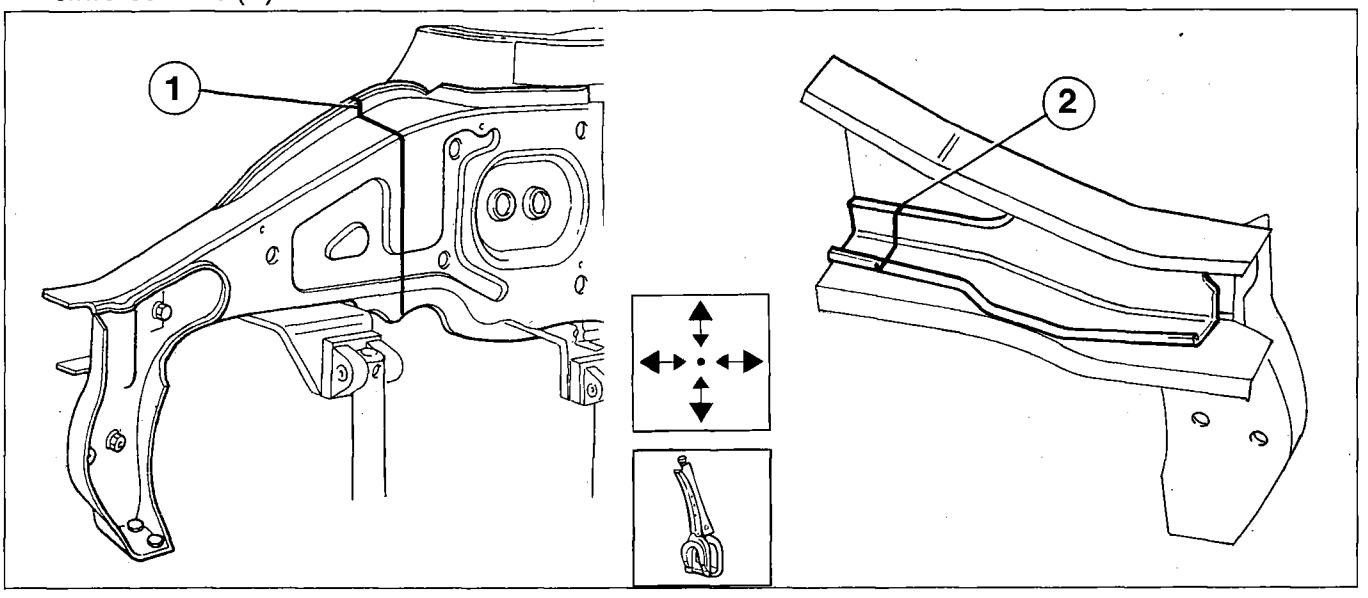

P4F03CM01

2. Remove the part previously marked with the cutting line (1) from the bodyshell, taking care not to damage the inner reinforcement.

3. Remove the reinforcement part previously marked with the cutting line (2) from the replacement part.

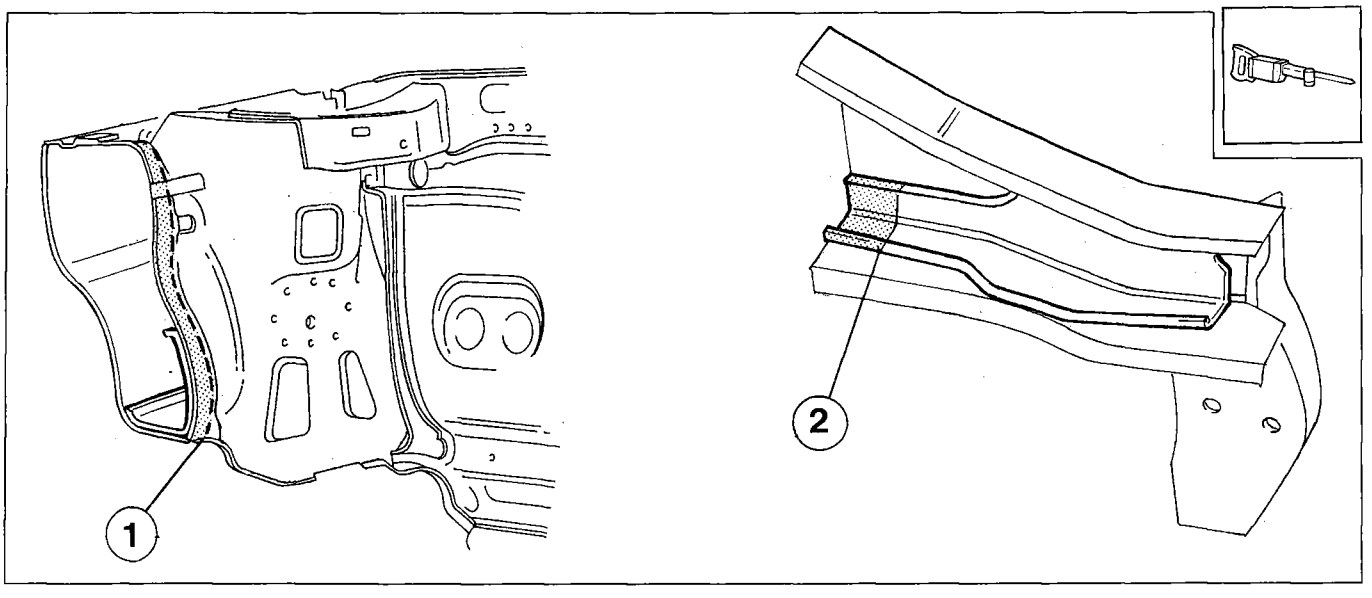

P4F03CM02

Copyright by Fiat Auto

Welding the spare part

Reposition the replacement part on the vehicle and on the template, check that it is perfectly aligned, then weld the panel and after that the reinforcement.

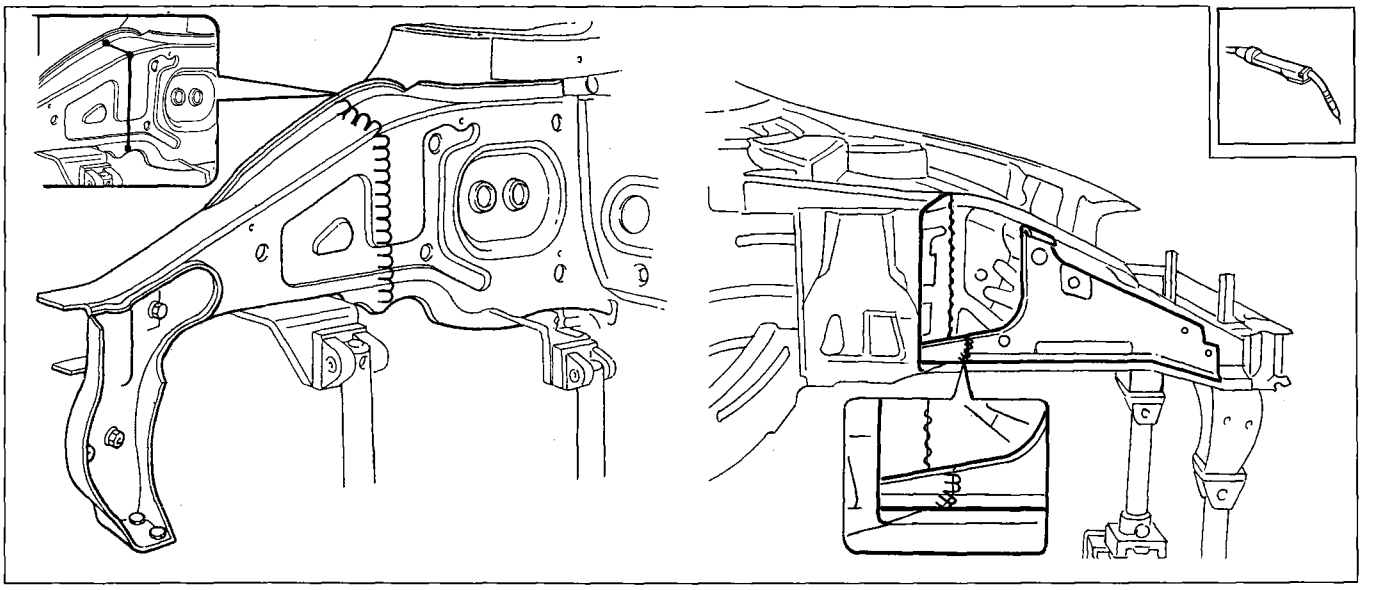

P4F04CM01

UUUUUUU Continuous MIG welding

Preparing and positioning the outer panel

1. Remove the excess part from the replacement part so that it is 20 mm longer than the part previously removed from the vehicle.
2. Position it on the template and on the vehicle marking it on the vehicle with the cutting line (1).
3. Remove the area previously marked by the cutting line (1) from the vehicle.

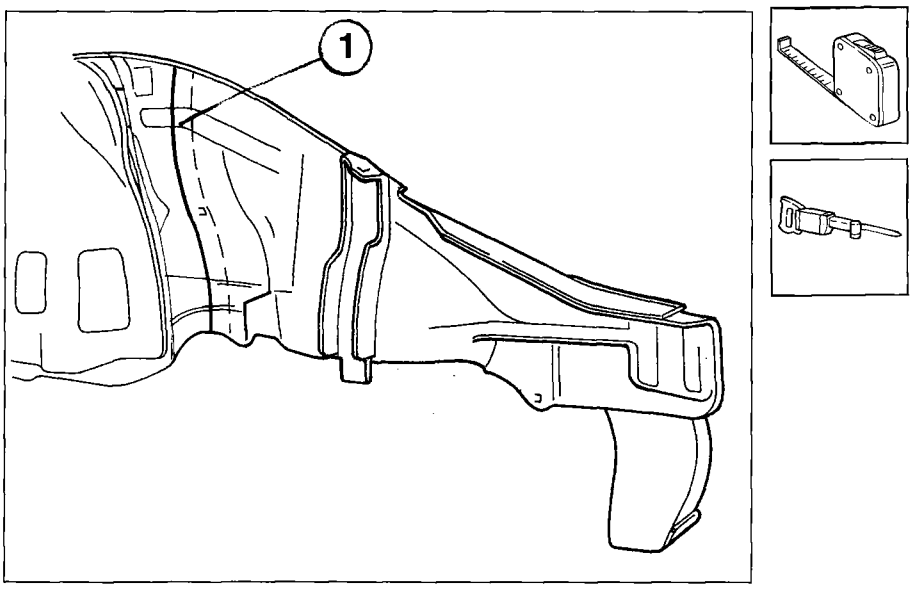

P4F04CM02

4F04CM

Welding the spare part

Reposition the replacement part on the template and on the bodyshell, align it correctly, then weld it as illustrated in the diagram.

Carry out the three welds as illustrated so that they are not positioned along the same line and therefore appropriately offset to one another (see page 32 of this manual).

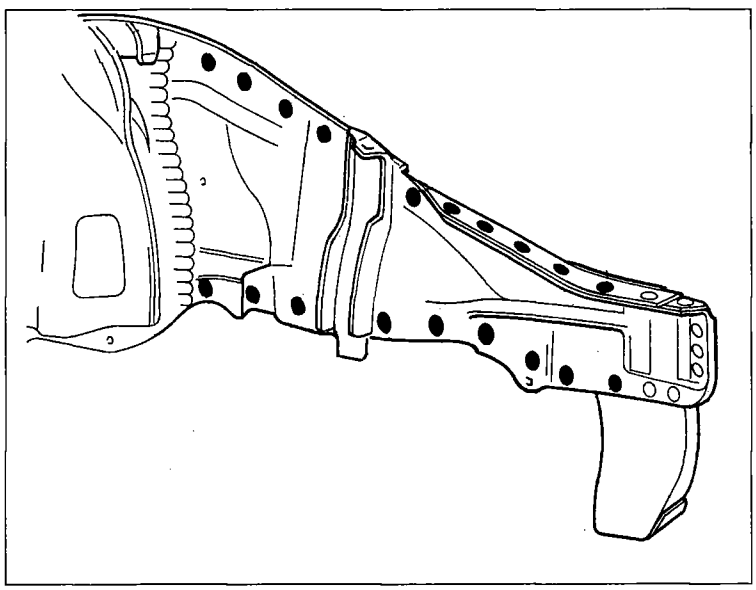

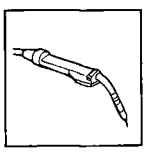

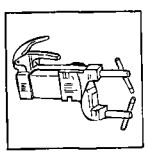

UUUUUUUU Continuous MIG welding
••••• Spot welding

P4F05CM01

Finishing operations

Remove and level the weld residues.

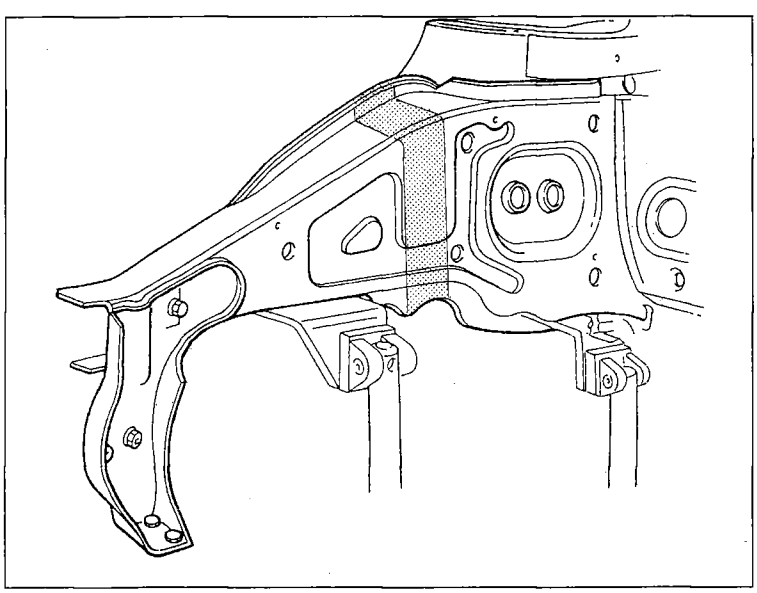

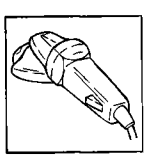

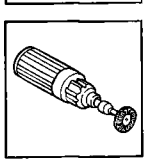

P4F05CM02

Proceed with fitting the front cross member (see: "Front cross member")

Protections

Refer to the previous description on pages 34-36.

4F05CM

Copyright by Fiat Auto

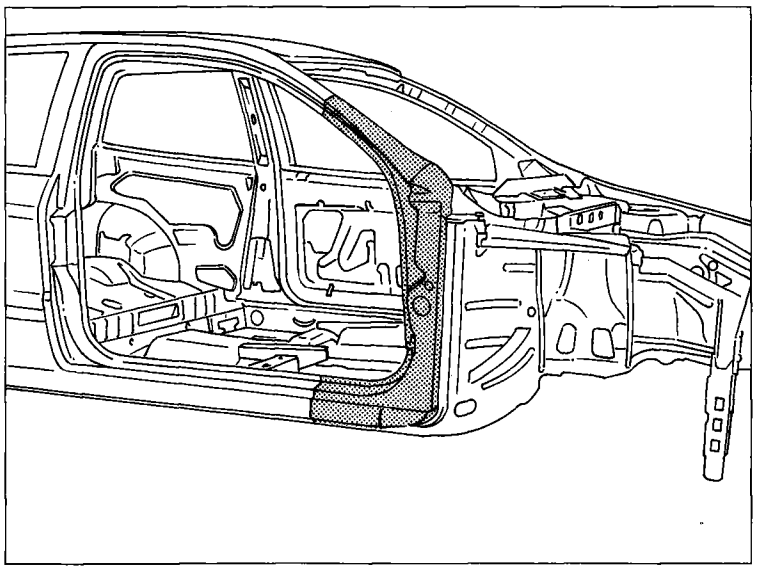

P4F06CM01

FRONT PILLAR (7090G 30)*

Replacing

(*) This number indicates the operation code given in the Flat rate manual.

The component for which the replacement procedure is given is highlighed in the diagram at the side.

Preliminary procedures and accident prevention instructions

Refer to the description on page 33.

Preliminary dismantling

Remove the moving parts of the bodywork and interior fittings, which could impede the repair operations or be damaged during them.

Removing

Cut the component to be replaced and remove it from the vehicle.

The most important sections of the body panel are shown in order to allow the operator to adjust the position and the depth of the cutting so as not to damage the panels underneath.

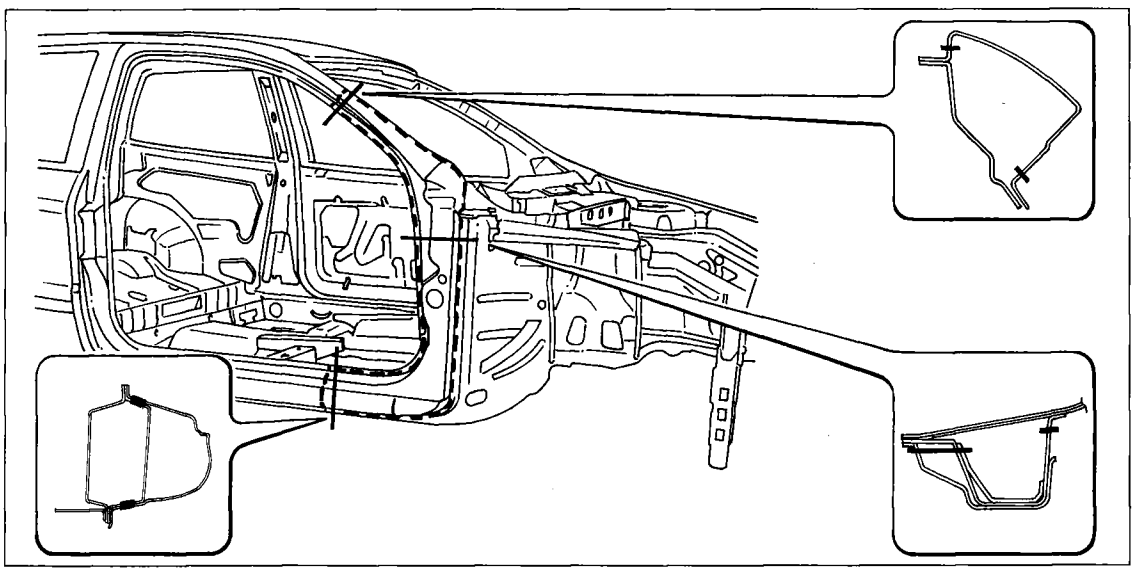

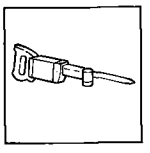

P4F06CM02

4F06CM

Preparing the edges of the bodyshell

1. Straighten any distortions to the bodyshell and prepare it as described on page 34.
2. Apply an electro-weldable anti-rust protective to the edges to be welded.

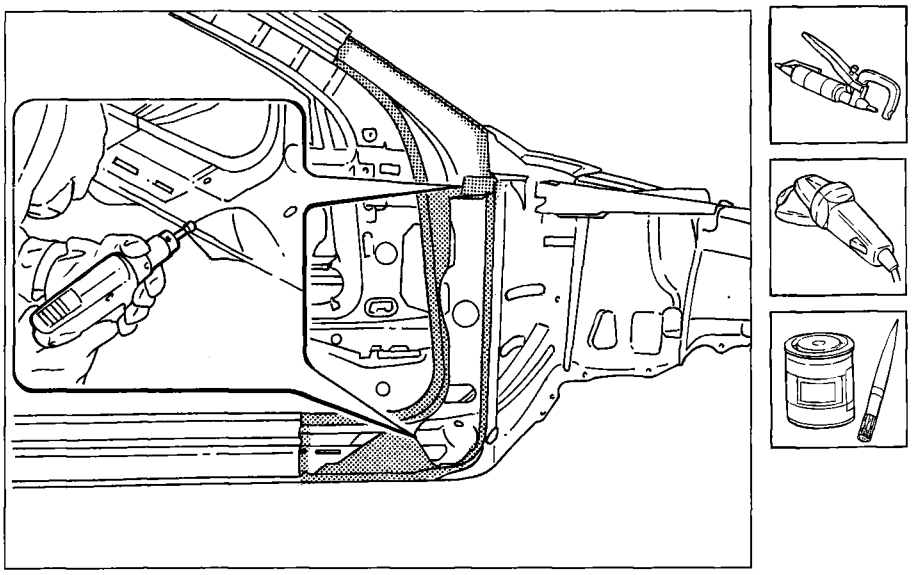

P4F07CM01

Preparing the spare part

1. Remove the excess parts from the replacement part so that the replacement pillars are 50 mm longer than the part removed from the vehicle.
2. Position the replacement part on the vehicle and check the alignment with the adjacent elements, then fix it using self-locking clamps.
3. After having ensured that it is perfectly superimposed, mark the parts to be removed on the bodyshell using a tracer point.

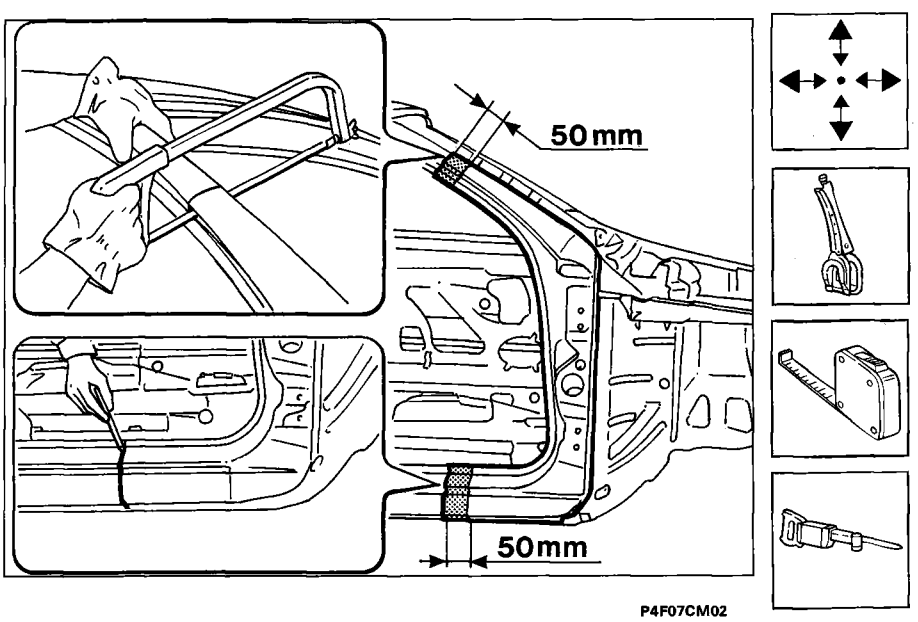

P4F07CM02

4F07CM

Copyright by Fiat Auto

Preparing the replacement parts and checking the correct positioning on the bodyshell

1. Drill the replacement part at the points where the MIG welder will be used.
2. Grind the internal and external edges.
3. Apply an electro-weldale anti-rust protective to the edges to be welded.
4. Position the replacement part on the vehicle and check the alignment with the adjacent elements.
5. Fit the hinges and the front door and check the alignment.

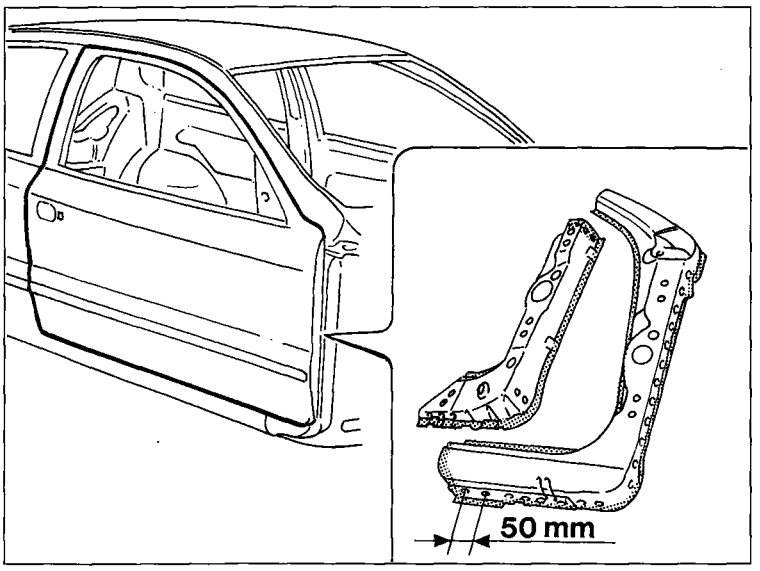

P4F08CM01

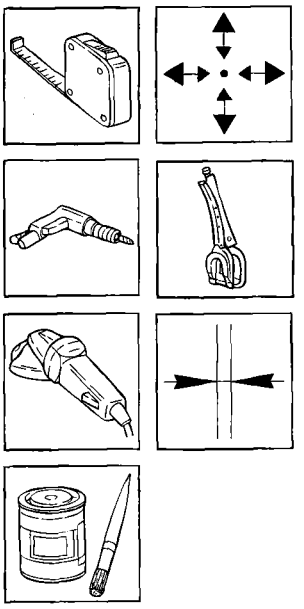

Welding replacement parts

1. Position the inner reinforcement, carry out electrical spot welding and fill the holes made previously, using the MIG welder.
2. Smooth the welds made using the MIG welder.
3. Position the pillar and carry out the electrical spot welding and fill the holes, made previously, using the MIG welder.
4. Carry out brazing along the contact edges between the replacement part and the windscreen housing.

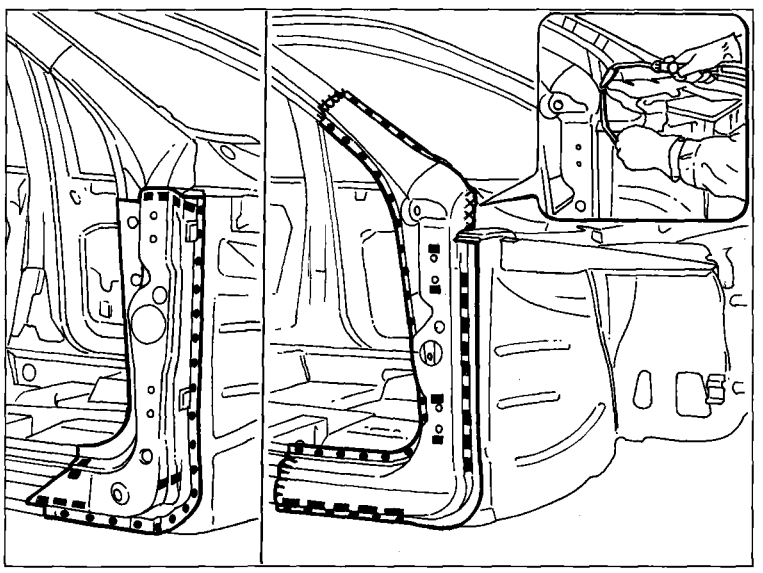

P4F08CM02

4F08CM

Finishing operations

1. Smooth the welds made using the MIG welder.

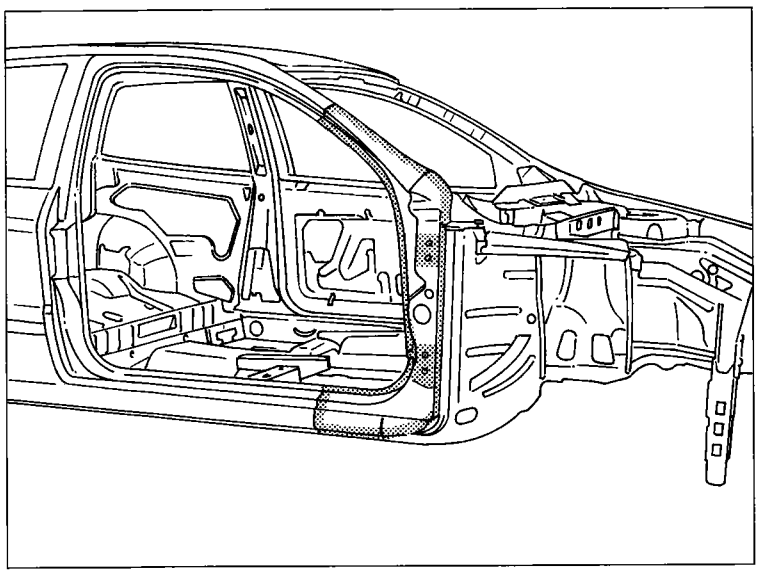

P4F09CM01

Protections

1. Refer to the previous description on pages 34-36.

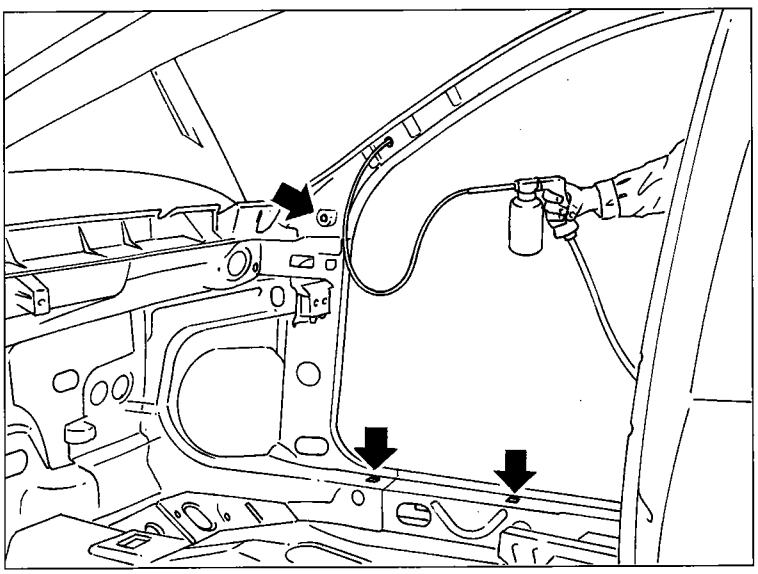

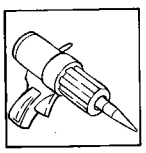

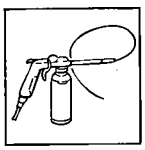

P4F09CM02

Copyright by Fiat Auto

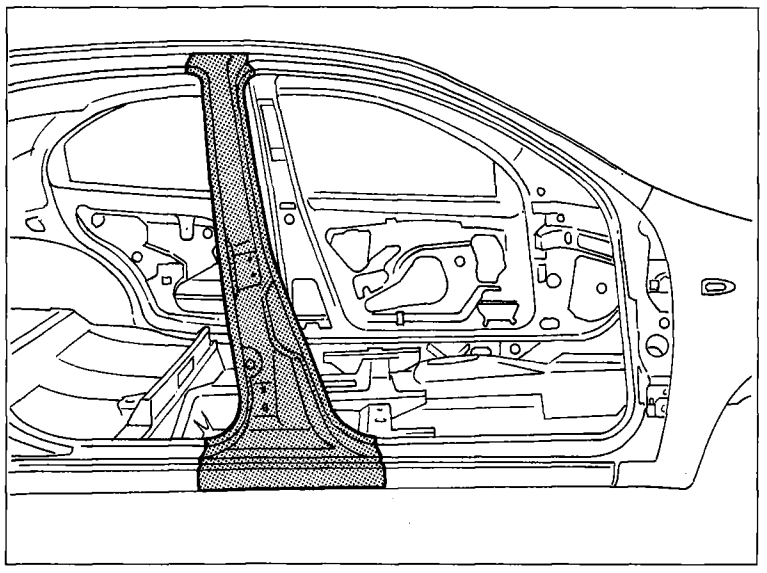

P4F10CM01

CENTRE PILLAR (7090G 40)*

Replacing

(*) This number indicates the operation code given in the Flat rate manual.

The component for which the replacement procedure is given is highlighed in the diagram at the side.

Preliminary procedures and accident prevention instructions

Refer to the description on page 33.

Preliminary dismantling

Remove the moving parts of the bodywork and interior fittings, which could impede the repair operations or be damaged during them.

Removing

Cut the component to be replaced and remove it from the vehicle.

The most important sections of the body panel are shown in order to allow the operator to adjust the position and the depth of the cutting so as not to damage the panels underneath.

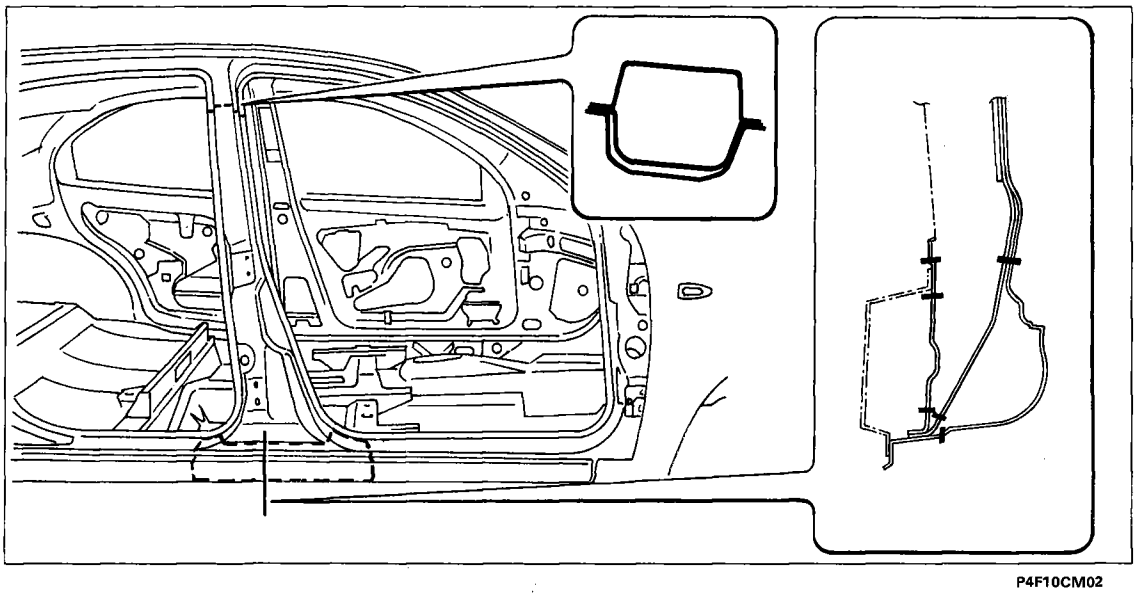

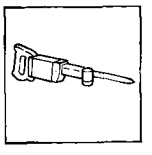

P4F10CM02

4F10CM

Preparing the edges of the bodyshell

1. Straighten any distortions to the bodyshell and prepare it as described on page 34.
2. Apply an electro-weldable anti-rust protective to the edges to be welded.

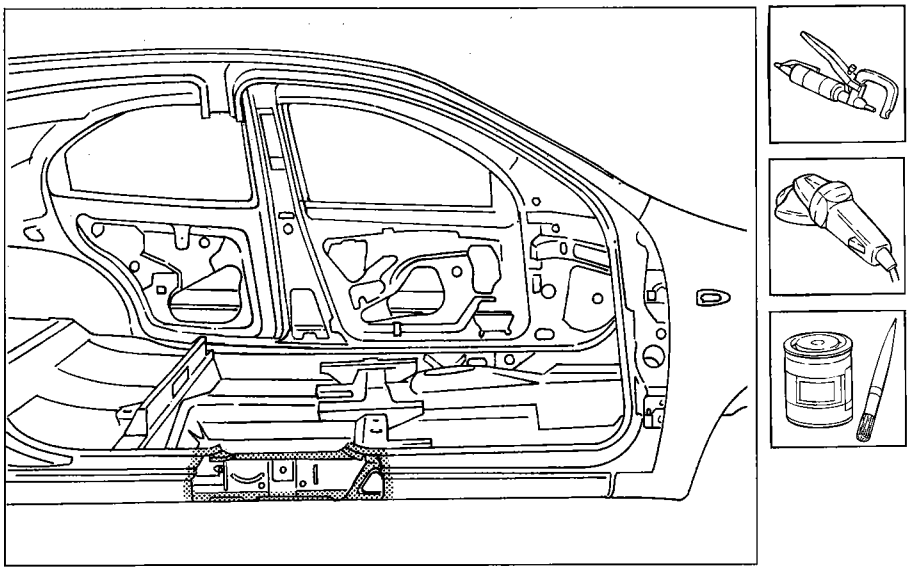

P4F11CM01

Adjusting the external centre pillar

1. Remove the excess parts from the replacement part so that the replacement pillars are about 50mm longer than the part removed from the vehicle.
2. Position the replacement part on the vehicle and check the alignment with the adjacent elements, then fix it using self-locking clamps.
3. After having made sure that it is perfectly superimposed (pillars and underdoor), mark the parts to be removed on the bodyshell using a tracer point.

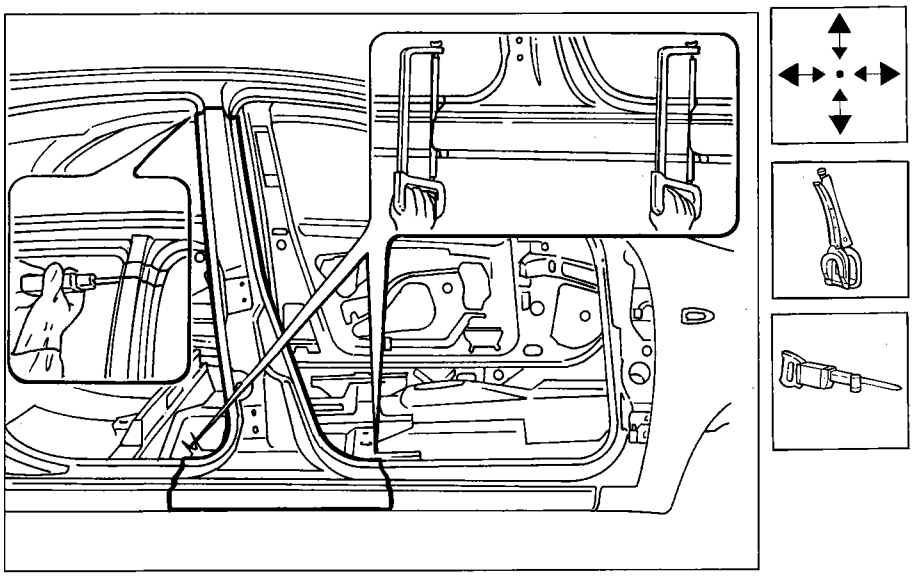

P4F11CM02

4F11CM

Copyright by Fiat Auto

70.

Preparing the replacement parts

1. Drill the replacement panel where the MIG welder will be used.
2. Grind the outer and inner edges.
3. Apply an electro-weldable anti-rust protective to the edges to be welded.

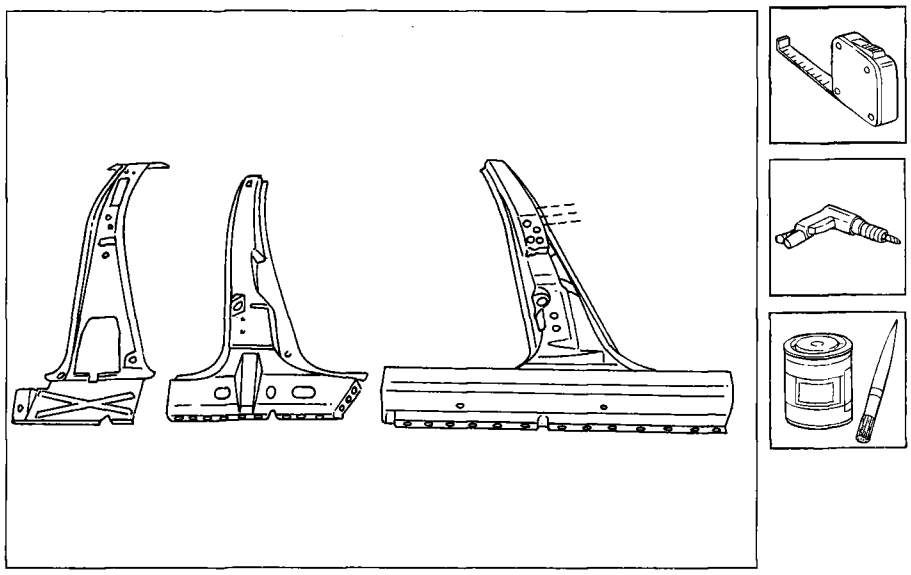

P4F12CM01

Welding replacement parts

1. Position the inner pillar and carry out MIG welding to the upper edge and fill the holes made previously.
2. Carry out the electrical spot welding.
3. Position the middle reinforcement and carry out MIG welding on the upper edge, filling the holes made previously.
4. Position the outer pillar and carry out MIG welding on the outer edges filling the holes made previously.

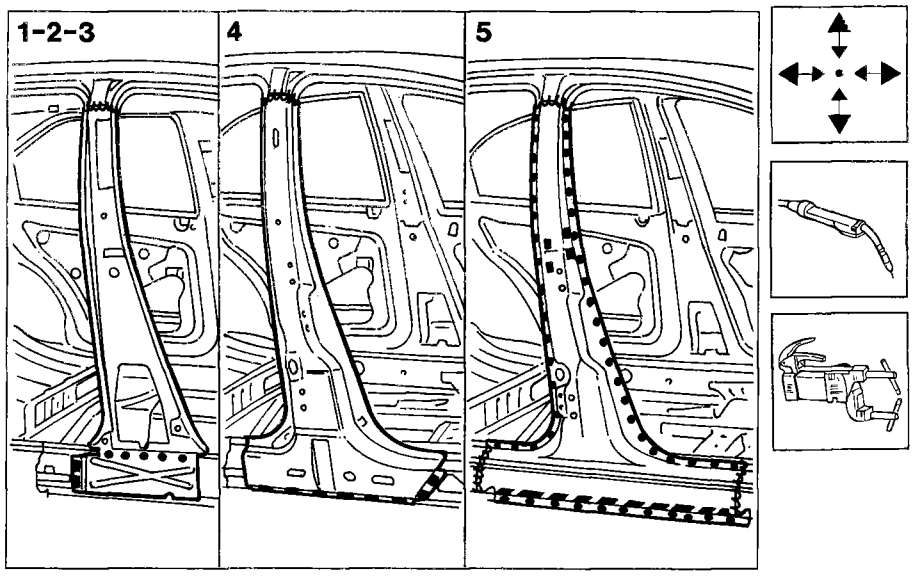

P4F12CM02

Before the final welding, check that the door housing measurements are correct. (see page 23 and page 25).

4F12CM

Finishing operations

Smooth the welds made using the MIG welder.

Protections

Refer to the previous description on pages 34-36.

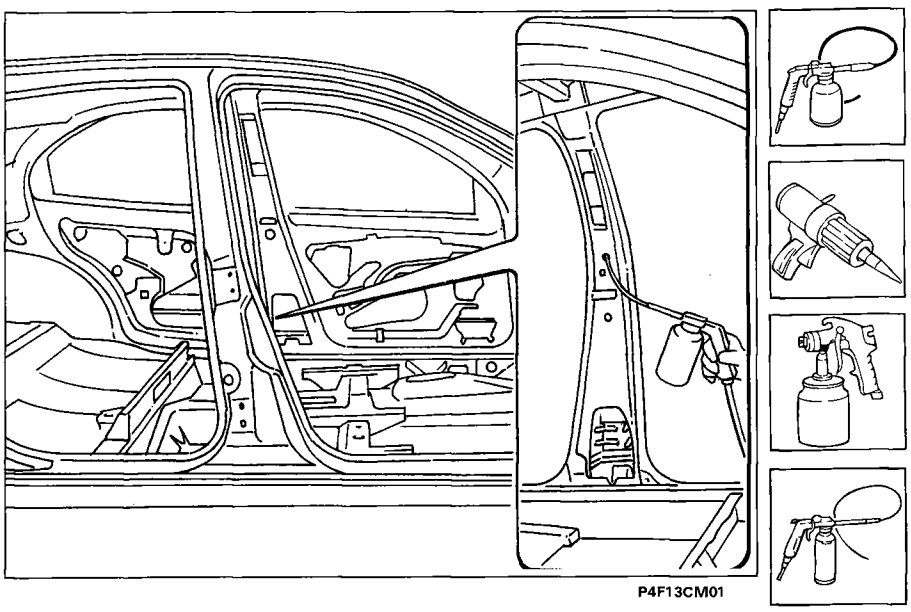

Copyright by Fiat Auto

page

BUMPERS
- Removing-refitting front bumper 1
- Removing-refitting rear bumper (Marea) 2
- Removing-refitting folding rear bumper (Marea Weekend) 3
- Removing-refitting folding rear bumper outer cover (Marea Weekend) 3
- Removing-refitting side rear bumper (Marea Weekend) 4

FRONT DOOR
- Removing-refitting door 5
- Adjustments 5
- General view of removing front door 6
- Removing-refitting door panel and protective cover 7
- Removing-refitting outer door handle 8
- Replacing door lock barrel 8
- Removing-refitting door lock 9
- Removing-refitting door opening lever 9
- Removing-refitting lowering window glass 10
- Removing-refitting window opening device 10
- Removing-refitting external rear view mirror (electrical) 11
- Removing-refitting external rear view mirror (manual) 12
- Removing-refitting external rear view mirror (manual) 12
- Removing-refitting door seal 13
- Removing-refitting door rear pillar trim 13

REAR DOOR
- Removing-refitting door panel and protective cover 14
- Removing-refitting fixed window glass 15
- Removing-refitting lowering window glass 15
- Removing-refitting manual window opening device 16
- Removing-refitting electric window opening device 16

BONNET LID
- Removing-refitting bonnet lid 17
- Adjustments 17
- Removing-refitting bonnet lid release cable 18
- Removing-refitting engine compartment lock striker 19
- Removing-refitting windscreen washer pipes 19
- Removing-refitting front grille 19

BOOT LID (Marea)
- Removing-refitting boot lid 20
- Adjustments 21
- Removing-refitting boot lid lock 22
- Replacing lock barrel 22
- Removing-refitting bonnet lid release cable 23
- Removing-refitting rear number plate holder 26

page

REAR TAILGATE (Marea Weekend)
- Removing-refitting rear tailgate 29
- Adjustments 30
- Removing-refitting interior fittings for rear tailgate 31
- Removing-refitting idler for rear tailgate locks 32
- Removing-refitting rear tailgate locks 32
- Removing-refitting rear bumper opening mechanism 33
- Removing-refitting folding rear bumper locks 33
- Removing-refitting no. plate light holder and lock 35
- Replacing rear tailgate lock barrel 35

SEATS
- Removing-refitting front seat 36
- Dismantling-reassembling front seat 37
- Removing-refitting rear seat (Marea) 40
- Removing-refitting rear seat (Marea Weekend) 41

INTERIOR FITTINGS
- Removing-refitting sun visors 42
- Removing-refitting front pillar cover 42
- Removing-refitting front/rear passenger grab handles 42
- Removing-refitting roof lining front fixing covers 42
- Removing-refitting centre pillar cover 43
- Removing-refitting rear parcel shelf (Marea) 44
- Removing-refitting rear pillar cover (Marea) 44
- Removing-refitting luggage compartment side lining (Marea Weekend) 45
- Removing-refitting upper luggage compartment covering (Marea Weekend) 45
- Removing-refitting luggage compartment pillars cover (Marea Weekend) 46
- Removing-refitting rear seat side cover (Marea Weekend) 46
- Removing-refitting roof lining (Marea) 47
- Removing-refitting roof lining (Marea Weekend) 50
- General view of dashboard 51
- Removing-refitting dashboard 53
- Removing-refitting rear air vent 60
- Removing-refitting tunnel cover armrest 60
- Removing-refitting tunnel cover pocket 60
- Removing-refitting front seat belts 61
- Removing-refitting rear seat belts (Marea) 62
- Removing-refitting rear seat belts (Marea Weekend) 62

Cont' ☞

Copyright by Fiat Auto

page

- Mechanical seat belt pre-tensioners 62/1

EXTERIOR FITTINGS
- Removing-refitting exterior side rubbing strips 63
- Removing-refitting side trims on roof panel (Marea) 65
- Removing-refitting side trims on roof panel (Marea Weekend) 66
- Removing-refitting roof rail (Marea Weekend) 67

SUN ROOF
- Introduction 69
- Removing-refitting complete roof 72
- Dismantling-reassembling complete sun roof 73
- Adjustments during refitting 74

WINDOW GLASSES
- Stuck window glasses 75
- Tools 75
- Replacing front window glass (windscreen) 79
- Replacing rear window glass (rearscreen) (Marea) 83
- Replacing rear window glass (rearscreen) (Marea Weekend) 85
- Replacing rear fixed side window glass (Marea Weekend) 87

Fiat Auto S.p.A.

D.M.C. - M.P.S.
Servizi Post Vendita - Assistenza Tecnica
10040 Volvera TO - (Italia) - Largo Senatore G. Agnelli, 5
Print no. 506.763/02 – Agosto 1996 - 750
Printed in Italy - Tip. Pozzo Gros Monti - Moncalieri (TO)
N. ordinazione 60444763

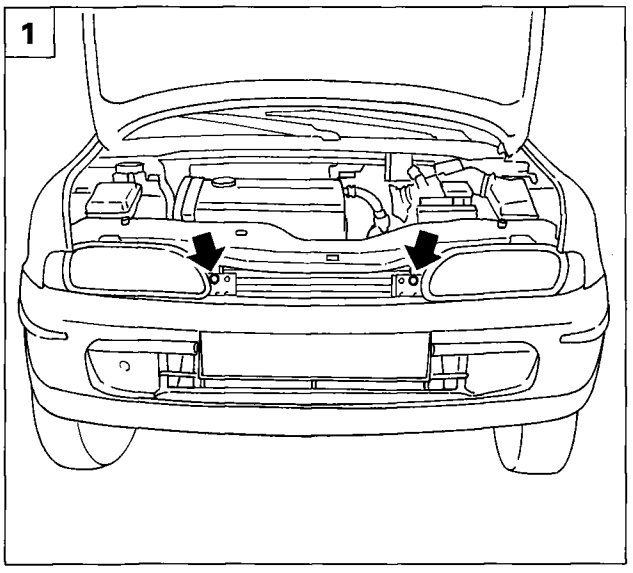

P4F001M01

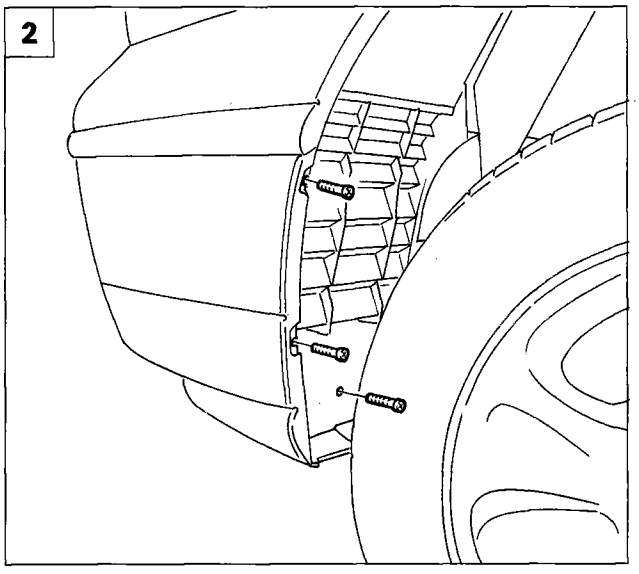

P4F001M02

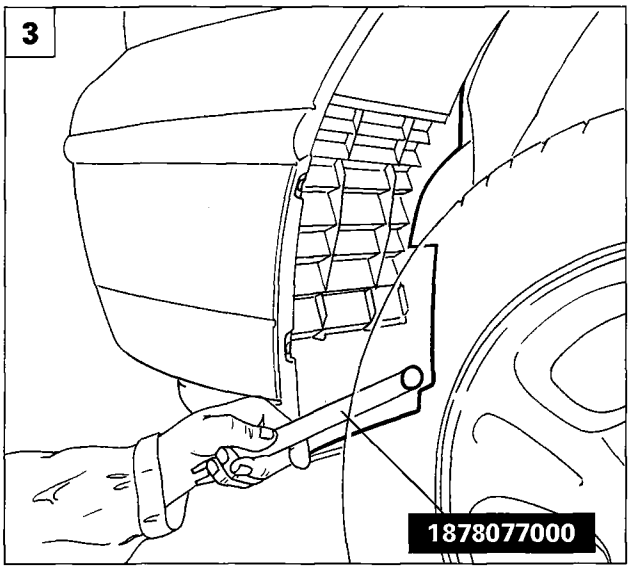

P4F001M03

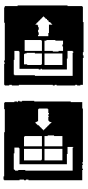

REMOVING-REFITTING FRONT BUMPER

1. Raise the bonnet lid, then undo the upper bolts fixing the bumpers to the front cross member cover.
2. Undo the bolts fixing the front wheel arch liner.
3. Using tool 1878077000, remove the button fixing and extract the front wheel arch liner.
4. Undo the bolts fixing the bumpers to the front wing.
5. Remove the front bumper from the bodyshell, undoing the lower fixing bolts shown by the arrows.

NOTE *To refit, simply reverse the order of the operations carried out for the removal.*

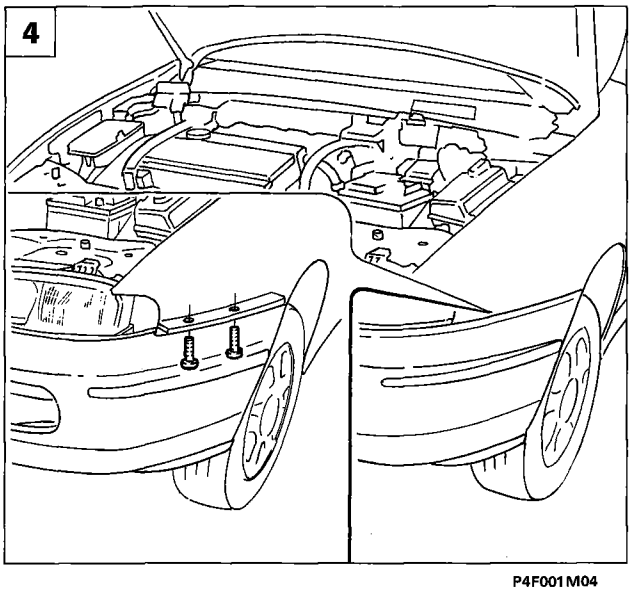

P4F001M04

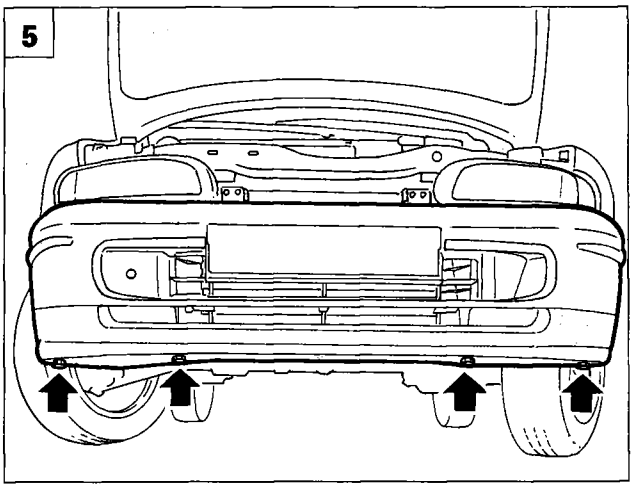

P4F001M05

Copyright by Fiat Auto

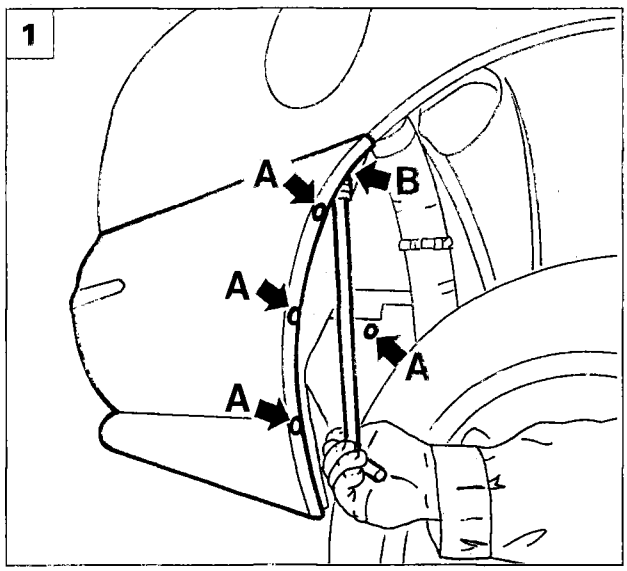

P4F002M01

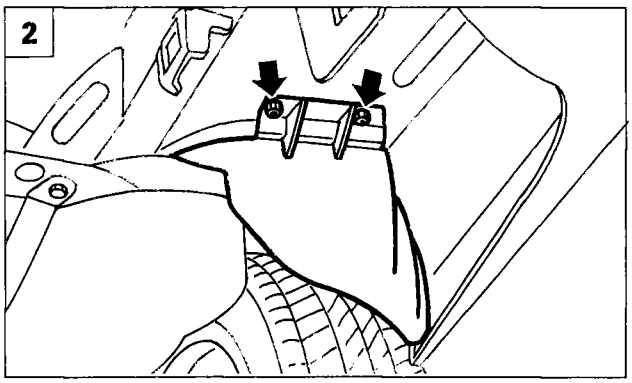

P4F002M02

REMOVING-REFITTING REAR BUMPER

1. Undo the bolts (A) fixing the bumpers to the wheel arch liner.
   Undo the bolt (B) fixing the bumpers to the rear wing.
2. Remove the wheel arch liner, undoing the fixing nuts.
3. Remove the luggage compartment floor covering (A).
   Undo the bolts fixing the rear luggage compartment protection, then remove the protection.
4. Undo the fixing bolts and release the buttons for the luggage compartment side lining, then remove it.
   Undo the bolt (A) fixing the bumper to the bodyshell.
5. Undo the bolts fixing the bumpers to the bodyshell. Remove the bumpers.

NOTE *To refit simply reverse the order of the operations carried out for the removal.*

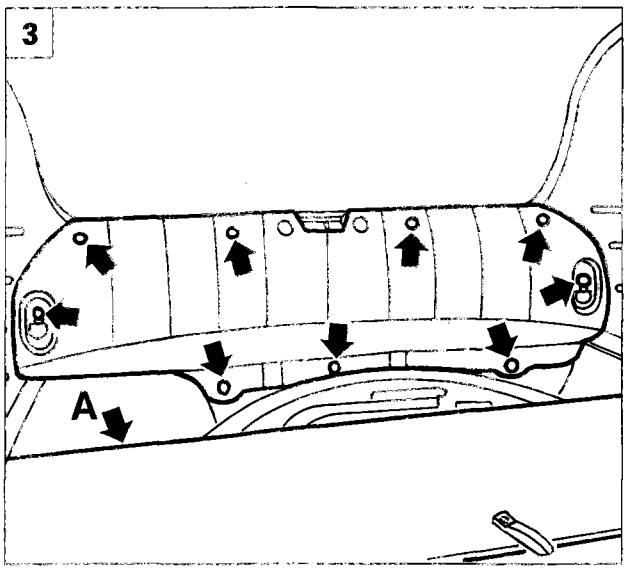

P4F024M04

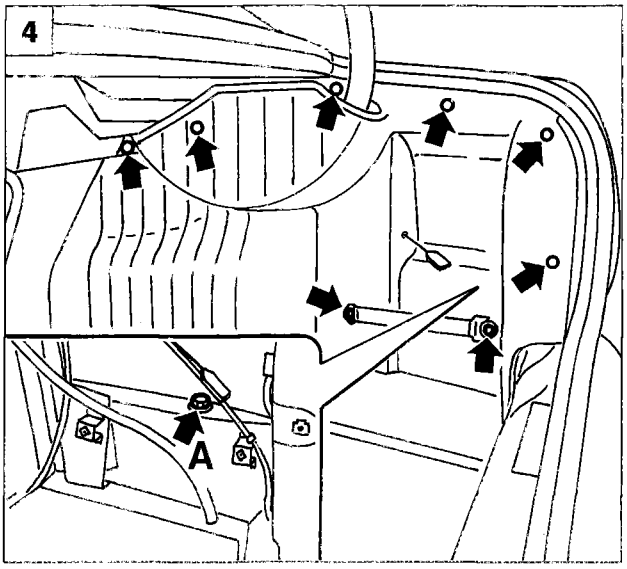

P4F002M03

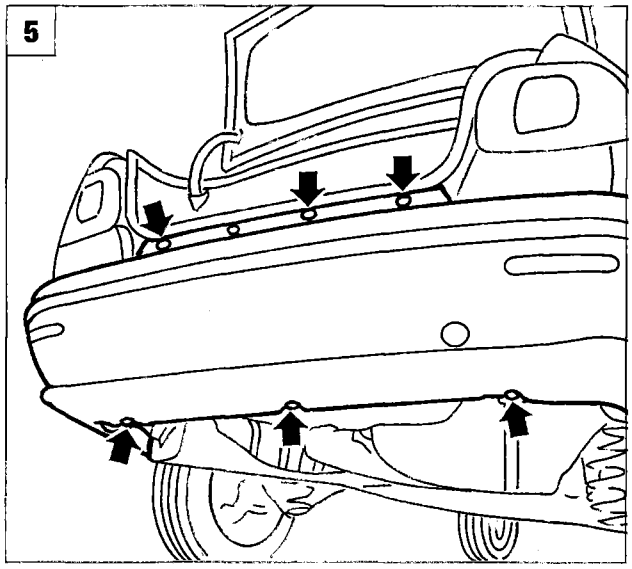

P4F002M04

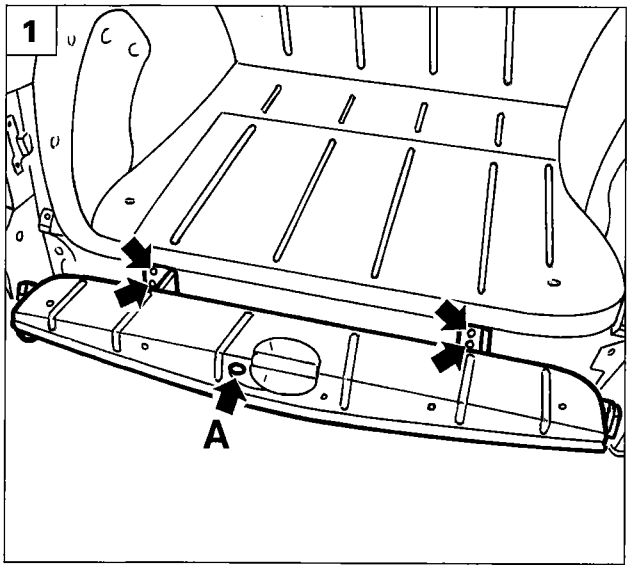

P4F003M01

REMOVING-REFITTING REAR FOLDING BUMPER

1. Acting on the button (A), lower the bumper.
- Undo the bolts shown fixing the hinges and remove the folding rear bumper.

Adjusting position of folding rear bumper

2. Loosen the bolts fixing the hinges, then adjust the position of the folding rear bumper.

NOTE *The arrows indicate the possible movements for the adjustment.*

- When the adjustment has been carried out, fully tighten the hinge fixing bolts.

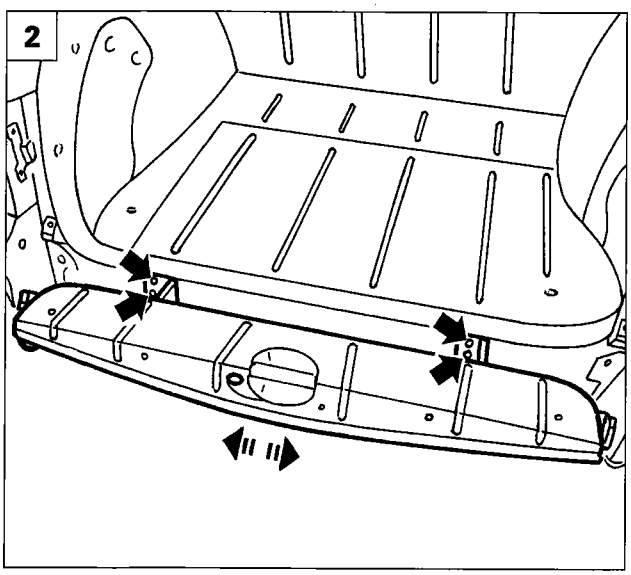

P4F003M02

REMOVING-REFITTING FOLDING REAR BUMPER OUTER COVER

3. Open the rear tailgate and undo the bolts shown.
4. Undo the bolts shown and remove the folding rear bumper outer cover.

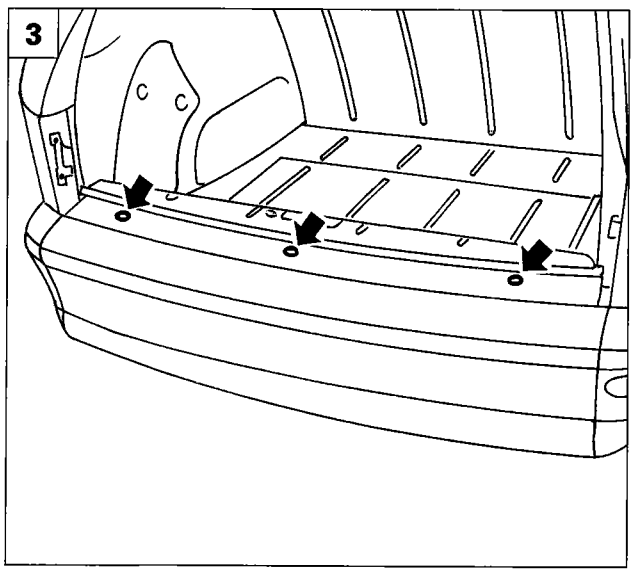

P4F003M03

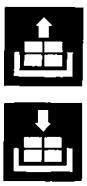

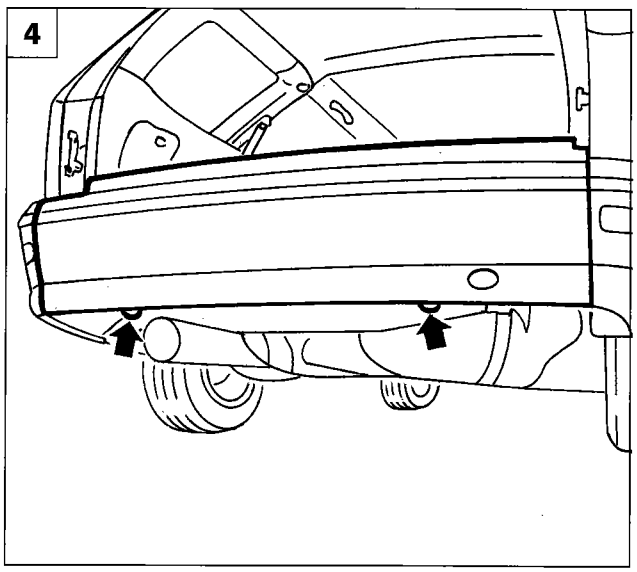

P4F003M04

Copyright by Fiat Auto

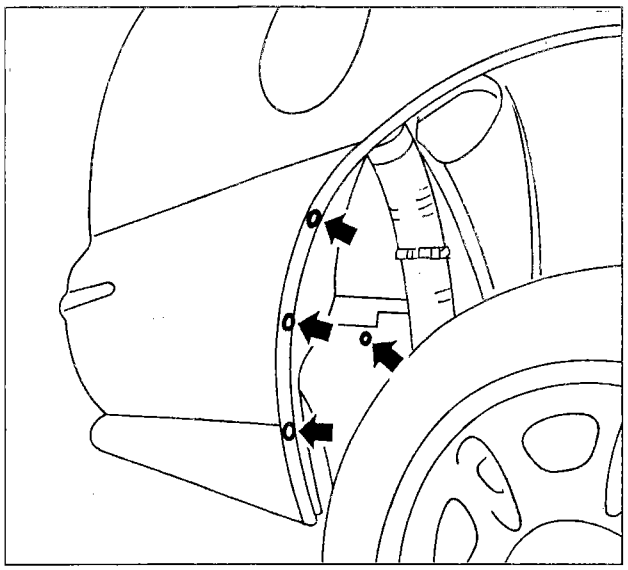

P4F004M01

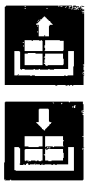

REMOVING-REFITTING SIDE REAR BUMPER

- Undo the bolts fixing the bumper to the wheel arch linder.

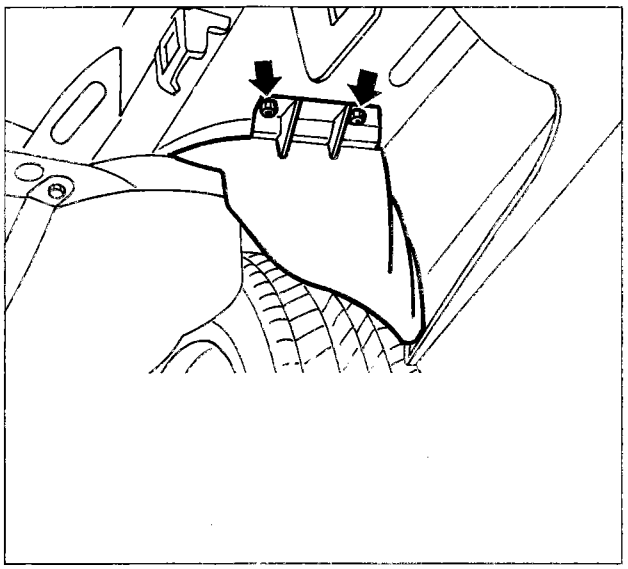

P4F002M02

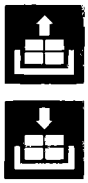

- Remove the wheel arch liner, undoing the fixing nuts.

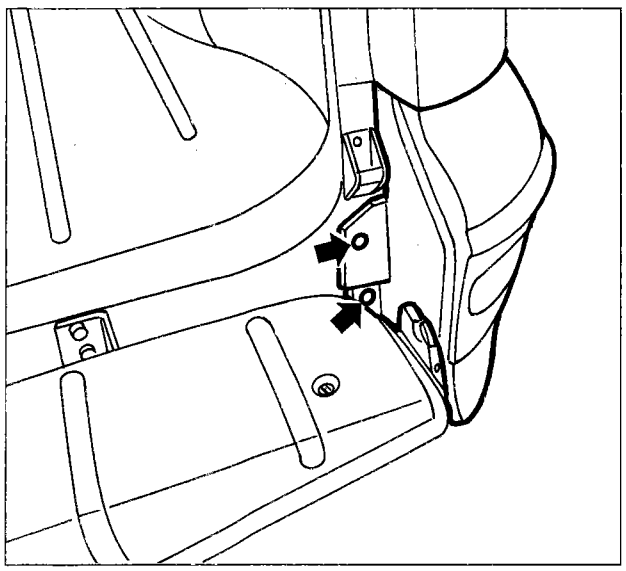

P4F004M02

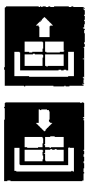

- Lower the rear bumper; undo the bolts shown and remove the side section of the rear bumper.

NOTE *To refit, simply reverse the order of the operations carried out for the removal.*

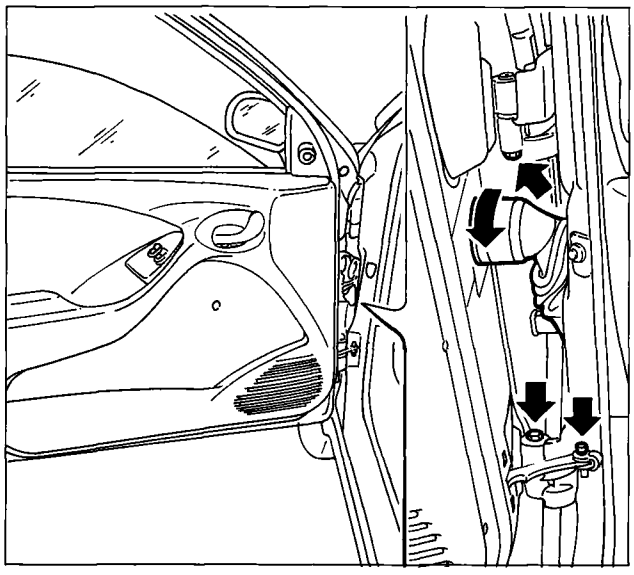

P4F005M01

REMOVING-REFITTING DOOR

- Disconnect the supply connector for the electrical devices for the door;
- remove the flexible pin for the door check strap, using tool 1878081000;
- remove the door after having undone the fixing bolts shown;

NOTE *To refit, simply reverse the order of the operations carried out for the removal, tightening the bolts fixing the door hinges to the recommended torque (1.5 daNm).*

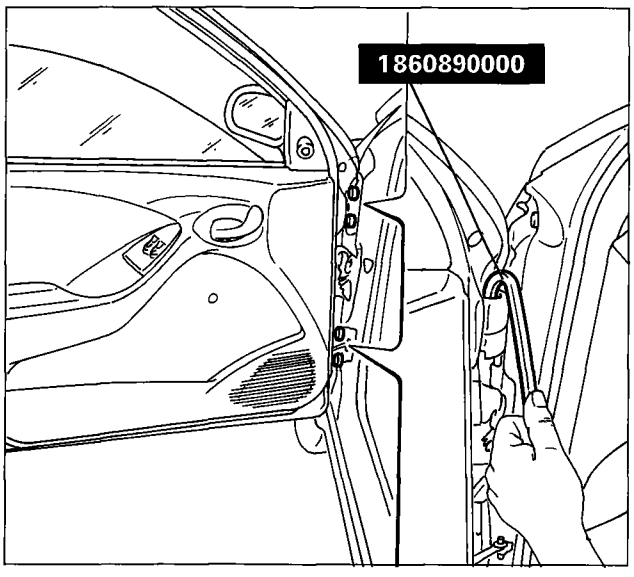

P4F005M02

ADJUSTMENTS

Adjusting front door

- Loosen the nuts fixing the hinge to the door, using tool 1860890000.
- adjust the position of the door;
- when the adjustment has been carried out, tighten the nuts fixing the hinge to the door to the recommended torque (4.5 daNm).

NOTE *The arrows indicate the possible movements for the adjustment.*

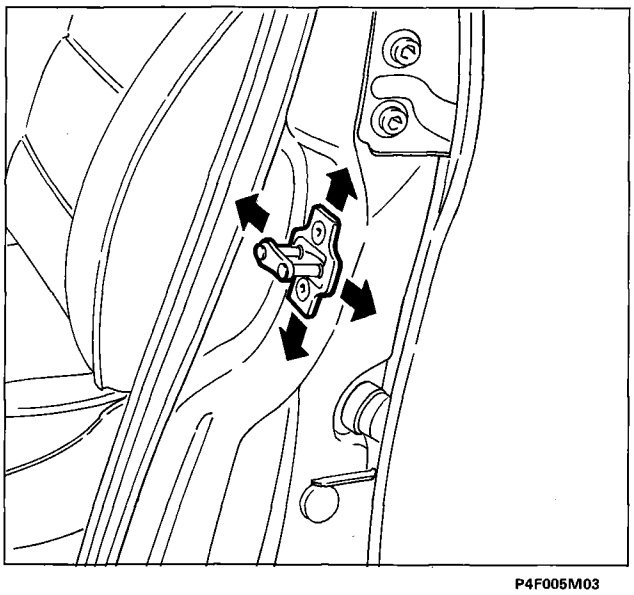

P4F005M03

Adjusting position of door lock striker

- Loosen the bolts fixing the striker and adjust its position;
- when the adjustment has been carried out, fully tighten the bolts fixing the striker.

NOTE *The arrows indicate the possible movements for the adjustment.*

Copyright by Fiat Auto

70.

GENERAL VIEW Removing front door

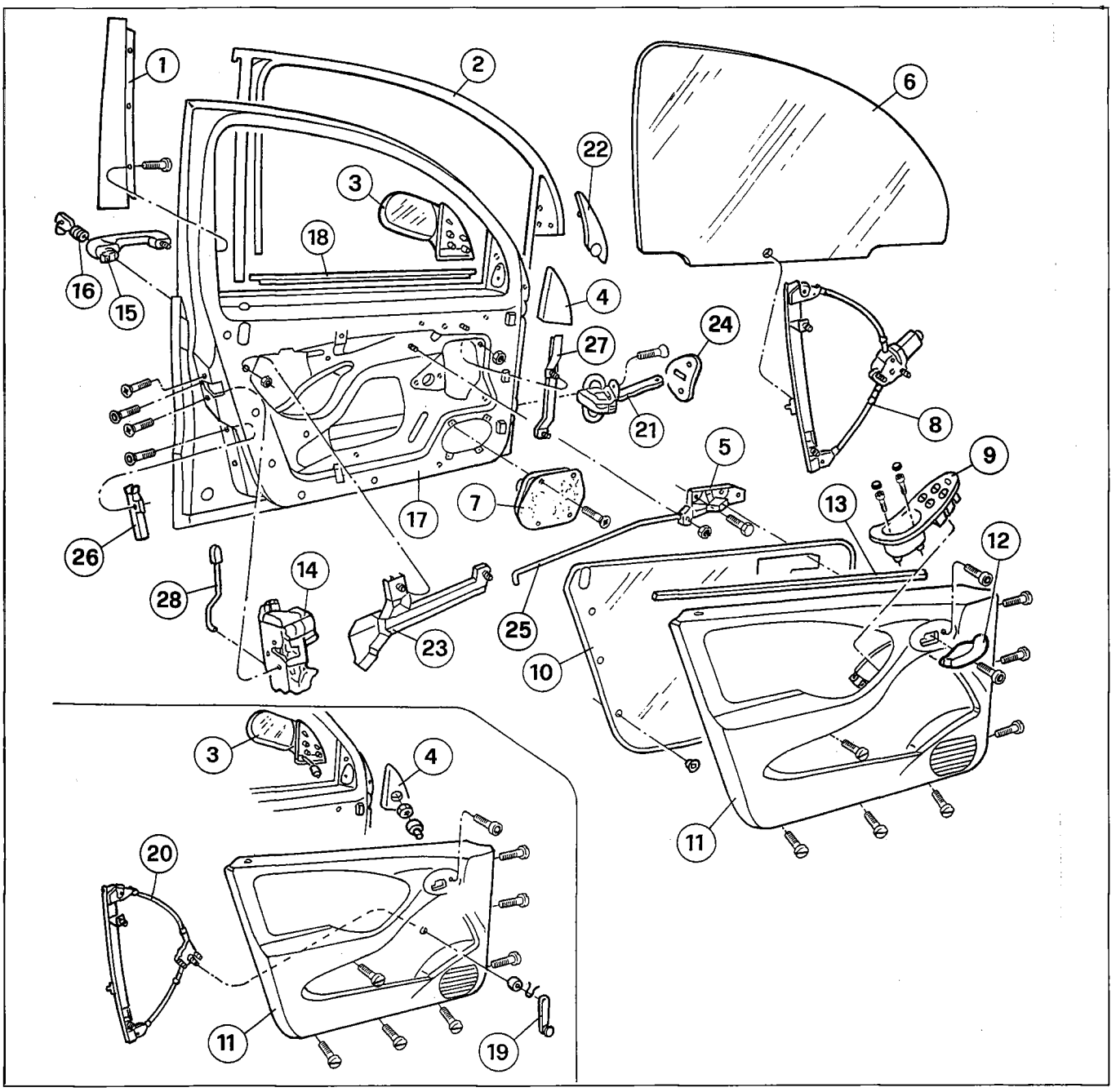

P4F006M01

1. Rear pillar trim
2. Finishing seal
3. External rear view mirror
4. Trim
5. Door opening lever
6. Lowering window glass
7. Speaker
8. Electric window opening device
9. Electric windows button
10. Protective door lining
11. Door panel
12. Inner door opening lever
13. Internal glass scraper trim
14. Door lock
15. Outer door handle
16. Door lock barrel
17. Door structure
18. Outer glass scraper trim
19. Window opening crank
20. Manual window opening device
21. Door rod
22. Inner seal
23. Door opening rod protection
24. Door rod seal
25. Lock rod
26. Rear window guide
27. Front window guide
28. Safety rod

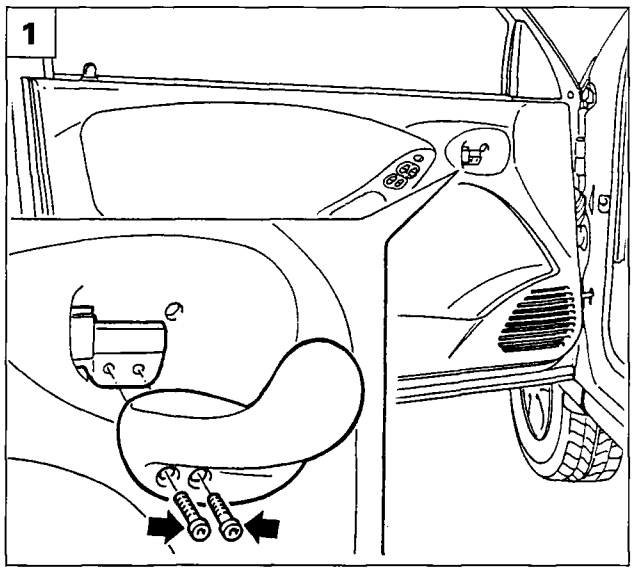

P4F007M01

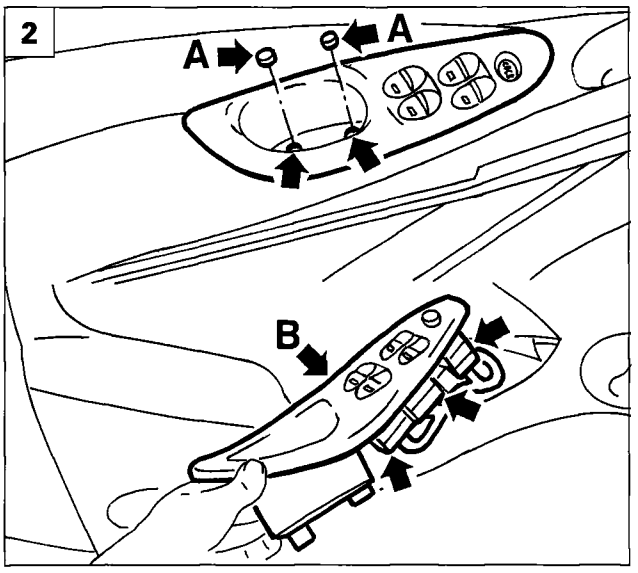

P4F007M02

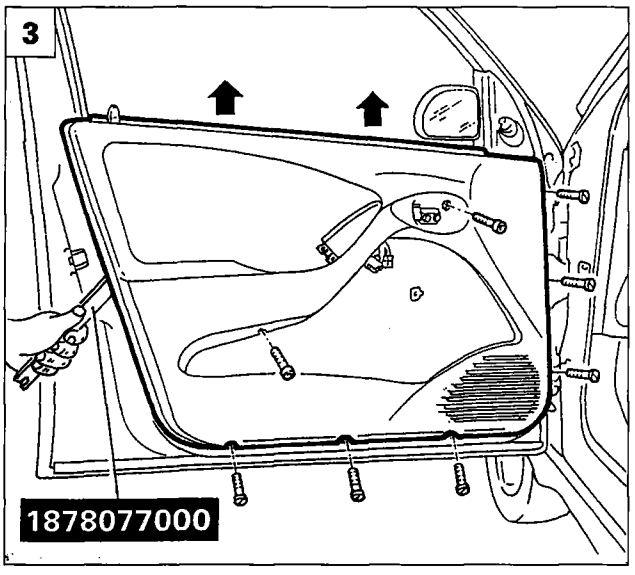

P4F007M03

REMOVING-REFITTING DOOR PANEL AND PROTECTIVE COVER

1. Remove the door opening control lever by undoing the fixing bolts shown.
2. Release the caps (A) for the electric windows panel, then undo the bolts underneath.
   Remove the electric windows panel (B) and remove it gently, then disconnect the appropriate connections.
3. Remove the door panel, undoing the fixing bolts shown in the diagram and removing the fixing buttons using tool 1878077000.
4. Using tool 1878077000, remove the fixing buttons shown, extract the side blocks from the door, rotating them as illustrated in the diagram.
5. Remove the protective door lining.

NOTE *To refit, simply reverse the order of the operations carried out for the removal.*

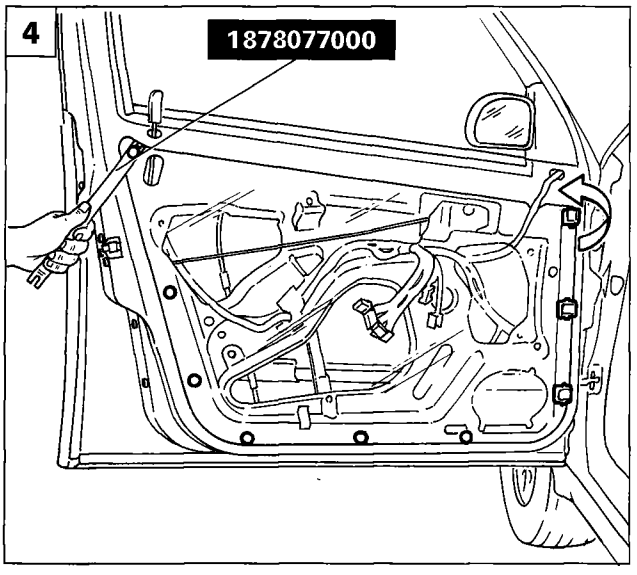

P4F02AM04

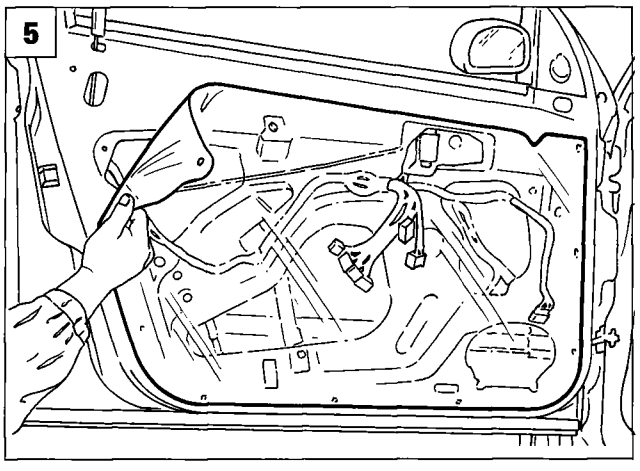

P4F007M04

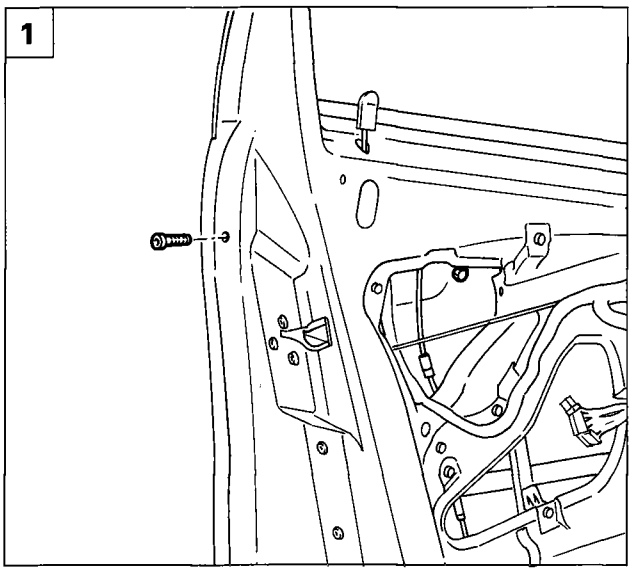

P4F03AM01

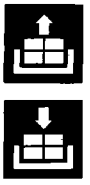

REMOVING-REFITTING OUTER DOOR HANDLE

Remove the door panel as described on the previous page.

1. Undo the bolt and the nut fixing the handle to the door.
2. With the handle in the open position, disconnect the opening control rods, releasing them from the appropriate attachments points, then remove the handle.

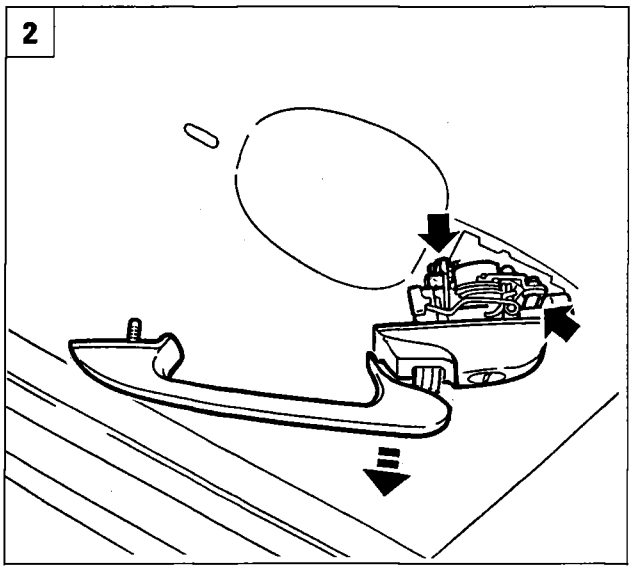

P4F03AM02

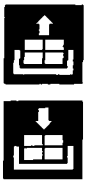

NOTE *To refit simply reverse the order of the operations carried out for the removal, fixing the bolt and nut in order.*

REPLACING DOOR LOCK BARREL

3. Remove the door handle, following the instructions given above; insert the key in the lock barrel, then remove the fixing spring.
4. Extract the lock barrel.

NOTE *When refitting, suitably reverse the order of the operations carried out for the removal.*

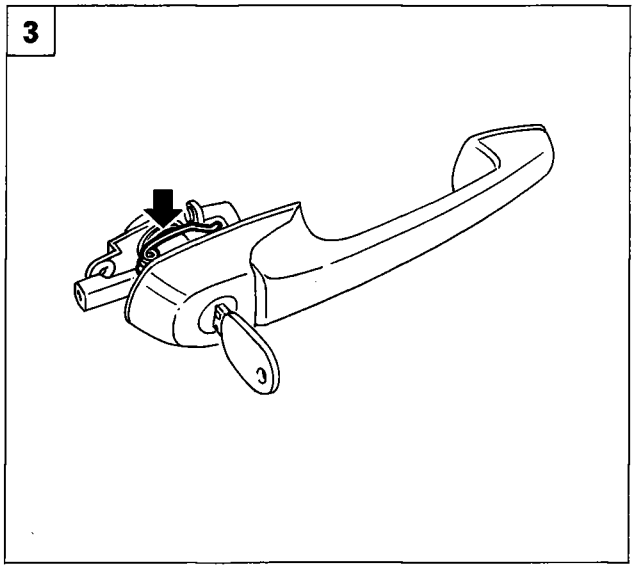

P4F03AM03

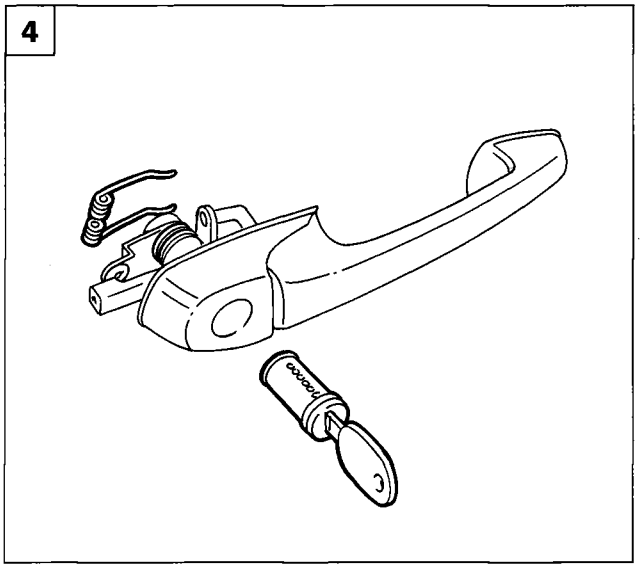

P4F03AM04

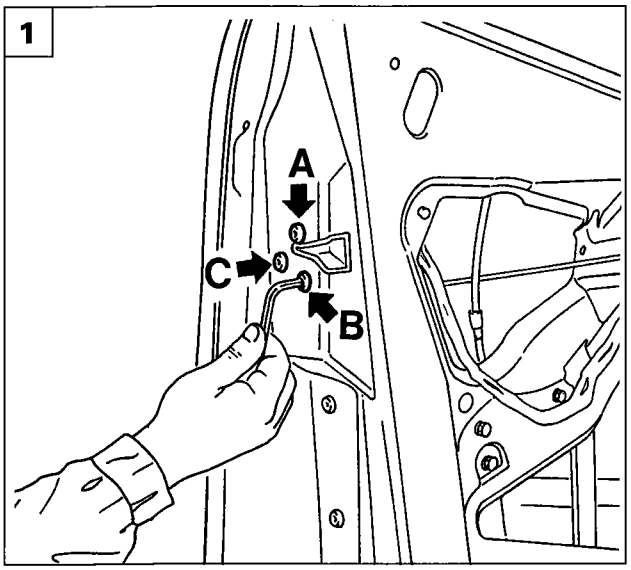

P4F04AM01

REMOVING-REFITTING DOOR LOCK

Remove the outer handle for the door following the instructions on the previous page.

1. Undo the bolts fixing the lock to the door (A, B and C).
2. Remove the lock from the door disconnecting the connectors shown by the arrows and door opening control rod.

NOTE *To refit simply reverse the order of the operations carried out for the removal, tightening bolts A, B and C in order.*

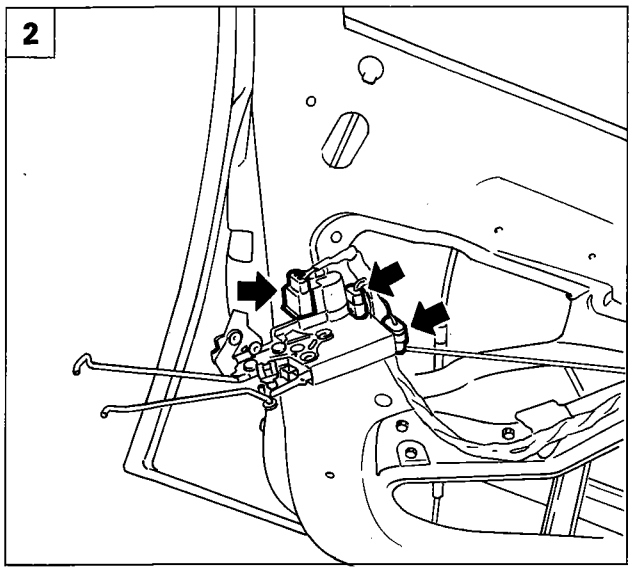

P4F04AM02

REMOVING-REFITTING DOOR OPENING LEVER

Remove the door panel following the instructions given on the previous pages.

3. Undo the nuts fixing the door opening control lever.
4. Remove the control lever from its housing releasing it from the lock operating rod.

NOTE *To refit simply reverse the order of the operations carried out for the removal.*

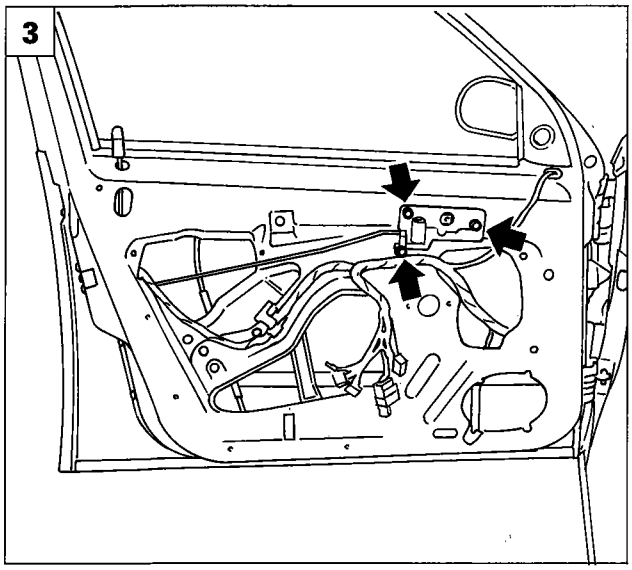

P4F04AM03

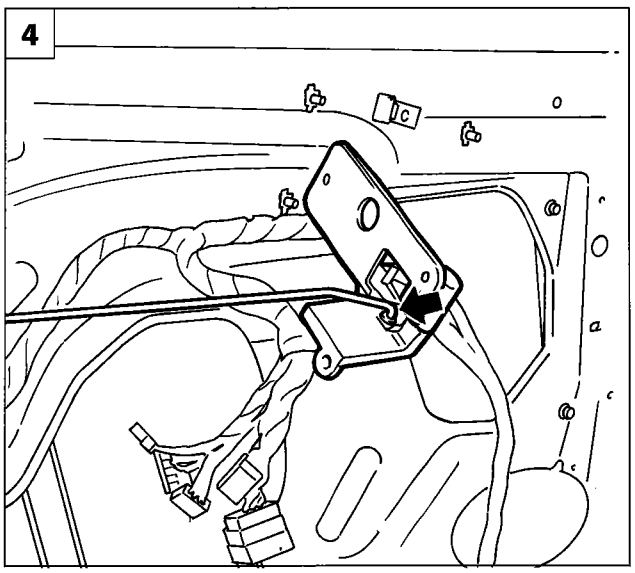

P4F04AM04

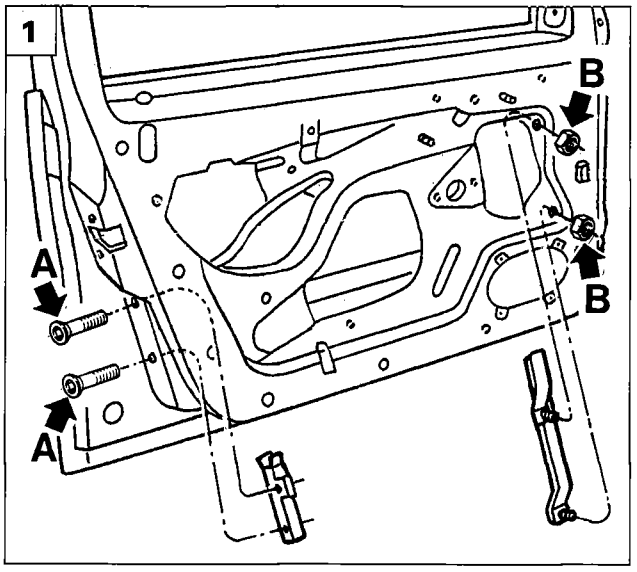

P4F010M01

REMOVING-REFITTING LOWERING WINDOW GLASS

- Remove the door panel and protective cover as described on the previous pages.
- Remove the external rear view mirror, as described on the pages which follow.
- Remove the outer glass scraper trim.

1. Completely raise the window.
   Undo the bolts (A) then remove the rear window guide.
   Undo the bolts (B) then remove the front window guide.
2. Release the window from its fixing device.

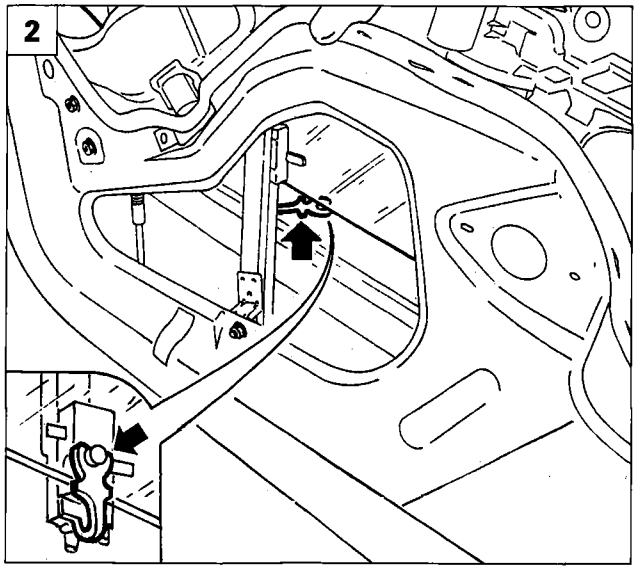

P4F05AM01

- Extract the window from its housing.

REMOVING-REFITTING WINDOW OPENING DEVICE

3. Release the window from its device as described above, then undo the bolts fixing the window opening device to the door.
4. Extract the window opening device from its housing.

NOTE *To refit simply reverse the order of the operations carried out for the removal.*

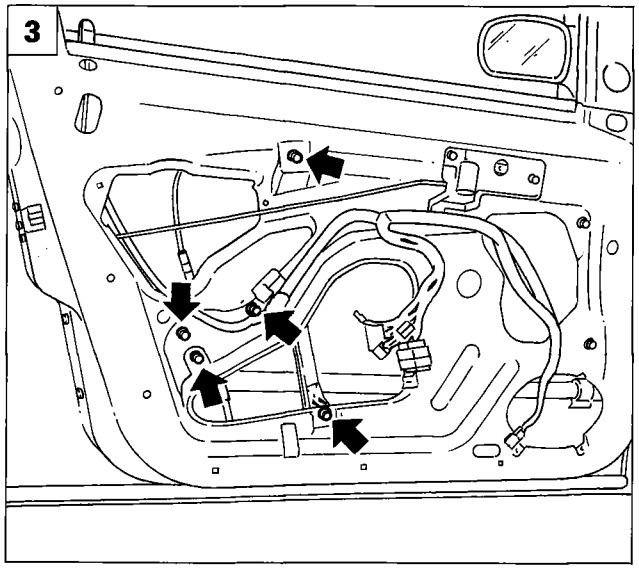

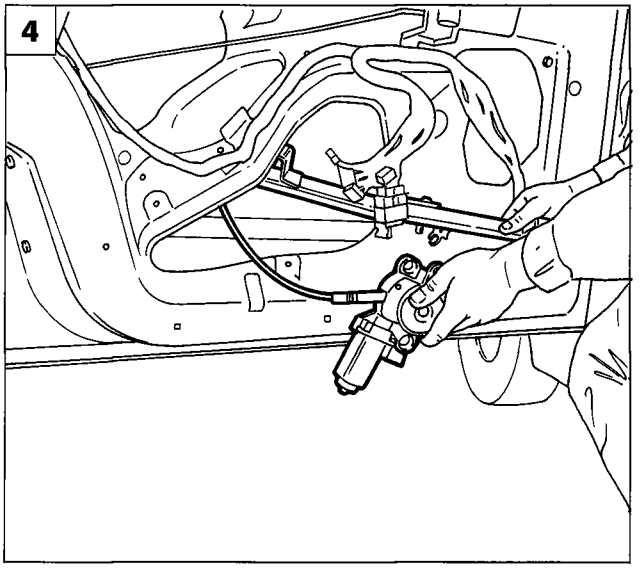

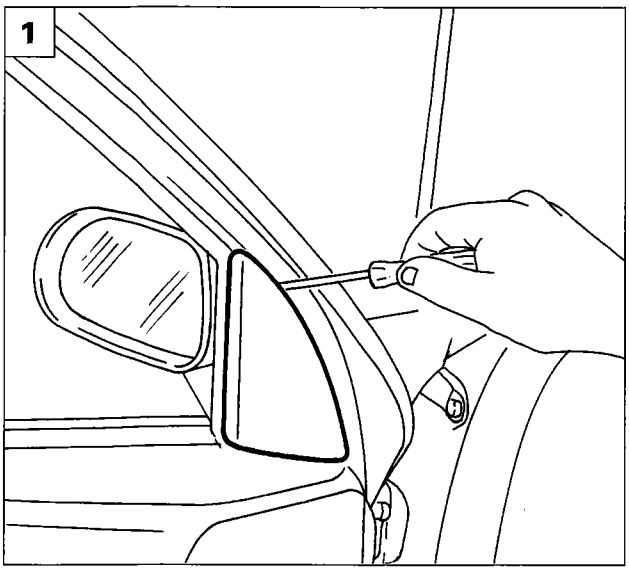

P4F011M01

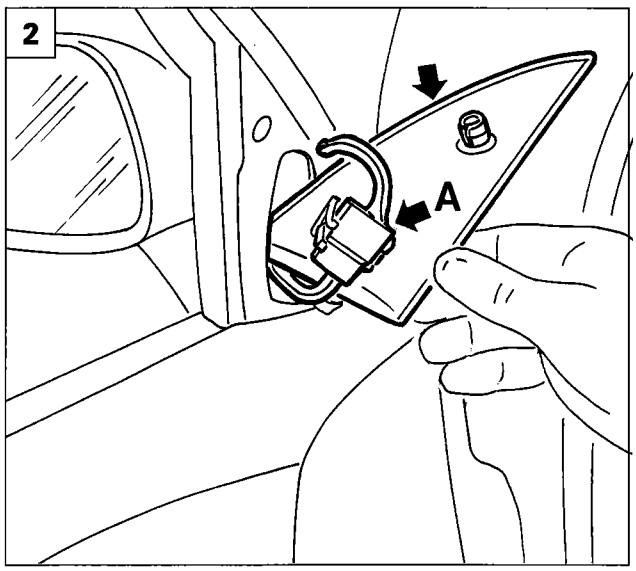

P4F011M02

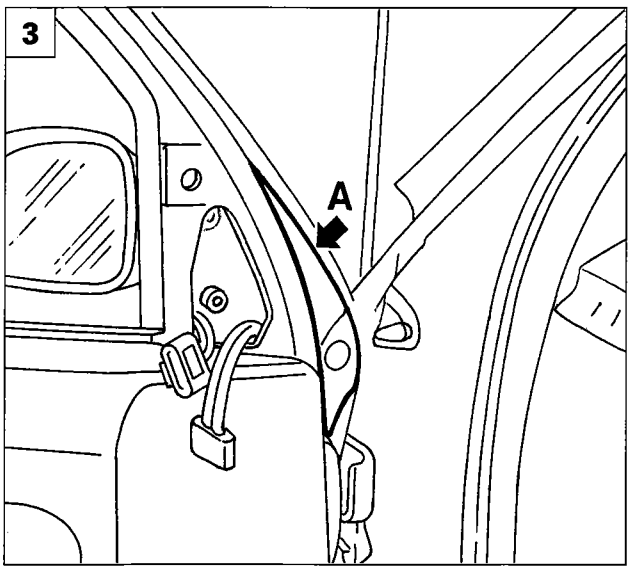

P4F011M03

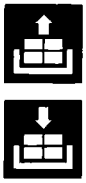

REMOVING-REFITTING EXTERNAL REAR VIEW MIRROR (electric)

1. Gently remove the mirror fixing cover trim, acting on the retaining tabs.
2. Disconnect the electrical connector (A), then remove the trim.
3. Release the rubber protection (A).
4. Undo the bolts fixing the mirror to the bodyshell.
5. Remove the external rear view mirror complete with plastic trim.

NOTE *To refit simply reverse the order of the operations carried out for the removal.*

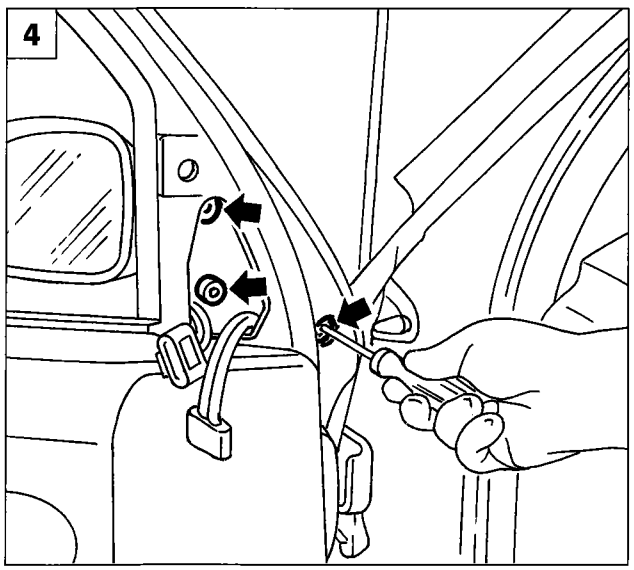

P4F011M04

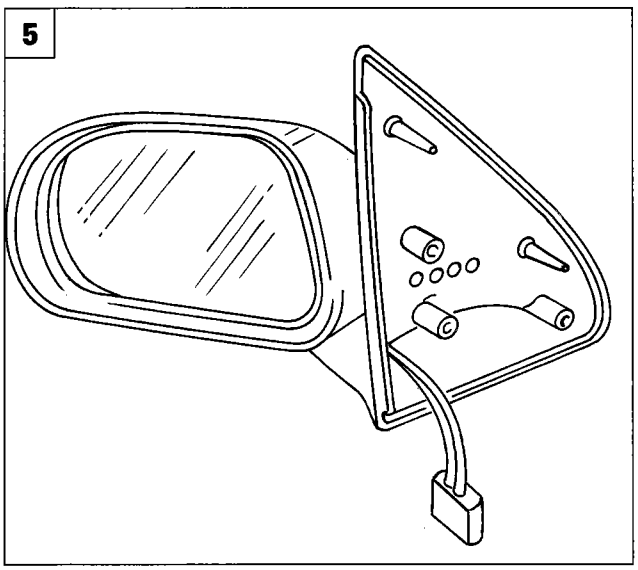

P4F011M05

Copyright by Fiat Auto

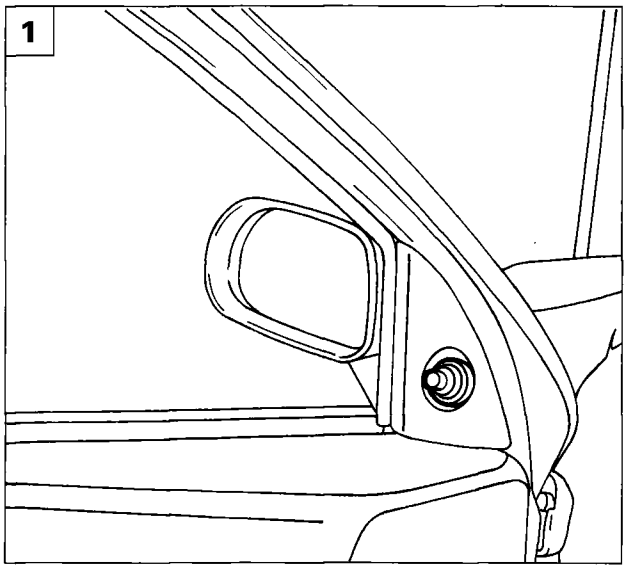

P4F06AM01

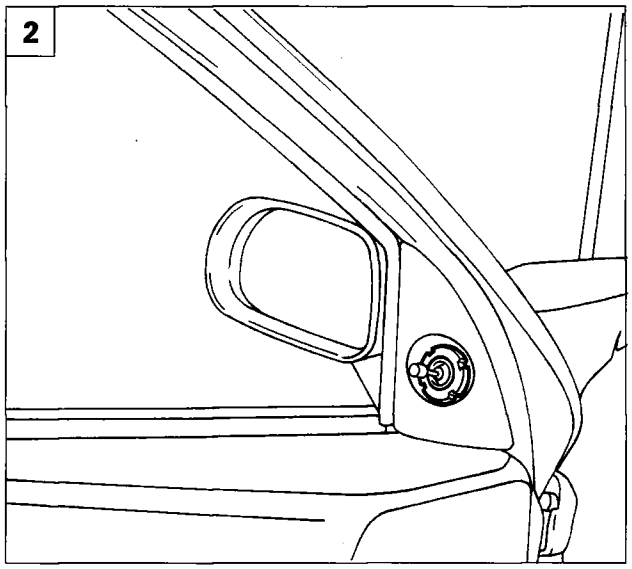

P4F06AM02

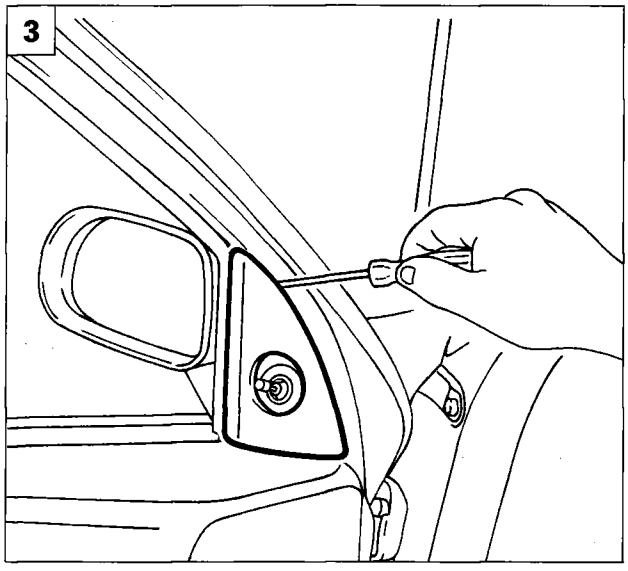

P4F06AM03

REMOVING-REFITTING EXTERNAL REARA VIEW MIRROR (manual)

1. Remove the rubber cover.
2. Undo the fixing ring nut.
3. Remove the fixing cover trim for the mirror, acting on the retaining tabs.
4. Undo the bolts fixing the mirror to the bodyshell.
5. Remove the external rear view mirror complete with plastic trim.

NOTE *To refit simply reverse the order of the operations carried out for the removal.*

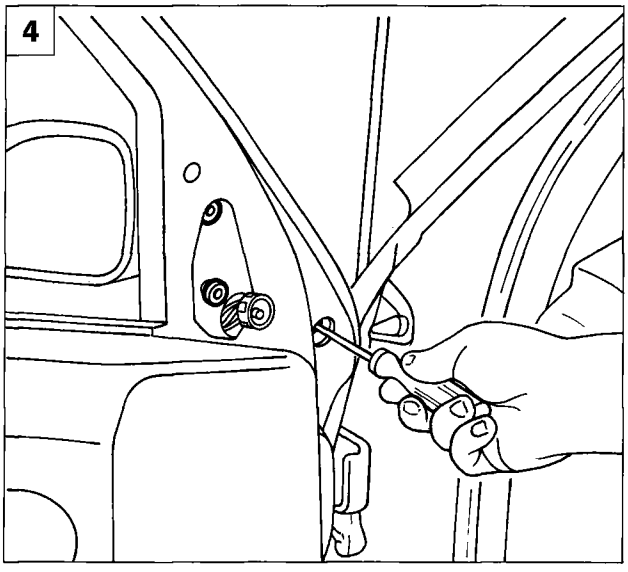

P4F06AM04

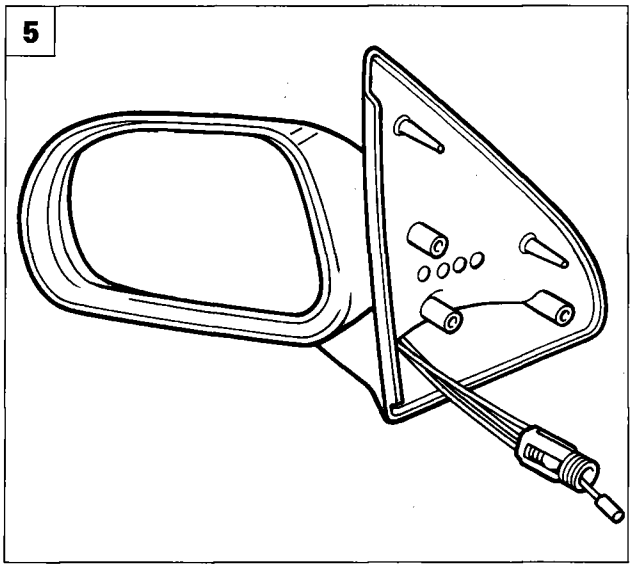

P4F06AM05

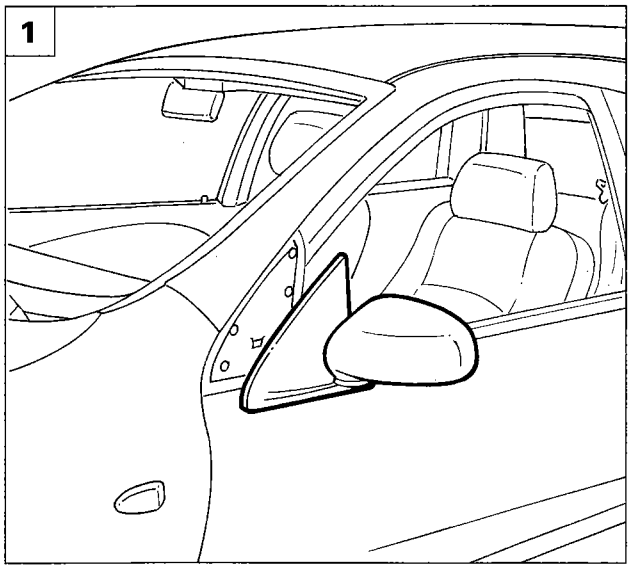

P4F07AM01

REMOVING-REFITTING DOOR FINISHING TRIM

1. Remove the external rear view mirror, following the instructions on the previous page.
2. Remove the door trim, starting from the upper section (A), working towards the lower section (B).

NOTE *To refit simply reverse the order of the operations carried out for the removal.*

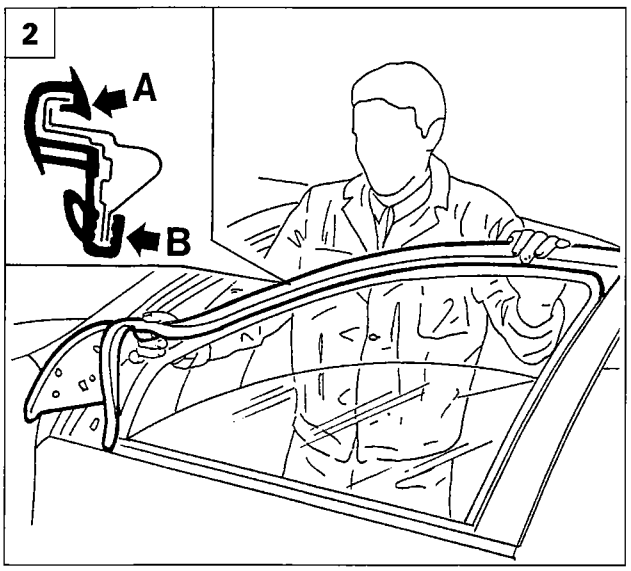

P4F07AM02

REMOVING-REFITTING REAR DOOR PILLAR TRIM

3. Working from outside the vehicle, partly remove the finishing trim and the perimeter trim for the door window housing.
4. Remove the door trim, undoing the fixing bolts shown by the arrows.

NOTE *To refit simply reverse the order of the operations carried out for the removal.*

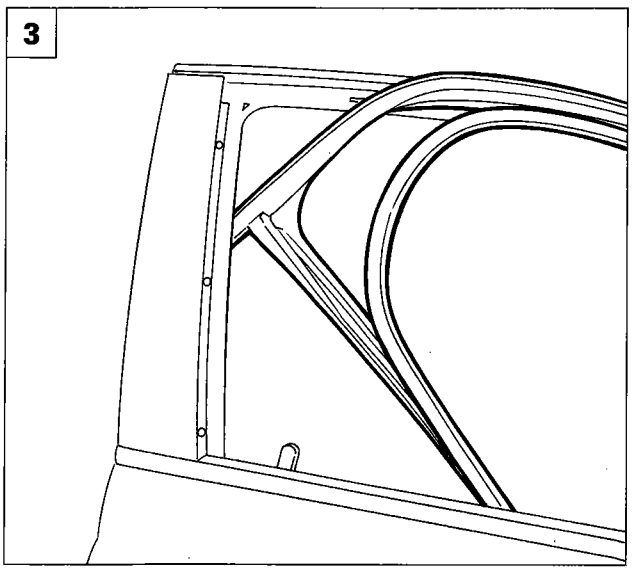

P4F07AM03

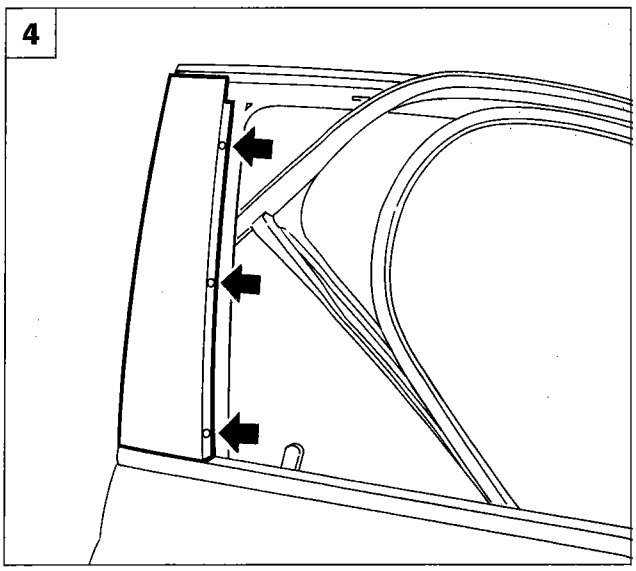

P4F07AM04

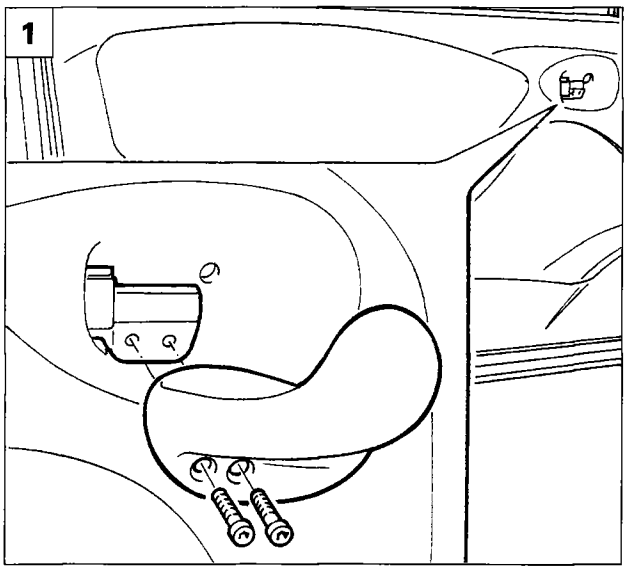

P4F014M01

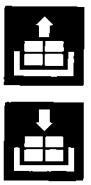

REMOVING-REFITTING DOOR PANEL AND PROTECTIVE LINING

1. Remove the door opening control lever by undoing the fixing bolts shown in the diagram.
2. (Version with manually opened windows - See left inset) Using tool 1878034000, remove the split pin retaiing the crank to the window operating pin.
   (Version with electric windows - See right inset) Remove the switch unit and disconnect the appropriate connection.
3. Undo the bolts fixing the door panel.
4. Using tool 1878077000, remove the buttons fixing the panel to the door, then remove the protective door lining.

NOTE *To refit simply reverse the order of the operations carried out for the removal.*

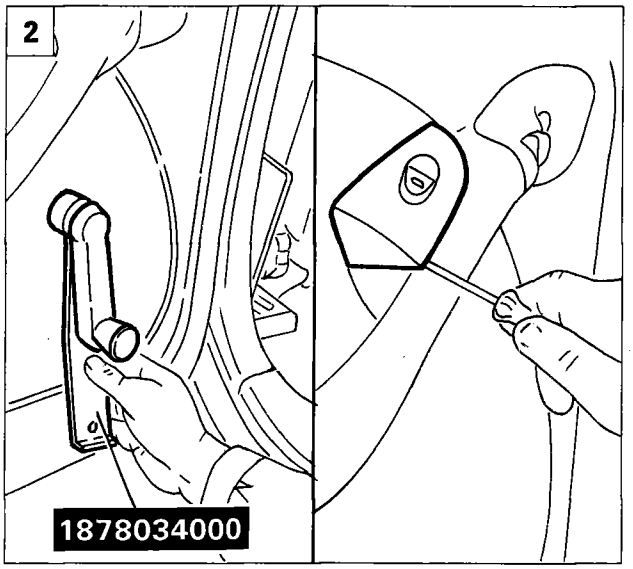

P4F014M02

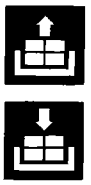

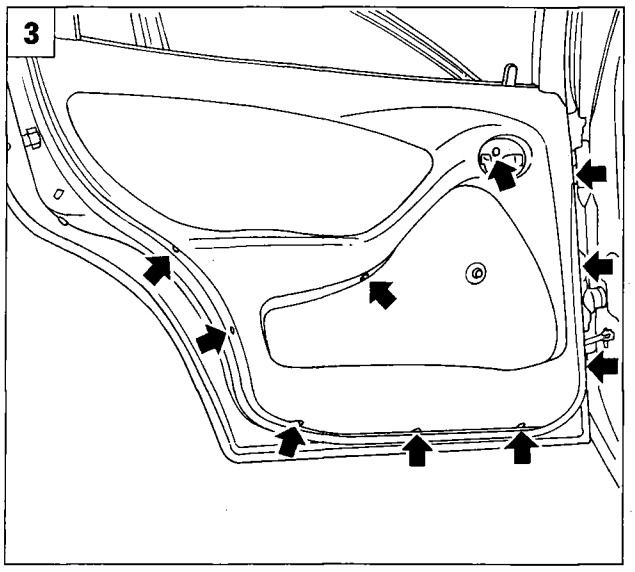

P4F014M03

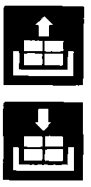

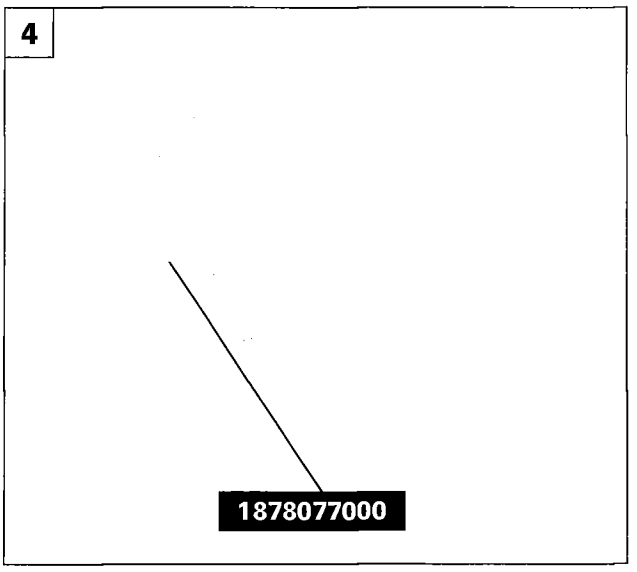

P4F014M04

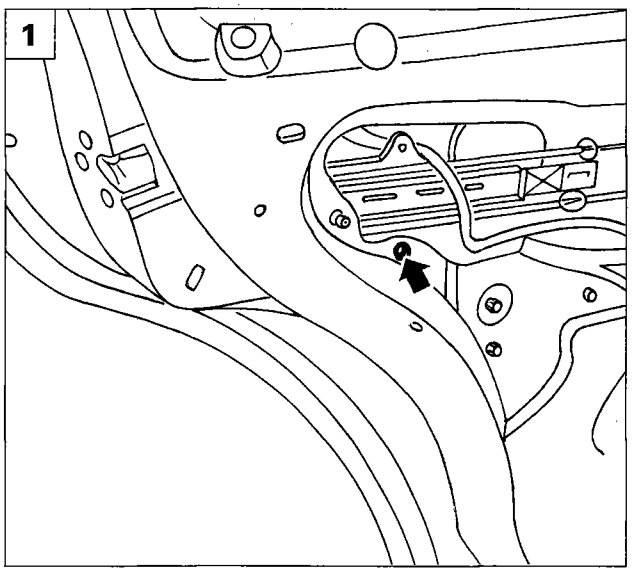

P4F015M01

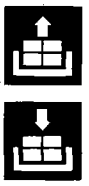

REMOVING-REFITTING FIXED WINDOW GLASS

1. Remove the door panel as described on the previous page and move the protective lining aside.
   - Undo the fixing bolt shown and extract the rear window guide.
   - Carefully lower the window until it reaches the end of travel position.
2. Undo the bolts shown, then remove the fixed window from its housing.

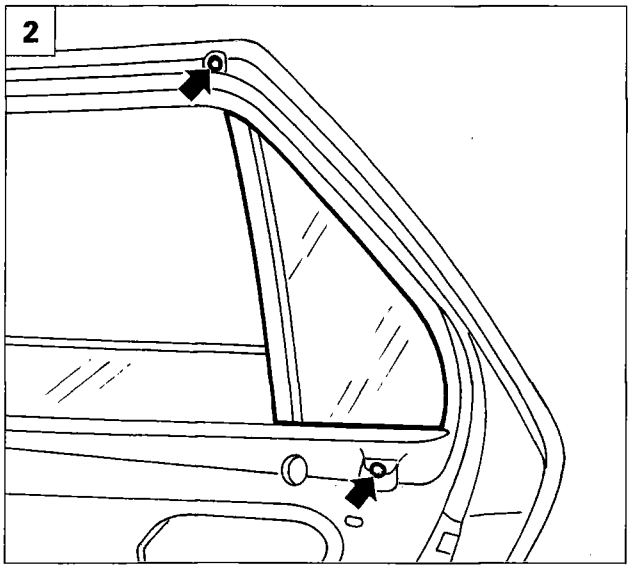

P4F015M02

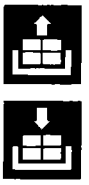

REMOVING-REFITTING LOWERING WINDOW GLASS

Remove the door panel and protective cover, following the instructions on the previous page.
Remove the fixed window glass, as described above.

3. Release the window from its device (the diagram shows the version with manually operated windows; the version with electric windows is the same).
4. Undo the fixing bolt shown and extract the window guide.

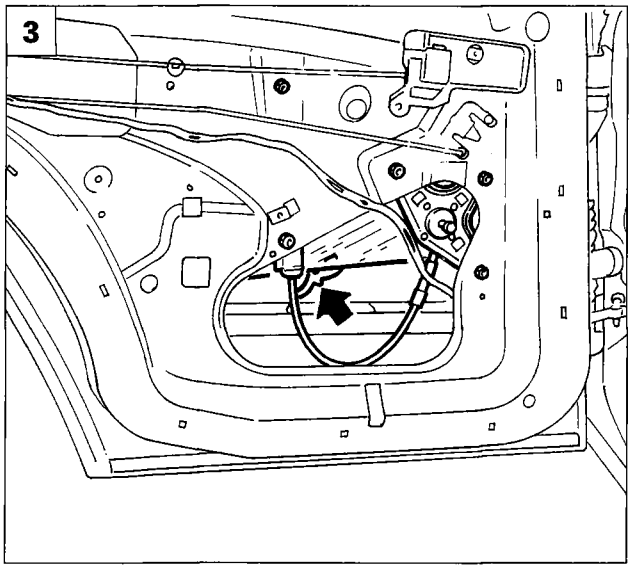

P4F015M03

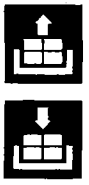

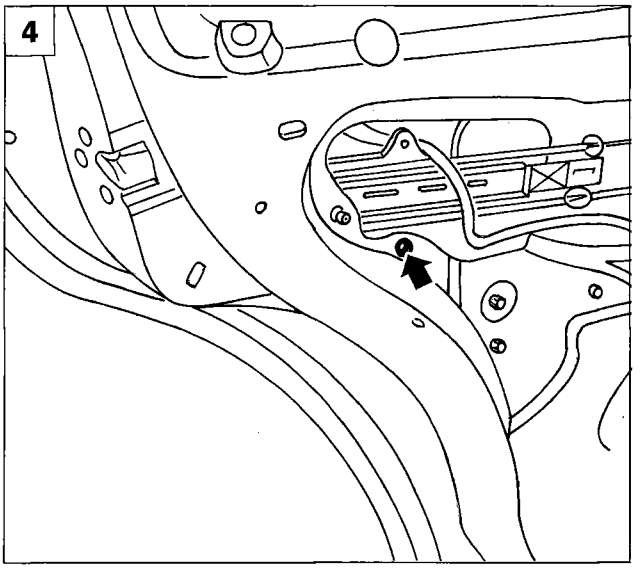

Copyright by Fiat Auto

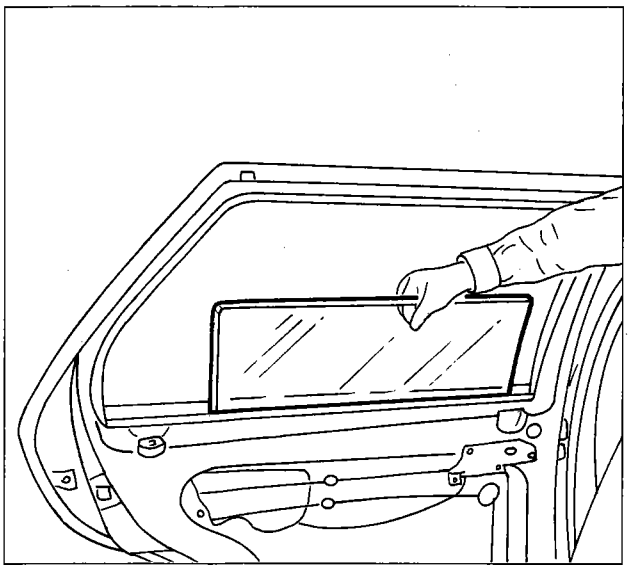

P4F016M01

- Remove the external and internal door perimeter trim, then extract the window.

NOTE *To refit simply reverse the order of the operations carried out for the removal.*

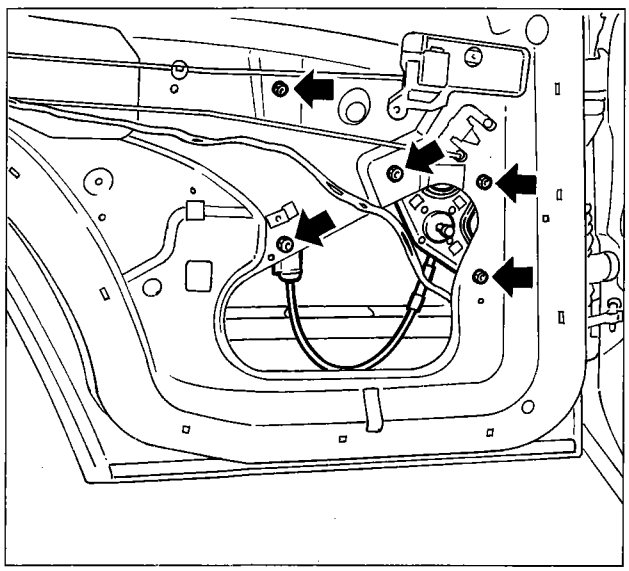

P4F016M02

REMOVING-REFITTING MANUALLY OPERATED WINDOW OPENING DEVICE

- Remove the window from the window opening device, following the instructions given previously, then undo the fixing nuts shown by the arrows and extract the window opening device.

NOTE *To refit simply reverse the order of the operations carried out for the removal.*

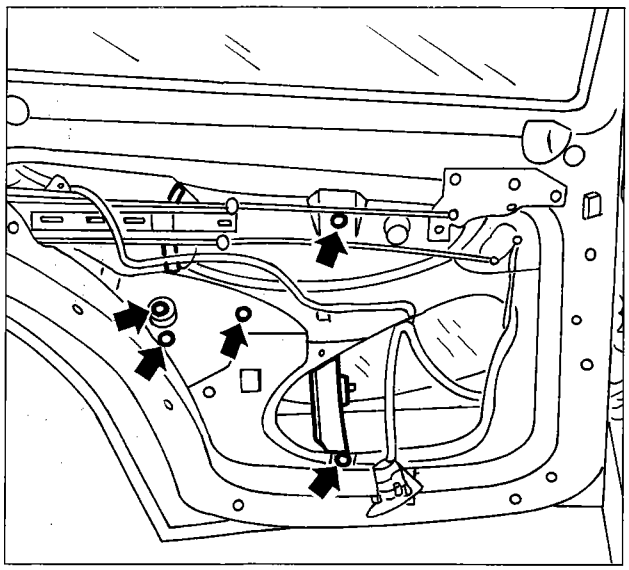

P4F016M03

REMOVING-REFITTING ELECTRICALLY OPERATED WINDOW OPENING DEVICE

- Remove the window from the electrically operated window opening device, following the instructions given previously, then undo the fixing nuts shown by the arrows and extract the window opening device.

NOTE *To refit, simply reverse the order of the operations carried out for the removal.*

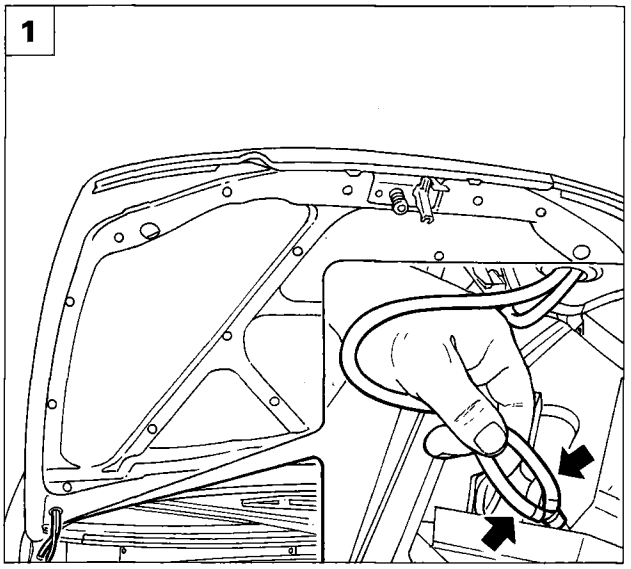

P4F017M01

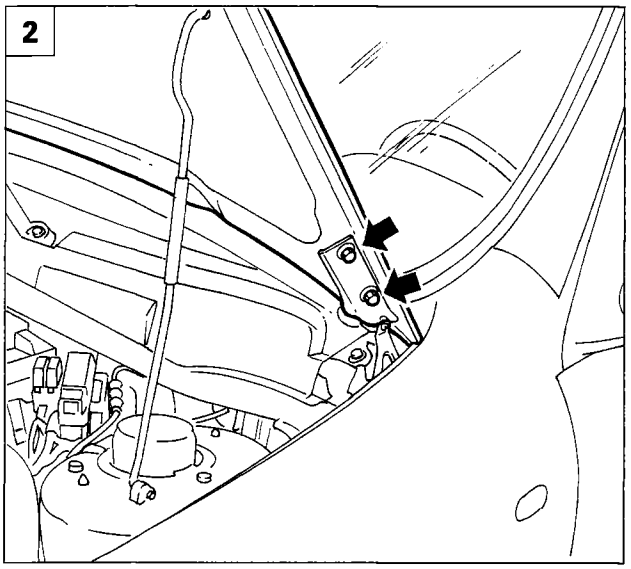

P4F017M02

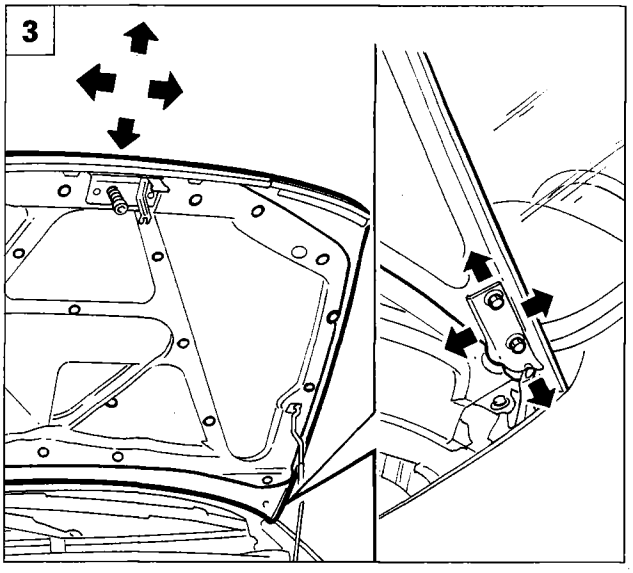

P4F017M03

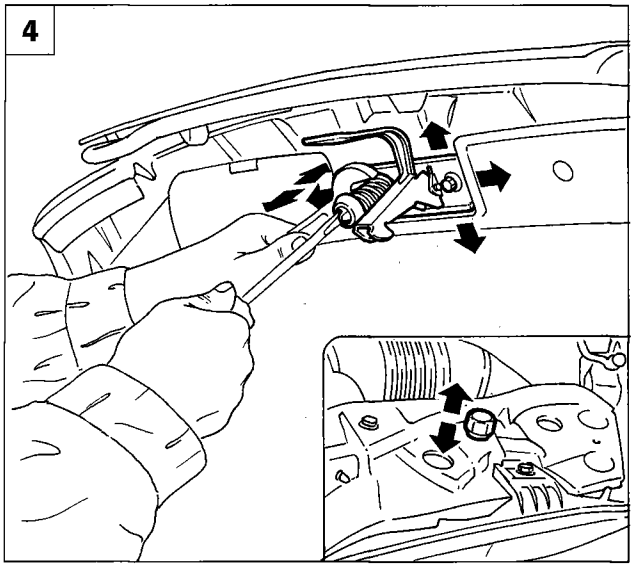

P4F017M04

REMOVING-REFITTING BONNET LID

1. Raise the bonnet lid, then disconnect the windscreen washer pipes.
2. Undo the bolts fixing the bonnet lid, then, with the help of a second operator, remove the lid from the vehicle.

NOTE *To refit simply reverse the order of the operations carried out for the removal.*

ADJUSTMENTS

Adjusting position of bonnet lid

3. Loosen the bolts fixing the bonnet lid, then adjust its position.

NOTE *The arrows indicate the possible movements for the adjustment.*

Adjusting bonnet lid closing device

4. Working as illustrated in the diagram, adjust the vertical position of the bonnet lid; it is possible to carry out the same adjustment by rotating the rubber mountings at the edge of the engine compartment.

NOTE *The arrows indicate the possible movements for the adjustment.*

Copyright by Fiat Auto

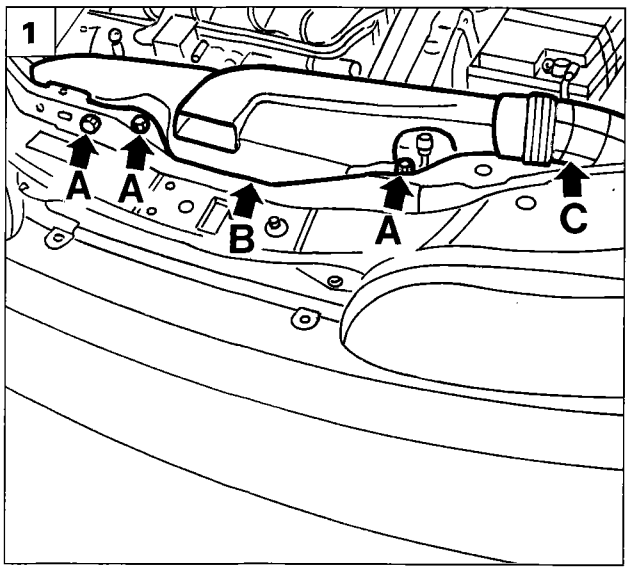

P4F018M01

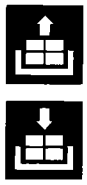

REMOVING-REFITTING BONNET LID OPENING CABLE

1. Open the bonnet lid. Undo the three bolts (A) and remove the the air duct (B) and the curved section (C).
2. Open the band (A) and disconnect the air duct (B) (the air duct shown in the diagram isfor the 1581 version).
   Undo the bolt (C) and remove the fuse cover (D).

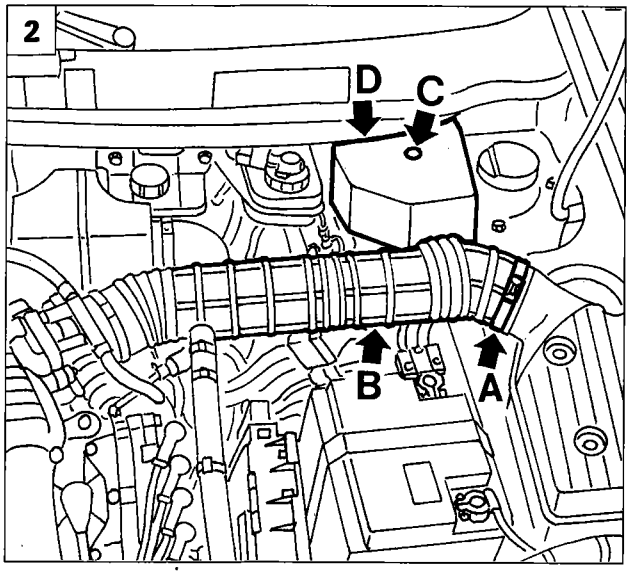

P4F018M02

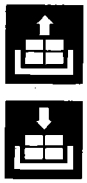

3. Disconnect the bonnet lid opening cable (A) from the fixing housings (B) and (C) and from the retaining spring (D).
   Open the cables passaage (E) and release the opening cable.
4. Working under the steering wheel, remove the cap (A) from the bonnet lid opening lever (B), then release the end of the opening cable (C) from the housing (D). Release the fixing housing (E) for the opening cable from the housing (F) in the bodyshell.

Fix the opening cable to a sensor to facilitatethe subsequent refitting through the bulkhead.
Release and remove then bonnet lid opening cable.

NOTE *To refit, simply reverse the order of the operations carried out for the removal.*

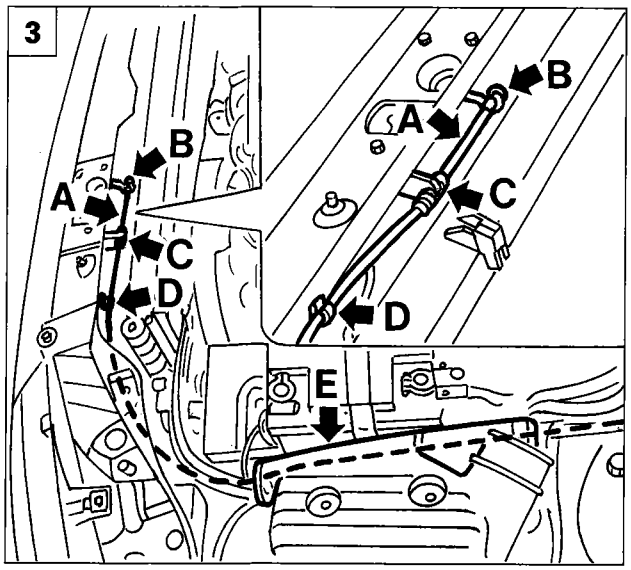

P4F018M03

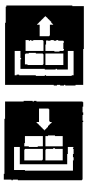

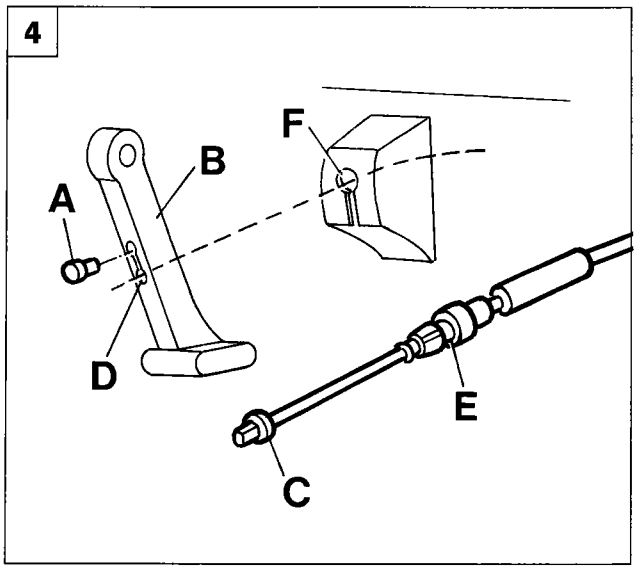

P4F018M04

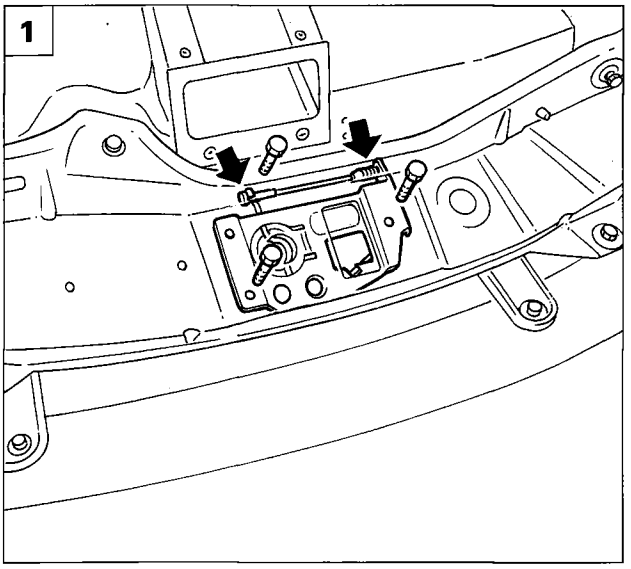

P4F019M01

REMOVING-REFITTING BONNET LID LOCK STRIKER

1. Disconnect bonnet lid opening rod, then remove the striker acting on the fixing bolts.

NOTE *To refit simply reverse the order of the operations carried out for the removal.*

REMOVING-REFITTING WINDSCREEN WASHER PIPES

2. Using tool 1878077000, remove the fixing buttons and remove the bonnet lid sound-proofing lining.

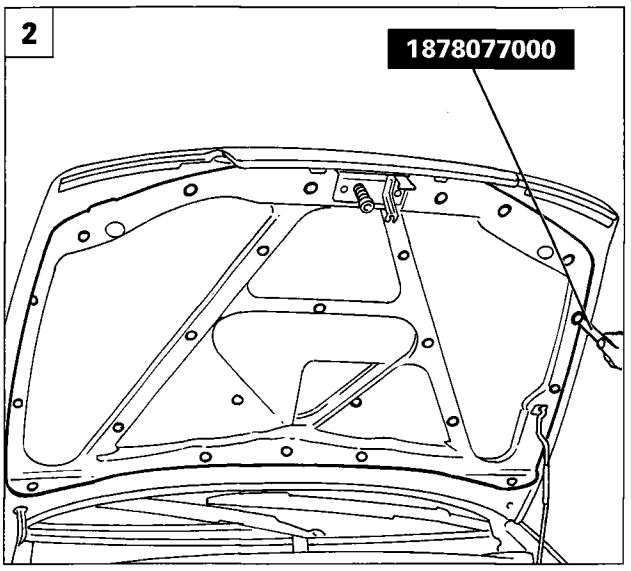

P4F019M02

3. Remove the windscreen washer pipes, releasing them from the bonnet lid after having removed the bands and disconnected them from the jets.

NOTE *To refit simply reverse the order of the operations carried out for the removal.*

REMOVING-REFITTING FRONT GRILLE

4. Raise the bonnet lid, then remove the front grille undoing the fixing nuts shown in the diagram;.

NOTE *To refit simply reverse the order of the operations carried out for the removal.*

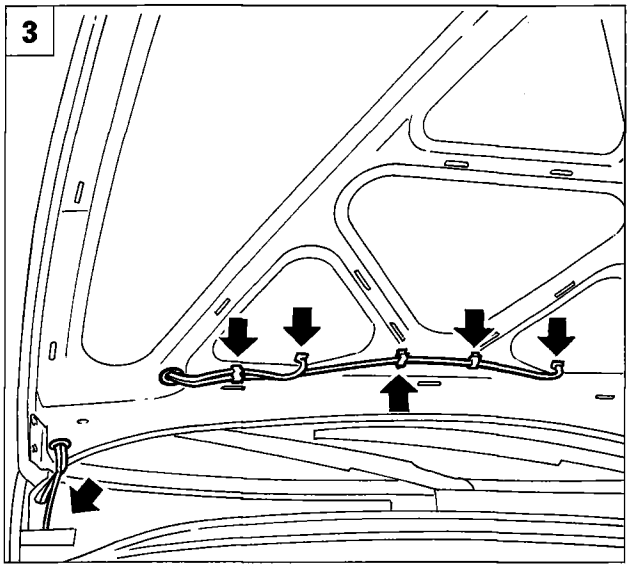

P4F019M03

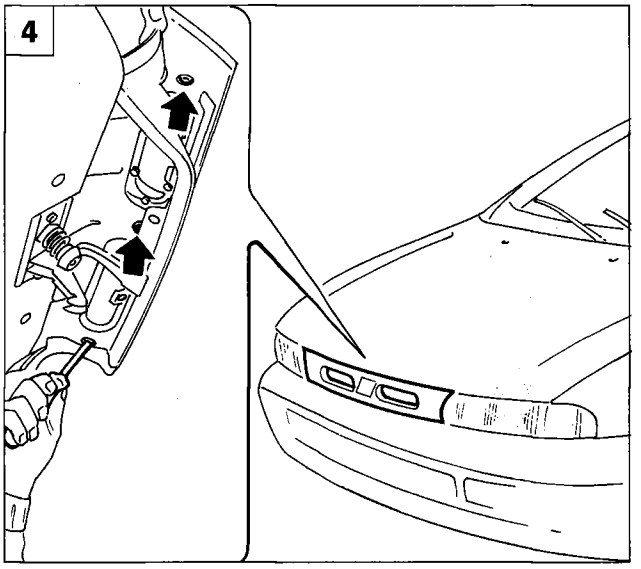

P4F019M04

Copyright by Fiat Auto

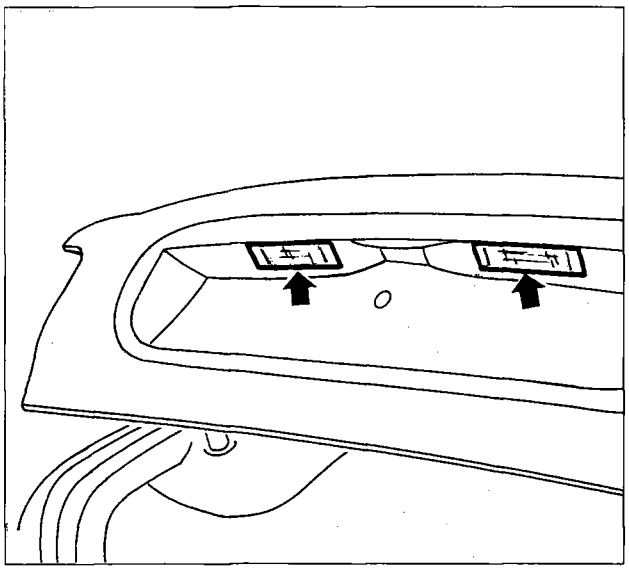

P4F020M01

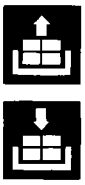

REMOVING-REFITTING BOOT LID

- Using a screwdriver, remove the rear no. plate lights.

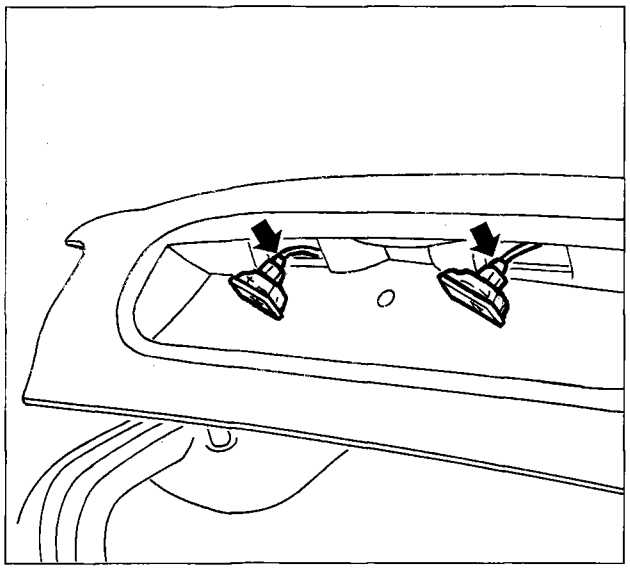

P4F020M02

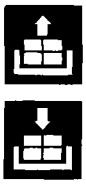

- Disconnect the connectors and recover the number plate lights.

Connect the ends of the no. plate light cables to some sensors in order to faciliate the subsequent refitting to the inside of the cover.

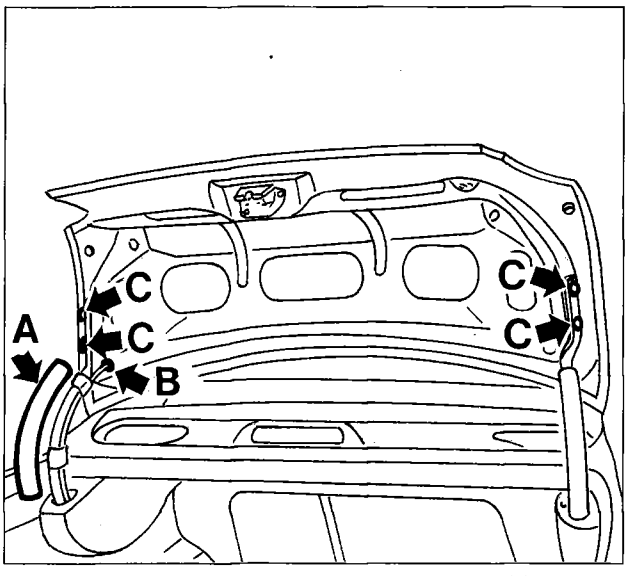

P4F020M03

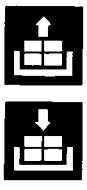

- Release the protection (A), then remove the wiring from the aperture (B).
- Undo the bolts (C) and remove the cover.

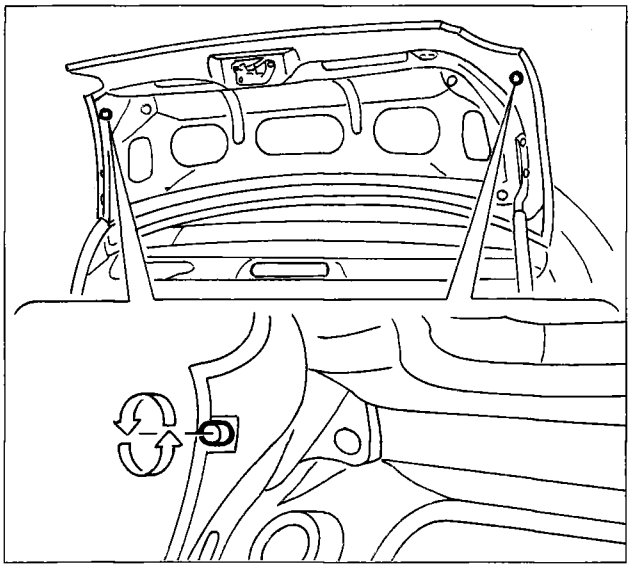

P4F021M01

ADJUSTMENTS

Adjusting position of boot lid buffers

- Rotate the rubber buffers at the end of the boot lid.

ff the buffers are incorrectly adjusted this would involve a force on the lid or a clearance for the closing mechanism, causing damage to the lid itself.

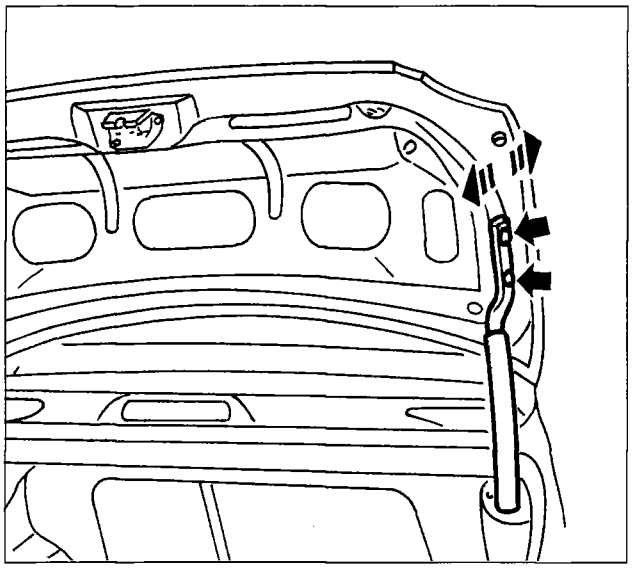

P4F021M02

Adjusting vertical position of boot lid

- Loosen the bolts fixing the lid and adjust its position.

NOTE *The arrows indicate the possible movements for the adjustment.*
If necessary,, it is possible to carry out a further adjustment of the position of the hinge unit (A); see the special paragraph on this subject.

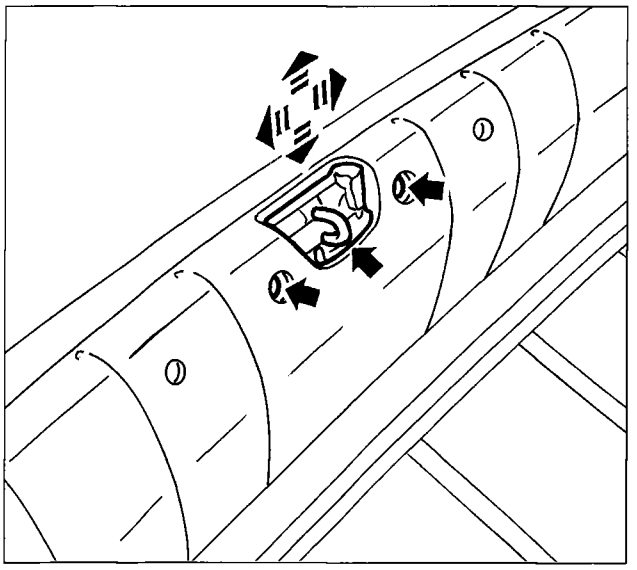

P4F021M03

Adjusting position of boot lid lock striker

- Loosen the bolts fixing the striker and adjust the position.

NOTE *The arrows indicate the possible movements for the adjustment.*

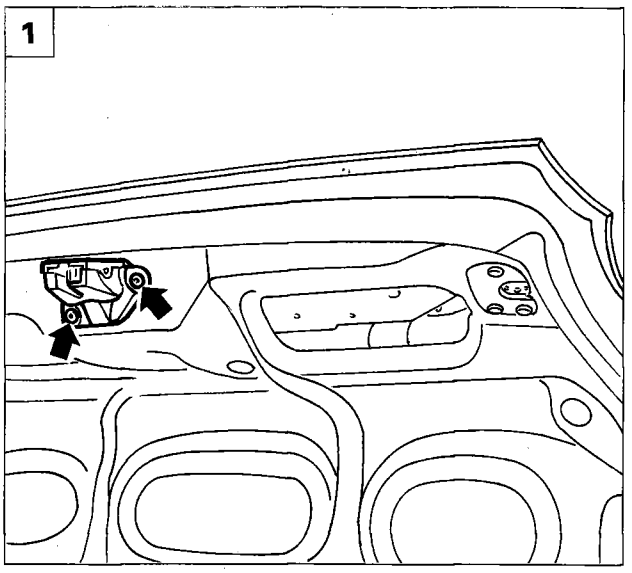

P4F022M01

REMOVING-REFITTING BOOT LID LOCK

1. Open the boot lid and undo the bolts fixing the lock shown by the arrows.
2. Remove the lock releasing the rod joined with the lock barrel.

NOTE *To refit simply reverse the order of the operations carried out for the removal.*

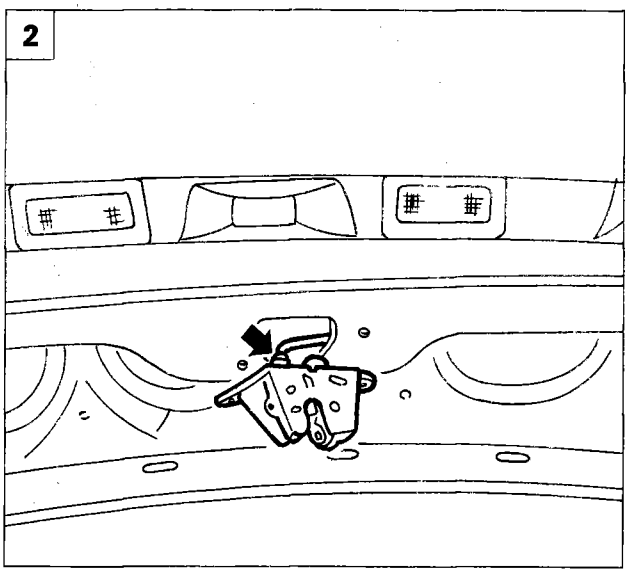

P4F022M02

REPLACING LOCK BARREL

3. Loosen the fixing bolts shown, then remove the barrel from the lock, disconnecting the joining rod.

4. Insert the key in the barrel, lift up the retaining spring, shown by the arrow, then extract the barrel and replace it.

NOTE *To refit simply reverse the order of the operations carried out for the removal.*

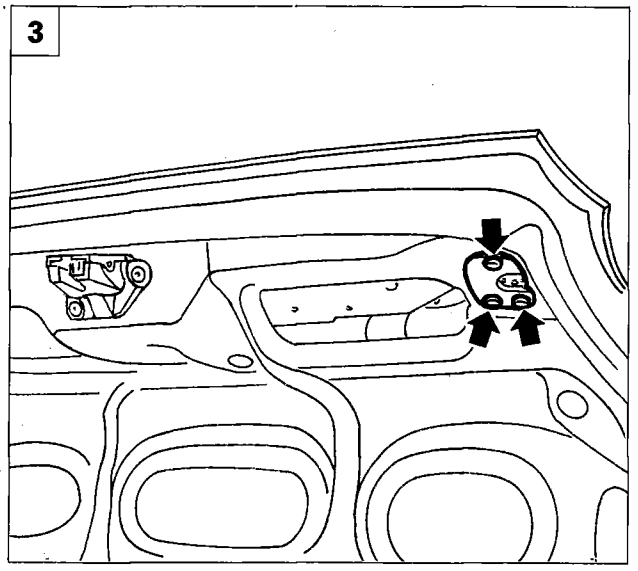

P4F022M03

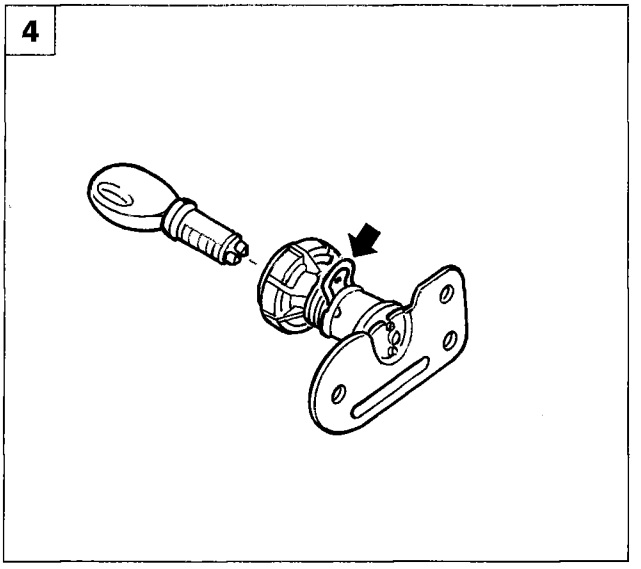

P4F022M04

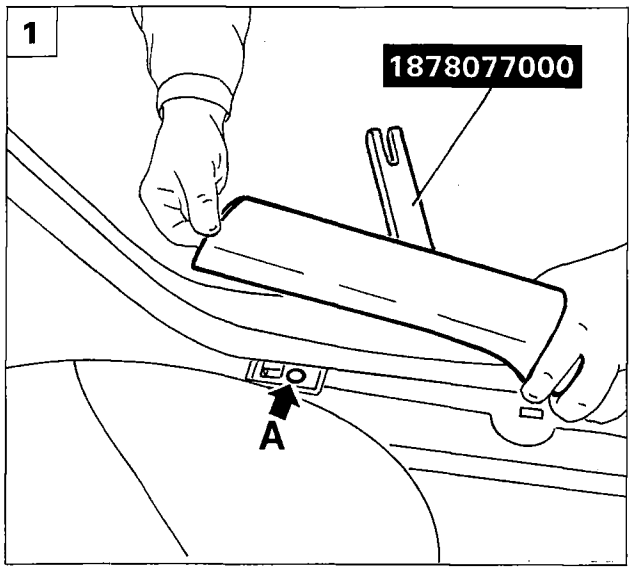

P4F023M01

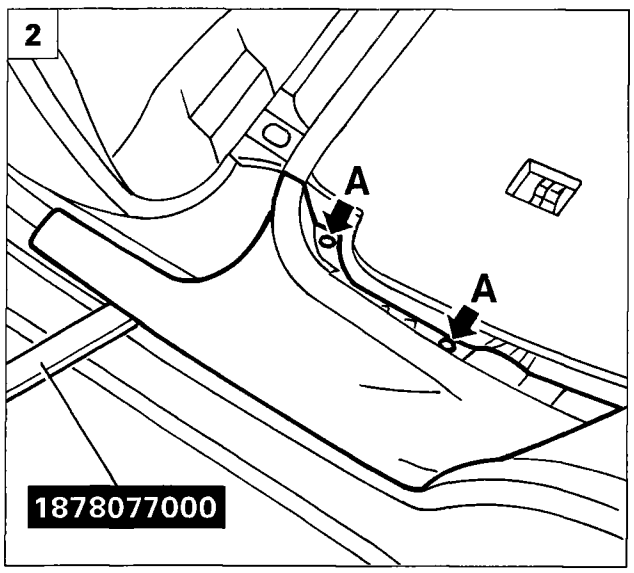

P4F023M02

REMOVING-REFITTING BOOT LID OPENING CABLE

1. Undo the front bot under the dashboard for the running board, using tool 1878077000 release and raise the front left running board; undo the bolt (A) fixing the pillar cover.
2. Fold over the rear seat cushion (if the cushion is fixed, remove it as described in the specific paragraph).
   Undo the bolts (A) fixing the left rear running board, then, using tool 1878077000, release it and remove it.
3. Release the fixing cover (A) and undo the bolt fixing the left front seat belt. Undo the bolt (**B**) fixing the pillar cover.
   Move the lower part of the pillar cover aside after having removed the door trims (C).
4. Using a screwdriver, release the lower retainer for the boot lid release knob, then remove the actual knob.

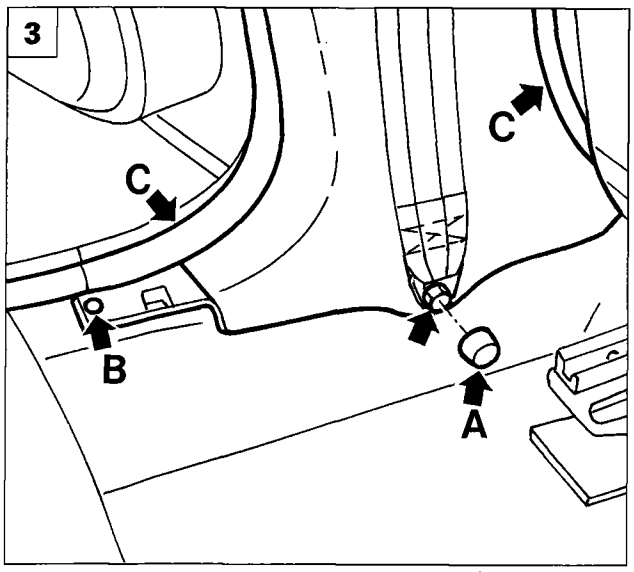

P4F023M03

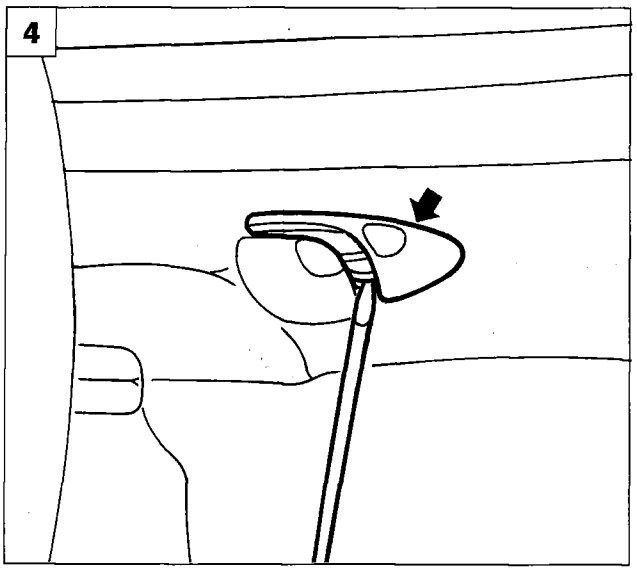

P4F023M04

70.

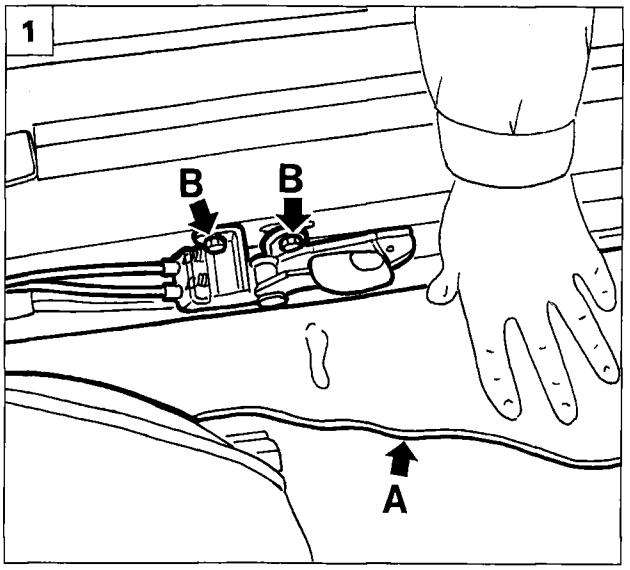

P4F024M01

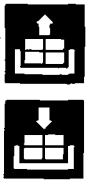

1. Move the carpet (A) aside and remove the boot lid/fuel filler flap opening levers assembly, after having undone the fixing bolts (B).
2. Disconnect the boot lid opening cable from the appropriate fixing (A), then from the retaining cable (B).
   Disconnect the cable from the spring (C).
3. In the area of the rear seat, disconnect the cable from the springs (A) and from the band (B).
4. Remove the luggage compartment floor covering (A).
   Undo the bolts fixing the rear luggage compartment protection, then remove the protection.

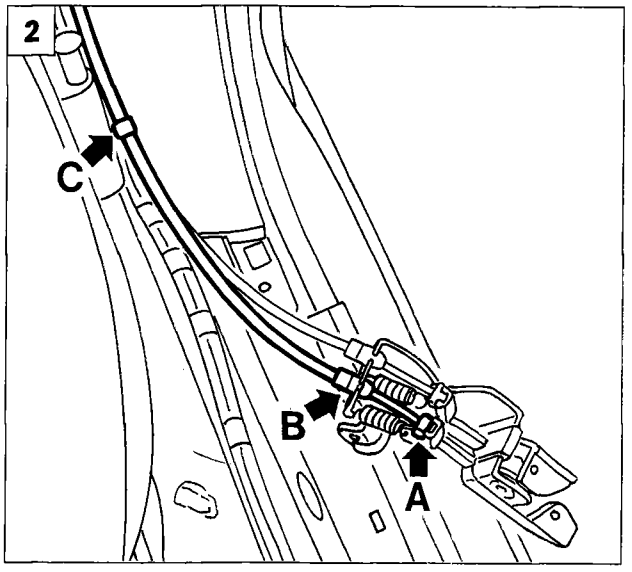

P4F024M02

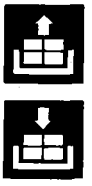

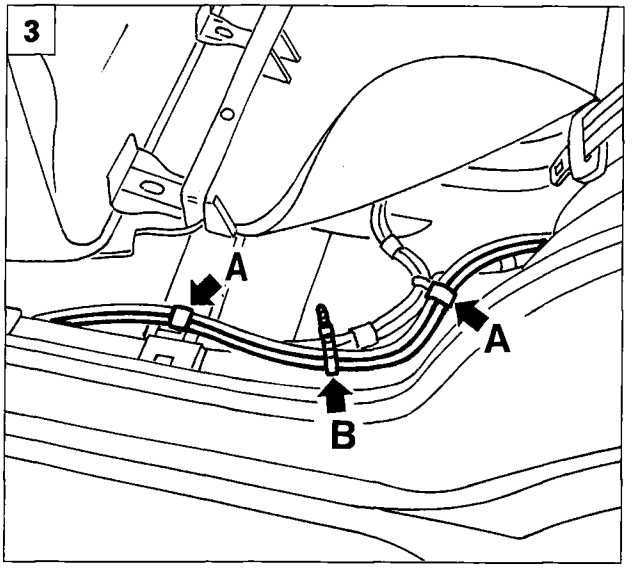

P4F024M03

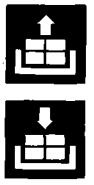

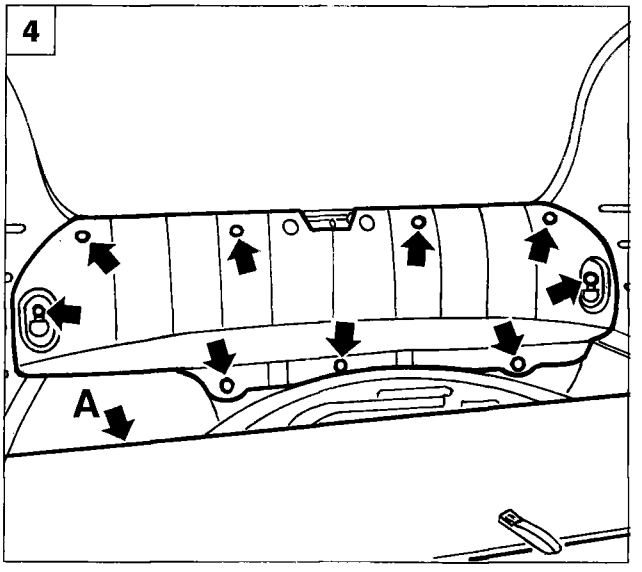

P4F024M04

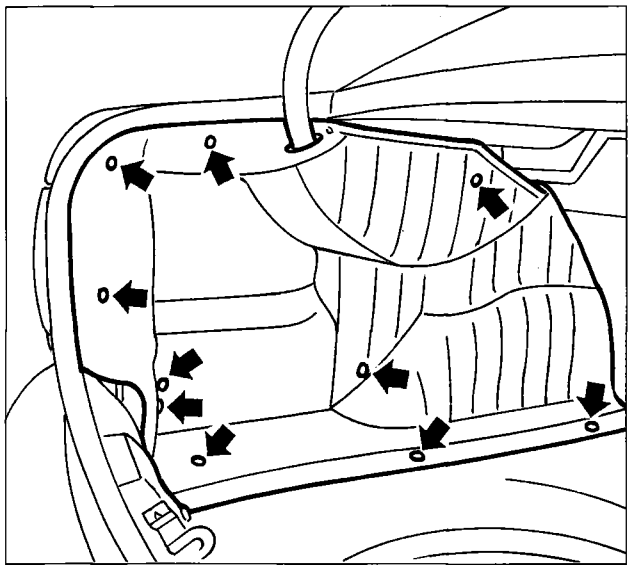

P4F025M01

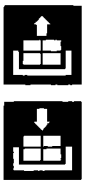

- Undo the fixing bolts and release the buttons for the luggage compartment left covering, then remove it.

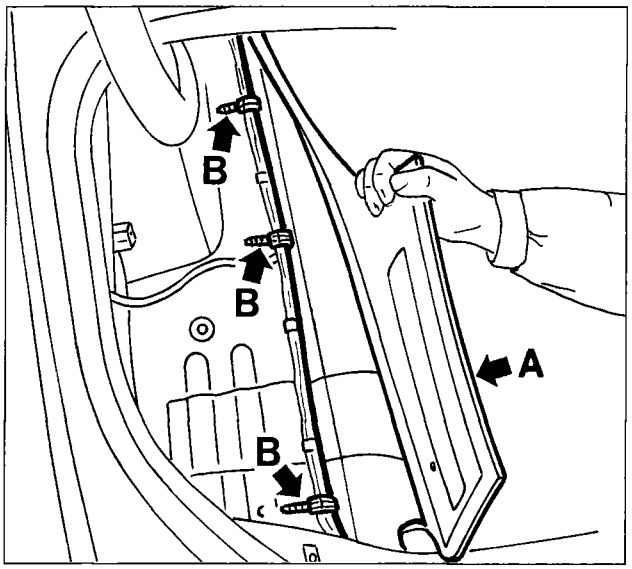

P4F025M02

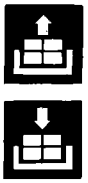

- Working on the left hand side of the luggage compartment, lift up the floor covering (A) and release the cable from the three bands (B).

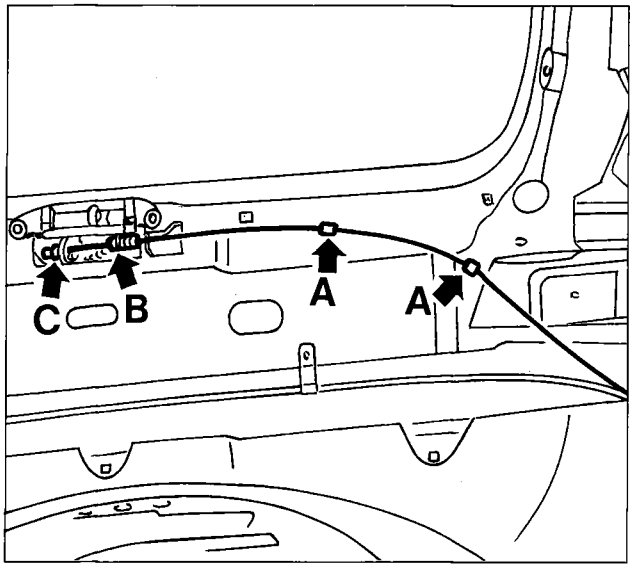

P4F025M03

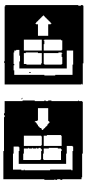

- Release the cable from the two springs (A), then release it from the retainers (B and C) and remove it from the vehicle.

NOTE *To refit, simply reverse the order of the operations carried out for the removal.*

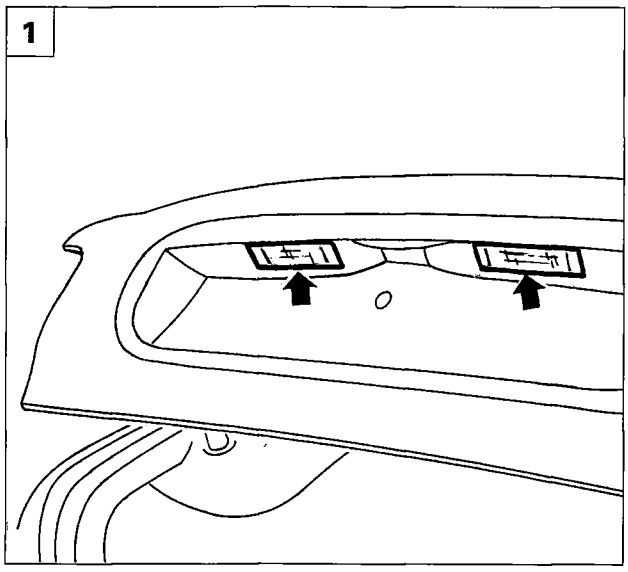

P4F020M01

REMOVING-REFITTING REAR NUMBER PLATE HOLDER

1. Using a screwdriver, remove the rear number plate lights.
2. Disconnect the connectors and recover the number plate lights.
3. Undo the two nuts fixing the number plate holder through the openings (A).
   Using a hot air jet, adjusted to 80°C, heat the entire perimeter of the number plate holder, working from the inside of the boot lid.
4. Release the retaining tabs for the number plate holder, then, pressing from inside the actual holder, remove it.

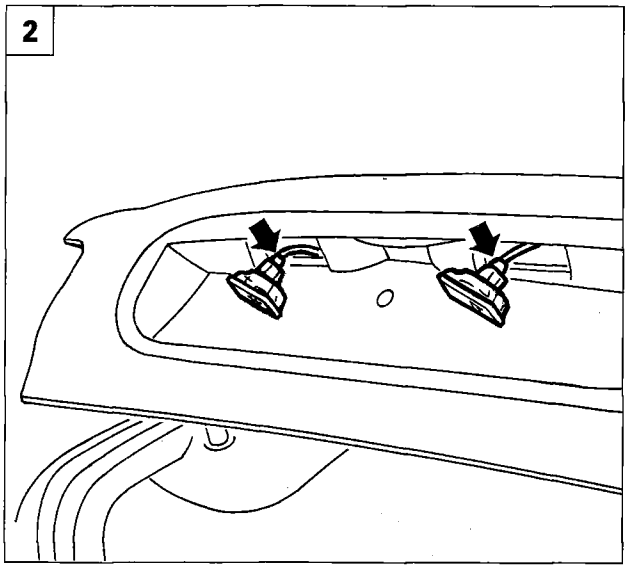

P4F020M02

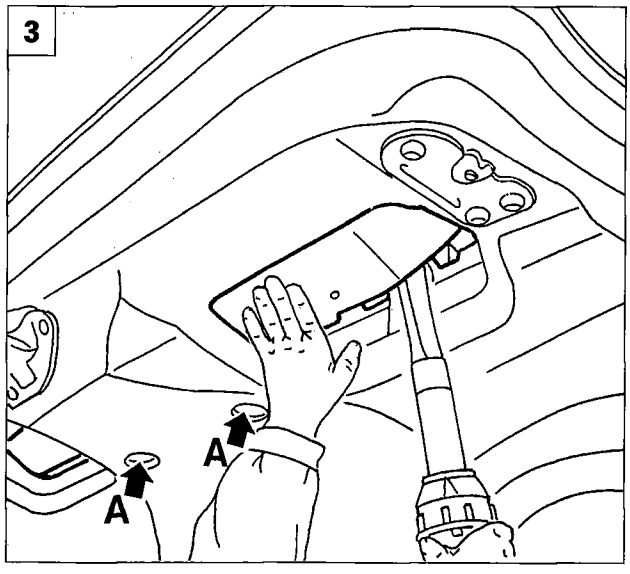

P4F026M01

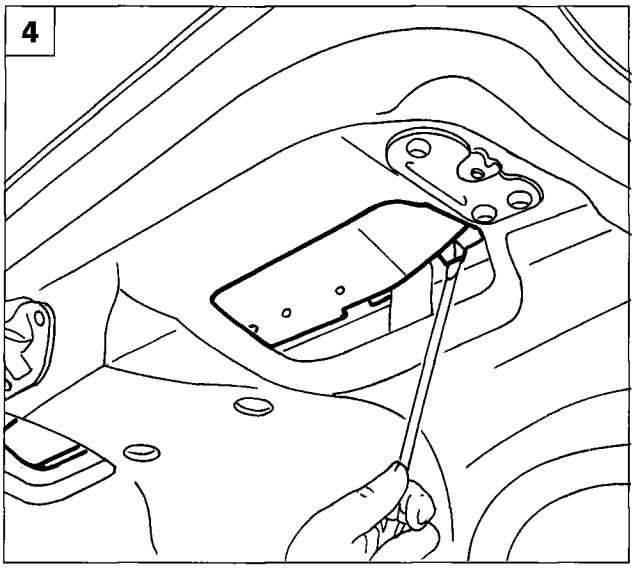

P4F026M02

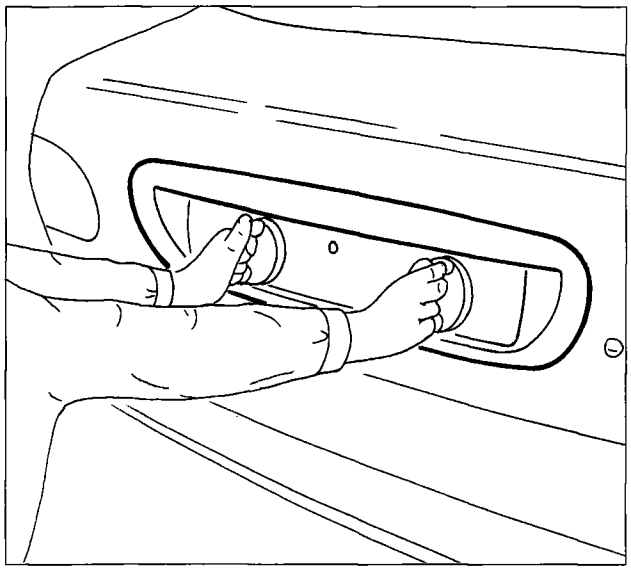

P4F027M01

PREPARING THE SPARE PART

NOTE *If the number plate holder is being replaced, it is necessary to paint the outer surface of the replacement part.*
If the number plate holder is being reused, check carefully that it has not been distorted.

- Using the special suction pads, position the replacement part in place and check that the alignment with the boot lid is correct.

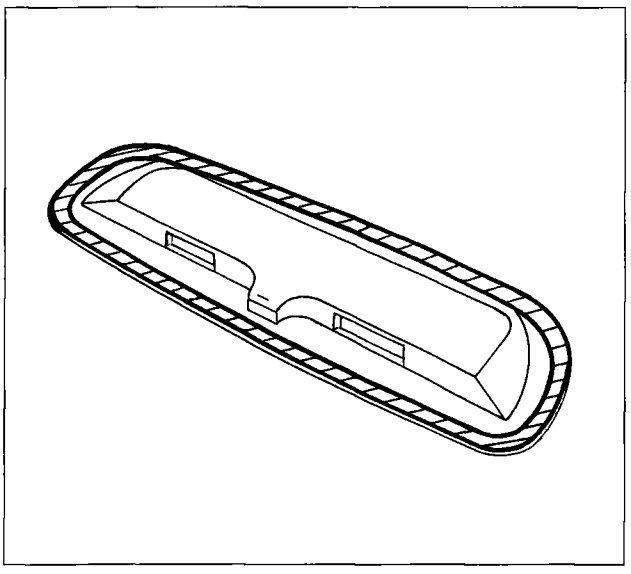

P4F027M02

If the number plate holder which has been removed is being reused:
- Using a suitable blade, cut and level the sealant trying to reduce the thickness to a minimum. It is not necessary to completely remove the remaining sealant. Take care not to damage the number plate holder.

If a new number plate holder is being used:
- Thoroughly clean the housing of the sealant with an air jet and degrease fully with heptane.
- Apply the adhesion promoter (primer), using the pad which comes with the kit, to the perimeter where the sealant is applied.
- Wait for 15 minutes before proceeding with the operations in order to allow the evaporation of the adhesion promoter (primer) diluent.

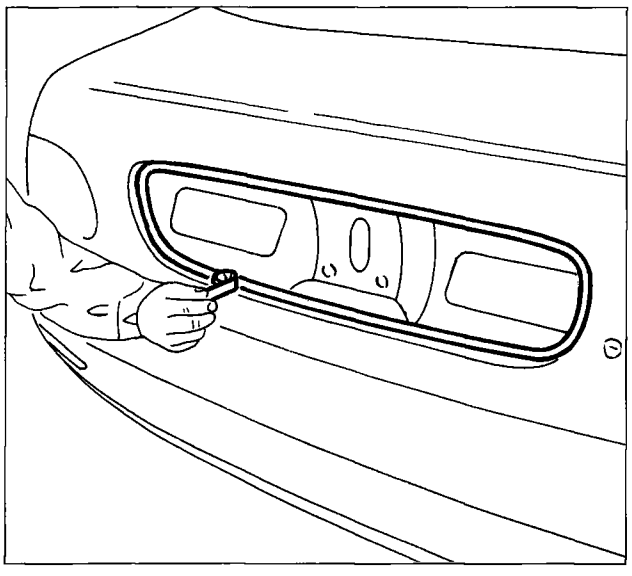

P4F027M03

Preparing the boot lid

- Using a suitable blade, cut and level the sealant in the number plate holder housing in the boot lid.

Whilst leveling the sealant, it is necessary to take special care not to damage the body paintwork.

- Thoroughly clean and degrease the housing for the number plate holder in the boot lid, using a wad of paper soaked in heptane.

Copyright by Fiat Auto

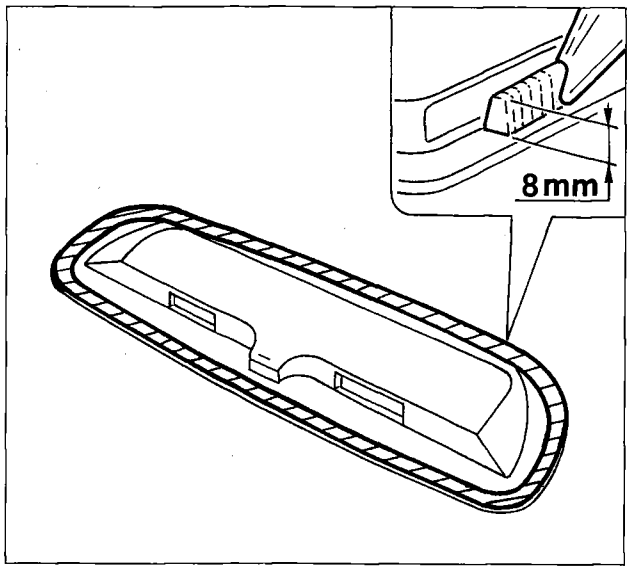

P4F028M01

Refitting

- using a spray gun, apply the SP3 (SPECIAL ENGINES) silicon sealant or (MASCHERPA) EMAX 160 or an equivalent product, to the number plate holder contact surface, starting from the lower part, as illustrated in the diagram;

NOTE *Cut the plastic nozzle in order to apply the sealant so that the correct amount of sealant as shown in the inset comes out.*

Neither too much nor too little sealant should be applied and it should be even; also, the end section should join up with the beginning thereby forming a seal; any irregularities should be corrected as appropriate.

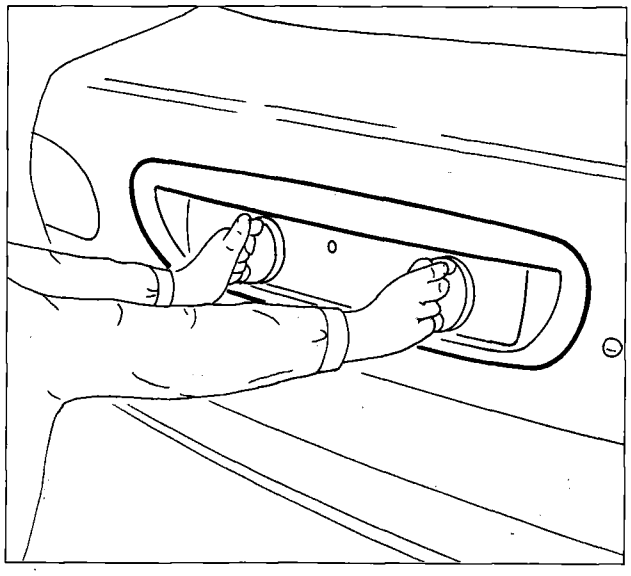

P4F027M01

- Using the special suction pads, position the number plate holder in its housing in the boot lid;
- Work from inside the luggage compartment on the number plate holder retaining tabs to ensure the correct fitting.

The number plate holder must be positioned within 5 minutes after applying the sealant.

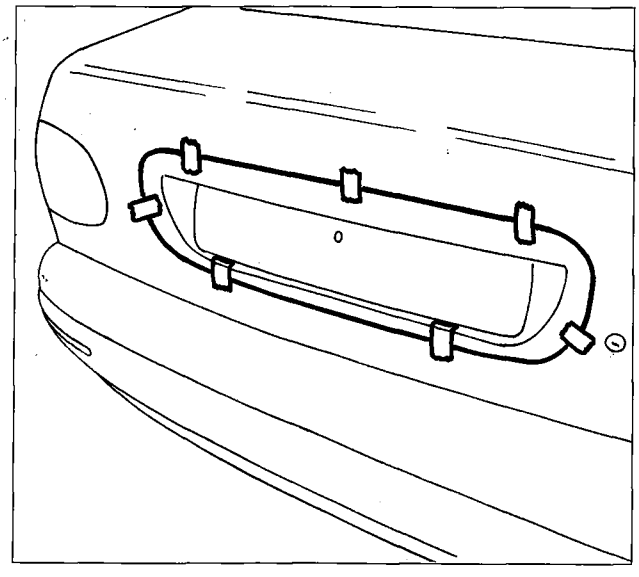

P4F028M02

- keep the number plate holder in position in its housing, as shown in the diagram, until the sealant has hardened.

It is necessary to wait for at least 3 hours before the vehicle can be moved around the workshop as normal.

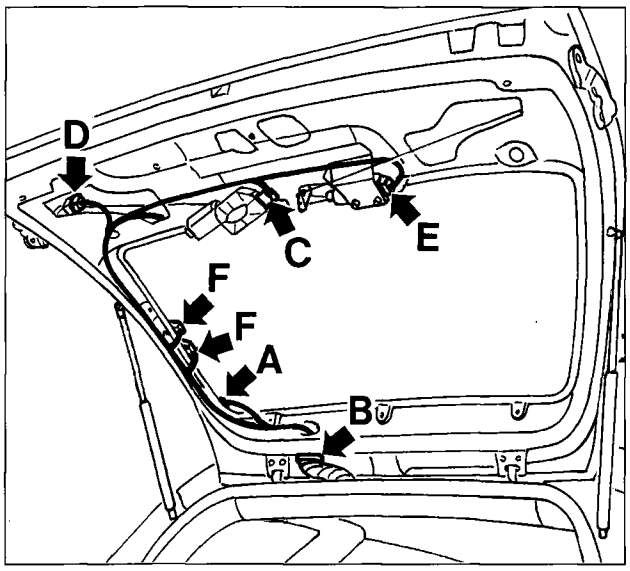

P4F029M01

REMOVING-REFITTING REAR TAILGATE

- Remove the interior fittings and the number plate holder lights, following the instructions in the specific paragraphs.
- Disconnect the connector (A) for the rearscreen washer pipe.
- Remove the protective outer casing (B).
- Disconnect the connectors (C, D, E, F).

Where necessary, fix the cables and connect them to a sensor in order to facilitate the subsequent refitting inside the tailgate.

- Working carefully, remove the cables from the tailgate.

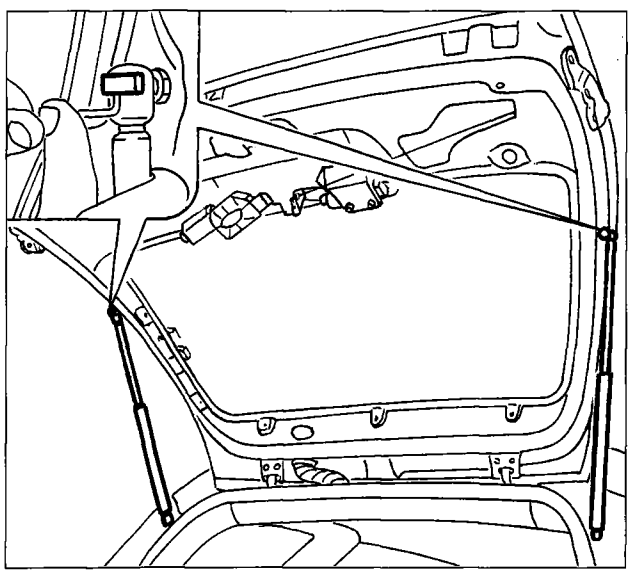

P4F029M02

- Working as illustrated in the detail in the diagram, release the retaining spring for the shock absorber stem; then remove the shock absorber stem from the pin on the tailgate.

Support the tailgate before continuing with the removal operations.

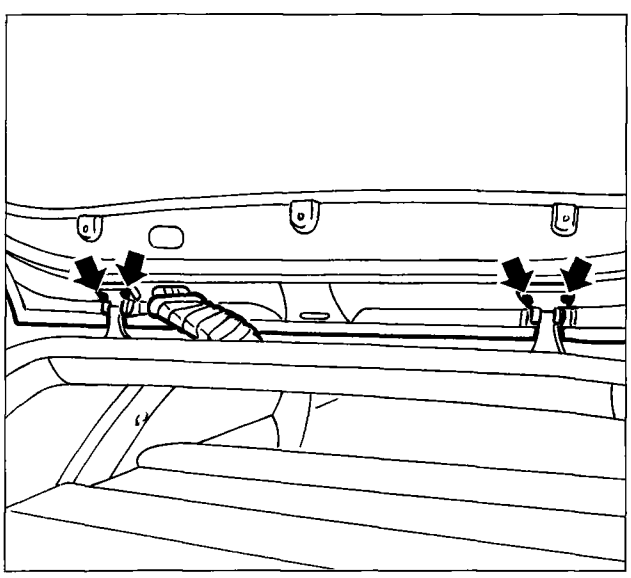

P4F029M03

- Undo the bolts fixing the hinges to the tailgate.
- Remove the tailgate from the vehicle, with the help of a second operator.

NOTE *To refit, simply reverse the order of the operations carried out for the removal.*

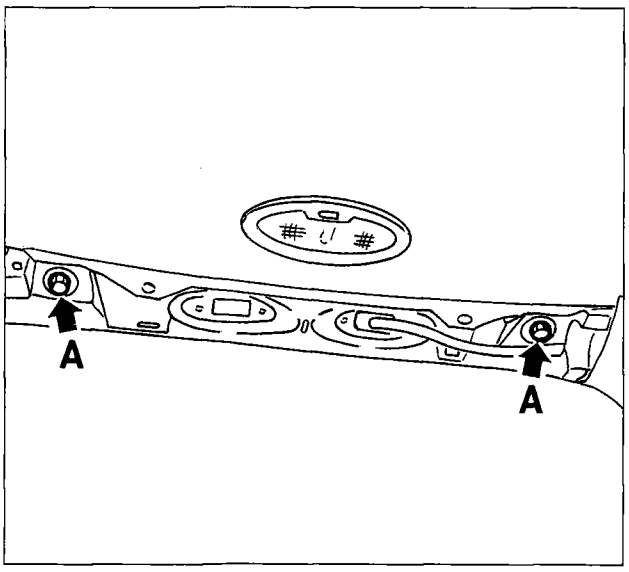

P4F030M01

ADJUSTMENTS

Adjusting position of tailgate

- Remove the upper panel for the tailgate working as described overleaf.
- Loosen the bolts fixing the hinges (A).

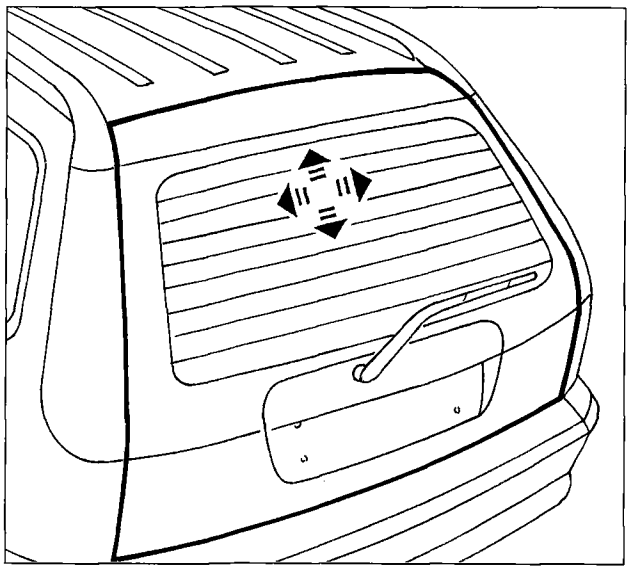

P4F030M02

- Adjust the position of the tailgate.

NOTE *The arrows indicate the possible movements for the adjustment.*

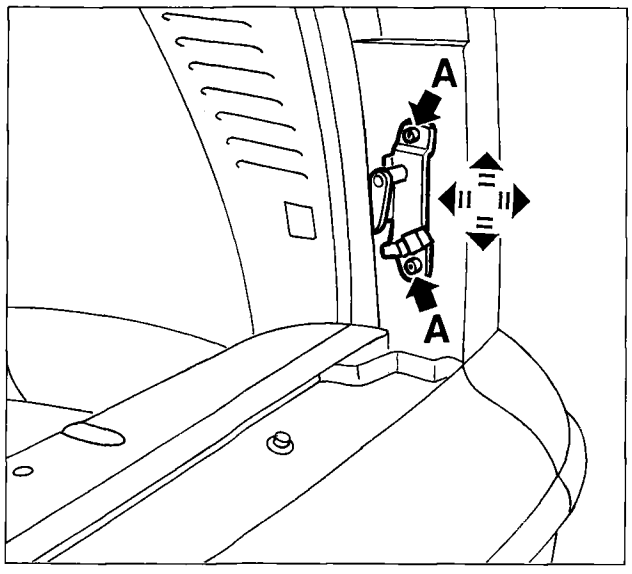

P4F030M03

Adjusting position of rear tailgate lock strikers

- Loosen the bolts (A) fixing the strikers and adjust their position.

NOTE *The arrows indicate the possible movements for the adjustment.*

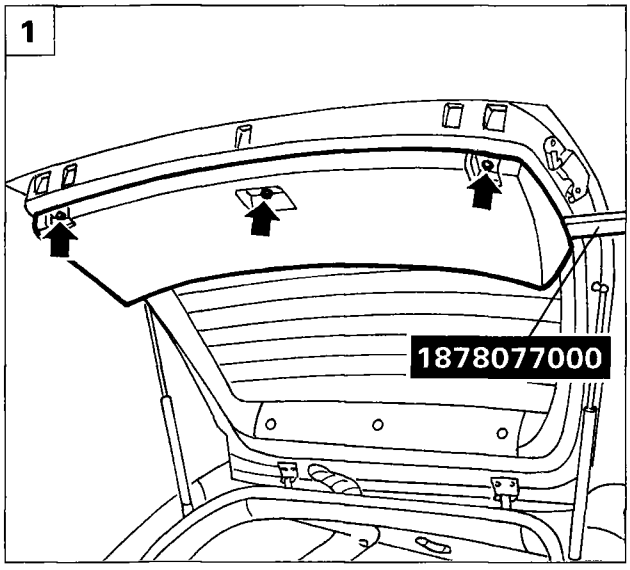

P4F031M01

REMOVING-REFITTING TAILGATE INTERIOR FITTINGS

Lower panel

1. Open the rear tailgate and undo the bolts shown.

- Using tool 1878077000, separate the panel for the tailgate from the retaining springs.

Upper panel

2. Undo the bolts shown and move the upper panel slightly to one side.
3. Disconnect the connector from the 3rd brake light, then remove the upper panel.

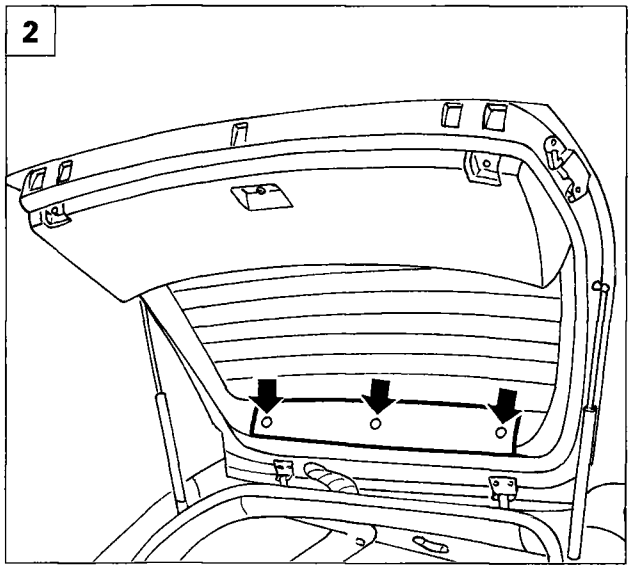

P4F031M02

Dismantling-reassembling 3rd brake light from upper panel

4. Undo the fixing bolts and remove the 3rd brake light.

NOTE *The bulbs for the 3rd brake light cannot be replaced.*

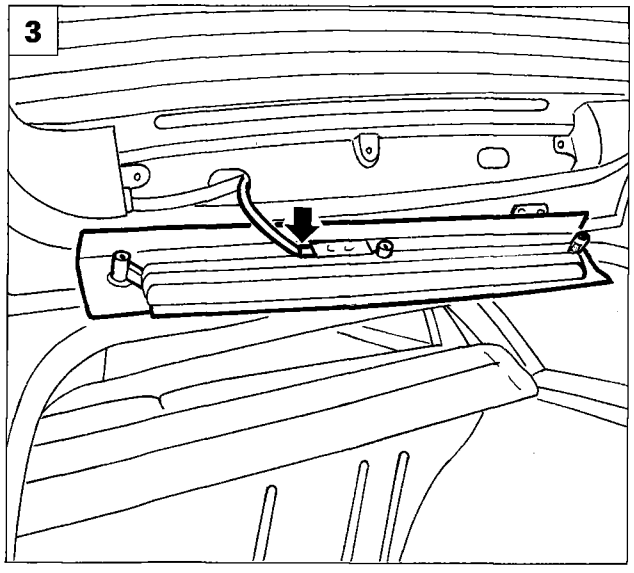

P4F031M03

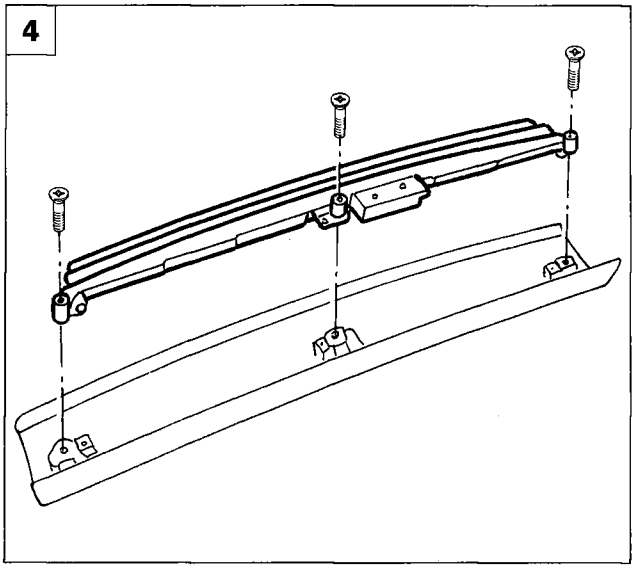

P4F031M04

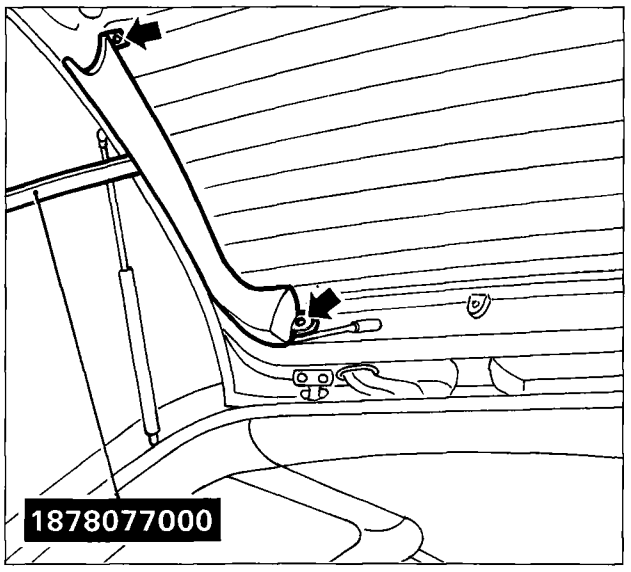

P4F032M01

Side panels

- Undo the bolts shown.
- Using tool 1878077000, separate the side panel from the retaining springs.

NOTE *To refit, simply reverse the order of the operations carried out for the removal.*

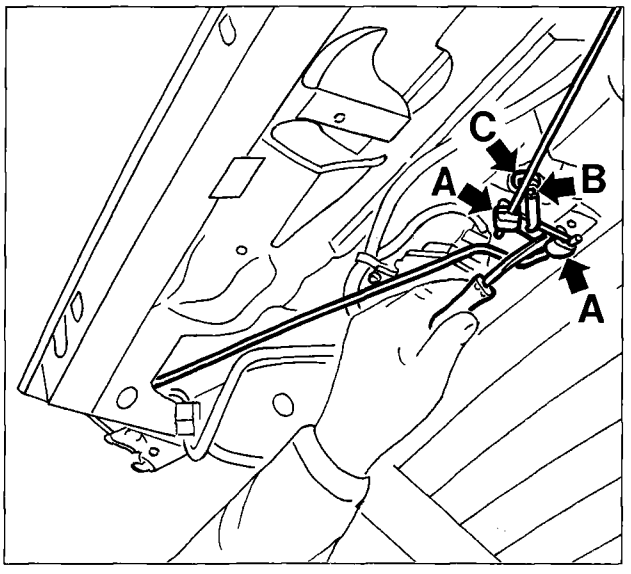

P4F032M02

REMOVING-REFITTING REAR TAILGATE LOCK IDLER

- Remove the lower tailgate panel as described on the previous page.
- Remove the central locking motor (see Group 55 - Electrical Equipment).
- Open the retainers (A) for the lock control rods.
- Undo the bolt (B) and remove the idler.
- Release the seal (C) from its housing.

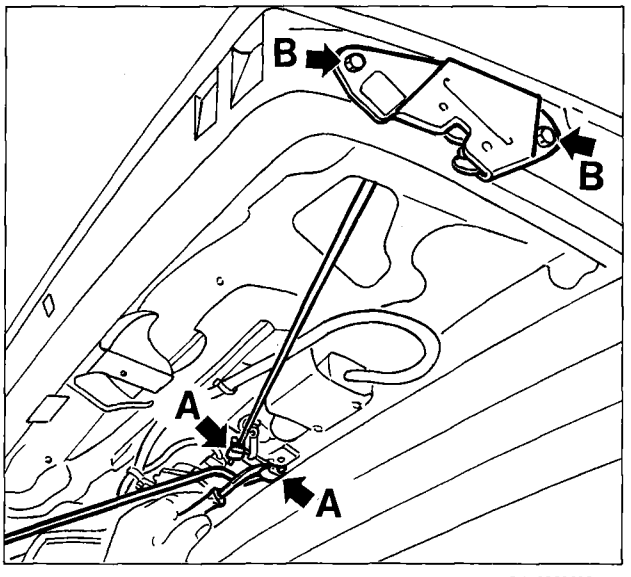

P4F032M03

REMOVING-REFITTING REAR TAILGATE LOCKS

- Remove the lower panel for the tailgate as described on the previous page.
- Open the retainer (A) for the lock control rod involved in the removal.
- Undo the bolts (B) and remove the lock with the rod.

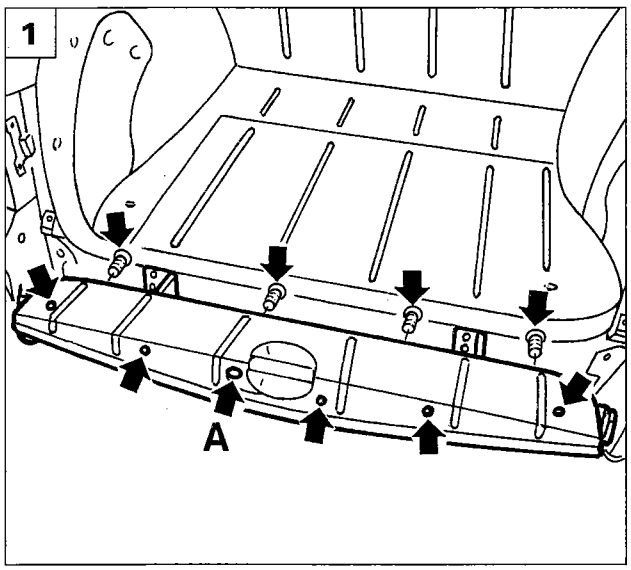

P4F033M01

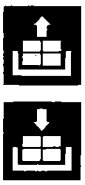

REMOVING-REFITTING REAR BUMPER OPENING IDLER MECHANISM

1. Acting on the button (A), lower the bumper.
- Undo the bolts shown and remove the cover.
2. Disconnect the two rods (A).
- Undo the nut (B) and extract the rear bumper opening idler mechanism.

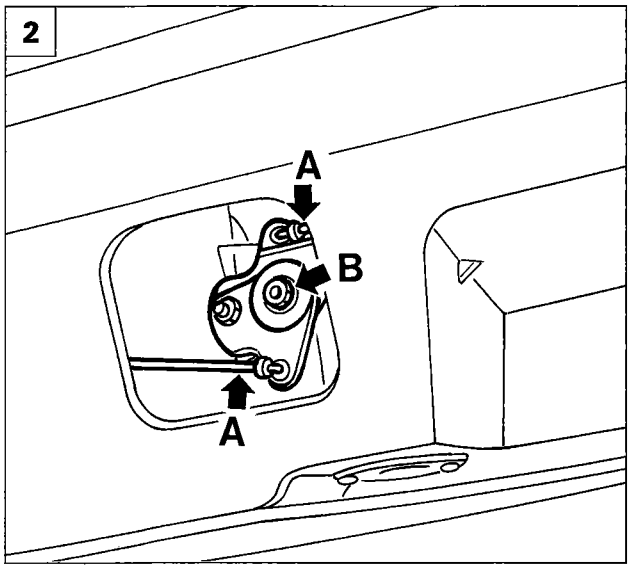

P4F033M02

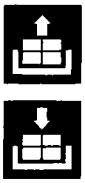

Adjusting the rear bumper opening idler mechanism

3. Loosen the nut (A) then slide the lever (B) onto the lever (C) for adjusting the idler.
- When the adjustment has been carried out, fully tighten the nut (A).

REMOVING-REFITTING FOLDING REAR BUMER LOCKS

- Remove the folding rear bumper as described on the previous page.
4. Undo the bolts shown and remove the cover.

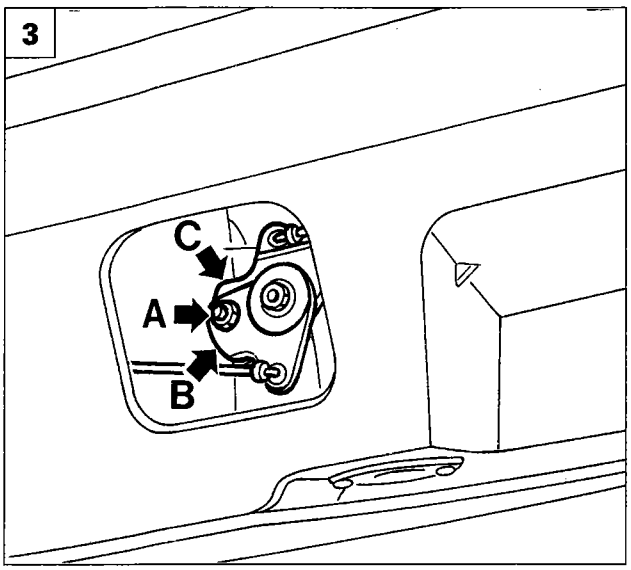

P4F033M03

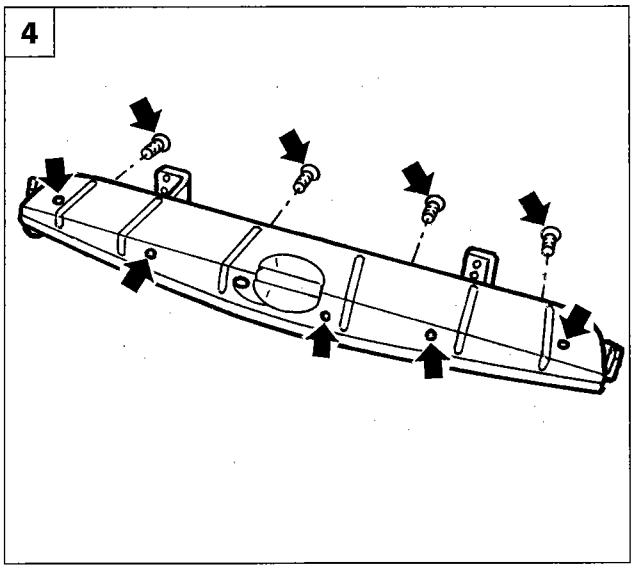

P4F033M04

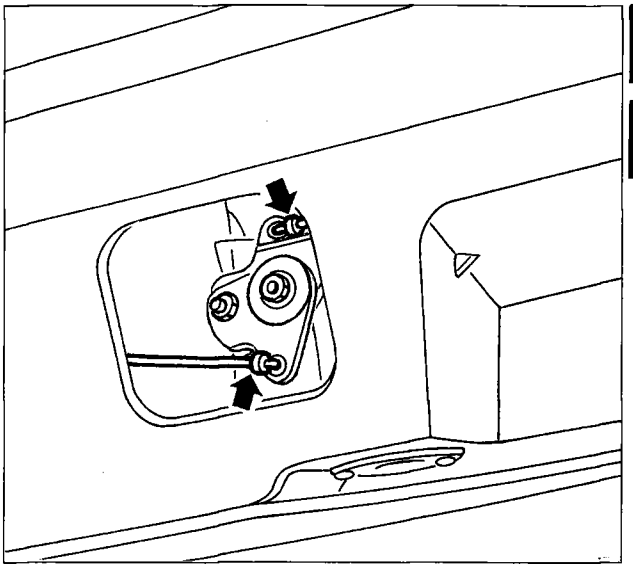

P4F034M01

- Disconnect the rod concerned from the idler mechanism.
- Undo the bolts shown and remove the lock with the rod.

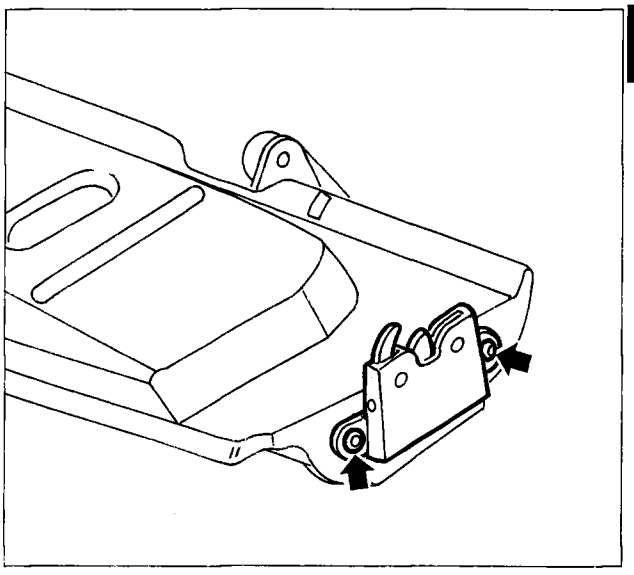

P4F034M02

Adjusting position of folding bumper lock

NOTE *Carry out the adjustment with the folding bumper fitted on the vehicle.*

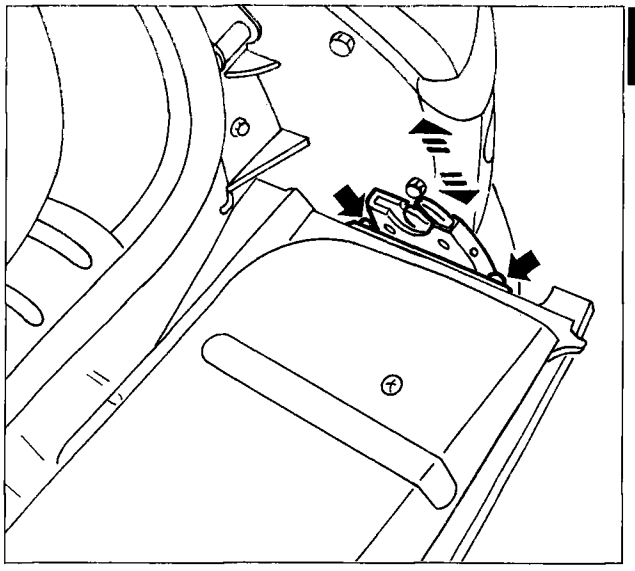

P4F034M03

- Loosen the bolts shown, then adjust the position of the lock.

NOTE The arrows indicate the possible movements for the adjustment.

- When the adjustment has been carried out, fully tighten the lock fixing bolts.

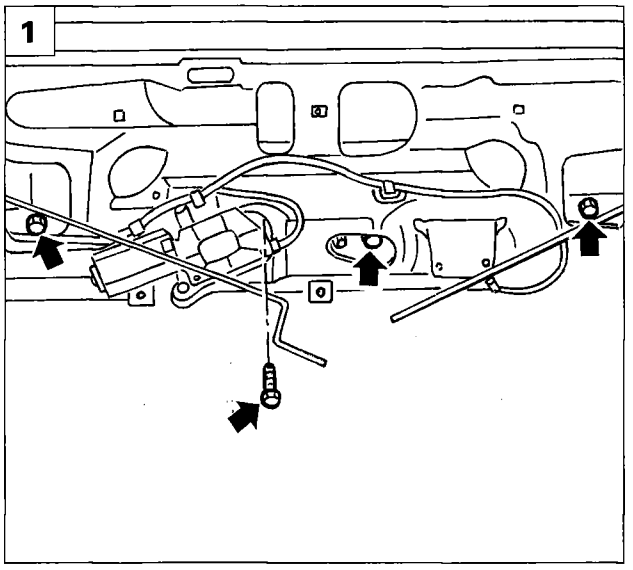

P4F035M01

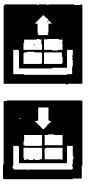

REMOVING-REFITTING NUMBER PLATE LIGHT HOLDER AND LOCK

- Remove the idler for the rear rear tailgate locks, following the instructions given on the previous pages.

1. Undo the bolts fixing the number plate light holder and lock.
2. Undo the outer bolts (A) and move the number plate light holder and lock assembly slightly.
3. Disconnect the connectors (A) and remove the number plate light holder and lock assembly.

NOTE *To refit, simply reverse the order of the operations carried out for the removal.*

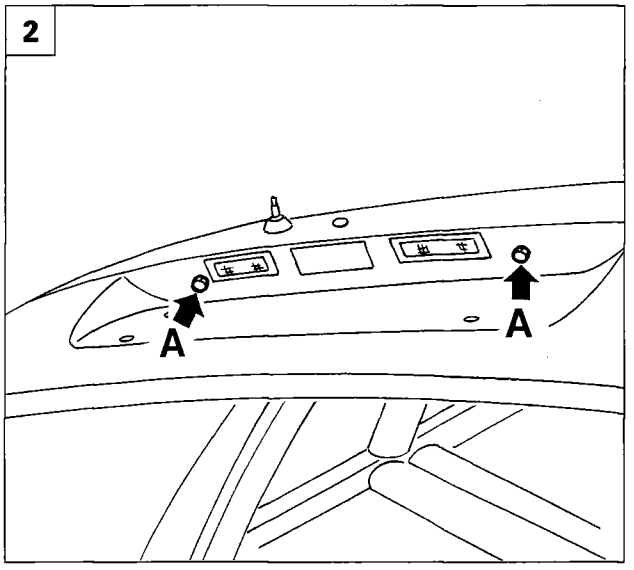

P4F035M02

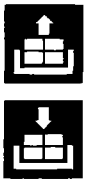

REPLACING REAR TAILGATE LOCK BARREL

- Remove the number plate light holder and lock assembly, following the instructions given above.

4. Undo the bolts (A) and remove the lock assembly.
   Using a screwdriver, extract the spring (B) and remove the lock barrel (C).

NOTE *To refit, simply reverse the order of the operations carried out for the removal.*

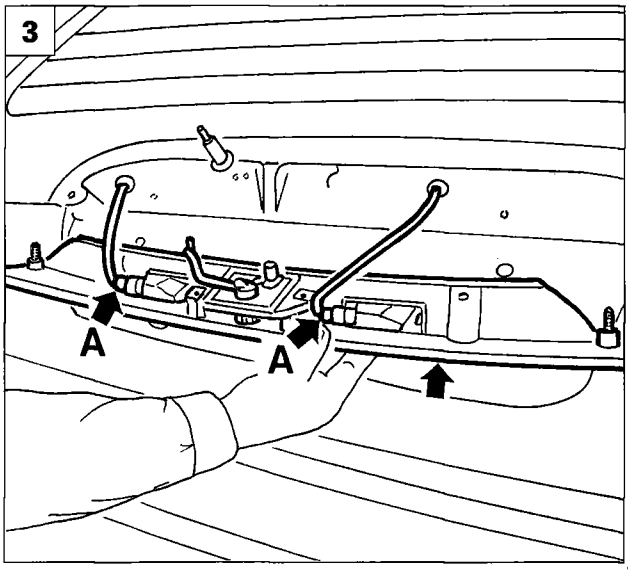

P4F035M03

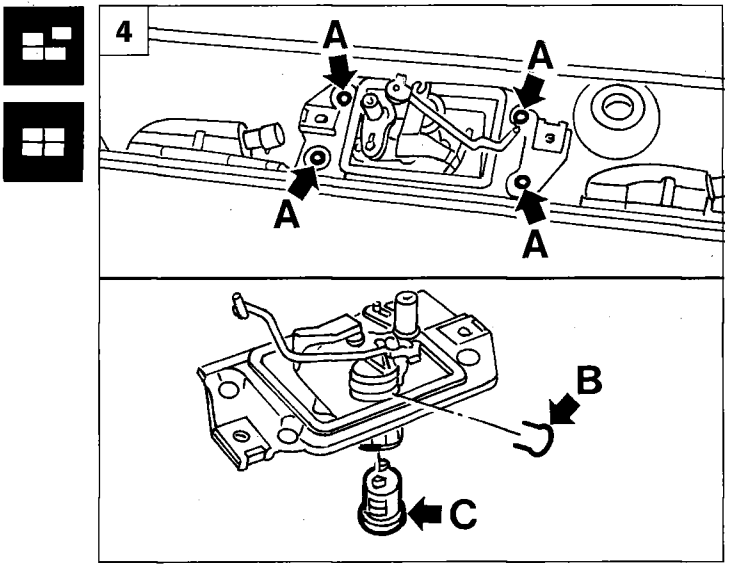

P4F035M04

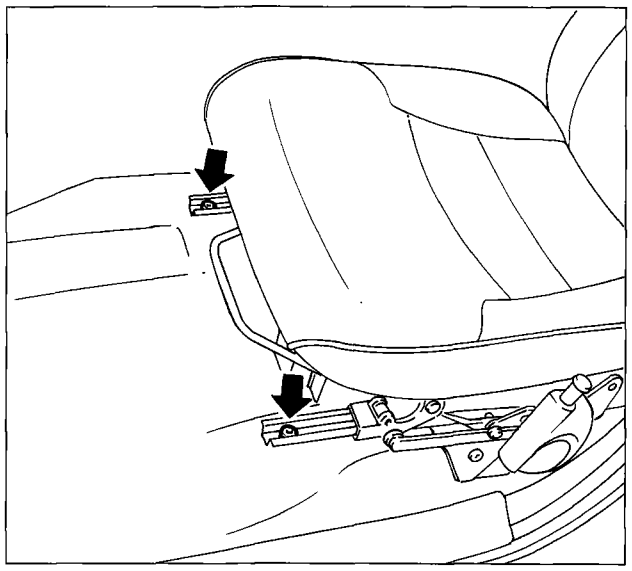

P4F036M01

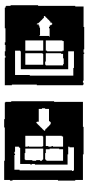

REMOVING-REFITTING FRONT SEAT

Order of operations

- Place the seat in the "completely backwards" end of travel position, then undo the bolts fixing the seat guides to the floor;

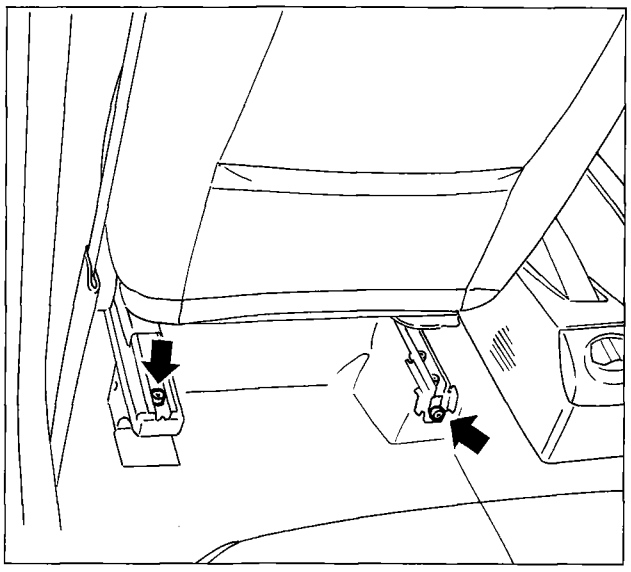

P4F036M02

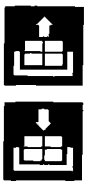

- place the seat in the "completely forwards" end of travel position, then undo the bolts fixing the seat guides to the floor;

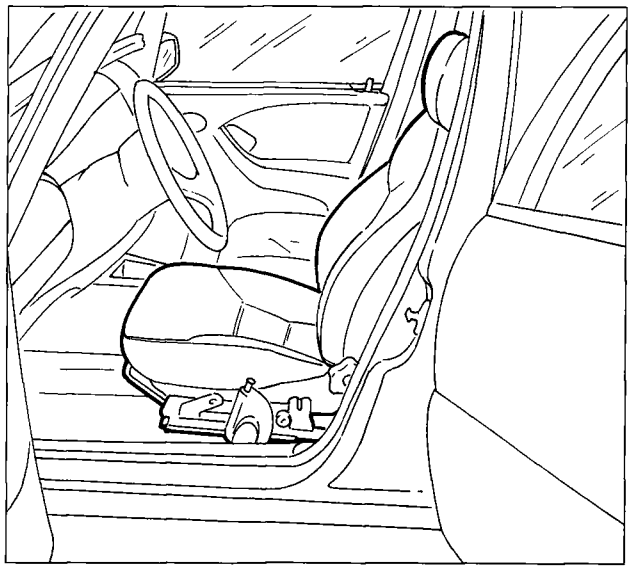

P4F036M03

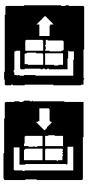

- remove the seat from the vehicle.

NOTE *To refit simply reverse the order of the operations carried out for the removal.*

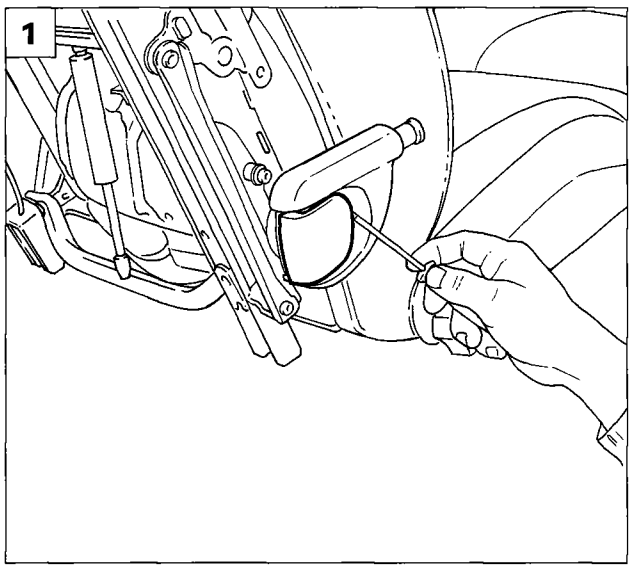

P4F39AM01

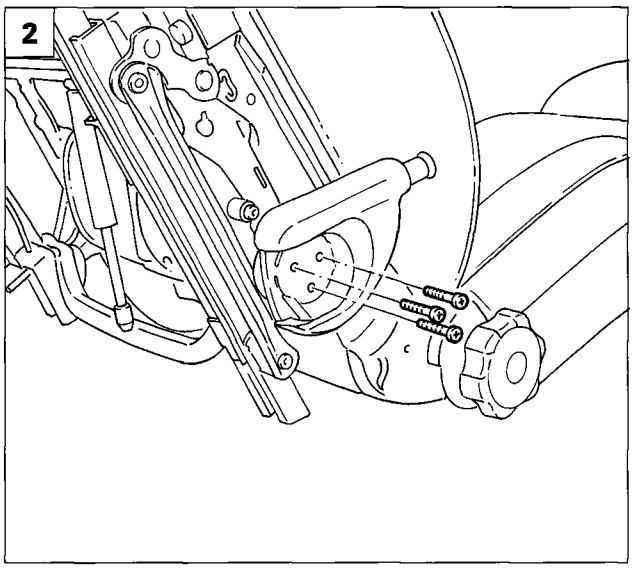

P4F39AM02

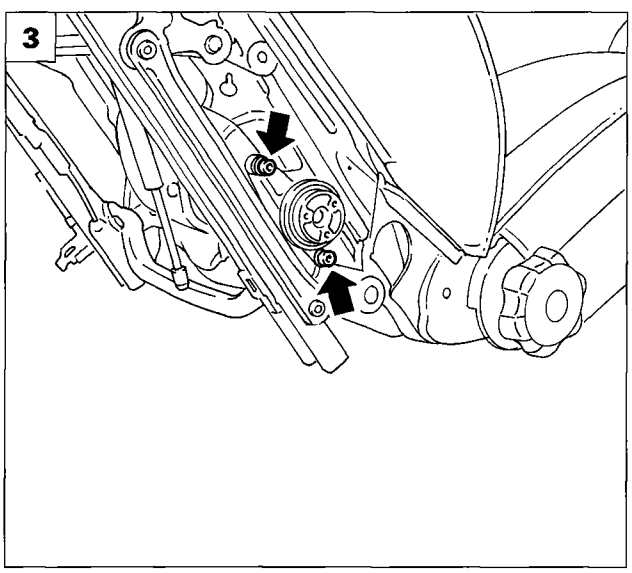

P4F39AM03

DISMANTLING-REASSEMBLING FRONT SEAT

The seat is shown without the side trims; they should be removed after the adjustment lever and the seat belt attachment system have been removed.

1. Remove the fixing cover for the vertical seat adjustment lever, acting on the retaining tabs.
2. Remove the vertical seat adjustment lever undoing the fixing bolts.
3. Remove the vertical seat adjustment unit undoing the fixing bolts.
4. Remove the attachment system for the seat belt undoing the fixing bolt.
5. Remove the backrest angle adjustment knob after having removed the fixing cap.

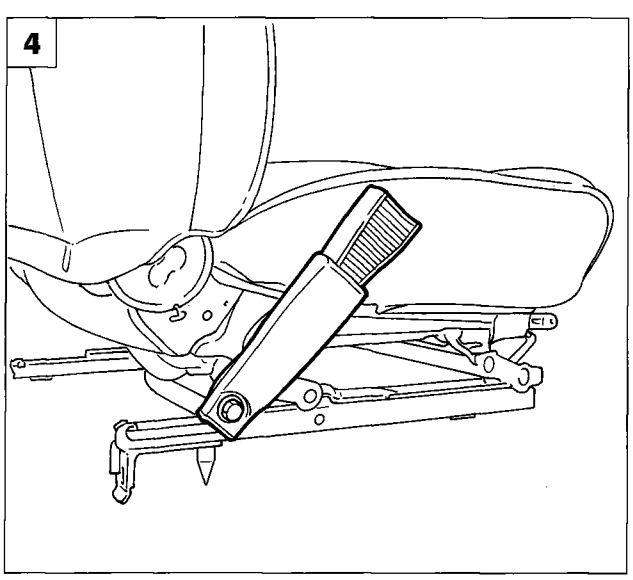

P4F39AM04

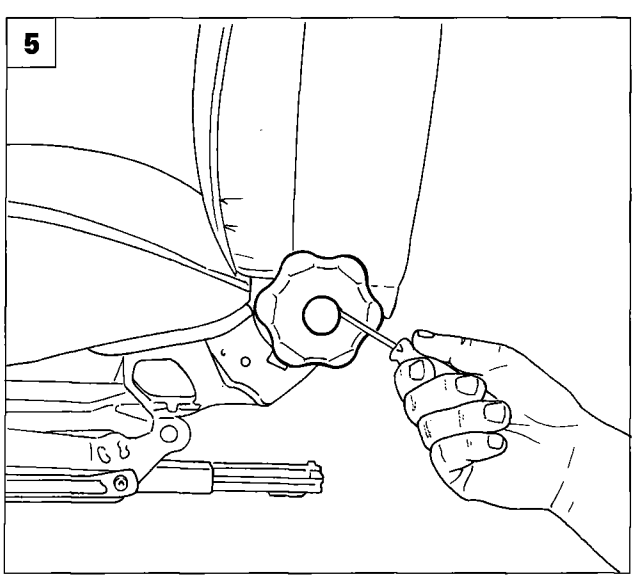

P4F39AM05

70.

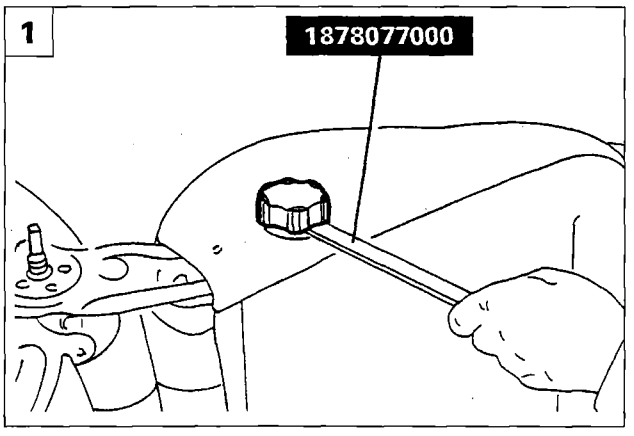

P4F40AM06

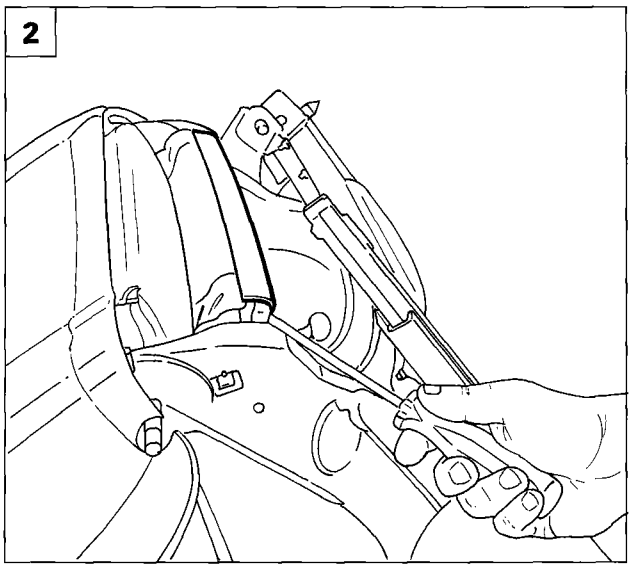

P4F40AM01

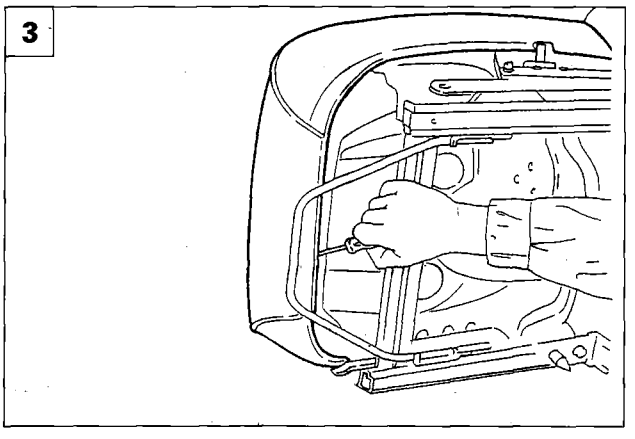

P4F40AM07

1. Using tool 1878077000, remove the "lumbar" adjustment knob (▲).
   Release the edge of the seat covering from the attachment system.
3. Remove the covering and the lining of the cushion from the seat frame.
4. Acting at the points shown, remove the tensioning spring under the seat frame.
5. Undo the front bolts fixing the sliding seat guides.
6. Remove the sliding guides after having undone the rear fixing bolts.

(▲) Only on the ELX version from chassis 0107413.

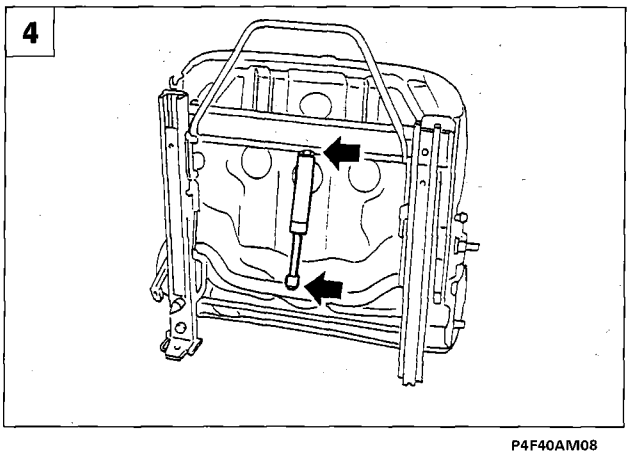

P4F40AM08

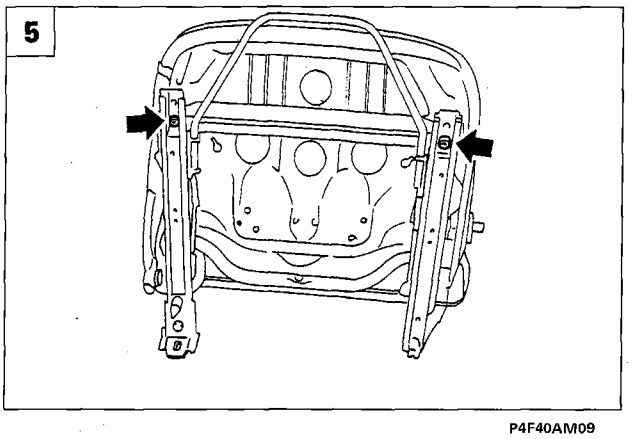

P4F40AM09

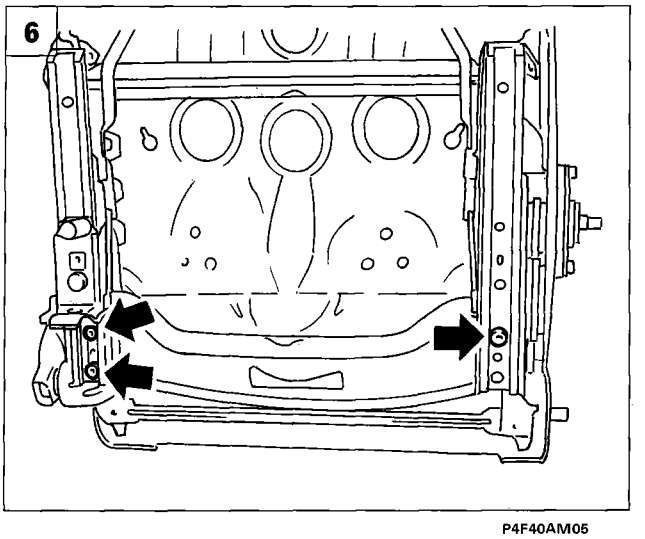

P4F40AM05

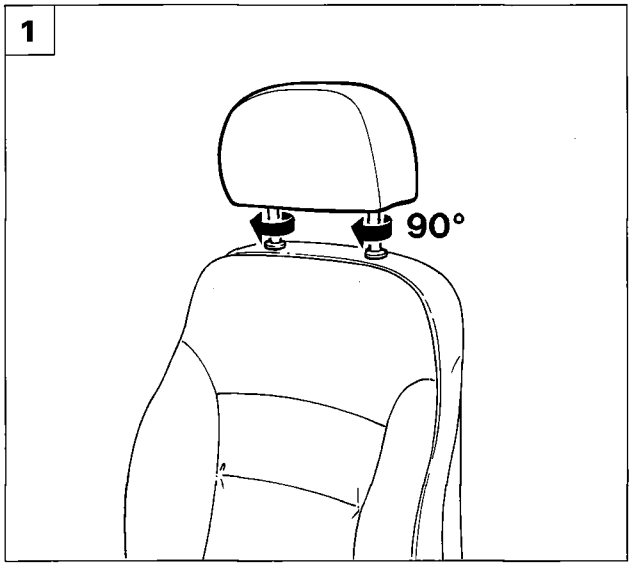

P4F41AM01

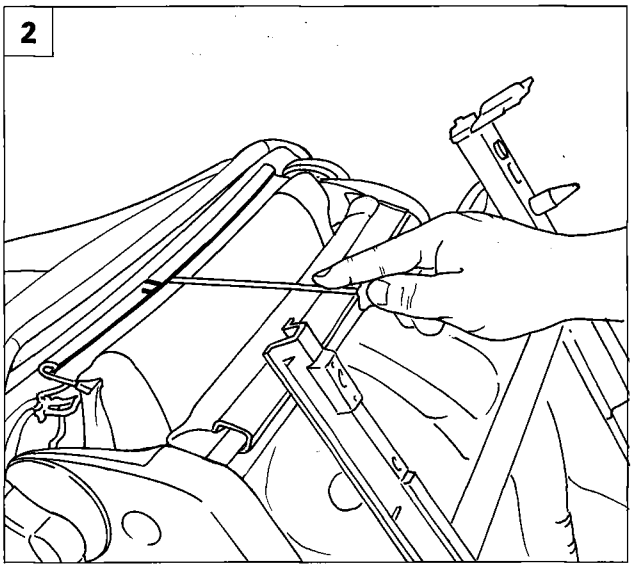

P4F41AM02

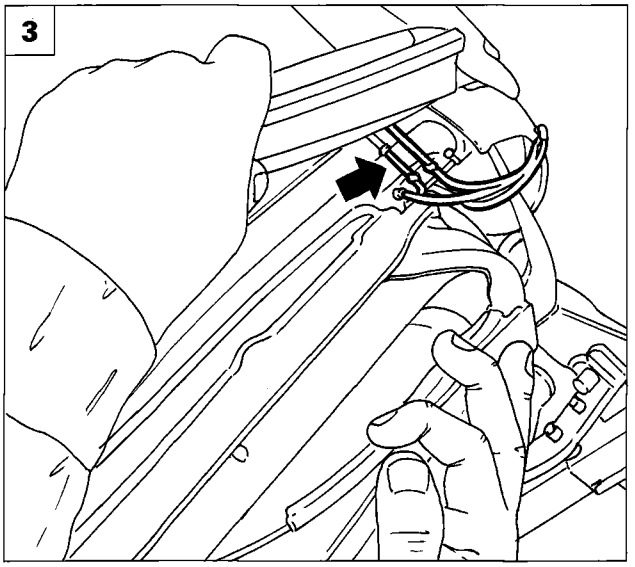

P4F41AM03

1. Lift up the head restraint, rotate the supports through 90° to allow the release of the pin then remove the head restraint from the backrest.
2. Remove the edge of the backrest covering from the attachment system.
3. Disconnect the tensioning rods from the seats.
4. Disconnect the hooks for the covering from the backrest frame.
5. Remove the backrest covering and upholstering from the seat frame.

NOTE *To refit, suitably reverse the order of the operations carried out for the removal.*

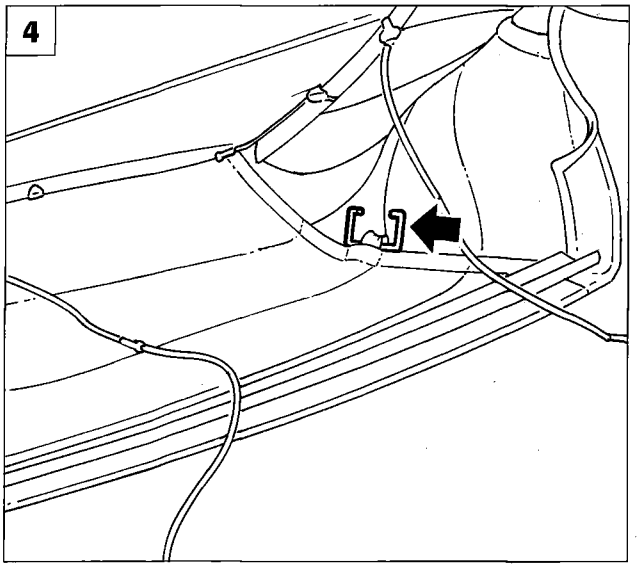

P4F41AM04

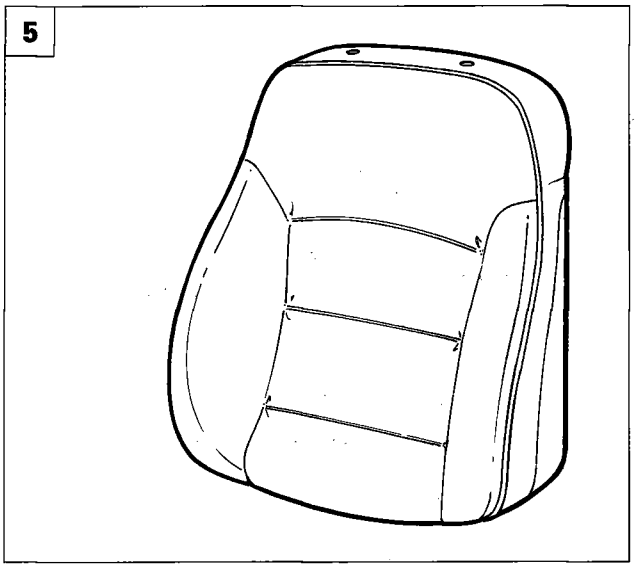

P4F41AM05

Copyright by Fiat Auto

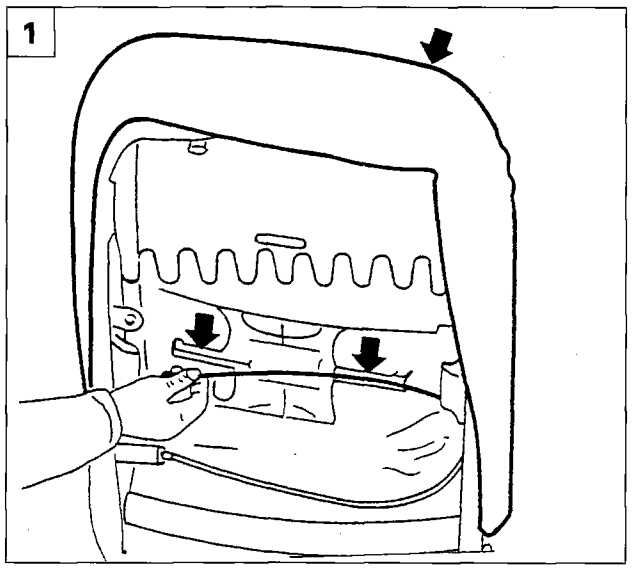

P4F040M04

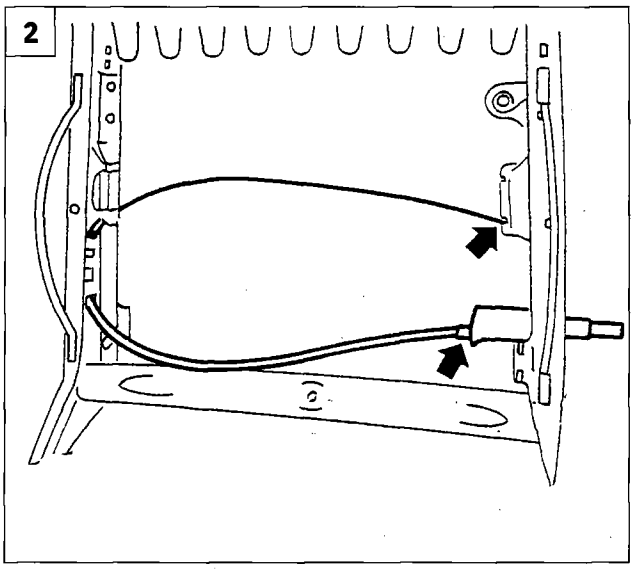

P4F040M05

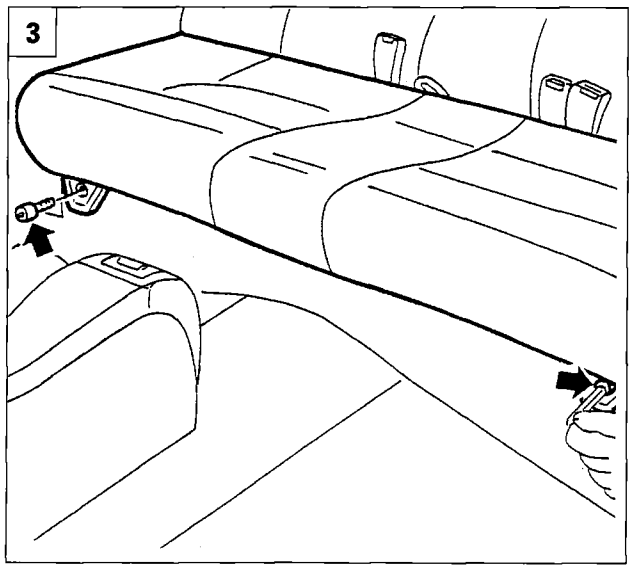

P4F040M06

Replacing "lumbar" control cable (▲)

- Release the "lumbar" control cablefrom the attachment housings shown and remove it.
- Release the "lumbar" adjustment control cable from the sliding seats shown, then remove the backrest upholstery.

REMOVING-REFITTING FRONT SEAT

- Undo the bolts fixing the cushion to the bodyshell, then remove it from the vehicle.
- Undo the bolt (A) fixing the backrest, then lift it upwards to release it from the retainers and remove it.
- To facilitate the removal of the backrest, after having undone the fixing bolt (A), use a lever on the side retainers (B).

NOTE *To refit, simply reverse the order of the operations carried out for the removal.*

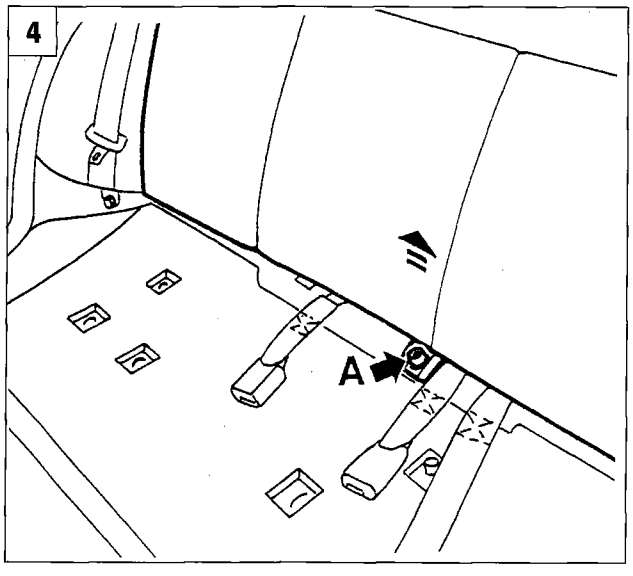

P4F040M07

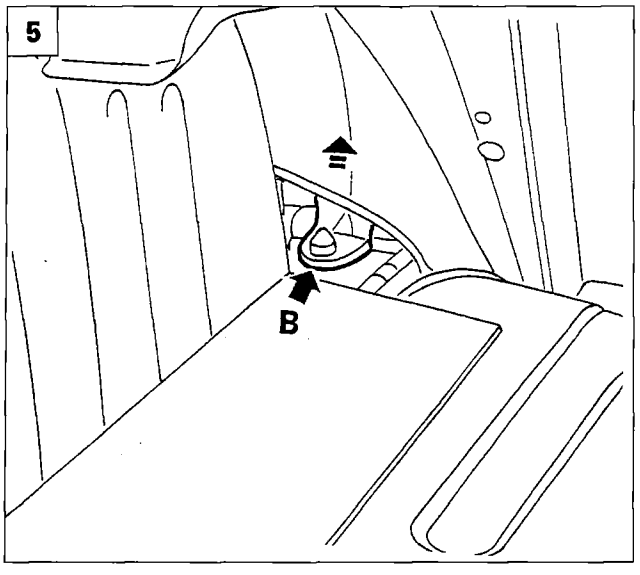

P4F040M08

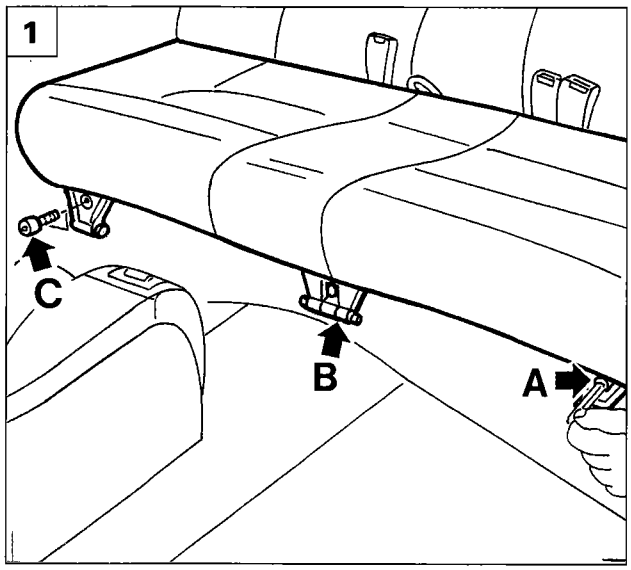

P4F041M01

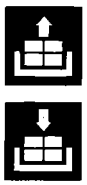

REMOVING-REFITTING REAR SEAT

1. Undo the bolt (A) and extract the left seat releasing it from the pin (B).
   If necessary, loosen the pin bolt (B).

- Proceed in the same way for the right seat, undoing bolt (C) instead of (A).

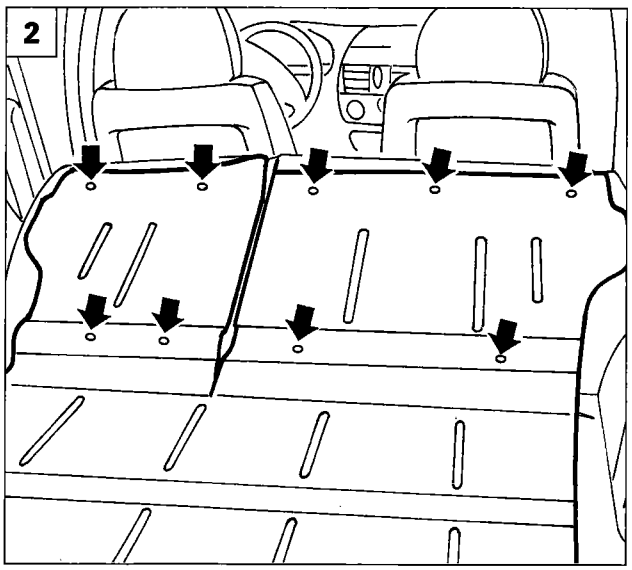

P4F041M02

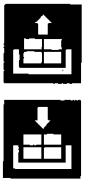

2. Lower the backrest, then undo the bolts fixing the luggage compartment covering to the backrest.
3. Undo the bolts fixing the backrest to the folding bracket.
4. Remove the backrest from the vehicle.

NOTE *To refit, simply reverse the order of the operations carried out for the removal.*

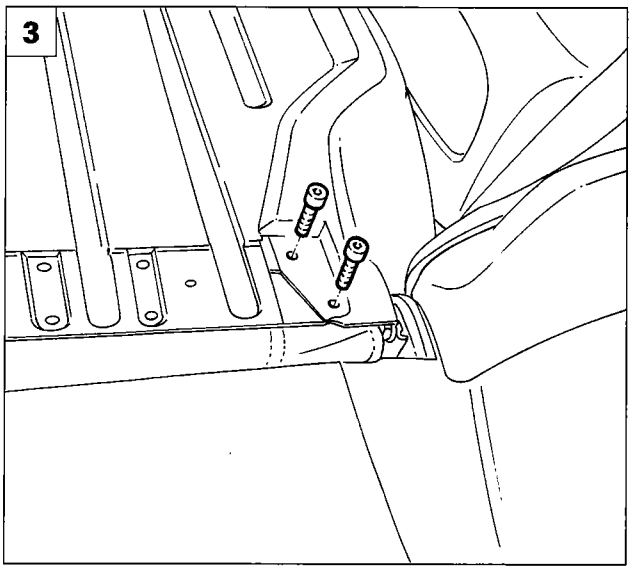

P4F041M03

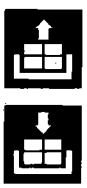

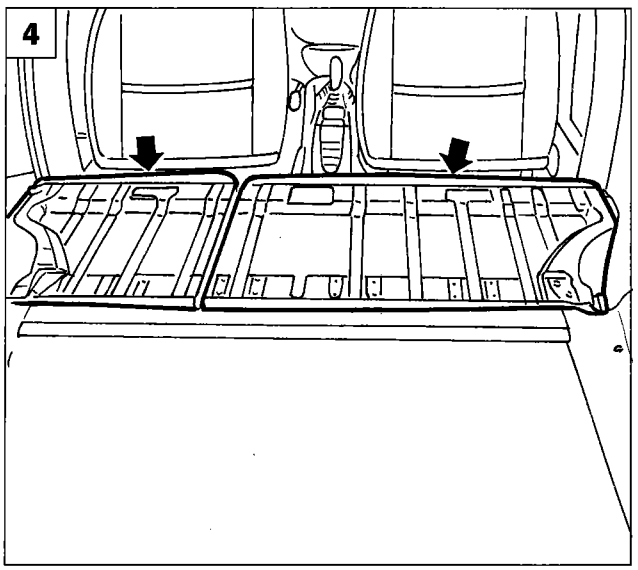

P4F041M04

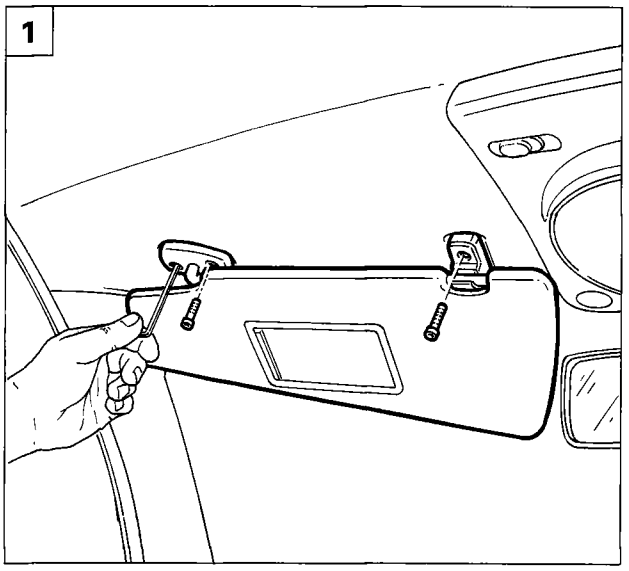

P4F042M01

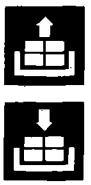

REMOVING-REFITTING SUN VISORS AND ATTACHMENTS

1. Loosen the fixing bolts shown and remove the sun visors and attachment systems.

REMOVING-REFITTING FRONT PILLAR COVER

2. Move the door seal by the pillar cover aside.

- Using tool 1878077000, release the front pillar cover from the retainers.

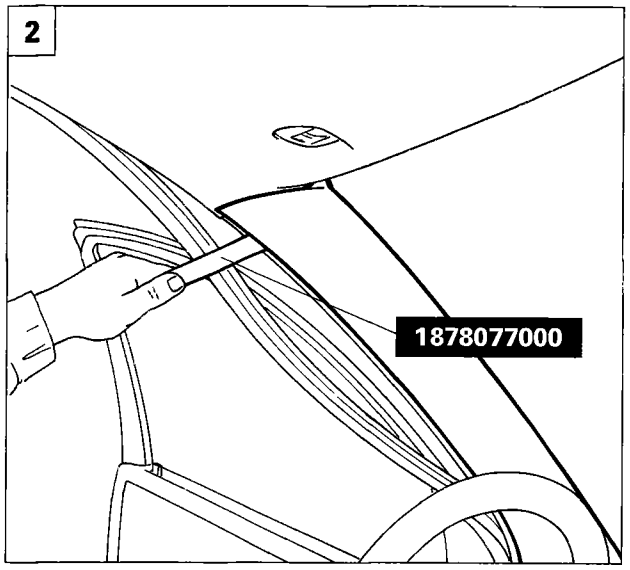

P4F042M02

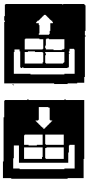

REMOVING-REFITTING FRONT/REAR PASSENGER GRAB HANDLES

3. Remove the fixing covers and undo the bolts underneath, then remove the passenger grab handles.

REMOVING-REFITTING ROOF LINING FIXING FRONT COVERS

4. Using tool 1878077000, remove the covers.

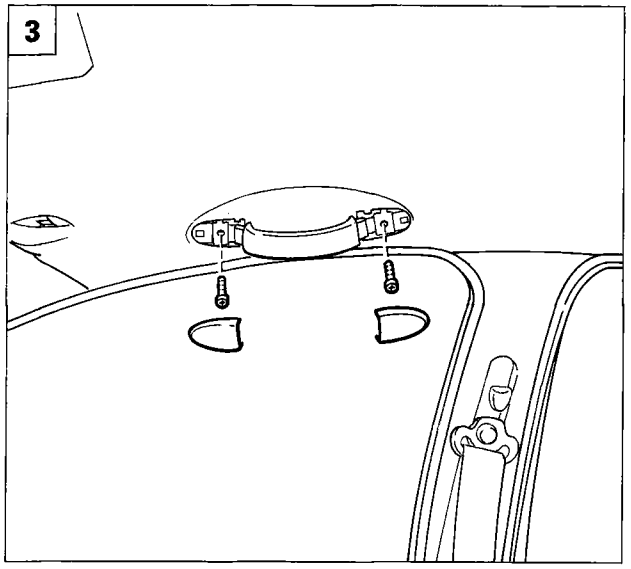

P4F042M03

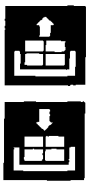

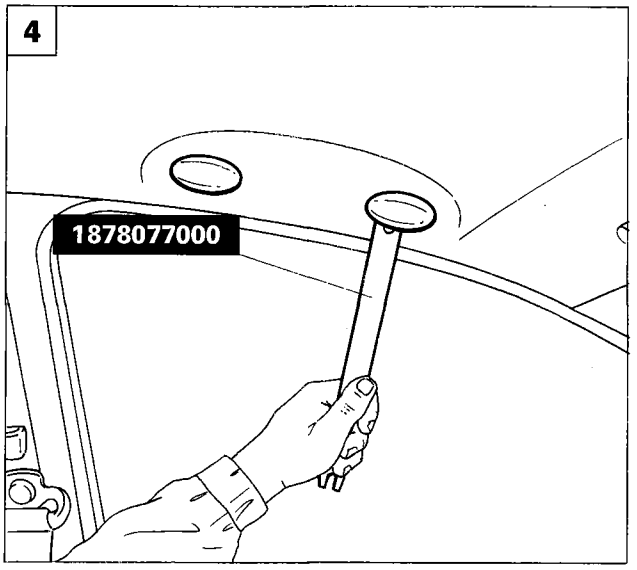

P4F042M04

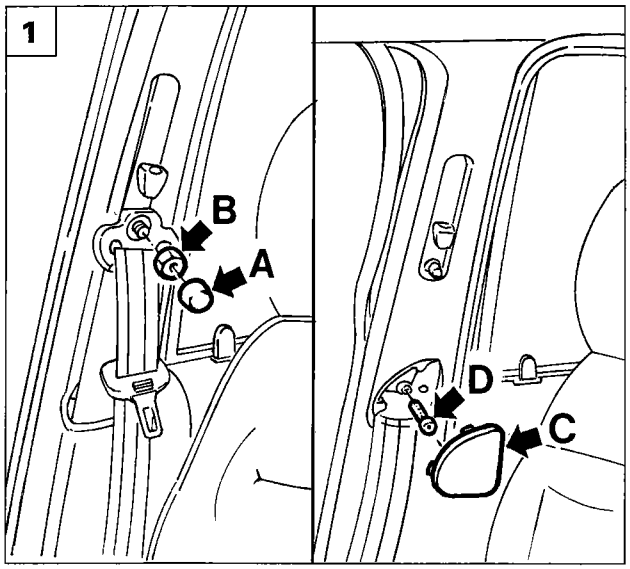

P4F043M01

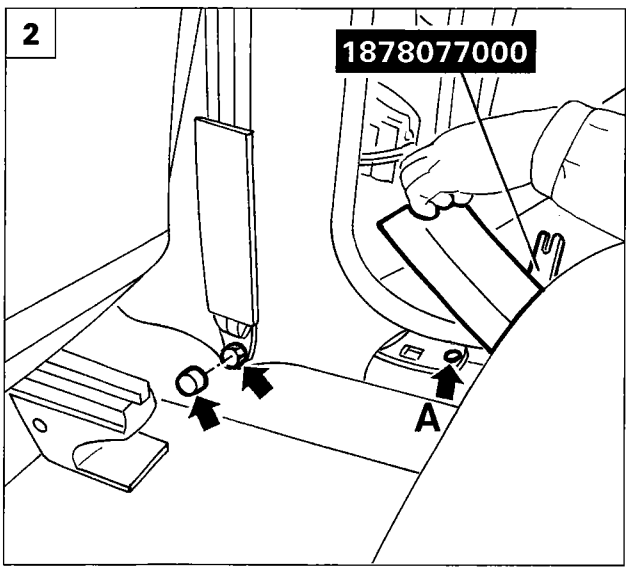

P4F043M02

REMOVING-REFITTING CENTRE PILLAR COVER

1. Remove the fixing cover (A) and undo the height adjustment nut (B) for the front seat belt.
   Remove the bolt cover (C), then undothe fixing bolt (D) for the pillar cover.
2. Remove the fixing cover and undo the bolt fixing the front seat belt. Using tool 1878077000, release and raise the rear running board, then undo the bolt (A) fixing the pillar cover.
3. Undo the front bolt under the dashboard for the running board, then, using tool 1878077000, release and raise the front running board. Undo the bolt (A) fixing the pillar cover.
4. Move the door seals (A) and (B) by the pillar cover aside, then remove the centre pillar cover using tool 1878077000.

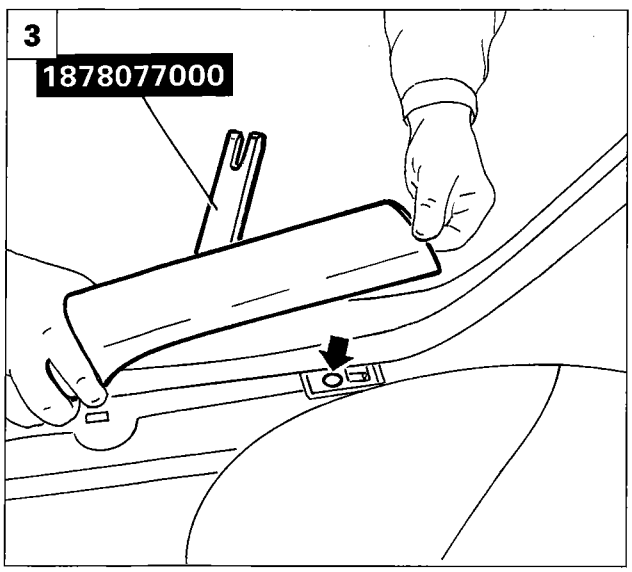

P4F043M03

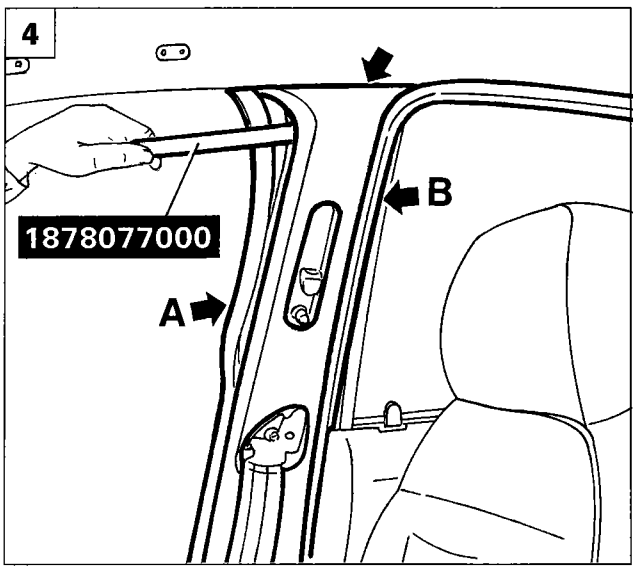

P4F043M04

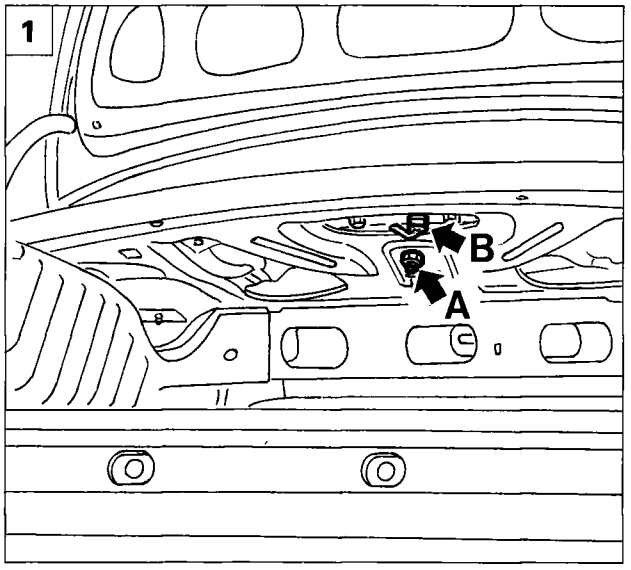

P4F044M01

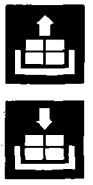

REMOVING-REFITTING REAR PARCEL SHELF

- Remove the rear seat, as described in the specific paragraph.
- Remove the rear speakers as described in Section 55 (Electrical equipment).

1. Open the boot lid and undo the nut (A). Disconnect the connector (B) for the 3rd brake light.
2. Undo the bolts (A) and remove the rear parcel shelf releasing it from the rear seat belts.

NOTE *To refit, simply reverse the order of the operations carried out for the removal.*

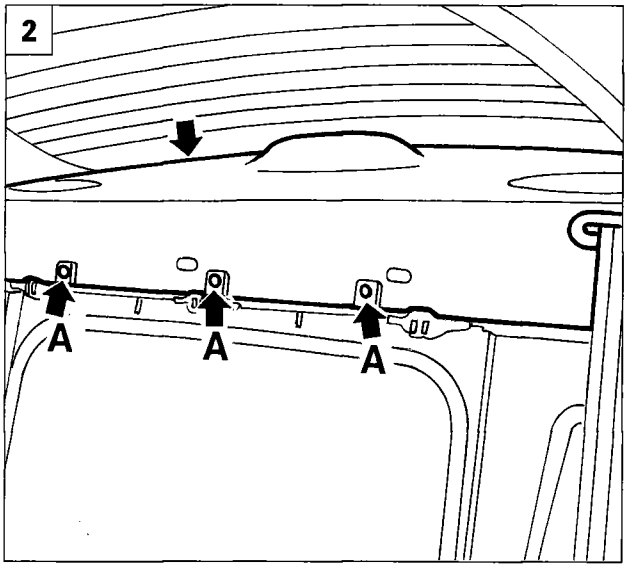

P4F044M02

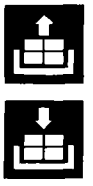

REMOVING-REFITTING REAR PILLAR COVER

- Remove the rear parcel shelf following the instructions given above.

3. Undo the bolts for the rear pillar cover.
4. Move the door seal aside by the pillar cover, then remove the rear pillar cover, using tool 1878077000.

NOTE *To refit, simply reverse the order of the operations carried out for the removal.*

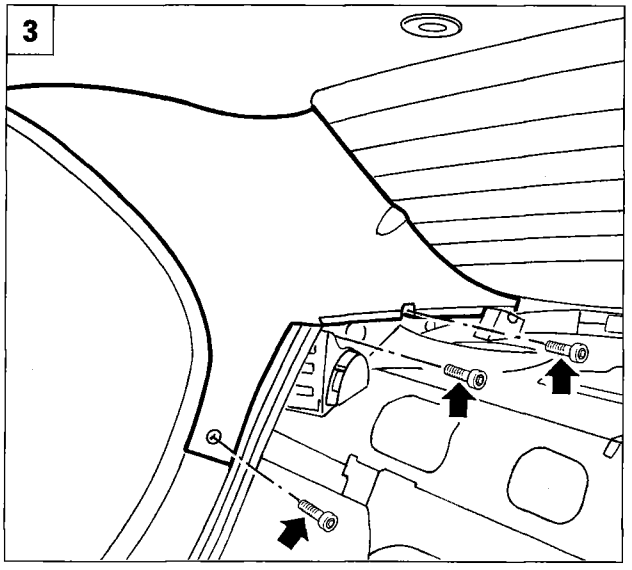

P4F044M03

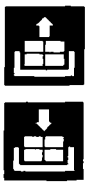

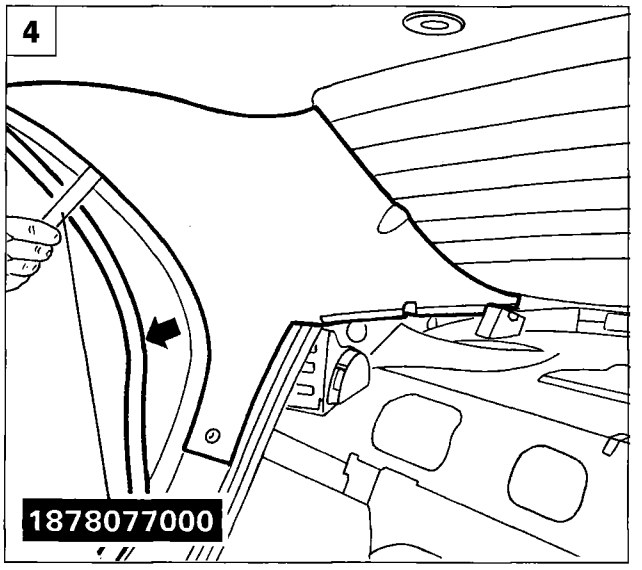

P4F044M04

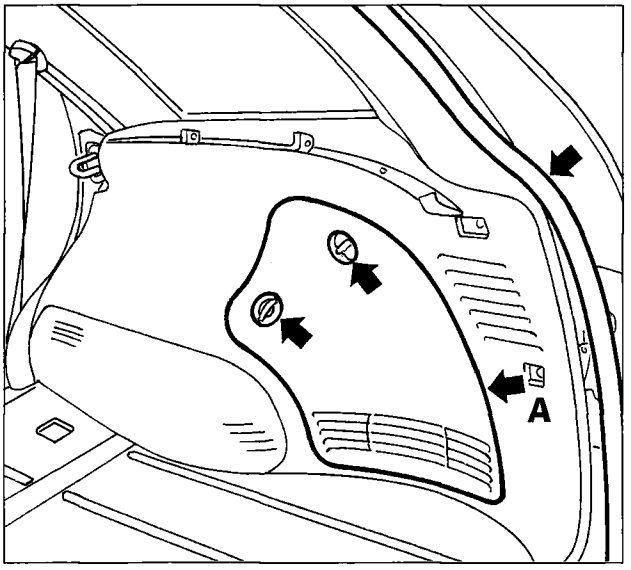

P4F045M01

REMOVING-REFITTING SIDE LUGGAGE COMPARTMENT COVERING

- Remove the luggage compartment covering cloth.
- Lower the moving rear bumper.
- Lower the rear seat backrest.
- Release the retainers and remove the cover (A).
- Move the tailgate housing seal aside by the luggage compartment cover.

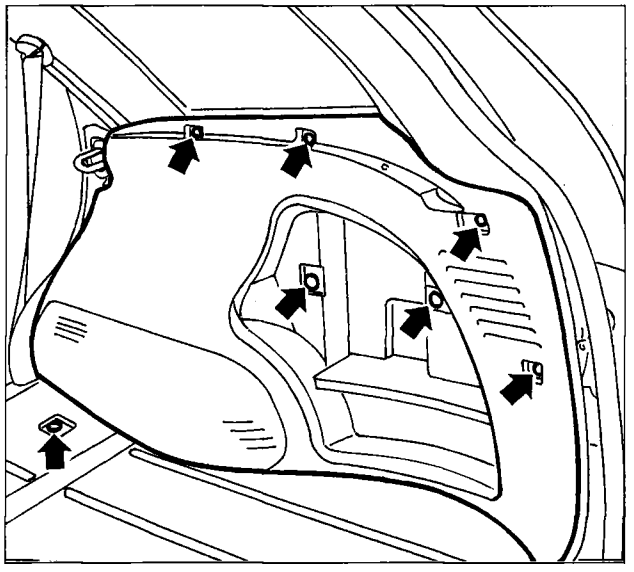

P4F045M02

- Undo the bolts fixing the luggage compartment cover and remove it.

NOTE *To refit, simply reverse the order of the operations carried out for the removal.*

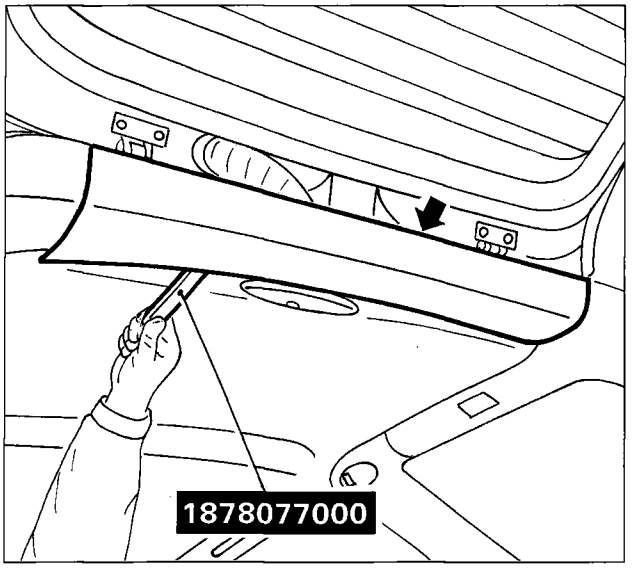

P4F045M03

REMOVING-REFITTING UPPER LUGGAGE COMPARTMENT COVERING

- Using tool 1878077000, remove the upper cover releasing it from the retaining springs.

NOTE *To refit, simply reverse the order of the operations carried out for the removal.*

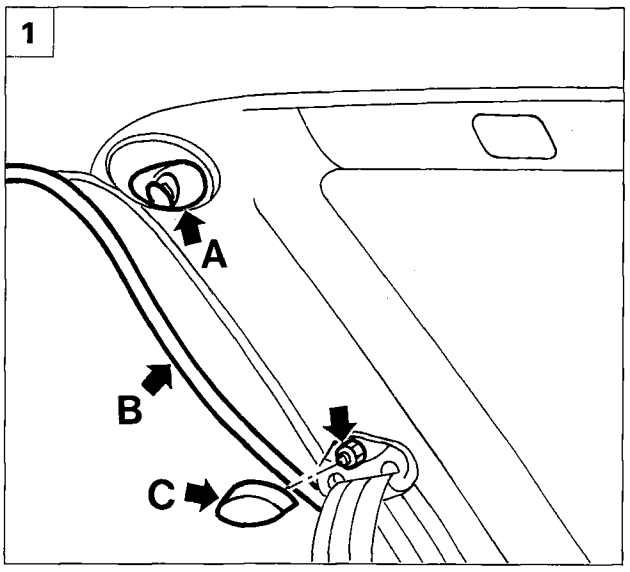

P4F046M01

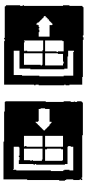

REMOVING-REFITTING LUGGAGE COMPARTMENT PILLAR COVERS

- Remove the rear speakers, as described in the specific paragraph.

1. Release the central plate with clothes hook (A). Undo the bolt underneath and remove the frame.

- Movethe door housing seal (B) by the pillar cover.
- Remove the cowling (C) and undo the nut underneath fixing the seat belt idler.

2. Remove the trim (A).
   Undo the bolts shown and remove the luggage compartment pillar cover.

NOTE *To refit, simply reverse the order of the operations carried out for the removal.*

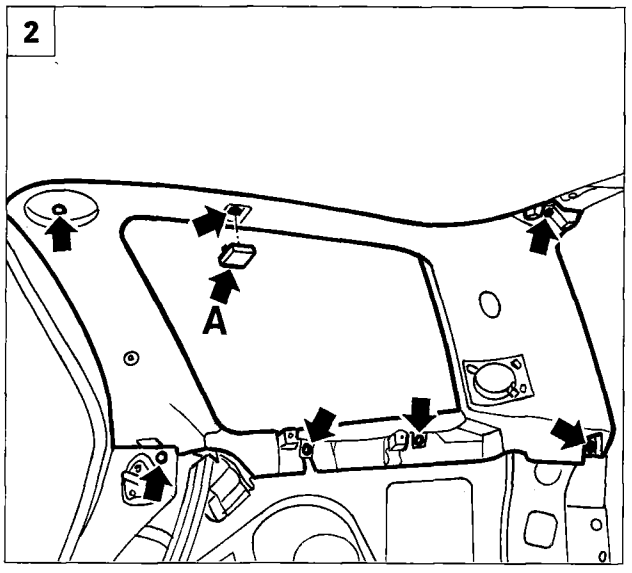

P4F046M02

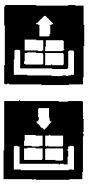

REMOVING-REFITTING REAR SEAT SIDE COVER

- Fold over the rear seat and lower the backrest.

3. Undo the bolts (A) retaining the cover.. Remove the door housing seal by the cover.
4. Remove the fixing cover and undo the bolt fixing the rear seat belt, then remove the side cover for the rear seat.

NOTE *To refit, simply reverse the order of the operations carried out for the removal.*

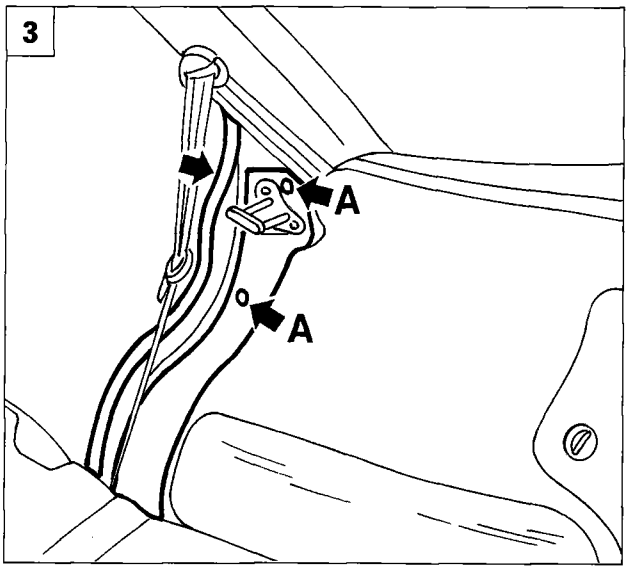

P4F046M03

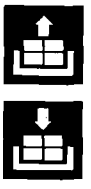

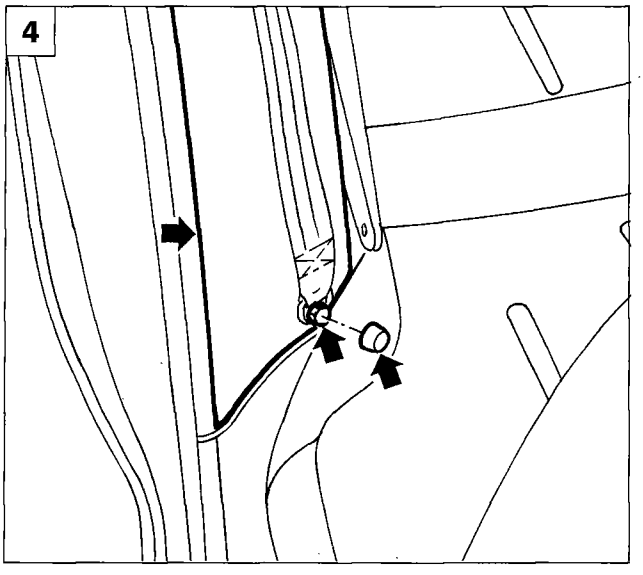

P4F046M04

REMOVING-REFITTING ROOF LINING

Dismantling the vehicle

Remove the parts shown in the diagram; for the removal procedures, see the specific paragraphs. The parts are numbered in the dismantling order.

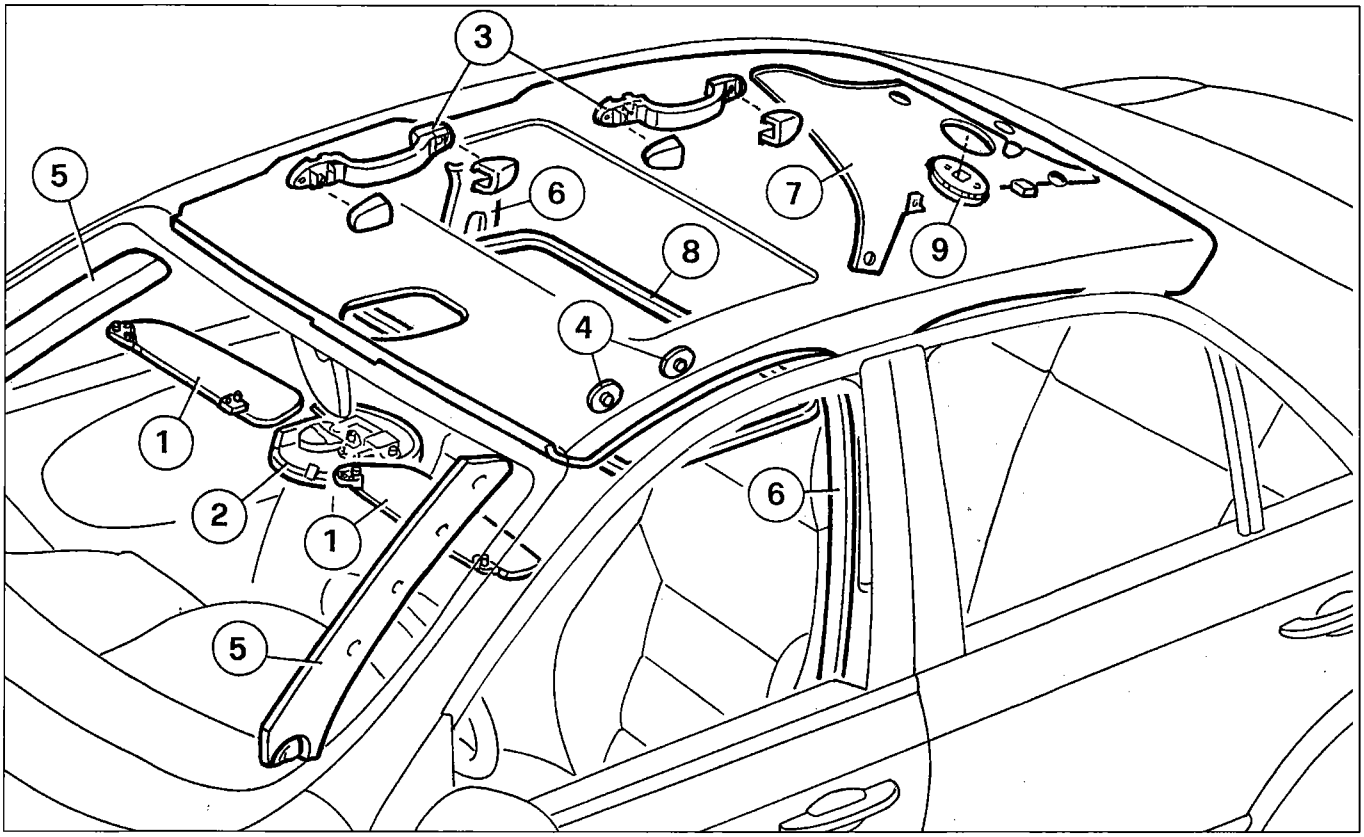

P4F047M01

1. Sun visors and attachments
2. Front courtesy light
3. Grab handles
4. Roof lining fixing trims
5. Front pillar covers
6. Centre pillar covers
7. Rear pillar covers
8. Sun roof trim
9. Rear courtesy light

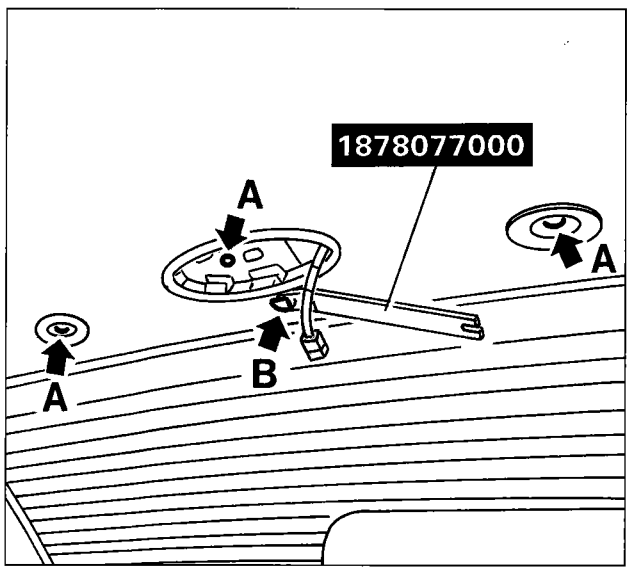

P4F25AM02

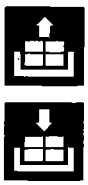

- Working from the rear of the roof panel, undo the bolts (A) and remove the retainer (B) using tool 1878077000.

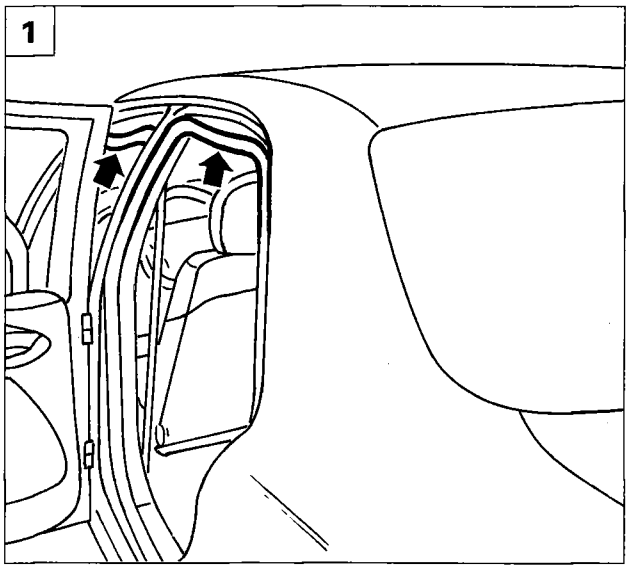

P4F048M01

1. Working from both sides of the vehicle, move the door seals aside by the roof lining.

Removing the roof lining

NOTE *In the versions with a sun roof, the lining is not stuck to the roof panel.*

2. Heat the roof, positioning an infra red lamp on the outside of the vehicle to assist the separation of the lining from the roof.

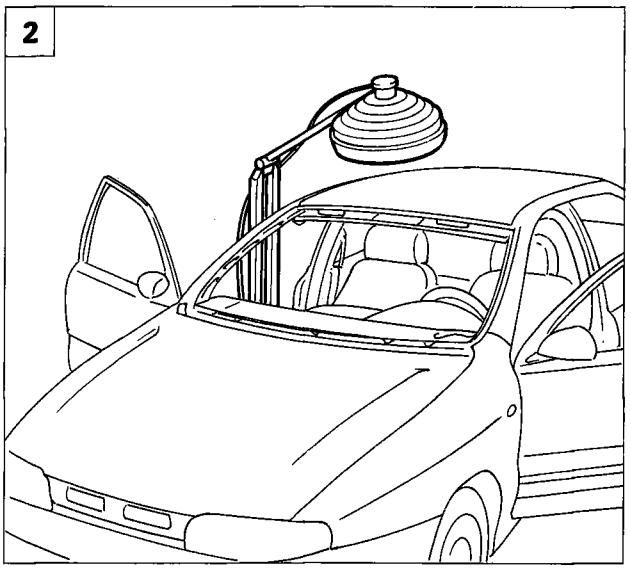

P4F37AM01

Avoid the temperature exceeding 90° C in order not to damage the paint.

3. Cut the lining in a longitudinal direction to allow the subsequent removal from the roof panel, then extract it.

Do not pull the lining downwards in order not to distort the roof.

Refitting the roof lining

4. For the version with a sun roof it is not necessary to stick the roof lining.

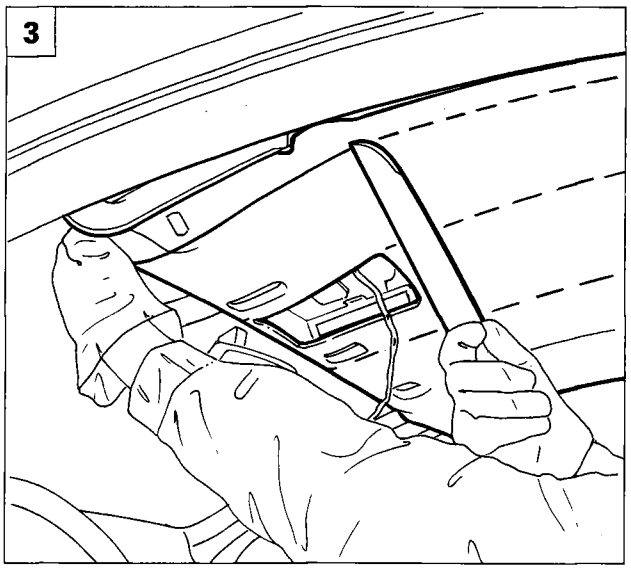

P4F37AM02

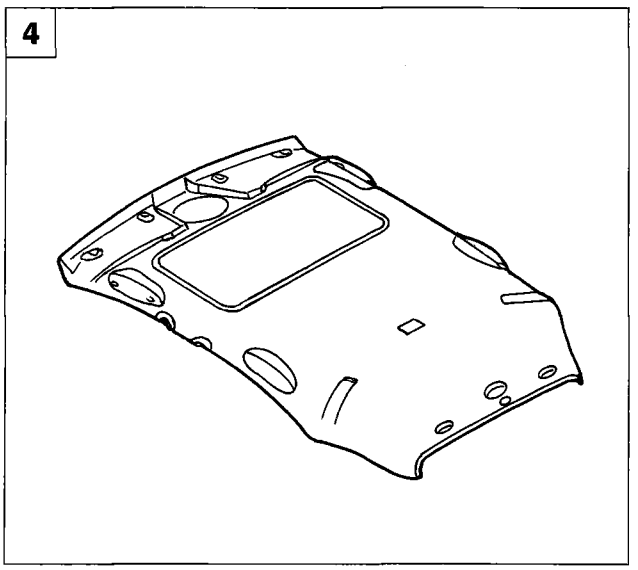

P4F38AM04

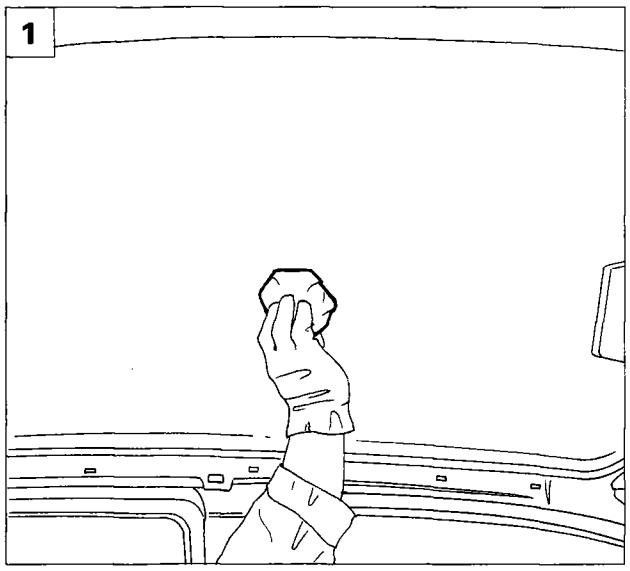

P4F37AM03

1. Thoroughly clean the roof using paper soaked in heptane.
2. Apply the recommended adhesive in the areas which are shaded in the diagram, sticking to the measurements given.

NOTE *It is advisable to use a water based adhesive such as TIVOCOLL 4769/59 made by GURIT or ESSEX.*

Heat the roof lining for about 5 - 6 minutes using an infra red lamp.

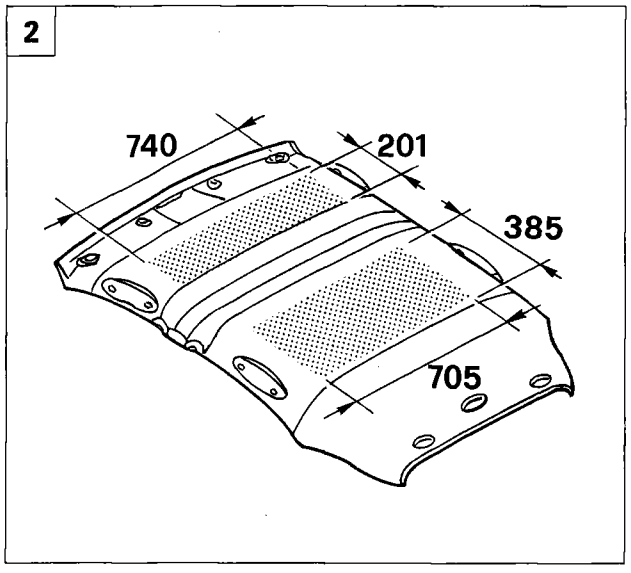

P4F38AM01

Avoid the temperature exceeding 90° C.

3. Place the lining in position, without pushing it completely into place.
- Fit the passenger grab handles and the roof lining fixing trims.
4. Press on the lining to make it stick to the roof, starting from the centre working towards the edges, then completely tighten the handle fixing bolts.
- Complete the refitting, by suitably reversing the operations carried out for the removal.

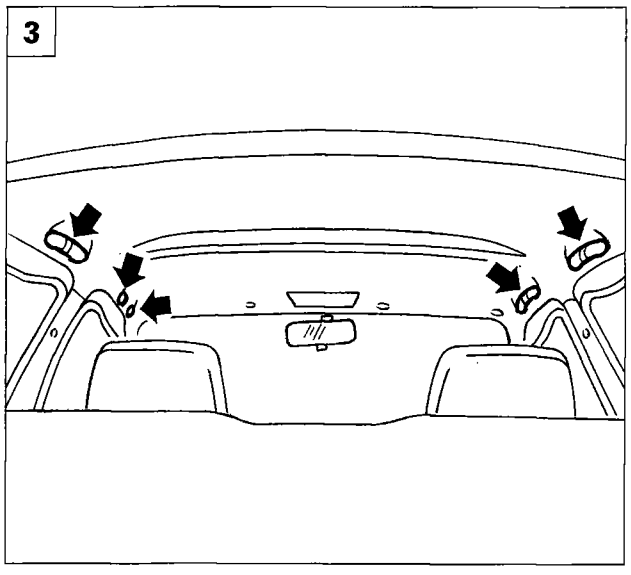

P4F38AM02

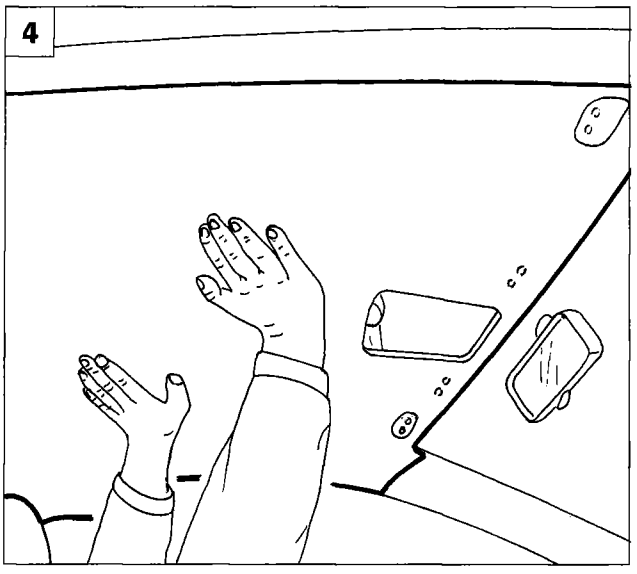

P4F38AM03

Copyright by Fiat Auto

REMOVING-REFITTING THE ROOF LINING

Dismantling the vehicle

Remove the parts shown in the diagram; for the removal procedures, see the specific paragraphs. The parts are numbered in the dismantling order.

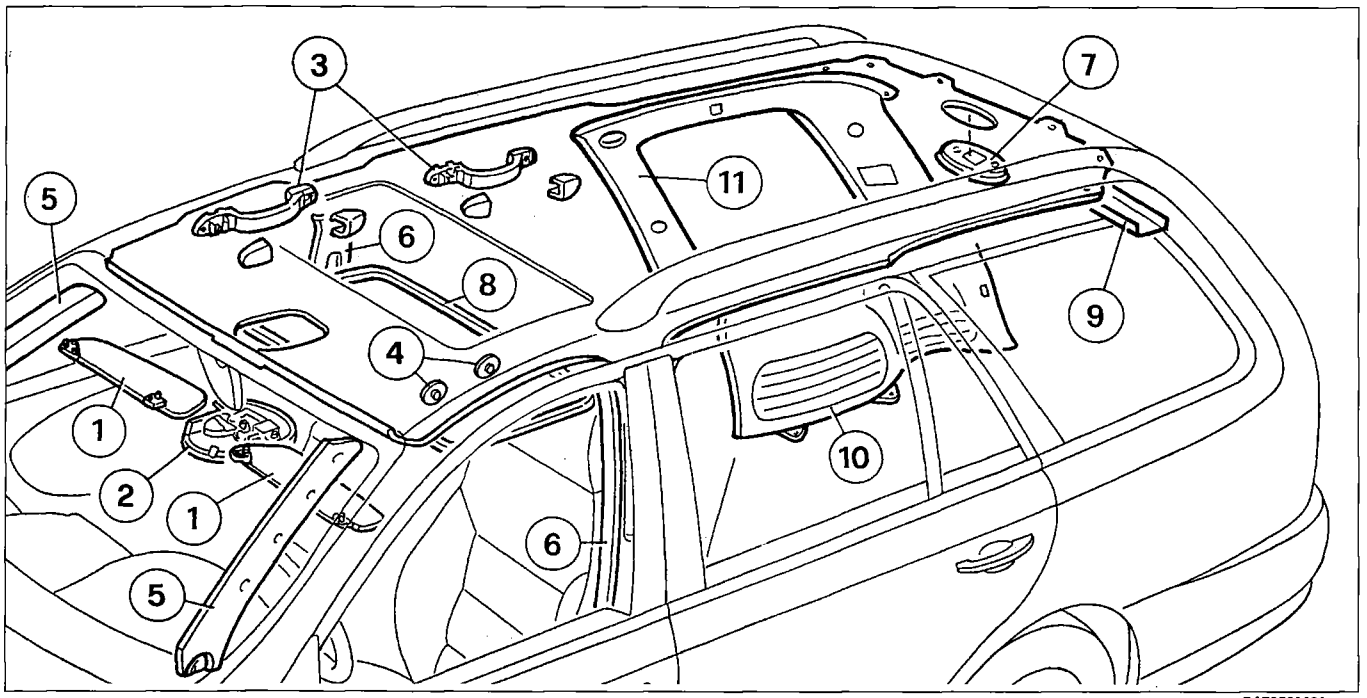

P4F050M01

1. Sun visors and attachments
2. Front courtesy light
3. Grab handles
4. Roof lining fixing trims
5. Front pillar covers
6. Centre pillar covers
7. Rear courtesy light
8. Sun roof trim
9. Luggage compartment upper covering
10. Luggage compartment side coverings
11. Luggage compartment pillar covers

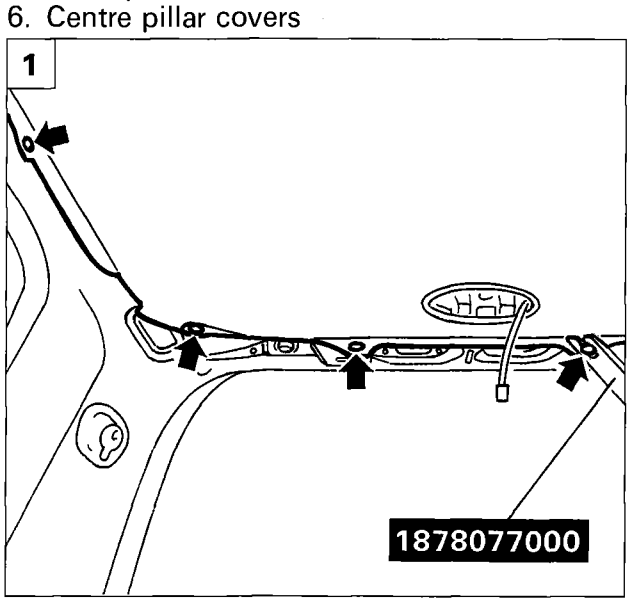

P4F050M02

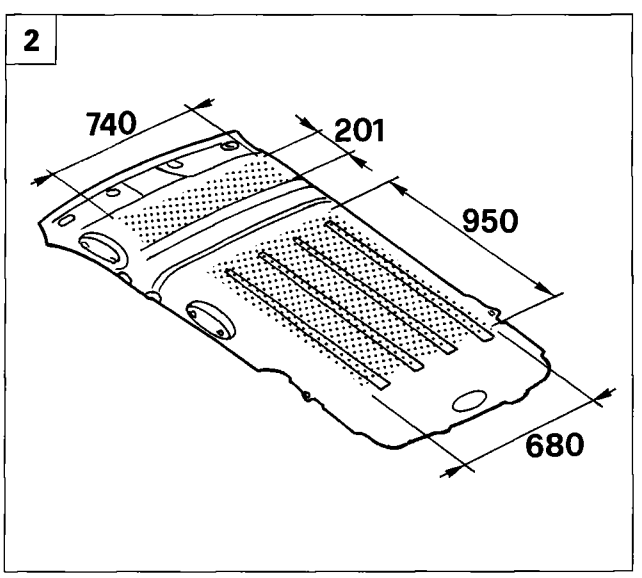

P4F050M03

1. Working in the area of the luggage compartment, remove the retainers for the roof lining, using tool 1878077000.
2. Areas for applying adhesive to the roof lining.

- For the procedures of removing and refitting the roof lining follow the instructions given for the Marea (See previous pages). In this case too, the lining for the version with a sun roof is not stuck to the roof.

DASHBOARD
GENERAL VIEW Dismantling

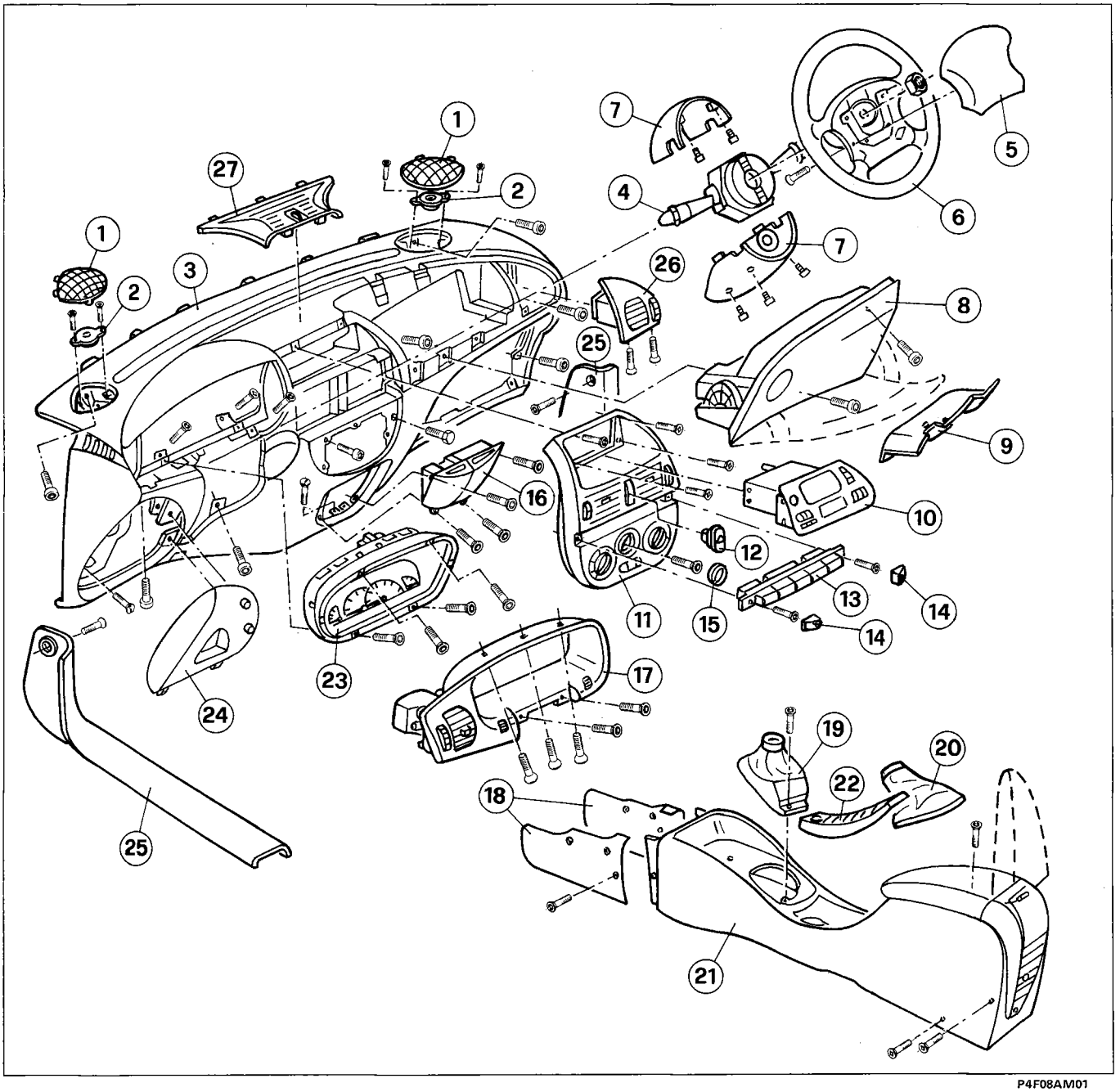

P4F08AM01

1. Speaker grille
2. Speaker
3. Dashboard cover
4. Steering column switch unit
5. Horn/air bag protection
6. Steering wheel
7. Half-casings
8. Glove compartment
9. Cover
10. Radio
11. Centre panel
12. Emergency switch
13. Switch unit
14. Trims
15. Fan control knob
16. Ashtray/cigar lighter assembly
17. Instrument panel frame
18. Protection
19. Gear lever boot
20. Handbrake lever boot
21. Tunnel cover oddments tray
22. Trim
23. Instrument panel
24. Protection for junction unit
25. Underdoor covers (running board)
26. Right air vent
27. Upper grille

Copyright by Fiat Auto

GENERAL VIEW of Retainers

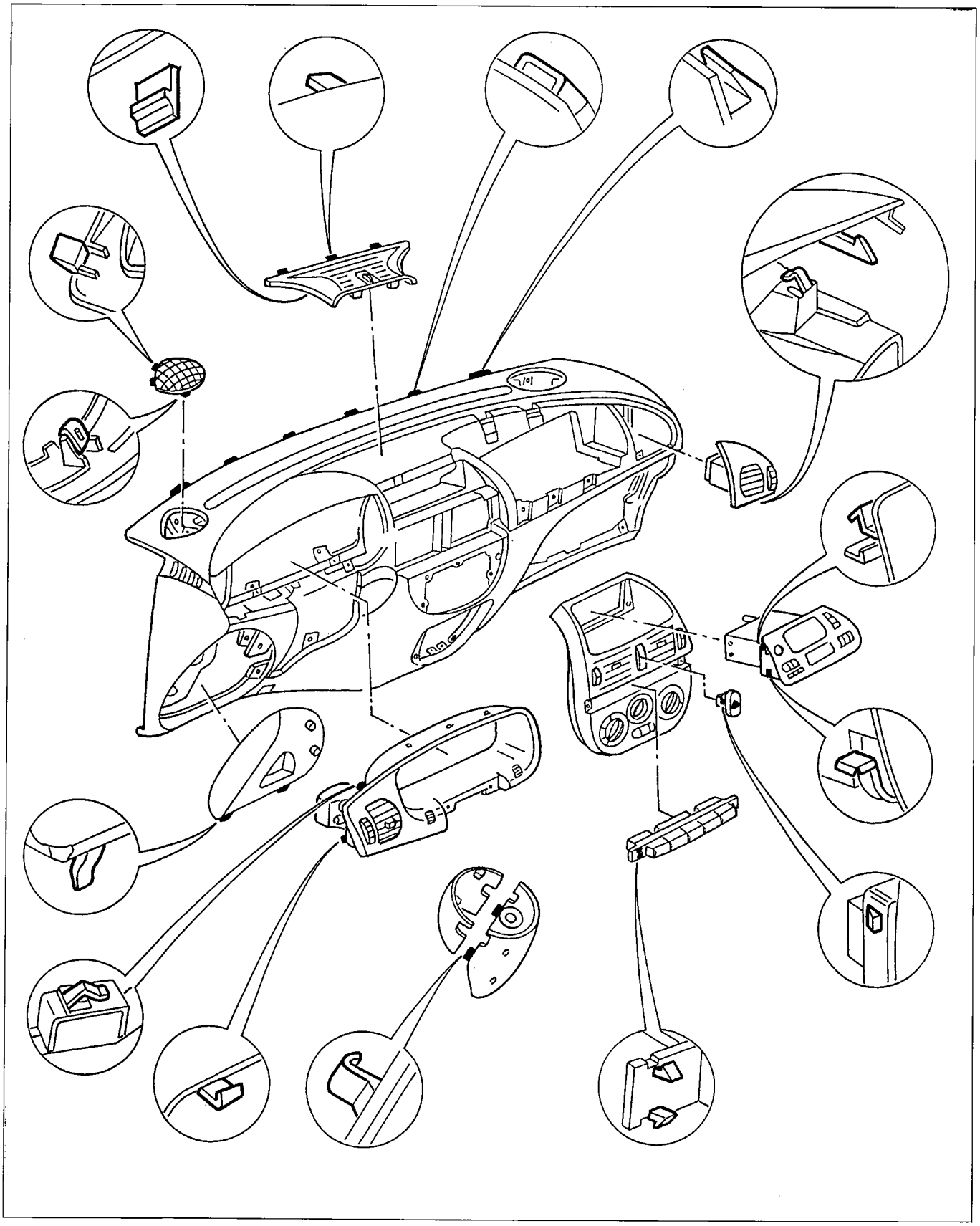

P4F09AM01

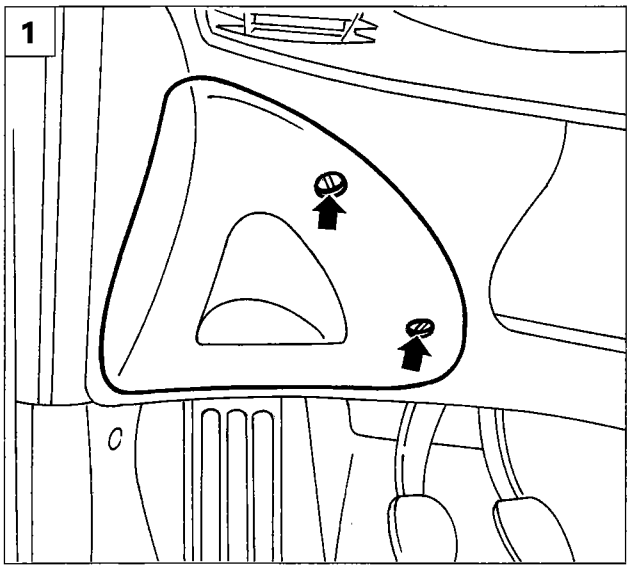

P4F10AM01

REMOVING-REFITTING DASHBOARD

- Remove the tunnel cover oddments tray as described in the specific paragraph.
- Remove the steering column switch unit from the vehicle as described in section 55 - Electrical equipment.
- Remove the radio from the vehicle as described in section 55 - Electrical equipment.
- Remove the cover for the passenger air bag module.

Follow the safety instructions given in section 55 - Electrical equipment

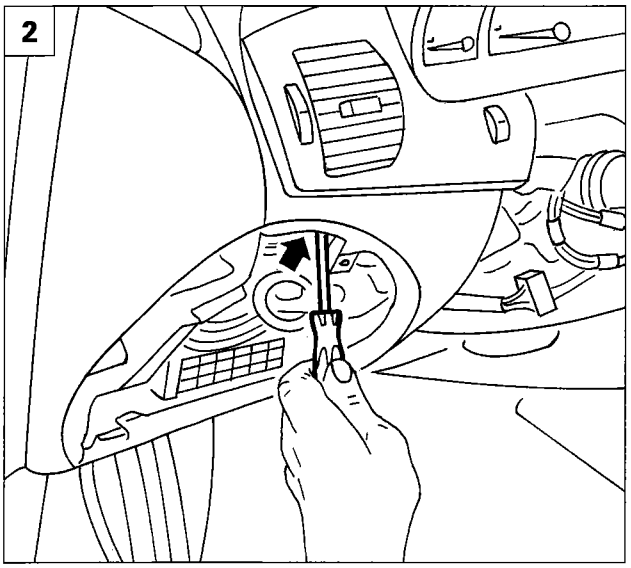

P4F10AM02

1. Acting at the points shown, remove the protection for the junction unit.
2. Undo the bolt on the inside.
3. Undo the bolts shown, then gently move the instrument panel frame aside, disconnect the connectorsand remove the instrument panel frame.
4. Loosen the fixing bolts shown, disconnect the connectors at the rear of the instrument panel, then remove it from the dashboard.

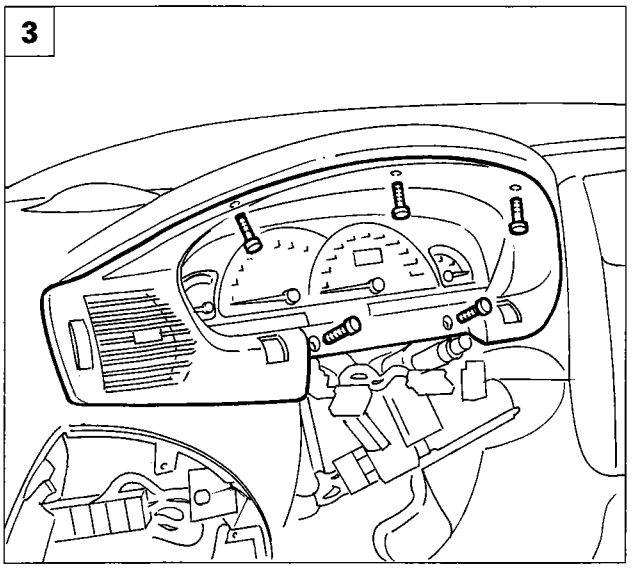

P4F10AM03

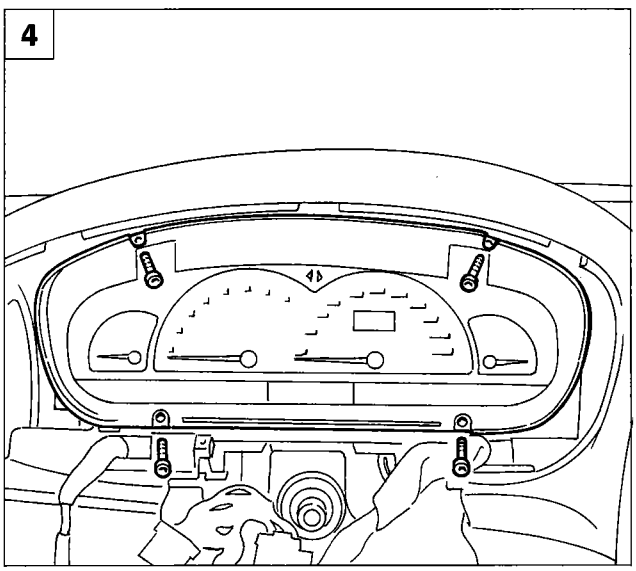

P4F10AM04

70.

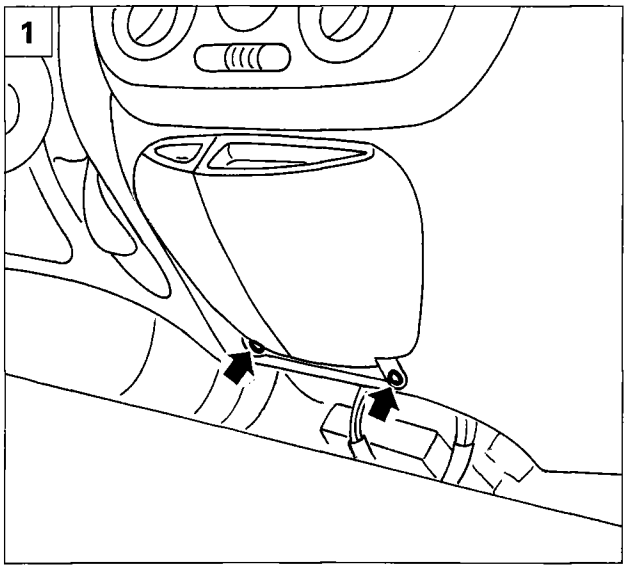

P4F11AM01

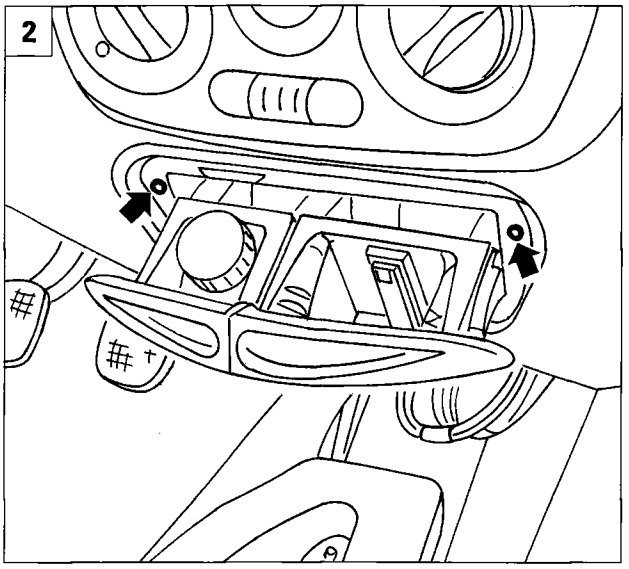

P4F11AM02

1. Loosen the lower bolts fixing the ashtray to the dashboard.
2. Undo the bolts shown in the diagram and disconnect the connector for the cigar lighter/lighting.
3. Using a screwdriver, remove the trims (A). Undo the bolts (B) and gently extract the switch unit (C).
4. Disconnect the connectors (A) and remove the switch unit.
   Acting as shown in the diagram, extract the switch (B) and disconnect from the two connectors.

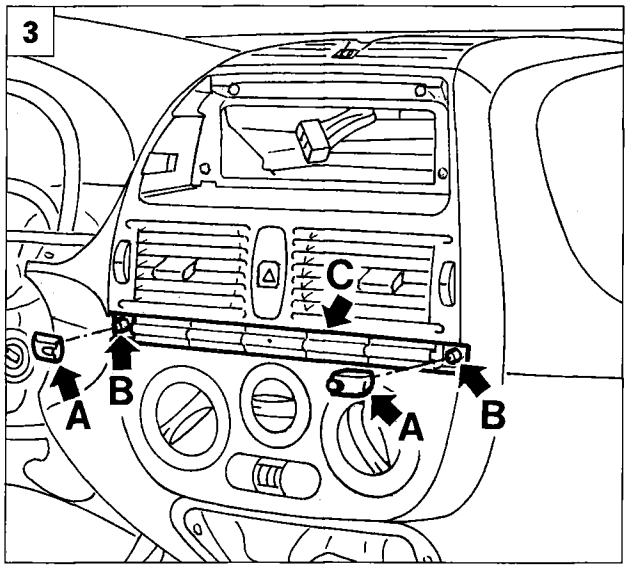

P4F11AM03

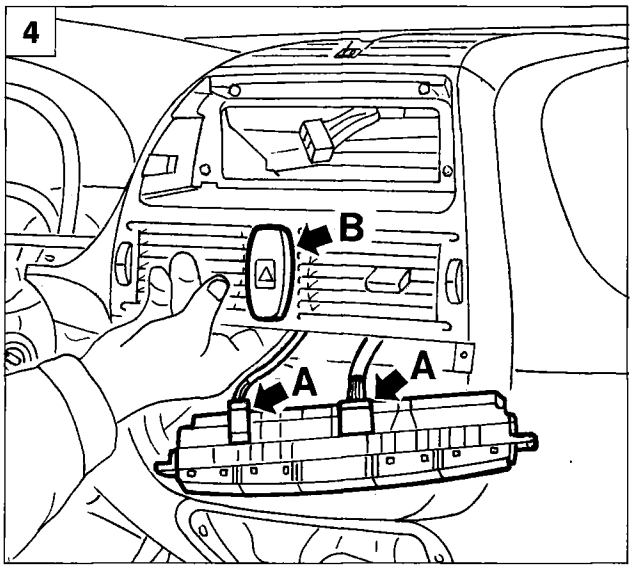

P4F11AM04

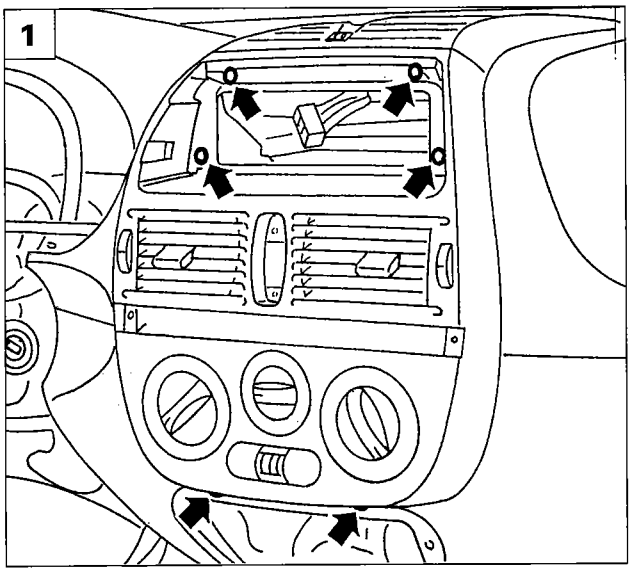

P4F12AM01

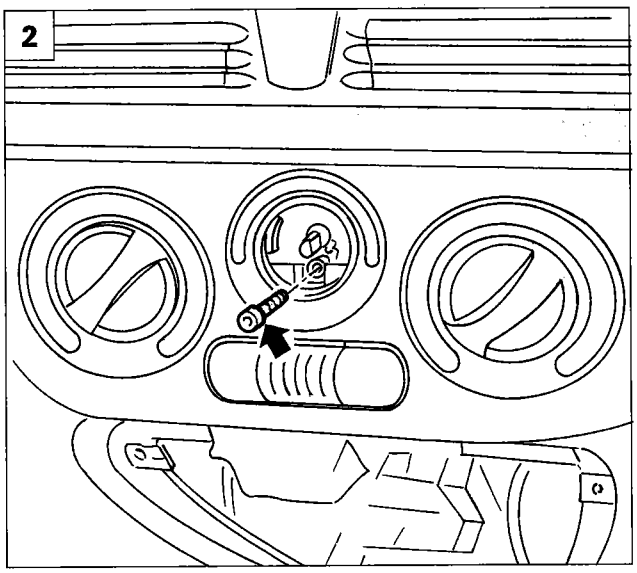

P4F12AM02

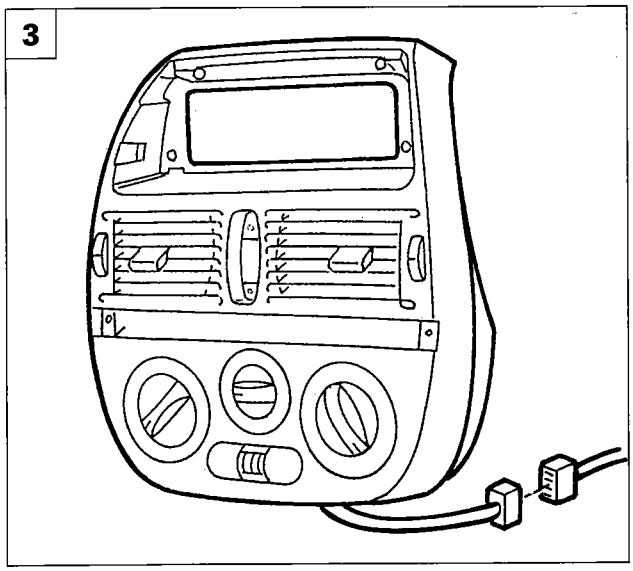

P4F12AM03

1. Undo the bolts fixing the heater control panel and various switches.
2. Extract the fan control knob, then undo the bolt underneath.
3. Remove the heater control panel and various switches from the dashboard after having disconnected the connection for the climate controls.
4. Undo the bolts fixing the dashboard, in the ashtray housing.
5. Undo the bolts fixing the dashboard to the heater and bolt (A).

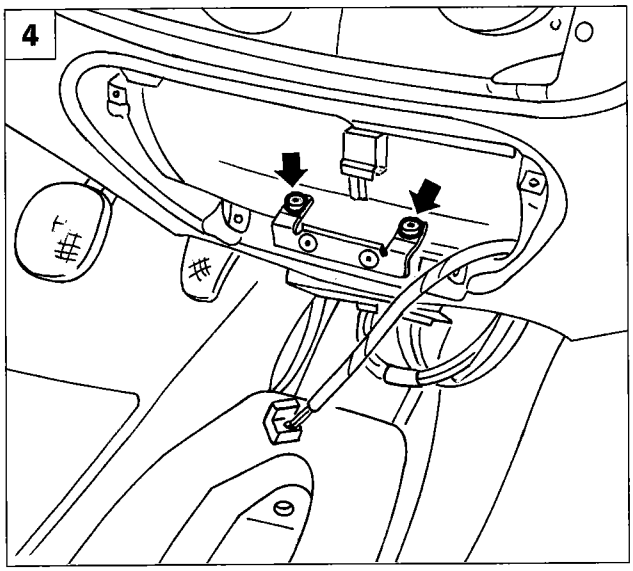

P4F12AM04

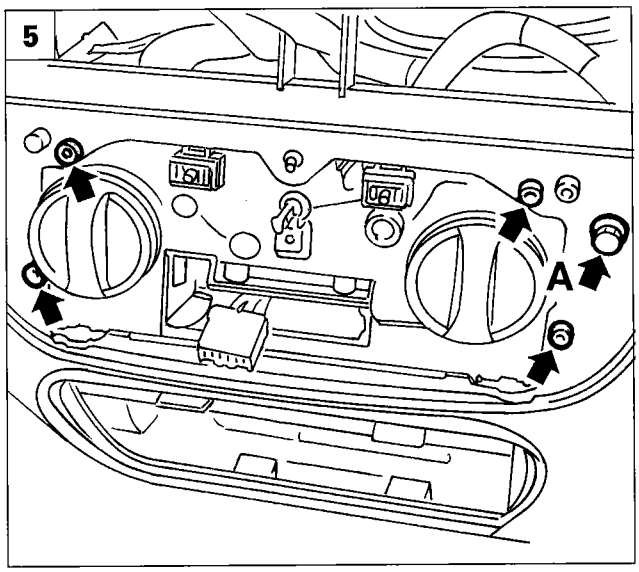

P4F12AM05

Copyright by Fiat Auto

70.

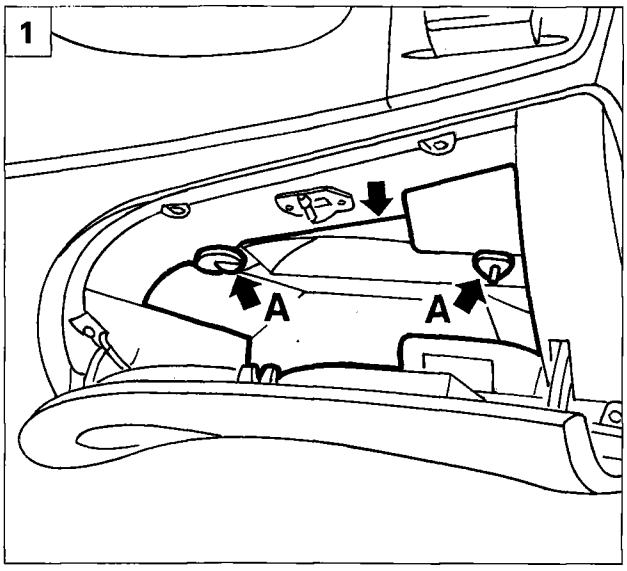

P4F13AM01

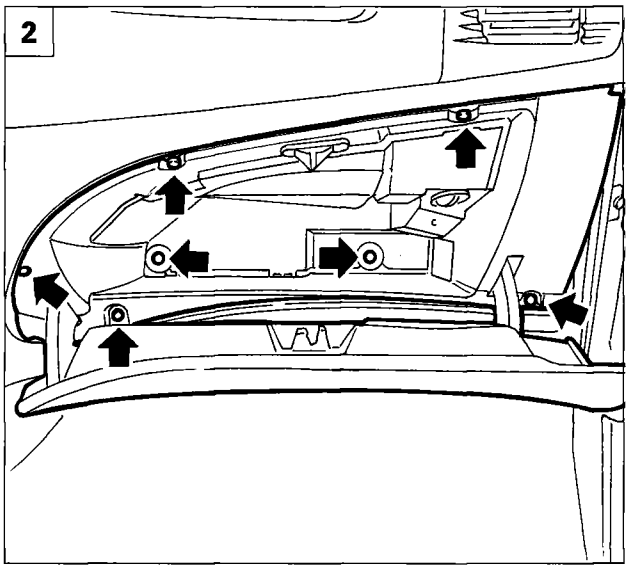

P4F13AM02

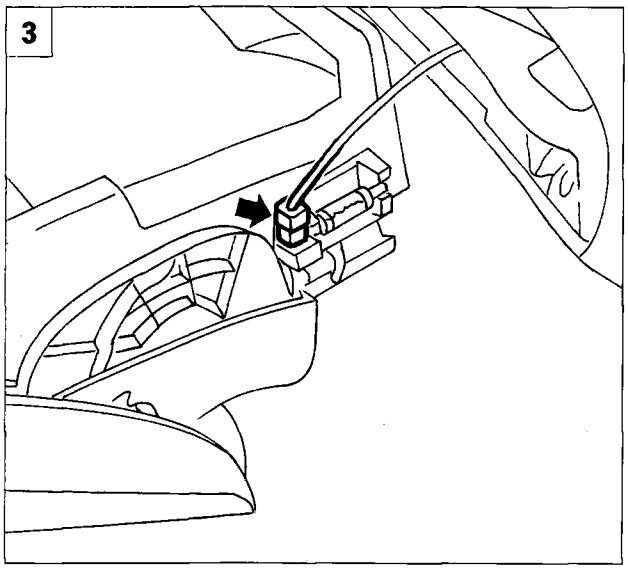

P4F13AM03

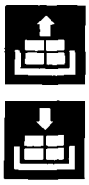

1. Working from inside the glove compartment, release the closures (A) and remove the cover.
2. Loosen the fixing bolts shown and gently remove the glove compartment.
3. Disconnect the connector for the courtesy light.
4. Undo the bolts fixing the right air vent, then remove it.
5. Undo the bolt shown fixing the dashboard, right hand side.

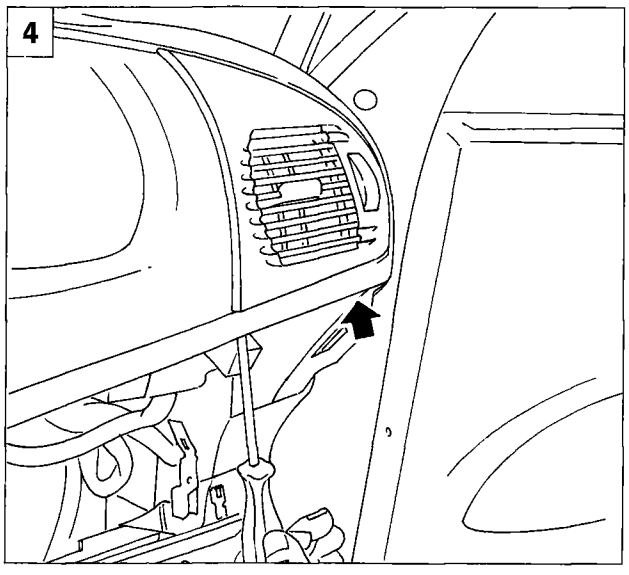

P4F13AM04

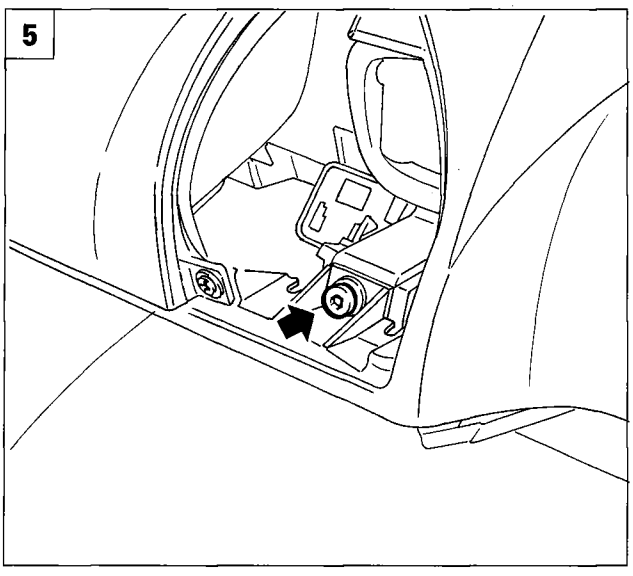

P4F13AM05

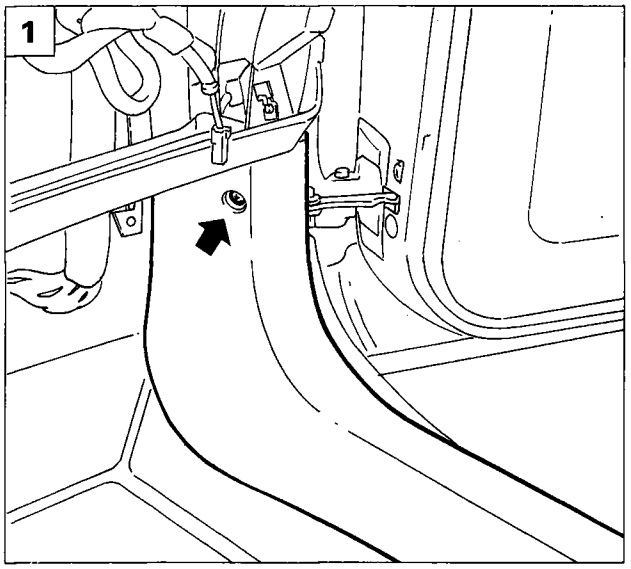

P4F14AM01

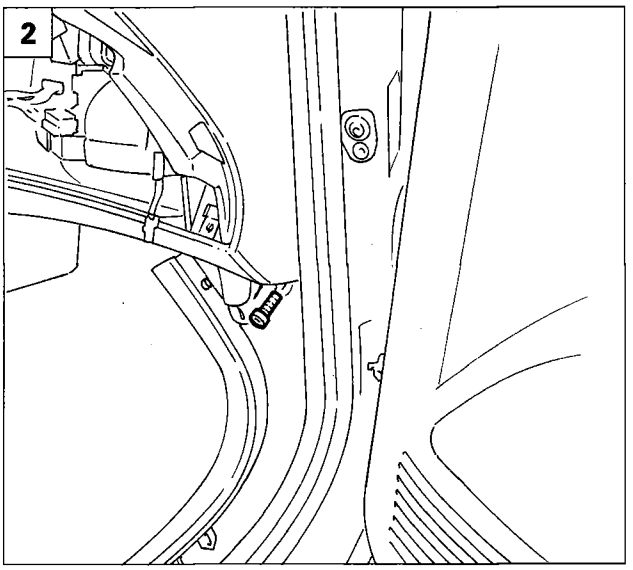

P4F14AM02

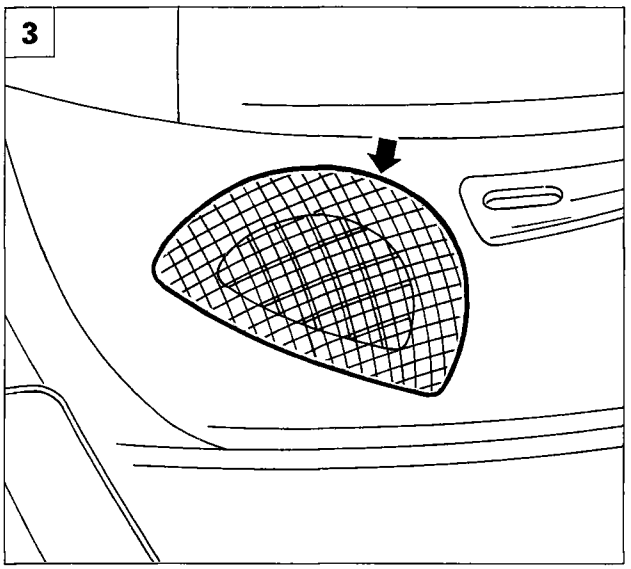

P4F14AM03

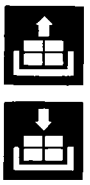

1. Undo the bolt shown and remove the underdoor cover (running board) aside on both sides of the vehicle.
2. Working appropriately, undo the bolt fixing the dashboard to the bodyshell on both sides.
3. Working on the side shown, remove the left and right speaker grilles.
4. Remove the left and right speakers, undoing the fixing bolts and disconnecting the appropriate connectors.
5. Undo the dashoard fixing bolts in the right and left speaker housings.

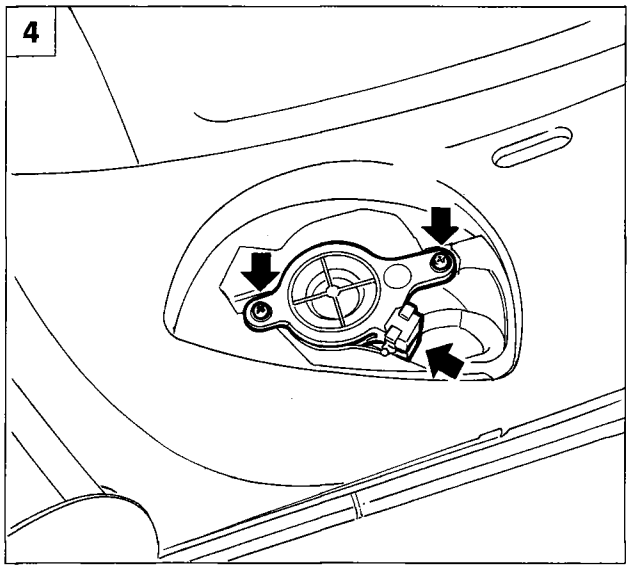

P4F14AM04

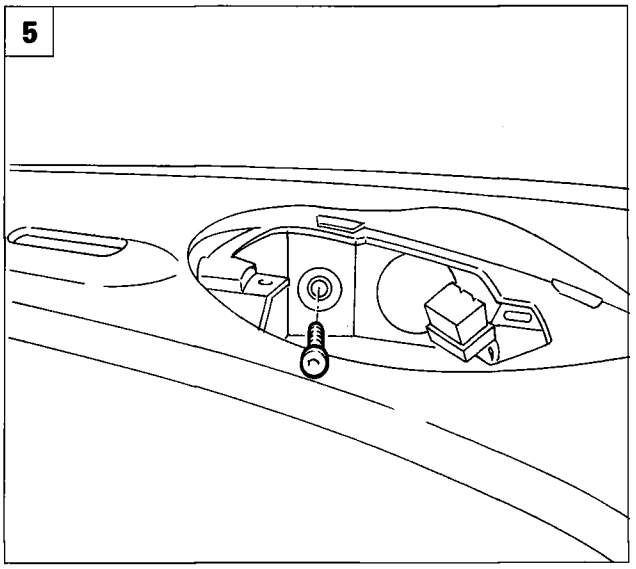

P4F14AM05

Copyright by Fiat Auto

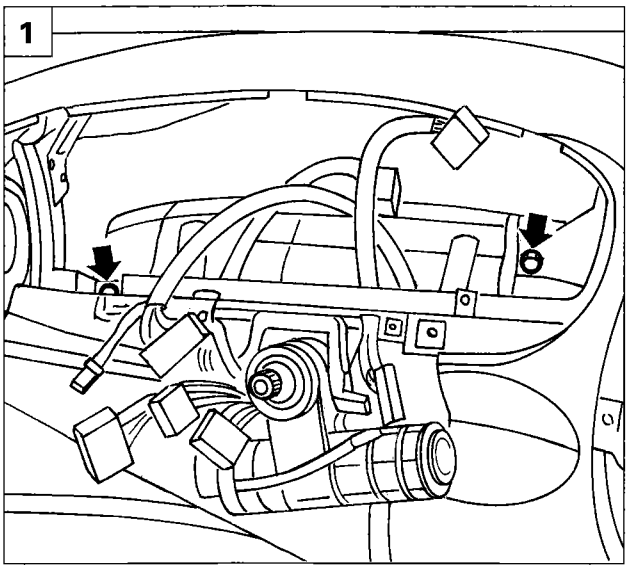

P4F15AM01

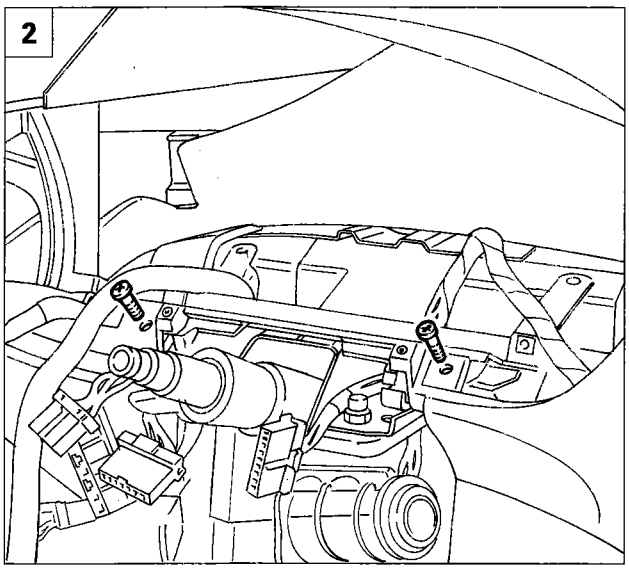

P4F15AM02

1. Undo the bolts fixing the dashboard to the bodyshell, left side.
2. Undo the bolts fixing the dashboard to the steering column.
3. Undo the fixing bolt between the dashboard and the bodyshell.
4. Disconnect the two connectors (A) for the alarm system emergency key.

- Undo the bolt (B) fixing the dashboard to the bodyshell.

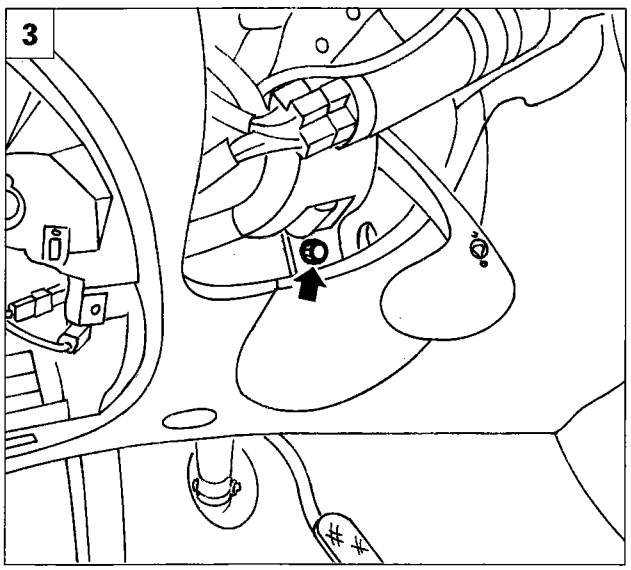

P4F15AM03

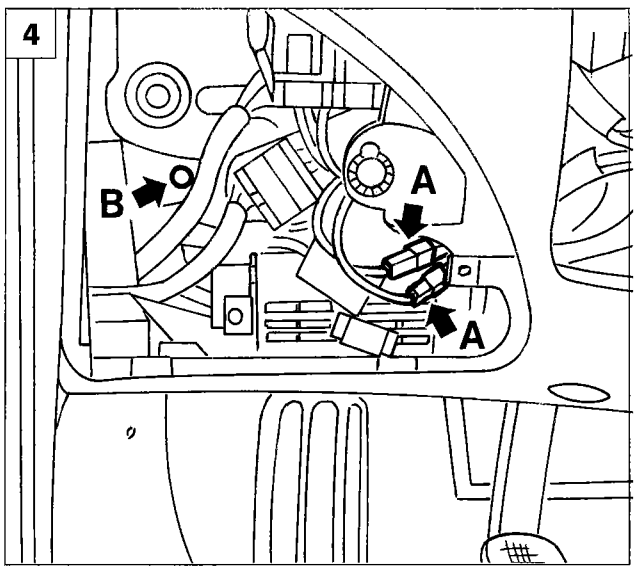

P4F15AM04

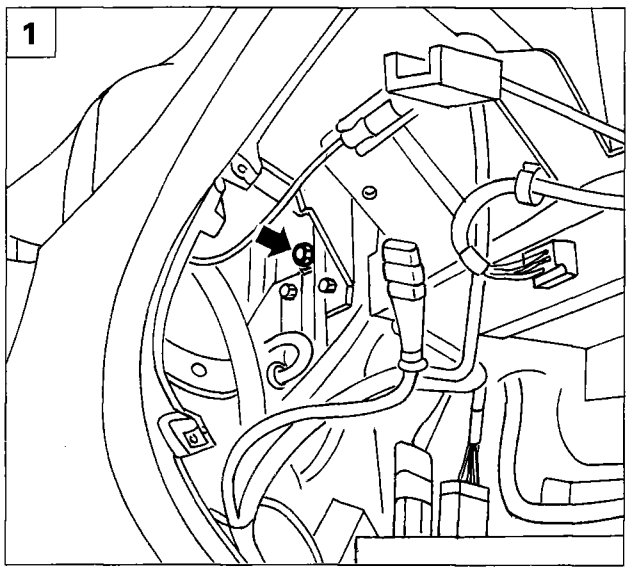

P4F16AM01

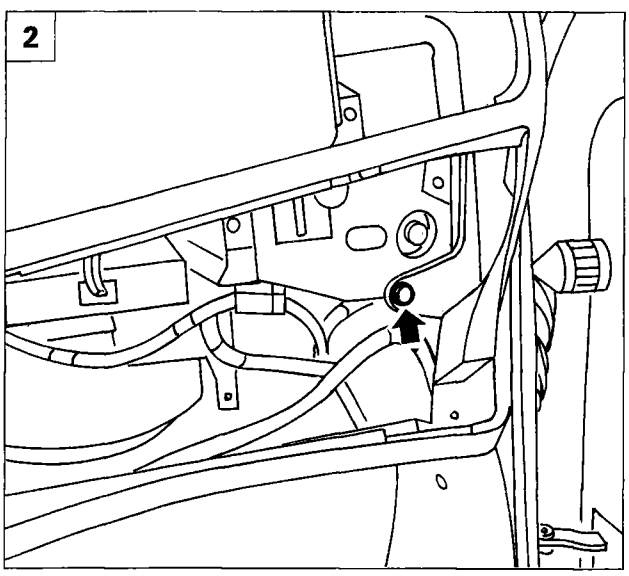

P4F16AM02

1. Working in the centre of the dashboard, undo the bolt shown.
2. Working on the right hand side of the dashboard, undo the bolt shown.
3. Loosen the steering wheel lever (A) adjustment nut.
4. Remove the dashboard from the vehicle, with the help of a second operator.

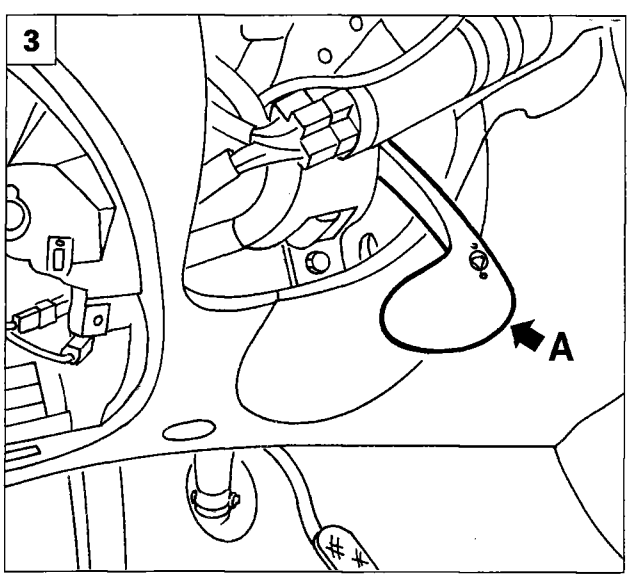

P4F16AM03

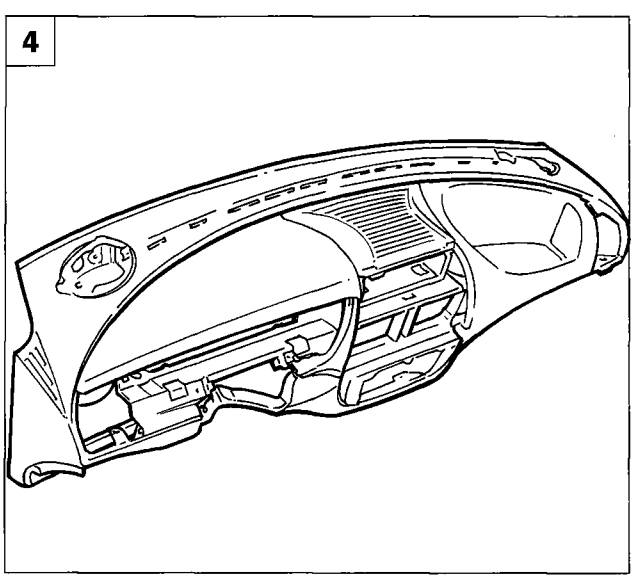

P4F16AM04

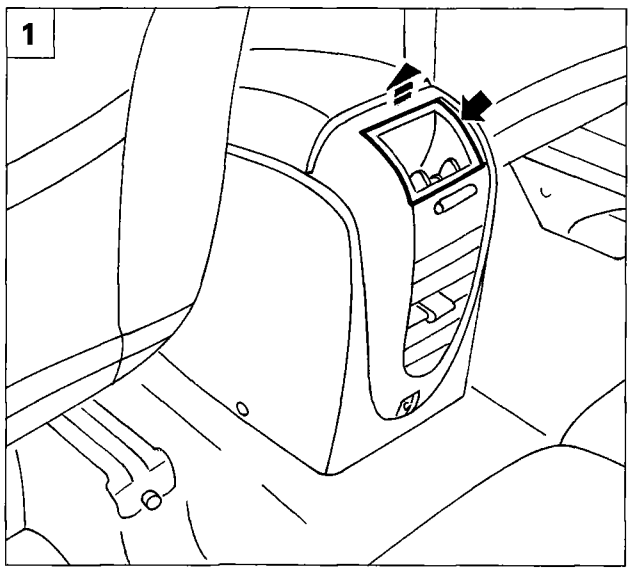

P4F060M01

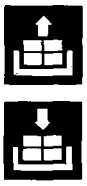

REMOVING-REFITTING REAR AIR VENT

1. Extract the rear ashtray.
2. Undo the bolts shown and remove the rear air vent

REMOVING-REFITTING TUNNEL COVER ARMREST

- Remove the rear air vent, following the instructions given above.
3. Undo the rear fixing bolt and remove the tunnel cover armrest.

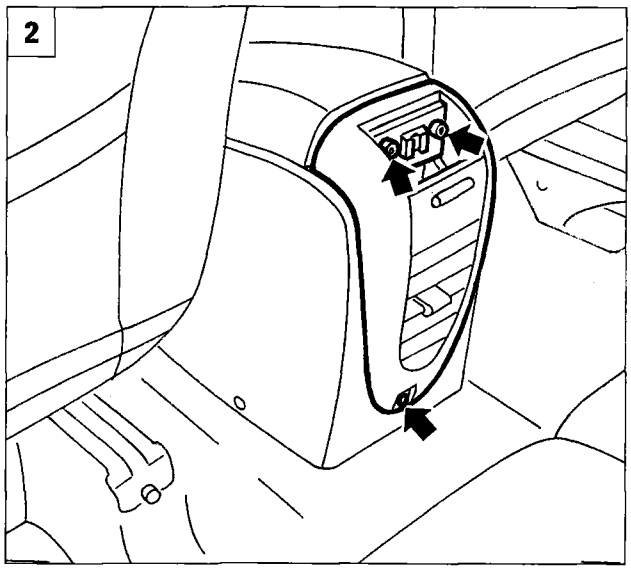

P4F060M02

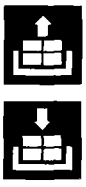

REMOVING-REFITTING TUNNEL COVER ODDMENTS TRAY

4. Undo the rear bolts illustrated.

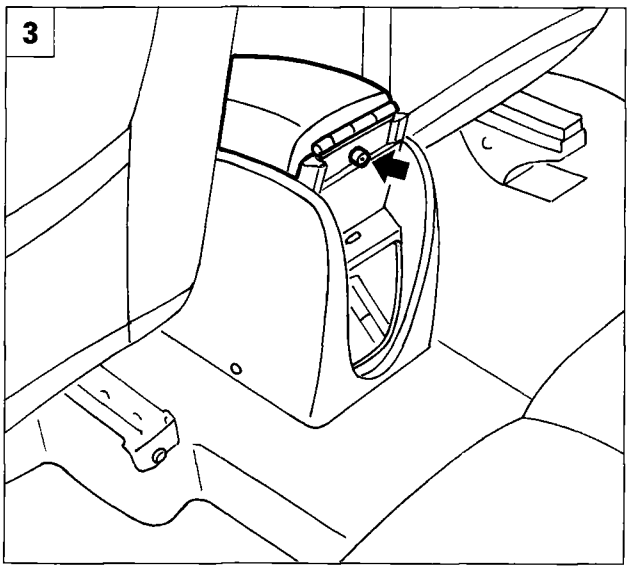

P4F060M03

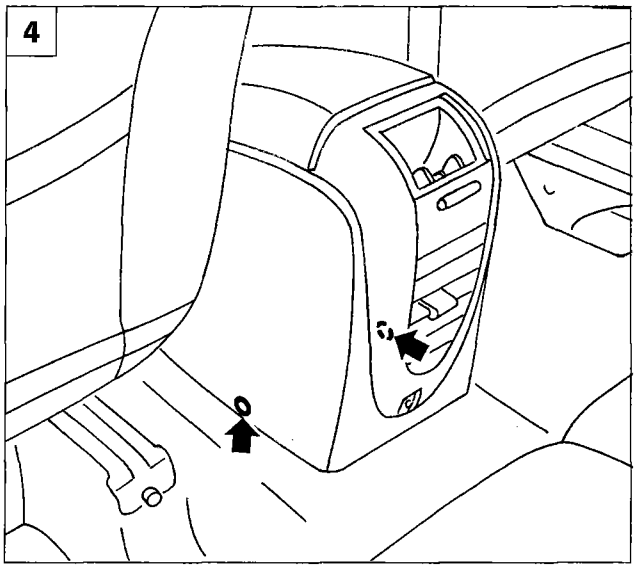

P4F060M04

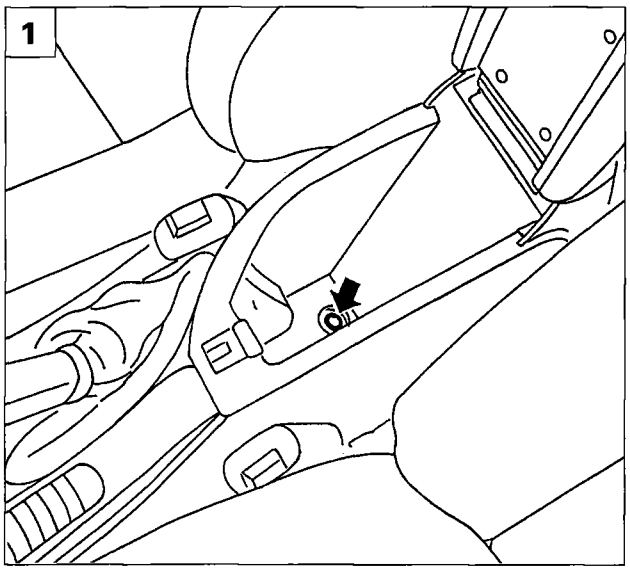

P4F061M01

1. Lift up the armrest and undo the bolt shown.
2. Remove the boot (A) for the handbrake lever.
- Remove the trim (B) and move it aside gently.
3. Disconnect the connectors (A) and remove the trim.
- Undo the bolt (B) and remove the gear lever boot.
- Undo the bolts (C) and (D).
4. Working on both sides, undo the bolts fixing the protection and remove the tunnel cover oddments tray (A).

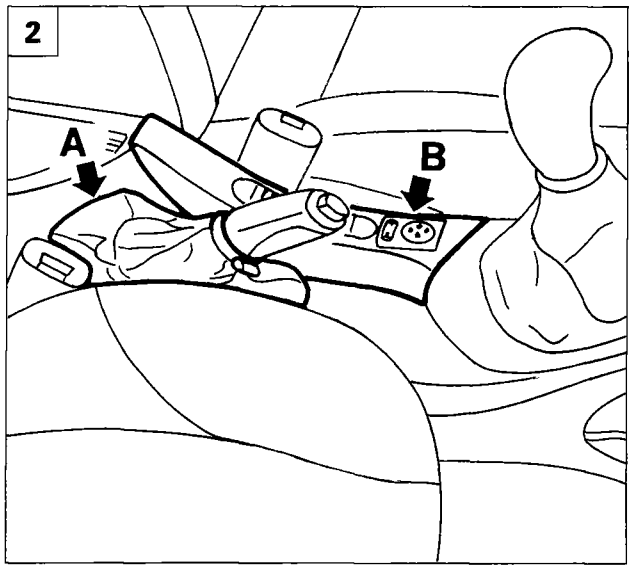

P4F061M02

NOTE *To refit, simply reverse the order of the operations carried out for the removal.*

REMOVING-REFITTING FRONT SEAT BELTS

See:
- for vehicles fitted with Air Bags: Group 55 - Air Bag and pre-tensioners.
- for vehicles without Air Bags: Group 70 - mechanically operated pre-tensioners.

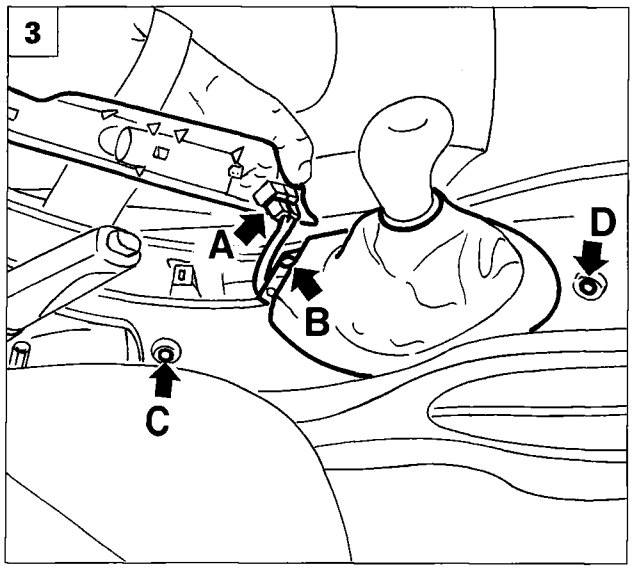

P4F061M03

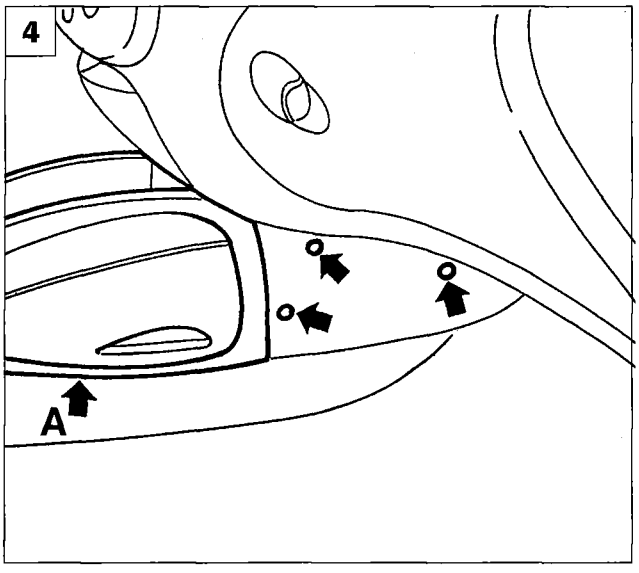

P4F061M04

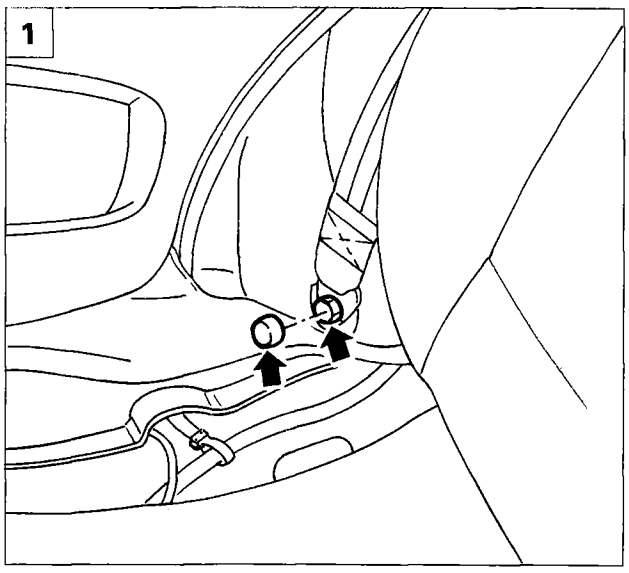

P4F062M01

REMOVING-REFITTING REAR SEAT BELTS (Marea)

- Remove the rear parcel shelf, as described in the specific paragraph.

1. Remove the fixing cover shown, then undo the lower belt fixing bolt.
2. Undo the fixing bolt and remove the reel.

NOTE *To refit, simply reverse the order of the operations carried out for the removal. Tighten all the bolts to a torque of 4 daNm.*

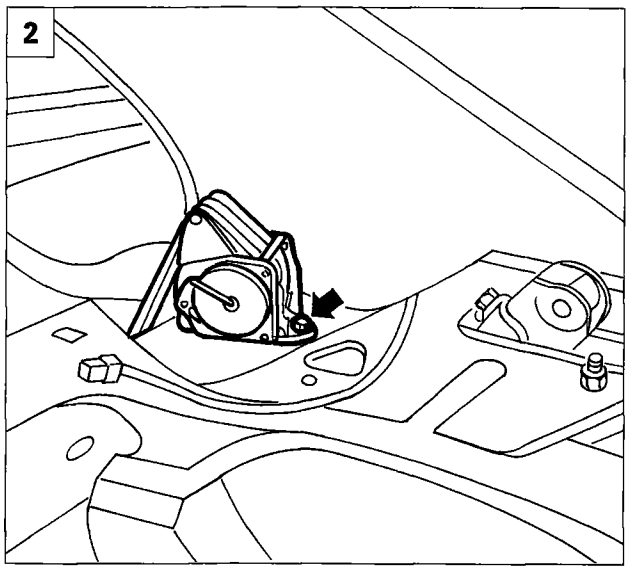

P4F062M02

REMOVING-REFITTING REAR SEAT BELTS (Marea Weekend)

- Remove the luggage compartment side lining working as described in the specific paragraph.

3. Remove the fixing cover shown, then undo the lower belt fixing bolt.
4. Remove the trim (A) and undo the seat belt idler fixing nut (B) underneath.

- Undo the fixing bolt and remove the reel.

NOTE *To refit, simply reverse the order of the operations carried out for the removal. Tighten all the bolts to a torque of 4 daNm.*

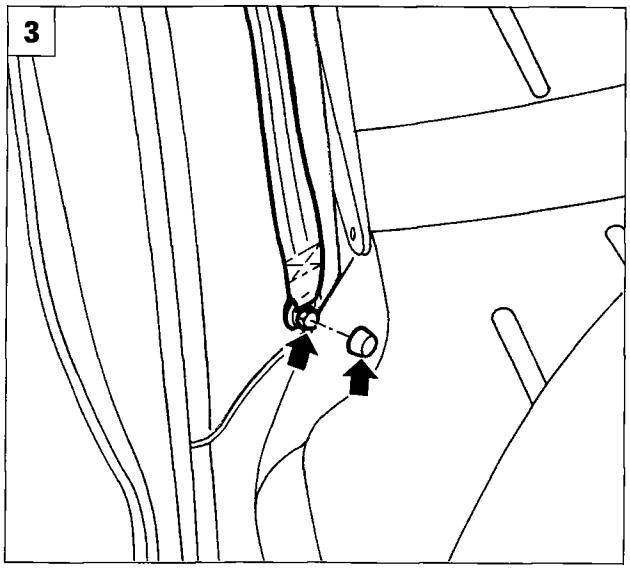

P4F062M03

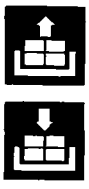

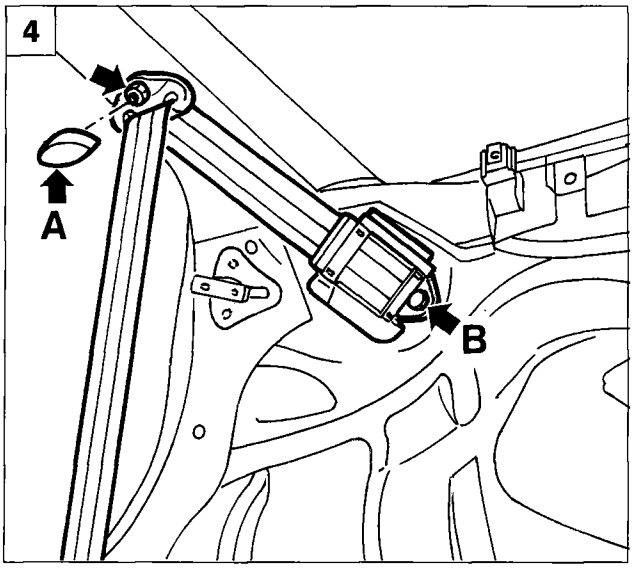

P4F062M04

NOTE *For vehicles EQUIPPED WITH AIR BAGS the pre-tensioners are electrically operated, controlled by the same control unit as the Air Bags (see Group 55).*
For vehicles WITHOUT AIR BAGS the pre-tensioners are MECHANICALLY OPERATED PYROTECHNIC DEVICES and are illustrated below.

INTRODUCTION

PRE-TENSIONERS for seat belts are devices integrated in the reel which, in the case of a frontal impact, recover the inevitable lengthening of the belts due to the action of the weight of the body of the person in the seat, ensuring that they remain close to the backrest.
In effect, it is vital for the belt to remain as close as possible to the person's body in order to gradually absorb the kinetic energy which they assume during the impact.
The lengthening of the belt can be due to the following causes:
- delay in the operation of the inertia locking device;
- stretching of the belt fibres;
- wrapping of the belt around the reel (spooling effect);
- thick clothing which increases the distance between the belt and the chest.

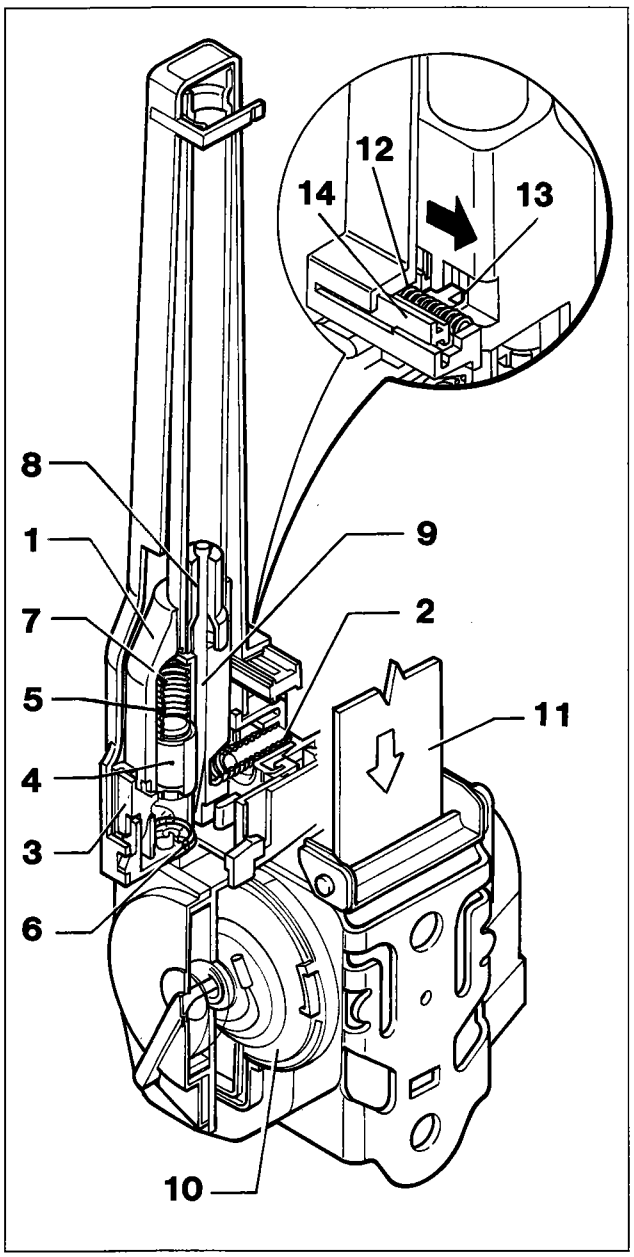

P4F101M01

Diagram showing operation of pre-tensioner

OPERATION

The pre-tensioner fitted on the vehicle is equipped with a special bracket (see pages which follow) which has the task of activating the system.
This takes place because the end of the above mentioned bracket acts on the pulley (14) overcoming the spring (12) loading and pushing the pulley (14) tooth (13) in the direction of the arrow shown in the detail of the diagram, releasing the oscillating mass (1) allowing it to act.
Sudden deceleration, caused by an impact causes the oscillating mass (1) to move forwards and compresses the opposing spring (2). If the deceleration is sufficiently rapid, the oscillating mass engages in such a position that it releases the gas generator (4) from its retaining system (3) which moves downwards, throught the action of the thrust spring (5) and comes into contact with the striker (6) which engags the charge.
This gives rise to the combustion of the pyrotechnic charge which activates the main charge and the gases which develop in the chamber (7) flow, through the appropriate port, to the piston (8) causing the rapid movement along the expansion chamber.
The metal rod (9), fixed at one end to the piston and at the other to a pulley fitted on the actual axis of the winding (10) for the belt (11) produces the rotary movement required for the rewinding.
At the end of the operation the reel locks in the maximum belt recall position on the body of the occupant of the appropriate seat.

The locking of the seat belt is an indication that the pre-tensioner has been activated or of a malfunction of the reel. In both cases the device must be replaced.

Copyright by Fiat Auto

REMOVING BRACKET

*The removal of the brackets prevents the pyrotechnic device from being accidentally activated. This operation **should be carried out** each time a service operation which could cause the device to be accidentally activated is carried out. The bracket should ALWAYS ONLY BE RE-FITTED with the pre-tensioner unit fitted on the vehicle in order to avoid personal injury to the operators.*

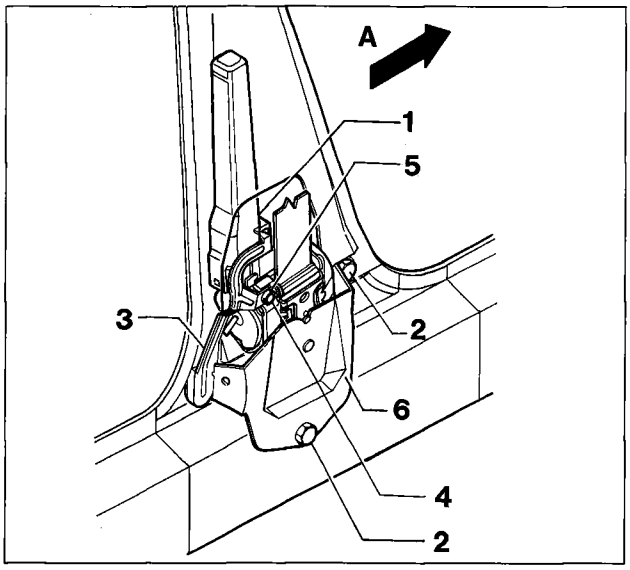

P4F102M01

Break the protective collar (5) (guarantee seal), undoing the fixing bolt (4) and remove the bracket (3) (see also diagram below). Undo the bolts (2) fixing the pre-tensioner support to the bodyshell and remove the support assembly (6) and pre-tensioner (1) from the pillar and separate the two components.

REFITTING SEAT BELT WITH PRE-TENSIONER

To refit the pre-tensioner assembly (1) on the vehicle it is necessary firstly to fix the pre-tensioner (1) to the bodyshell using the bolts (2) which should be tightening to a torque of 4 daNm; then fix the bracket (3) using the double headed yield point type bolt (4) tightening it to a torque of 0.7 daNm.

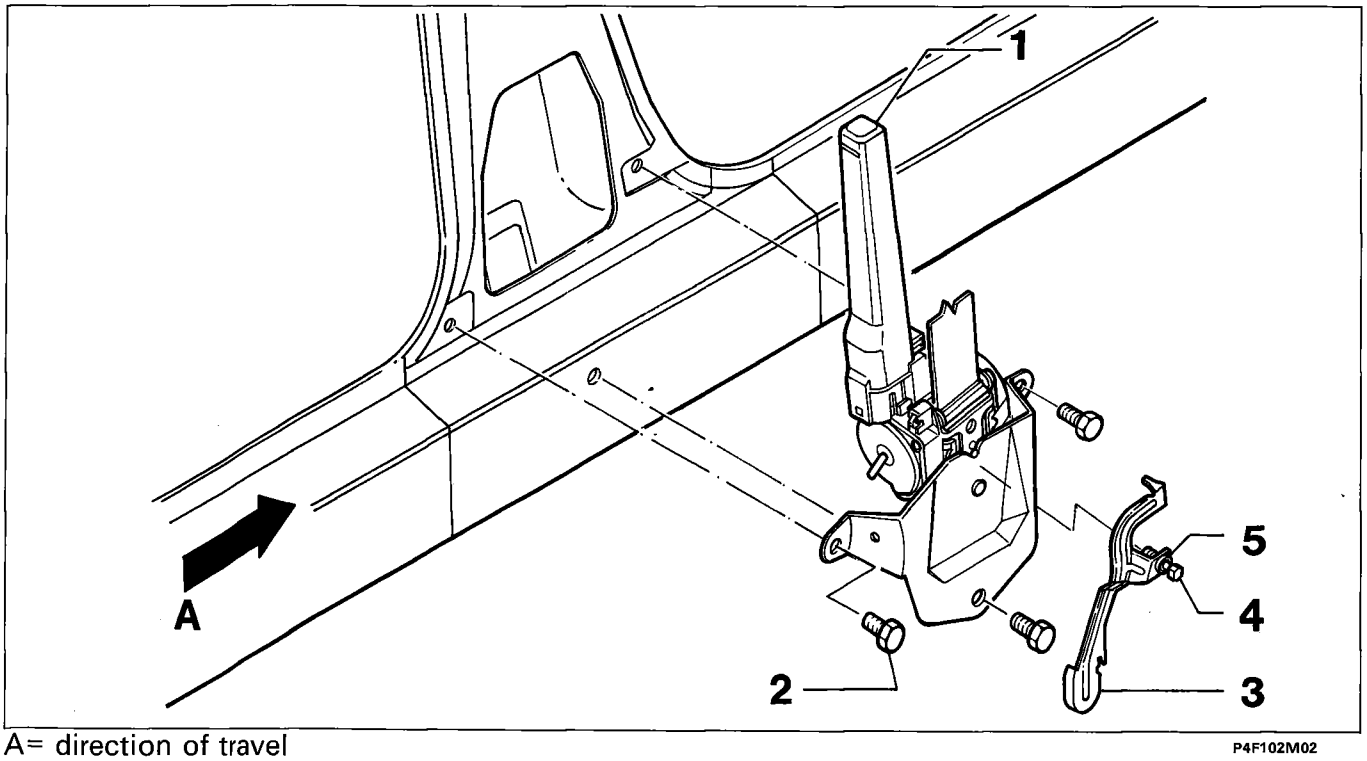

A= direction of travel

P4F102M02

NOTE *It should be remembered that the system is correctly set when the head of the bolt (4) breaks at the correct point.*
The bolt (4) and the bracket (3) should be replaced each time the pre-tensioner is removed.

4F102M

SAFETY INSTRUCTIONS WHEN HANDLING SEAT BELT UNIT WITH PRE-TENSIONER

Pre-tensioners are dangerous and therefore they must be handled and stored correctly in order to prevent damage or injury.
In normal conditions, pre-tensioners only activate during impact and during operation they develop small quantities of gases which contain mainly nitrogren which is not a toxic gas.

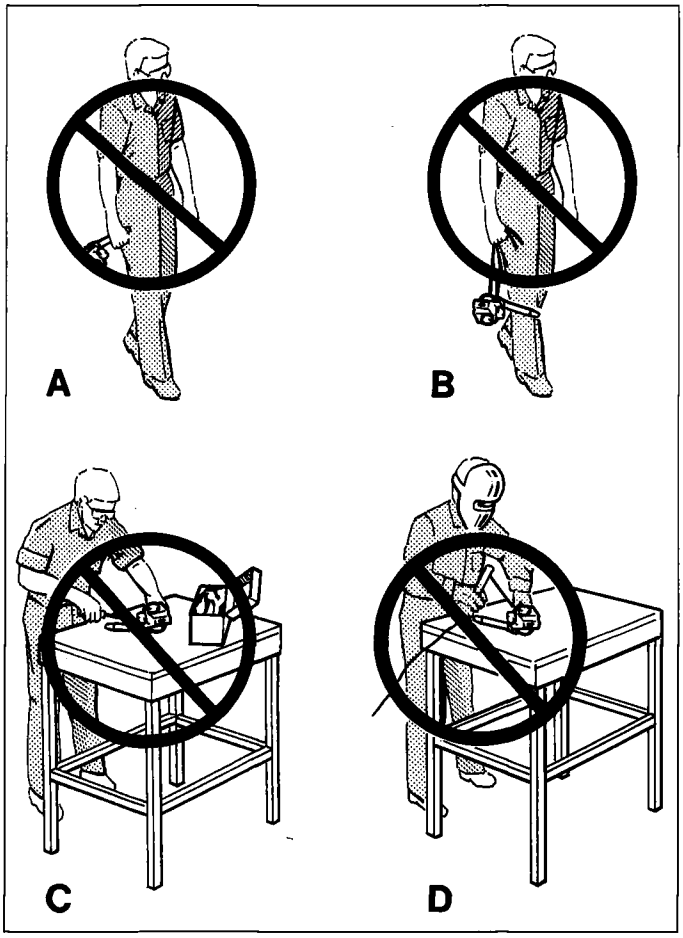

P4F103M01

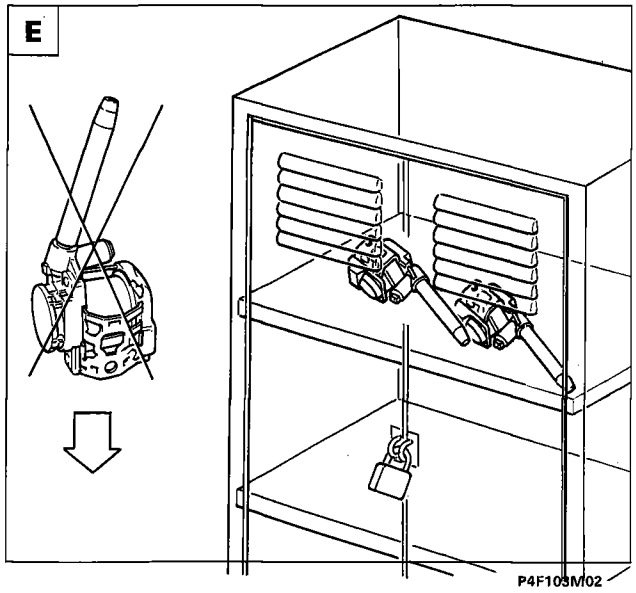

P4F103M02

The following instructions MUST be observed for the safety of operators and the condition of the seat belt assembly with pre-tensioner. It is important that the person carrying out operations to the device is suitably trained.

Before all operations, remove the bracket.

A. Do not move the pre-tensioner by gripping it by the pipe.
B. Do not move the pre-tensioner by gripping it by the belt.
C. Do not tamper with or carry out any repairs to the pre-tensioner, all defective pre-tensioners should be sent to the manufacturer.
D. Do not subject pre-tensioners to percussion, drilling, mechanical working or heating during welding.
E. Take care not to drop pre-tensioners or subject them to impacts; if they are accidentally dropped from a height of more than 1 metre, they should no longer be used, but returned to the manufacturer.
When operations on the vehicle require the temporary removal of the pre-tensioners, they should be placed in a locked metal cupboard suitable for housing pyrotechnic charges in accordance with the laws in force on the subject.
F. Keep naked flames, solves and lubricants away from the cupboard and do not expose it to temperatures in excess of 90 °C.
At temperatures above 140 °C, the gas generator may self-ignite.

- If a pre-tensioner which has been activated has to be handled, wear protective gloves and goggles. If the device has been activated, ALWAYS wait at least 10 minutes before carrying out any operations to it.
- Wash your hands with soap and water after having handled the device.

4F103M

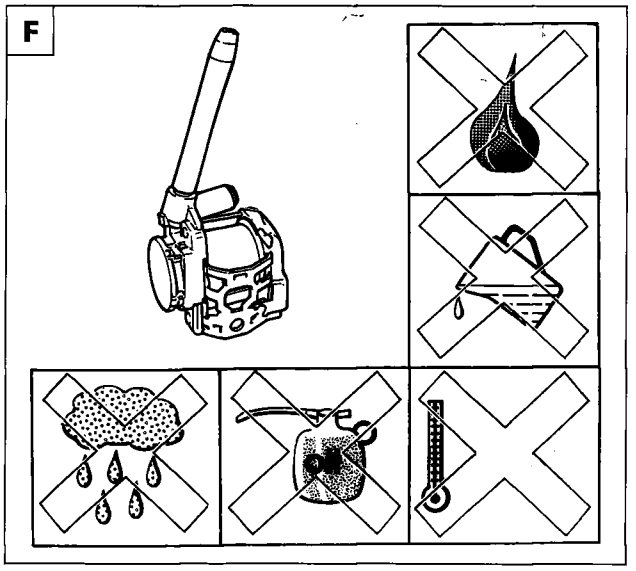

P4F104M01

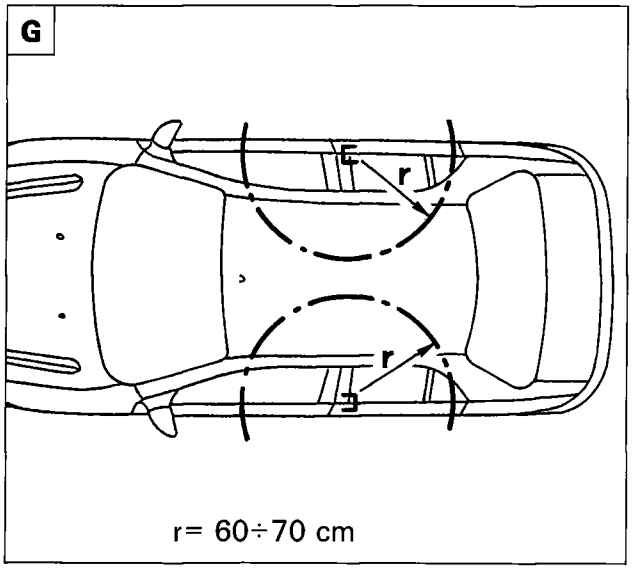

P4F104M02

If as a result of exceptional atmospheric conditions (flood, high tide, etc.) the water and mud reaches such a height that it affects the device components, then the device must be replaced.

Pre-tensioners do nto require any maintenance and should definintely not be lubricated. Any operations modifying its original conditions mean that it cannot be used.

Bodywork operations

G. Do not subject the area surrounding the pre-tensioner (60-70 cm radius) to impact during bodywork repairs (for example the use of a hammer); if necessary, remove the complete pre-tensioner assembly.
If painting operations require the use of lamps in the area surrounding the pre-tensioner or welding or brazing has to be carried out, the complete reel-pre-tensioner assembly must be removed.

A pre-tensioner which did not activate in the case of an accident should be considered still active; therefore those which have not exploded through problems or have reached the end of the warranty should be replaced and returned (see description for Air Bag modules (see section 55 - Electrical equipment).

Ordering methods

Follow the same procedures already described for ordering Air Bag modules (see section 55 - Electrical equipment).

NOTE *Pre-tensioners have bee specially designed to be fitted on every indvidual type and marque of vehicle therefore they cannot be adapted, reused or fitted on other vehicles, only those for which they were designed and produced. Any attempts to reuse, adapt or install pre-tensioners on a different type of vehicle could result in serious or fatal injuries to the occupants of the v ehicle in the case or either an accident or normal usage. After fitting the bracket, the pre-tensioner can be activated if struck with sufficient force.*

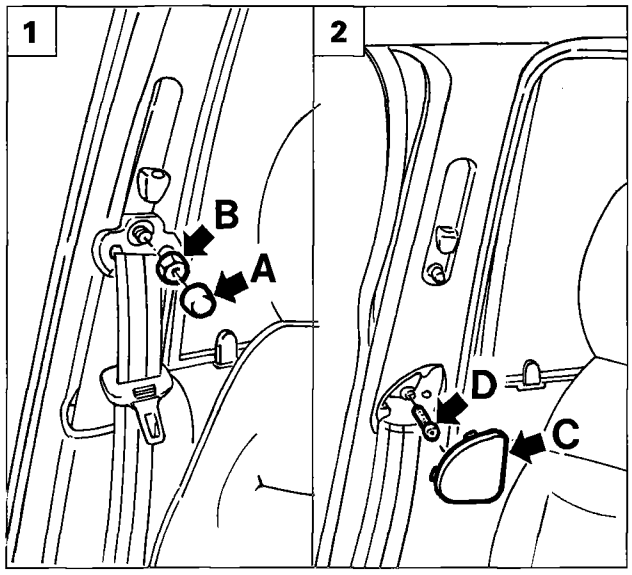

P4F105M01

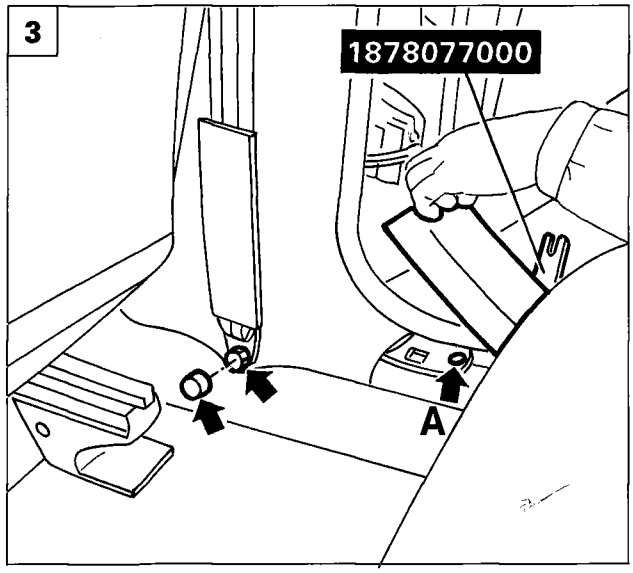

P4F105M02

REMOVING-REFITTING PRE-TENSIONERS

1. Remove the fixing cover (A) and undo the height adjustment nut (B) for the front seat belt.
2. Remove the bolt cover (C), then undo the bolt (D) fixing the pillar cover.
3. Remove the fixing cover and undo the bolt fixing the front seat belt.
   Using tool 1878077000, releaseand raise the rear runnding board, then undo the bolt (A) fixing the pillar cover.
4. Undo the front bolt under the dashboard for the running board and, using tool 1878077000, release and raise the front running board. Undo the bolt fixing the pillar cover.
5. Move the door trims (A) and (B) aside by the pillar cover; remove the centre pillar cover using tool 1878077000, to gain access to the pre-tensioner device.

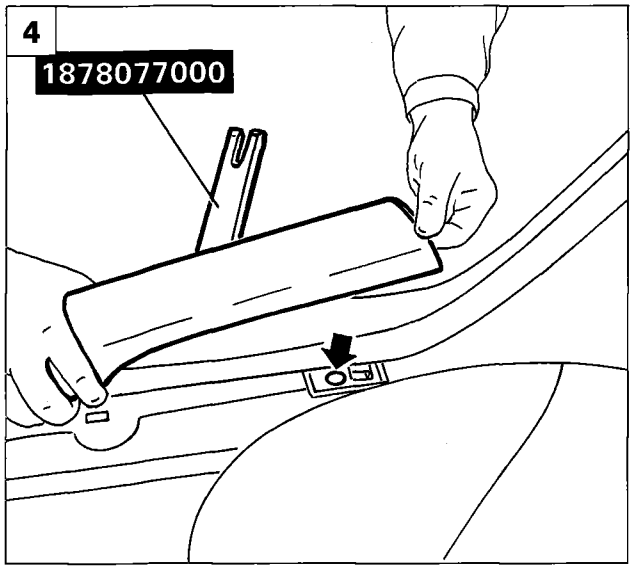

P4F105M03

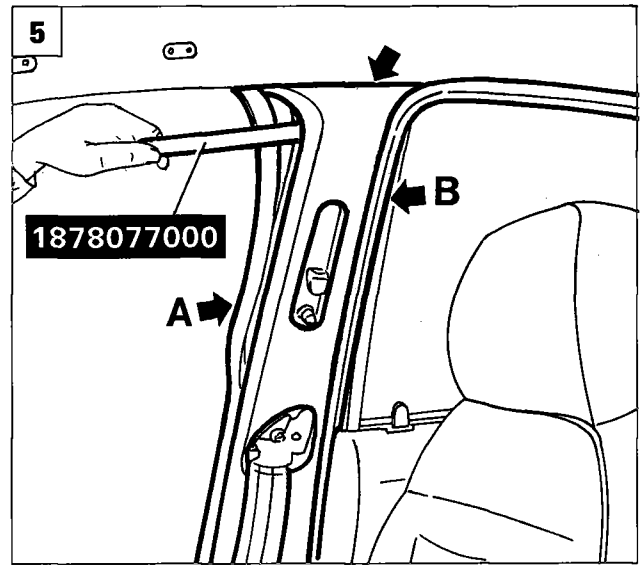

P4F105M04

4F105M

Pretensionatore meccanico cinture di sicurezza

70.

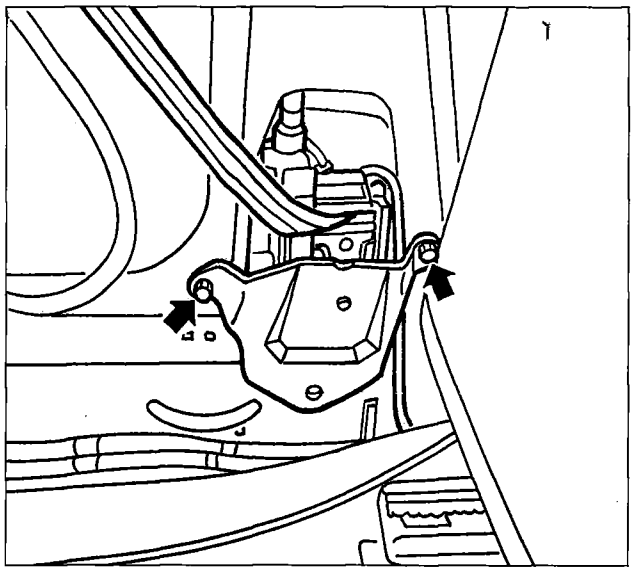

P4F106M01

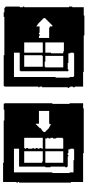

Prima di operare sul pretensionatore, rimuovere la staffa di armamento (vedere pagine precedenti).

ATTENERSI INOLTRE A TUTTE LE NORME DI SICUREZZA PRECEDENTEMENTE ILLUSTRATE.

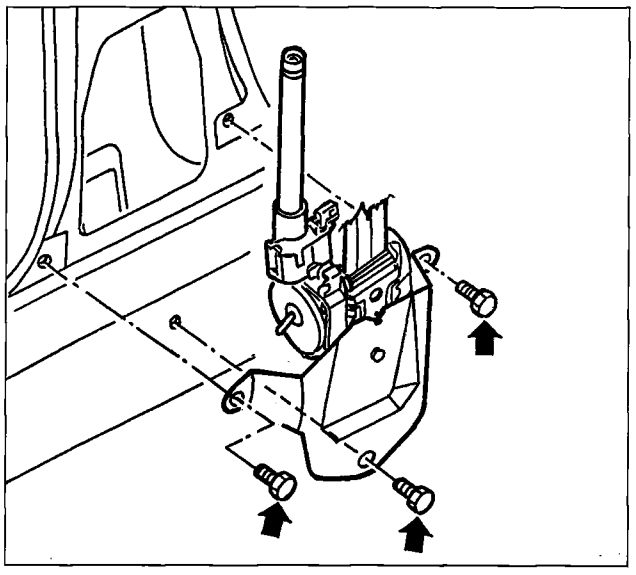

P4F106M02

- Rimuovere la cintura completa di pretensionatore, svitando le viti di fissaggio.

NOTA *Per il riattacco, invertire opportunamente la successione delle operazioni eseguite per lo stacco. Serrare a fondo le tre viti di fissaggio (**coppia prescritta 4 daNm**).*

A pretensionatore montato, rimontare una nuova staffa di armamento con le relative viti a frattura prestabilita.

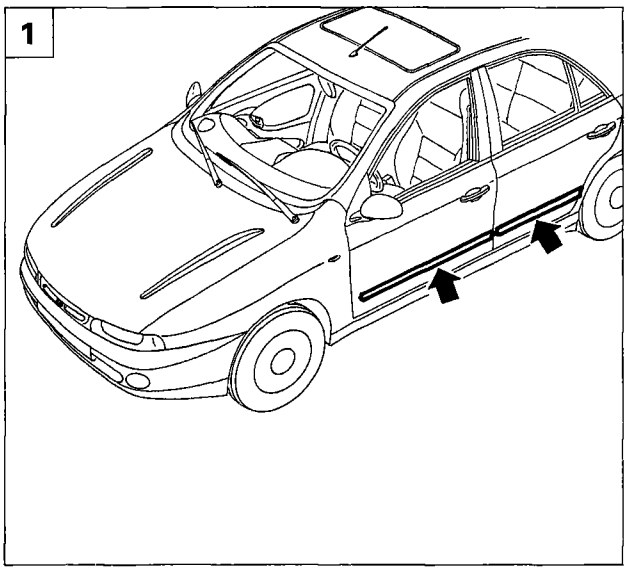

P4F063M01

REMOVING-REFITTING SIDE RUBBING STRIPS

1. The trims concerned are those illustrated in the diagram.

Removing

2. Heat the panel near the trim to be replaced to facilitate the removal of the double-sided tape from the bodyshell.
3. Working appropriately, using a plastic spatula, gradually remove the rubbing strip from the bodyshell; also remove the residues of the double-sided tape.

Do not reuse rubbing strips which have been removed.

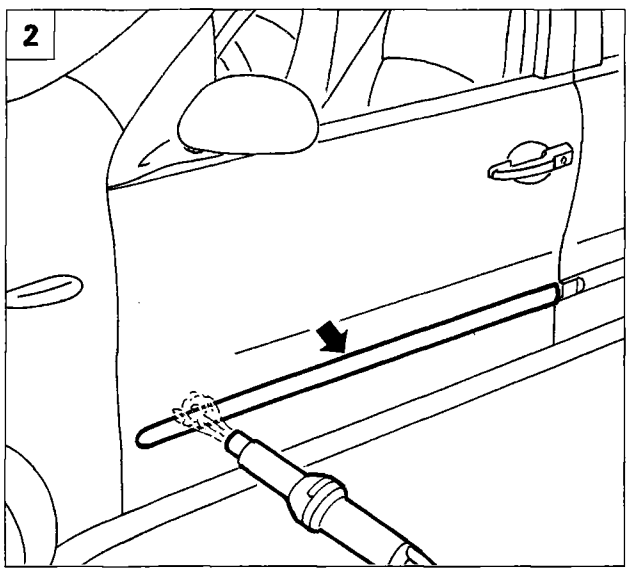

P4F063M02

Refitting

4. Thoroughly clean and degrease the area of the bodyshell where the trim is fitted using heptane.

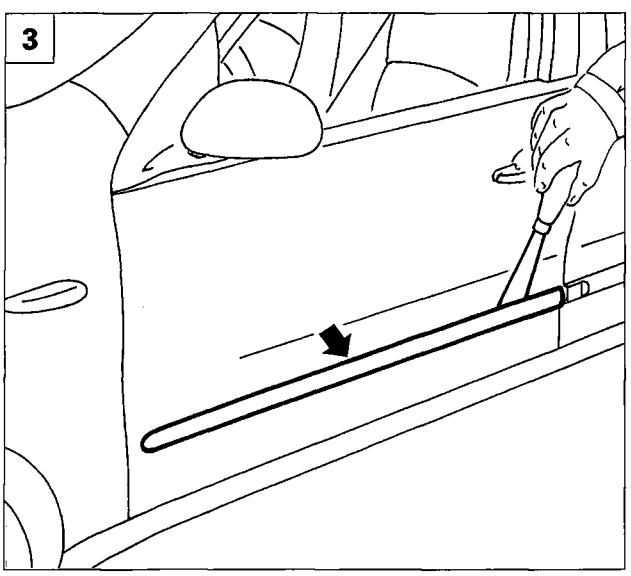

P4F063M03

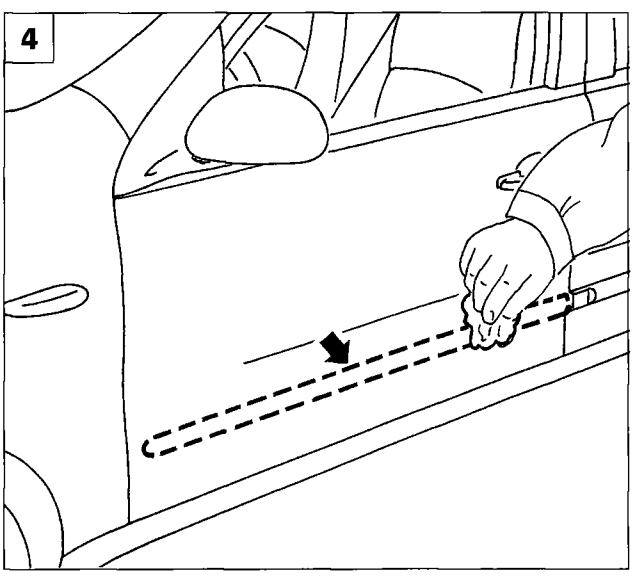

P4F063M04

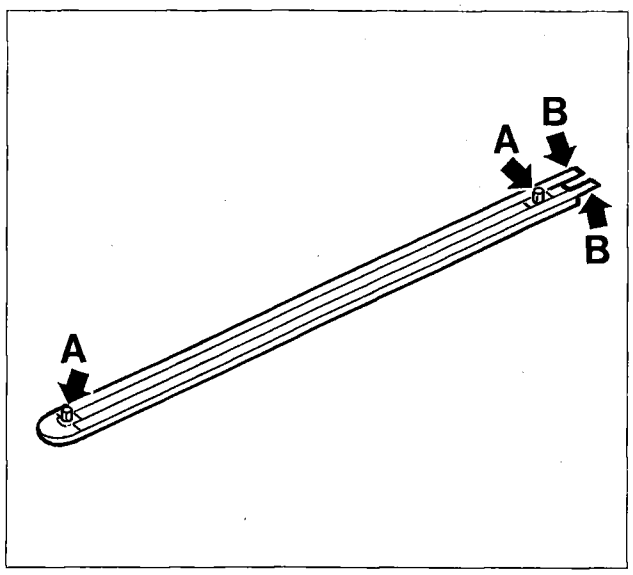

P4F064M01

- Check that the replacement trim has the protective caps for the fixing springs (A); check the condition of the protective film (B) on the double-sided tape.

The operations to the trim should be carried out with the temperature of the surrounding area of the bodyshell above 18° C (lower temperatures will alter the polymerization of the adhesive with adverse effects on the adhesion properties).

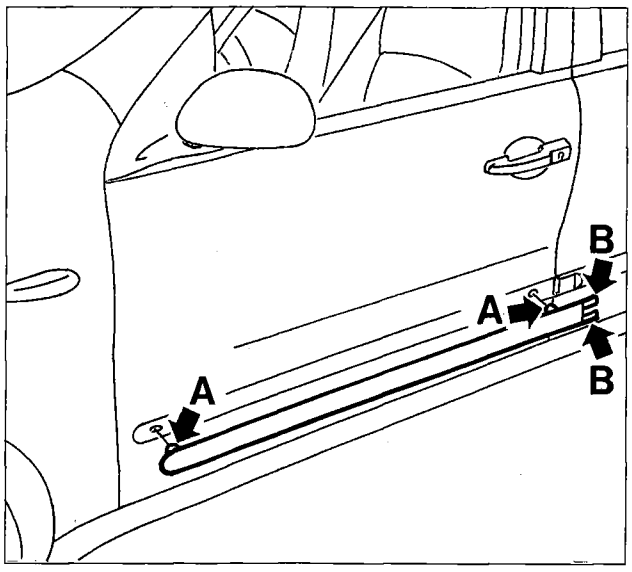

P4F064M02

- Check the alignment of the springs (A) fixing the trim with the openings in the bodyshell.
  Remove the protective film (B) from the double-sided tape and position the fixing springs (A) in the appropriate openings at the same time assisting the adhesion of the double-sided tape to the bodyshell, through gentle pressure applied manually along the entire trim.

It is absolutely forbidden to touch the adhesive surfaces with your hands.

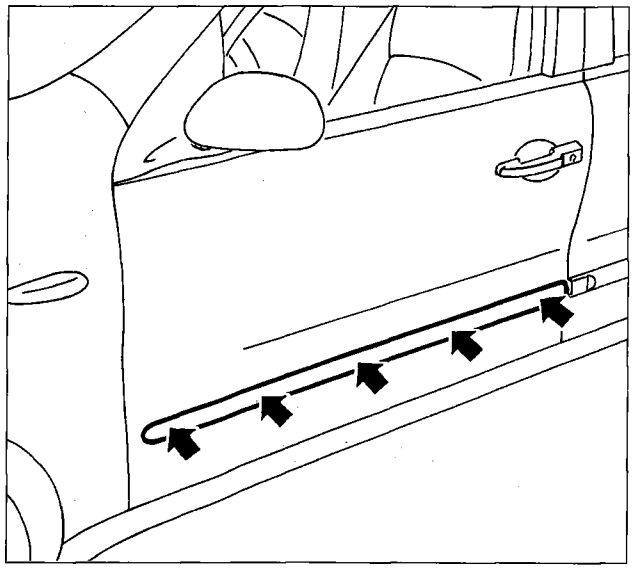

P4F064M03

- Exert constant pressure once again (10-20 daN) along the entire length of the trim to ensure that any air bubbles are completely expelled and the double-sided tape sticks perfectly to the surface of the bodyshell.

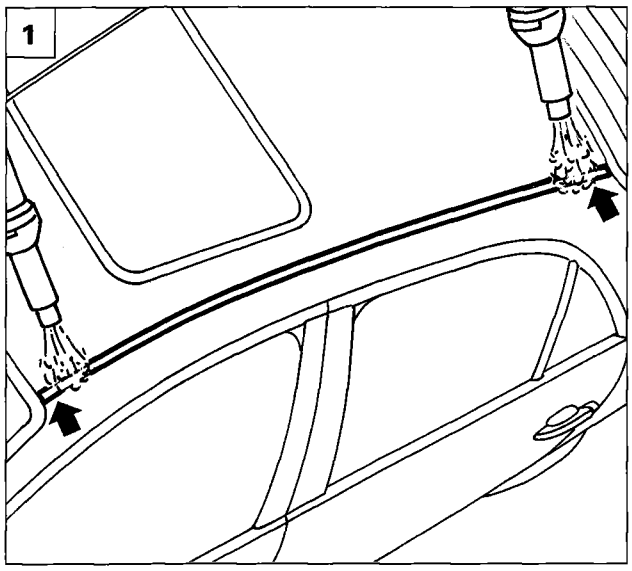

P4F065M01

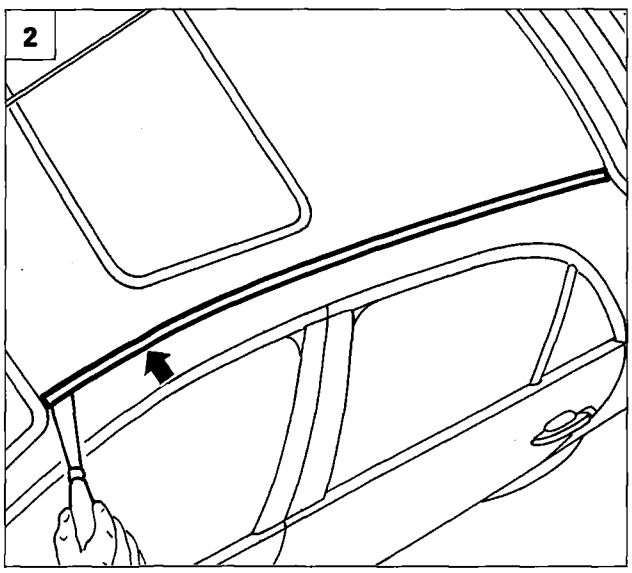

P4F065M02

REMOVING-REFITTING SIDE TRIMS ON ROOF PANEL

Removing

1. Heat the panel near the two ends of the trim to facilitate the removal of the two sections of double-sided tape from the roof panel (see figure 4, for the extension of the double-sided tape).
2. Working appropriately using a plastic spatula, gradually remove the trim from the roof; also remove any residues of double-sided tape.

Do not re-use the trim removed.

Refitting

3. Thoroughly clean and degrease the housing of the trim in the roof, using heptane, paying special attention to the areas where the double-sided tape will be stuck.
4. Check the condition of the protective film (A) on the double-sided tape on the replacement trim.

The sticking should be carried out with the temperature of the areas involved on the roof and the upper trim at 18° C (lower temperatures alter the polymerization of the adhesive with consequent deterioration of the sticking).

5. Insert the trim is the housing starting from the rear of the vehicle using the heated rear windscreen as a reference, removing the protective film (A) from the double-sided tape just before sticking.

It is absolutely forbiddent to touch the adhesive surfaces with ones hands.

6. Exert constant pressure (10-20 daN) once again on the areas of the double-sided tape to ensure perfect adhesion.

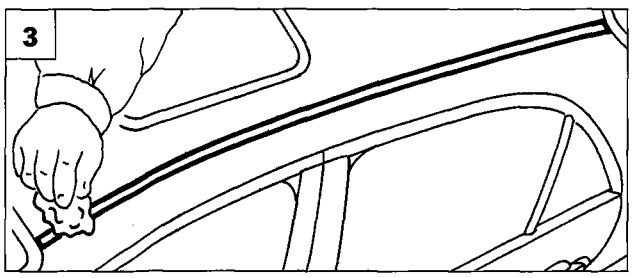

P4F065M03

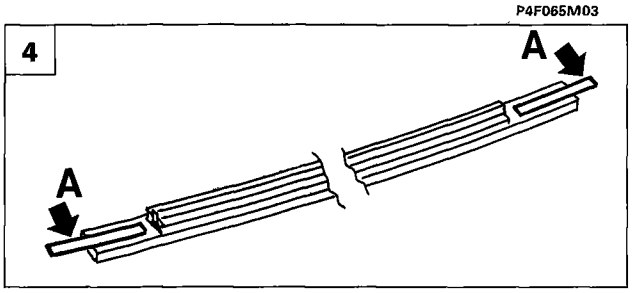

P4F065M04

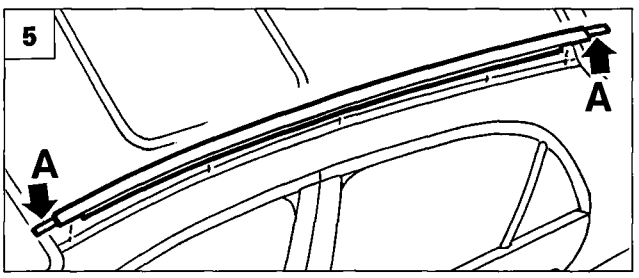

P4F065M05

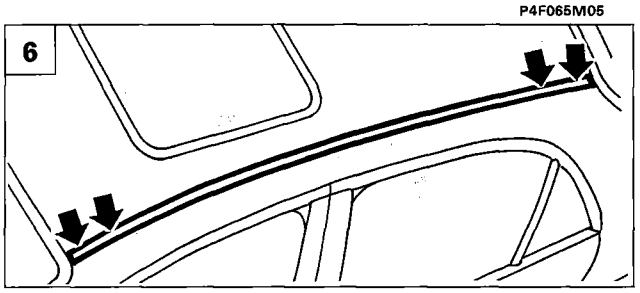

P4F065M06

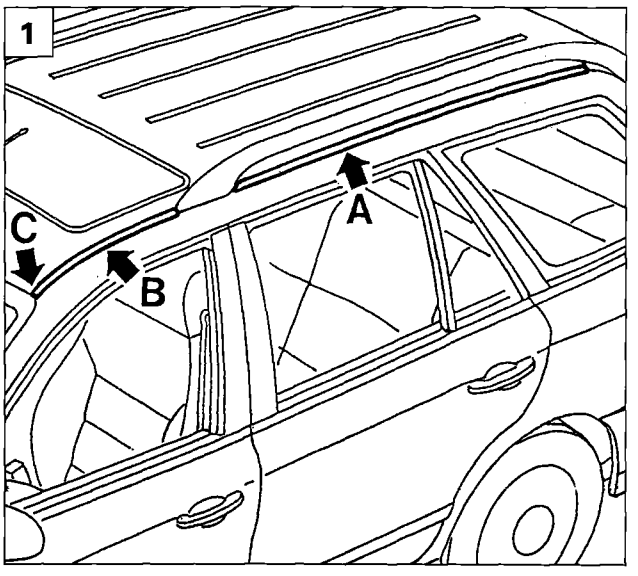

P4F066M01

REMOVING-REFITTING SIDE TRIMS ON ROOF PANEL

Removing

1. In order to remove the rear trim (A) it is necessary to disconnect the roof rail from the rear side (see pages which follow). The trim (B) is stuck to the front end (C) with double-sided tape (see fig. 4 for the extent of the double-sided tape) therefore the panel near the end involved must be heated to facilitate the removal of this double-sided tape.
2. Working appropriately using a plastic spatula, gradually remove the trim from the roof panel, removing it underneath the rail (A); also remove the residues of double-sided tape.

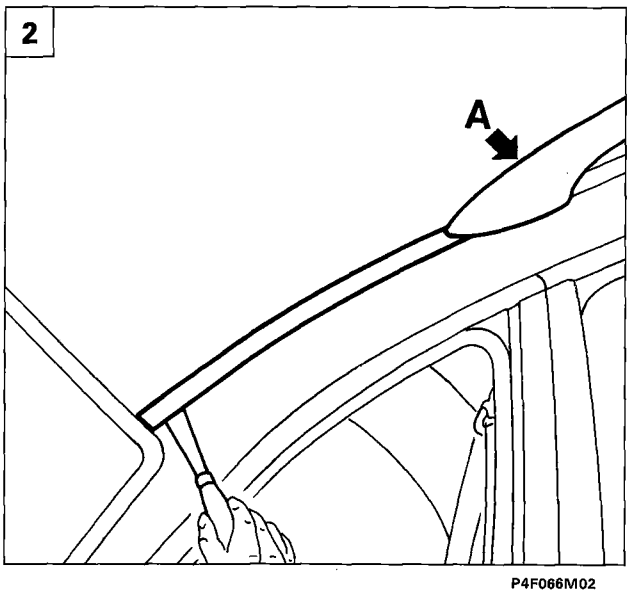

P4F066M02

Do not re-use the trims removed.

Refitting

3. Thoroughly clean and de-grease the housing of the trim in the roof using heptane, paying special attention to the area where the double-sided tape will be stuck.
4. Check the condition of the protective film (A) on the double-sided tape on the replacement trim

The sticking of the double-sided tape should be carried out with the temperature of the areas of the roof and trim involved above 18° C (lower temperatures alter the polymerization of the adhesive with consequent deterioration of the sticking)

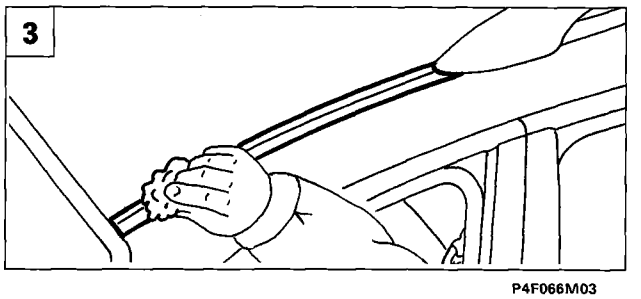

P4F066M03

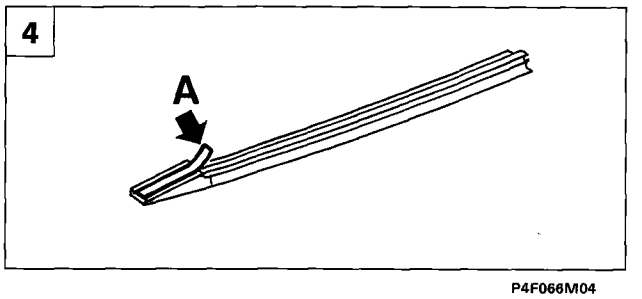

P4F066M04

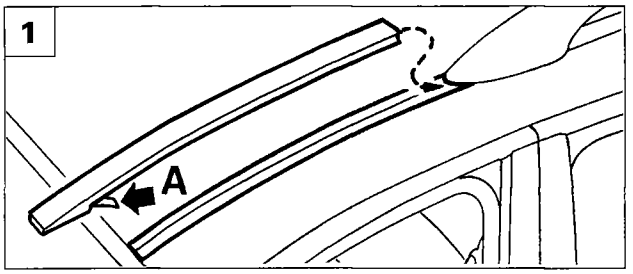

P4F067M01

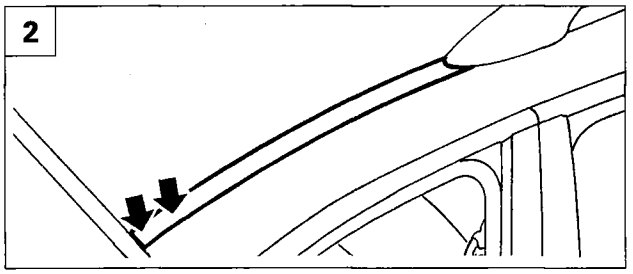

P4F067M02

1. Insert the trim in the housing removing the protective film (A) from the double-sided tape, just before sticking.

IT IS ABSOLUTELY FORBIDDEN TO TOUCH THE ADHESIVE SURFACES WITH YOUR HANDS.

2. Exert constant pressure (10-20 daN) in the area of the double-sided tape to ensure perfect adhesion.

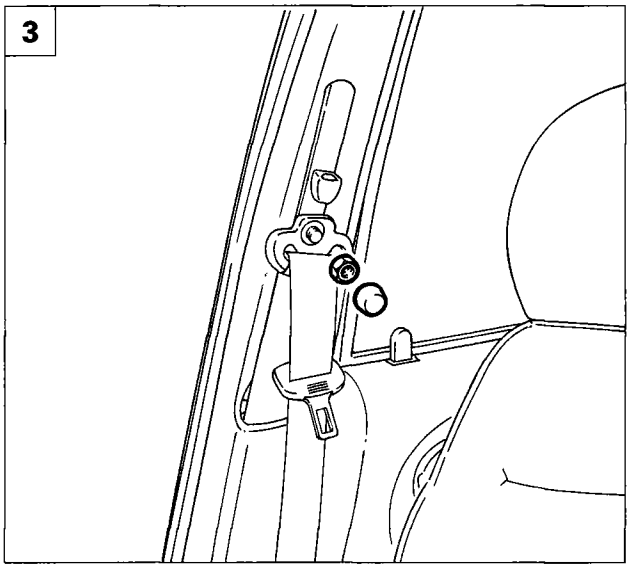

P4F067M03

REMOVING-REFITTING ROOF RAIL

- Remove the rear light cluster following the instructions in Section 55 - Electrical equipment.
- Remove the front and rear passenger grab handles following the instructions in the specific paragraph.
- Remove the luggage compartment pillar cover, following the instructions in the specific paragraph.

3. Remove the fixing cover and undo the height adjustment nut for the front seat belt.
4. Remove the bolt cover, then undo the bolt fixing the pillar cover.
   Move the door housing seal (A) aside by the roof lining.

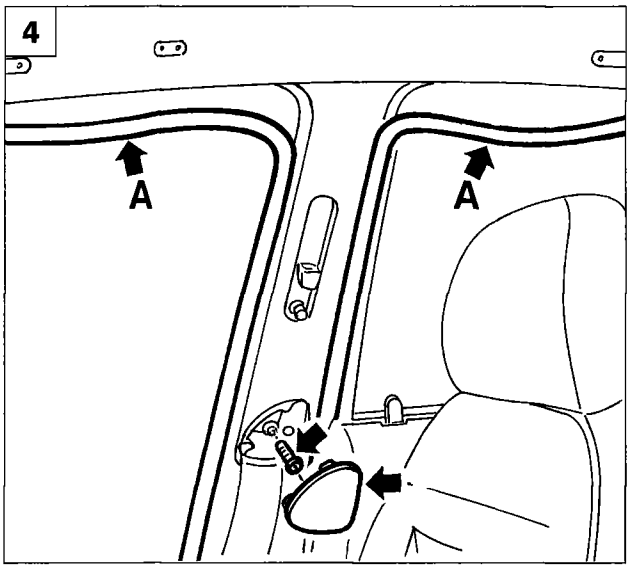

P4F067M04

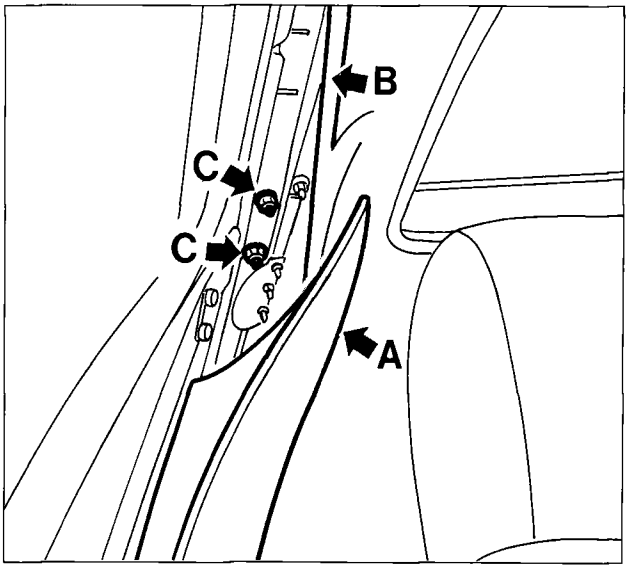

P4F068M01

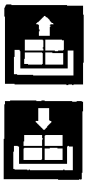

- Move the upper part (A) of the centre pillar inner cover and the edge (B) of the roof lining gently aside, then undo the bolts (C) fixing the roof rail.

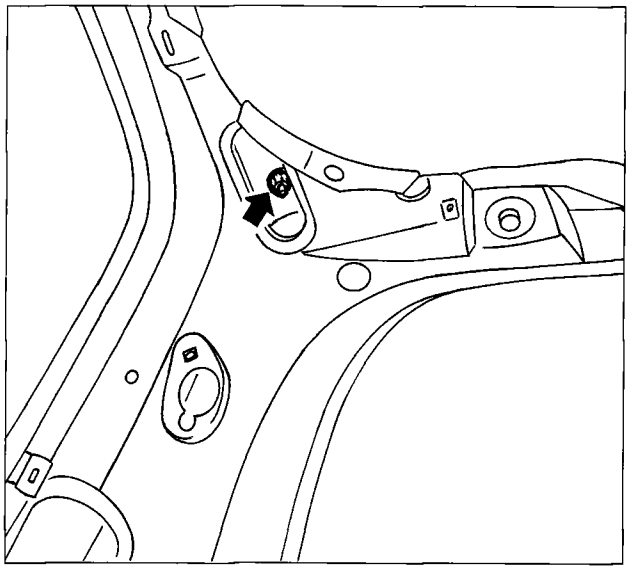

P4F068M02

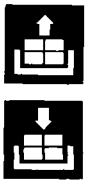

- From inside the rear pillar, undo the bolt shown fixing the roof rail.

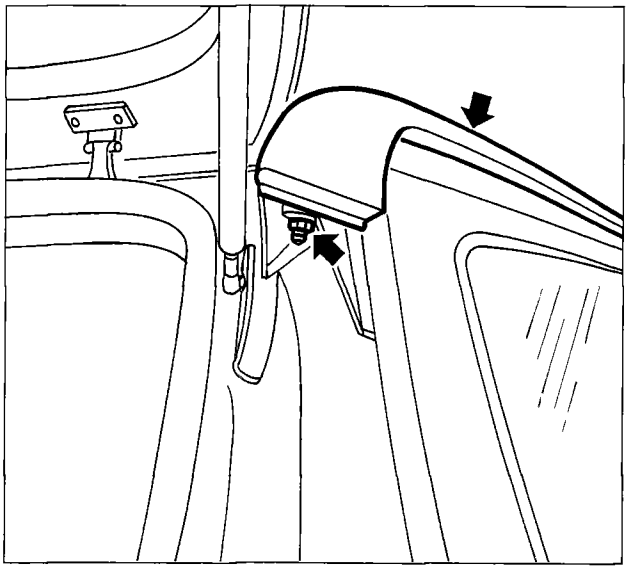

P4F068M03

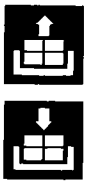

- From outside the rear pillar, undo the bolt shown and remove the roof rail.

NOTE *To refit, simply reverse the order of the operations carried out for the removal.*

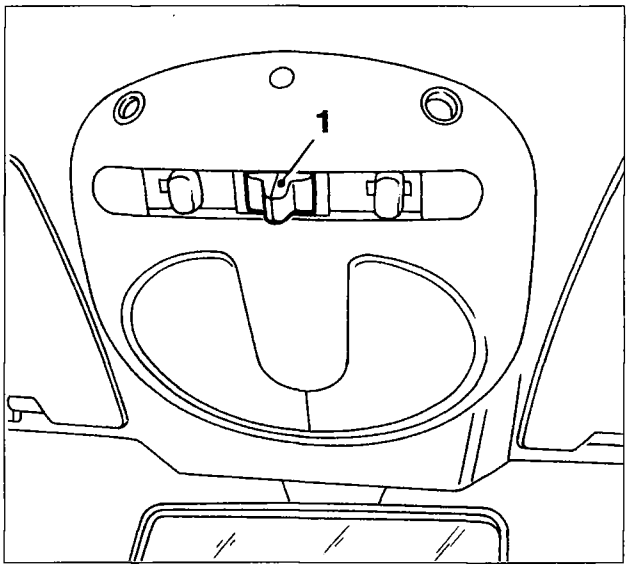

P4F31AM01

INTRODUCTION

The sun roof is electrically operated. It has a glass closing flap which allows 25% of light and energy to pass. Its complete or partial opening is controlled by a button (1) on the upper courtesy light.

The opening of the sun blind is manual and independent of the operation of the sun roof.

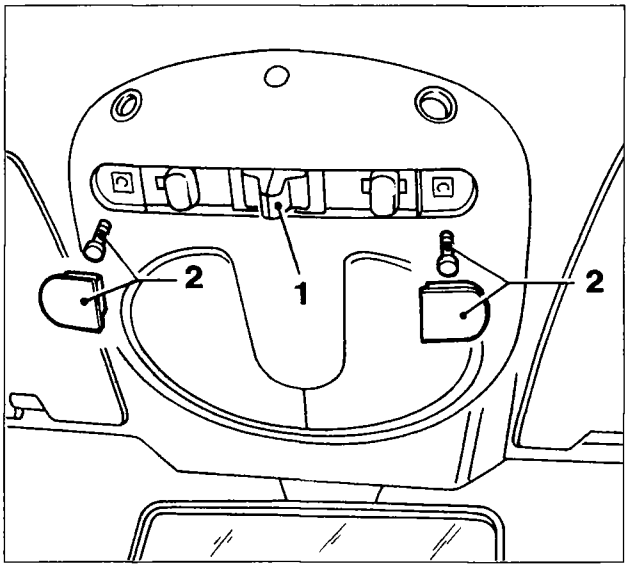

P4F31AM02

Emergency manoeuvre

If the electrically operated device fails, the sun roof can be operated manually, proceeding as follows:

- remove the caps and the bolts (2);
- extract the special key (3) from inside the courtesy light;
- insert it in the special splining in the electric motor, then rotate and move the roof.

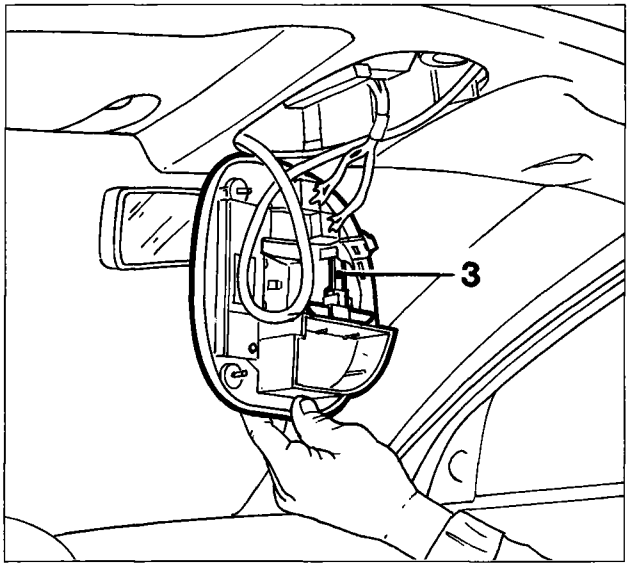

P4F31AM03

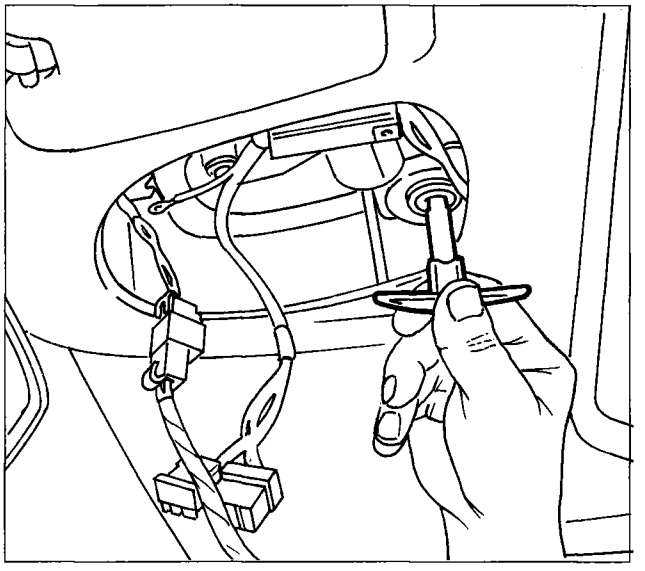

P4F31AM04

Copyright by Fiat Auto

Dismantling the vehicle

Remove the parts shown in the diagram; see the specific paragraphs for the removal procedures. The are numbered in the order of dismantling.

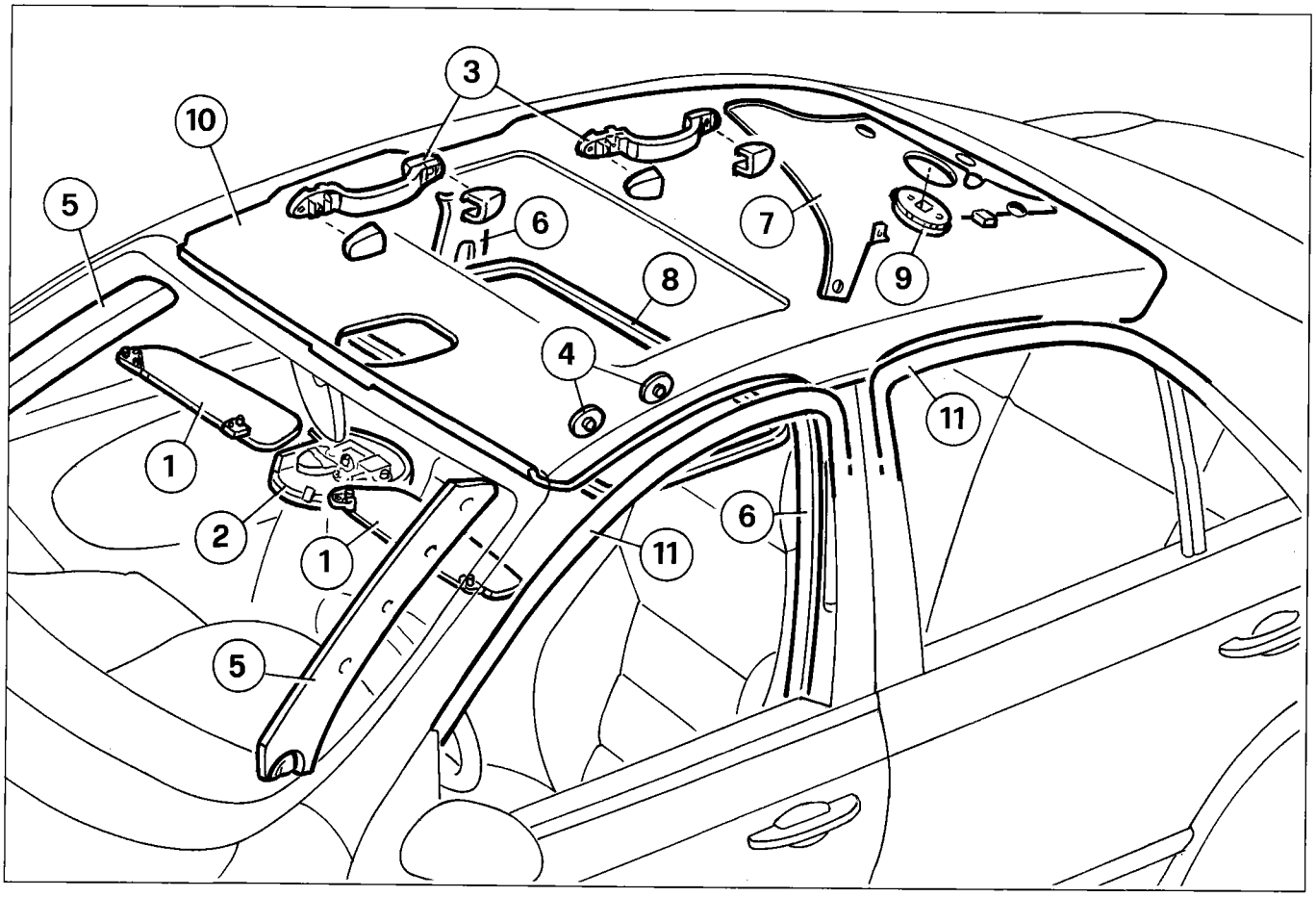

P4F32AM01

1. Sun visors and attachments
2. Front courtesy light
3. Grab handles
4. Roof lining fixing trims
5. Front pillar covers
6. Centre pillar covers
7. Rear pillar covers
8. Sun roof flap trim
9. Rear courtesy light
10. Roof lining
11. Door housing seals

Dismantling the vehicle

Remove the parts shown in the diagram: see the specific paragraphs for the removal procedures. The parts are numbered in order of dismantling

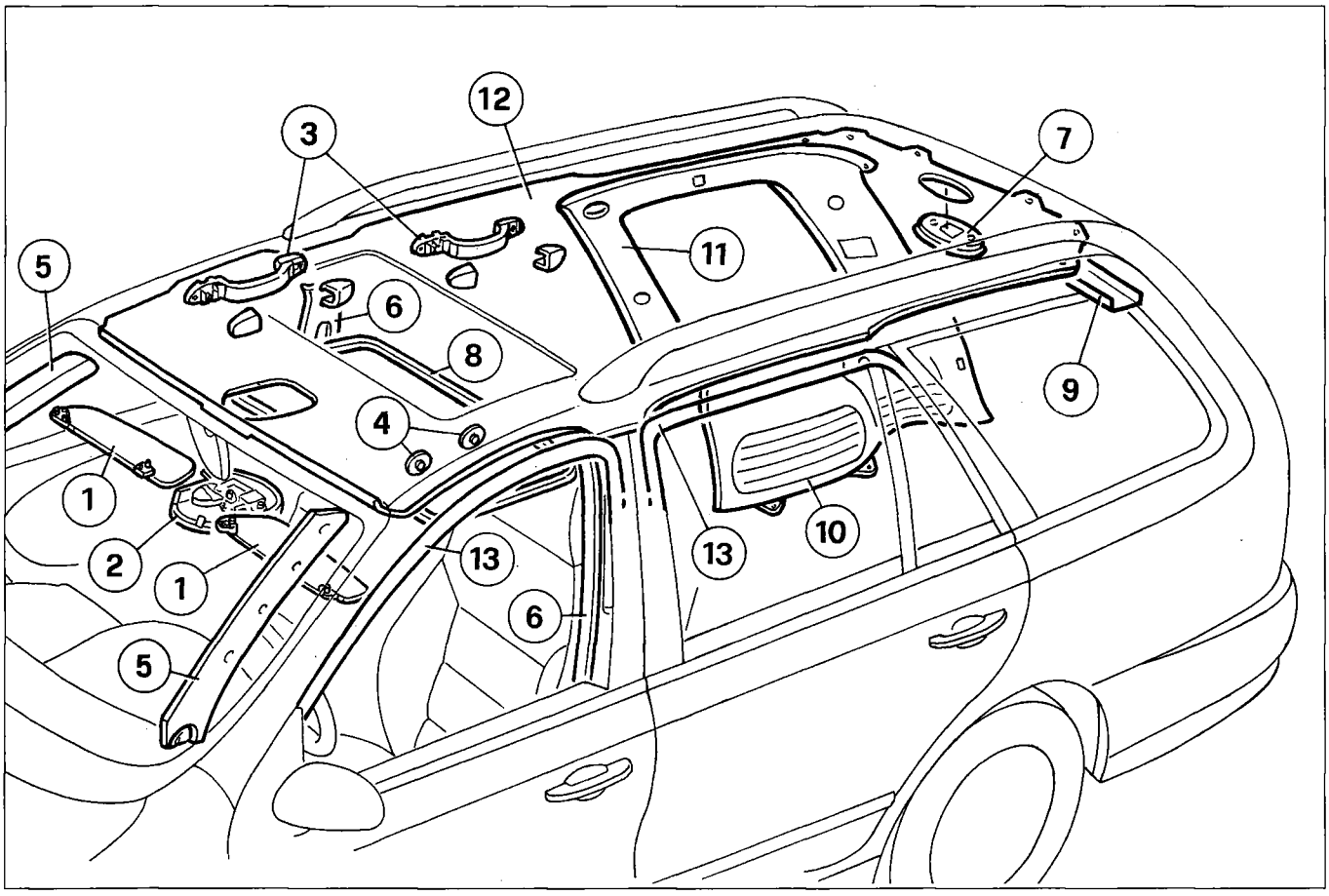

P4F33AM01

1. Sun visors and attachments
2. Front courtesy light
3. Grab handles
4. Roof lining fixing trims
5. Front pillar covers
6. Centre pillar covers
7. Rear courtesy light
8. Sun roof flap trim
9. Upper luggage compartment covering
10. Luggage compartment side lining
11. Luggage compartment pillar cover
12. Roof lining
13. Door housing seals

Copyright by Fiat Auto

70.

REMOVING-REFITTING COMPLETE ROOF

After dismantling the internal components (see previous pages), proceed with the removal of the complete sun roof, following the instructions given below:

- disconnect the water drainage pipes (1);
- undo the centre bolt (2) and the nuts (3) on the frame front cross member; (3);
  working from the side, remove the nuts (4) and the bolts (5);

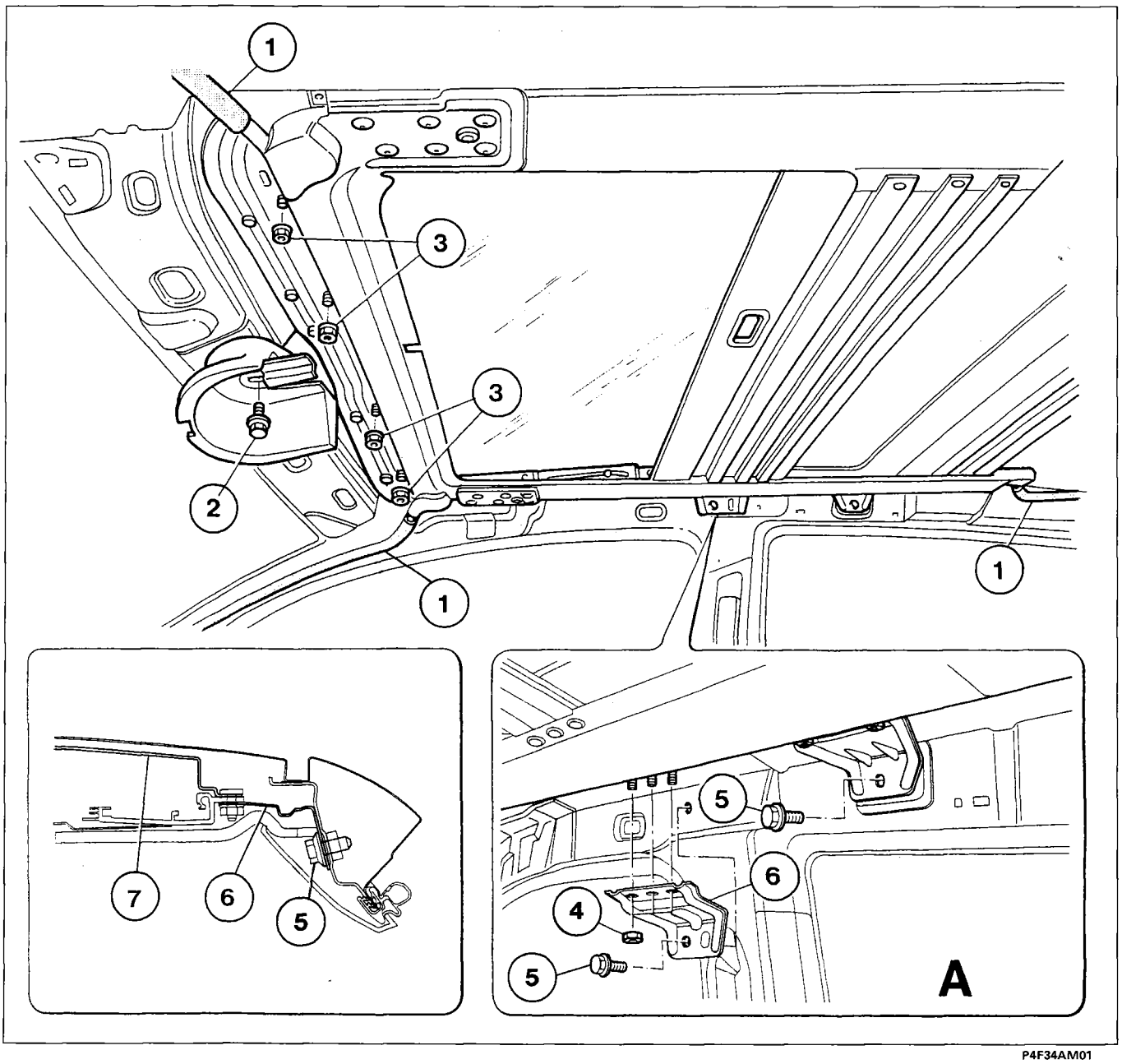

P4F34AM01

NOTE *The centre brackets (6) are connected to the roof rib (7); to remove the sun roof frame, completely disconnect them (see detail A).*

DISMANTLING-REASSEMBLING COMPLETE SUN ROOF

To remove the sun roof, proceed as described below:

- Remove the window (1) from the pullies (6) via the bolts (9). Remove the water collection duct (8). Remove the sun visor (2) releasing it from the guides (see detail A).
- Remove the electric motor (3).
- Remove the terminals (4) (water drainage) stuck with Betaseal polyurethane type sealant.
- Undo the two end of travel bolts (5).
- Extract the pullies (6) after having moved them into the end of travel position.
- Remove the Bowden drive cable (10).
- Remove the deflector (7).

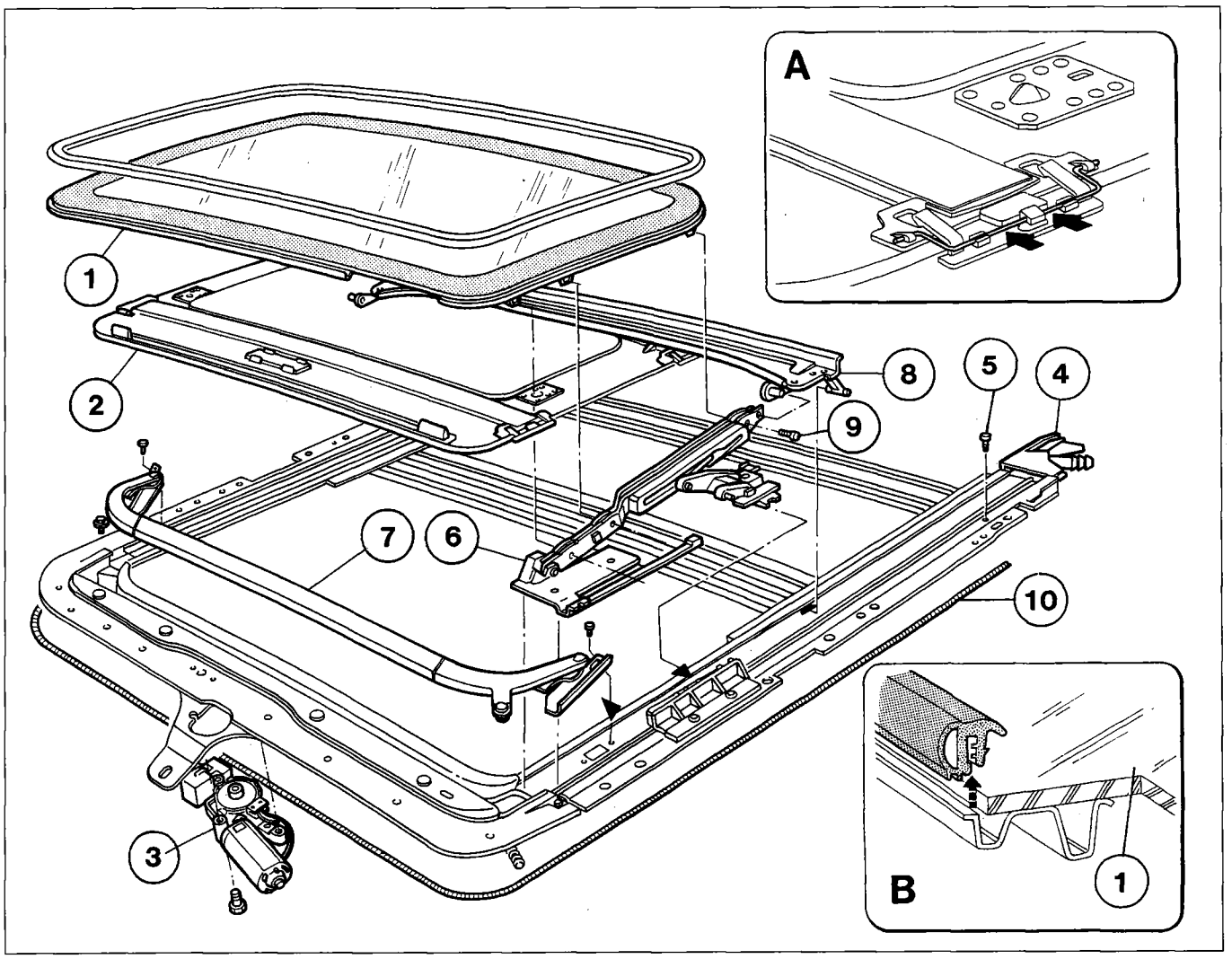

P4F35AM01

The bolts (9) securing the glass are treated with special adhesive.
After the equivalent of six travels for the actual bolt it is no longer effective. ONLY THESE TYPE OF BOLTS SHOULD BE USED.

NOTE *The following components can be removed with the assembly on the vehicle: window (1); seal (detail B); electric motor (3); sun visors (2).*

When refitting, lubricate the sliding parts with MOLYKOTE PG 30 L type grease or an equivalent product.

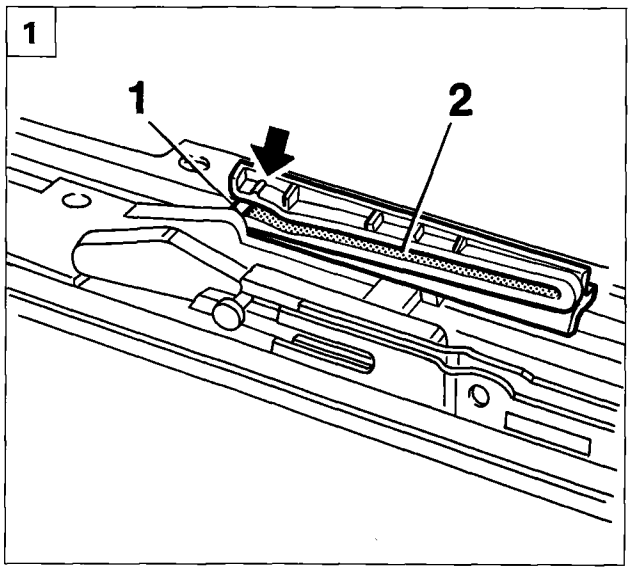

P4F36AM01

ADJUSTMENTS DURING REFITTING

Adjusting the opening device.

For the correct synchronism between the electrical operation and the opening/closing of the roof, the parts concerned must be adjusted as follows:

1. position the rollers (1) for the pullies exactly at the start of the sliding duct (2), before the reference shown by the arrow;

2. refit the electric motor with the reference (A) by the micro-switch (3);
- lastly, refit the window.

Adjusting the window

3. If necessary, adjust the alignment of the window with the profile of the roof using the slots in the frame (4).

Adjusting the spoiler

4. There are two slotted openings (shown by the arrows) in the edges of the spoiler (5) for fixing and alignment with the vehicle profile.

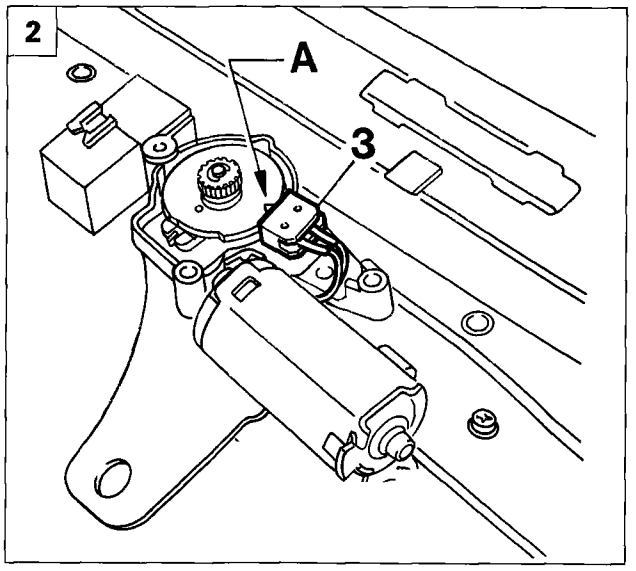

P4F36AM02

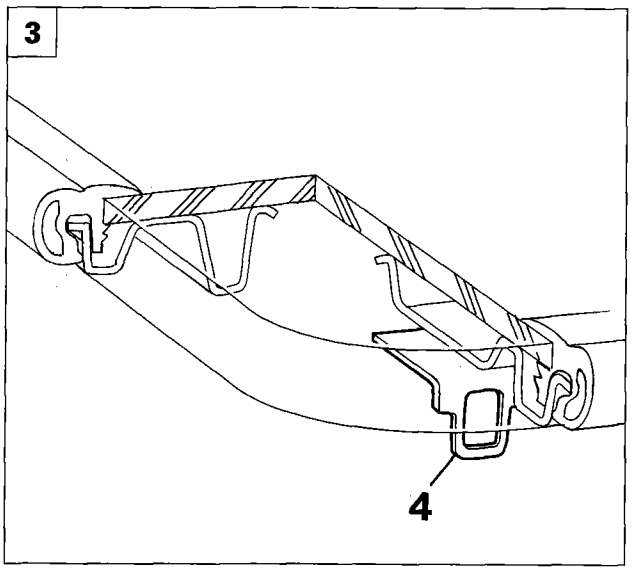

P4F36AM03

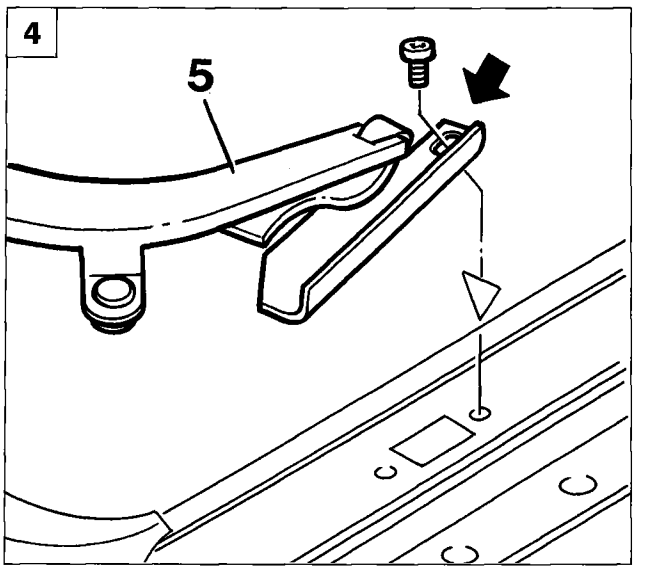

P4F36AM04

BONDED WINDOWS

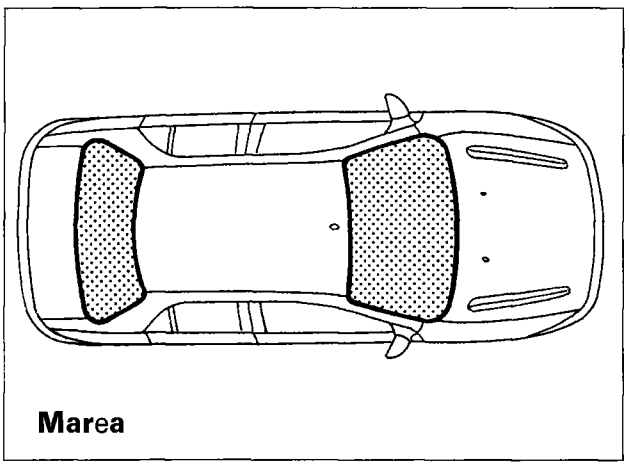

P4F075M01

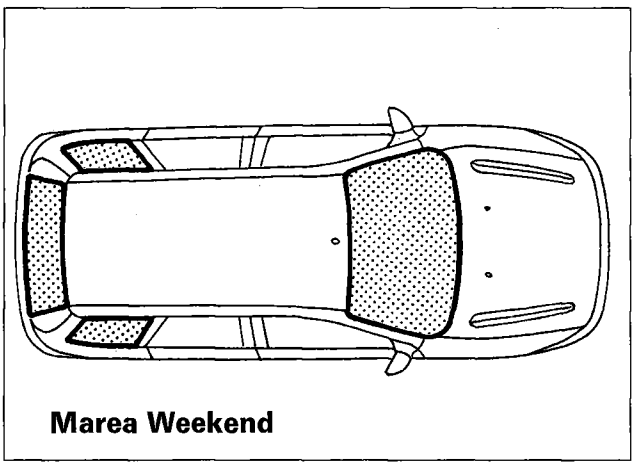

P4F075M02

EQUIPMENT

To remove and refit the bonded windows, use the products and the equipment described below

Composition of bonding Kit

1. Cartridge of GURIT BETASEAL sealant
2. 1/2 Cartridge of GURIT BETASEAL sealant
3. Adhesion promoter (primer) for glass
4. Container of degreasing product
5. Cloth for degreasing
6. Wad for applying adhesion promoter (primer)
7. Wire
8. N° 2 nozzles

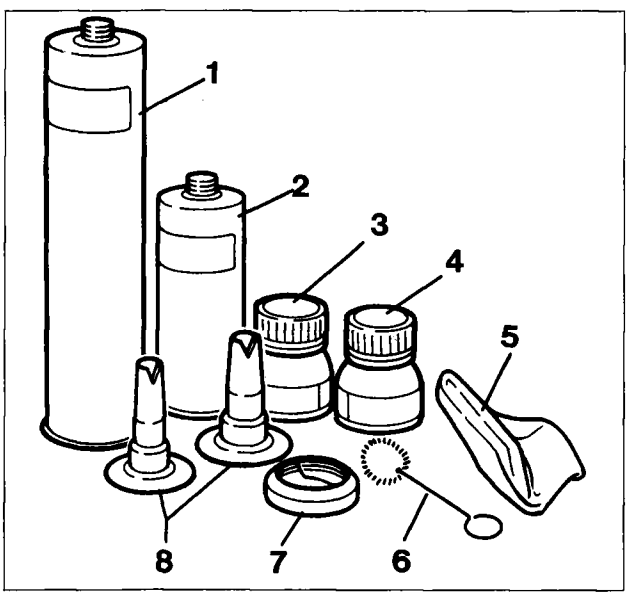

P4F17AM02

The previous adhesive, marketed by Direzione Marketing e Commerciale - Volvera, has been replaced with an improved product. It is BETASEAL 1703 Sprint, a single component polyurethane with rapid polymerization. This confers undoubted advantages because the hardening speed of the adhesive is faster and the time the window has to be retained using the special tools is shorter. In addition the repaired vehicle can be handed back to the Customer more quickly.
Its mechanical properties conform with the Fiat Auto S.P.A. terms.

Copyright by Fiat Auto

70.

Thermal knife

This consists of a piece of equipment which heats up a blade to facilitate cutting the sealant.
The temperature of the blade can be adjusted up to 700 °C, but it is advisable to use the knife up to a temperature of around 150 °C in order to avoid burning the sealant and producing harmful fumes. The knife is, however, fitted with a fume exhaust system.

Different shaped blades are available to adapt to different cutting conditions.
It is important that during the cutting the blade is always kept perfectly parallel to the window to avoid excessive force and the risk of possibly breaking the actual window.

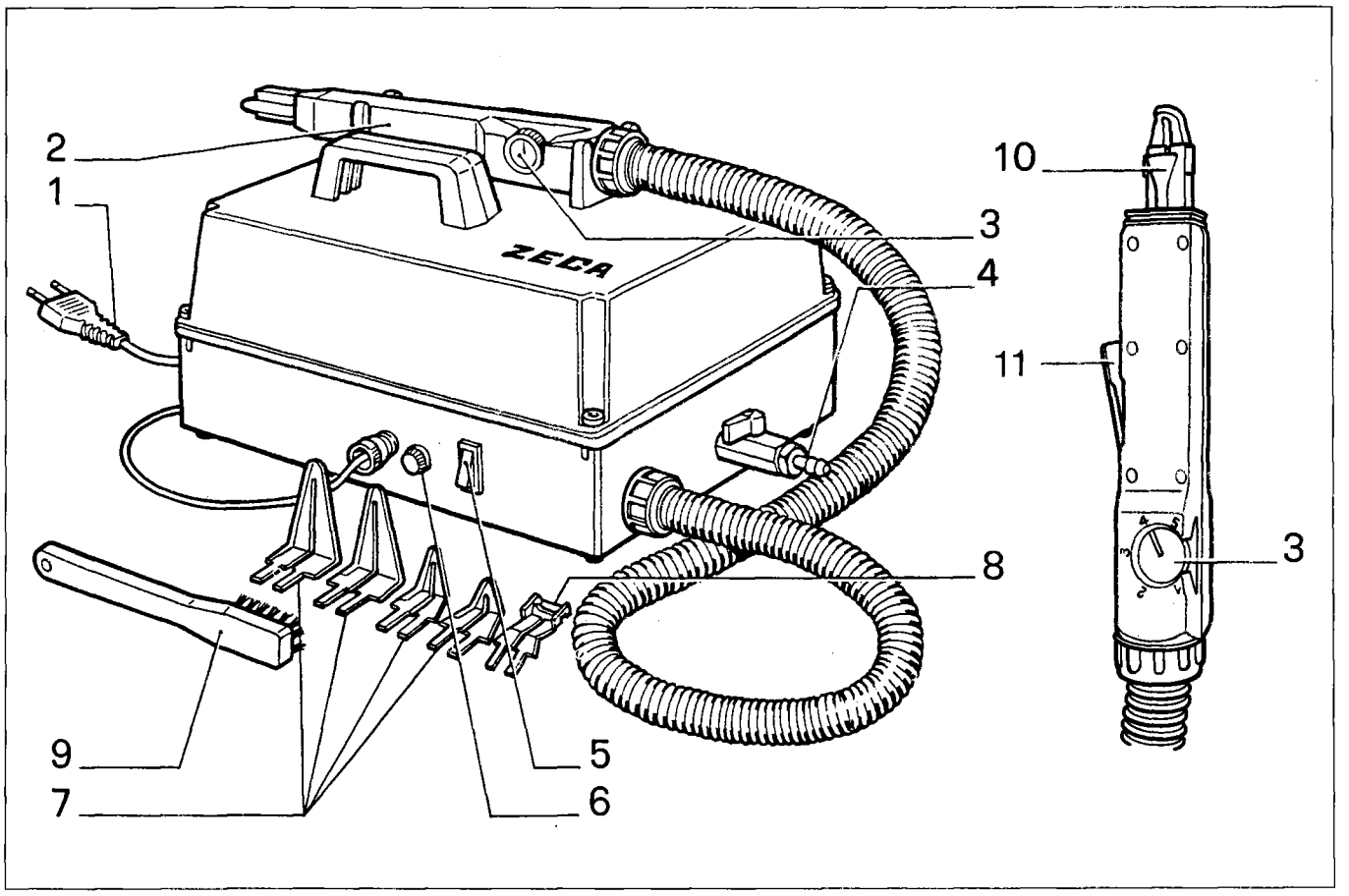

P4F18AM01

1. Supply socket
2. Knife casing
3. Temperature adjustment knob
4. Compressed air tap
5. On switch
6. Protective fuse
7. Blades for cutting
8. Blade for levelling
9. Blade cleaning brush
10. Fume intake nozzle
11. Contact lever

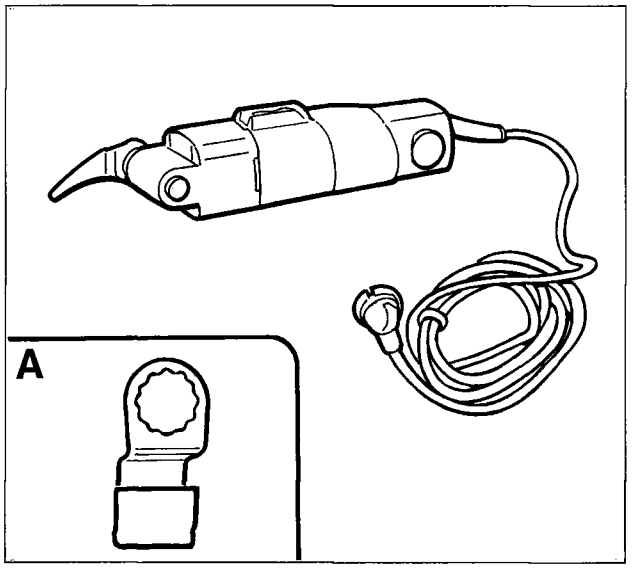

P4F19AM01

Vibrating knife

The vibrating knife is made up of special shears and a set of vibrating blades with a number of electrically adjustable oscillations. It can be used to cut polyurethane sealants. It is important that during the cutting the blade is always kept parallel to the window and the bodywork, to prevent the blade from breaking.

To prevent the shears from overheating, it is useful to adjust the advance and the number of oscillations according to the conditions of usage.
Detail A shows the scraper to be fitted to the vibrating shears to level the residues of sealant.

Do not use lubricants during cutting. The blades should always be sharpened.

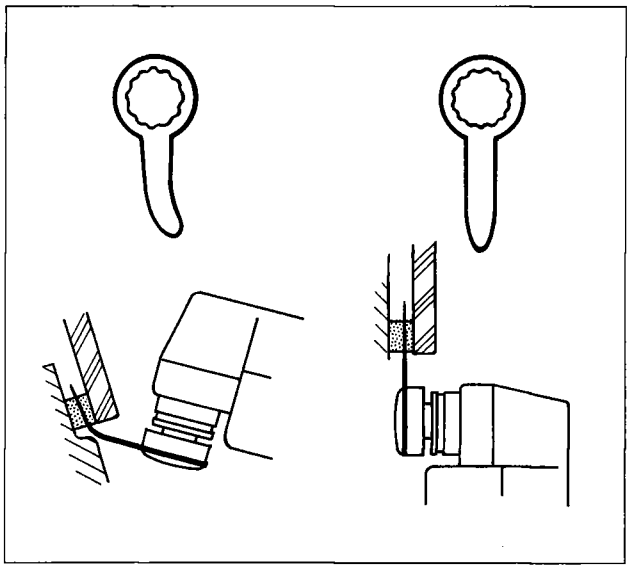

P4F19AM02

The diagrams at the side and underneath illustrate several situations which recur when cutting bonded windows showing the type of blade required.

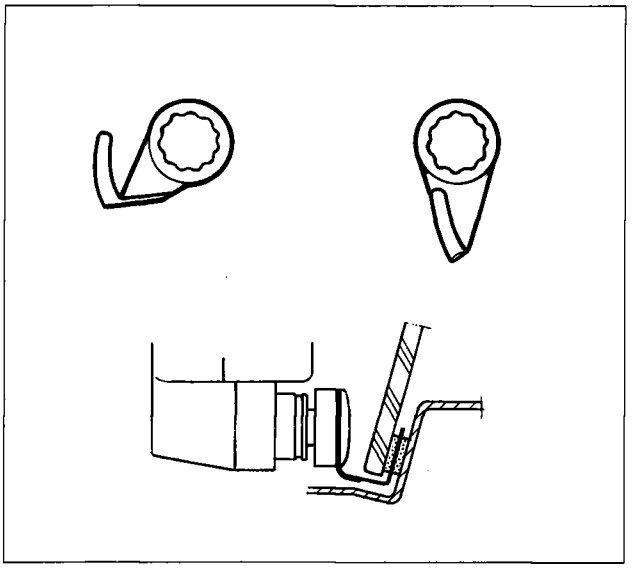

P4F19AM03

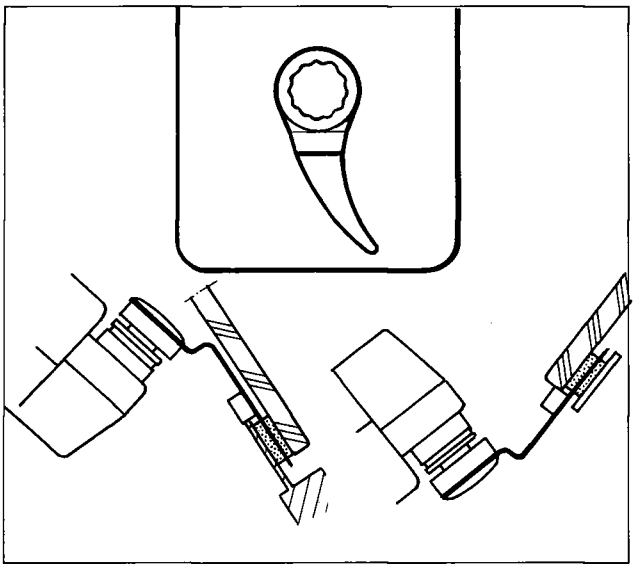

P4F19AM04

Copyright by Fiat Auto

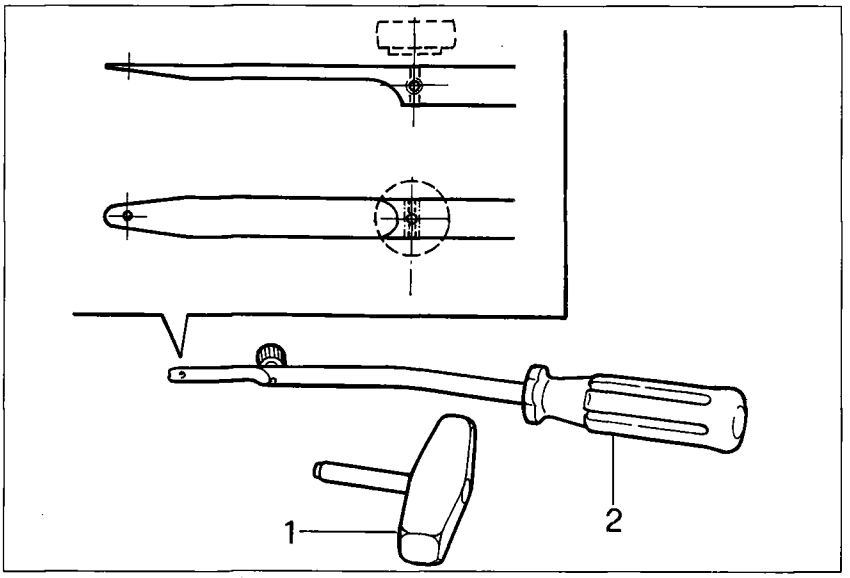

P4F20AM01

Wire

In order to cut the sealant using the wire, it is necessary to use the tool illustrated in the diagram.

1. Traction handle
2. Retaining tool

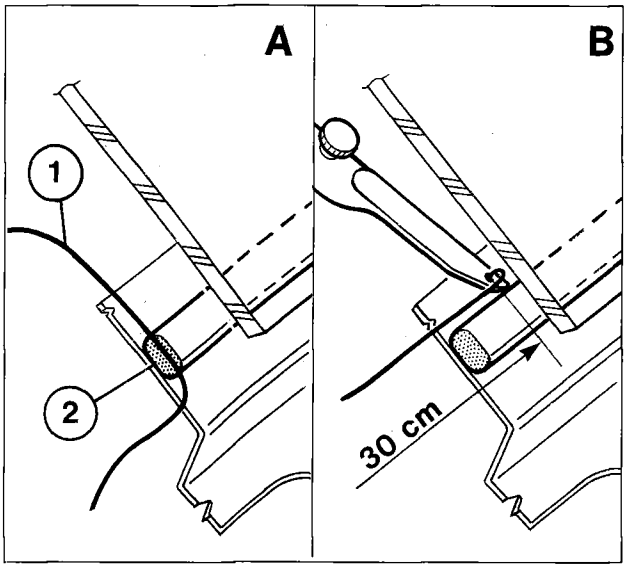

P4F20AM02

Method for using wire in the bonding Kit

Cut a segment of wire about 50 cm long, introduce one end of the wire (part 1 detail A) through the sealant (part 2 detail A) (to facilitate the operation, heat the wire and use pliers).
Fix one end of the wire to the retaining tool inside the vehicle and the other end to the traction handle outside the vehicle. The operator inside the vehicle should introduce the retaining tool in the sealant (detail B) about 30 cm from the point where the wire passes through.

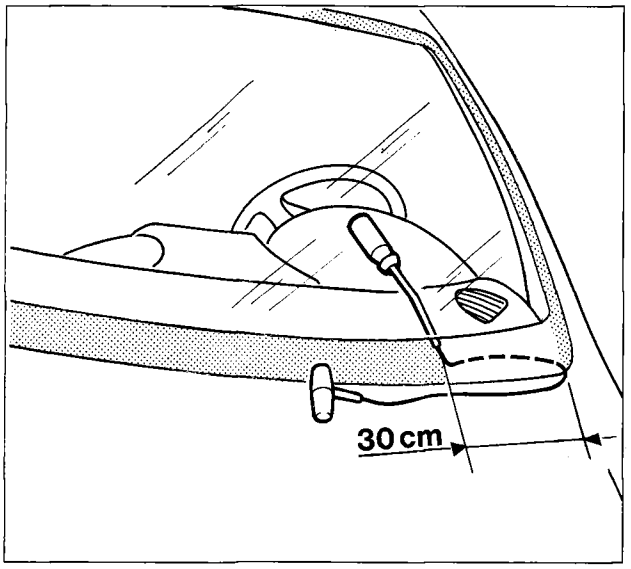

P4F20AM03

The other operator, outside the vehicle, should pull the handle following the surround of the windscreen and cut the sealant.

Repeat the operation for 30 cm sections, reducing the length at the corners of the window so that the sealant is completely cut.

REPLACING THE FRONT WINDOW GLASS (WINDSCREEN)

Dismantling and protecting the vehicle

Remove the parts shown in the diagram: see the specific paragraphs for the removal procedure. The parts are numbered in order of dismantling

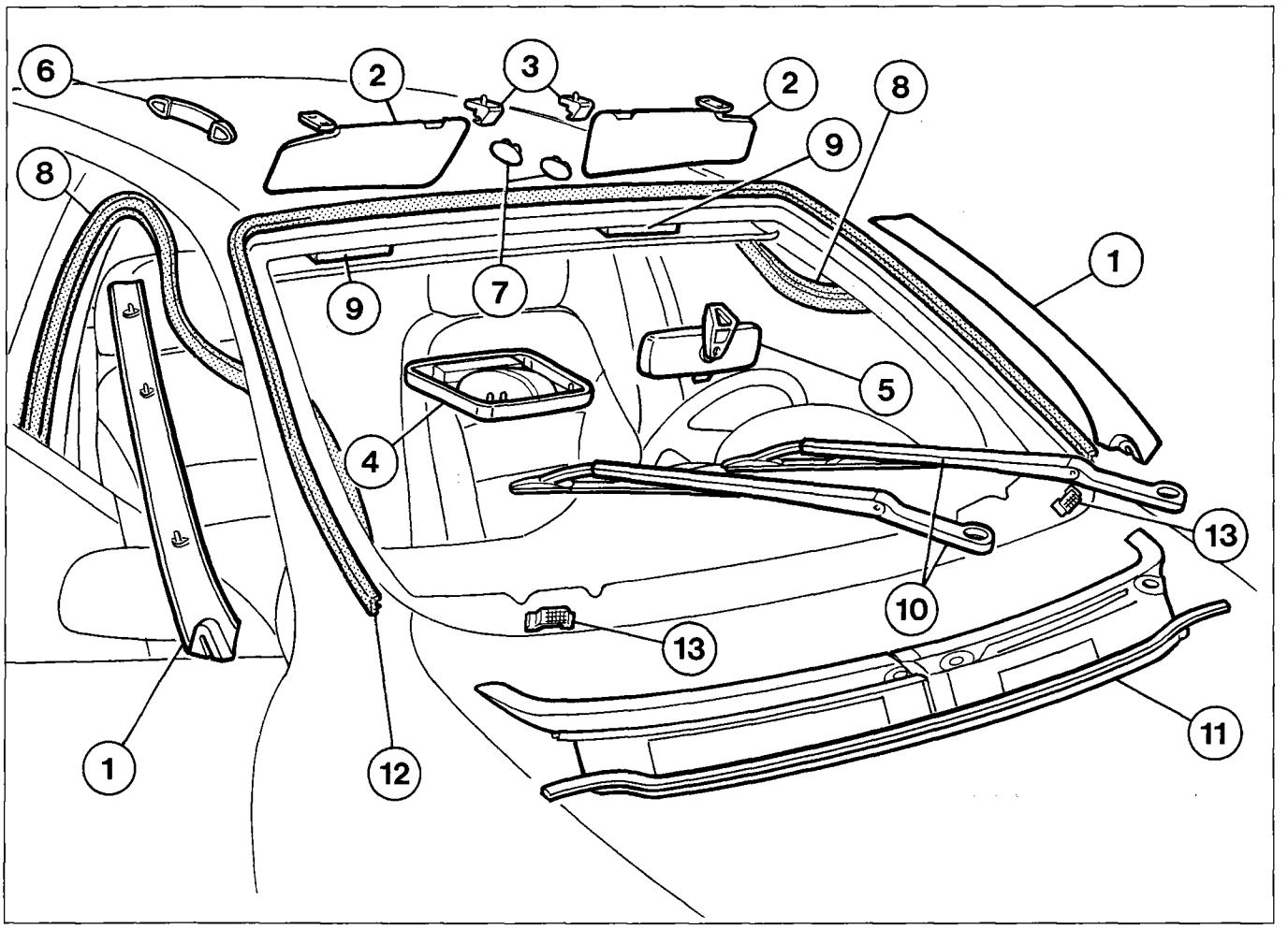

P4F21AM01

1. Pillar covers
2. Sun visors
3. Sun visor attachment
4. Courtesy light
5. Rear view mirror
6. Grab handle
7. Roof lining fixing trims
8. Door seals
9. Spacers
10. Windscreen wiper blades
11. Lower cover
12. Perimeter trim
13. Retaining mountings

- Gently lower the lining under the roof without distorting it.
- Protect the dashboard and the seats with a suitable cloth or paper.
- Press on the retaining mountings (13) and push them downwards.
- Protect the perimeter of the windscreen housing with adhesive tape.

The perimeter trim (12) for the window should always be replaced.

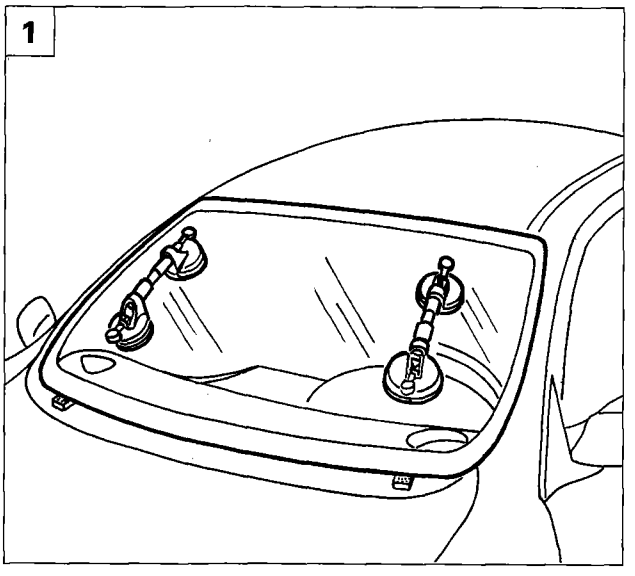

P4F080M01

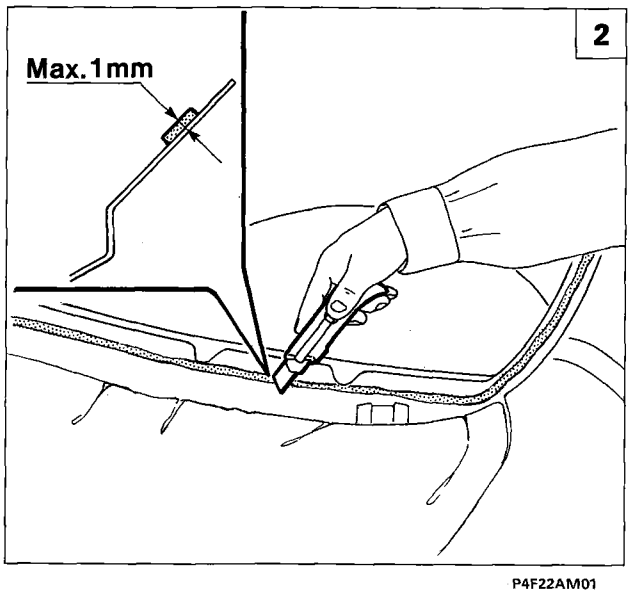

P4F22AM01

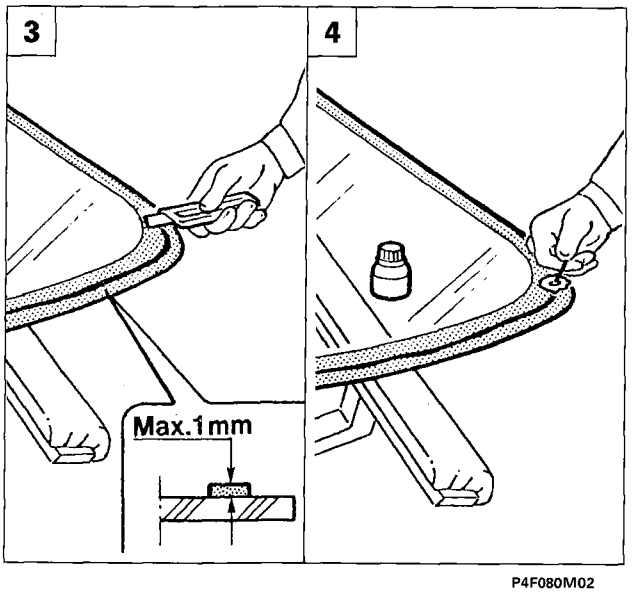

P4F080M02

Removing front window glass

1. Proceed with the removal of the window from the bodyshell, following the instructions on the previous pages.
   Remove the window from its housing using the special suction pads.

Preparing the windscreen housing

2. Using a suitable blade, cut and level the sealant for the windscreen housing leaving a thickness of between 0.25 and 1 mm without reaching the paint and therefore not scratching it.

NOTE *The film of sealant remaining on the windscreen housing will be a support for the subsequent bonding.*

- After the operation of levelling the sealant, thoroughly clean the window housing with compressed air and degrease fully with heptane.

Preparing the windscreen

3. If the window which has been removed is being reused: using a suitable blade, cut and level the sealant trying to reduce the thickness to a minimum. It is not necessary to cut the sealant completely.
   Avoid touching the surface of the sealant which remains. Take care not to damage the black serigraphy on the perimeter of the window.

- Degrease the serigraphed area of the windscreen with heptane.

4. Using the wad supplied with the kit, apply the adhesion promoter (primer) for glass to the serigraphed area. It is not necessary to apply the product on the sealant which remains.

- Wait for 15 minutes before proceeding with the opeations in order to allow the adhesion promoter (primer) diluent to evaporate.

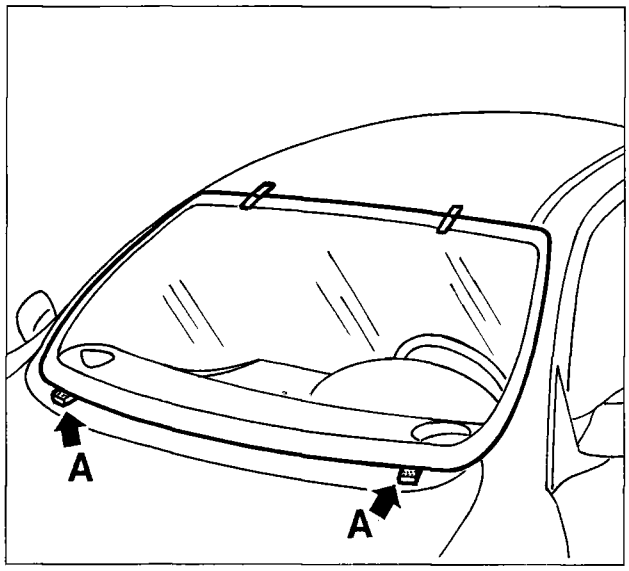

P4F081M01

Refitting

- Fit the trim on the windscreen, avoiding touching the area where the adhesion promoter (primer) has been applied with your hands.
- Carry out a test fitting to centre the windscreen perfectly and apply the reference marks.

The sliding retaining mountings (A) located in the lower part should support the windscreen upwards and keep it aligned with the roof.

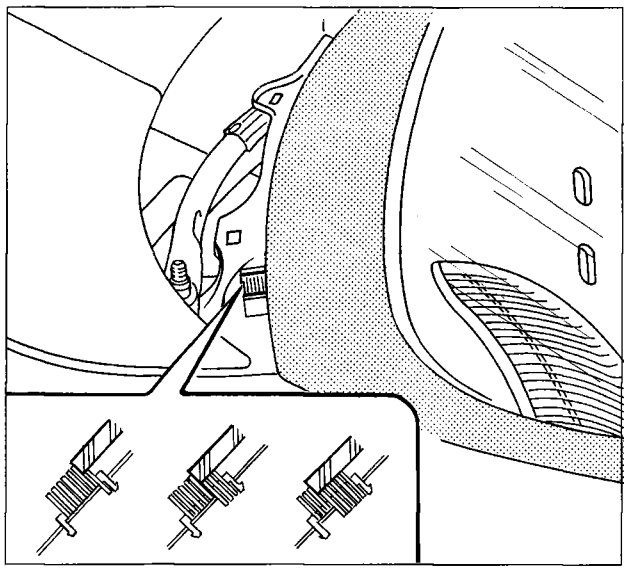

P4F23AM02

- Using a pneumatic spray gun, apply sealant along the perimeter of the windscreen as evenly as possible (in the case of uneveness, level with a slice of potato).

Apply the sealant to the lower part of the windscreen scrupulously following the figures given in the drawing, to prevent it from ending up on the retaining mountings.

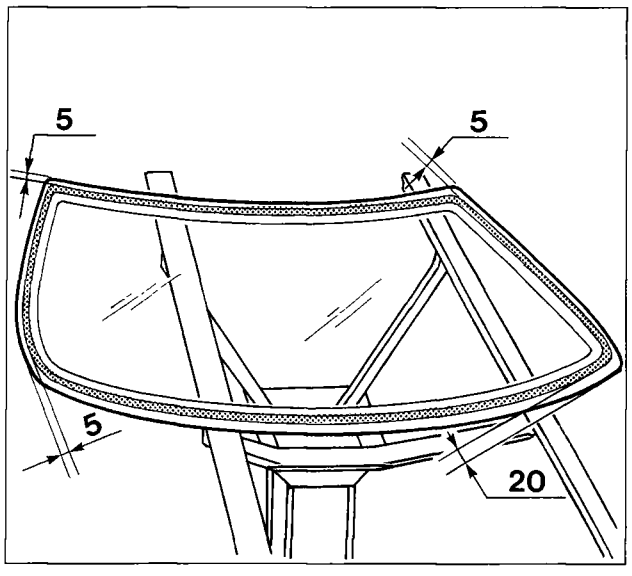

P4F23AM03

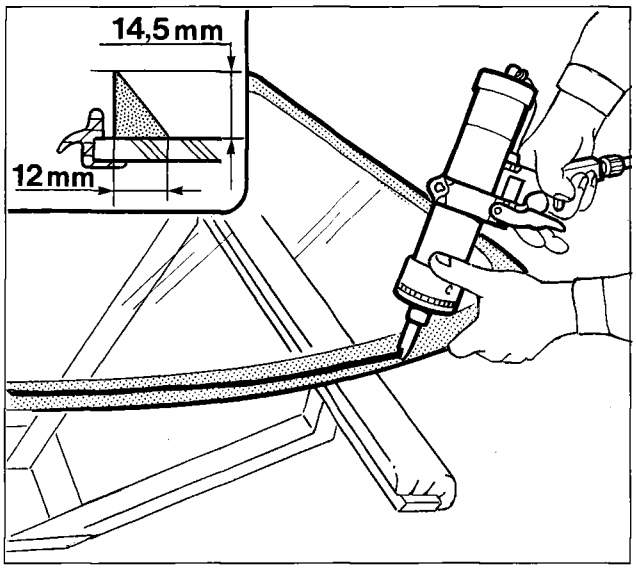

P4F23AM04

70.

- Using the special suction pads, place the windscreen in position immediately after applying the sealant.
- Using suitable belts and shims, exert slight pressure on the window so that the trim is correctly aligned with the pillars.

Keep the window under pressure for at least 1 hour. During this period it is possible to spray water over the window to identify any penetration points and accelerate the polymerization of the sealant.

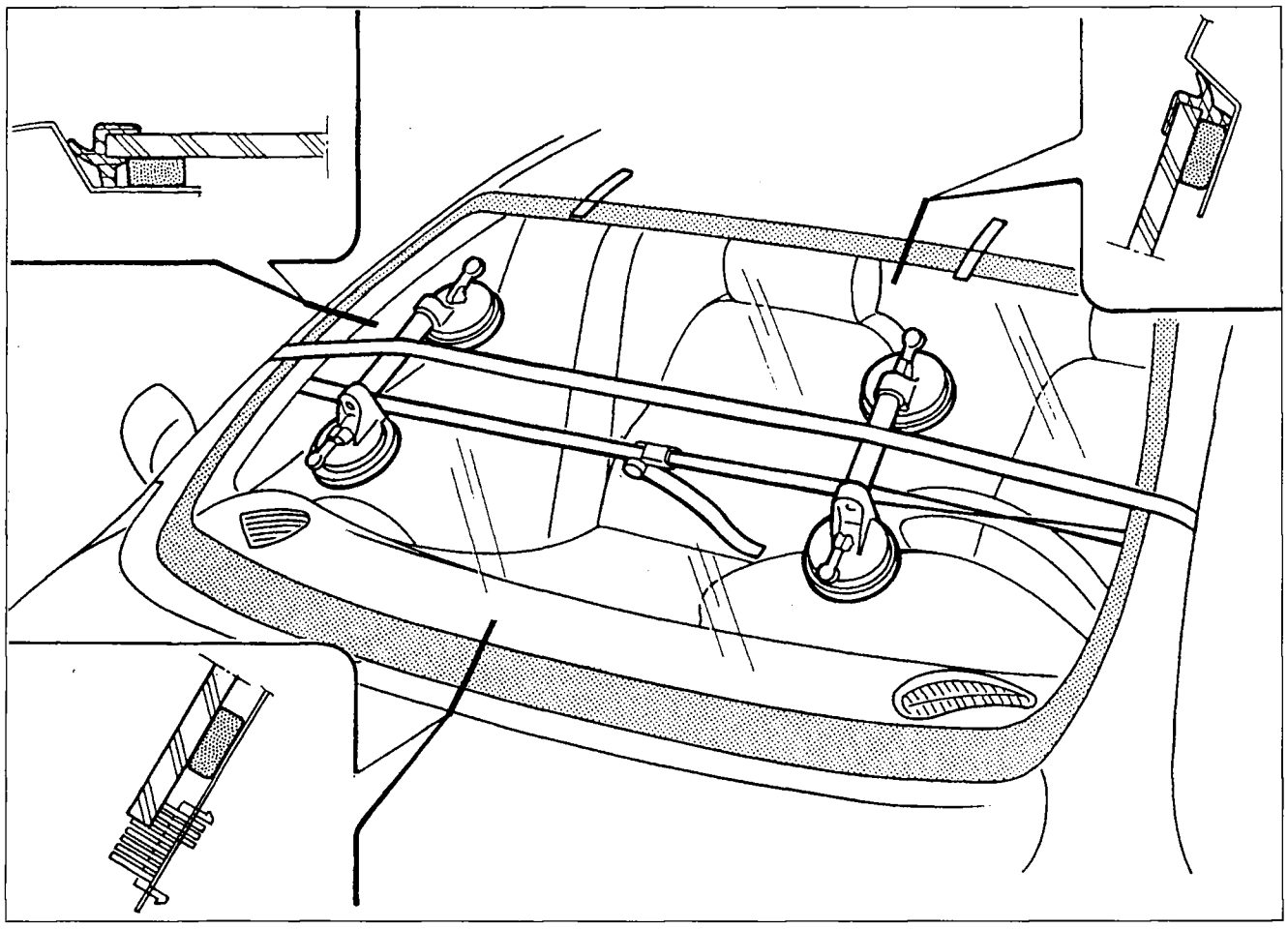

P4F24AM01

- Any excess sealant on the inside of the pillars can be removed when the sealant has hardened by cutting it with a blade and removing it with pliers.

Take care not to damage the serigraphed area of the glass with the blade.

- Refit the components removed previously and clean the window.

The vehicle should not be handed back for at least 6 hours after bonding the windscreen.

REPLACING THE REAR WINDOW GLASS (REARSCREEN)

Dismantling and protecting the vehicle

Remove the parts shown in the diagram: see the specific paragraphs for the removal procedures. The parts are numbered in order of dismantling.

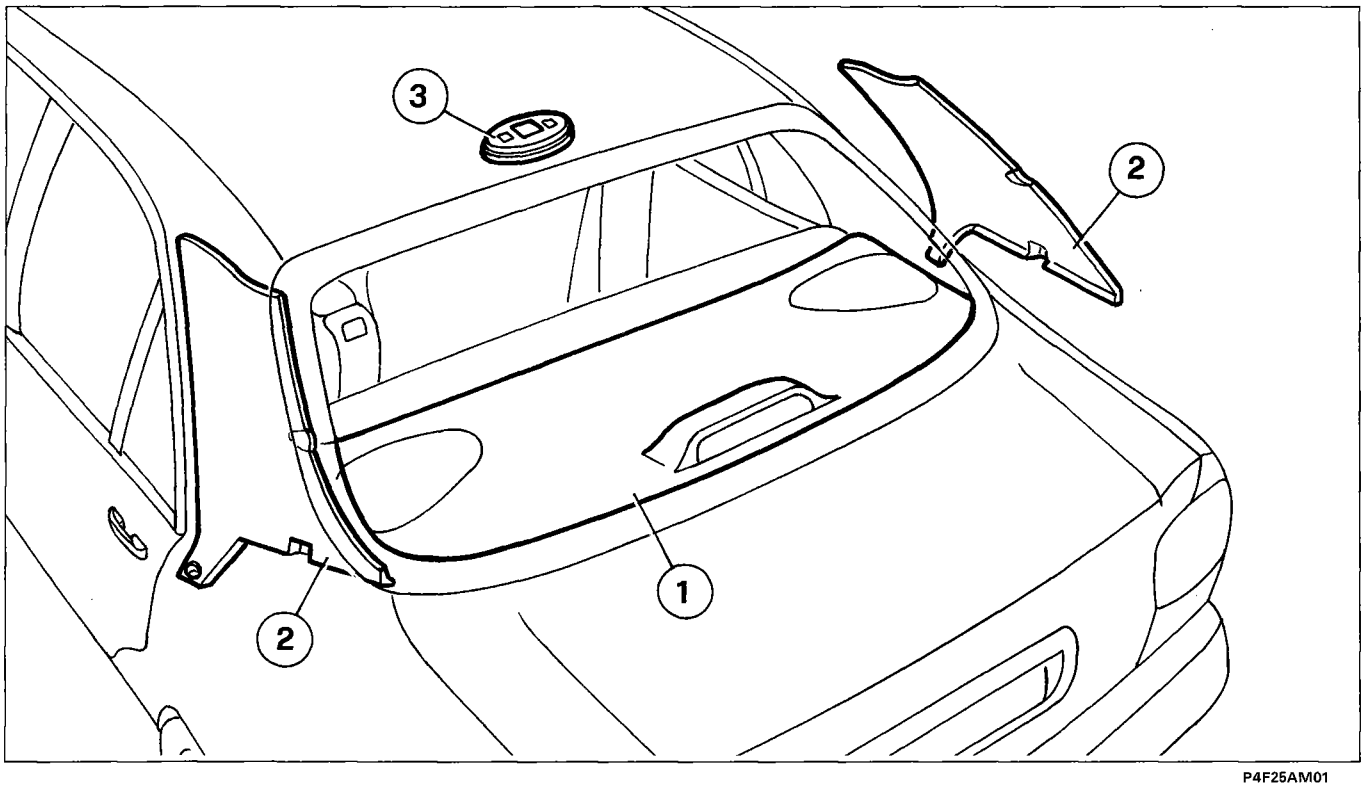

P4F25AM01

1. Rear parcel shelf
2. Rear pillar covers
3. Rear courtesy light

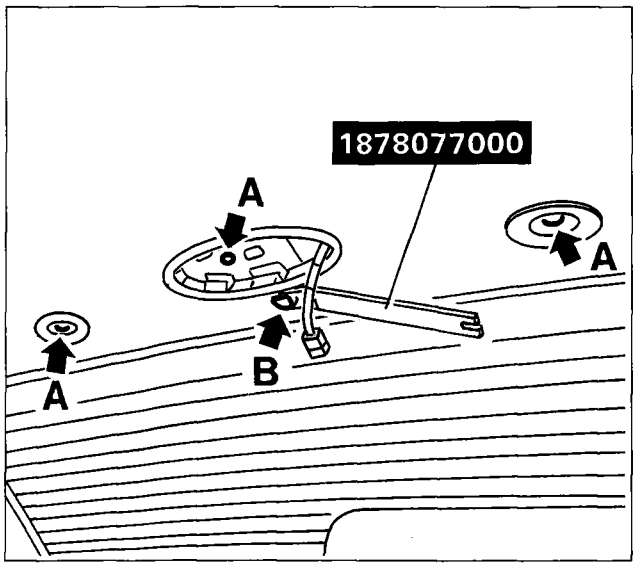

- Undo the bolts (A) at the rear of the roof lining and remove the retaining button (B), then lower the lining to facilitate the operation of removing the rearscreen.
- Disconnect the electrical connections for the heated rear windscreen.
- Protect the perimeter of the rearscreen housing with adhesive tape.
- Protect the internal parts of the vehicle with a suitable cloth or paper.

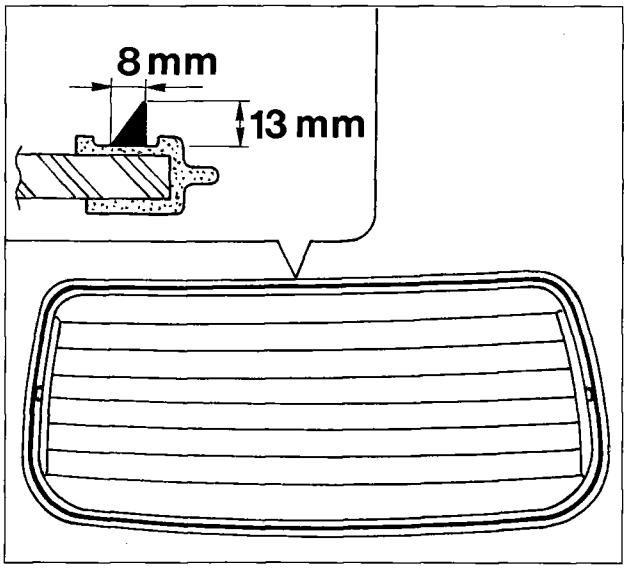

P4F26AM01

NOTE *As far as the removal of the window and the preparation of the housing and the actual glass is concerned, refer to the instructions given for the windscreen (see previous pages).*

Take care NOT TO DAMAGE the seal in case the window is reused.

NOTE *If a NEW WINDOW is being used, carry out a test pre-fitting to check the alignments.*

- Apply the sealant directly to the inner edge of the seal, which is the pressed type (see diagram at the side).
- Refit the window, in the same way as described for the windscreen, referring to the diagram below.

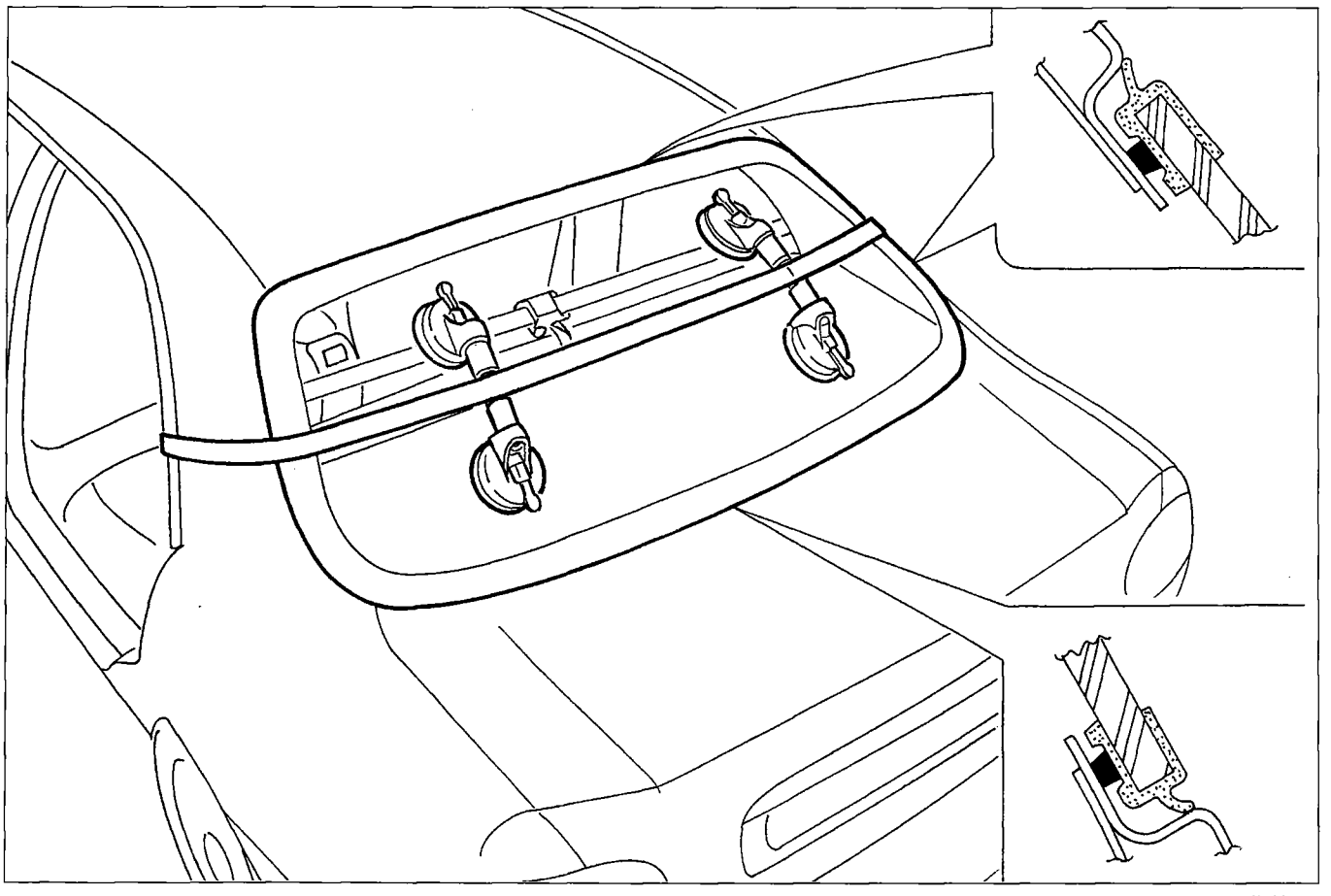

P4F084M01

REPLACING THE REAR WINDOW GLASS (REARSCREEN)

Dismantling and protecting the vehicle

Remove the parts shown in the diagram: see the specific paragraphs for the removal procedures. The parts are numbered in order of dismantling.

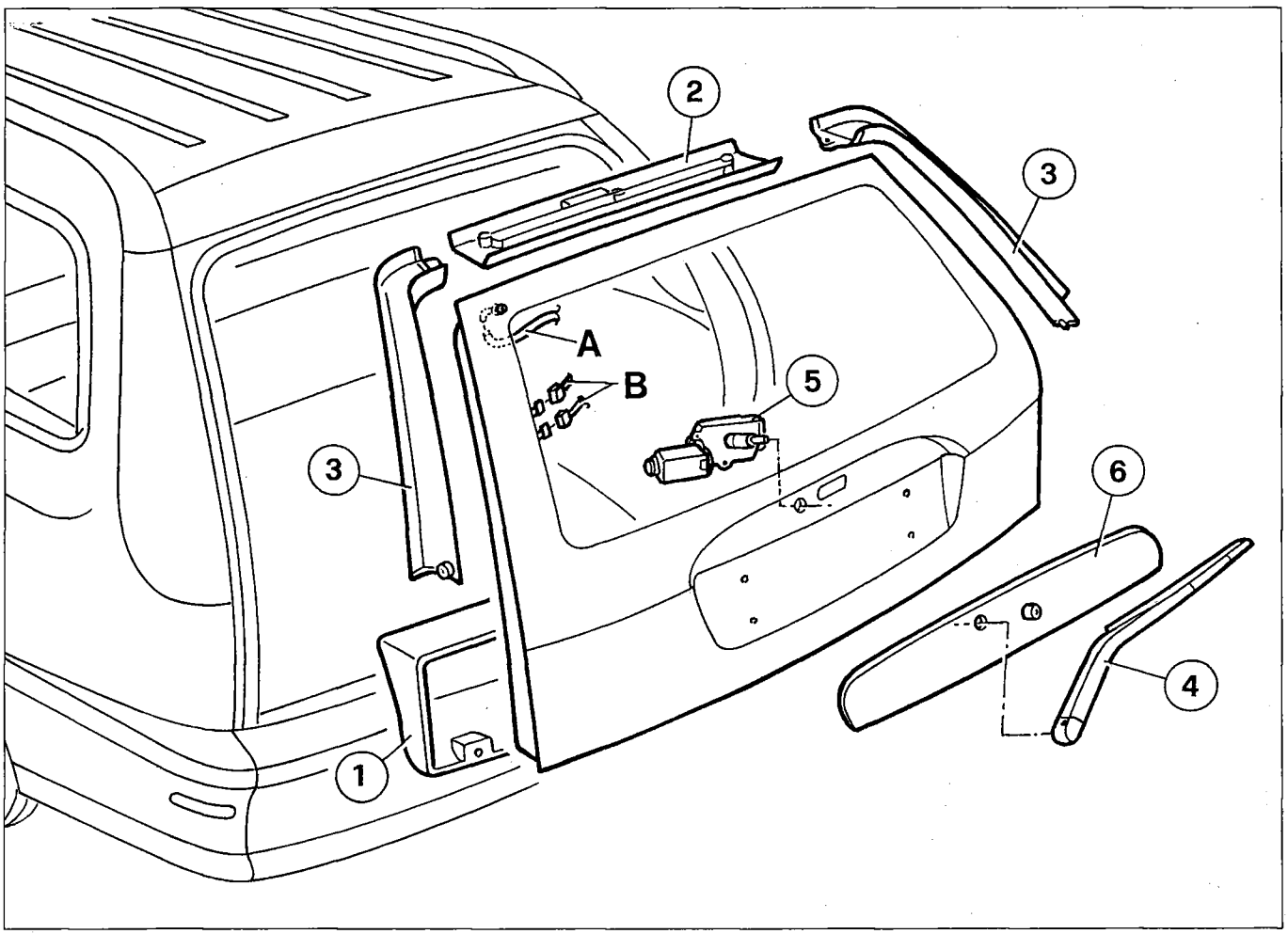

P4F27AM01

1. Lower panel
2. Upper panel
3. Side panel
4. Rearscreen wiper blade
5. Rearscreen wiper motor
6. Number plate holder

- Disconnect the connection (A) for the rearscreen washer pipe.
- Disconnect the two connectors (B) for the heated rear windscreen.

- Protect the perimeter of the rearscreen housing with adhesive tape.
- Protect the internal parts of the vehicle with a suitable cloth or paper.

Copyright by Fiat Auto

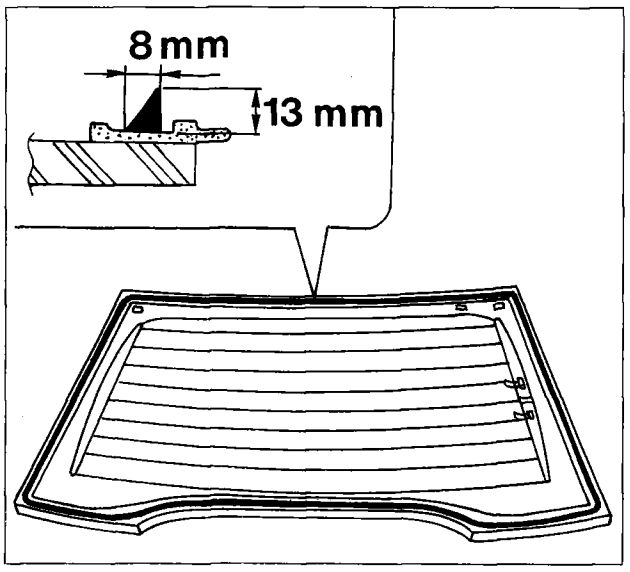

P4F28AM01

NOTE *As far as the removal of the window and the preparation of the housing and the actual window glass are concerned, refer to to the instructions given for the windscreen (see previous pages).*
Take care NOT TO DAMAGE the pressed seal if the window glass is being reused.

NOTE *If a NEW WINDOW GLASS is being used, carry out a test pre-fitting to check the alignments.*

- Apply the sealant directly to the internal edge of the seal, which is the pressed type (see diagram at the side).
- Refit the window glass, in the same way as for the windscreen, referring to the diagram below.

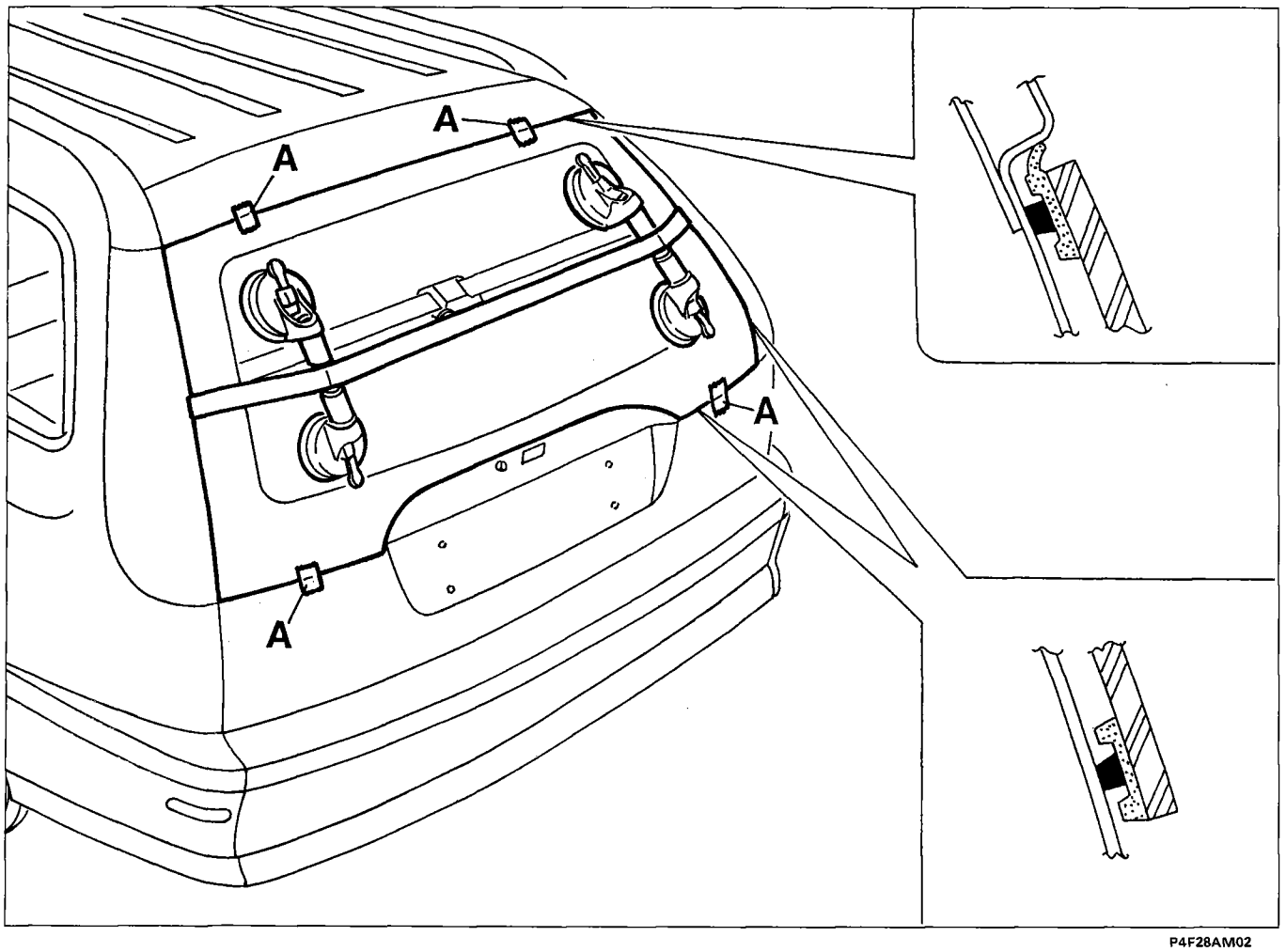

P4F28AM02

REPLACING THE REAR SIDE FIXED WINDOW

Dismantling and protecting the vehicle

Remove the parts shown in the diagram: see the specific paragraphs for the removal operations. The parts are numbered in order of dismantling.

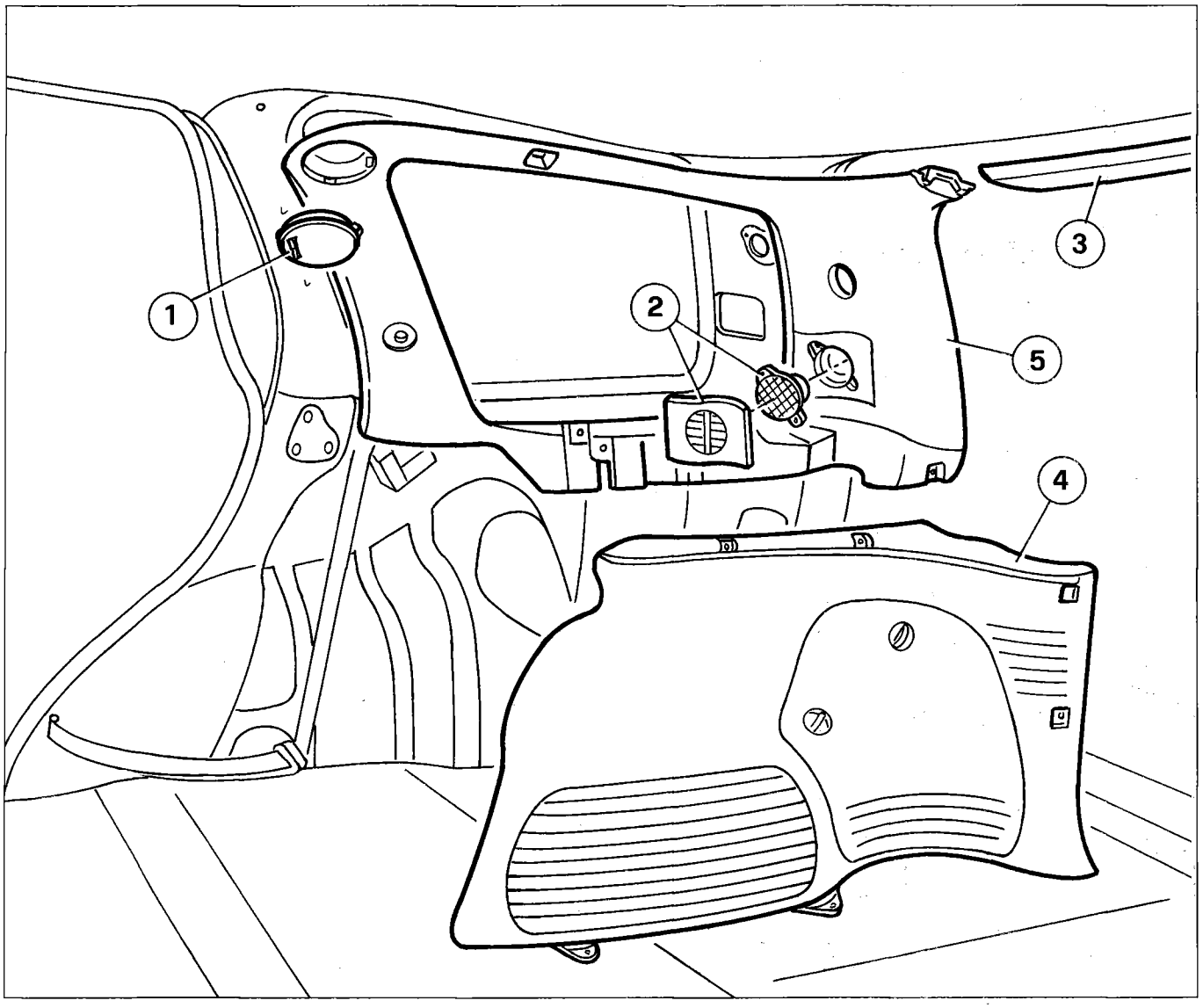

P4F29AM01

1. Side courtesy light
2. Rear speakers
3. Luggage compartment upper covering
4. Luggage compartment side lining
5. Luggage compartment pillars cover

- Protect the perimeter of the third window housing with adhesive tape.
- Protect the internal carpets with a suitable cloth or paper.

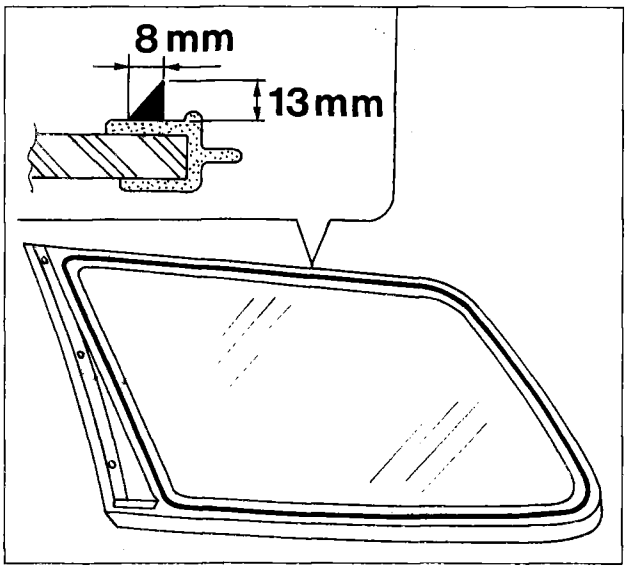

P4F30AM01

NOTE *As far as the removal of the window and the preparation of the housing and the actual window are concerned, refer to to the instructions given for the windscreen (vedere previous pages).*

Take care NOT TO DAMAGE the pressed seal if the window is being reused.

NOTE *If a NEW WINDOW is being used, carry out a test pre-fitting to check the alignments.*

- Apply the sealant directly to the internal edge of the seal, which is the pressed type (see diagram at the side).
- Refit the window, in the same way as described for the windscreen, referring to the diagram below.

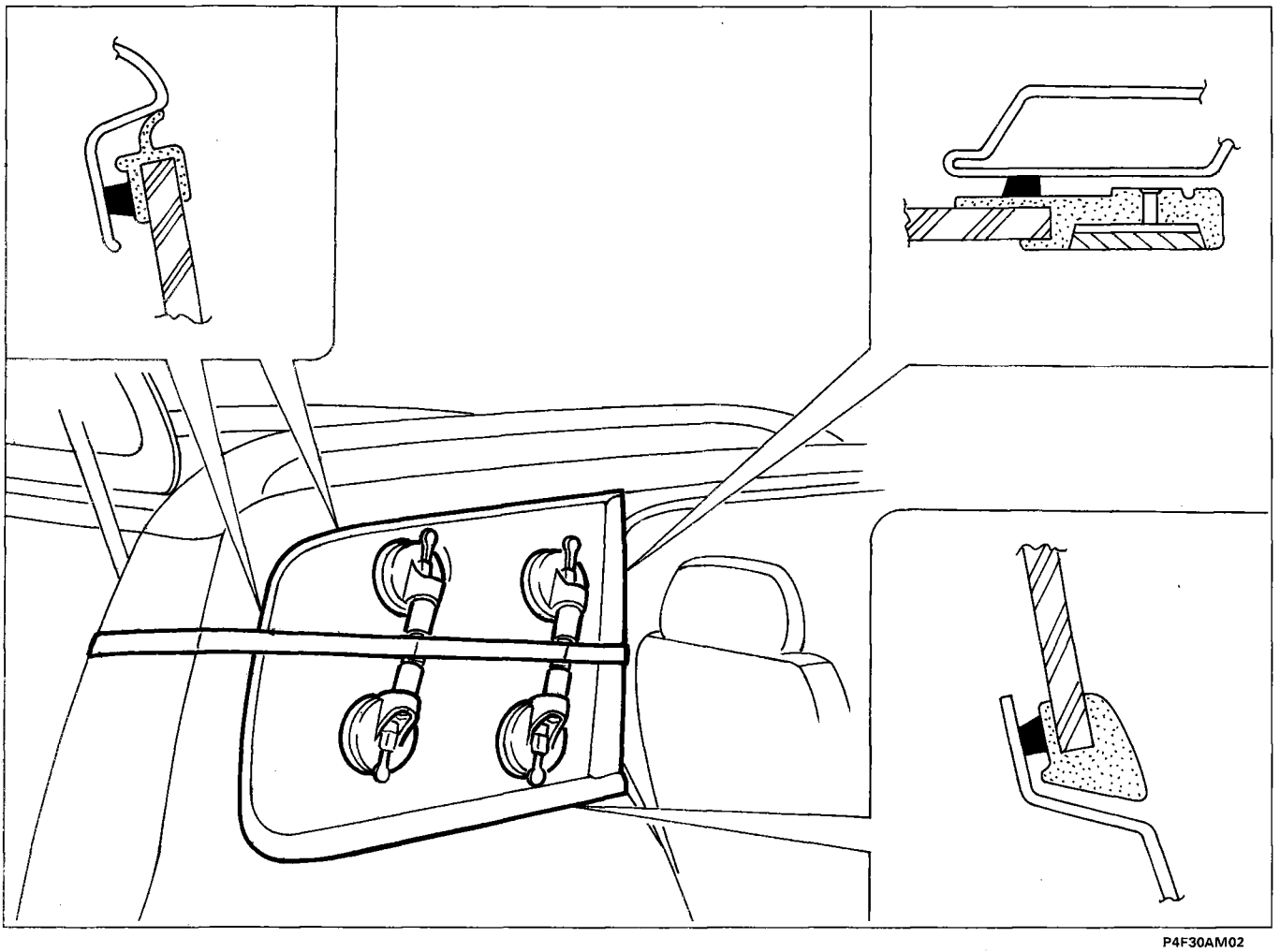

P4F30AM02